SIZE	CODE	NUMBER	REV
B	DD	MDECS-AA	A

DRAWING NO.	NO. OF SHTS.	PART NO.	DESCRIPTION	REVISIONS
B-TC-MDECS-AA-1	-	MP01484	FIELD MAINTENANCE PRINT SET	REF
		MDECS-AA	256K x 22 MOS MEMORY SYSTEM	A
		M8743-AA	MDECS-AA MEMORY	A
B-DD-M8743-AA	1		MDECS-AA MEMORY	A
D-BD-MDECS-AA-DBU	1		MDECS-AA BLOCK DIAGRAM	A
D-TD-MDECS-AA-DBU	6		MDECS-AA TIMING DIAGRAM	A
E-FD-MDECS-AA-3	1		MDECS-AA FLOW DIAGRAM	A
A-SP-MDECS-AA-2	29		MDECS-AA SPECIFICATION	A

NOTES:

REVISION HISTORY		
DATE	ECO NO.	REV.
-	INIT.	A

digital

USED ON OPTION/MODEL
DECSA-A

DRN.	L PETERSON	DATE 7/21/82
CHK'D	James P. Janetos	DATE 7/21/82
DES. ENG.	James P. Janetos J JANETOS	DATE 7/21/82
RESP. ENG.	James P. Janetos J JANETOS	DATE 7/21/82
MFG. ENG.	R. Hill RON HILL	DATE 7/21/82

TITLE: MDECS-AA 256 x 22 MOS MEMORY SYS

DOCUMENT NUMBER

SIZE	CODE	NUMBER	REV.
B	DD	MDECS-AA	A

SHEET 1 OF 1

DRB 126A

ML2

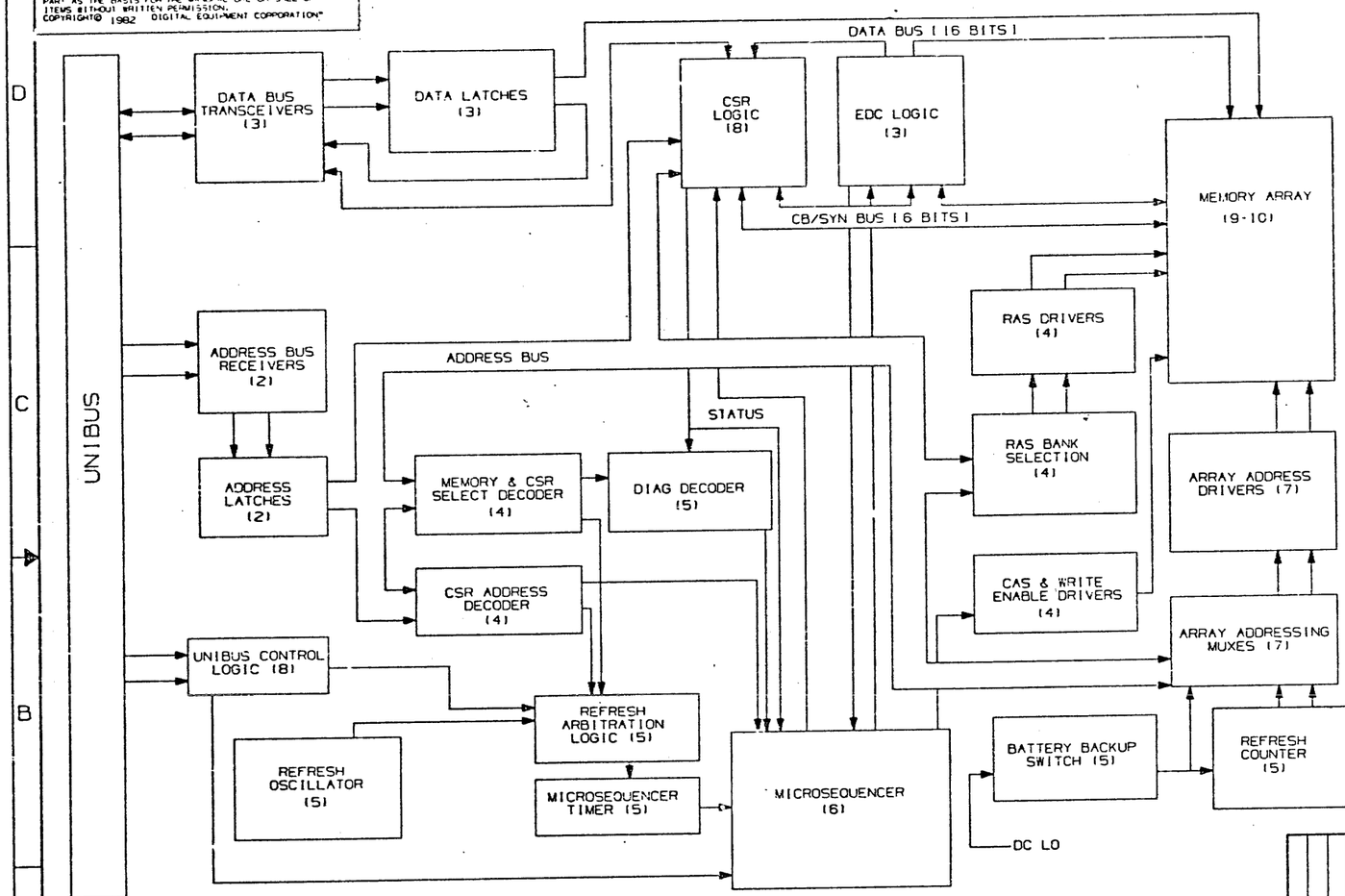

NOTES:

1. NUMBERS IN PARENTHESES ARE SCHEMATIC PAGE NUMBERS.

DESCRIPTION	DRAWING NO.	PART NO.	ITEM NO.

UNLESS OTHERWISE SPECIFIED DIMENSIONS ARE IN INCHES AND THE FOLLOWING TOLERANCES APPLY (PER DEC STD 1141)

INCHES TOLERANCES	ANGLES ±0° 30'	APPLICABLE DIMENSION RANGE (CHECK ONE)	DIMENSION RANGE IN INCHES					
			OVER 0 TO 0.3	OVER 0.3 TO 1.2	OVER 1.2 TO 4.0	OVER 4.0 TO 12.0	OVER 12.0 TO 40.0	OVER 40.0 TO 80.0
.X= ± .1	SURFACE QUALITY	☐	±.02		±.03	±.05	±.10	
.XX= ± .02	✓	☐	±.004	±.008	±.012	±.016	±.024	±.04
.XXX= ± .005	N (MICROINCHES)	☐						

FIRST HIGHER ASSY

QUANTITY & VARIATION

THIRD ANGLE PROJECTION

DO NOT SCALE DRAWING

REMOVE BURRS AND BREAK SHARP CORNERS

MATERIAL

FINISH

		DATE
DRN	G.C.MACKENZIE	9/22/82
CHK'D	J.JANETOS	9/22/82
DES. ENG.	J.JANETOS	9/22/82
RESP. ENG.	J.JANETOS	9/22/82
MFG. ENG.	P.HILL	9/22/82
TOP DOC.		

TITLE

digital

MDECS-AA
BLOCK DIAGRAM

DOCUMENT NUMBER

SIZE	CODE	NUMBER	REV.
D	60	MDECS-AA-DBU	A

SCALE 1/1 SHEET 1 OF 1

REVISIONS			
CHK	CHANGE NO.	REV.	
	ORIGINATED	A	

SYSTEM	NAME	REV.
D 30	MDECS-AA-DBU	A

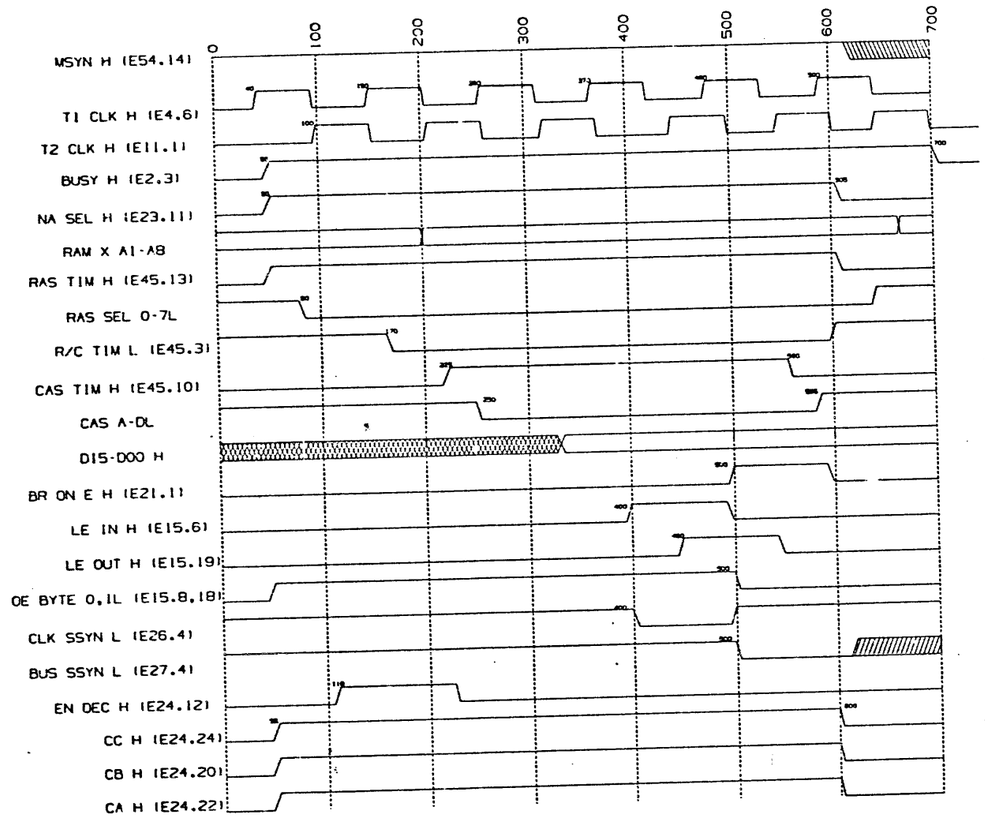

(DATI, TIMING)

REVISIONS		
CHG	CHANGE NO.	REV.
	ORIGINATED	A

DESCRIPTION	DRAWING NO.	PART NO.	ITEM NO.
UNLESS OTHERWISE SPECIFIED DIMENSIONS ARE IN INCHES AND THE FOLLOWING TOLERANCES APPLY (PER DEC STD 114)			

INCHES TOLERANCES	ANGLES ±0° 30'	APPLICABLE DIMENSION RANGE	DIMENSION RANGE IN INCHES					
			OVER 0.0 TO 0.2	OVER 0.2 TO 1.2	OVER 1.2 TO 3.0	OVER 3.0 TO 12.0	OVER 12.0 TO 40.0	OVER 40.0 TO 80.0
.X= ± .1	SURFACE QUALITY	HONED ONLY	±.002					
.XX= ± .02				±.01	±.05	±.10		
.XXX= ± .005		MICRO-INCHES	±.004	±.008	±.012	.015	.024	±.04

QUANTITY & VARIATION

FIRST NUMBER USED

THIRD ANGLE PROJECTION

DO NOT SCALE DRAWING

REMOVE BURRS AND BREAK SHARP CORNERS

MATERIAL

FINISH

		DATE
DRN	C.R.FIELD	9/8/82
CHK'D	J.JANETOS	9/8/82
DES. ENG.	J.JANETOS	9/8/82
REQ. ENG.	J.JANETOS	9/8/82
MFG. ENG.	R. HILL	9/8/82
TOP DOC.		

digital

TITLE
MEMORY SYSTEM TIMING

DOCUMENT NUMBER

SIZE	CODE	NUMBER	REV.
D	TD	MDECS-AA-DBU	A

SCALE NONE SHEET 1 OF 6

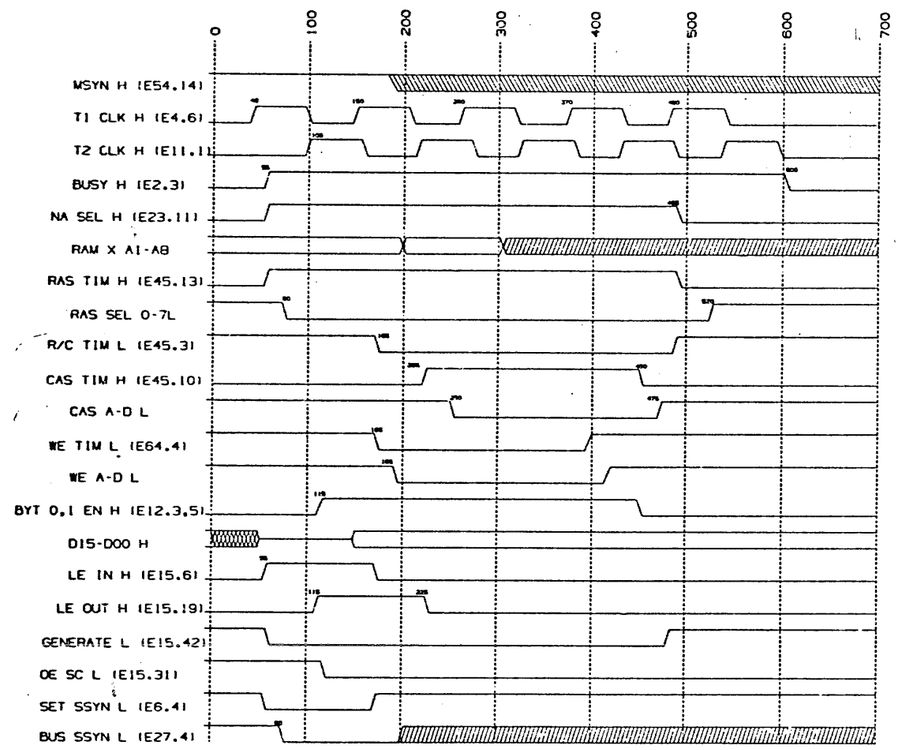

(DATO TIMING)

REVISIONS		
CHK	CHANGE NO	REV

TITLE	SIZE	CODE	NUMBER	REV
MEMORY SYSTEM TIMING	D	TD	MDECS-AA-DBU	A
SCALE NONE	SHEET 2 OF 6		DIST	

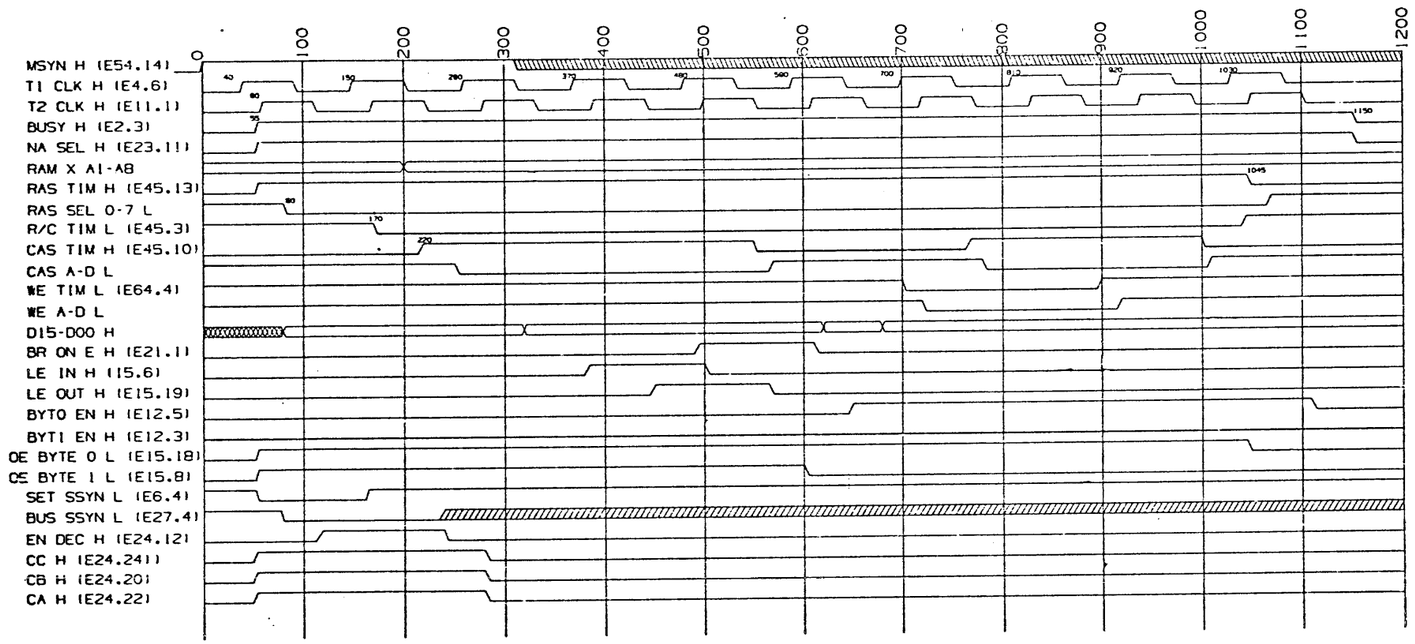

(DATOB TIMING)

REVISIONS		
CHK	CHANGE NO	REV

TITLE MEMORY SYSTEM TIMING		SIZE D / CODE TD	NUMBER MDECS-AA-DBU / REV A
SCALE NONE	SHEET 3 OF 6	DIST	

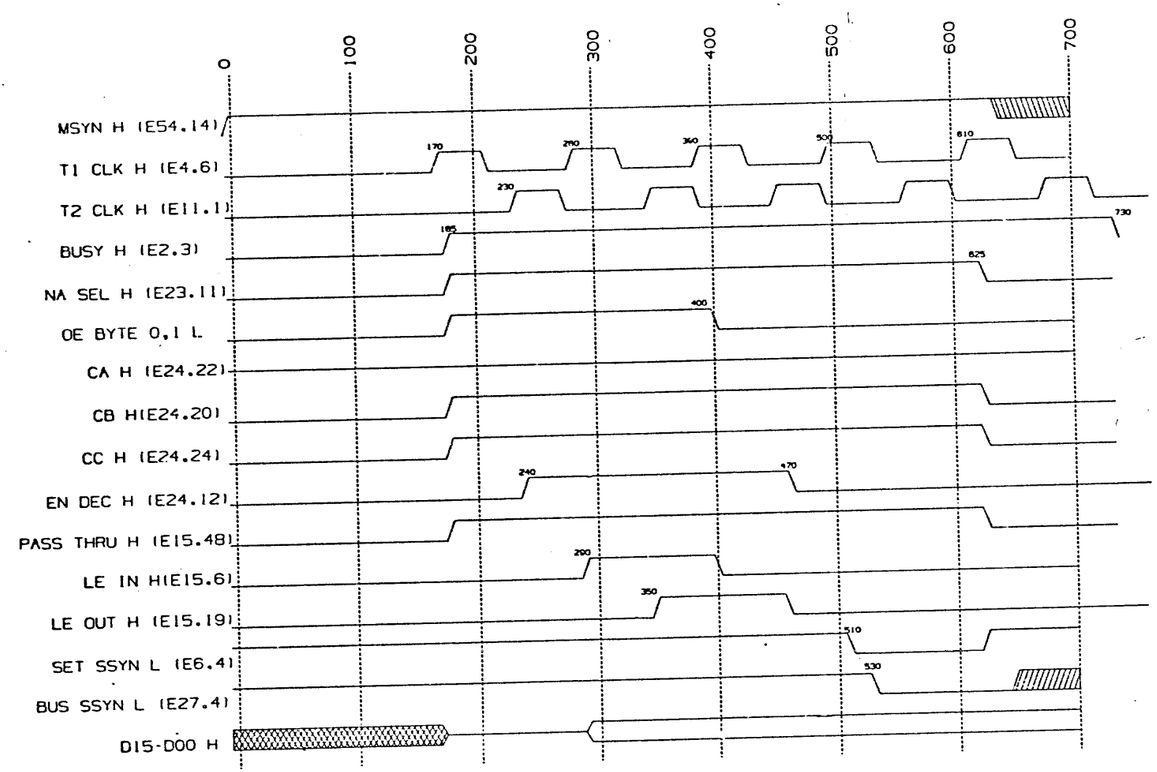

(DATI, CSR)

REVISIONS		
DWG	CHANGE NO	REV

TITLE	SIZE	CODE	NUMBER	REV
MEMORY SYSTEM TIMING	D	TD	MDECS-AA-DBU	A

SCALE NONE SHEET 4 OF 6 DIST

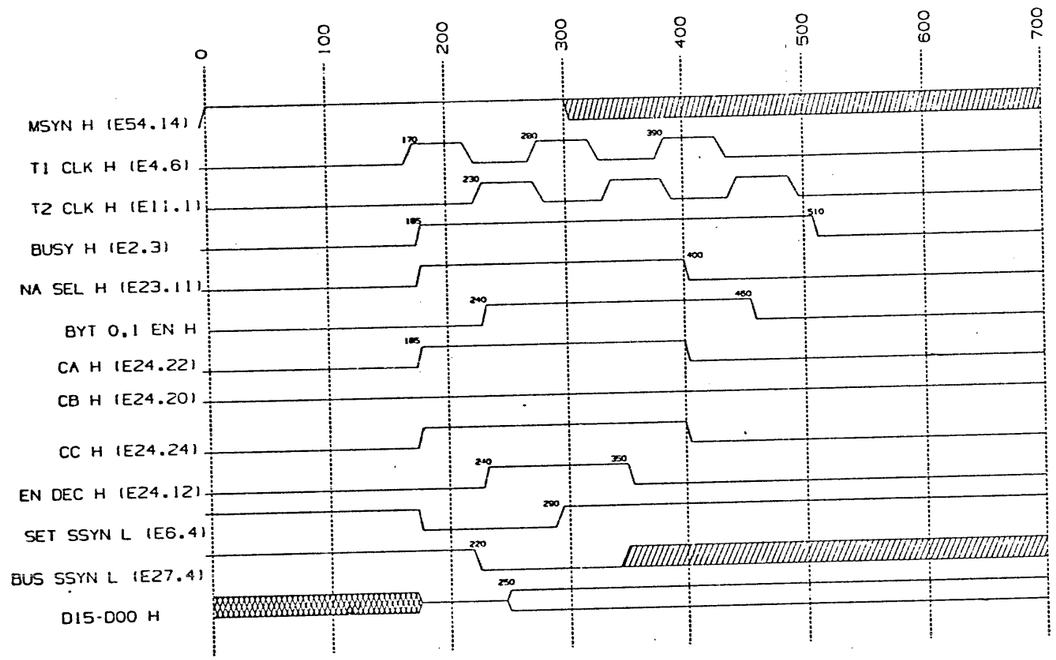

(DATO, CSR)

REVISIONS		
CHK	CHANGE NO	REV

TITLE MEMORY SYSTEM TIMING	SIZE D	CODE TD	NUMBER MDECS-AA-DBU
SCALE NONE	SHEET 5 OF 6	DIST	REV A

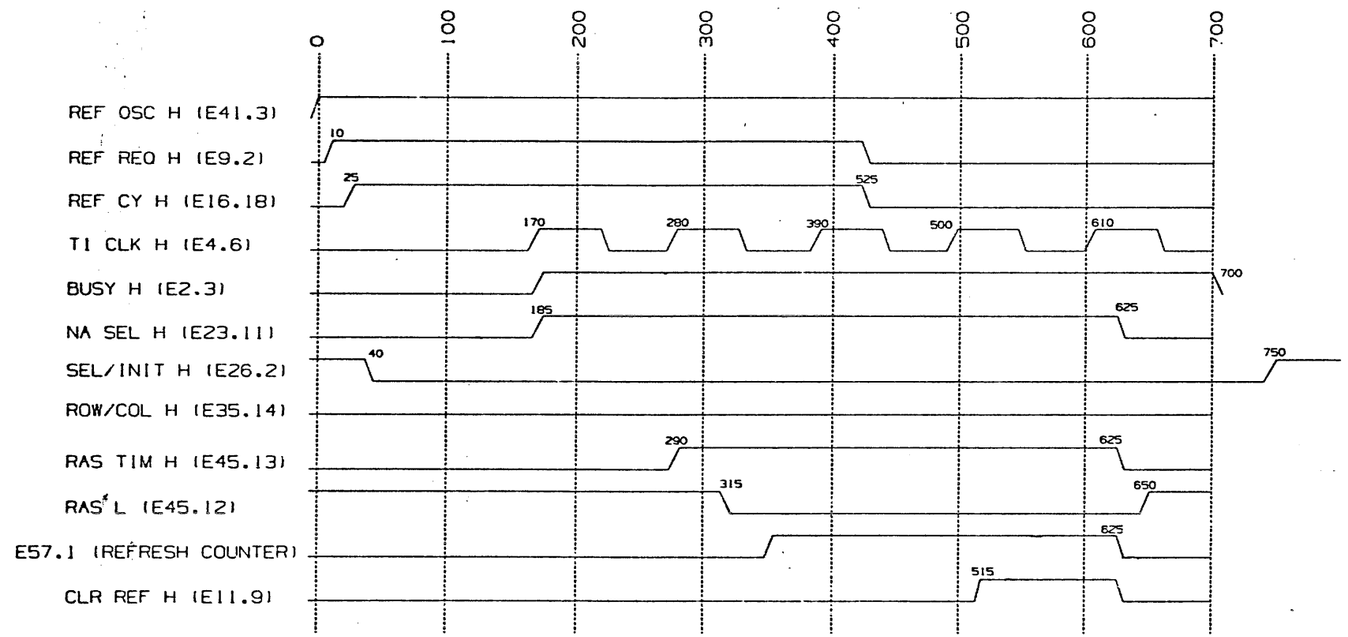

(REFRESH TIMING)

REVISIONS		
CHK	CHANGE NO	REV

TITLE	SIZE	CODE	NUMBER	REV
MEMORY SYSTEM TIMING	D	TD	MDECS-AA-DBU	A
SCALE NONE	SHEET 6 OF 6	DIST		

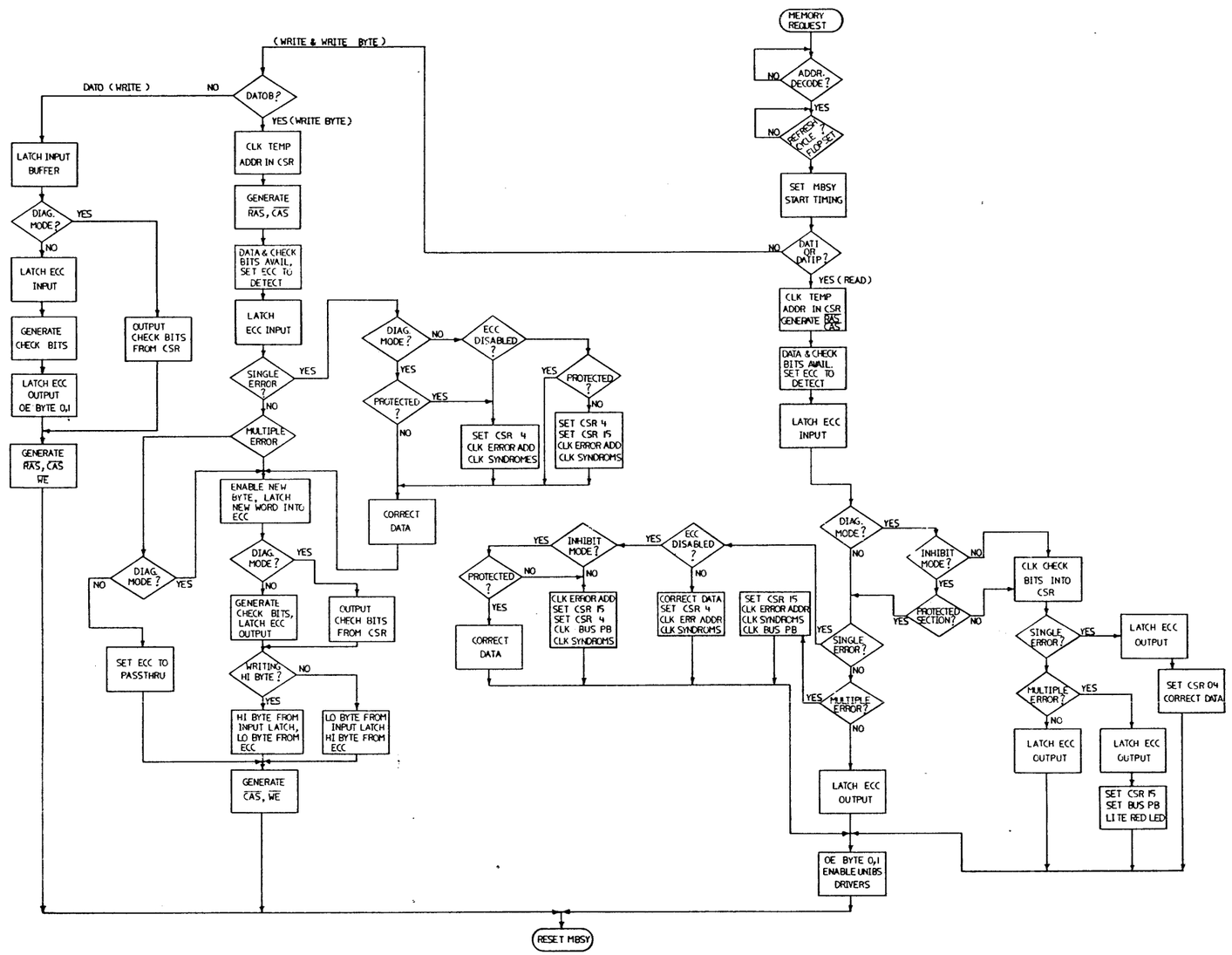

DESCRIPTION	DRAWING NO.	PART NO.	ITEM NO.

UNLESS OTHERWISE SPECIFIED DIMENSIONS ARE IN INCHES AND THE FOLLOWING TOLERANCES APPLY (PER DEC STD 114)

INCHES TOLERANCES	ANGLES ± 0° 30'	APPLICABLE DIMENSION RANGE (CHECK ONE)	DIMENSION RANGE IN INCHES					
	SURFACE QUALITY		OVER 0 TO 0.2	OVER 0.2 TO 1.2	OVER 1.2 TO 4.0	OVER 4.0 TO 12.0	OVER 12.0 TO 48.0	OVER 48.0 TO 96.0
X = ± .1		☐		± .02		± .03		± .10
XX = ± .02		☐	± .004	± .005	± .012	± .016	± .024	± .04
XXX = ± .005	MICROINCHES	☐						

QUANTITY & VARIATION

THIRD ANGLE PROJECTION

DO NOT SCALE DRAWING

REMOVE BURRS AND BREAK SHARP CORNERS

MATERIAL

FINISH

		DATE
DRN	T. L. MANN	9 SEPT 82
CHK'D	J. VANETOS	23 SEPT 82
DSG ENG	J. VANETOS	23 SEPT 82
PROJ ENG	J. VANETOS	23 SEPT 82
MFG ENG	R. HILL	23 SEPT 82

TYP SRC. NO.

TITLE: FLOW DIAGRAM

digital

DOCUMENT NUMBER

SIZE	CODE	NUMBER	REV
E	FD	MDECS-AA-3	A

SCALE — SHEET 1 OF 1

REV	REVISION HISTORY	DATE
A	ORIGINATED	

MDECS-AA-3 REV A

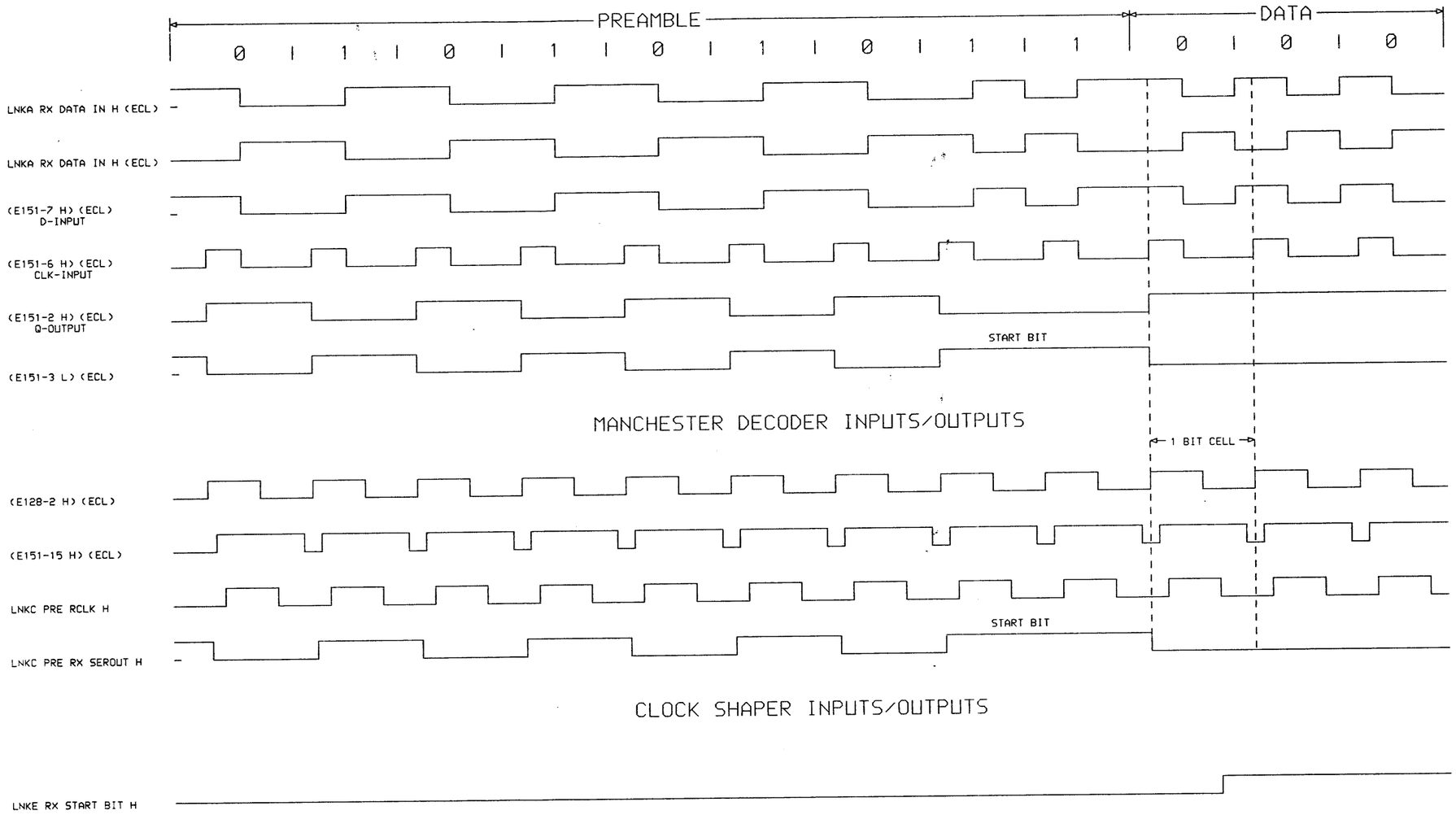

RECEIVE DATA DECODE AND CLOCK GENERATOR-LNKC
TIMING DIAGRAM-2

REVISIONS		
CHK	CHANGE NO.	REV

digital	DRN. G.M.HAFNER	DATE 17-NOV-82	ENG. Neil Bloomberg	DATE 17-NOV-82
	CHK: D. Sargent	DATE 17-NOV-82	BOARD LOCATION: SHEET 1 OF 1	
DSKD:<SARGENT>LNKTDB.DRW	17-NOV-82 1:02		NEXT HIGHER ASSEMBLY: D-UA-M7793-0-0	
FIRST USED ON OPTION/MODEL: DELNA				

TITLE: DELNA LINK MODULE (LNK)

SIZE	CODE	NUMBER	REV.
K	TD	M7793-0-TDB	A

FIELD MAINTENANCE PRINT SET

TABLE OF CONTENTS

UNIT VARIATIONS COVERED BY THIS PRINT SET

DEUNA-AA
DEUNA-KP
DEUNA-M

DEUNA

FIELD MAINTENANCE PRINT SET

DIGITAL EQUIPMENT CORPORATION

PRINT SET ORDER NO.

MPØ1378 REV A1

REVISION HISTORY

REV	ECO NUMBER	DATE
A	INITIAL	
B	DEUNA-MKØØ2	Ø8 MAR 85

CONT. REVISION HISTORY

REV	ECO NUMBER	DATE

MADE BY: R. J. RILEY
DATE: 1Ø JAN 83

27-MAR 85

CHECKED BY: R. J. RILEY
DATE: 1Ø JAN 83

PROJECT ENGR: M. STECKLAIR
DATE: 1Ø JAN 83 27 Mar 85

RSPBLE ENGR: M. STECKLAIR
DATE: 1Ø JAN 83 27 Mar 85

FIELD SERVICE: D. DUNCAN
DATE: 1Ø JAN 83

d i g i t a l

TITLE: FIELD MAINTENANCE PRINT SET

DEUNA

SIZE	CODE	DOCUMENT NUMBER	REV.
K	TC	DEUNA-Ø-1	B

SHEET 1 OF 4 MKO

FIELD MAINTENANCE PRINT SET

TABLE OF CONTENTS - CONTINUED

REVISION HISTORY			CONT. REVISION HISTORY		
REV	ECO NUMBER	DATE	REV	ECO NUMBER	DATE

MADE BY:
DATE:

CHECKED BY:
DATE:

PROJECT ENGR:
DATE:

RSPBLE ENGR:
DATE:

FIELD SERVICE:
DATE:

d i g i t a l

TITLE: FIELD MAINTENANCE PRINT SET

DEUNA

SIZE	CODE	DOCUMENT NUMBER	REV.
K	TC	DEUNA-0-1	B

SHEET 2 OF 4 MKO

FIELD MAINTENANCE PRINT SET

TABLE OF CONTENTS CONTINUED

UNIT VARIATIONS COVERED BY THIS PRINT SET

DEUNA

FIELD MAINTENANCE PRINT SET

DIGITAL EQUIPMENT CORPORATION

PRINT SET ORDER NO.

MP01378

REVISION HISTORY			CONT. REVISION HISTORY		
REV	ECO NUMBER	DATE	REV	ECO NUMBER	DATE

MADE BY:
DATE:

CHECKED BY:
DATE:

PROJECT ENGR:
DATE:

RSPBLE ENGR:
DATE:

FIELD SERVICE:
DATE:

d i g i t a l

TITLE: FIELD MAINTENANCE PRINT SET

DEUNA

SIZE	CODE	DOCUMENT NUMBER	REV.
K	TC	DEUNA-0-1	B

SHEET 3 OF 4 MKO

FIELD MAINTENANCE PRINT SET

TABLE OF CONTENTS CONTINUED

UNIT VARIATIONS COVERED BY THIS PRINT SET

DEUNA

FIELD MAINTENANCE PRINT SET

DIGITAL EQUIPMENT CORPORATION

PRINT SET ORDER NO.

MPØ1378

REVISION HISTORY			CONT. REVISION HISTORY		
REV	ECO NUMBER	DATE	REV	ECO NUMBER	DATE

MADE BY:
DATE:

CHECKED BY:
DATE:

PROJECT ENGR:
DATE:

RSPBLE ENGR:
DATE:

FIELD SERVICE:
DATE:

d i g i t a l

TITLE: FIELD MAINTENANCE PRINT SET

DEUNA

SIZE	CODE	DOCUMENT NUMBER	REV.
K	TC	DEUNA-Ø-1	B

SHEET 4 OF 4 MKO

DRAWING DIRECTORY

FOR FIELD MAINTENANCE PRINT SET REFER TO K-TC-DEUNA-Ø-1

UNIT VARIATIONS

VARIATION	TITLE
DEUNA-AA	OPTION DEUNA
DEUNA-KP	SYSTEM INTEGRATED DEUNA
DEUNA-M	DEUNA MODULE SET

REVISION HISTORY			USED ON OPTION/MODEL
ENG	ECO NUMBER	REV	
MS	DEUNA-TWØØ1	B	DEUNA-AA,-M,-KP,
ML	DEUNA-MKØØ2	C	

RESPONSIBLE ENGR. : P. GILDEA
DATE: 1Ø OCT 82 27 Mar 85

MADE BY : R. J. RILEY
DATE: 1Ø OCT 82 27 MAR 85

CHECKED BY : R. J. RILEY
DATE: 1Ø OCT 82

DESIGN ENGINEER : P. GILDEA
DATE: 1Ø OCT 82 27 Mar 85.

PRODUCTION ENGR. : D. DUNCAN
DATE: 1Ø OCT 82

d i g i t a l

TITLE: DRAWING DIRECTORY

OPTION, DEUNA

SIZE	CODE	DOCUMENT NUMBER	REV.
K	DD	DEUNA-Ø	C

SHEET 1 OF 2 MKO

FIND #	DRAWING NUMBER	DESCRIPTION	TYPE
1	E-UA-DEUNA-Ø	OPTION, DEUNA	M
	K-PL-DEUNA-Ø-DBP	PARTS LIST, OPTION, DEUNA	-
	D-IA-7427292-Ø-DBU	FRAME, I/O DOUBLE QUAD	-
	E-IA-7426403-Ø-DBU	FRAME, LOWER I/O	-
	K-TC-DEUNA-Ø-1	TABLE OF CONTENTS, DEUNA	-
2	B-DD-M7792-Ø	UNIBUS TO ETHERNET BUS MICROPROC.	E/M
3	B-DD-M7793-Ø	M7792 TO ETHERNET BUS LINE UNIT	E/M
4	D-AD-BCØ8R-Ø-Ø	I/O CABLE	
5	D-IA-7018798-Ø-Ø	UNA BULKHEAD CABLE ASSY	E
6	D-AD-7018799-Ø-Ø	UNA BULKHEAD ASSY	E/M
	D-IA-7426404-Ø-Ø	PANEL, QUAD	-
	K-PL-7426404-Ø-Ø	PARTS LIST, PANEL QUAD	-
	E-IA-7427750-Ø-Ø	PANEL, PLUTO BULKHEAD	-
7	B-IA-7018801-Ø-Ø	JUMPER WIRE ASSY	E
8	B-DD-5415552-Ø	UNA BULKHEAD	E

FIND #	DRAWING NUMBER	DESCRIPTION	TYPE

TYPE: E ELECTRICAL
M MECHANICAL
E/M ELECTRO/MECHANICAL

d i g i t a l

TITLE DRAWING DIRECTORY
OPTION, DEUNA

SIZE	CODE	DOCUMENT NUMBER	REV.
K	DD	DEUNA-Ø	C

SHEET 2 OF 2 MKO

NOTES:

1. WHEN MTG. OPTION IN FCC COMPLIANT CABINET, DISCARD ITEMS 7, 8 & 10.
2. INSTALLATION NOTE: THE NPR GRANT JUMPER (CAI TO CBI) MUST BE REMOVED BEFORE M7792 (ITEM 3) IS INSTALLED. THIS JUMPER MUST BE INSTALLED IF THE DEUNA IS REMOVED FROM SYSTEM.
3. THE BACKPLANE MODULE ORDER IS NOT FIXED.
4. POWER NOTE:
   +5 VDC @ 16A
   −15 VDC @ 1A

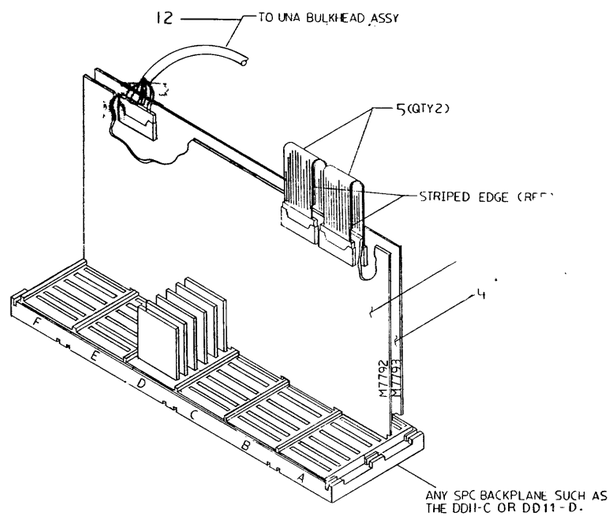

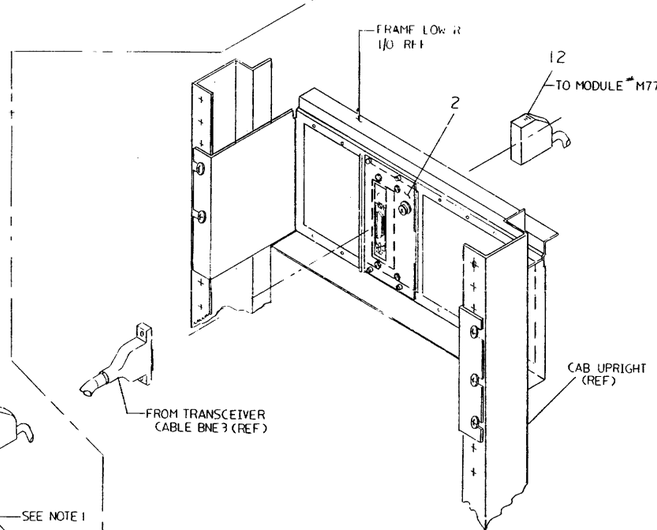

BULKHEAD ASSY. MOUNTING FOR FCC COMPLIANT CAB

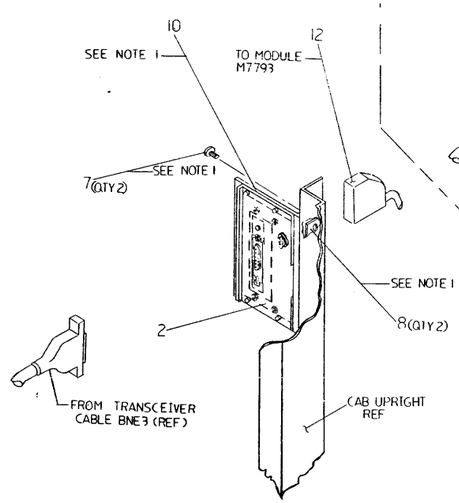

BULKHEAD ASSY. MOUNTING FOR FCC NON-COMPLIANT CAB.

CAUTION:
OFF SHEET PARTS LIST.
SEE K-PL-DEUNA-0-0

REVISION HISTORY			
DATE	ECO NUMBER		REV.
1/84	DEUNA-MK004		B
	M. LAWRENCE		

UNLESS OTHERWISE SPECIFIED DIMENSIONS ARE IN INCHES AND THE FOLLOWING TOLERANCES APPLY (PER DEC STD 114)

INCHES TOLERANCES	ANGLES ±0° 30'	APPLICABLE DIMENSIONAL RANGE (CHECK ONE)	OVER 0 TO 0.2	OVER 0.2 TO 1.2	OVER 1.2 TO 4.0	OVER 4.0 TO 12.0	OVER 12.0 TO 40.0	OVER 40.0 TO 80.0
X ± .1	SURFACE QUALITY		± .02	± .05	± .05	± .10	± .10	
XX ± .02			± .004	± .008	± .012	± .016	± .024	± .04
XXX ± .005								

DIMENSION RANGE IN INCHES

QUANTITY & VARIATION

DESCRIPTION	DRAWING NO.	PART NO.	ITEM NO.

THIRD ANGLE PROJECTION

DO NOT SCALE DRAWING

REMOVE BURRS AND BREAK SHARP CORNERS

MATERIAL

FINISH

		DATE
DRN	[illegible]	17-Jan-83
CHK	[illegible]	17-Jan-83
ENGR ENG	[illegible]	17-Feb-83
MGR ENG	[illegible]	17-Feb-83
MFG ENG	[illegible]	17-Feb-83
NEXT HIGHER ASSY	K-DD-DEUNA-0	

TITLE digital

OPTION DEUNA

DOCUMENT NUMBER

SIZE	CODE	NUMBER	REV
E	UA	DEUNA-0-0	B

SCALE NONE SHEET OF

MKO 1

AUTOMATED BY PRILST.5R(55)

P A R T S L I S T

LINE	ITEM	TOP DOCUMENT	PART NUMBER	MIN REV	DESCRIPTION	QTY PER VARIATION AA	M	KP
					VARIATION REVISION LEVEL:	A1	A1	A1
1	1	E-UA-DEUNA-0-0			OPTION DEUNA	REF	REF	REF
2	2	D-AD-7018799-0-0	7018799-00		UNA BULKHEAD ASSY.	1	REF	REF
3	3	D-UA-M7792-0-0	M7792-00		DEUNA PORT MODULE(UNIBUS TO ETHE	1	1	1
4	4	D-UA-M7793-0-0	M7793-00		DEUNA LINK MODULE(M7792 TO ETHER	1	1	1
5	5	SEE NOTE	BC08R-00		I/O CABLE	2	2	2
6	7		9006073-03		SCREW,MACH TRUSS PHIL 10-	2	REF	REF
7	8		9007786-00		RETAINER,U-NUT 10-32X	2	REF	REF
8	9	A-PA-3700713-0-0	3700713-01		PKG OPTION DEUNA-AA CUSTOMER	1	REF	REF
9	10	D-IA-7427292-0-DBU	7427292-01		FRAME,I/O DOUBLE QUAD	1	REF	REF
10	12	D-IA-7018798-0-0	7018798-08		UNA BULKHEAD CABLE ASSY.	1	REF	REF
11	13		3906557-00		BAG,POLY RECLOSE 2 MIL THK CLEA	1	REF	REF
12	14		EKDEUNA-UG		DEUNA USER'S GUIDE	1	1	1
13	15	K-PL-CKDEUNA-0-0	CKDEUNA-00		CABKIT REF TO K-AR-CKCKREF-0-0	REF	-	1

14 NOTE: NOTE 1. IF BC08R CABLE IS NOT AVAILABLE, BC08S-01 MAY
15 NOTE: BE USED IN ITS' PLACE.
16 NOTE: NOTE 2. ITEMS 7 & 8 TO BE PUT INTO ITEM 13 FOR SHIPPING.
17 NOTE: NOTE 3. CK-DEUNA-00 IS A REFERENCE VARIANT ONLY.
18 NOTE: SEE K-AR-CKCKREF-0-0 FOR EXACT VARIANT APPLICATION.

REVISION HISTORY			BASIC PART NO: DEUNA				
ENG	ECO NUMBER	REV	SECTION A OF A				
ML	DEUNA-MK002	C	SECTION.VARIATION INDEX	DRN: H.DENSMORE	DATE: 21-FEB-85	D I G I T A L	
			[A]AA,M ,KP	CHK'D: B.FRASER	28-MAR-85 DATE: 21-FEB-85	TITLE PARTS LIST OPTION DEUNA	
			[B]	DES.ENG: M.STECKLAIR	25-FEB-85 DATE: 21-OCT-82	DOCUMENT NUMBER	
			[C]	RESP.ENG.: M.LAWRENCE	25-FEB-85 DATE: 21-FEB-85	SIZE K / CODE PL / NUMBER DEUNA-0-0	REV C
			[D]				
			[E]	MFG.ENG.: W.BROOKE	28-FEB-85 DATE: 21-FEB-85	RELEASE DATE: 27-MAR-85	
			[F]	ASSEMBLY NUMBER: E-UA-DEUNA-0-0	TOP DOCUMENT NUMBER: #K-DD-DEUNA-0	FILE NAME: MK1178.PLS	EDIT # 4

DRAWING DIRECTORY

ITEM	DRAWING NO.	NO. OF SHTS	PART NO.	DESCRIPTION	TYPE	REVISIONS										
1			M7792-00	DEUNA PORT MODULE		A	A	A	A	A	A	A	A			
2	D-UA-M7792-0-0	2		UNIT ASSEMBLY		A	B	B	B	B	B1	B1	B1			
3	D-EC-5015542-0-0	3		ETCH CUT		A	B	B	B	B	B1	B1	B1			
4			5015542-00	ETCH		B	B	B	B	B	B	B	B			
5	D-MD-5015542-0-0	5		DRILL & ETCH		A	A	A	A	A	A1	A1	A1			
6	K-PL-M7792-0-0	3		PARTS LIST		A	A	B	C	D	D1	D1	D1			
7	K-PC-M7792-0-DBI			PC DATABASE		B	B	B	B	B	B	B	B			
8	K-CS-M7792-0-DBS			SUDS DATABASE		A	B	C	C	C	C1	C1	C1			
9	K-CS-M7792-0-PRTA	1		SCHEMATIC		A	A	A	A	A	A1	A1	A1			
10	K-CS-M7792-0-PRTB	1		SCHEMATIC		A	A	A	A	A	A1	A1	A1			
11	K-CS-M7792-0-PRTC	1		SCHEMATIC		A	A	A	A	A	A1	A1	A1			
12	K-CS-M7792-0-PRTD	1		SCHEMATIC		A	B	B	B	B	B1	B1	B1			
13	K-CS-M7792-0-PRTE	1		SCHEMATIC		A	B	B	B	B	B1	B1	B1			
14	K-CS-M7792-0-PRTF	1		SCHEMATIC		A	A	A	A	A	A1	A1	A1			
15	K-CS-M7792-0-PRTH	1		SCHEMATIC		A	A	A	A	A	A1	A1	A1			
16	K-CS-M7792-0-PRTJ	1		SCHEMATIC		A	A	A	A	A	A1	A1	A1			
17	K-CS-M7792-0-PRTK	1		SCHEMATIC		A	B	B	B	B	B1	B1	B1			
18	K-CS-M7792-0-PRTL	1		SCHEMATIC		A	A	A	A	A	A1	A1	A1			
19	K-CS-M7792-0-PRTM	1		SCHEMATIC		A	B	B	B	B	B1	B1	B1			
20	K-CS-M7792-0-PRTN	1		SCHEMATIC		A	B	B	B	B	B1	B1	B1			
21	K-CS-M7792-0-PRTP	1		SCHEMATIC		A	A	B	B	B	B1	B1	B1			
22	K-CS-M7792-0-PRTR	1		SCHEMATIC		A	A	A	A	A	A1	A1	A1			
23	K-CS-M7792-0-PRTS	1		SCHEMATIC		A	A	A	A	A	A1	A1	A1			
24	K-CS-M7792-0-TT1	1		SCHEMATIC		A	A	A	A	A	A1	A1	A1			
25	K-CS-M7792-0-TT2	1		SCHEMATIC		A	A	A	A	A	A1	A1	A1			
					DD REV	A	B	C	D	E	F	H	J			

NOTES:
1. SHEETS 1 & 2 OF THIS DD LIST THE REVISION LEVEL TO SUPPORT ETCH REV B.
2. SHEETS 3 & 4 OF THIS DD LIST THE REVISION LEVEL TO SUPPORT ETCH REV C.

REVISION HISTORY

ENG	ECO NUMBER	REV
	INITIAL	A
	M7792-TW001	B
	M7792-TW002	C
	M7792-TW003	D
	M7792-TW004	E
	M7792-TW005	F
	M7792-TW006	H
ML	M7792-MK007	J

CONT. REVISION HISTORY

ENG	ECO NUMBER	REV

MADE BY: T. WALSH
DATE: 04 NOV 82

CHECKED BY: T. WALSH FLC 12-APR-85
DATE: 04 NOV 82

DESIGN ENGINEER: M. LAWRENCE
DATE: 02 APR 85 4-12-85

RESPONSIBLE ENG: M. LAWRENCE
DATE: 02 APR 85 4-12-85

PRODUCTION ENG: W. BROOKE
DATE: 02 APR 85

d i g i t a l

TITLE DRAWING DIRECTORY

DEUNA PORT MODULE

SIZE	CODE	DOCUMENT NUMBER	REV.
K	DD	M7792-0	J

SHEET 1 OF 4 MKO

DRAWING DIRECTORY CONTINUED

ITEM	DRAWING NO.	NO. OF SHTS	PART NO.	DESCRIPTION	TYPE	REVISIONS										
26	K-CS-M7792-0-TT3	1		SCHEMATIC		A	A	A	A	A	A1	A1	A1			
27	K-CS-M7792-0-TT4	1		SCHEMATIC		A	A	A	A	A	A1	A1	A1			
28	K-CS-M7792-0-TT5	1		SCHEMATIC		A	A	A	A	A	A1	A1	A1			
					DD REV	A	B	C	D	E	F	H	J			

NOTES:

REVISION HISTORY			CONT. REVISION HISTORY		
ENG	ECO NUMBER	REV	ENG	ECO NUMBER	REV

MADE BY:
DATE:

CHECKED BY:
DATE:

DESIGN ENGINEER:
DATE:

RESPONSIBLE ENG:
DATE:

PRODUCTION ENG:
DATE:

d i g i t a l

TITLE DRAWING DIRECTORY

DEUNA PORT MODULE

SIZE	CODE	DOCUMENT NUMBER	REV.
K	DD	M7792-0	J

SHEET 2 OF 4 MKO

DRAWING DIRECTORY CONTINUED

ITEM	DRAWING NO.	NO. OF SHTS	PART NO.	DESCRIPTION	TYPE	REVISIONS										
29			M7792-00	DEUNA PORT MODULE		A	B	C	D	E1	E2	E3	E4			
30	D-UA-M7792-0-0	2		UNIT ASSEMBLY		A	B	B	B	B	C	D	E			
31	D-EC-5015542-0-0	3		ETCH CUT		A	B	B	B	B	-	-	-			
32			5015542-00	ETCH		B	B	B	B	B	C	C	C			
33	D-MD-5015542-0-0	5		DRILL & ETCH		A	A	A	A	A	B	B	B			
34	K-PL-M7792-0-0	3		PARTS LIST		A	A	B	C	D	E	F	H			
35	K-PC-M7792-0-DBI			PC DATABASE		B	B	B	B	B	C	C	C			
36	K-CS-M7792-0-DBS			SUDS DATABASE		A	B	C	C	C	D	E	E			
37	K-CS-M7792-0-PRTA	1		SCHEMATIC		A	A	A	A	A	A	A	A			
38	K-CS-M7792-0-PRTB	1		SCHEMATIC		A	A	A	A	A	A	A	A			
39	K-CS-M7792-0-PRTC	1		SCHEMATIC		A	A	A	A	A	A	A	A			
40	K-CS-M7792-0-PRTD	1		SCHEMATIC		A	B	B	B	B	C	C	C			
41	K-CS-M7792-0-PRTE	1		SCHEMATIC		A	B	B	B	B	C	C	C			
42	K-CS-M7792-0-PRTF	1		SCHEMATIC		A	A	A	A	A	A	A	A			
43	K-CS-M7792-0-PRTH	1		SCHEMATIC		A	A	A	A	A	B	B	B			
44	K-CS-M7792-0-PRTJ	1		SCHEMATIC		A	A	A	A	A	B	B	B			
45	K-CS-M7792-0-PRTK	1		SCHEMATIC		A	B	B	B	B	C	C	C			
46	K-CS-M7792-0-PRTL	1		SCHEMATIC		A	A	A	A	A	B	B	B			
47	K-CS-M7792-0-PRTM	1		SCHEMATIC		A	B	B	B	B	C	C	C			
48	K-CS-M7792-0-PRTN	1		SCHEMATIC		A	B	B	B	B	C	C	C			
49	K-CS-M7792-0-PRTP	1		SCHEMATIC		A	A	B	B	B	C	C	C			
50	K-CS-M7792-0-PRTR	1		SCHEMATIC		A	A	A	A	A	A	A	A			
51	K-CS-M7792-0-PRTS	1		SCHEMATIC		A	A	A	A	A	A	A	A			
52	K-CS-M7792-0-TT1	1		SCHEMATIC		A	A	A	A	A	A	A	A			
53	K-CS-M7792-0-TT2	1		SCHEMATIC		A	A	A	A	A	A	A	A			
NOTES:					DD REV	A	B	C	D	E	F	H	J			

REVISION HISTORY			CONT. REVISION HISTORY		
ENG	ECO NUMBER	REV	ENG	ECO NUMBER	REV

MADE BY:
DATE:

CHECKED BY:
DATE:

DESIGN ENGINEER:
DATE:

RESPONSIBLE ENG:
DATE:

PRODUCTION ENG:
DATE:

d i g i t a l

TITLE DRAWING DIRECTORY

DEUNA PORT MODULE

SIZE	CODE	DOCUMENT NUMBER	REV.
K	DD	M7792-0	J

SHEET 3 OF 4 MKO

DRAWING DIRECTORY CONTINUED

ITEM	DRAWING NO.	NO. OF SHTS	PART NO.	DESCRIPTION	TYPE	REVISIONS										
54	K-CS-M7792-0-TT3	1		SCHEMATIC		A	A	A	A	A	A	A	A			
55	K-CS-M7792-0-TT4	1		SCHEMATIC		A	A	A	A	A	A	B	B			
56	K-CS-M7792-0-TT5	1		SCHEMATIC		A	A	A	A	A	A	B	B			
57	K-CS-M7792-0-TT6	1		SCHEMATIC		-	-	-	-	-	A	A	A			
58	K-CS-M7792-0-TT7	1		SCHEMATIC		-	-	-	-	-	A	A	A			
59	K-CS-M7792-0-TT8	1		SCHEMATIC		-	-	-	-	-	A	A	A			
60	K-CS-M7792-0-TT9	1		SCHEMATIC		-	-	-	-	-	A	A	A			
61	K-CS-M7792-0-BD1	1		SCHEMATIC		-	-	-	-	-	A	A	A			
62	K-CS-M7792-0-CR1	1		SCHEMATIC		-	-	-	-	-	A	A	A			
63	K-CS-M7792-0-IRA	1		SCHEMATIC		-	-	-	-	-	A	A	A			
64	K-CS-M7792-0-IRB	1		SCHEMATIC		-	-	-	-	-	A	A	A			
65	K-CS-M7792-0-IRC	1		SCHEMATIC		-	-	-	-	-	A	A	A			
66	K-CS-M7792-0-IRD	1		SCHEMATIC		-	-	-	-	-	A	A	A			
67	K-CS-M7792-0-IRE	1		SCHEMATIC		-	-	-	-	-	A	A	A			
68	K-CS-M7792-0-LSM	1		SCHEMATIC		-	-	-	-	-	A	A	A			
69	K-CS-M7792-0-SD1	1		SCHEMATIC		-	-	-	-	-	A	A	A			
70	K-CS-M7792-0-SD2	1		SCHEMATIC		-	-	-	-	-	A	A	A			
71	K-CS-M7792-0-SD3	1		SCHEMATIC		-	-	-	-	-	A	A	A			
72	K-CS-M7792-0-TD1	1		SCHEMATIC		-	-	-	-	-	A	A	A			
73	K-CS-M7792-0-TD2	1		SCHEMATIC		-	-	-	-	-	A	A	A			
74	K-CS-M7792-0-TD3	1		SCHEMATIC		-	-	-	-	-	A	A	A			
75	K-CS-M7792-0-TD4	1		SCHEMATIC		-	-	-	-	-	A	A	A			
76	K-CS-M7792-0-TD5	1		SCHEMATIC		-	-	-	-	-	A	A	A			
77	K-CS-M7792-0-TD6	1		SCHEMATIC		-	-	-	-	-	A	A	A			
78	K-CS-M7792-0-TD7	1		SCHEMATIC		-	-	-	-	-	A	A	A			
79	K-CS-M7792-0-TD8	1		SCHEMATIC		-	-	-	-	-	A	A	A			
					DD REV	A	B	C	D	E	F	H	J			

NOTES:

REVISION HISTORY			CONT. REVISION HISTORY		
ENG	ECO NUMBER	REV	ENG	ECO NUMBER	REV

MADE BY:
DATE:

CHECKED BY:
DATE:

DESIGN ENGINEER:
DATE:

RESPONSIBLE ENG:
DATE:

PRODUCTION ENG:
DATE:

digital

TITLE DRAWING DIRECTORY

DEUNA PORT MODULE

SIZE	CODE	DOCUMENT NUMBER	REV.
K	DD	M7792-0	J

SHEET 4 OF 4 MKO

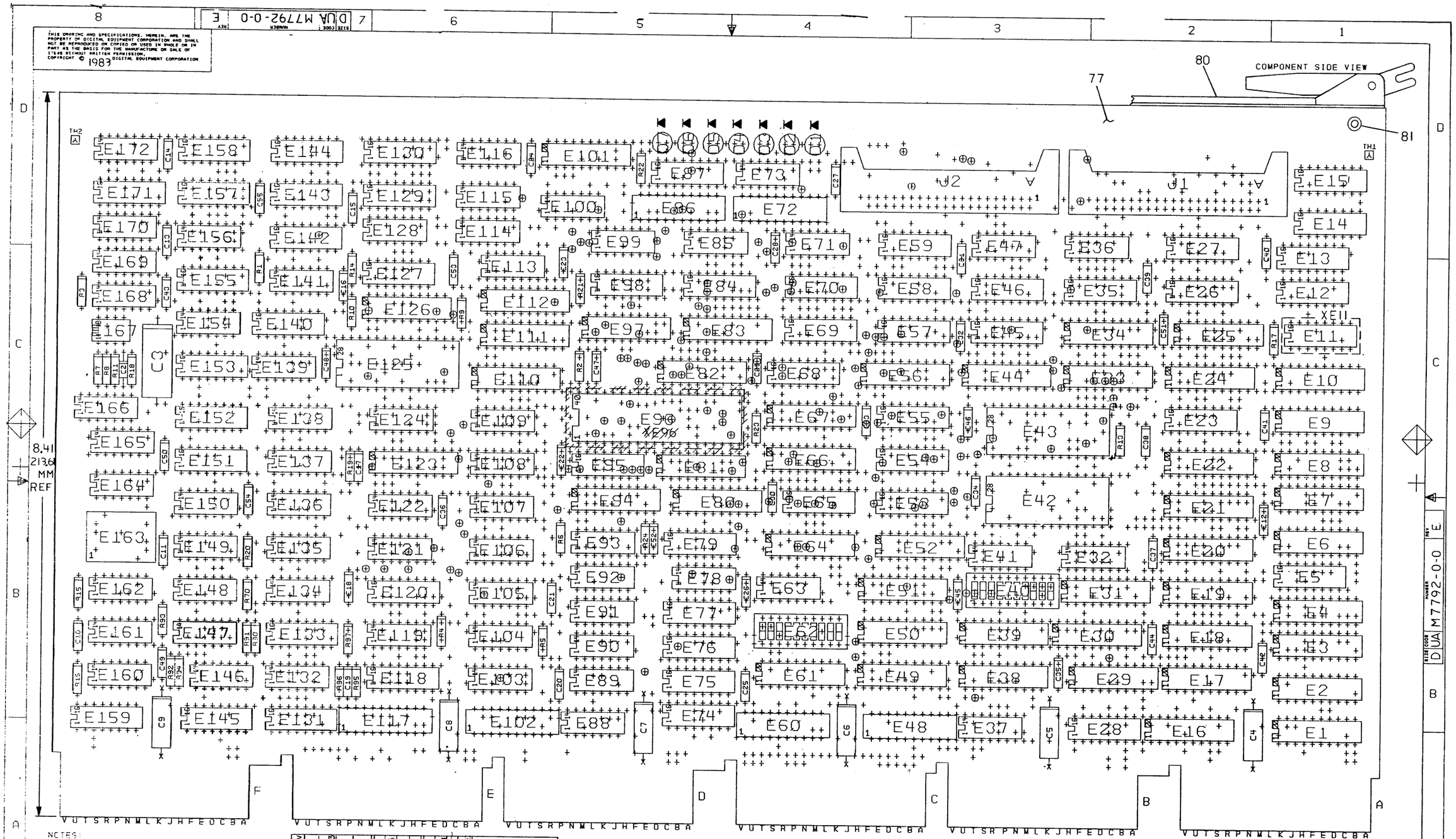

NOTES:
1. E14 & E15 ARE SPARE LOCATIONS.
2. UL RATING IS LPWR.

STEP Z	↑ Y AXIS ____ STEP 0 TIMES
REPEAT	→ X AXIS ____ STEP 0 TIMES

CHK	CHANGE NO	REV
	M7792-TW5	C
	T. WALSH 26MAY83	
	K. SARGENT	
WO	M7792-TW6	D
	D.GARDNER 10/3/83	
	K. SARGENT	
ECO	M7792-MK7	E
	D. Brancaccio	
	M. LAWRENCE	

ETCH REV. C-P1

SIGNATURES	DATE
DRN. Paul Teller	2-17-83
CHK'D.	2-17-83
MECH. ENG.	
PROJ. ENG.	
PROD.	

digital

TITLE DEUNA PORT MODULE

SCALE 2/1	SIZE	CODE	NUMBER	REV
SHT. 1 OF 1	D	UA	M7792-0-0	E

NEXT HIGHER ASSY. B-DD-M7792-0

MKO 1 WO# 302333

LAYER 1

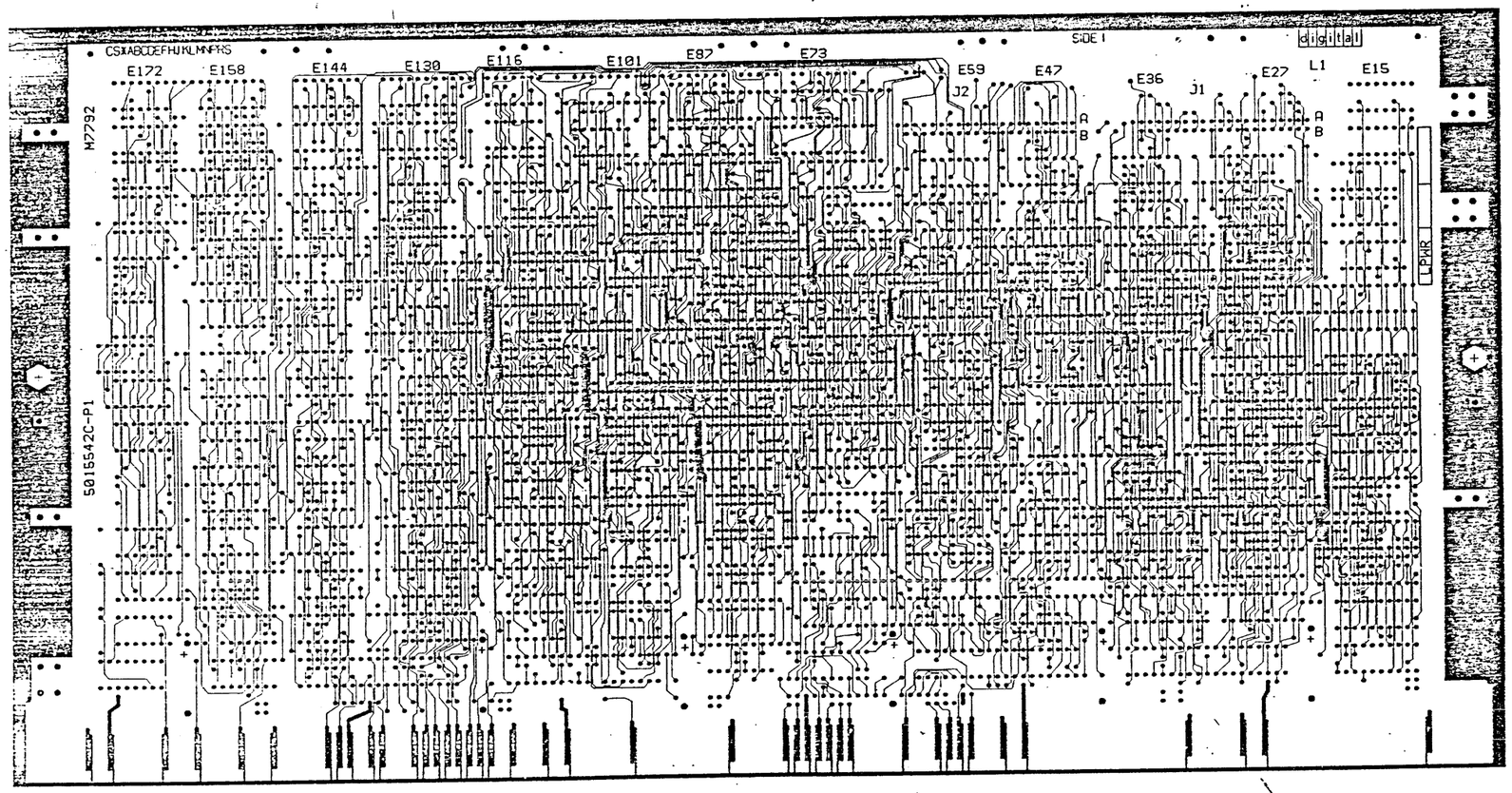
CSXABCDEFHJKLMNPRS
SIDE 1
digital
E172
E158
E144
E130
E116
E101
E87
E73
E59
E47
E36
J1
E27
L1
E15
J2
A
B
A
B
LL PWR
M7792
5015542C-P1

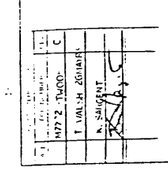
M7792 TWIDDY
T. VALJA 26MAY85
R. SAUGENT

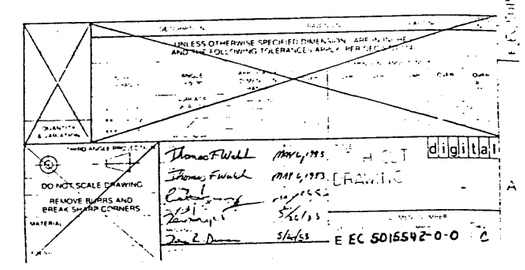
UNLESS OTHERWISE SPECIFIED DIMENSIONS ARE IN INCHES AND THE FOLLOWING TOLERANCES APPLY
DO NOT SCALE DRAWING
REMOVE BURRS AND BREAK SHARP CORNERS
MATERIAL
Thomas F Wall MAY 6, 1985
Thomas F Wall MAY 6, 1985
digital
DRAWING
E EC 5015542-0-0
C

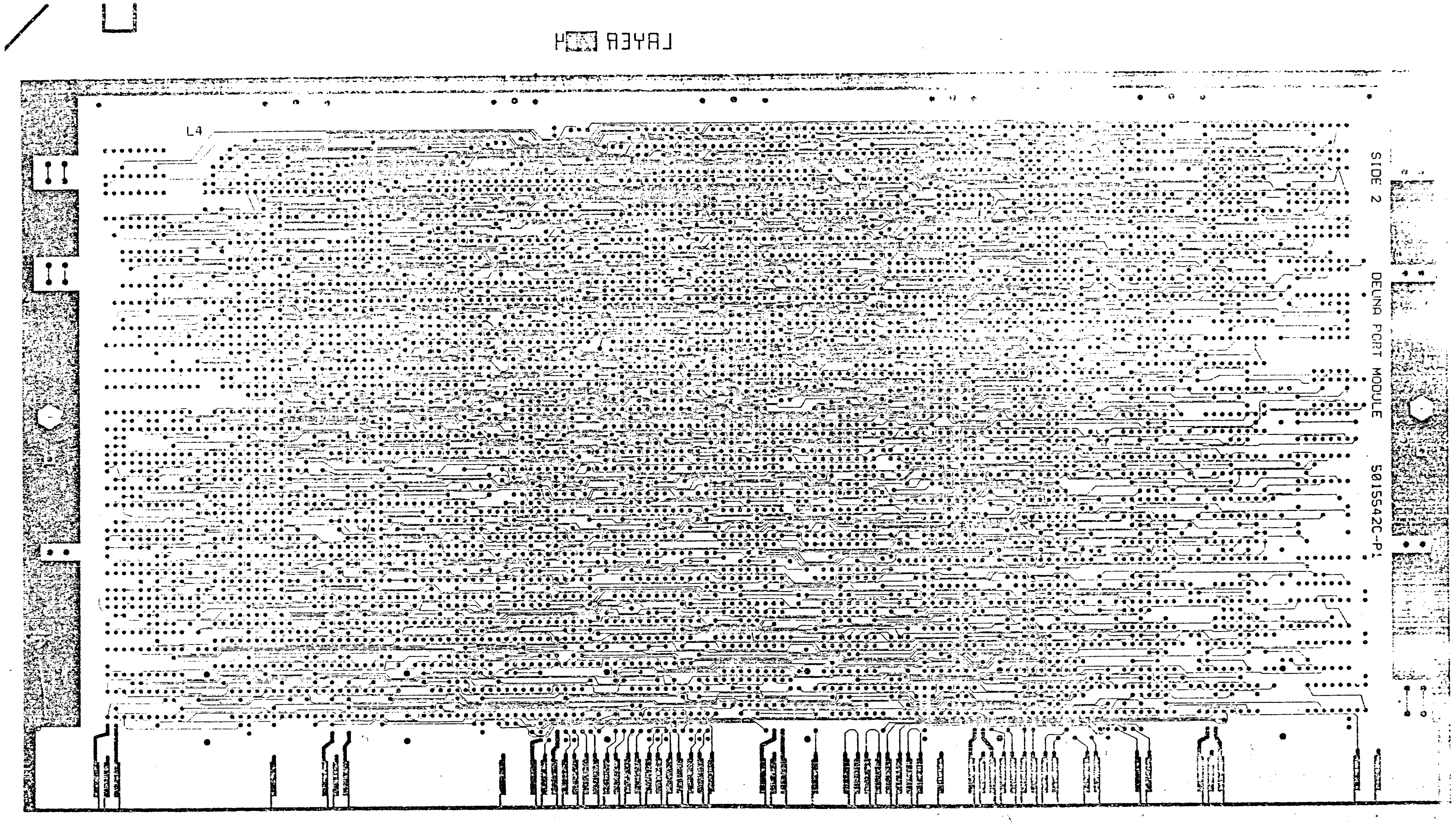

TITLE
ETCH CUT DRAWING

E EC 5015542-0-0 C

2/1 2 OF 2

AUTOMATED BY PRTLST,4Q(50)

P A R T S L I S T

LINE	ITEM	TOP DOCUMENT	PART NUMBER	MIN REV	DESCRIPTION	QTY PER VARIATION 00 / VARIATION REVISION LEVEL: E4	REFERENCE DESIGNATOR
1	77	D-MD-5015542-0-0	5015542-00	C	DRILL & ETCH CUT	1	
2	1		1001610-00		.01 MFD 50V +80-20% Z5U CER	1	C2
3	3		1012084-01		8 MFD 25V +75-10% AL EL	6	C4,C5,C6,C7,C8,C9
4	4		1012784-00		.047 MFD 50V +80-20% CER	46	C10,C11,C12,C13,C14,C15,C16,C17,
							CONT C18,C19,C20,C21,C22,C23,C24,C25,
							CONT C26,C27,C28,C29,C30,C31,C32,C33,
							CONT C34,C35,C36,C37,C38,C39,C40,C41,
							CONT C42,C43,C44,C45,C46,C47,C48,C49,
							CONT C50,C51,C52,C53,C54,C55
5	2		1010031-07		1 MFD 50V 10% M.POLYCARB	1	C3
6	5		1112689-00		LED .8MCD@16MA VF=5V	7	D1,D2,D3,D4,D5,D6,D7
7	65		1209941-02		PCB,HEADER 40PIN(2X20),100CC 90D	2	J1,J2
8	19		1211164-06		SW,DIP 10POS/1PST 5VDC100MA F	2	E40,E62
9	79	BLANK			*** THIS ITEM IS NOT USED ***	-	
10	78	BLANK	1212385-03		*** THIS ITEM IS NOT USED ***	-	
11	80		1216988-02		HANDLE,MODULE,HEX TWO EJECTORS	1	
12	15		1300005-01		R NETWORK 13-1K 5.0 % 14PIN	2	E32,E63
13	69		1300229-00		100.0 .25 W 5.0 % CF	7	R6,R9,R10,R13,R19,R21,R22
14	76		1300247-00		120.0 .25 W 5.0 % CF	1	R91
15	68		1300295-00		330.0 .25 W 5.0 % CF	1	R5
16	66		1300365-00		1.0 K .25 W 5.0 % CF	9	R1,R3,R4,R11,R14,R17,R18,R20,R70
17	74		1300479-00		10.0 K .25 W 5.0 % CF	1	R24
18	75		1301322-00		180.0 .25 W 5.0 % CF	1	R90
19	72		1301425-00		300.0 .25 W 5.0 % CF	1	R16
20	71		1301890-00		560.0 .25 W 5.0 % CF	1	R15
21	67		1302388-00		2.0 K .25 W 5.0 % CF	1	R2
22	73		1303114-00		1.0 K .25 W 1.0 % RN55D-F10	1	R23
23	70		1317183-05		487.0 K .25 W 1.0 % RN55D-F10	2	R7,R8
24	60		1613120-00		DELAY= 200NS,10TAPS	1	E159
25	63		1811660-36		OSCILLATOR, XTAL 7.500 MHZ	1	E163

REVISION HISTORY			BASIC PART NO: M7792				
ENG	ECO NUMBER	REV	SECTION A OF A	DRN: H.DENSMORE	DATE: 02-APR-85	D I G I T A L	
---	INITIAL	A	SECTION,VARIATION INDEX	CHK'D: F.CARBONE	DATE: 12-APR-85	TITLE PARTS LIST DEUNA PORT MODULE	
TE	M7792-TW002	B	[A] 00				
TE	M7792-TW003	C	[B]	DES.ENG: M.STECKLAIR	DATE: 4-12-85 10-SEP-82	DOCUMENT NUMBER	
TE	M7792-TW004	D	[C]			SIZE / CODE / NUMBER	REV
RS	M7792-TW005	E	[D]				
KS	M7792-TW006	F	[E]	RESP.ENG.: M.LAWRENCE	DATE: 4-12-85 02-APR-85	K / PL / M7792-0-0	H
ML	M7792-MK007	H	[F]				
			[H]				
			[J]				
			[K]	MFG.ENG.: W.BROOKE	DATE: 02-APR-85	RELEASE DATE: 11-APR-85	
			[L]				
			[M]	ASSEMBLY NUMBER:	TOP DOCUMENT NUMBER:	FILE NAME:	EDIT #
			[N]	D-UA-M7792-0-0	#K-DD-M7792-0	MK1192.PLS	22

LINE	ITEM	TOP DOCUMENT	PART NUMBER	MIN REV	DESCRIPTION	QTY PER VARIATION 00	REFERENCE DESIGNATOR
					VARIATION REVISION LEVEL:	E4	
26	61		1909705-00	DEC 8881	NAND GATE-QUAD 2IN O	1	E160
27	45		1909712-00	DEC 8242	COMPARATOR-4BIT N,	1	E104
28	56		1910532-00	74S00	NAND GATE-QUAD 2IN	1	E149
29	46		1915019-00	74S38	NAND BUFFER-QUAD 2IN	1	E105
30	42		1910534-00	74S04	INVERTER GATE-HEX 1I	1	E100
31	36		1910544-00	74S74	FF-D DUAL,EDGE TRIGG	7	E92,E124,E136,E137,E139,E148,
						CONT	E166
32	62		1910878-00	7427	NOR GATE-TRIPLE 3IN	1	E161
33	31		1910951-00	9602	ONE SHOT-DUAL	1	E79
34	17		1911573-00	74S280	PARITY GEN/CHKR,9BIT	2	E36,E47
35	50		1911579-00	8641	TRANSCEIVER,BUS,QUA	2	E118,E120
36	29		1911676-00	74S139	DECODER-DUAL TWO-INP	1	E74
37	64		1911944-00	555CN	TIMER,FUNCT.BLOCK	1	E167
38	55		1912389-00	74S08	AND GATE-QUAD 2IN,PO	1	E141
39	13		1912647-00	LS257	MUX 1 OF 2 (QUAD)	4	E23,E45,E54,E65
40	10		1912697-00	LS174	FF-D HEX W/CLEAR	3	E5,E143,E144
41	33		1912799-00	LS00	NAND-GATE-QUAD 2IN,P	4	E85,E88,E115,E169
42	34		1912801-00	LS02	NOR-GATE-QUAD 2IN	3	E89,E106,E164
43	35		1912803-00	LS04	INVERTER GATE,HEX	3	E90,E107,E134
44	26		1912805-00	LS08	AND GATE-QUAD 2IN,PO	6	E71,E113,E119,E121,E132,E135
45	28		1912807-00	LS10	NAND GATE-TRIPLE 3IN	2	E73,E108
46	48		1912810-00	LS20	NAND GATE-DUAL 4IN	2	E114,E122
47	44		1912811-00	LS21	AND GATE-DUAL 4IN,PO	1	E103
48	49		1912813-00	LS27	NOR GATE-TRIPLE 3IN	1	E116
49	30		1912816-00	LS32	OR GATE-QUAD 2IN,POS	4	E78,E91,E109,E150
50	20		1912824-00	LS74	FF-D DUAL,EDGE TRIGG	7	E41,E99,E128,E138,E146,E147,E168
51	25		1912842-00	LS138	DECODER-THREE INPUT,	5	E58,E75,E76,E77,E140
52	53		1912845-00	LS153	MUX 1 OF 4 (DUAL)	7	E129,E130,E153,E155,E157,E158,
						CONT	E171
53	38		1912848-00	LS158	MUX 1 OF 2 (QUAD)	1	E95
54	57		1912851-00	LS169	COUNTER,SYNCH, UP/DO	1	E151
55	12		1912854-00	LS193	COUNTER,SYNCHR,4BIT,	14	E12,E13,E26,E27,E35,E46,E55,E57,
						CONT	E59,E68,E69,E70,E127,E142
56	16		1912863-00	LS273	FF-D OCTAL W/CLEAR	2	E34,E83
57	58		1912864-00	LS279	LATCH,QUAD-S-R	1	E152
58	52		1913462-00	74S240	OCTAL BUFFER,INVERTI	1	E126
59	40		1913671-00	74S374	FF-D,OCTAL,TRI STATE	2	E97,E123
60	24		1913888-00	DC 102A	EQUALS CHECKER 8BIT	1	E51
61	18		1914085-00	74S260	NOR GATE-DUAL,POS	1	E37
62	6		1914214-00	LS374	FF-D OCTAL EDGE TRIG	8	E1,E6,E16,E17,E20,E22,E24,E29
63	54		1914438-00	DC 013	UNIBUS INTERRRUPT-BIP	2	E131,E145
64	59		1914451-00	LS393	COUNTER,BINARY,4BIT	6	E154,E156,E162,E165,E170,E172
65	32		1914768-00	C 67401J	MEMORY FIFO,SERIAL	2	E84,E87
66	14		1914845-00	2918	FF-D QUAD TRI-STATE	1	E28
67	9		1915193-00	LS244	DRIVER,LINE,OCTAL,TR	21	E4,E8,E9,E10,E18,E19,E21,E25,
						CONT	E30,E31,E33,E38,E49,E52,E61,E64,
						CONT	E66,E67,E80,E81,E94
68	8		1915219-00	LS373	FF-D OCTAL-TRANSPARE	2	E3,E7

DIGITAL	TITLE	SECTION A OF A	SIZE	CODE	DOCUMENT NUMBER	REV
	DEUNA PORT MODULE		K	PL	M7792-0-0	H

LINE	ITEM	TOP DOCUMENT	PART NUMBER	MIN REV	DESCRIPTION	QTY PER VARIATION 00	REFERENCE DESIGNATOR
					VARIATION REVISION LEVEL:	E4	
69	37		1915932-00		LS125 BUFFER,QUAD BUS	1	E93
70	23		1919015-00	DC	021 BUS TRANSCEIVER,20PI	4	E48,E60,E102,E117
71	39		2117311-01		T-11 MICROPROCESSOR W/LSI-	1	E96
72	27		2118054-03		16K MOS RAM 55NS 2	2	E72,E86
73	22		2119250-00		4KX4 STATIC RAM 55NS	4	E44,E56,E82,E110
74	11		23365A1-00		A1-09	1	E11
75	41		23366A1-00		A1-07	1	E133
76	51		23367A1-00		A1-07	1	E53
77	21		23992A9-00		A9-01	1	E98
78	7		23090C6-00		C6-01	1	E125
79	43		23229E4-00		E4-06	1	E43
80	47		23228E4-00		E4-06	1	E42
81	81		9009000-00		EYELET,ROLLED 0.1210DX0.156	10	
82	82		23119J5-00		J5-01 PAL,LOGIC DRIV	2	E2,E39
83	83		23118J5-00		J5-01 PAL,LOGIC DRIV	1	E50
84	84		23070K3-00		K3-01 PAL,REG, CONT	1	E101
85	85		23037K5-00		K5-01	1	E112
86	86		23038K5-00		K5-01	1	E111
87	87		1215006-02		SKT,IC 16PIN DIP TIN SOLD	1	XE11
88	88		1311422-00		178.0 .25 W 1.0 % RN55D-F10	4	R92,R94,R95,R97
89	89		1305125-00		383.0 .25 W 1.0 % RN55D-F10	2	R93,R96
90	90		9107256-11		TUBING,TEFLON .027ID	A/R	
91	91		9105740-55		WIRE(WRAP) 30AWG KYNAR UL14	A/R	

D I G I T A L	TITLE DEUNA PORT MODULE	SECTION A OF A	SIZE K	CODE PL	DOCUMENT NUMBER M7792-0-0	REV H

DELNA PORT MODULE

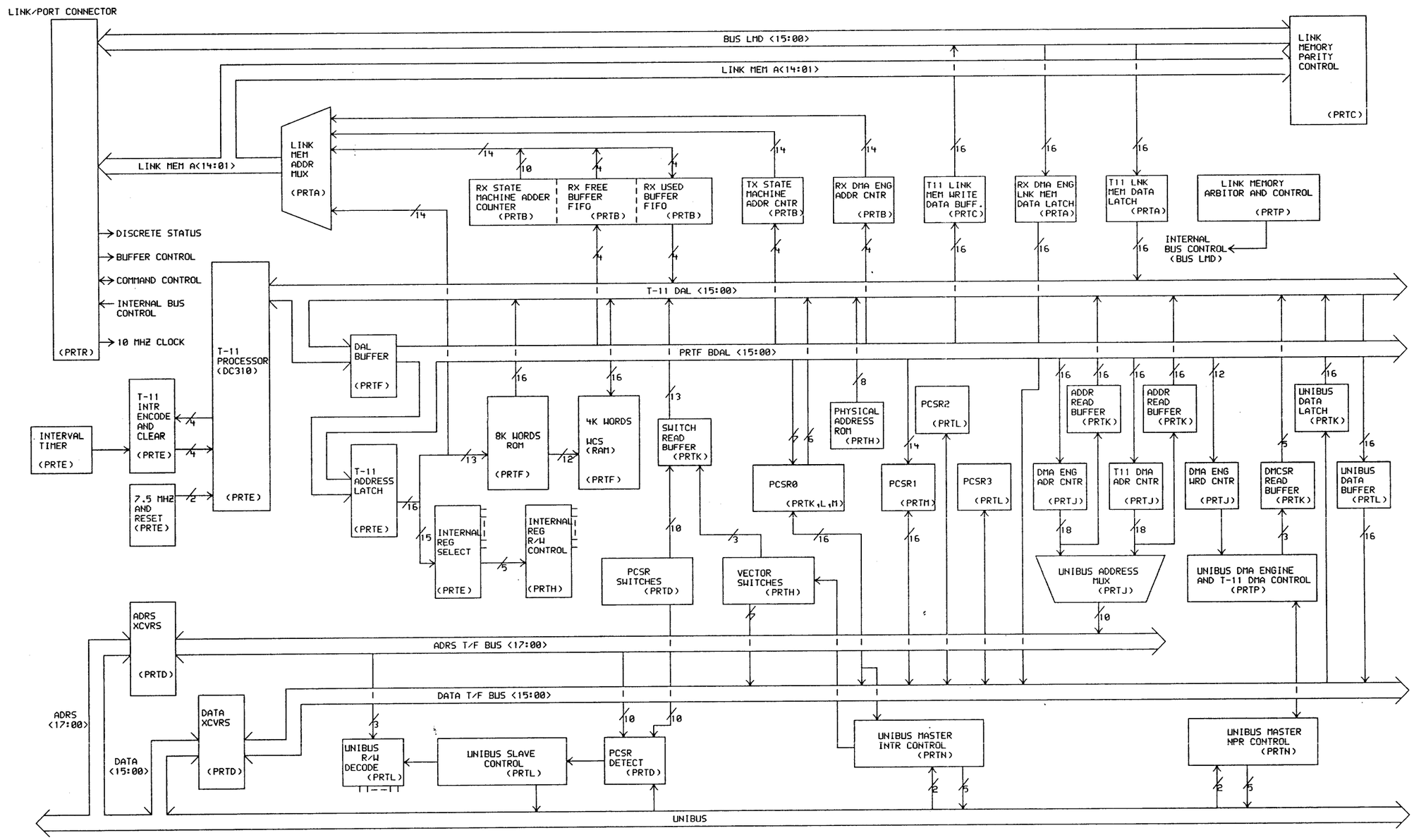

REVISIONS		
CHK	CHANGE NO.	REV

digital

DRN. P. HEBERT" DATE 16-MAY-83 | ENG. Rick Szmaux DATE 16-MAY-83 | TITLE: DELNA PORT MODULE (BD1)

CHK'D. DATE 16-MAY-83 | BOARD LOCATION: SHEET 1 OF 1

DSKE:<SARGENT>PRTBD1.;RW 16-MAY-83 06:21 | NEXT HIGHER ASSEMBLY: D-UA-M7792-0-0

FIRST USED ON OPTION/MODEL: DELNA

SIZE	CODE	NUMBER	REV.
K	CS	M7792-0-BD1	A

PORT CONTROL AND STATUS REGISTER 0 (PCSR0)

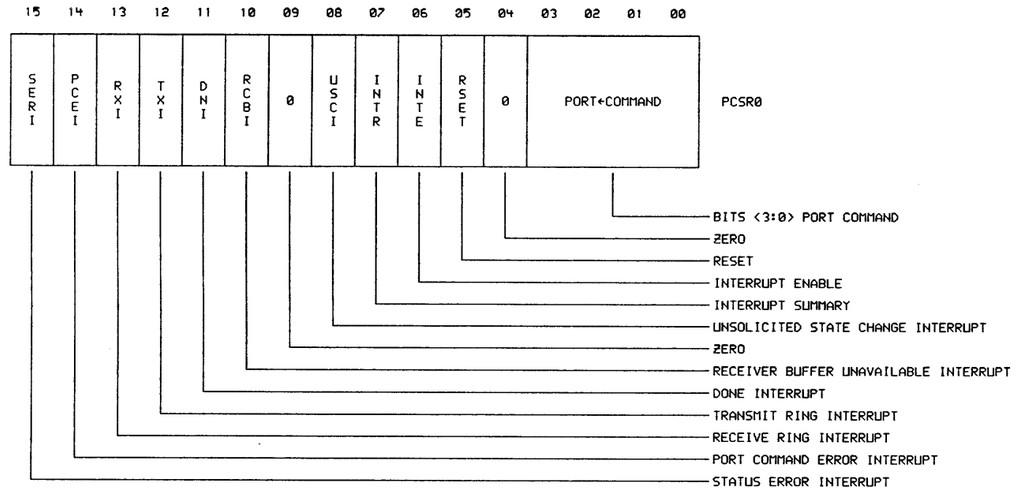

(PRTK,L,M)

PORT CONTROL AND STATUS REGISTER 1 (PCSR1)

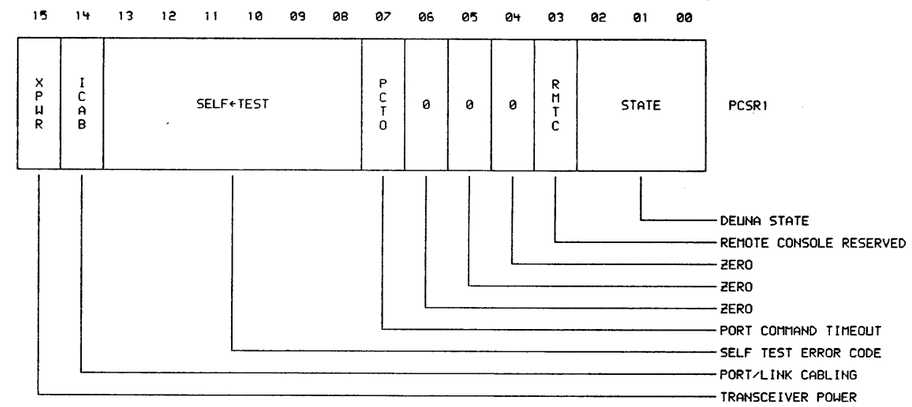

(PRTM)

PORT CONTROL AND STATUS REGISTER 2 (PCSR2)

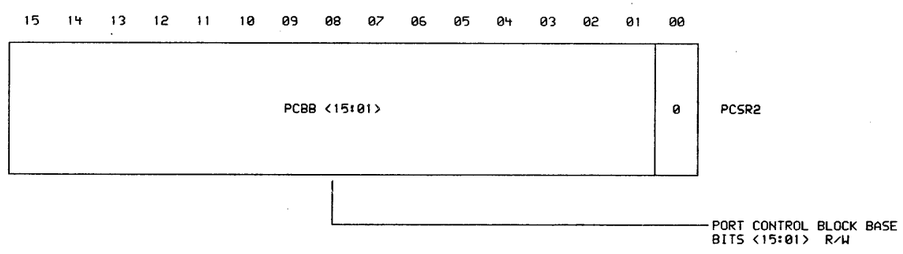

(PRTL)

PORT CONTROL AND STATUS REGISTER 3 (PCSR3)

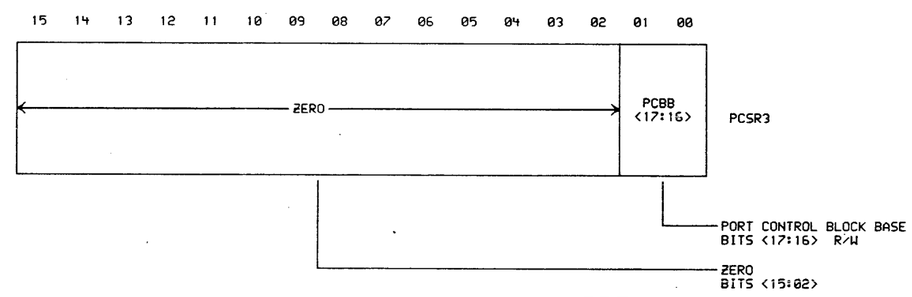

(PRTL)

UNIBUS PORT CONTROL & STATUS
REGISTERS (PCSR0-3)

REVISIONS		
CHK	CHANGE NO.	REV

digital

DRN. PAUL HEBERT" DATE 06-MAY-83 ENG. Rick Szmauz DATE 06-MAY-83
CHK DATE 06-MAY-83 BOARD LOCATION: SHEET 1 OF 1
DSKE:<SARGENT>PRTCR1.DRW 06-MAY-83 07:01 NEXT HIGHER ASSEMBLY: D-UA-M7792-0-0
FIRST USED ON OPTION/MODEL: DELUNA

TITLE: DELUNA PORT MODULE (CR1)

SIZE	CODE	NUMBER	REV.
K	CS	M7792-0-CR1	A

PHYADR (PHYSICAL ADDRESS REGISTER BIT CONFIGURATION)

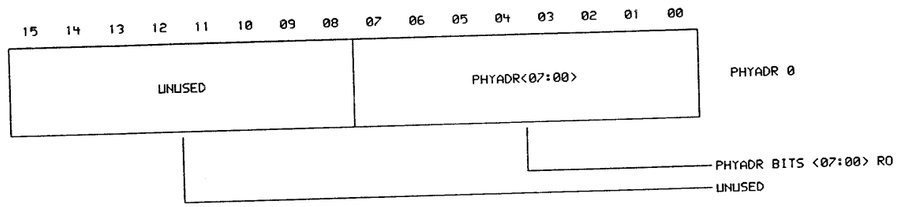

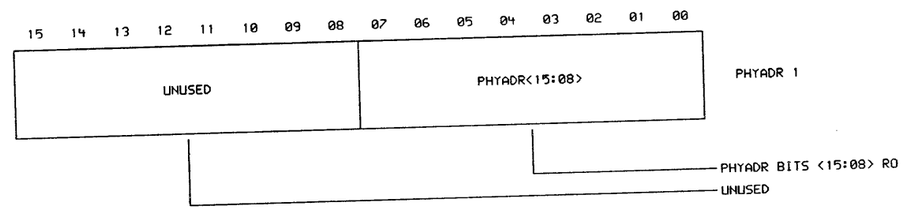

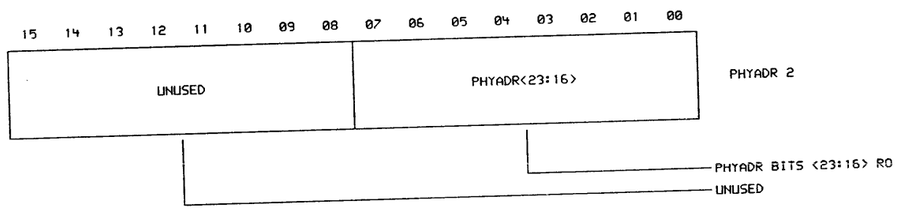

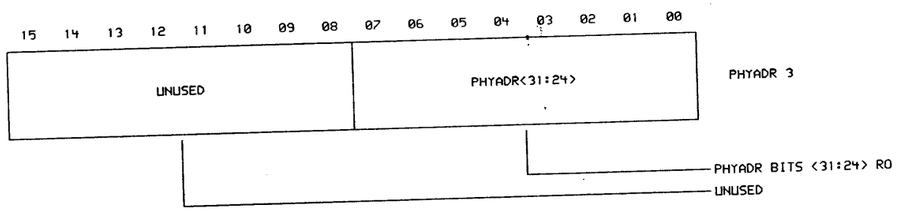

RO = READ ONLY

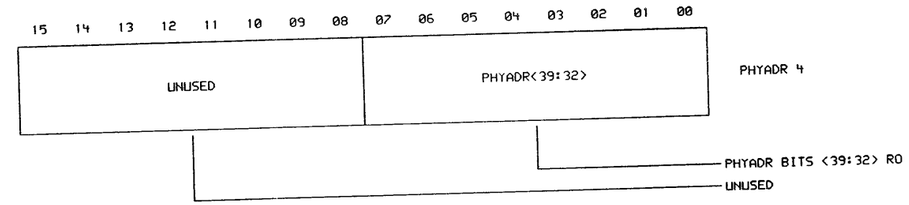

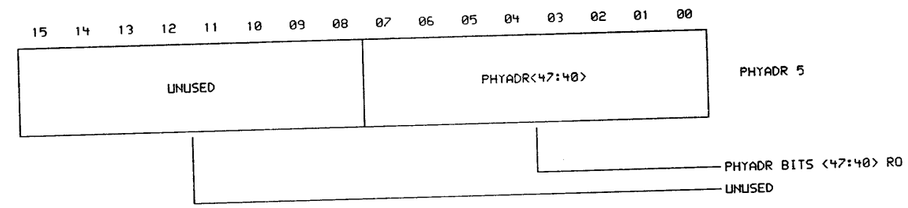

ROM CRC (READ ONLY MEMORY CYCLIC REDUNDANCY CHECK)

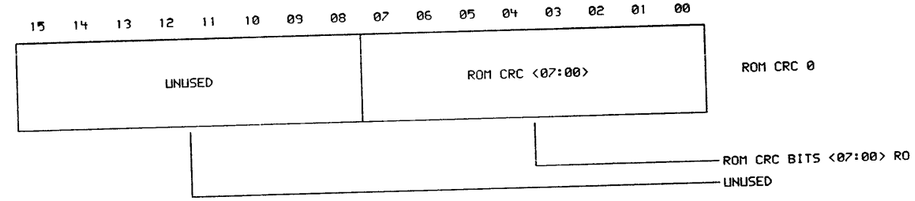

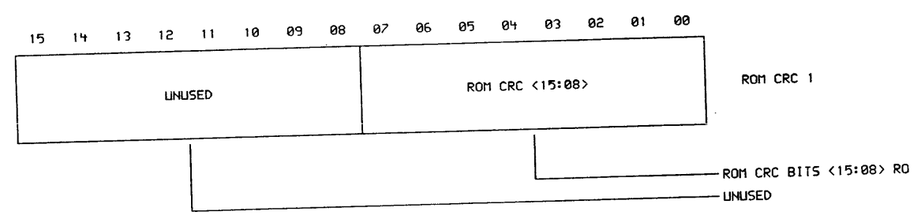

EHTERNET PHYSICAL ADDRESS ROM - (PRTH)

REVISIONS		
CHK	CHANGE NO.	REV

digital

DSKE:<SARGENT>PRTIRA.DRW 16-MAY-83 06:05
FIRST USED ON OPTION/MODEL: DELUNA

DRN. P.HEBERT"	DATE 16-MAY-83	ENG. Rick Szmauz	DATE 16-MAY-83
CHK. D. Rodgers	DATE 16-MAY-83	BOARD LOCATION:	
		SHEET 1 OF 1	
		NEXT HIGHER ASSEMBLY: D-UA-M7792-0-0	

TITLE: DELUNA PORT MODULE (IRA)

SIZE	CODE	NUMBER	REV.
K	CS	M7792-0-IRA	A

MDMA 0 [T11 UNIBUS ADDRESS COUNTER]

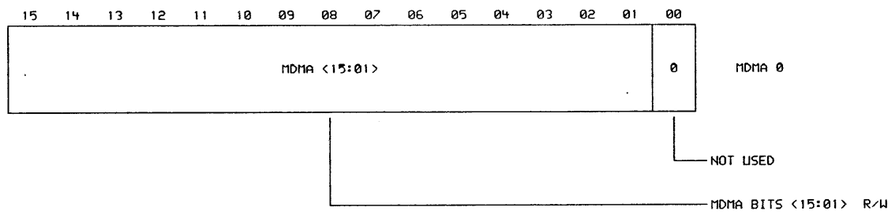

MICROPROCESSOR DMA DATA REGISTERS (MDMDR0 AND MDMDR1)

[UNIBUS DATA IN LATCH] R
[T11 UNIBUS DATA OUT BUFFER] W

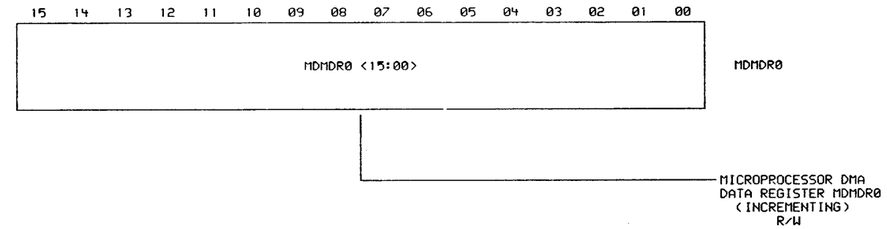

MDMA 1 [T11 UNIBUS ADDRESS COUNTER]

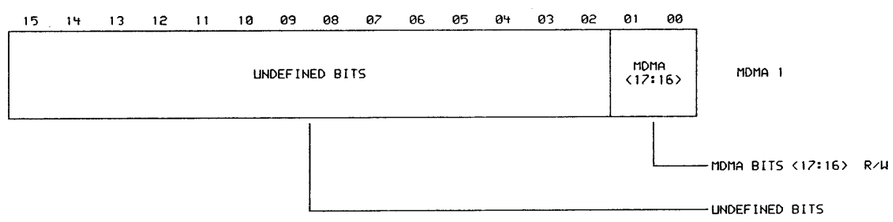

(PRTJ,K)

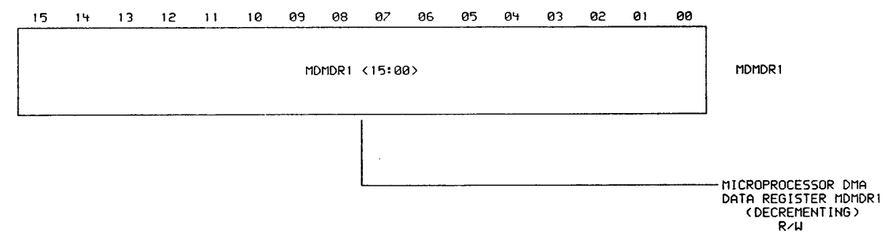

(PRTK,L)

T11 DMA REGISTERS

REVISIONS		
CHK	CHANGE NO.	REV

DRN. P.HEBERT"	DATE 16-MAY-83	ENG. Rick Szmuaz	DATE 16-MAY-83
CHK R.L. Sargent	DATE 16-MAY-83	BOARD LOCATION: SHEET 1 OF 1	
DSKE:<SARGENT>PRTIRB.DRW 16-MAY-83 06:09		NEXT HIGHER ASSEMBLY:	
FIRST USED ON OPTION/MODEL: DELNA		D-UA-M7792-0-0	

TITLE: DELNA PORT MODULE (IRB)

SIZE	CODE	NUMBER	REV.
K	CS	M7792-0-IRB	A

DMCSR [DMA ENGINE CONTROL/STATUS REGISTER]

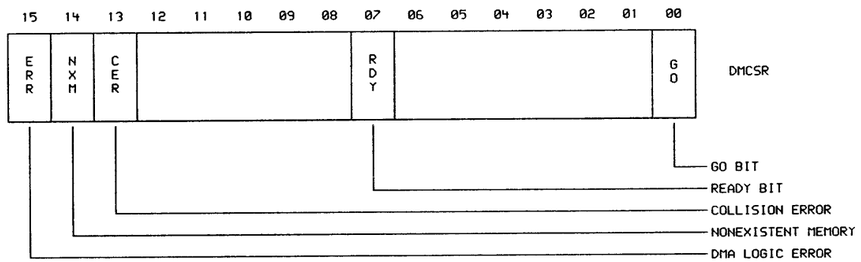

(PRTK,P)

DMA WORD COUNT REGISTER [RX DMA ENGINE WORD COUNT]

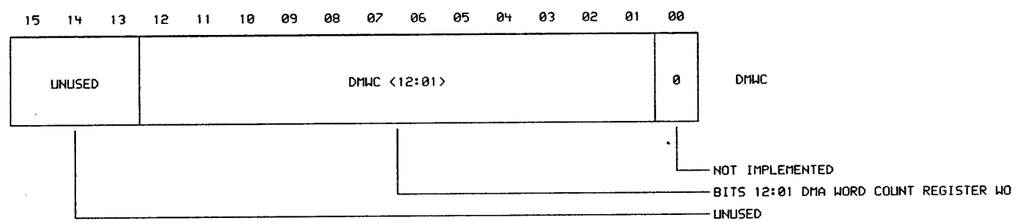

(PRTJ)

DMAF [RX DMA ENGINE LINK MEMORY ADDRESS COUNTER]
DMA-FROM ADDRESS-REGISTER

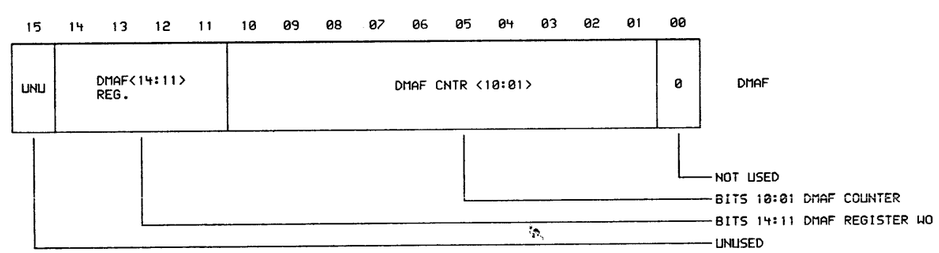

(PRTB)

DMAT0 [RX DMA ENGINE ADDRESS COUNTER]

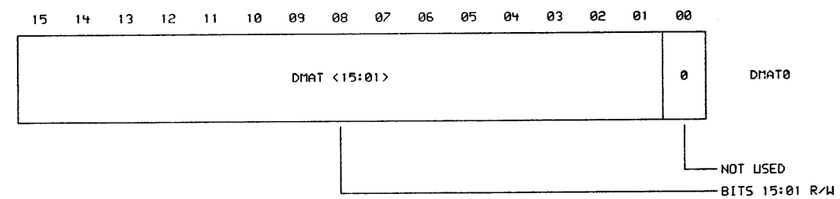

DMAT1 [RX DMA ENGINE ADDRESS COUNTER]

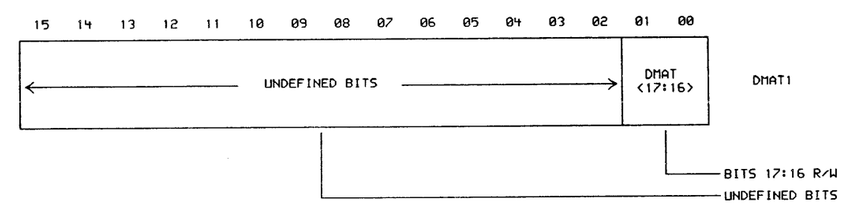

(PRTJ,K)

RX DMA ENGINE REGISTERS

REVISIONS		
CHK	CHANGE NO.	REV

DRN. PAUL HEBERT"	DATE 06-MAY-83	ENG. Rick Szmaus	DATE 06-MAY-83
CHK'D.	DATE 06-MAY-83	BOARD LOCATION: SHEET 1 OF 1	
DSKE:<SARGENT>PRTIRC.DRW 06-MAY-83 07:35		NEXT HIGHER ASSEMBLY: D-UA-M7792-0-0	
FIRST USED ON OPTION/MODEL: DELUNA			

TITLE: DELUNA PORT MODULE (IRC)

SIZE	CODE	NUMBER	REV.
K	CS	M7792-0-IRC	A

PORT SWITCHPACK REGISTER (PCSRSW)

15	14	13	12	11	10	09	08	07	06	05	04	03	02	01	00	
UND	UND	UND	SW LOE	SW BS0	SW BS1	SW A12	SW A11	SW A10	SW A09	SW A08	SW A07	SW A06	SW A05	SW A04	SW A03	PCSRSW

PCSRSW <09:00>
UNIBUS ADDRESS SWITCH
ADDRESS BITS <A12:A03>

BOOT SELECT 1

BOOT SELECT 0

LOOP ON SELF TEST ERROR SWITCH

UNDEFINED BITS <15:13>

(PRTD,K)

PORT SWITCHPACK REGISTER

REVISIONS		
CHK	CHANGE NO.	REV

DRN. P.HEBERT" DATE 06-MAY-83 ENG. Rick Szmauz DATE 06-MAY-83
CHK D. L. Sargent DATE 06-MAY-83 BOARD LOCATION: SHEET 1 OF 1
DSKE:<SARGENT>PRTIRD.DRW 06-MAY-83 07:38 NEXT HIGHER ASSEMBLY: D-UA-M7792-0-0
FIRST USED ON OPTION/MODEL: DEUNA

TITLE: DEUNA PORT MODULE (IRD)

SIZE	CODE	NUMBER	REV.
K	CS	M7792-0-IRD	A

RX STATE MACHINE LINK MEMORY ADDRESS COUNTER (LINK RECEIVE ADDRESS COUNTER)

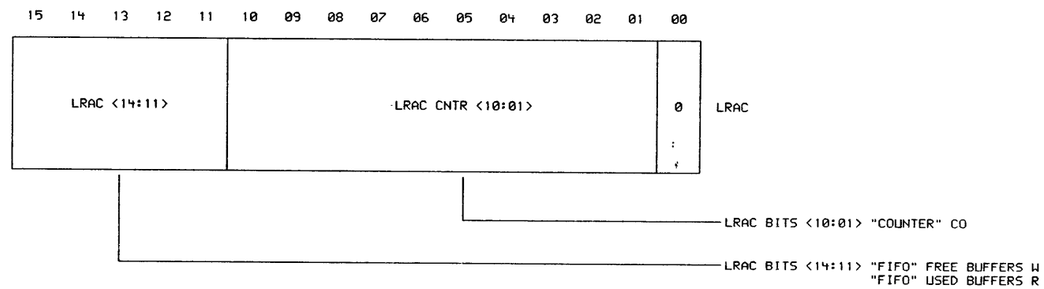

CO=CLEAR ONLY

TX STATE MACHINE LINK MEMORY ADDRESS COUNTER (LTAC)

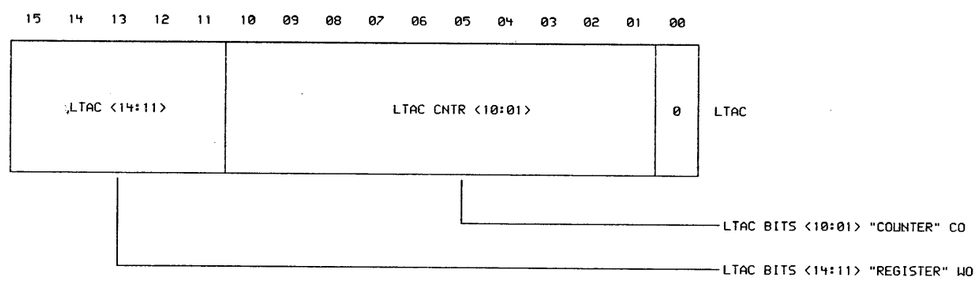

(PRTB)

LINK MEMORY ADDRESS COUNTERS

REVISIONS		
CHK	CHANGE NO.	REV

DRN. PAUL HEBERT"	DATE 06-MAY-83	ENG. Rick Szmauz	DATE 06-MAY-83
CHK'D.	DATE 06-MAY-83	BOARD LOCATION:	
		SHEET 1 OF 1	
DSKE:<SARGENT>PRTIRE.DRW	06-MAY-83 08:58	NEXT HIGHER ASSEMBLY:	
FIRST USED ON OPTION/MODEL: DELUNA		D-UA-M7792-0-0	

TITLE: DELUNA PORT MODULE (IRE)

SIZE	CODE	NUMBER	REV.
K	CS	M7792-0-IRE	A

T11 ADDRESS SPACE

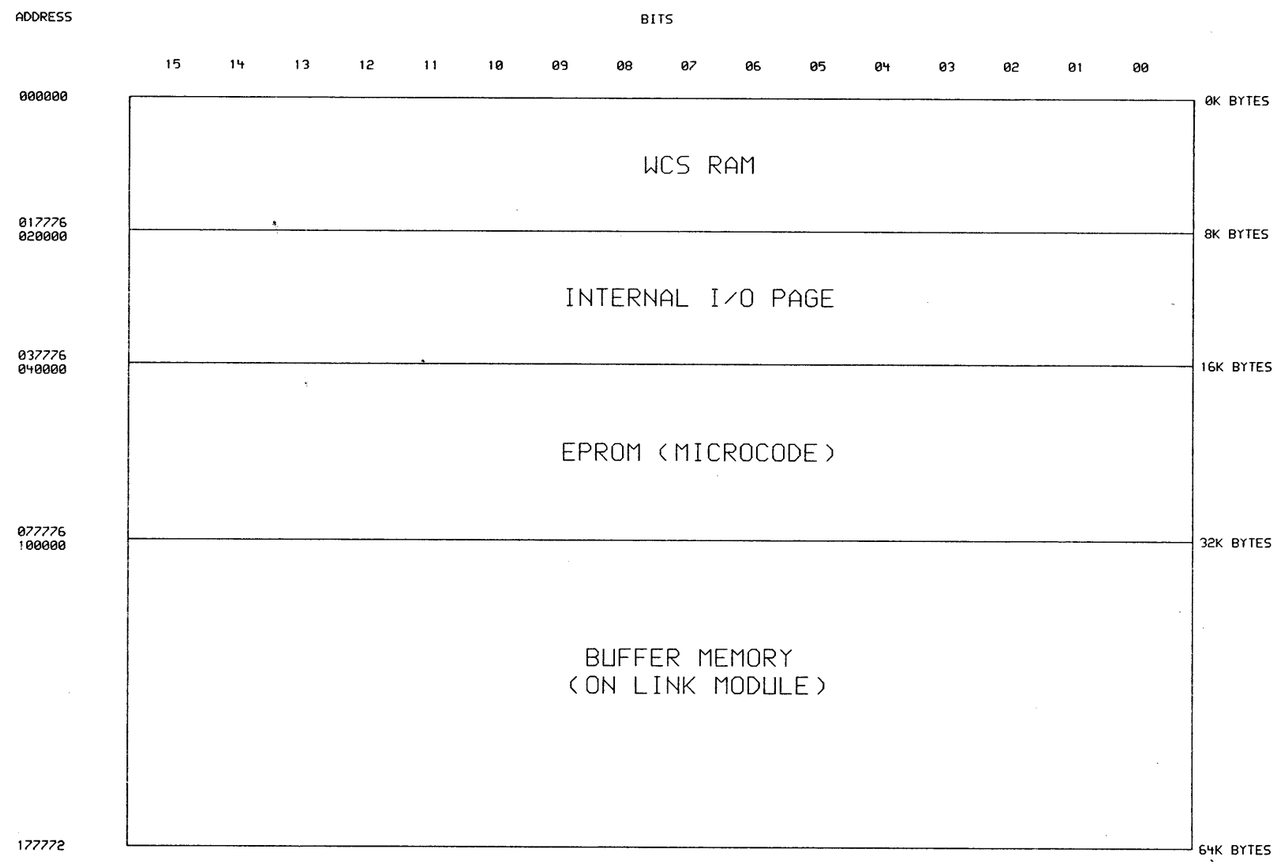

(T11 - PRTE)

REVISIONS		
CHK	CHANGE NO.	REV

DRN. P.HEBERT" DATE 16-MAY-83 ENG. Rick Szmauz DATE 16-MAY-83
CHKD. R.Sargent DATE 16-MAY-83 BOARD LOCATION: SHEET 1 OF 1
DSKE:<SARGENT>PRTLSM.DRW 16-MAY-83 10:20 NEXT HIGHER ASSEMBLY: D-UA-M7792-0-0
FIRST USED ON OPTION/MODEL: DELUNA

TITLE: DELUNA PORT MODULE (LSM)

SIZE	CODE	NUMBER	REV.
K	CS	M7792-0-LSM	A

SIZE	CODE	NUMBER	REV.
K	CS	M7792-0-PRTA	A

LINK MEMORY ADDRESS MUX		
SEL2	SEL1	LINK MEMORY A(14:01)
0	0	RX DMA ENGINE
0	1	TX STATE MACHINE
1	0	RX STATE MACHINE
1	1	T11 MICROPROCESSOR

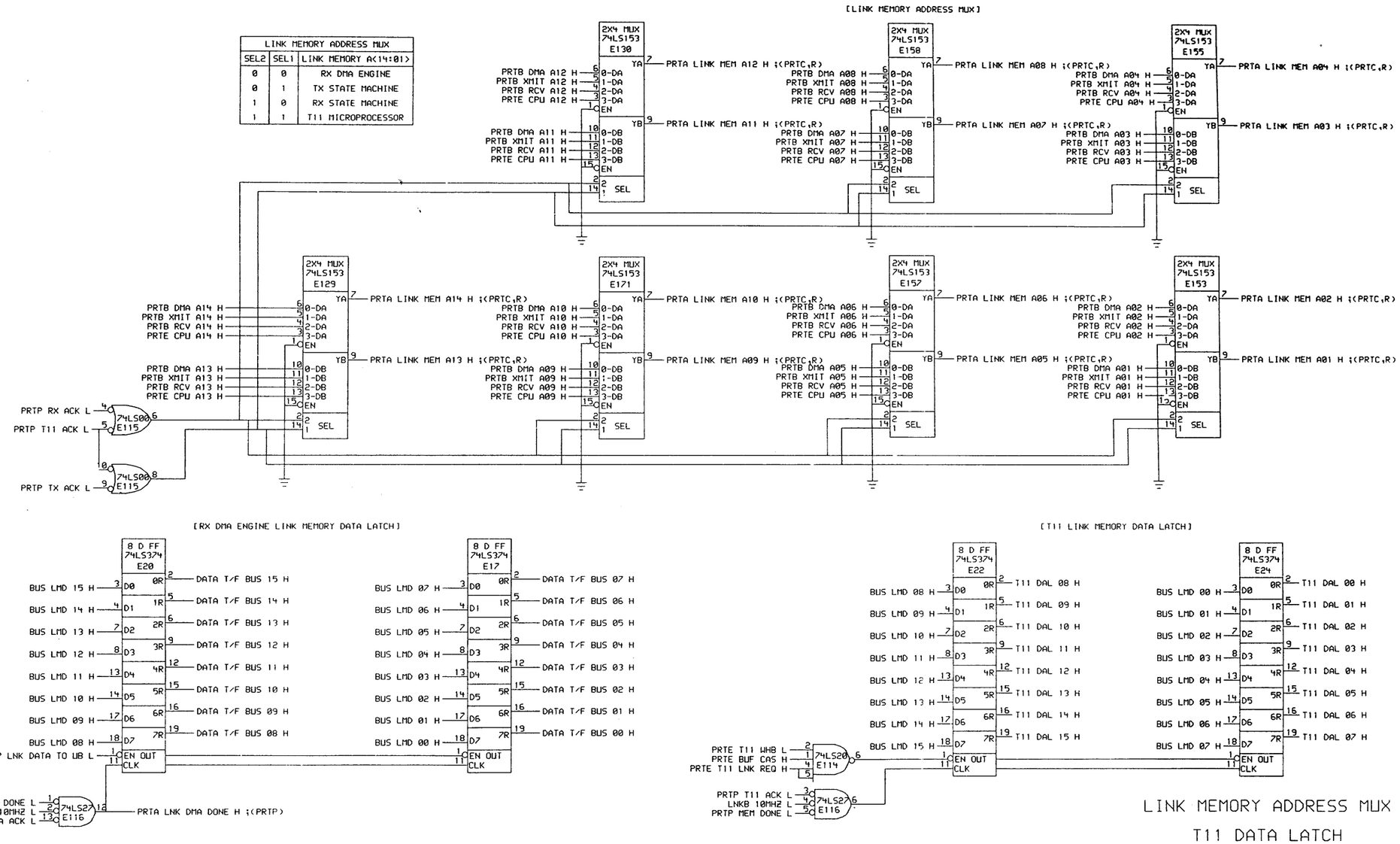

REVISIONS		
CHK	CHANGE NO.	REV

DRN: R.S. Sargent DATE 24-MAY-83 ENG. Rick Szmauz DATE 24-MAY-83
CHK'D. Tom Walsh DATE 24-MAY-83 BOARD LOCATION: SHEET 1 OF 1
DSKE:<SARGENT>PRTAA.DRW 16-MAY-83 06:28 NEXT HIGHER ASSEMBLY: D-UA-M7792-0-0
FIRST USED ON OPTION/MODEL: DELUNA

TITLE: DELUNA PORT MODULE (PRTA)

SIZE	CODE	NUMBER	REV.
K	CS	M7792-0-PRTA	A

SARGENT, DSKE:<SARGENT>PRTAA.DPL.1, SCALE 2, "D" RELEASE BOX, SIGNED OFF

TW

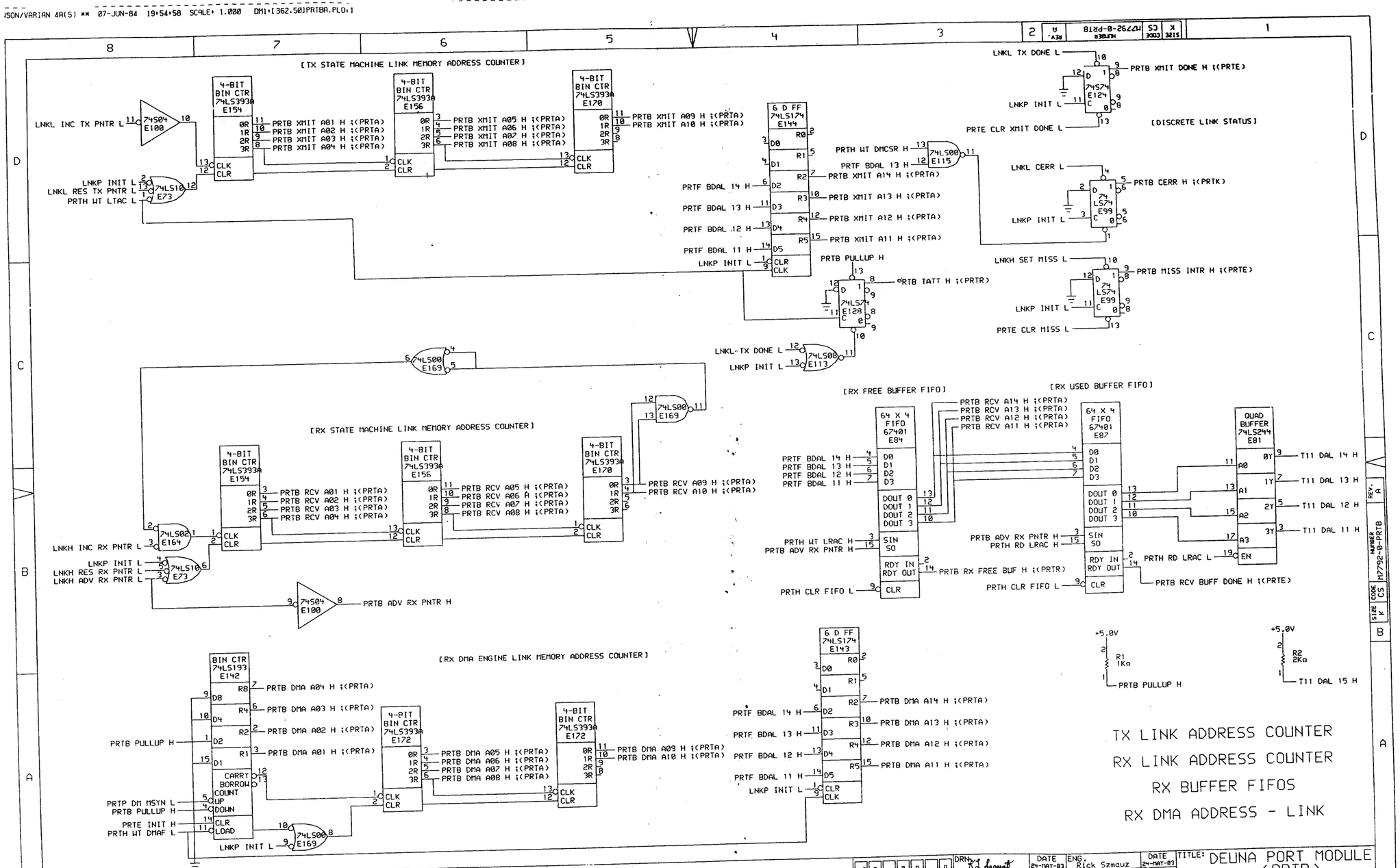

REVISIONS		
CHK	CHANGE NO.	REV

DSKE:<SARGENT>PRTBA.DRW 16-MAY-83 11:20

FIRST USED ON OPTION/MODEL: DEUNA

DRN.	DATE 24-MAY-83	ENG. Rick Szmauz	DATE 24-MAY-83
CHK'D. Tom Walsh	DATE 24-MAY-83	BOARD LOCATION: SHEET 1 OF 1	
		NEXT HIGHER ASSEMBLY: D-UA-M7792-0-0	

TITLE: DEUNA PORT MODULE (PRTB)

SIZE	CODE	NUMBER	REV.
K	CS	M7792-0-PRTB	A

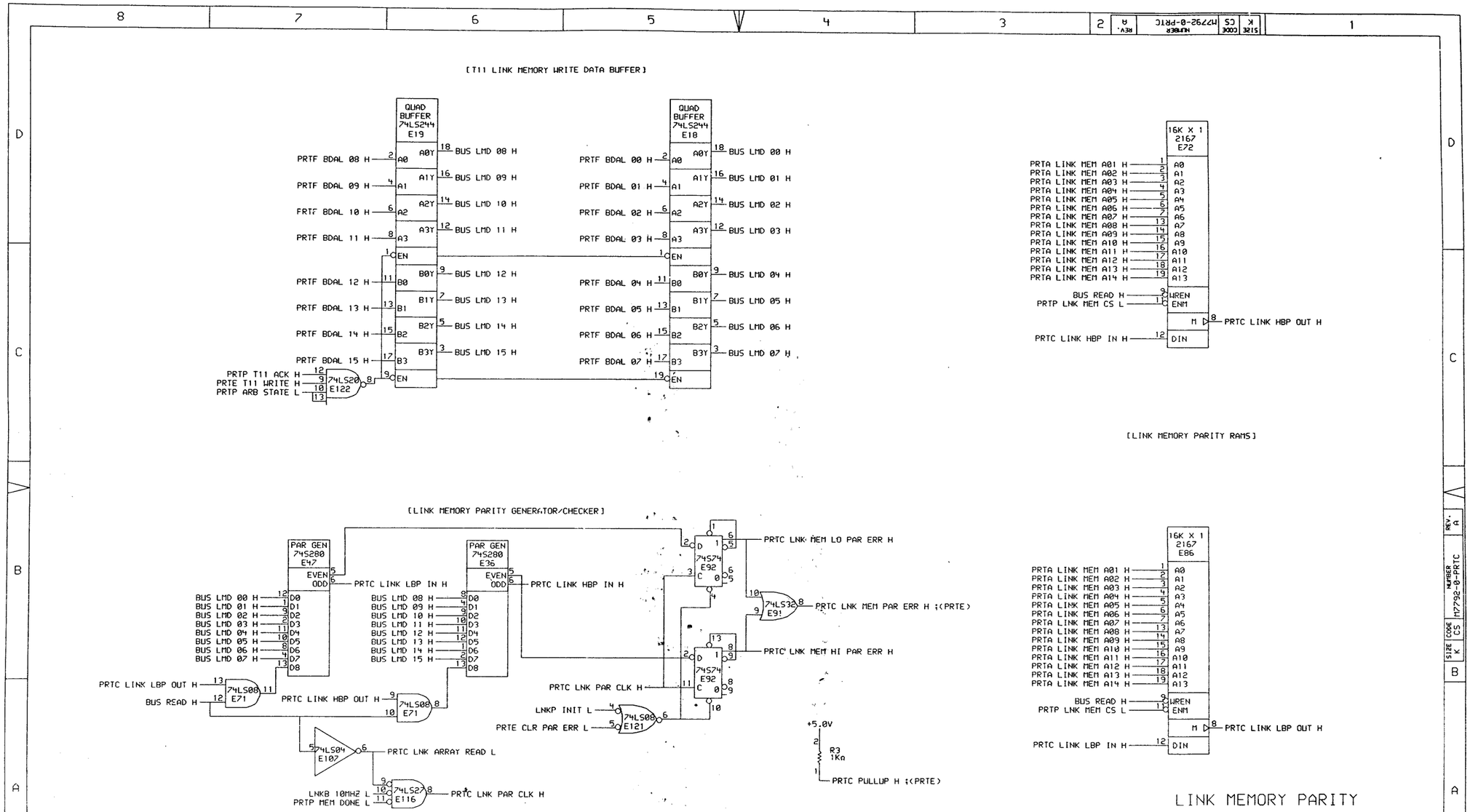

REVISIONS		
CHK	CHANGE NO.	REV

digital

DRN: [signature] DATE 24-MAY-83
CHK'D. Tom Walsh DATE 24-MAY-83
ENG. Rick Szmauz DATE 24-MAY-83
BOARD LOCATION:
SHEET 1 OF 1
DSKE:<SARGENT>PRTCA.DRW 16-MAY-83 11:20
NEXT HIGHER ASSEMBLY: D-UA-M7792-0-0
FIRST USED ON OPTION/MODEL: DELUNA

TITLE: DELUNA PORT MODULE (PRTC)

SIZE	CODE	NUMBER	REV.
K	CS	M7792-0-PRTC	A

SARGENT, DSKE:<SARGENT>PRTCA.DPL.1, SCALE 2, "D" RELEASE BOX, SIGNED OFF

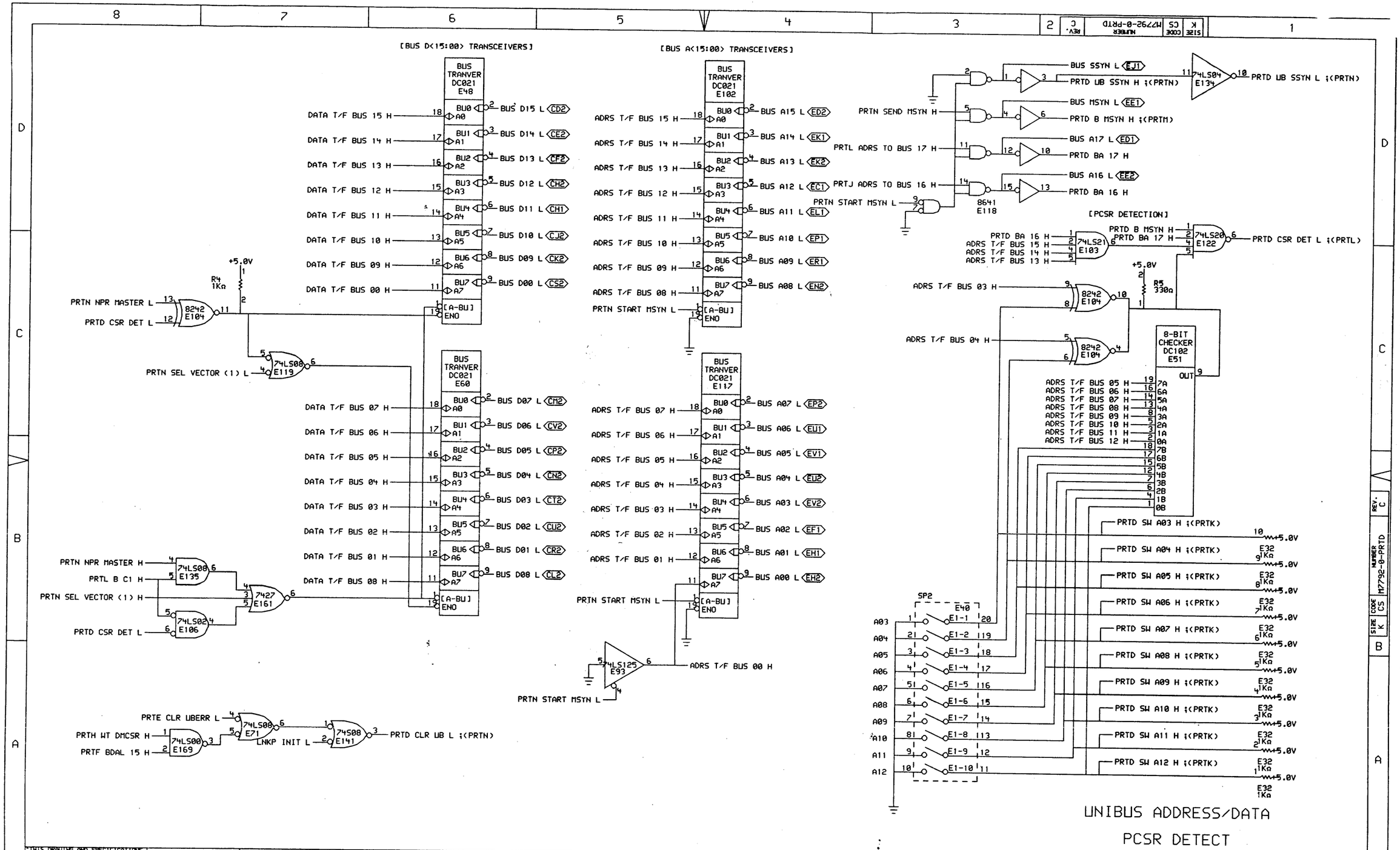

REVISIONS		
CHK	CHANGE NO.	REV

digital

DSKE:<SARGENT>PRTDC.DRW 06-MAY-83 06:58

FIRST USED ON OPTION/MODEL: DELUNA

DRN.	DATE 06-MAY-83	ENG. Rick Szmauz	DATE 06-MAY-83
CHK'D. Tom Walsh	DATE 06-MAY-83	BOARD LOCATION: SHEET 1 OF 1	
NEXT HIGHER ASSEMBLY: D-UA-M7792-0-0			

TITLE: DELUNA PORT MODULE (PRTD)

SIZE	CODE	NUMBER	REV.
K	CS	M7792-0-PRTD	C

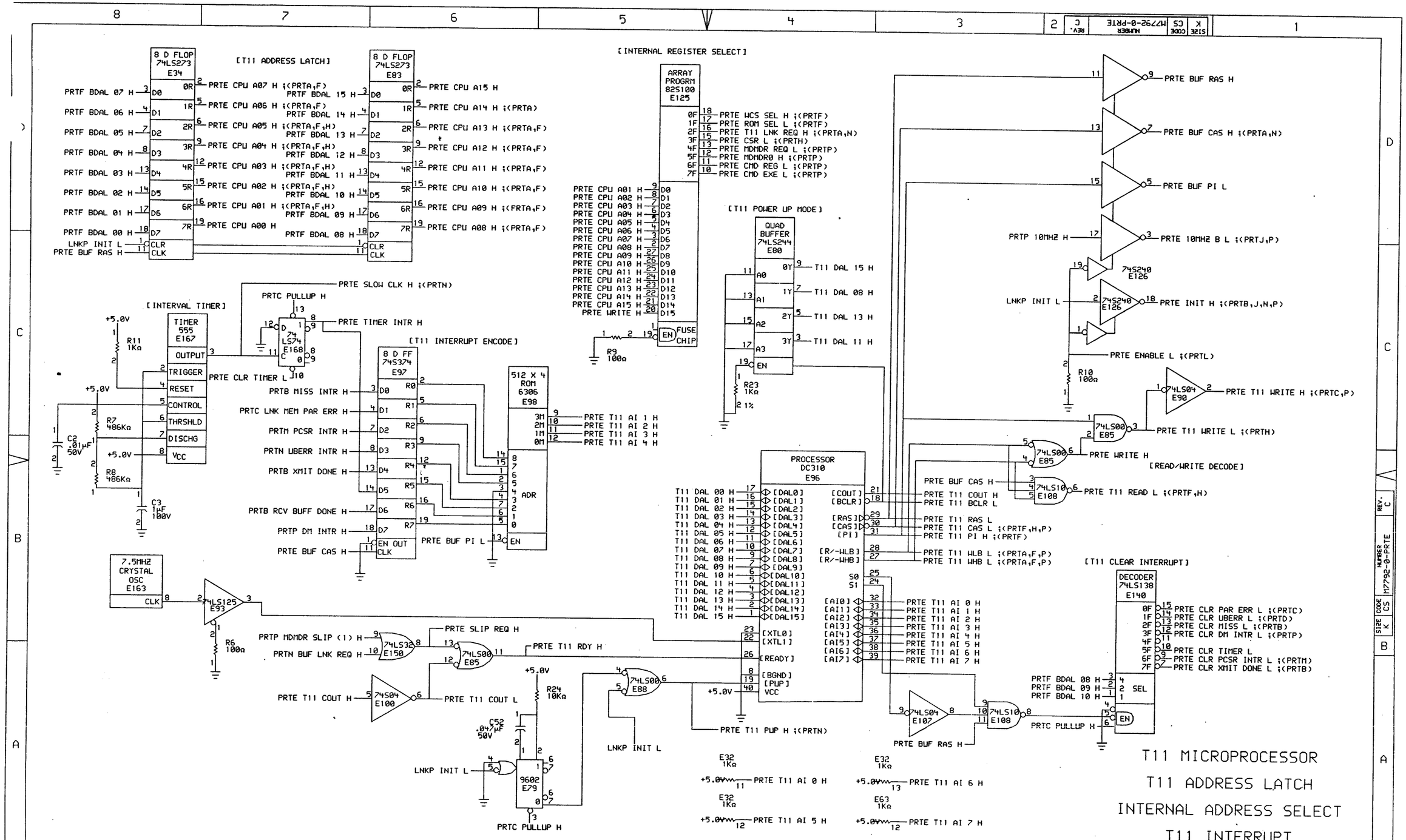

REVISIONS		
CHK	CHANGE NO.	REV

DSKE:<SARGENT>PRTEC.DRW 06-MAY-83 07:09
FIRST USED ON OPTION/MODEL: DEUNA

DRN. [illegible] DATE 06-MAY-83
CHK'D. Tom Walsh DATE 06-MAY-83
ENG. Rick Szmauz DATE 06-MAY-83
BOARD LOCATION:
SHEET 1 OF 1
NEXT HIGHER ASSEMBLY: D-UA-M7792-0-0

TITLE: DEUNA PORT MODULE (PRTE)

SIZE	CODE	NUMBER	REV.
K	CS	M7792-0-PRTE	C

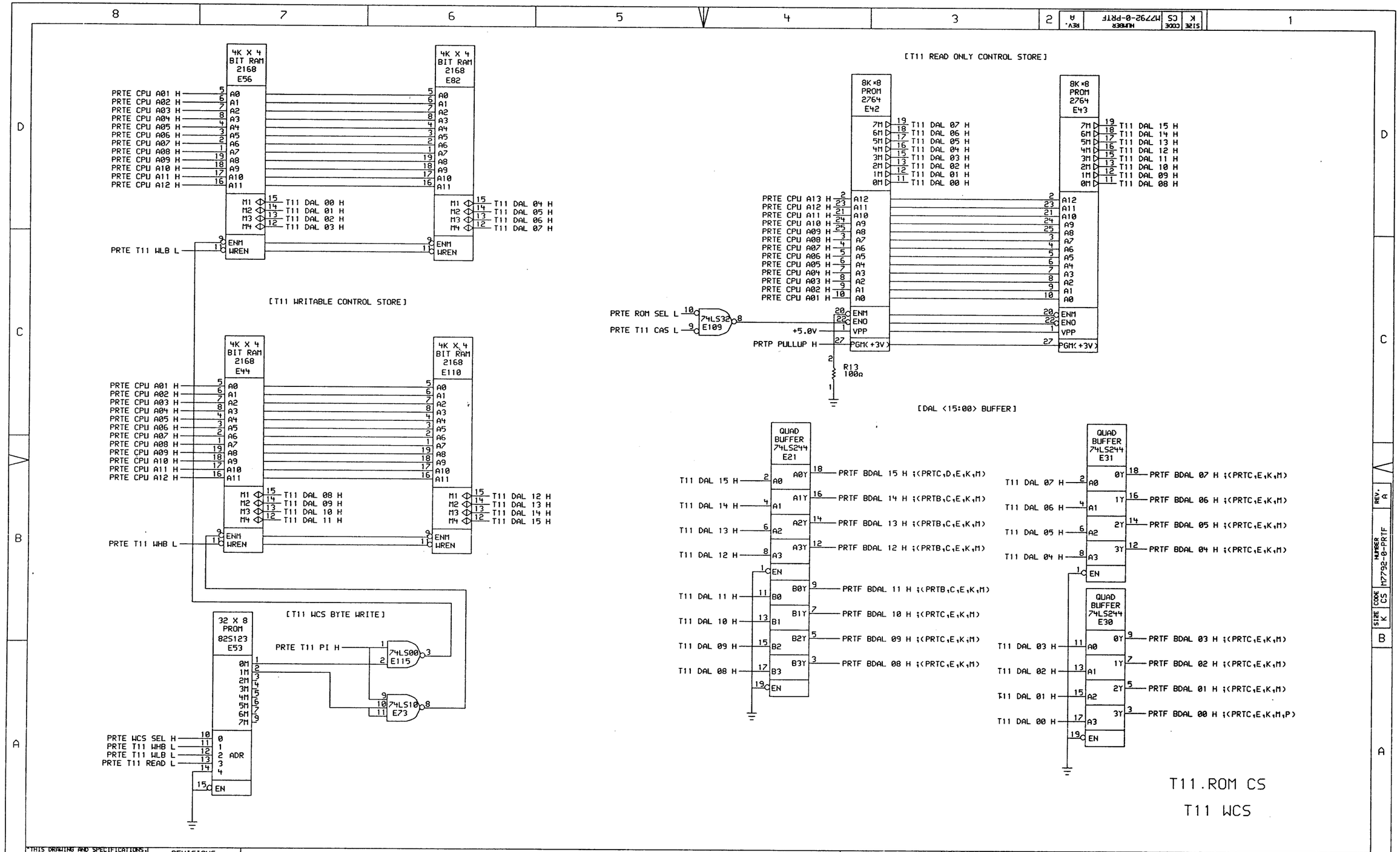

"THIS DRAWING AND SPECIFICATIONS, HEREIN, ARE THE PROPERTY OF DIGITAL EQUIPMENT CORPORATION AND SHALL NOT BE REPRODUCED OR COPIED OR USED IN WHOLE OR IN PART AS THE BASIS FOR THE MANUFACTURE OR SALE OF ITEMS WITHOUT WRITTEN PERMISSION. COPYRIGHT © 1983, DIGITAL EQUIPMENT CORPORATION"

REVISIONS		
CHK	CHANGE NO.	REV

digital

DRN: K. Sargent — DATE 24-MAY-83 — ENG. Rick Szmauz — DATE 24-MAY-83

CHK: D. Tom Walsh — DATE 24-MAY-83 — BOARD LOCATION: — SHEET 1 OF 1

DSKE:<SARGENT>PRTFA.DRW 16-MAY-83 07:44 — NEXT HIGHER ASSEMBLY: D-UA-M7792-0-0

FIRST USED ON OPTION/MODEL: DELUNA

TITLE: DELUNA PORT MODULE (PRTF)

SIZE	CODE	NUMBER	REV.
K	CS	M7792-0-PRTF	A

TW

SARGENT, DSKE:<SARGENT>PRTFA.DPL.1, SCALE 2, "D" RELEASE BOX, SIGNED OFF

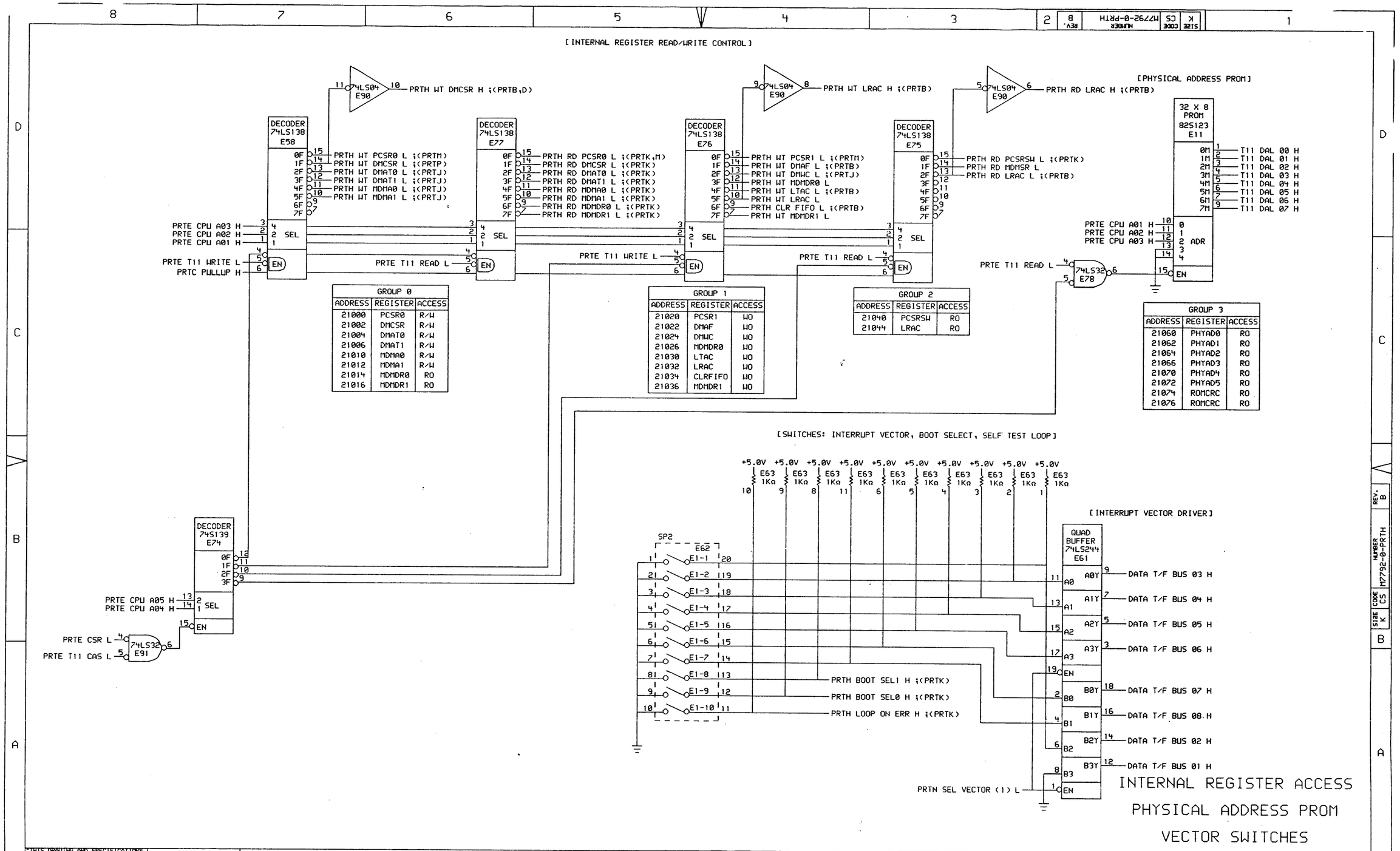

REVISIONS		
CHK	CHANGE NO.	REV

DRN. 16-MAY-83 | ENG. Rick Szmauz 16-MAY-83 | TITLE: DELUNA PORT MODULE (PRTH)

CHK'D. Tom Walsh 16-MAY-83 | BOARD LOCATION: | SHEET 1 OF 1

DSKE:<SARGENT>PRTHB.DRW 16-MAY-83 06:48 | NEXT HIGHER ASSEMBLY: | SIZE K | CODE CS | NUMBER M7792-0-PRTH | REV. B

FIRST USED ON OPTION/MODEL: DELUNA | D-UA-M7792-0-0

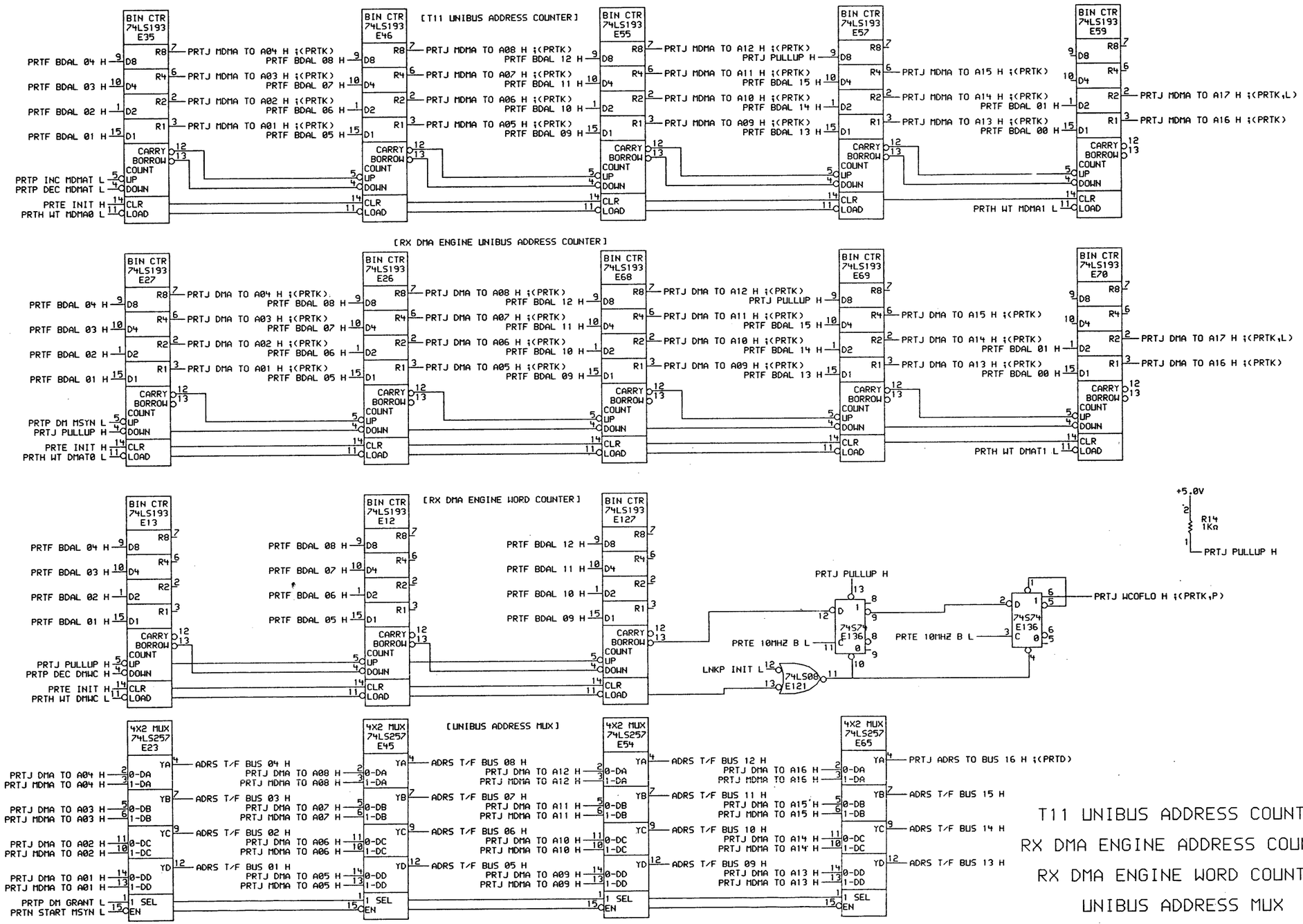

UNIBUS ADDRESS MUX	
SEL1	ADRS T/F BUS <16:01>
0	RX DMA ENGINE
1	T11

REVISIONS		
CHK	CHANGE NO.	REV

DRN: K. Sargent — DATE 12-MAY-83 — ENG. Rick Szmauz — DATE 12-MAY-83
CHK: D. Tom Walsh — DATE 12-MAY-83 — BOARD LOCATION: — SHEET 1 OF 1
DSKE:<SARGENT>PRTJB.DRW 12-MAY-83 08:32 — NEXT HIGHER ASSEMBLY: D-UA-M7792-0-0
FIRST USED ON OPTION/MODEL: DELUNA

TITLE: DELUNA PORT MODULE (PRTJ)

SIZE	CODE	NUMBER	REV.
K	CS	M7792-0-PRTJ	B

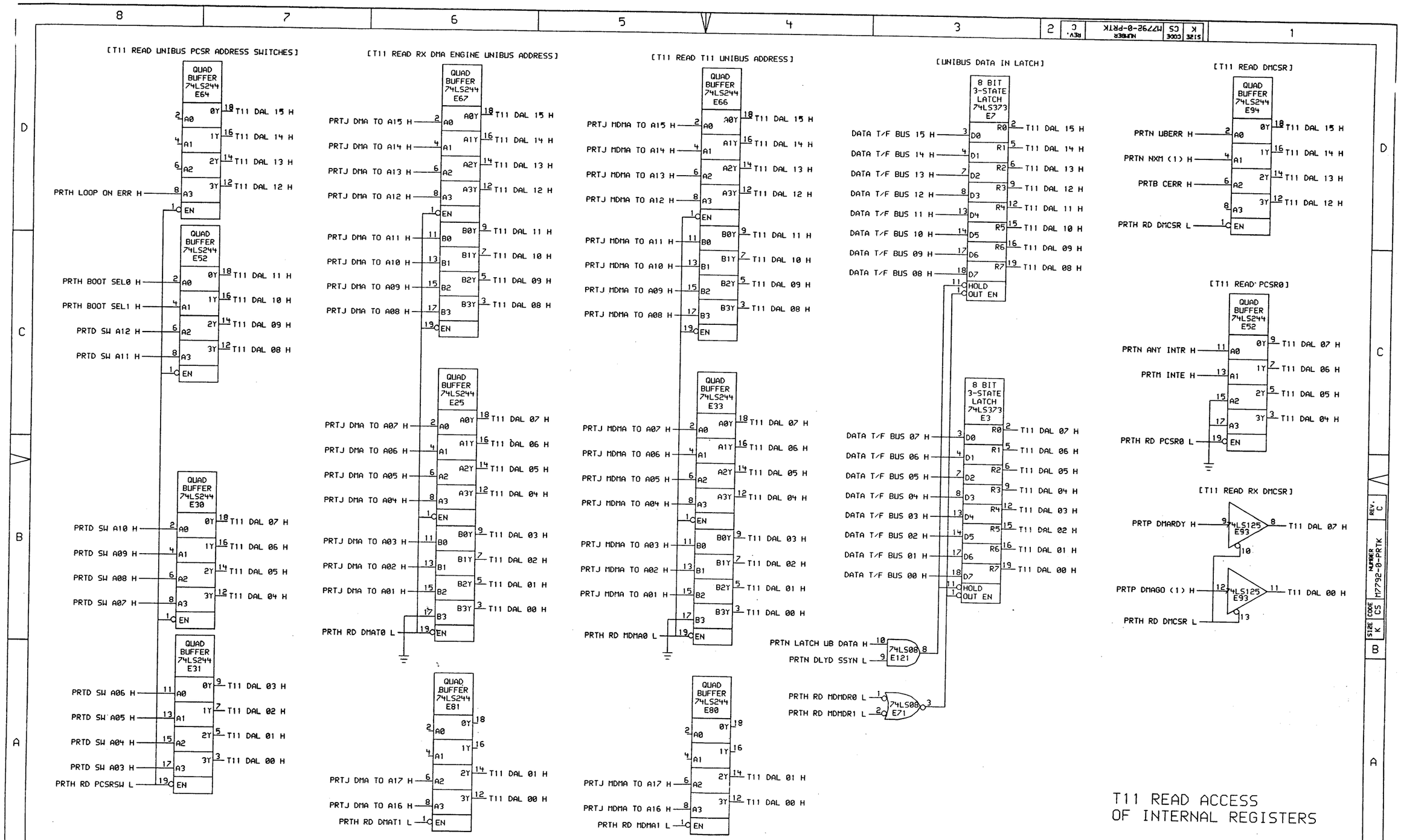
[T11 READ UNIBUS PCSR ADDRESS SWITCHES]
QUAD BUFFER 74LS244 E64
PRTH LOOP ON ERR H
T11 DAL 15 H
T11 DAL 14 H
T11 DAL 13 H
T11 DAL 12 H
QUAD BUFFER 74LS244 E52
PRTH BOOT SEL0 H
PRTH BOOT SEL1 H
PRTD SW A12 H
PRTD SW A11 H
T11 DAL 11 H
T11 DAL 10 H
T11 DAL 09 H
T11 DAL 08 H
QUAD BUFFER 74LS244 E30
PRTD SW A10 H
PRTD SW A09 H
PRTD SW A08 H
PRTD SW A07 H
T11 DAL 07 H
T11 DAL 06 H
T11 DAL 05 H
T11 DAL 04 H
QUAD BUFFER 74LS244 E31
PRTD SW A06 H
PRTD SW A05 H
PRTD SW A04 H
PRTD SW A03 H
PRTH RD PCSRSW L
T11 DAL 03 H
T11 DAL 02 H
T11 DAL 01 H
T11 DAL 00 H
[T11 READ RX DMA ENGINE UNIBUS ADDRESS]
QUAD BUFFER 74LS244 E67
PRTJ DMA TO A15 H
PRTJ DMA TO A14 H
PRTJ DMA TO A13 H
PRTJ DMA TO A12 H
T11 DAL 15 H
T11 DAL 14 H
T11 DAL 13 H
T11 DAL 12 H
PRTJ DMA TO A11 H
PRTJ DMA TO A10 H
PRTJ DMA TO A09 H
PRTJ DMA TO A08 H
T11 DAL 11 H
T11 DAL 10 H
T11 DAL 09 H
T11 DAL 08 H
QUAD BUFFER 74LS244 E25
PRTJ DMA TO A07 H
PRTJ DMA TO A06 H
PRTJ DMA TO A05 H
PRTJ DMA TO A04 H
T11 DAL 07 H
T11 DAL 06 H
T11 DAL 05 H
T11 DAL 04 H
PRTJ DMA TO A03 H
PRTJ DMA TO A02 H
PRTJ DMA TO A01 H
PRTH RD DMAT0 L
T11 DAL 03 H
T11 DAL 02 H
T11 DAL 01 H
T11 DAL 00 H
QUAD BUFFER 74LS244 E81
PRTJ DMA TO A17 H
PRTJ DMA TO A16 H
PRTH RD DMAT1 L
T11 DAL 01 H
T11 DAL 00 H
[T11 READ T11 UNIBUS ADDRESS]
QUAD BUFFER 74LS244 E66
PRTJ MDMA TO A15 H
PRTJ MDMA TO A14 H
PRTJ MDMA TO A13 H
PRTJ MDMA TO A12 H
T11 DAL 15 H
T11 DAL 14 H
T11 DAL 13 H
T11 DAL 12 H
PRTJ MDMA TO A11 H
PRTJ MDMA TO A10 H
PRTJ MDMA TO A09 H
PRTJ MDMA TO A08 H
T11 DAL 11 H
T11 DAL 10 H
T11 DAL 09 H
T11 DAL 08 H
QUAD BUFFER 74LS244 E33
PRTJ MDMA TO A07 H
PRTJ MDMA TO A06 H
PRTJ MDMA TO A05 H
PRTJ MDMA TO A04 H
T11 DAL 07 H
T11 DAL 06 H
T11 DAL 05 H
T11 DAL 04 H
PRTJ MDMA TO A03 H
PRTJ MDMA TO A02 H
PRTJ MDMA TO A01 H
PRTH RD MDMA0 L
T11 DAL 03 H
T11 DAL 02 H
T11 DAL 01 H
T11 DAL 00 H
QUAD BUFFER 74LS244 E80
PRTJ MDMA TO A17 H
PRTJ MDMA TO A16 H
PRTH RD MDMA1 L
T11 DAL 01 H
T11 DAL 00 H
[UNIBUS DATA IN LATCH]
8 BIT 3-STATE LATCH 74LS373 E7
DATA T/F BUS 15 H
DATA T/F BUS 14 H
DATA T/F BUS 13 H
DATA T/F BUS 12 H
DATA T/F BUS 11 H
DATA T/F BUS 10 H
DATA T/F BUS 09 H
DATA T/F BUS 08 H
T11 DAL 15 H
T11 DAL 14 H
T11 DAL 13 H
T11 DAL 12 H
T11 DAL 11 H
T11 DAL 10 H
T11 DAL 09 H
T11 DAL 08 H
HOLD
OUT EN
8 BIT 3-STATE LATCH 74LS373 E3
DATA T/F BUS 07 H
DATA T/F BUS 06 H
DATA T/F BUS 05 H
DATA T/F BUS 04 H
DATA T/F BUS 03 H
DATA T/F BUS 02 H
DATA T/F BUS 01 H
DATA T/F BUS 00 H
T11 DAL 07 H
T11 DAL 06 H
T11 DAL 05 H
T11 DAL 04 H
T11 DAL 03 H
T11 DAL 02 H
T11 DAL 01 H
T11 DAL 00 H
HOLD
OUT EN
PRTN LATCH UB DATA H
PRTN DLYD SSYN L
74LS08 E121
PRTH RD MDMDR0 L
PRTH RD MDMDR1 L
74LS08 E71
[T11 READ DMCSR]
QUAD BUFFER 74LS244 E94
PRTN UBERR H
PRTN NXM (1) H
PRTB CERR H
PRTH RD DMCSR L
T11 DAL 15 H
T11 DAL 14 H
T11 DAL 13 H
T11 DAL 12 H
[T11 READ PCSR0]
QUAD BUFFER 74LS244 E52
PRTN ANY INTR H
PRTM INTE H
PRTH RD PCSR0 L
T11 DAL 07 H
T11 DAL 06 H
T11 DAL 05 H
T11 DAL 04 H
[T11 READ RX DMCSR]
PRTP DMARDY H
74LS125 E93
T11 DAL 07 H
PRTP DMAGO (1) H
74LS125 E93
T11 DAL 00 H
PRTH RD DMCSR L
T11 READ ACCESS
OF INTERNAL REGISTERS
"THIS DRAWING AND SPECIFICATIONS, HEREIN, ARE THE PROPERTY OF DIGITAL EQUIPMENT CORPORATION AND SHALL NOT BE REPRODUCED OR COPIED OR USED IN WHOLE OR IN PART AS THE BASIS FOR THE MANUFACTURE OR SALE OF ITEMS WITHOUT WRITTEN PERMISSION. COPYRIGHT © 1983, DIGITAL EQUIPMENT CORPORATION"
REVISIONS
CHK CHANGE NO. REV
digital
DRN
DATE 16-MAY-83
ENG. Rick Szmauz
DATE 16-MAY-83
CHK D. Tom Walsh
DATE 16-MAY-83
BOARD LOCATION:
SHEET 1 OF 1
DSKE:<SARGENT>PRTKC.DRW 16-MAY-83 06:55
NEXT HIGHER ASSEMBLY:
FIRST USED ON OPTION/MODEL: DELUNA
D-UA-M7792-0-0
TITLE: DELUNA PORT MODULE (PRTK)
SIZE K
CODE CS
NUMBER M7792-0-PRTK
REV. C

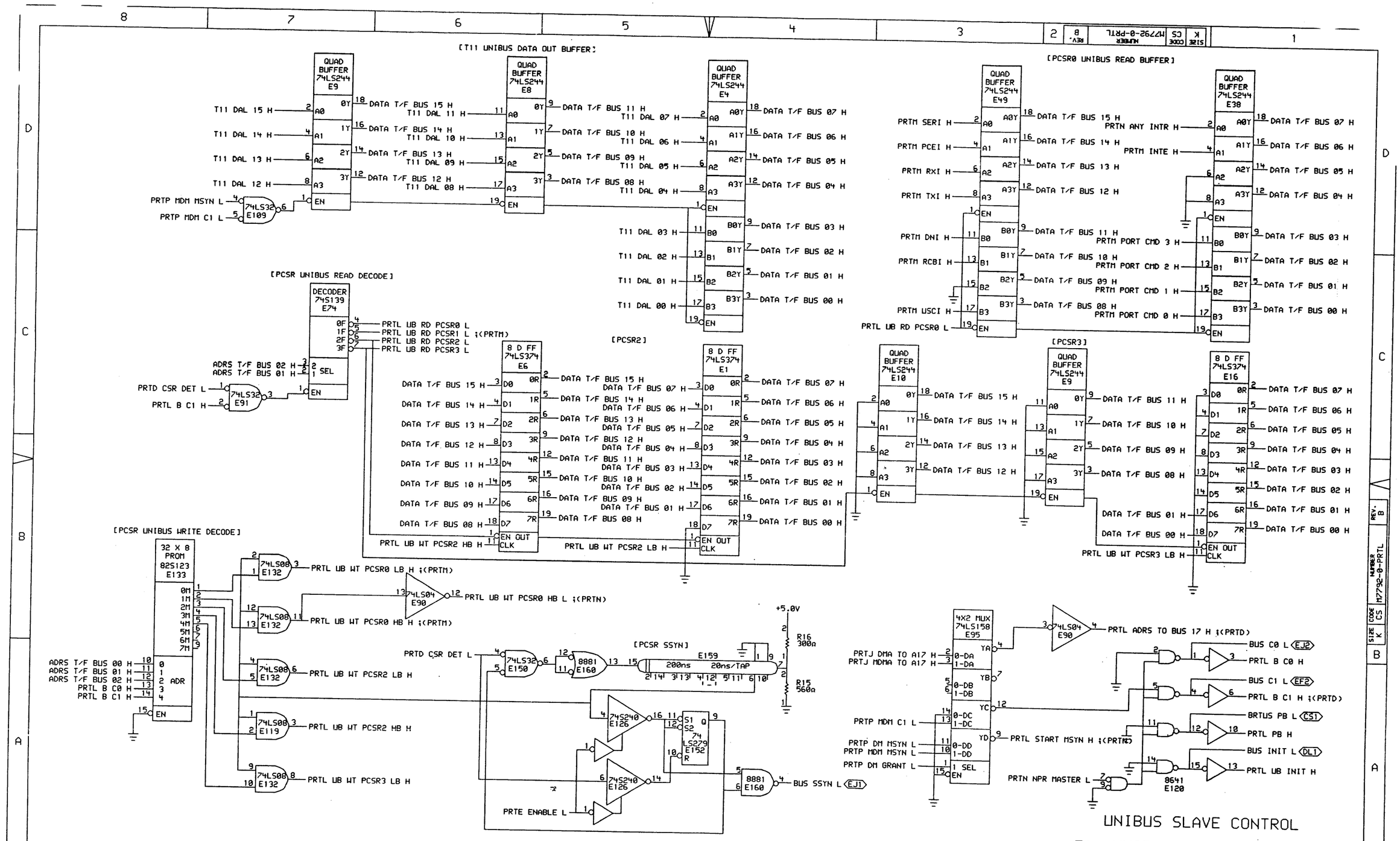

SARGENT, DSKE:<SARGENT>PRTLB.DPL.1, SCALE 2, "D" RELEASE BOX, SIGNED OFF

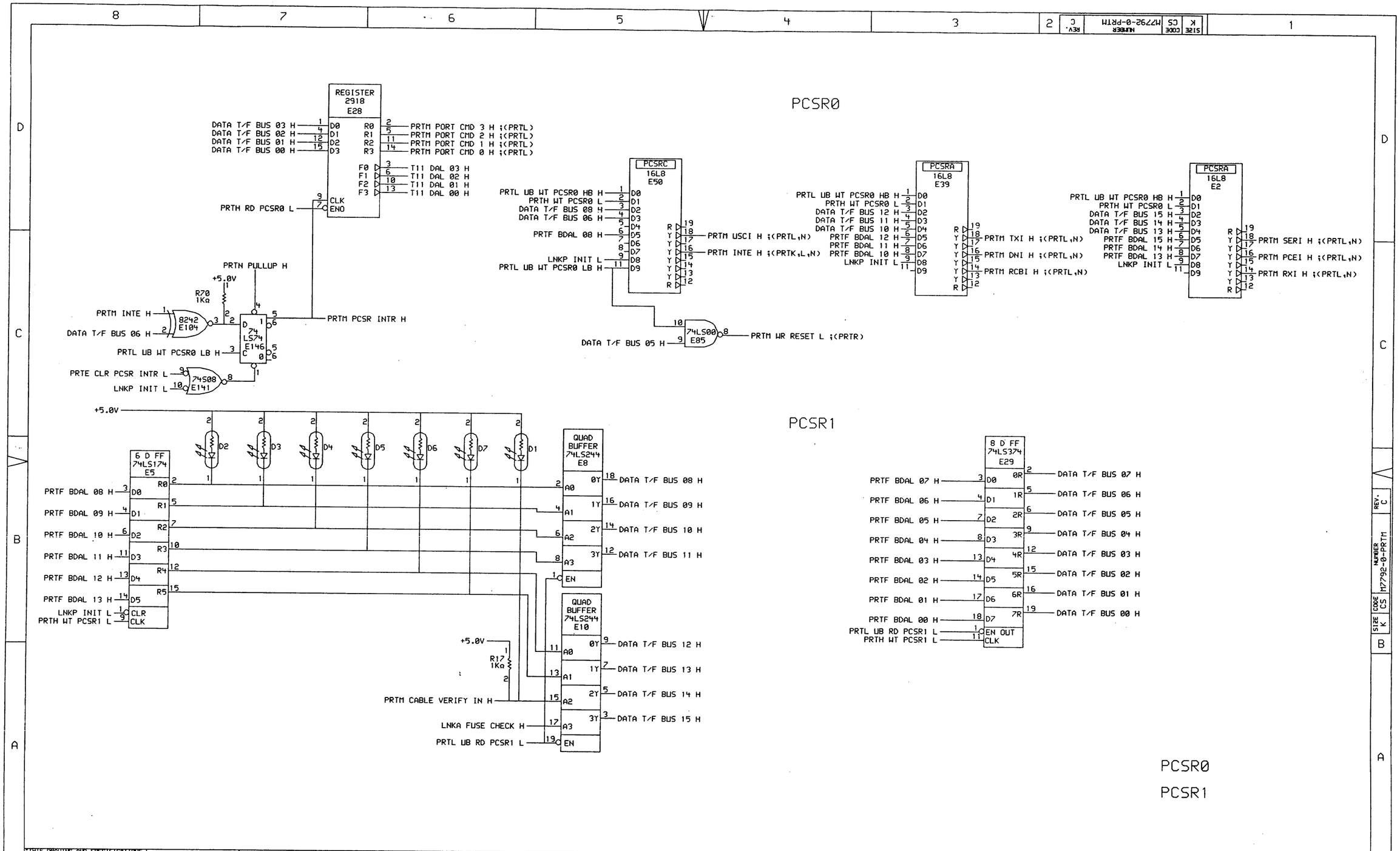

REVISIONS		
CHK	CHANGE NO.	REV

DRN: Ted Sargent DATE 12-MAY-83 ENG. Rick Szmauz DATE 12-MAY-83
CHK: D. Tom Walsh DATE 12-MAY-83 BOARD LOCATION: SHEET 1 OF 1
DSKE:<SARGENT>PRTMC.DRW 12-MAY-83 09:05 NEXT HIGHER ASSEMBLY:
FIRST USED ON OPTION/MODEL: DELNA D-UA-M7792-0-0

TITLE: DELNA PORT MODULE (PRTM)

SIZE	CODE	NUMBER	REV.
K	CS	M7792-0-PRTM	C

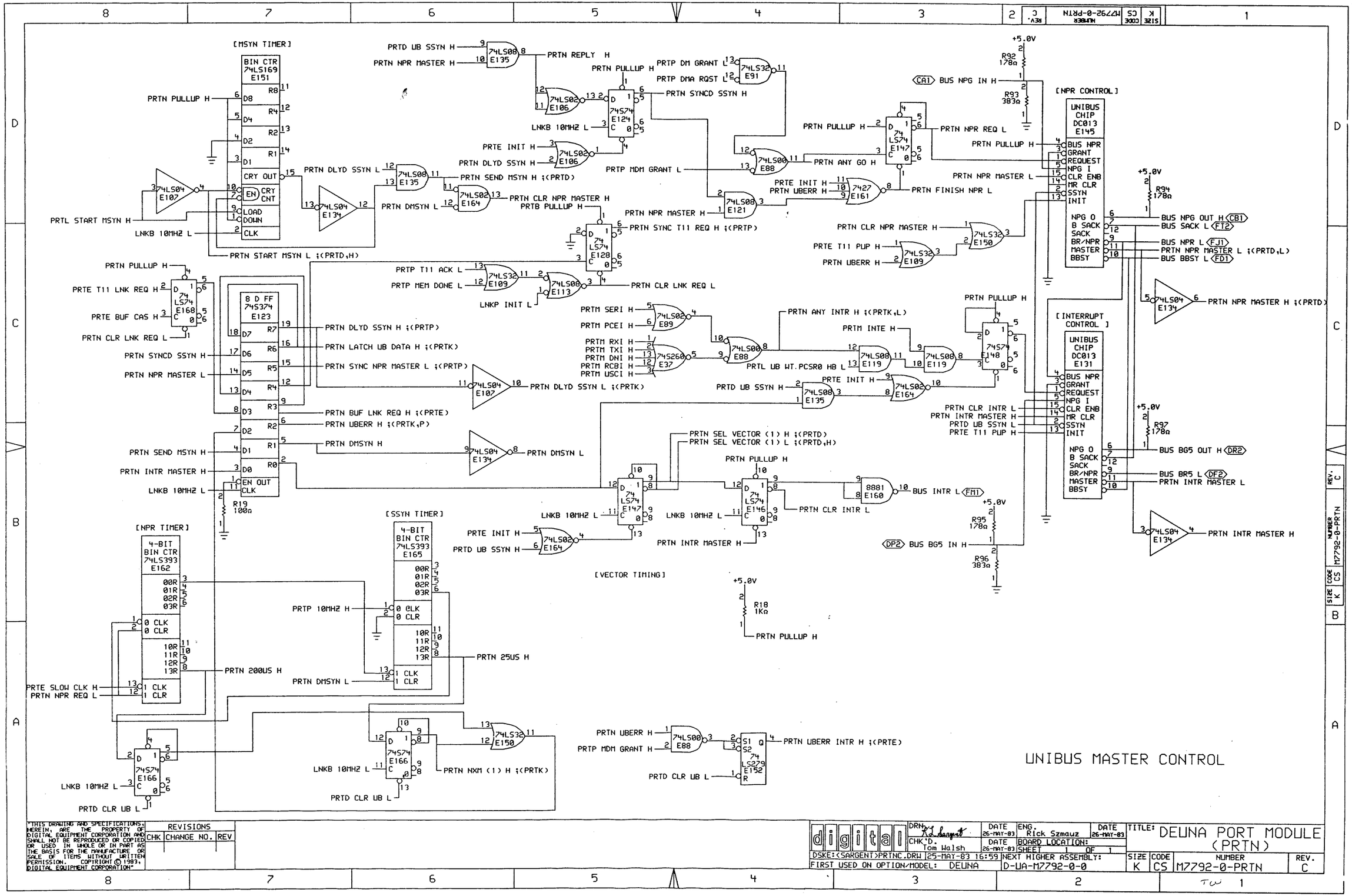
[MSYN TIMER]
BIN CTR 74LS169 E151
[NPR TIMER]
4-BIT BIN CTR 74LS393 E162
[SSYN TIMER]
4-BIT BIN CTR 74LS393 E165
8 D FF 74S374 E123
[NPR CONTROL]
UNIBUS CHIP DC013 E145
[INTERRUPT CONTROL]
UNIBUS CHIP DC013 E131
[VECTOR TIMING]
PRTN START MSYN L ;(PRTD,H)
PRTN DLYD SSYN H ;(PRTP)
PRTN LATCH UB DATA H ;(PRTK)
PRTN SYNC NPR MASTER L ;(PRTP)
PRTN DLYD SSYN L ;(PRTK)
PRTN BUF LNK REQ H ;(PRTE)
PRTN UBERR H ;(PRTK,P)
PRTN DMSYN H
PRTN DMSYN L
PRTN SEND MSYN H ;(PRTD)
PRTN CLR NPR MASTER H
PRTB PULLUP H
PRTN SYNC T11 REQ H ;(PRTP)
PRTN CLR LNK REQ L
PRTN REPLY H
PRTN SYNCD SSYN H
PRTN ANY INTR H ;(PRTK,L)
PRTL UB WT.PCSR0 HB L
PRTN SEL VECTOR (1) H ;(PRTD)
PRTN SEL VECTOR (1) L ;(PRTD,H)
PRTN CLR INTR L
BUS INTR L (FH1)
PRTN NPR REQ L
PRTN ANY GO H
PRTN FINISH NPR L
BUS NPG IN H (CA1)
BUS NPG OUT H (CB1)
BUS SACK L (FT2)
BUS NPR L (FJ1)
PRTN NPR MASTER L ;(PRTD,L)
BUS BBSY L (FD1)
PRTN NPR MASTER H ;(PRTD)
BUS BG5 OUT H (DR2)
BUS BR5 L (DF2)
PRTN INTR MASTER L
PRTN INTR MASTER H
BUS BG5 IN H (DP2)
PRTN NXM (1) H ;(PRTK)
PRTN UBERR INTR H ;(PRTE)
+5.0V
R92 178Ω
R93 383Ω
R94 178Ω
R97 178Ω
R95 178Ω
R96 383Ω
R19 100Ω
R18 1KΩ
UNIBUS MASTER CONTROL
"THIS DRAWING AND SPECIFICATIONS, HEREIN, ARE THE PROPERTY OF DIGITAL EQUIPMENT CORPORATION AND SHALL NOT BE REPRODUCED OR COPIED OR USED IN WHOLE OR IN PART AS THE BASIS FOR THE MANUFACTURE OR SALE OF ITEMS WITHOUT WRITTEN PERMISSION. COPYRIGHT © 1983, DIGITAL EQUIPMENT CORPORATION"
REVISIONS
CHK CHANGE NO. REV
DSKE:<SARGENT>PRTNC.DRW 25-MAY-83 16:59
FIRST USED ON OPTION/MODEL: DELUNA
DRN. DATE 26-MAY-83
CHK'D. Tom Walsh DATE 26-MAY-83
ENG. Rick Szmauz DATE 26-MAY-83
BOARD LOCATION:
SHEET 1 OF 1
NEXT HIGHER ASSEMBLY: D-UA-M7792-0-0
TITLE: DELUNA PORT MODULE (PRTN)
SIZE K CODE CS NUMBER M7792-0-PRTN REV. C

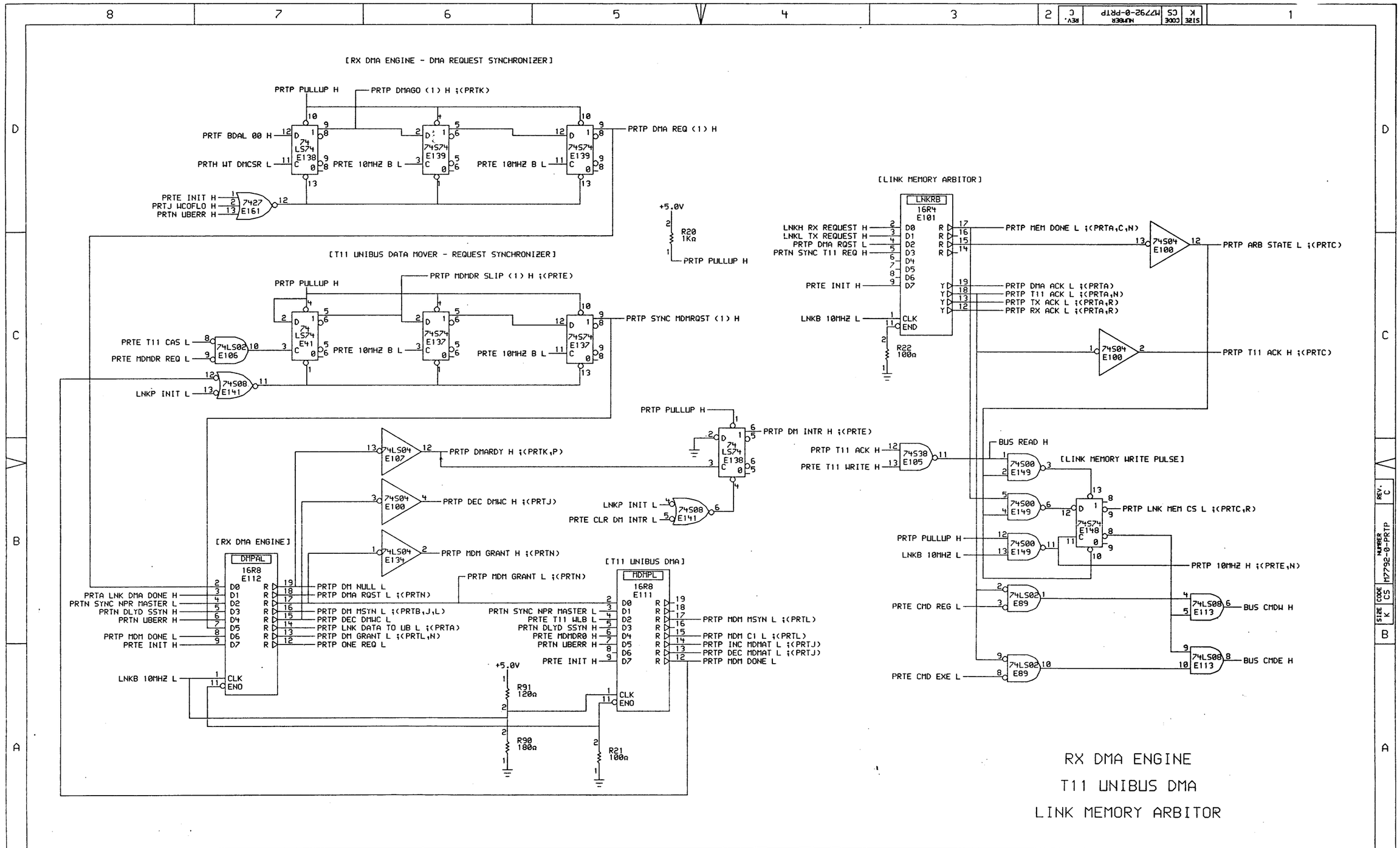

REVISIONS		
CHK	CHANGE NO.	REV

digital

DRN: Ted Sargent — DATE 24-MAY-83
CHK'D: Tom Walsh — DATE 24-MAY-83
ENG: Rick Szmaus — DATE 24-MAY-83
BOARD LOCATION:
SHEET 1 OF 1
DSKE:<SARGENT>PRTPC.DRW 16-MAY-83 07:51
NEXT HIGHER ASSEMBLY: D-UA-M7792-0-0
FIRST USED ON OPTION/MODEL: DELUNA

TITLE: DELUNA PORT MODULE (PRTP)

SIZE	CODE	NUMBER	REV.
K	CS	M7792-0-PRTP	C

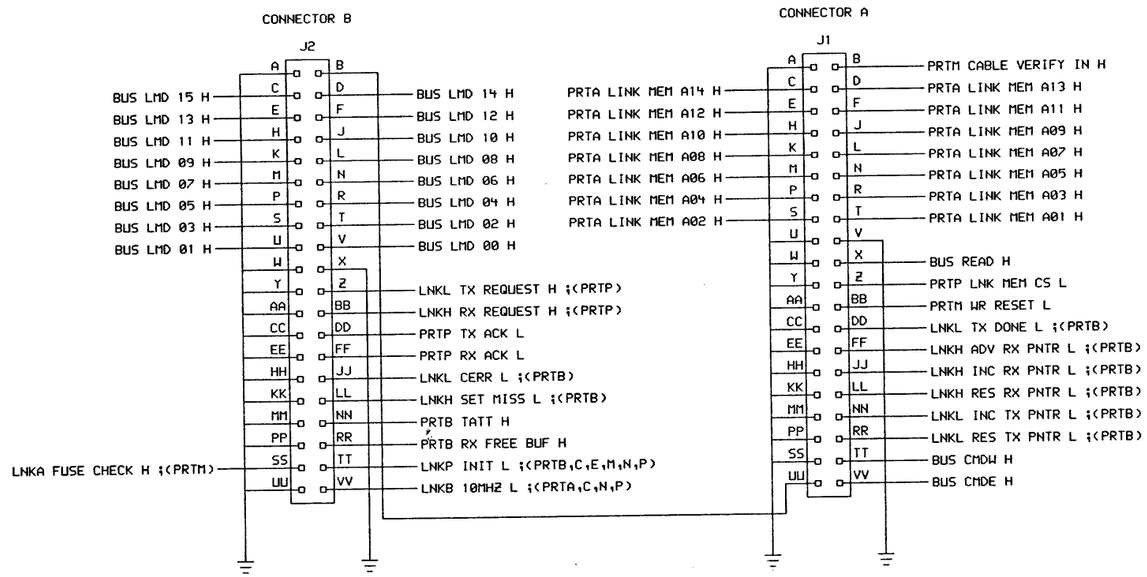

[BUS GRANT CONTINUITY]

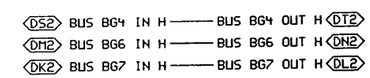

LINK MODULE FORWARD REFERENCE	
PORT OUTPUT	LINK CS
PRTP TX ACK L	LNKN
PRTP RX ACK L	LNKN
PRTB TATT H	LNKH
PRTB RX FREE BUFF H	LNKH
PRTA LINK MEM A<14:01> H	LNKR
BUS READ H	LNKN,R
BUS LMD <15:00> H	LNKE,F,J,N,M,R
PRTP LNK MEM CS L	LNKR
PRTM WR RESET L	LNKP
BUS CMDW H	LNKN
BUS CMDE H	LNKF,N

PORT/LINK INTERCONNECT
CABLE CONNECTORS

REVISIONS		
CHK	CHANGE NO.	REV

digital

DRN: DATE 24-MAY-83 ENG. Rick Szmauz DATE 24-MAY-83
CHK'D. Tom Walsh DATE 24-MAY-83 BOARD LOCATION: SHEET 1 OF 1
DSKE:<SARGENT>PRTRA.DRW 16-MAY-83 07:53 NEXT HIGHER ASSEMBLY: D-UA-M7792-0-0
FIRST USED ON OPTION/MODEL: DELUNA

TITLE: DELUNA PORT MODULE (PRTR)

SIZE	CODE	NUMBER	REV.
K	CS	M7792-0-PRTR	A

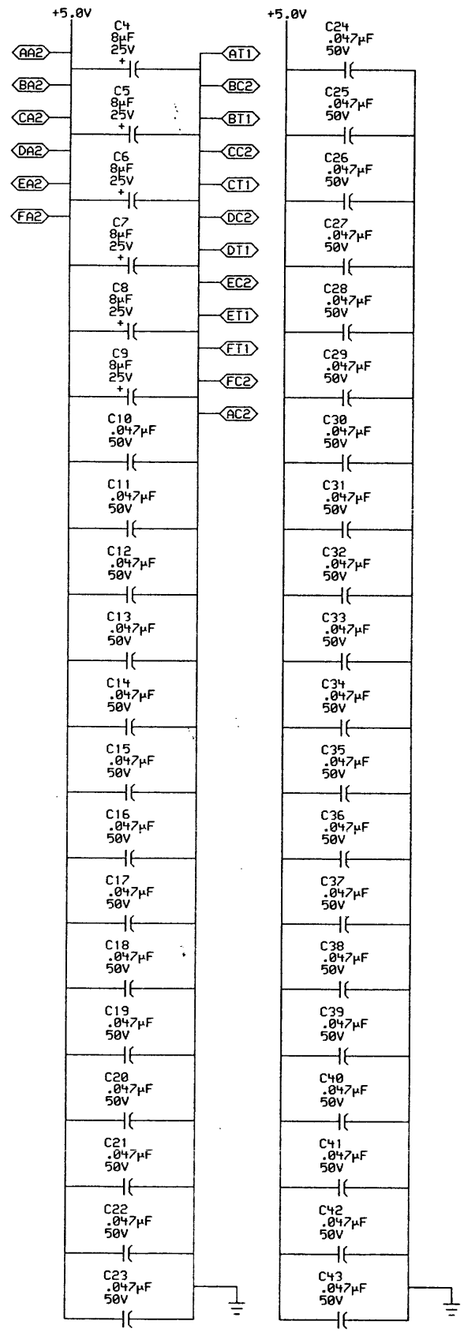

BYPASS CAPACITORS

REVISIONS		
CHK	CHANGE NO.	REV

DRN.	DATE 24-MAY-83	ENG. Rick Szmauz	DATE 24-MAY-83
CHK'D. Tom Walsh	DATE 24-MAY-83	BOARD LOCATION: SHEET 1 OF 1	
DSKE:<SARGENT>PRTSA.DRW 16-MAY-83 07:04		NEXT HIGHER ASSEMBLY: D-UA-M7792-0-0	
FIRST USED ON OPTION/MODEL: DELUNA			

TITLE: DELUNA PORT MODULE (PRTS)

SIZE	CODE	NUMBER	REV.
K	CS	M7792-0-PRTS	A

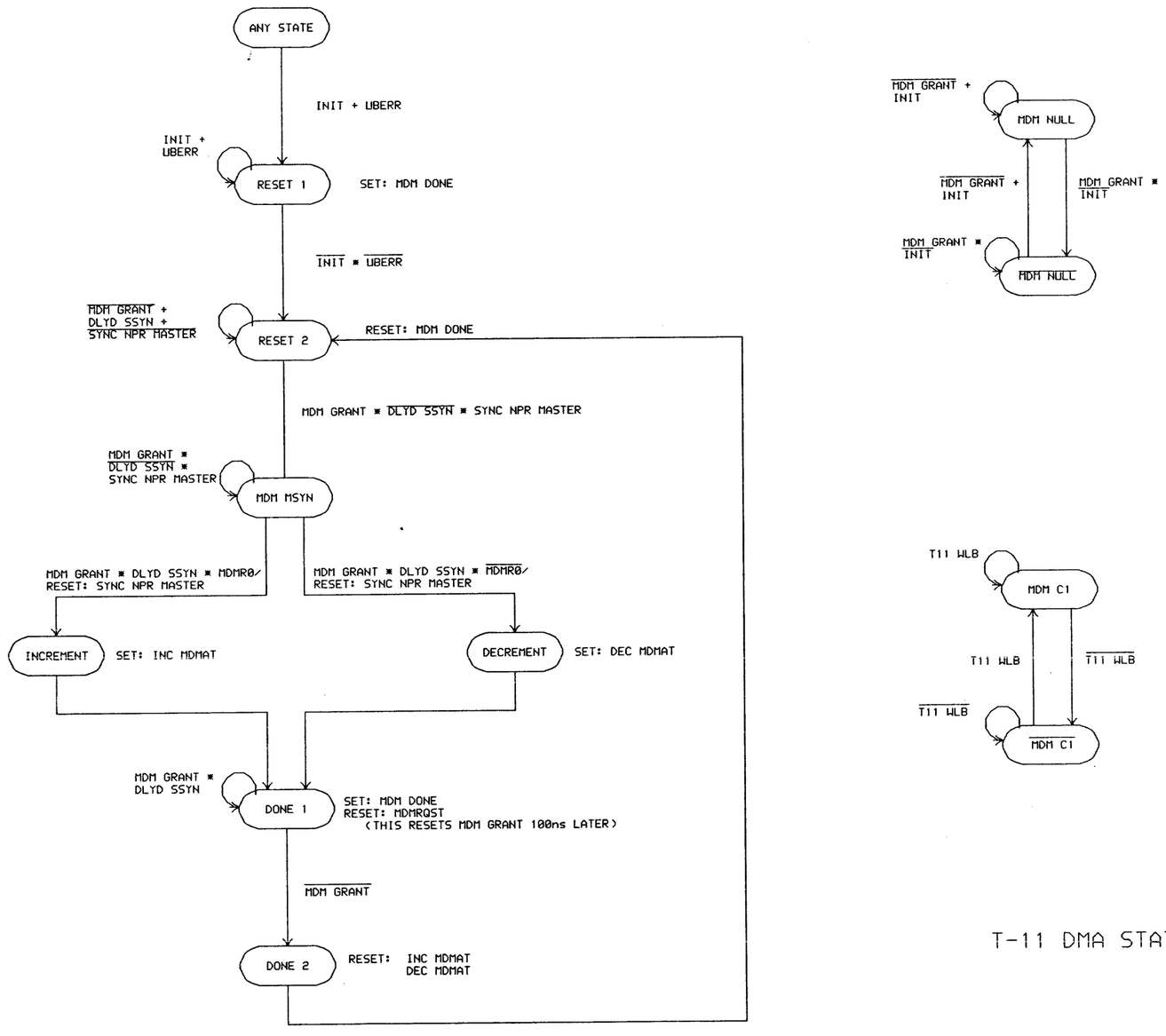

T-11 DMA STATE DIAGRAMS

REVISIONS		
CHK	CHANGE NO.	REV

digital

DRN. P.HEBERT" DATE 06-MAY-83 ENG. Rick Szmauz DATE 06-MAY-83

CHK: D. Sargent DATE 06-MAY-83 BOARD LOCATION: SHEET 1 OF 1

DSKE:<SARGENT>PRTSD1.DRW 13-MAR-83 10:37 NEXT HIGHER ASSEMBLY: D-UA-M7792-0-0

FIRST USED ON OPTION/MODEL: DELUNA

TITLE: DELUNA PORT MODULE (SD1)

SIZE	CODE	NUMBER	REV.
K	CS	M7792-0-SD1	A

SARGENT, DSKE:<SARGENT>PRTSD1.DPL.1, SCALE 2, "D" RELEASE BOX, SIGNED OFF

LINK-PORT BUS OPERATION STATE DIAGRAM

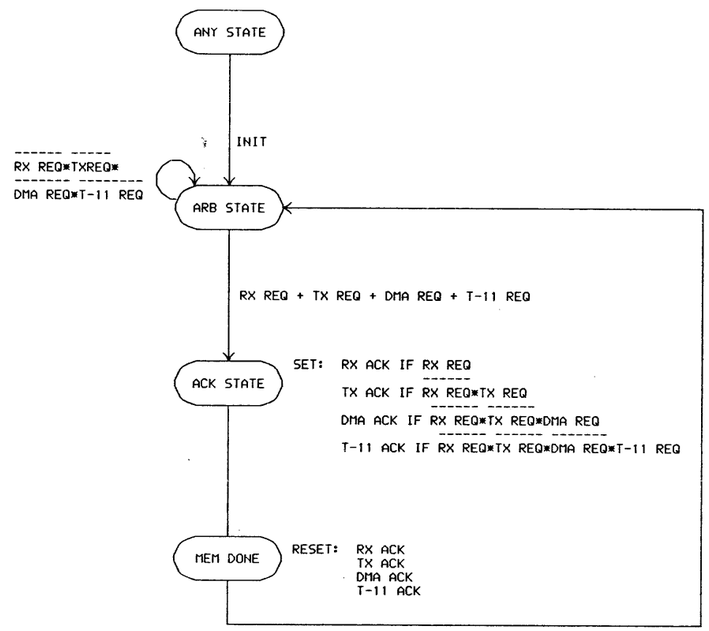

LINK-PORT BUS OPERATION STATE DIAGRAM

REVISIONS		
CHK	CHANGE NO.	REV

digital	DRN. PAUL HEBERT"	DATE 06-MAY-83	ENG. Rick Szmauz	DATE 06-MAY-83
	CHKD.	DATE 06-MAY-83	BOARD LOCATION: SHEET 1 OF 1	
DSKE:<SARGENT>PRTSD2.DRW	06-MAY-83 08:24		NEXT HIGHER ASSEMBLY:	
FIRST USED ON OPTION>MODEL:	DELUNA		D-UA-M7792-0-0	

TITLE: DELUNA PORT MODULE (SD2)

SIZE	CODE	NUMBER	REV.
K	CS	M7792-0-SD2	A

RECEIVE DMA ENGINE STATE DIAGRAMS

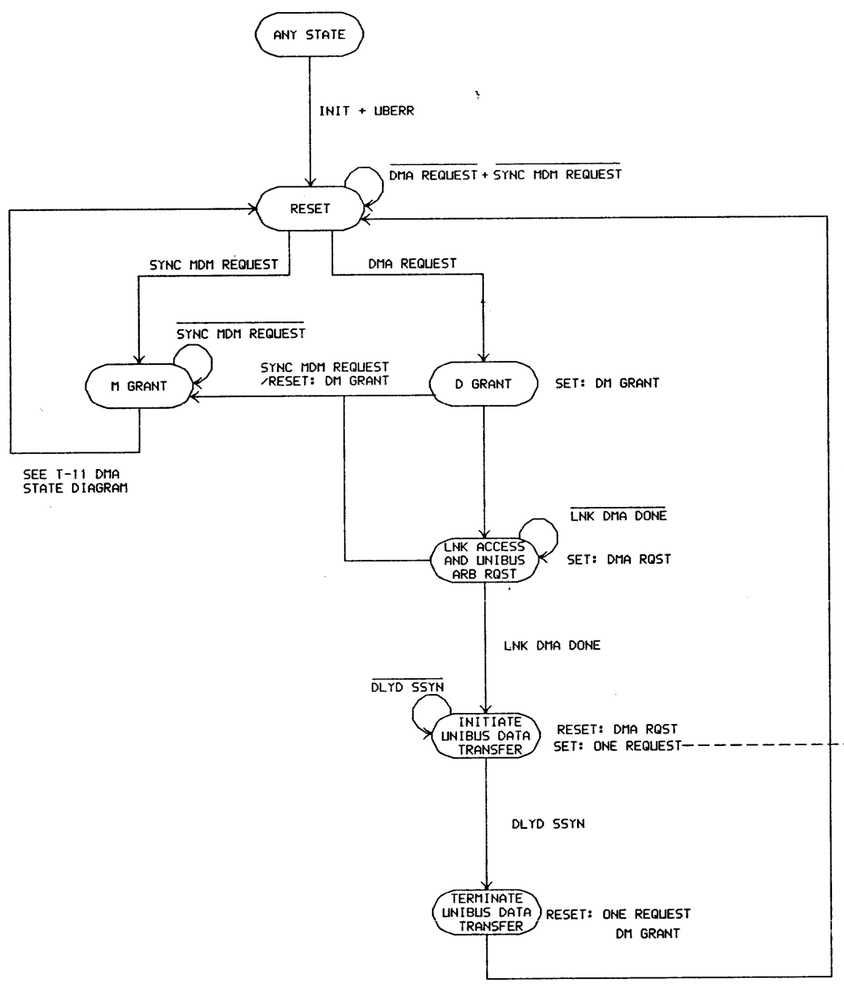

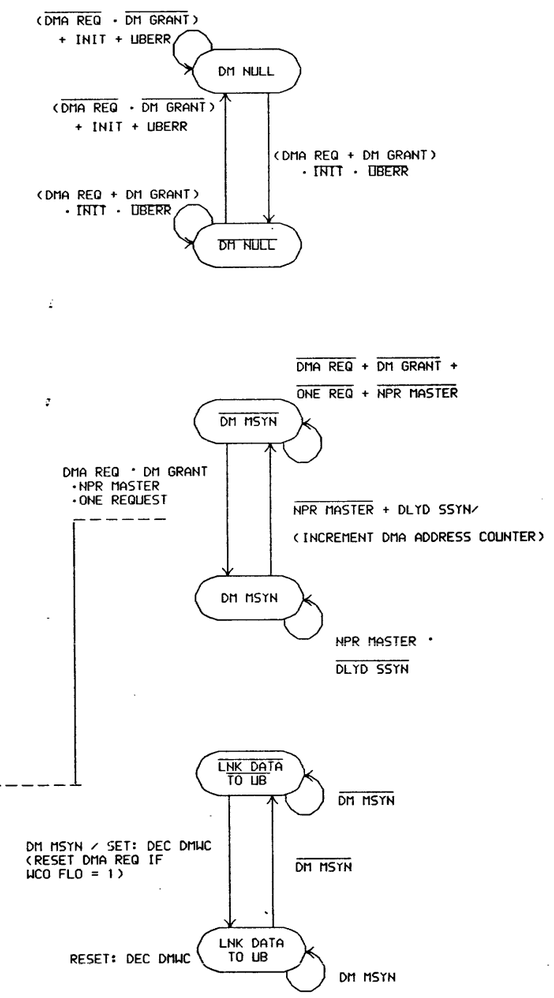

RX DMA ENGINE STATE DIAGRAMS

REVISIONS		
CHK	CHANGE NO.	REV

DRN. PAUL HEBERT"	DATE 20-MAY-83	ENG. Rick Szmauz	DATE 20-MAY-83	TITLE: DELUNA PORT MODULE (SD3)
CHKD.	DATE 20-MAY-83	BOARD LOCATION: SHEET 1 OF 1		
DSKE:<SARGENT>PRTSD3.DRW|20-MAY-83 08:07		NEXT HIGHER ASSEMBLY: D-UA-M7792-0-0		SIZE K / CODE CS / NUMBER M7792-0-SD3 / REV. A
FIRST USED ON OPTION/MODEL: DELUNA				

SARGENT, DSKE:<SARGENT>PRTSD3.DPL.1, SCALE 2, "D" RELEASE BOX, SIGNED OFF

T-11 INTERRUPT REQUEST/ACKNOWLEDGE (ASPI/IACK) TRANSACTIONS

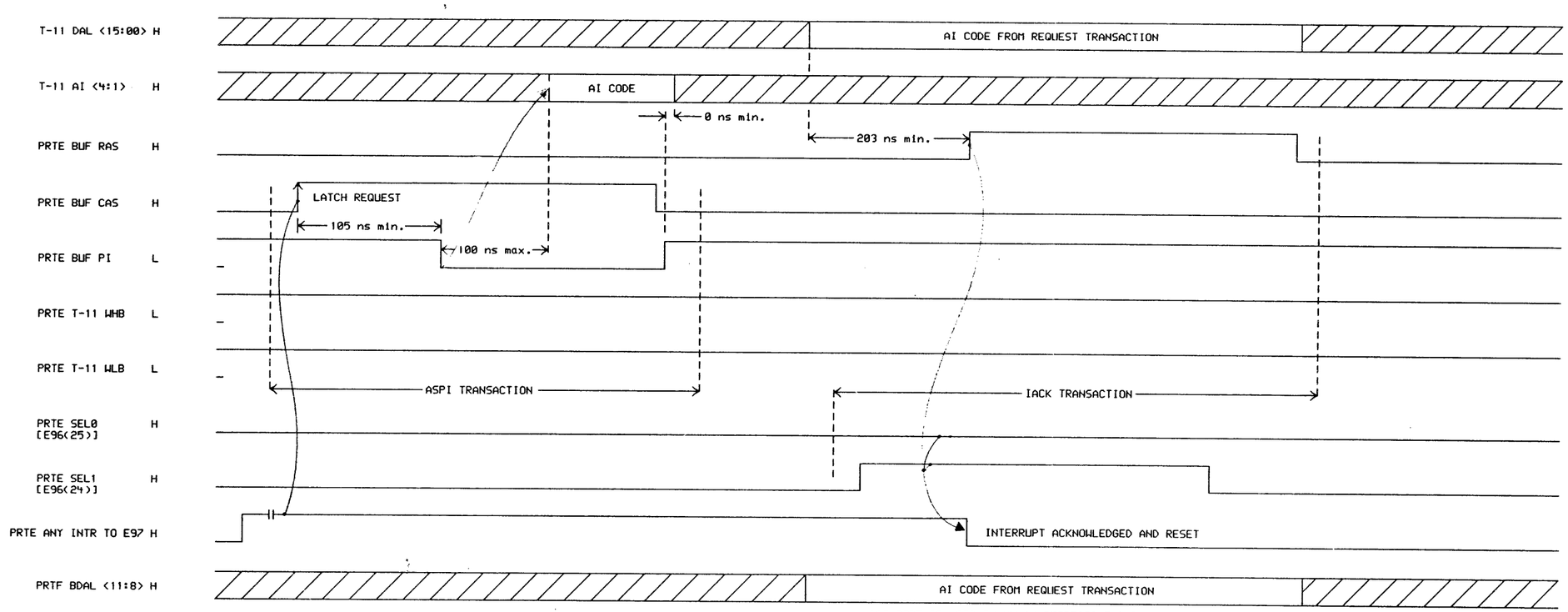

(AI CODE IS USED TO CLEAR RESPECTIVE INTR (SEE NOTE))

INTERRUPT	E97(PIN)	AI CODE DURING ASPI TRANSACTION AI(1)	AI(2)	AI(3)	AI(4)	T-11 INTERNAL VECTOR	PRIORITY	DURING IACK TRANSACTION BDAL(8)	BDAL(9)	BDAL(10)
LINK MEMORY PARITY	4	L	L	L	L	140	7	L	L	L
UNIBUS ERROR	8	L	L	H	L	150	7	L	L	H
MISSED PACKET	3	L	H	L	L	100	6	L	H	L
DMA ENGINE DONE	18	L	H	H	H	114	6	L	H	H
PACKET RECEIVED	17	H	L	L	L	120	5	H	L	L
TIMER	14	H	L	H	H	134	5	H	L	H
PCSR0 ACCESSED	7	H	H	L	H	064	4	H	H	L
TRANSMIT DONE	13	H	H	H	L	070	4	H	H	H

SYMBOL KEY

IGNORED OR INVALID

VALID

NOTE: THE PACKET RECEIVED INTR (E97(17)) IS NOT RESET BY IACK.
THE SERVICE ROUTINE READS THE FIFO ON PRTB (RD LRAC H).
THIS ACTION RESETS THE INTR IF NO OTHER PACKETS ARE PENDING,
IF OTHERS ARE WAITING THEN THE PACKET RECEIVED INTR
AUTOMATICALLY SETS AGAIN.

REVISIONS		
CHK	CHANGE NO.	REV

digital

DRN. K. Foorby DATE 06-MAY-83 ENG. Rick Szmauz DATE 06-MAY-83
CHK. R. Langevin DATE 06-MAY-83 BOARD LOCATION: SHEET 1 OF 1
DSKE:<SARGENT>PRTTD1.DRW;06-MAY-83 08:31 NEXT HIGHER ASSEMBLY: D-UA-M7792-0-0
FIRST USED ON OPTION/MODEL: DEUNA

TITLE: DEUNA PORT MODULE (TD1)

SIZE	CODE	NUMBER	REV.
K	CS	M7792-0-TD1	A

TW

T-11 BUS DATA TRANSFER

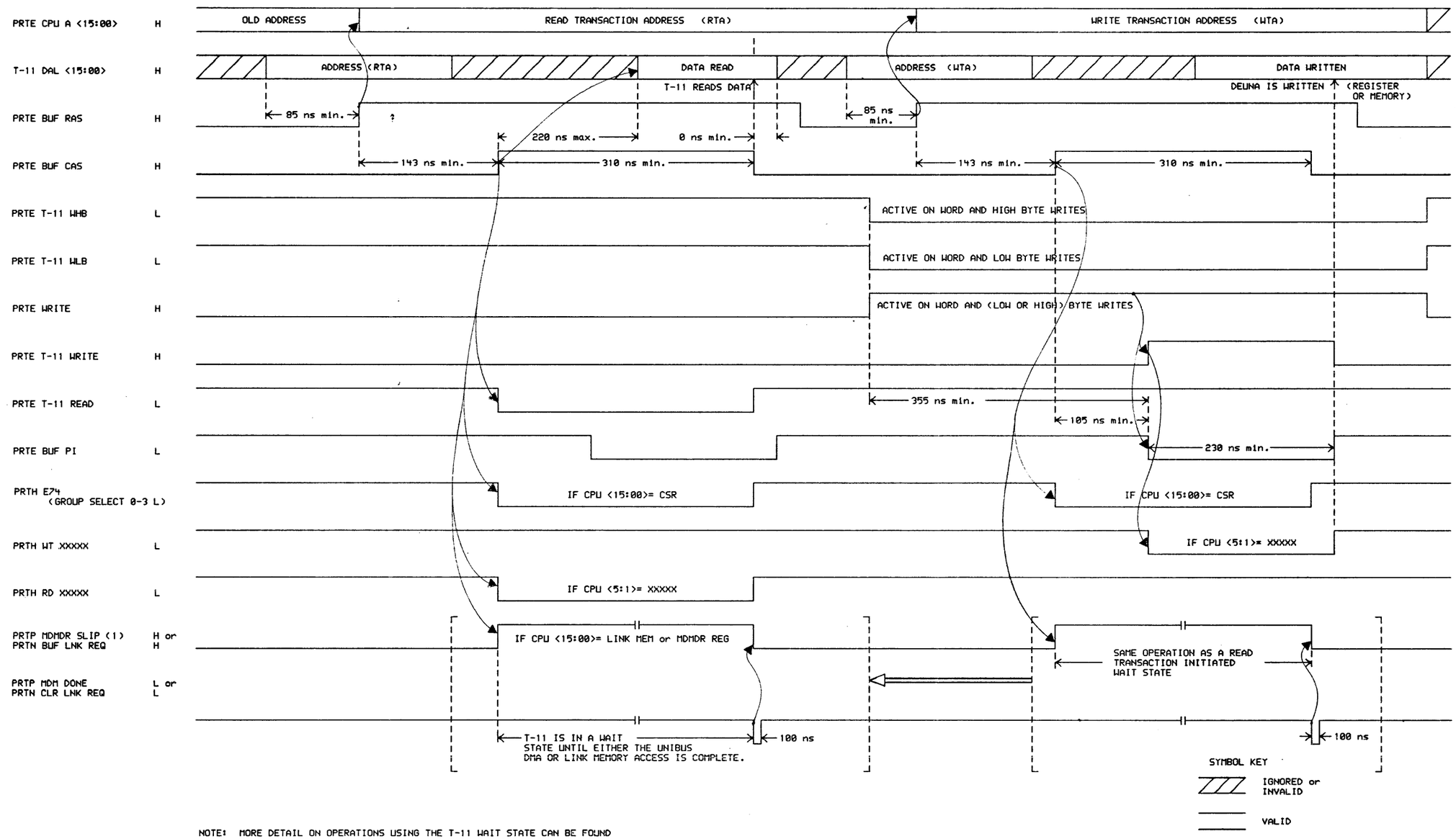

NOTE: MORE DETAIL ON OPERATIONS USING THE T-11 WAIT STATE CAN BE FOUND ON THE FOLLOWING DIAGRAMS:
1. LINK PORT BUS OPERATION
2. T-11 DMA OPERATION

REVISIONS		
CHK	CHANGE NO.	REV

DRN. PAUL HEBERT" DATE 16-MAY-83 ENG. Rick Szmauz DATE 16-MAY-83
CHK'D. DATE 16-MAY-83 BOARD LOCATION: SHEET 1 OF 1
DSKE:<SARGENT>PRTTD2.DRW;16-MAY-83 07:08 NEXT HIGHER ASSEMBLY:
FIRST USED ON OPTION/MODEL: DEUNA D-UA-M7792-0-0

TITLE: DEUNA PORT MODULE (TD2)

SIZE	CODE	NUMBER	REV.
K	CS	M7792-0-TD2	A

UNIBUS INTERRUPT ARBITRATION AND VECTOR TRANSFER

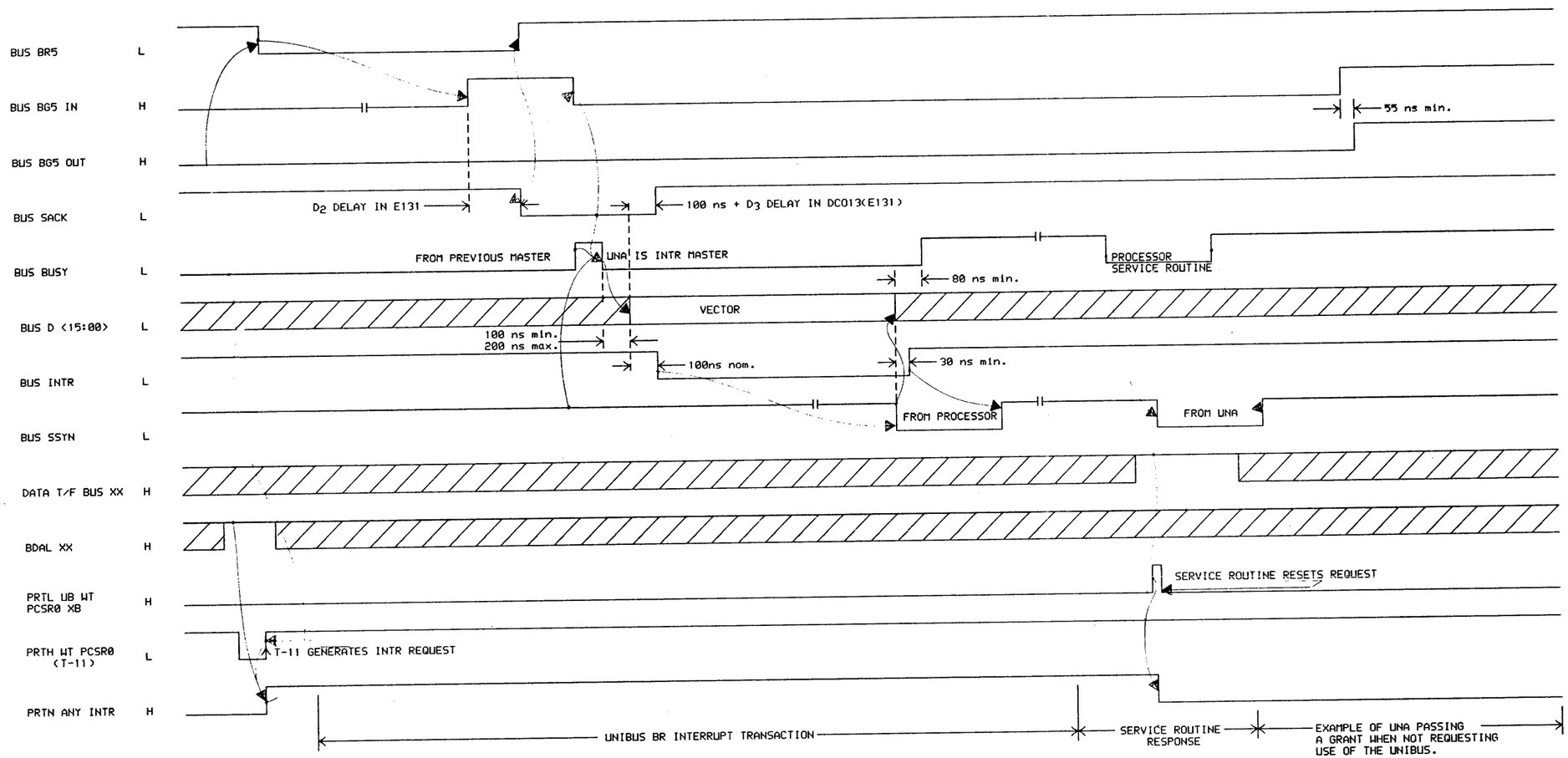

NOTE: THE T-11 INITIATES UNIBUS INTERRUPTS BY SETTING APPROPRIATE BIT(S) IN PCSR0 (PRTH). THE SERVICE ROUTINE THEN CLEARS THE REQUESTING BIT(S) BY WRITING A ONE (1) INTO THE BIT POSITION OF THE REQUEST. E2, E39 AND E50 PROVIDE THE "T-11 WRITE ONE TO SET, UNIBUS WRITE ONE TO RESET" FUNCTION. SEE PAL EQUATIONS FOR MORE DETAIL.

SYMBOL KEY

IGNORED or NOT VALID

VALID

REVISIONS		
CHK	CHANGE NO.	REV

DRN. PAUL HEBERT" DATE 06-MAY-83 ENG. Rick Szmauz DATE 06-MAY-83
CHK'D. DATE 06-MAY-83 BOARD LOCATION: SHEET 1 OF 1
DSKE:<SARGENT>PRTTD3.DRW 06-MAY-83 08:32 NEXT HIGHER ASSEMBLY: D-UA-M7792-0-0
FIRST USED ON OPTION/MODEL: DEUNA

TITLE: DEUNA PORT MODULE (TD3)

SIZE	CODE	NUMBER	REV.
K	CS	M7792-0-TD3	A

Tw 1

UNIBUS SLAVE DATA TRANSFER

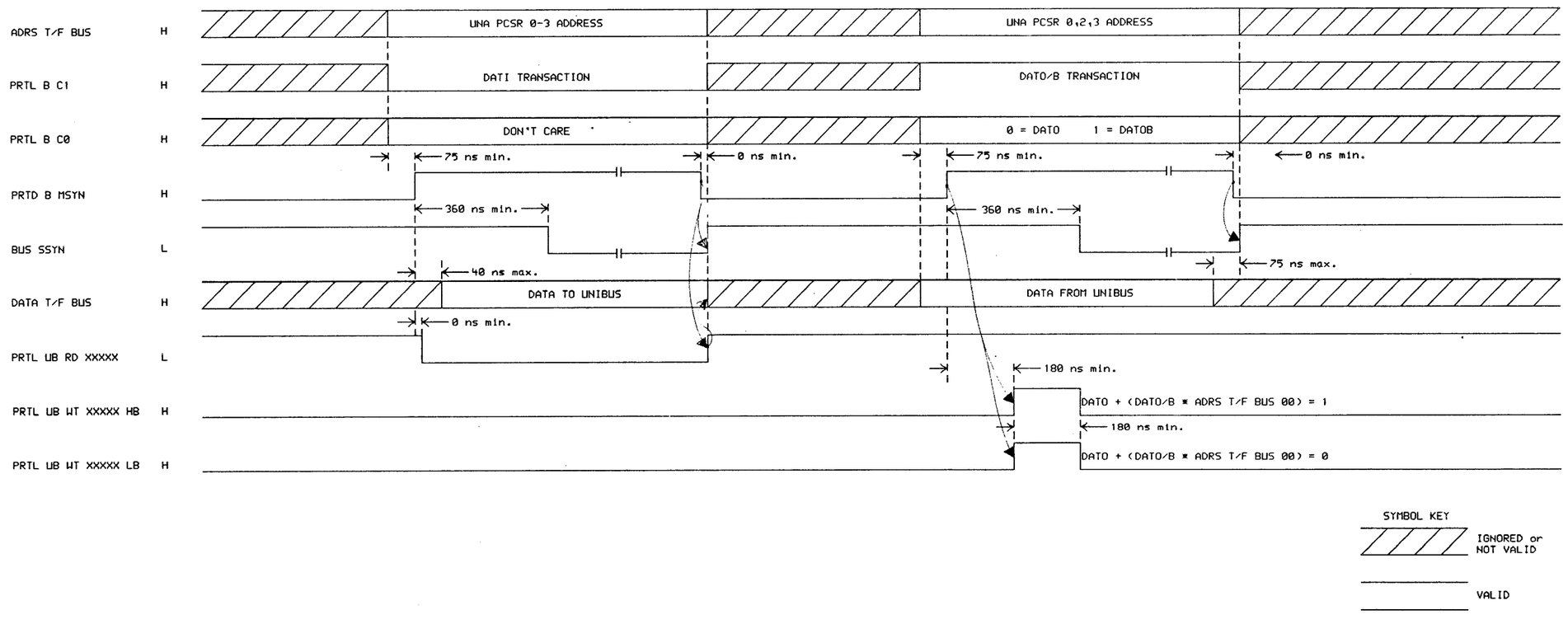

REVISIONS		
CHK	CHANGE NO.	REV

DRN. PAUL HEBERT"	DATE 06-MAY-83	ENG. Rick Szmaux	DATE 06-MAY-83
CHKD.	DATE 06-MAY-83	BOARD LOCATION: SHEET 1 OF 1	
DSKE:<SARGENT>PRTTD4.DRW	06-MAY-83 08:33	NEXT HIGHER ASSEMBLY:	
FIRST USED ON OPTION/MODEL: DELNA		D-UA-M7792-0-0	

TITLE: DELNA PORT MODULE (TD4)

SIZE	CODE	NUMBER	REV.
K	CS	M7792-0-TD4	A

SIZE K CODE CS NUMBER M7792-0-TD4 REV. A

UNIBUS MASTER ARBITRATION AND DATA TRANSFER

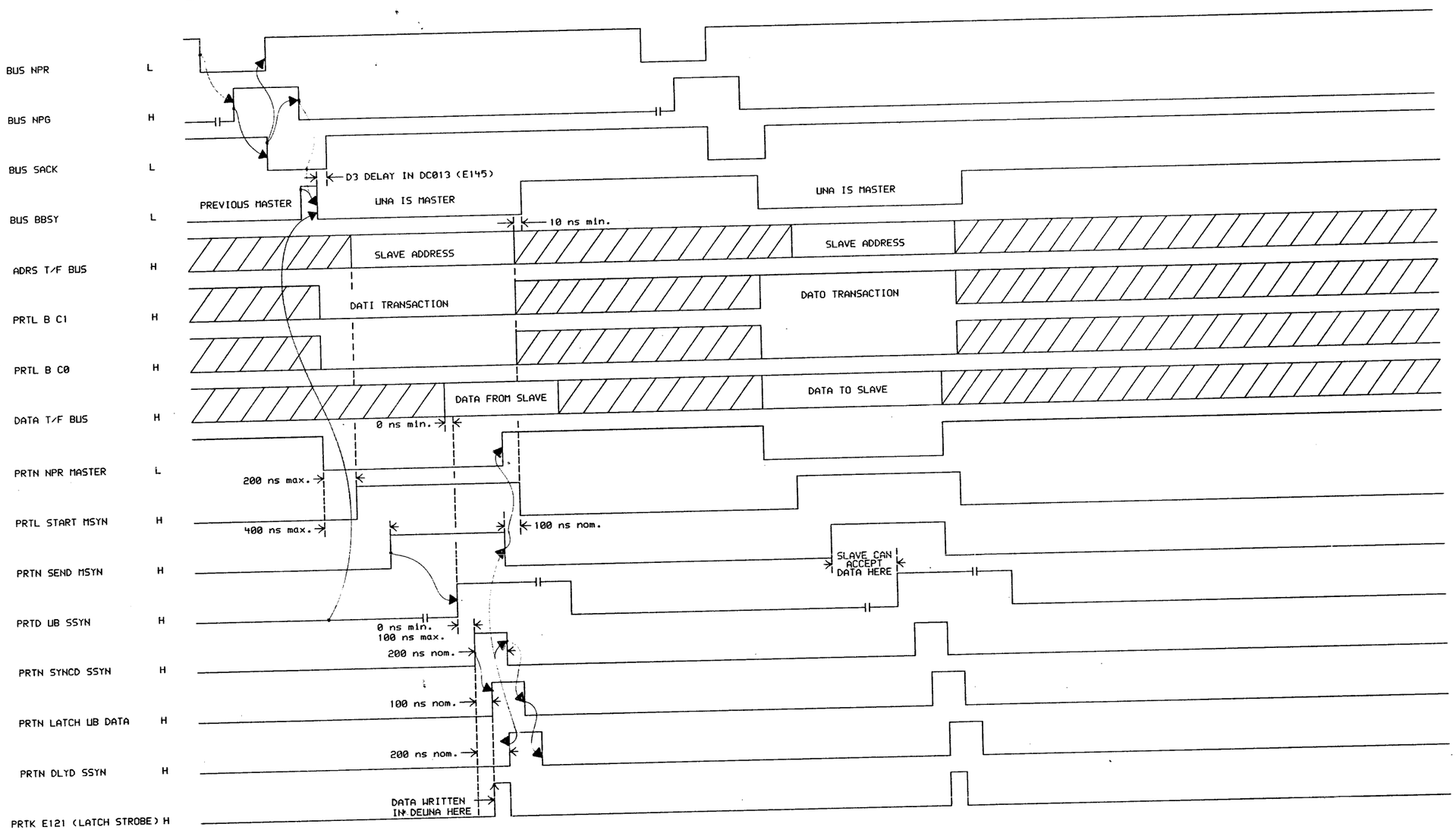

NOTE 1:
THIS DIAGRAM ILLUSTRATES GENERIC UNIBUS TRANSACTIONS BY EITHER THE RECEIVE DMA ENGINE OR T-11 DMA. SEE THE T-11 DMA OPERATION OR RECEIVE DMA ENGINE OPERATION DIAGRAMS FOR SPECIFICS ON THE UNIQUE ASPECTS OF THE TWO TYPES OF DMA. (THE RECEIVE DMA ENGINE ONLY PERFORMS DATO TRANSACTIONS)

NOTE 2:
DATO TIMING RELATIONS ARE IDENTICAL TO DATI EXCEPT, PRTL B C1 H = 1 AND DATA IS WRITTEN TO THE SLAVE.

SYMBOL KEY

IGNORED OR INVALID

VALID

REVISIONS		
CHK	CHANGE NO.	REV

digital

DRN. K.L. Sargent DATE 06-MAY-83 ENG. Rick Szmauz DATE 06-MAY-83

CHK. K.L. Sargent DATE 06-MAY-83 BOARD LOCATION: SHEET 1 OF 1

DSKE:<SARGENT>PRTTD5.DRW 06-MAY-83 08:34 NEXT HIGHER ASSEMBLY: D-UA-M7792-0-0

FIRST USED ON OPTION/MODEL: DEUNA

TITLE: DEUNA PORT MODULE (TD5)

SIZE	CODE	NUMBER	REV.
K	CS	M7792-0-TD5	A

T-11 DMA OPERATION

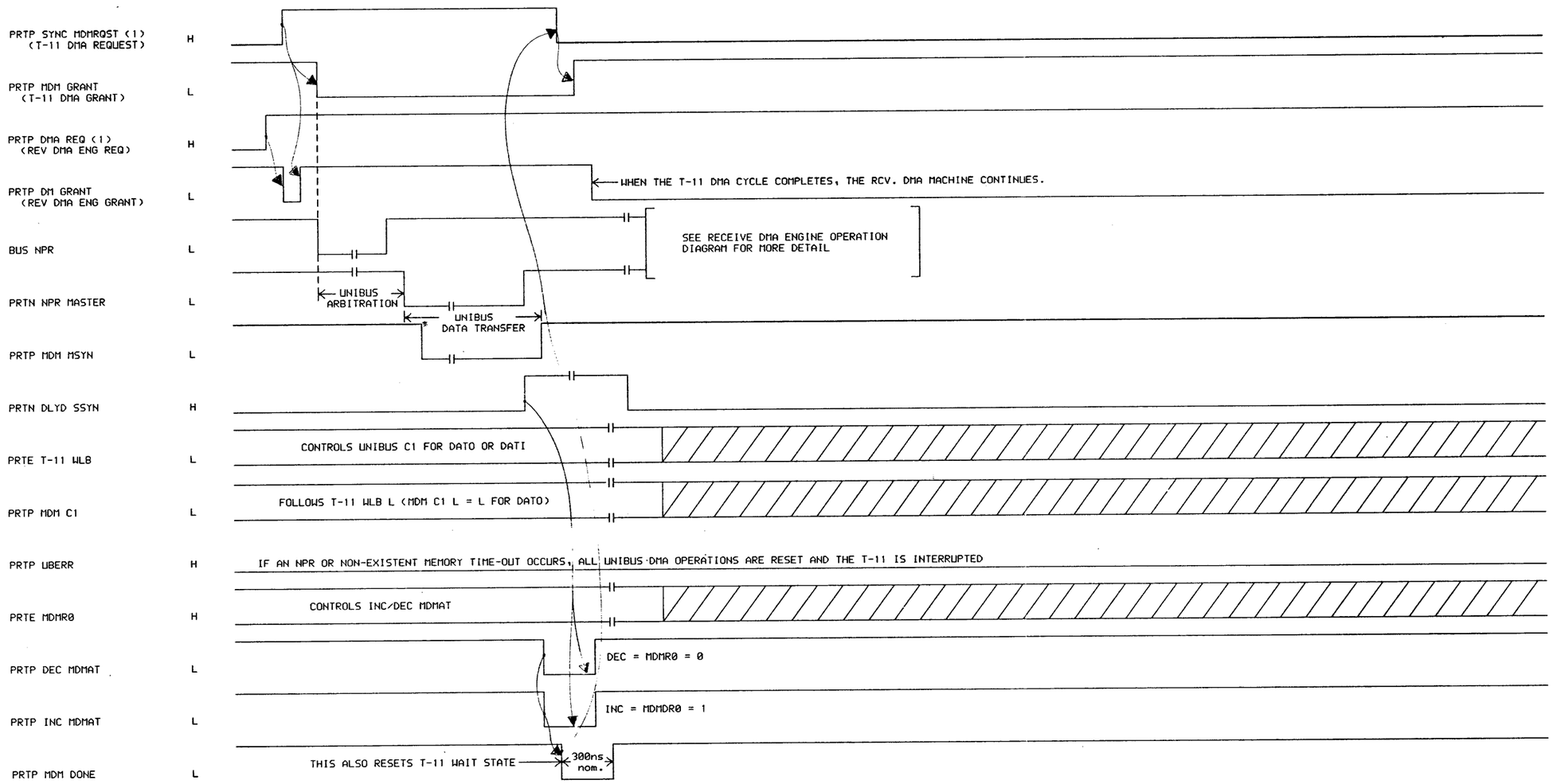

NOTE 1: FOR MORE DETAIL ON UNIBUS NPR OPERATION, SEE UNIBUS ARBITRATION AND DATA TRANSFER DIAGRAM.

NOTE 2: THE RECEIVE DMA ENGINE REQUEST AND GRANTS ARE SHOWN TO ILLUSTRATE THAT THE T-11 DMA REQUEST HAS A HIGHER PRIORITY.

NOTE 3: WHEN THE T-11 DMA OPERATION BEGINS (SYNC MDMRQST(1) = 1) THE T-11 IS ALREADY IN THE WAIT STATE. SEE THE T-11 BUS DATA TRANSFER DIAGRAM.

SYMBOL KEY

IGNORED OR INVALID

VALID

REVISIONS		
CHK	CHANGE NO.	REV

digital

DRN: K. Sargent DATE 16-MAY-83 ENG. Rick Szmauz DATE 16-MAY-83

CHK: D. K. Sargent DATE 16-MAY-83 BOARD LOCATION: SHEET 1 OF 1

DSKE:<SARGENT>PRTTD6.DRW 16-MAY-83 07:09 NEXT HIGHER ASSEMBLY: D-UA-M7792-0-0

FIRST USED ON OPTION/MODEL: DELUNA

TITLE: DELUNA PORT MODULE (TD6)

SIZE	CODE	NUMBER	REV.
K	CS	M7792-0-TD6	A

RECEIVE DMA ENGINE OPERATION

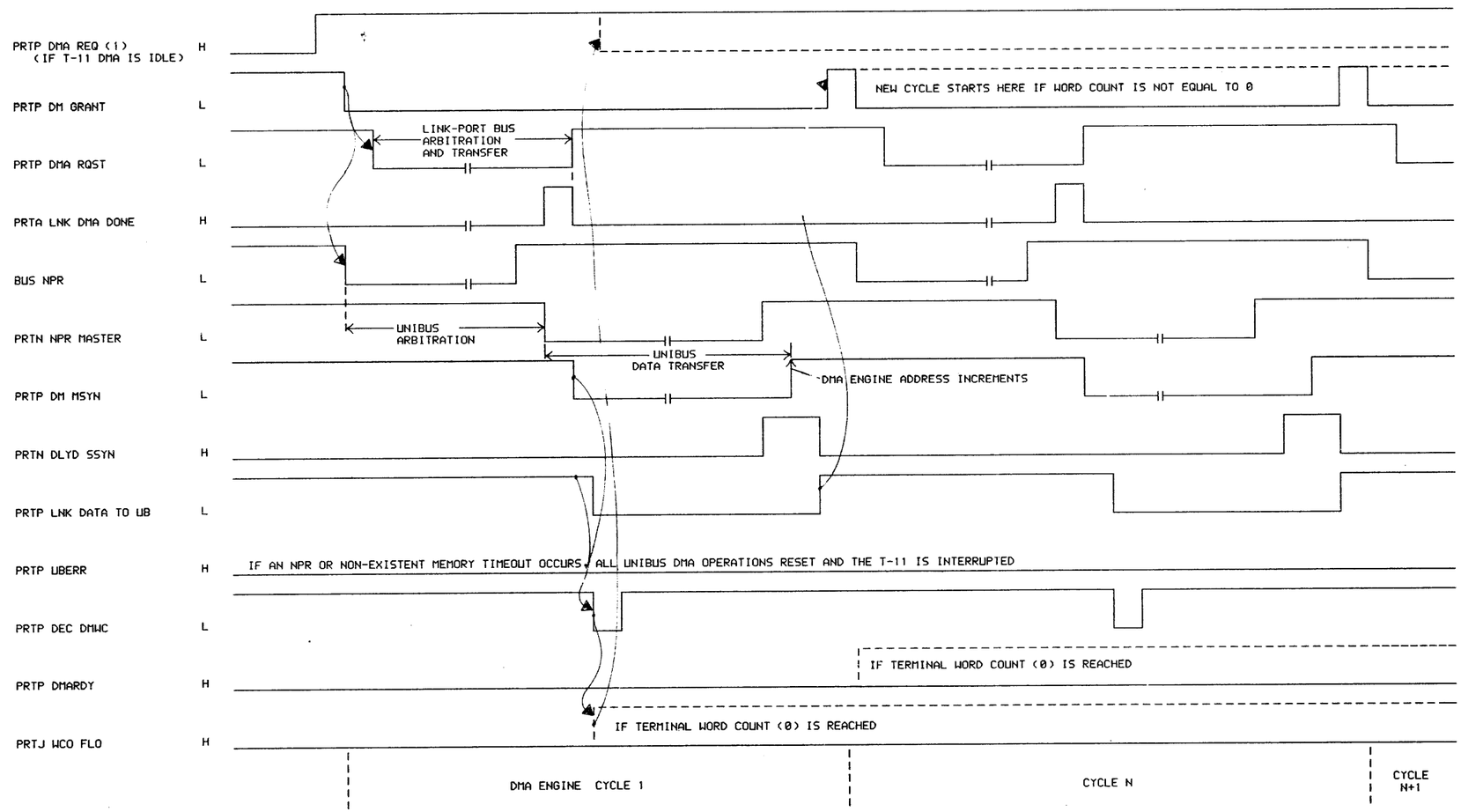

NOTE 1: FOR MORE DETAIL ON UNIBUS ARBITRATION, DATA TRANSFER AND LINK-PORT BUS OPERATION SEE THE APPROPRIATE TIMING DIAGRAM.

NOTE 2: SINCE THE DMA ENGINE HAS LOWER PRIORITY THAN T-11 DMA, THE T-11 DMA REQUEST (PRTP SYNC MDMRQST(1) H) WILL TAKE PRECEDENCE OVER AN ENGINE DMA REQUEST (DMA REQ (1) H) FOR THE DURATION OF THE T-11 DMA OPERATION.

REVISIONS		
CHK	CHANGE NO.	REV

DRN. PAUL HEBERT"	DATE 06-MAY-83	ENG. Rick Szmauz	DATE 06-MAY-83	TITLE: DEUNA PORT MODULE (TD7)
CHK: D. Lagarat	DATE 06-MAY-83	BOARD LOCATION: SHEET 1 OF 1		
DSKE:<SARGENT>PRTTD7.DRW 06-MAY-83 08:36		NEXT HIGHER ASSEMBLY: D-UA-M7792-0-0		
FIRST USED ON OPTION/MODEL: DEUNA				SIZE K / CODE CS / NUMBER M7792-0-TD7 / REV. A

SIZE K CODE CS NUMBER M7792-0-TD7 REV. A

LINK-PORT BUS OPERATION

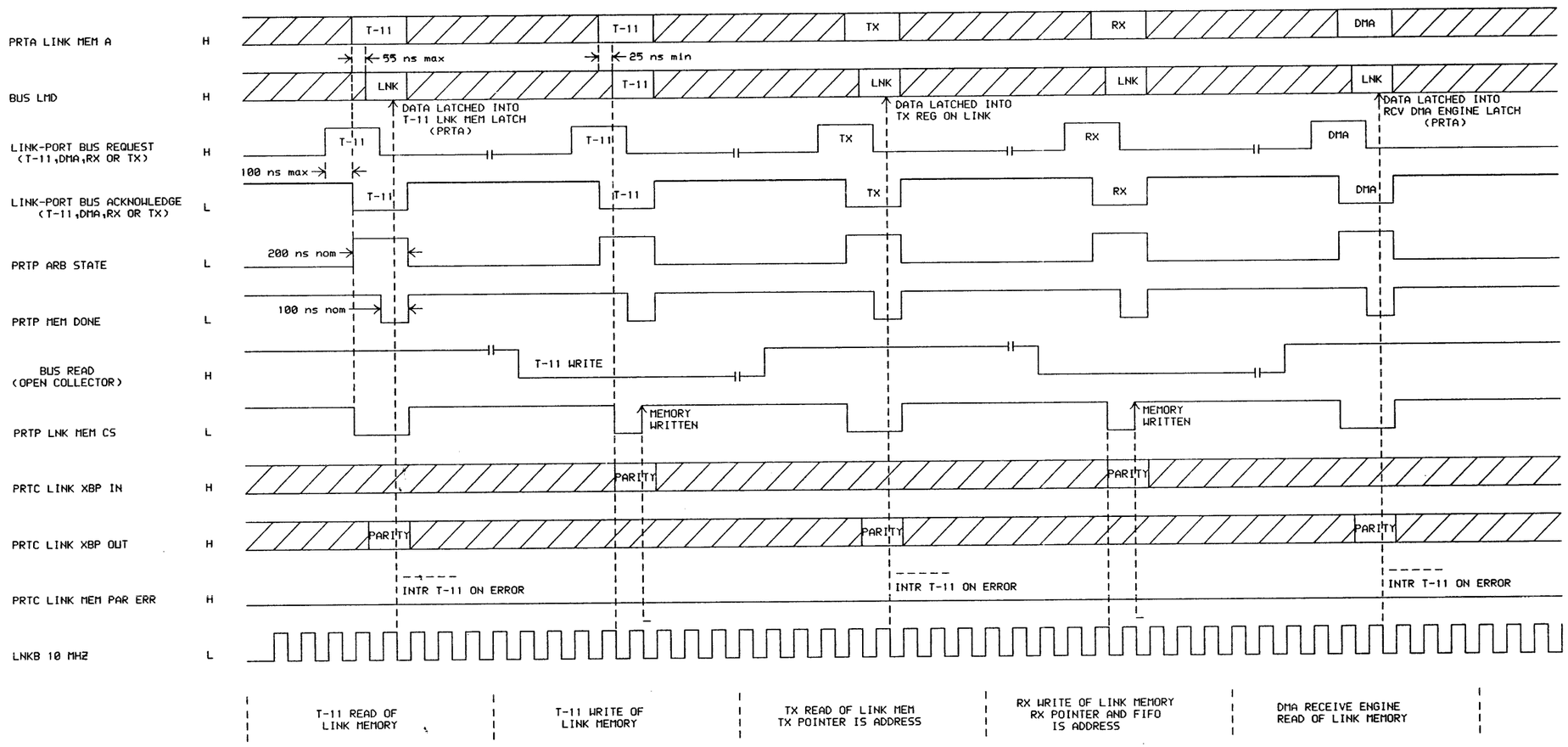

NOTE 1: REQUESTS CAN ARRIVE IN ANY ORDER AT THE LINK ARBITER (E101). THE ACKNOWLEDGE PRIORITIES ARE AS FOLLOWS:

PRIORITY	REQUEST
1	RX
2	TX
3	DMA
4	T-11

NOTE 2: RX AND TX TRANSFERS ARE REQUESTED BY THE LINK MODULE. THE LINK MODULE CONTROLS INCREMENTING OF THE RX AND TX POINTERS. RX AND TX TRANSFERS CAN BE READ OR WRITE.

NOTE 3: THE T-11 IS IN THE WAIT STATE DURING LINK-PORT BUS TRANSFERS. SEE T-11 BUS DATA TRANSFER DIAGRAM.

NOTE 4: THE RECEIVE DMA ENGINE PERFORMS ONLY READ TRANSFERS.

REVISIONS		
CHK	CHANGE NO.	REV

DRN. PAUL HEBERT" DATE 06-MAY-83 ENG. Rick Szmauz DATE 06-MAY-83
CHK'D. DATE 06-MAY-83 BOARD LOCATION: SHEET 1 OF 1
DSKE:<SARGENT>PRTTD8.DRW 06-MAY-83 08:37 NEXT HIGHER ASSEMBLY: D-UA-M7792-0-0
FIRST USED ON OPTION/MODEL: DEUNA

TITLE: DEUNA PORT MODULE (TD8)

SIZE	CODE	NUMBER	REV.
K	CS	M7792-0-TD8	A

PART NUMBER: 23-037K5-00

LOCATION: E112

DEVICE TYPE: PAL16R8
PIN NUMBER = SYMBOL TABLE:

1= 10MHZ	8= MDM DONE L	15= DEC DMWC L
2= DM REQ H	9= INIT H	16= DM MSYN L
3= DMA DONE H	10= GND	17= MDM GRANT L
4= NPR MASTER L	11= GND	18= DMA REQ L
5= SSYN H	12= ONE REQ L	19= DM NULL L
6= UBERR H	13= DM GRANT L	20= VCC
7= MDM REQ H	14= DATA TO UB L	

NOTES: DMPAL - (PRTP)
FOR DMPAL-A (BLOCK MOVER PAL - REV A)

```
          |0|0|0|0|0|0|0|0|1|1|1|1|1|1|1|1|1|1|
PAL PINS: |2|3|4|5|6|7|8|9|2|3|4|5|6|7|8|9|

OUTPIN 19  L X X X L X X L X H X X X X X X /DM GRANT L * /DM REQ H * /INIT H * /UBERR H
           X X X X X X X H X X X X X X X X INIT H
           X X X X H X X L X X X X X X X X UBERR H * /INIT H

OUTPIN 18  H L X X L X X L H L X X X X X X DM REQ H * DM GRANT L * /DMA DONE H * /UBERR H * /ONE REQ L * /INIT H

OUTPIN 17  X X X X L H H L X H X X X X X X MDM REQ H * /DM GRANT L * /MDM DONE L * /UBERR H * /INIT H

OUTPIN 16  H X L L L X X L L L X X X X X X DM REQ H * DM GRANT L * ONE REQ L * NPR MASTER L * /UBERR H * /SSYN H * /INIT H
           X X L L L X X L X X X X L X X X DM MSYN L * NPR MASTER L * /SSYN H * /UBERR H * /INIT H

OUTPIN 15  X X X X L X X L X X H X L X X X DM MSYN L * /DATA TO UB L * /UBERR H * /INIT H

OUTPIN 14  X X X X L X X L X X X X L X X X DM MSYN L * /UBERR H * /INIT H

OUTPIN 13  H X X X L L X L X X X X X H X X DM REQ H * /MDM REQ H * /MDM GRANT L * /UBERR H * /INIT H
           X X X X L X X L L L X X X X X X DM GRANT L * ONE REQ L * /UBERR H * /INIT H
           X X X X L X X L X L X X L X X X DM GRANT L * DM MSYN L * /UBERR H * /INIT H

OUTPIN 12  H H X X L X X L X L X X X X X X DM GRANT L * DM REQ H * DMA DONE H * /UBERR H * /INIT H
           X X X L L X X L L L X X X X X X ONE REQ L * /SSYN H * /UBERR H * /INIT H
```


REVISIONS		
CHK	CHANGE NO.	REV

DRN: Ken Sargent	DATE 23-MAY-83	ENG. Rick Szmauz	DATE 23-MAY-83
CHK'D. Ken Sargent	DATE 23-MAY-83	BOARD LOCATION: SHEET 1 OF 1	
DSK:PRTTT1.T2P[4,112] 23-MAY-83 15:33		NEXT HIGHER ASSEMBLY: D-UA-M7792-0-0	
FIRST USED ON OPTION/MODEL: DELUNA			

TITLE: DELUNA PORT MODULE PAL LISTINGS

SIZE	CODE	NUMBER	REV.
K	CS	M7792-0-TT1	A

SARGENT, DSKE:<SARGENT>PRTTT1.DPL.1, SCALE 2, "D" RELEASE BOX, SIGNED OFF

PART NUMBER: 23-038K5-00

LOCATION: E111

DEVICE TYPE: PAL16R8
PIN NUMBER = SYMBOL TABLE:

1= 10MHZ	8= NC2 H	15= MDM C1 L
2= MDM GRANT L	9= INIT H	16= MDM C0 L
3= SYNC NPR MASTER L	10= GND	17= MDM MSYN L
4= T11 WRITE L	11= GND	18= NC4 L
5= DLYD SSYN H	12= MDM DONE L	19= MDM NULL L
6= MDMDR0 H	13= DEC MDMAT L	20= VCC
7= UBERR H	14= INC MDMAT L	

NOTES: MDMPL - (PRTP)
FOR PAL MDMPL-A (MICRO DMA PAL - REV A)

```
PAL PINS:  |0|0|0|0|0|0|0|0|1|1|1|1|1|1|1|1|1|1|
           |2|3|4|5|6|7|8|9|2|3|4|5|6|7|8|9|

OUTPIN 19  H X X X X X X X X X X X X X X X X /MDM GRANT L
           X X X X X X X H X X X X X X X X INIT H

OUTPIN 18

OUTPIN 17  L L X L X L X L X X X X X X X MDM GRANT L * SYNC NPR MASTER L * /INIT H * /UBERR H * /DLYD SSYN H

OUTPIN 16

OUTPIN 15  X X L X X X X X X X X X X X X T11 WRITE L

OUTPIN 14  L X X H H L X L X X X X X X X MDM GRANT L * /UBERR H * DLYD SSYN H * /INIT H * MDMDR0 H

OUTPIN 13  L X X H L L X L X X X X X X X MDM GRANT L * /UBERR H * DLYD SSYN H * /INIT H * /MDMDR0 H

OUTPIN 12  X X X X X X X X X L X X X X X X DEC MDMAT L
           X X X X X X X X X X L X X X X X INC MDMAT L
           X X X X X H X X X X X X X X X X UBERR H
           X X X X X X X H X X X X X X X X INIT H
```


REVISIONS		
CHK	CHANGE NO.	REV

digital

DRN: K. Sargent
CHK'D: Ken Sargent
DSK:PRTTT2.T2P[4,112] 23-MAY-83 15:33
FIRST USED ON OPTION/MODEL: DELNA

DATE 23-MAY-83 ENG. Rick Szmauz DATE 23-MAY-83
DATE 23-MAY-83 BOARD LOCATION: SHEET 1 OF 1
NEXT HIGHER ASSEMBLY: D-UA-M7792-0-0

TITLE: DELNA PORT MODULE PAL LISTINGS

SIZE	CODE	NUMBER	REV.
K	CS	M7792-0-TT2	A

TW

PART NUMBER: 23-070K3-00

LOCATION: E101

DEVICE TYPE: PAL16R4
PIN NUMBER = SYMBOL TABLE:

1= 10MHZ	8= NC2 H	15= ENB RW L
2= RX REQ H	9= INIT H	16= NC3 L
3= TX REQ H	10= GND	17= MEM DONE L
4= DMA REQ L	11= GND	18= T11 ACK L
5= T11 REQ H	12= RX ACK L	19= DMA ACK L
6= MEM BUSY H	13= TX ACK L	20= VCC
7= NC1 H	14= ARB STATE L	

NOTES: LNKRB - (PRTP)
FOR PAL LNKRB-B (LINK MEMORY ARBITER - REV B)

```
PAL PINS:  |0|0|0|0|0|0|0|0|1|1|1|1|1|1|1|1|1|1|
           |2|3|4|5|6|7|8|9|2|3|4|5|6|7|8|9|

OUTPIN 19  X X X X X X X X X X X X X X X X X VCC
           L L L X X X X X L X X L H X X X X /RX REQ H * /TX REQ H * DMA REQ L * ARB STATE L * /ENB RW L * /INIT H
           X X L X X X X L H H L X X X H L DMA ACK L * DMA REQ L * ARB STATE L * /RX ACK L * /TX ACK L * /T11 ACK L * /INIT H
           X X X X X X X L H H X L X X H L DMA ACK L * ENB RW L * /RX ACK L * /TX ACK L * /T11 ACK L * /INIT H

OUTPIN 18  X X X X X X X X X X X X X X X X X VCC
           L L H H X X X L X X L H X X X X /RX REQ H * /TX REQ H * /DMA REQ L * T11 REQ H * ARB STATE L * /ENB RW L * /INIT H
           X X X H X X X L H H L X X X L H T11 ACK L * T11 REQ H * ARB STATE L * /RX ACK L * /TX ACK L * /DMA ACK L * /INIT H
           X X X X X X X L H H X L X X L H T11 ACK L * ENB RW L * /RX ACK L * /TX ACK L * /DMA ACK L * /INIT H

OUTPIN 17  X X X X X X X L X X L L X X X X ENB RW L * ARB STATE L * /INIT H

OUTPIN 16

OUTPIN 15  H X X X X X X L X X L X X X X X RX REQ H * ARB STATE L * /INIT H
           X H X X X X X L X X L X X X X X TX REQ H * ARB STATE L * /INIT H
           X X L X X X X L X X L X X X X X DMA REQ L * ARB STATE L * /INIT H
           X X X H X X X L X X L X X X X X T11 REQ H * ARB STATE L * /INIT H
           X X X X X X X L X X X L X H X X ENB RW L * /MEM DONE L * /INIT H

OUTPIN 14  X X X X X X X H X X X X X X X X INIT H
           X X X X X X X L X X L H X X X X /ENB RW L * ARB STATE L * /INIT H
           X X X X X X X L X X H L X X X X ENB RW L * /ARB STATE L * /INIT H
           X X X X X X X L X X H H X X X X /ENB RW L * /ARB STATE L * /INIT H

OUTPIN 13  X X X X X X X X X X X X X X X X VCC
           L H X X X X X L X X L H X X X X /RX REQ H * TX REQ H * ARB STATE L * /ENB RW L * /INIT H
           X H X X X X X L H L L X X X H H TX ACK L * TX REQ H * ARB STATE L * /RX ACK L * /DMA ACK L * /T11 ACK L * /INIT H
           X X X X X X X L H L X L X X H H TX ACK L * ENB RW L * /RX ACK L * /DMA ACK L * /T11 ACK L * /INIT H

OUTPIN 12  X X X X X X X X X X X X X X X X VCC
           H X X X X X X L X X L H X X X X RX REQ H * ARB STATE L * /ENB RW L * /INIT H
           H X X X X X X L L H L X X X H H RX ACK L * RX REQ H * ARB STATE L * /TX ACK L * /DMA ACK L * /T11 ACK L * /INIT H
           X X X X X X X L L H X L X X H H RX ACK L * ENB RW L * /TX ACK L * /DMA ACK L * /T11 ACK L * /INIT H
```


REVISIONS		
CHK	CHANGE NO.	REV

DRN: K. Sargent — DATE 23-MAY-83 — ENG. Rick Szmaux — DATE 23-MAY-83
CHK'D. Ken Sargent — DATE 23-MAY-83 — BOARD LOCATION: — SHEET 1 OF 1
DSK:PRTTT3.T2PL4,1121 23-MAY-83 15:33 — NEXT HIGHER ASSEMBLY:
FIRST USED ON OPTION/MODEL: DELNA — C-UA-M7792-0-0

TITLE: DELNA PORT MODULE PAL LISTINGS

SIZE	CODE	NUMBER	REV.
K	CS	M7792-0-TT3	A

TW

SARGENT, DSKE:<SARGENT>PRTTT3.DPL.1, SCALE 2, "D" RELEASE BOX, SIGNED OFF

>SET DRAWN;DSKE:<SARGENT>KLS.SIG
.SET ENGINEERED;"Rick Szmauz

PART NUMBER: 23-119J5-00

LOCATION: E2, E39

DEVICE TYPE: PAL16L8
PIN NUMBER = SYMBOL TABLE:

1= UB WT HB H	8= BDAL 13 H	15= PCEIR L
2= T11 WT L	9= INIT L	16= PCEIS L
3= DATA 15 H	10= GND	17= SERIR L
4= DATA 14 H	11= NC1 H	18= SERIS L
5= DATA 13 H	12= NC2 H	19= NC3 H
6= BDAL 15 H	13= RXIR L	20= VCC
7= BDAL 14 H	14= RXIS L	

NOTES: PCSRA - (PRTM)
FOR PAL PCSRA-A (PCSR0 SECTION A - REV A)

```
                 |0|0|0|0|0|0|0|0|0|1|1|1|1|1|1|1|1|
PAL PINS:        |1|2|3|4|5|6|7|8|9|1|3|4|5|6|7|8|

OUTPIN 19

OUTPIN 18  X X X X X X X X X X X X X X X VCC H
           X X X X X X X L X X X X X X INIT L
           H X H X X X X X X X X X X X UB WT HB H * DATA 15 H
           X X X X X X X X X X X X H X /SERIR L

OUTPIN 17  X X X X X X X X X X X X X X VCC H
           X L X X X H X X X X X X X X T11 WT L * BDAL 15 H
           X X X X X X X X X X X X X H /SERIS L

OUTPIN 16  X X X X X X X X X X X X X X VCC H
           X X X X X X X L X X X X X X INIT L
           H X X H X X X X X X X X X X UB WT HB H * DATA 14 H
           X X X X X X X X X X X H X X /PCEIR L

OUTPIN 15  X X X X X X X X X X X X X X VCC H
           X L X X X X H X X X X X X X T11 WT L * BDAL 14 H
           X X X X X X X X X X X X H X /PCEIS L

OUTPIN 14  X X X X X X X X X X X X X X VCC H
           X X X X X X X L X X X X X X INIT L
           H X X X H X X X X X X X X X UB WT HB H * DATA 13 H
           X X X X X X X X X X H X X X /RXIR L

OUTPIN 13  X X X X X X X X X X X X X X VCC H
           X L X X X X H X X X X X X X T11 WT L * BDAL 13 H
           X X X X X X X X X X X H X X /RXIS L

OUTPIN 12
```


REVISIONS		
CHK	CHANGE NO.	REV

digital

DRN. K.Toomby DATE 08-JUN-84 ENG. DATE
CHK'D. Ken Sargent DATE 08-JUN-84 BOARD LOCATION:
DSK:PRTTT4.T2P[4,112] 08-JUN-84 10:20 SHEET 1 OF 1
FIRST USED ON OPTION/MODEL: DELUNA NEXT HIGHER ASSEMBLY: D-UA-M7792-0-0

TITLE: DELUNA PORT MODULE PAL LISTINGS

SIZE	CODE	NUMBER	REV.
K	CS	M7792-0-TT4	B

PART NUMBER: 23-118J5-00

LOCATION: E50

DEVICE TYPE: PAL16L8
PIN NUMBER = SYMBOL TABLE:

1= UB WT HB H	8= NC5 H	15= NC8 H
2= T11 WT L	9= INIT L	16= INTE L
3= DATA 08 H	10= GND	17= FATIR L
4= DATA 06 H	11= UB WT LB H	18= FATIS L
5= NC3 H	12= NC2 H	19= NC9 H
6= BDAL 08 H	13= NC6 H	20= VCC
7= NC4 H	14= NC7 H	

NOTES: PCSRC - (PRTM)
FOR PAL PCSRC-A (PCSR0 SECTION C - REV A)

```
          |0|0|0|0|0|0|0|0|0|1|1|1|1|1|1|1|1|
PAL PINS: |1|2|3|4|5|6|7|8|9|1|3|4|5|6|7|8|

OUTPIN 19

OUTPIN 18  X X X X X X X X X X X X X X X VCC
           X X X X X X X X L X X X X X X INIT L
           H X H X X X X X X X X X X X X UB WT HB H * DATA 08 H
           X X X X X X X X X X X X X H X /FATIR L

OUTPIN 17  X X X X X X X X X X X X X X X VCC
           X L X X X H X X X X X X X X X T11 WT L * BDAL 08 H
           X X X X X X X X X X X X X X H /FATIS L

OUTPIN 16  X X X X X X X X X X X X X X X VCC
           X X X X X X X X L X X X X X X INIT L
           X X X L X X X X X H X X X X X UB WT LB H * /DATA 06 H
           X X X X X X X X X L X X X L X X /UB WT LB H * INTE L
           X X X L X X X X X X X X L X X INTE L * /DATA 06 H

OUTPIN 15

OUTPIN 14

OUTPIN 13

OUTPIN 12
```


REVISIONS		
CHK	CHANGE NO.	REV

DRN: K.J. Sargent | DATE 08-JUN-84 | ENG. Rick Szmauz | DATE 08-JUN-84
CHK'D. Ken Sargent | DATE 08-JUN-84 | BOARD LOCATION: SHEET 1 OF 1
DSK:PRTTT5.T2P[4,112] 08-JUN-84 10:21 | NEXT HIGHER ASSEMBLY: D-UA-M7792-0-0
FIRST USED ON OPTION/MODEL: DEUNA

TITLE: DEUNA PORT MODULE PAL LISTINGS

SIZE	CODE	NUMBER	REV.
K	CS	M7792-0-TT5	B

SARGENT, DSKE:<SARGENT>PRTTT5.DPL.1, SCALE 2, "D" RELEASE BOX, SIGNED OFF

DEC LOC	HEX LOC	OCT LOC	OCT DAT	HEX DAT	BIN DAT
0	000	000	17	F	1111
1	001	001	07	7	0111
2	002	002	10	8	1000
3	003	003	07	7	0111
4	004	004	13	B	1011
5	005	005	07	7	0111
6	006	006	10	8	1000
7	007	007	07	7	0111
8	008	010	16	E	1110
9	009	011	07	7	0111
10	00A	012	10	8	1000
11	00B	013	07	7	0111
12	00C	014	13	B	1011
13	00D	015	07	7	0111
14	00E	016	10	8	1000
15	00F	017	07	7	0111
16	010	020	11	9	1001
17	011	021	07	7	0111
18	012	022	11	9	1001
19	013	023	07	7	0111
20	014	024	11	9	1001
21	015	025	07	7	0111
22	016	026	11	9	1001
23	017	027	07	7	0111
24	018	030	11	9	1001
25	019	031	07	7	0111
26	01A	032	11	9	1001
27	01B	033	07	7	0111
28	01C	034	11	9	1001
29	01D	035	07	7	0111
30	01E	036	11	9	1001
31	01F	037	07	7	0111
32	020	040	02	2	0010
33	021	041	02	2	0010
34	022	042	02	2	0010
35	023	043	02	2	0010
36	024	044	02	2	0010
37	025	045	02	2	0010
38	026	046	02	2	0010
39	027	047	02	2	0010
40	028	050	02	2	0010
41	029	051	02	2	0010
42	02A	052	02	2	0010
43	02B	053	02	2	0010
44	02C	054	02	2	0010
45	02D	055	02	2	0010
46	02E	056	02	2	0010
47	02F	057	02	2	0010
48	030	060	02	2	0010
49	031	061	02	2	0010
50	032	062	02	2	0010
51	033	063	02	2	0010
52	034	064	02	2	0010
53	035	065	02	2	0010
54	036	066	02	2	0010
55	037	067	02	2	0010
56	038	070	02	2	0010
57	039	071	02	2	0010
58	03A	072	02	2	0010
59	03B	073	02	2	0010
60	03C	074	02	2	0010
61	03D	075	02	2	0010
62	03E	076	02	2	0010
63	03F	077	02	2	0010
64	040	100	15	D	1101
65	041	101	07	7	0111
66	042	102	10	8	1000
67	043	103	07	7	0111
68	044	104	13	B	1011
69	045	105	07	7	0111
70	046	106	10	8	1000
71	047	107	07	7	0111
72	048	110	15	D	1101
73	049	111	07	7	0111
74	04A	112	10	8	1000
75	04B	113	07	7	0111
76	04C	114	13	B	1011
77	04D	115	07	7	0111
78	04E	116	10	8	1000
79	04F	117	07	7	0111
80	050	120	11	9	1001
81	051	121	07	7	0111
82	052	122	11	9	1001
83	053	123	07	7	0111
84	054	124	11	9	1001
85	055	125	07	7	0111
86	056	126	11	9	1001
87	057	127	07	7	0111
88	058	130	11	9	1001
89	059	131	07	7	0111
90	05A	132	11	9	1001
91	05B	133	07	7	0111
92	05C	134	11	9	1001
93	05D	135	07	7	0111
94	05E	136	11	9	1001
95	05F	137	07	7	0111
96	060	140	02	2	0010
97	061	141	02	2	0010
98	062	142	02	2	0010
99	063	143	02	2	0010
100	064	144	02	2	0010
101	065	145	02	2	0010
102	066	146	02	2	0010
103	067	147	02	2	0010
104	068	150	02	2	0010
105	069	151	02	2	0010
106	06A	152	02	2	0010
107	06B	153	02	2	0010
108	06C	154	02	2	0010
109	06D	155	02	2	0010
110	06E	156	02	2	0010
111	06F	157	02	2	0010
112	070	160	02	2	0010
113	071	161	02	2	0010
114	072	162	02	2	0010
115	073	163	02	2	0010
116	074	164	02	2	0010
117	075	165	02	2	0010
118	076	166	02	2	0010
119	077	167	02	2	0010
120	078	170	02	2	0010
121	079	171	02	2	0010
122	07A	172	02	2	0010
123	07B	173	02	2	0010
124	07C	174	02	2	0010
125	07D	175	02	2	0010
126	07E	176	02	2	0010
127	07F	177	02	2	0010
128	080	200	00	0	0000
129	081	201	00	0	0000
130	082	202	00	0	0000
131	083	203	00	0	0000
132	084	204	00	0	0000
133	085	205	00	0	0000
134	086	206	00	0	0000
135	087	207	00	0	0000
136	088	210	00	0	0000
137	089	211	00	0	0000
138	08A	212	00	0	0000
139	08B	213	00	0	0000
140	08C	214	00	0	0000
141	08D	215	00	0	0000
142	08E	216	00	0	0000
143	08F	217	00	0	0000
144	090	220	00	0	0000
145	091	221	00	0	0000
146	092	222	00	0	0000
147	093	223	00	0	0000
148	094	224	00	0	0000
149	095	225	00	0	0000
150	096	226	00	0	0000
151	097	227	00	0	0000
152	098	230	00	0	0000
153	099	231	00	0	0000
154	09A	232	00	0	0000
155	09B	233	00	0	0000
156	09C	234	00	0	0000
157	09D	235	00	0	0000
158	09E	236	00	0	0000
159	09F	237	00	0	0000
160	0A0	240	00	0	0000
161	0A1	241	00	0	0000
162	0A2	242	00	0	0000
163	0A3	243	00	0	0000
164	0A4	244	00	0	0000
165	0A5	245	00	0	0000
166	0A6	246	00	0	0000
167	0A7	247	00	0	0000
168	0A8	250	00	0	0000
169	0A9	251	00	0	0000
170	0AA	252	00	0	0000
171	0AB	253	00	0	0000
172	0AC	254	00	0	0000
173	0AD	255	00	0	0000
174	0AE	256	00	0	0000
175	0AF	257	00	0	0000
176	0B0	260	00	0	0000
177	0B1	261	00	0	0000
178	0B2	262	00	0	0000
179	0B3	263	00	0	0000
180	0B4	264	00	0	0000
181	0B5	265	00	0	0000
182	0B6	266	00	0	0000
183	0B7	267	00	0	0000
184	0B8	270	00	0	0000
185	0B9	271	00	0	0000
186	0BA	272	00	0	0000
187	0BB	273	00	0	0000
188	0BC	274	00	0	0000
189	0BD	275	00	0	0000
190	0BE	276	00	0	0000
191	0BF	277	00	0	0000
192	0C0	300	00	0	0000
193	0C1	301	00	0	0000
194	0C2	302	00	0	0000
195	0C3	303	00	0	0000
196	0C4	304	00	0	0000
197	0C5	305	00	0	0000
198	0C6	306	00	0	0000
199	0C7	307	00	0	0000
200	0C8	310	00	0	0000
201	0C9	311	00	0	0000
202	0CA	312	00	0	0000
203	0CB	313	00	0	0000
204	0CC	314	00	0	0000
205	0CD	315	00	0	0000
206	0CE	316	00	0	0000
207	0CF	317	00	0	0000
208	0D0	320	00	0	0000
209	0D1	321	00	0	0000
210	0D2	322	00	0	0000
211	0D3	323	00	0	0000
212	0D4	324	00	0	0000
213	0D5	325	00	0	0000
214	0D6	326	00	0	0000
215	0D7	327	00	0	0000
216	0D8	330	00	0	0000
217	0D9	331	00	0	0000
218	0DA	332	00	0	0000
219	0DB	333	00	0	0000
220	0DC	334	00	0	0000
221	0DD	335	00	0	0000
222	0DE	336	00	0	0000
223	0DF	337	00	0	0000
224	0E0	340	00	0	0000
225	0E1	341	00	0	0000
226	0E2	342	00	0	0000
227	0E3	343	00	0	0000
228	0E4	344	00	0	0000
229	0E5	345	00	0	0000
230	0E6	346	00	0	0000
231	0E7	347	00	0	0000
232	0E8	350	00	0	0000
233	0E9	351	00	0	0000
234	0EA	352	00	0	0000
235	0EB	353	00	0	0000
236	0EC	354	00	0	0000
237	0ED	355	00	0	0000
238	0EE	356	00	0	0000
239	0EF	357	00	0	0000
240	0F0	360	00	0	0000
241	0F1	361	00	0	0000
242	0F2	362	00	0	0000
243	0F3	363	00	0	0000
244	0F4	364	00	0	0000
245	0F5	365	00	0	0000
246	0F6	366	00	0	0000
247	0F7	367	00	0	0000
248	0F8	370	00	0	0000
249	0F9	371	00	0	0000
250	0FA	372	00	0	0000
251	0FB	373	00	0	0000
252	0FC	374	00	0	0000
253	0FD	375	00	0	0000
254	0FE	376	00	0	0000
255	0FF	377	00	0	0000
256	100	400	04	4	0100
257	101	401	04	4	0100
258	102	402	04	4	0100
259	103	403	04	4	0100
260	104	404	04	4	0100
261	105	405	04	4	0100
262	106	406	04	4	0100
263	107	407	04	4	0100
264	108	410	04	4	0100
265	109	411	04	4	0100
266	10A	412	04	4	0100
267	10B	413	04	4	0100
268	10C	414	04	4	0100
269	10D	415	04	4	0100
270	10E	416	04	4	0100
271	10F	417	04	4	0100
272	110	420	04	4	0100
273	111	421	04	4	0100
274	112	422	04	4	0100
275	113	423	04	4	0100
276	114	424	04	4	0100
277	115	425	04	4	0100
278	116	426	04	4	0100
279	117	427	04	4	0100
280	118	430	04	4	0100
281	119	431	04	4	0100
282	11A	432	04	4	0100
283	11B	433	04	4	0100
284	11C	434	04	4	0100
285	11D	435	04	4	0100
286	11E	436	04	4	0100
287	11F	437	04	4	0100
288	120	440	02	2	0010
289	121	441	02	2	0010
290	122	442	02	2	0010
291	123	443	02	2	0010
292	124	444	02	2	0010
293	125	445	02	2	0010
294	126	446	02	2	0010
295	127	447	02	2	0010
296	128	450	02	2	0010
297	129	451	02	2	0010
298	12A	452	02	2	0010
299	12B	453	02	2	0010
300	12C	454	02	2	0010
301	12D	455	02	2	0010
302	12E	456	02	2	0010
303	12F	457	02	2	0010
304	130	460	02	2	0010
305	131	461	02	2	0010
306	132	462	02	2	0010
307	133	463	02	2	0010
308	134	464	02	2	0010
309	135	465	02	2	0010
310	136	466	02	2	0010
311	137	467	02	2	0010
312	138	470	02	2	0010
313	139	471	02	2	0010
314	13A	472	02	2	0010
315	13B	473	02	2	0010
316	13C	474	02	2	0010
317	13D	475	02	2	0010
318	13E	476	02	2	0010
319	13F	477	02	2	0010
320	140	500	04	4	0100
321	141	501	04	4	0100
322	142	502	04	4	0100
323	143	503	04	4	0100
324	144	504	04	4	0100
325	145	505	04	4	0100
326	146	506	04	4	0100
327	147	507	04	4	0100
328	148	510	04	4	0100
329	149	511	04	4	0100
330	14A	512	04	4	0100
331	14B	513	04	4	0100
332	14C	514	04	4	0100
333	14D	515	04	4	0100
334	14E	516	04	4	0100
335	14F	517	04	4	0100
336	150	520	04	4	0100
337	151	521	04	4	0100
338	152	522	04	4	0100
339	153	523	04	4	0100
340	154	524	04	4	0100
341	155	525	04	4	0100
342	156	526	04	4	0100
343	157	527	04	4	0100
344	158	530	04	4	0100
345	159	531	04	4	0100
346	15A	532	04	4	0100
347	15B	533	04	4	0100
348	15C	534	04	4	0100
349	15D	535	04	4	0100
350	15E	536	04	4	0100
351	15F	537	04	4	0100
352	160	540	02	2	0010
353	161	541	02	2	0010
354	162	542	02	2	0010
355	163	543	02	2	0010
356	164	544	02	2	0010
357	165	545	02	2	0010
358	166	546	02	2	0010
359	167	547	02	2	0010
360	168	550	02	2	0010
361	169	551	02	2	0010
362	16A	552	02	2	0010
363	16B	553	02	2	0010
364	16C	554	02	2	0010
365	16D	555	02	2	0010
366	16E	556	02	2	0010
367	16F	557	02	2	0010
368	170	560	02	2	0010
369	171	561	02	2	0010
370	172	562	02	2	0010
371	173	563	02	2	0010
372	174	564	02	2	0010
373	175	565	02	2	0010
374	176	566	02	2	0010
375	177	567	02	2	0010
376	178	570	02	2	0010
377	179	571	02	2	0010
378	17A	572	02	2	0010
379	17B	573	02	2	0010
380	17C	574	02	2	0010
381	17D	575	02	2	0010
382	17E	576	02	2	0010
383	17F	577	02	2	0010
384	180	600	00	0	0000
385	181	601	00	0	0000
386	182	602	00	0	0000
387	183	603	00	0	0000
388	184	604	00	0	0000
389	185	605	00	0	0000
390	186	606	00	0	0000
391	187	607	00	0	0000
392	188	610	00	0	0000
393	189	611	00	0	0000
394	18A	612	00	0	0000
395	18B	613	00	0	0000
396	18C	614	00	0	0000
397	18D	615	00	0	0000
398	18E	616	00	0	0000
399	18F	617	00	0	0000
400	190	620	00	0	0000
401	191	621	00	0	0000
402	192	622	00	0	0000
403	193	623	00	0	0000
404	194	624	00	0	0000
405	195	625	00	0	0000
406	196	626	00	0	0000
407	197	627	00	0	0000
408	198	630	00	0	0000
409	199	631	00	0	0000
410	19A	632	00	0	0000
411	19B	633	00	0	0000
412	19C	634	00	0	0000
413	19D	635	00	0	0000
414	19E	636	00	0	0000
415	19F	637	00	0	0000
416	1A0	640	00	0	0000
417	1A1	641	00	0	0000
418	1A2	642	00	0	0000
419	1A3	643	00	0	0000
420	1A4	644	00	0	0000
421	1A5	645	00	0	0000
422	1A6	646	00	0	0000
423	1A7	647	00	0	0000
424	1A8	650	00	0	0000
425	1A9	651	00	0	0000
426	1AA	652	00	0	0000
427	1AB	653	00	0	0000
428	1AC	654	00	0	0000
429	1AD	655	00	0	0000
430	1AE	656	00	0	0000
431	1AF	657	00	0	0000
432	1B0	660	00	0	0000
433	1B1	661	00	0	0000
434	1B2	662	00	0	0000
435	1B3	663	00	0	0000
436	1B4	664	00	0	0000
437	1B5	665	00	0	0000
438	1B6	666	00	0	0000
439	1B7	667	00	0	0000
440	1B8	670	00	0	0000
441	1B9	671	00	0	0000
442	1BA	672	00	0	0000
443	1BB	673	00	0	0000
444	1BC	674	00	0	0000
445	1BD	675	00	0	0000
446	1BE	676	00	0	0000
447	1BF	677	00	0	0000
448	1C0	700	00	0	0000
449	1C1	701	00	0	0000
450	1C2	702	00	0	0000
451	1C3	703	00	0	0000
452	1C4	704	00	0	0000
453	1C5	705	00	0	0000
454	1C6	706	00	0	0000
455	1C7	707	00	0	0000
456	1C8	710	00	0	0000
457	1C9	711	00	0	0000
458	1CA	712	00	0	0000
459	1CB	713	00	0	0000
460	1CC	714	00	0	0000
461	1CD	715	00	0	0000
462	1CE	716	00	0	0000
463	1CF	717	00	0	0000
464	1D0	720	00	0	0000
465	1D1	721	00	0	0000
466	1D2	722	00	0	0000
467	1D3	723	00	0	0000
468	1D4	724	00	0	0000
469	1D5	725	00	0	0000
470	1D6	726	00	0	0000
471	1D7	727	00	0	0000
472	1D8	730	00	0	0000
473	1D9	731	00	0	0000
474	1DA	732	00	0	0000
475	1DB	733	00	0	0000
476	1DC	734	00	0	0000
477	1DD	735	00	0	0000
478	1DE	736	00	0	0000
479	1DF	737	00	0	0000
480	1E0	740	00	0	0000
481	1E1	741	00	0	0000
482	1E2	742	00	0	0000
483	1E3	743	00	0	0000
484	1E4	744	00	0	0000
485	1E5	745	00	0	0000
486	1E6	746	00	0	0000
487	1E7	747	00	0	0000
488	1E8	750	00	0	0000
489	1E9	751	00	0	0000
490	1EA	752	00	0	0000
491	1EB	753	00	0	0000
492	1EC	754	00	0	0000
493	1ED	755	00	0	0000
494	1EE	756	00	0	0000
495	1EF	757	00	0	0000
496	1F0	760	00	0	0000
497	1F1	761	00	0	0000
498	1F2	762	00	0	0000
499	1F3	763	00	0	0000
500	1F4	764	00	0	0000
501	1F5	765	00	0	0000
502	1F6	766	00	0	0000
503	1F7	767	00	0	0000
504	1F8	770	00	0	0000
505	1F9	771	00	0	0000
506	1FA	772	00	0	0000
507	1FB	773	00	0	0000
508	1FC	774	00	0	0000
509	1FD	775	00	0	0000
510	1FE	776	00	0	0000
511	1FF	777	00	0	0000

PART NUMBER: 23-992A9-00

LOCATION: E98

DEVICE TYPE: PROM, 512 X 4

NOTES: T11 Interrupt - (PRTE)
Refer to TDI Drawing
for Timing Relationships

REVISIONS		
CHK	CHANGE NO.	REV

digital

DRN: Ken Sargent | DATE 09-JUN-83 | ENG. Rick Szmauz | DATE 09-JUN-83
CHK: D. Ken Sargent | DATE 09-JUN-83 | BOARD LOCATION: SHEET 1 OF 1
DSK:PRITT6.T2P[4,112] 09-JUN-83 05:34 | NEXT HIGHER ASSEMBLY:
FIRST USED ON OPTION/MODEL: DEUNA | D-UA-M7792-0-0

TITLE: DEUNA PORT MODULE PROM PATTERN LISTING

SIZE	CODE	NUMBER	REV.
K	CS	M7792-0-TT6	A

PART NUMBER: 23-090C6-00

LOCATION: E125

DEVICE TYPE: Logic Array, Field Programmable

NOTES: INTERNAL REGISTER SELECT - (PRTE)

PROGRAM TABLE ENTRIES

INPUT VARIABLE			OUTPUT FUNCTION		OUTPUT ACTIVE LEVEL	
Im	Im	Don't Care	Prod. Term Present in Fp	Prod. Term Not Present in Fp	ACTIVE HIGH	ACTIVE LOW
H	L	- (dash)	A	. (period)	H	L
Note: Enter (-) for unused inputs of used P-terms			Notes: 1. Entries independent of output polarity 2. Enter (A) for unused outputs of used P-terms		Notes: 1. Polarity prog. once only 2. Enter (H) for all unused outputs	

PRODUCT TERM*																ACTIVE LEVEL							
INPUT VARIABLE																L	L	H	L	L	H	L	H
NO.	1	1	1	1	1											OUTPUT FUNCTION*							
	5	4	3	2	1	0	9	8	7	6	5	4	3	2	1	0	7	6	5	4	3	2	1	0
0	H	H	H	H	H	H	H	H	H	H	H	H	H	H	H	L	A	.	.	.	.	.	.	.
1	H	H	H	H	H	H	H	H	H	H	H	H	H	H	H	H	.	A	.	.	.	.	.	.
2	-	L	L	H	L	L	L	H	L	L	L	L	L	H	H	L	.	.	A	.	.	.	.	.
3	-	L	L	H	L	L	L	H	L	L	L	L	H	L	H	H	.	.	A	.	.	.	.	.
4	L	L	L	H	L	L	L	H	L	L	L	L	L	H	H	L	.	.	.	A	.	.	.	.
5	L	L	L	H	L	L	L	H	L	L	L	L	L	H	H	L	.	.	.	A	.	.	.	.
6	H	L	L	H	L	L	L	H	L	L	L	L	H	L	H	H	.	.	.	A	.	.	.	.
7	H	L	L	H	L	L	L	H	L	L	L	L	H	H	H	H	.	.	.	A	.	.	.	.
8	-	L	L	H	L	L	L	H	L	L	-	-	-	-	-	-	.	.	.	.	A	.	.	.
9	-	H	-	-	-	-	-	-	-	-	-	-	-	-	-	-	.	.	.	.	.	A	.	.
10	-	L	H	-	-	-	-	-	-	-	-	-	-	-	-	-	.	.	.	.	.	.	A	.
11	-	L	L	L	-	-	-	-	-	-	-	-	-	-	-	-	.	.	.	.	.	.	.	A
12																								
13																								
14																								
15																								
16																								
17																								
18																								
19																								
20																								
21																								
22																								
23																								
24																								
25																								
26																								
27																								
28																								
29																								
30																								
31																								
32																								
33																								
34																								
35																								
36																								
37																								
38																								
39																								
40																								
41																								
42																								
43																								
44																								
45																								
46																								
47																								

REVISIONS		
CHK	CHANGE NO.	REV

DRN. Ken Sargent DATE 10-JUN-83 ENG. Rick Szmaux DATE 10-JUN-83

CHK'D. Ken Sargent DATE 10-JUN-83 BOARD LOCATION: SHEET 1 OF 1

DSK:PRTT17.T2P[4,112] 10-JUN-83 09:19 NEXT HIGHER ASSEMBLY:

FIRST USED ON OPTION/MODEL: DELUNA D-UA-M7792-0-0

TITLE: DELUNA PORT MODULE FPLA PATTERN LISTING

SIZE	CODE	NUMBER	REV.
K	CS	M7792-0-TT7	A

PART NUMBER: 23-367A1-00

LOCATION: E53

DEVICE TYPE: PROM, 32 X 8, TTL, Tri-State

DEC LOC	HEX LOC	OCT LOC	OCT DAT	HEX DAT	BIN DAT
0	00	00	000	00	00000000
1	01	01	000	00	00000000
2	02	02	000	00	00000000
3	03	03	000	00	00000000
4	04	04	000	00	00000000
5	05	05	000	00	00000000
6	06	06	000	00	00000000
7	07	07	003	03	00000011
8	08	10	000	00	00000000
9	09	11	003	03	00000011
10	0A	12	000	00	00000000
11	0B	13	001	01	00000001
12	0C	14	000	00	00000000
13	0D	15	002	02	00000010
14	0E	16	000	00	00000000
15	0F	17	000	00	00000000
16	10	20	000	00	00000000
17	11	21	000	00	00000000
18	12	22	000	00	00000000
19	13	23	000	00	00000000
20	14	24	000	00	00000000
21	15	25	000	00	00000000
22	16	26	000	00	00000000
23	17	27	000	00	00000000
24	18	30	000	00	00000000
25	19	31	000	00	00000000
26	1A	32	000	00	00000000
27	1B	33	000	00	00000000
28	1C	34	000	00	00000000
29	1D	35	000	00	00000000
30	1E	36	000	00	00000000
31	1F	37	000	00	00000000

NOTES: WCS Decode - (PRTF)

REVISIONS		
CHK	CHANGE NO.	REV

digital

DRN: Ken Sargent DATE 10-JUN-83
CHK'D: Ken Sargent DATE 10-JUN-83
ENG. Rick Szmaux DATE 10-JUN-83
BOARD LOCATION:
SHEET 1 OF 1
DSK:PRITT8.T2P[4,112] 10-JUN-83 09:19
NEXT HIGHER ASSEMBLY: D-UA-M7792-0-0
FIRST USED ON OPTION/MODEL: DELUNA

TITLE: DELUNA PORT MODULE PROM PATTERN LISTING

SIZE	CODE	NUMBER	REV.
K	CS	M7792-0-TT8	A

PART NUMBER: 23-366A1-00

LOCATION: E133

DEVICE TYPE: PROM, 32 X 8, TTL, Tri-State

DEC LOC	HEX LOC	OCT LOC	OCT DAT	HEX DAT	BIN DAT
0	00	00	000	00	00000000
1	01	01	000	00	00000000
2	02	02	000	00	00000000
3	03	03	000	00	00000000
4	04	04	000	00	00000000
5	05	05	000	00	00000000
6	06	06	000	00	00000000
7	07	07	000	00	00000000
8	08	10	000	00	00000000
9	09	11	000	00	00000000
10	0A	12	000	00	00000000
11	0B	13	000	00	00000000
12	0C	14	000	00	00000000
13	0D	15	000	00	00000000
14	0E	16	000	00	00000000
15	0F	17	000	00	00000000
16	10	20	003	03	00000011
17	11	21	000	00	00000000
18	12	22	000	00	00000000
19	13	23	000	00	00000000
20	14	24	014	0C	00001100
21	15	25	300	00	00000000
22	16	26	020	10	00010000
23	17	27	000	00	00000000
24	18	30	001	01	00000001
25	19	31	002	02	00000010
26	1A	32	000	00	00000000
27	1B	33	000	00	00000000
28	1C	34	004	04	00000100
29	1D	35	010	08	00001000
30	1E	36	020	10	00010000
31	1F	37	000	00	00000000

NOTES: UB Control - (PRTL)

REVISIONS		
CHK	CHANGE NO.	REV

DRN: Ken Sargent — DATE 10-JUN-83 — ENG. Rick Szmauz — DATE 10-JUN-83

CHK'D. Ken Sargent — DATE 10-JUN-83 — BOARD LOCATION: SHEET 1 OF 1

DSK:PRTT[9,T2PE[4,112]] 10-JUN-83 09:19 — NEXT HIGHER ASSEMBLY: D-UA-M7792-0-0

FIRST USED ON OPTION/MODEL: DEUNA

TITLE: DEUNA PORT MODULE PROM PATTERN LISTING

SIZE	CODE	NUMBER	REV.
K	CS	M7792-0-TT9	A

DRAWING DIRECTORY

ITEM	DRAWING NO.	NO. OF SHTS	PART NO.	DESCRIPTION	TYPE	REVISIONS										
1			M7793	DEUNA LINK MODULE		A	B	C	D	E	E	E1				
2	D-UA-M7793-0-0	2		UNIT ASSEMBLY		A	B	C	D	E	F	H				
3	D-EC-5015005-0-0	3		ETCH CUT		A	B	C	D	E	E	F				
4	D-MD-5015005-0-0	5		DRILL AND ETCH		A	A	A	A	B	B	C				
5	K-PL-M7793-0-0	3		PARTS LIST		A	A	A	B	C	D	E				
6			5015005-00	ETCHED BOARD		B	B	B	B	C	C	D1				
7	K-PC-M7793-0-DBI	-		PC DATABASE		B	B	B	B	C	C	D				
8	K-CS-M7793-0-DBS	-		SUDS DATABASE		A	B	C	D	E	F	F				
9	K-CS-M7793-0-BD1	1		SCHEMATICS		A	A	A	A	A	A	A				
10	K-CS-M7793-0-SD1	1		SCHEMATICS		A	A	A	A	A	A	A				
11	K-CS-M7793-0-SD2	1		SCHEMATICS		A	A	A	A	A	A	A				
12	K-CS-M7793-0-SD3	1		SCHEMATICS		A	A	A	A	A	A	A				

NOTES:

USED ON OPTION/MODULE "DEUNA-AA",DEUNA-KP,DEUNA-M.

DD REV	A	B	C	D	E	F	H				

REVISION HISTORY			CONT. REVISION HISTORY		
ENG	ECO NUMBER	REV	ENG	ECO NUMBER	REV
ML	M7793-MK005	F			
ML	M7793-MK006	H			

MADE BY: M. MATTOCK
DATE: 25 MAR 85

CHECKED BY: F. CARBONE
DATE: 25 MAR 85

DESIGN ENGINEER: M. LAWRENCE
DATE: 25 MAR 85

RESPONSIBLE ENG: M. LAWRENCE
DATE: 25 MAR 85

PRODUCTION ENG: D. DUNCAN
DATE: 28 OCT 82

d i g i t a l

TITLE DRAWING DIRECTORY

DEUNA LINK MODULE

SIZE	CODE	DOCUMENT NUMBER	REV.
K	DD	M7793-0	H

SHEET 1 OF 3 MKO

DRAWING DIRECTORY CONTINUED

ITEM	DRAWING NO.	NO. OF SHTS	PART NO.	DESCRIPTION	TYPE	REVISIONS										
13	K-CS-M7793-0-SD4	1		SCHEMATIC		A	A	A	A	A	A	A				
14	K-CS-M7793-0-TDA	1		SCHEMATIC		A	A	A	A	A	A	A				
15	K-CS-M7793-0-TDB	1		SCHEMATIC		A	A	A	A	A	A	A				
16	K-CS-M7793-0-TDC	1		SCHEMATIC		A	A	A	A	A	A	A				
17	K-CS-M7793-0-TDD	1		SCHEMATIC		A	A	A	A	A	A	A				
18	K-CS-M7793-0-TDE	1		SCHEMATIC		A	A	A	A	A	A	A				
19	K-CS-M7793-0-TDF	1		SCHEMATIC		A	A	A	A	A	A	A				
20	K-CS-M7793-0-TDH	1		SCHEMATIC		A	A	A	A	A	A	A				
21	K-CS-M7793-0-TDJ	1		SCHEMATIC		A	A	A	A	A	A	A				
22	K-CS-M7793-0-TDK	1		SCHEMATIC		A	A	A	A	A	A	A				
23	K-CS-M7793-0-TDL	1		SCHEMATIC		A	A	A	A	A	A	A				
24	K-CS-M7793-0-TDM	1		SCHEMATIC		A	A	A	A	A	A	A				
25	K-CS-M7793-0-TDN	1		SCHEMATIC		A	A	A	A	A	A	A				
26	K-CS-M7793-0-TDP	1		SCHEMATIC		A	A	A	A	A	A	A				
27	K-CS-M7793-0-TDR	1		SCHEMATIC		A	A	A	A	A	A	A				
28	K-CS-M7793-0-TDS	1		SCHEMATIC		A	A	A	A	A	A	A				
29	K-CS-M7793-0-TDT	1		SCHEMATIC		A	A	A	A	A	A	A				
30	K-CS-M7793-0-TDU	1		SCHEMATIC		A	A	A	A	A	A	A				
31	K-CS-M7793-0-TDV	1		SCHEMATIC		A	A	A	A	A	A	A				
32	K-CS-M7793-0-TDW	1		SCHEMATIC		A	A	A	A	A	A	A				
33	K-CS-M7793-0-TTA	1		SCHEMATIC		A	A	A	A	A	A	A				
34	K-CS-M7793-0-TTB	1		SCHEMATIC		A	A	A	A	A	A	A				
35	K-CS-M7793-0-TTC	1		SCHEMATIC		A	A	A	A	A	A	A				
36	K-CS-M7793-0-TTD	1		SCHEMATIC		A	A	A	A	A	A	A				
37	K-CS-M7793-0-TTE	1		SCHEMATIC		A	A	A	A	A	A	A				
38	K-CS-M7793-0-TTF	1		SCHEMATIC		A	A	A	A	A	A	A				
39	K-CS-M7793-0-TTH	1		SCHEMATIC		A	A	A	A	A	A	A				
40	K-CS-M7793-0-TTJ	1		SCHEMATIC		A	A	A	A	A	A	A				

NOTES:

DD REV	A	B	C	D	E	F	H				

REVISION HISTORY			CONT. REVISION HISTORY		
ENG	ECO NUMBER	REV	ENG	ECO NUMBER	REV

MADE BY:
DATE:

CHECKED BY:
DATE:

DESIGN ENGINEER:
DATE:

RESPONSIBLE ENG:
DATE:

PRODUCTION ENG:
DATE:

d i g i t a l

TITLE DRAWING DIRECTORY

DEUNA LINK MODULE

SIZE	CODE	DOCUMENT NUMBER	REV.
K	DD	M7793-0	H

SHEET 2 OF 3 MKO

DRAWING DIRECTORY CONTINUED

ITEM	DRAWING NO.	NO. OF SHTS	PART NO.	DESCRIPTION	TYPE	REVISIONS										
41	K-CS-M7793-0-TTK	1		SCHEMATICS		A	A	A	A	A	A	A				
42	K-CS-M7793-0-TTL	1		SCHEMATICS		A	A	A	A	A	A	A				
43	K-CS-M7793-0-TTM	1		SCHEMATICS		A	A	A	A	A	A	A				
44	K-CS-M7793-0-IR1	1		SCHEMATICS		A	A	A	A	A	A	A				
45	K-CS-M7793-0-IR2	1		SCHEMATICS		A	A	A	A	A	A	A				
46	K-CS-M7793-0-LNKA	1		SCHEMATICS		A	B	C	C	D	D	D				
47	K-CS-M7793-0-LNKB	1		SCHEMATICS		A	A	A	B	C	C	C				
48	K-CS-M7793-0-LNKC	1		SCHEMATICS		A	A	B	B	C	C	C				
49	K-CS-M7793-0-LNKD	1		SCHEMATICS		A	A	A	A	A	B	B				
50	K-CS-M7793-0-LNKE	1		SCHEMATICS		A	B	B	B	B	B	B				
51	K-CS-M7793-0-LNKF	1		SCHEMATICS		A	A	A	A	A	B	B				
52	K-CS-M7793-0-LNKH	1		SCHEMATICS		A	B	C	C	C	D	D				
53	K-CS-M7793-0-LNKJ	1		SCHEMATICS		A	A	A	A	A	A	A				
54	K-CS-M7793-0-LNKK	1		SCHEMATICS		A	A	B	B	B	C	C				
55	K-CS-M7793-0-LNKL	1		SCHEMATICS		A	A	A	B	B	C	C				
56	K-CS-M7793-0-LNKM	1		SCHEMATICS		A	A	A	A	A	A	A				
57	K-CS-M7793-0-LNKN	1		SCHEMATICS		A	A	A	B	B	B	B				
58	K-CS-M7793-0-LNKP	1		SCHEMATICS		A	A	A	A	A	A	A				
59	K-CS-M7793-0-LNKR	1		SCHEMATICS		A	A	A	B	C	C	C				
60	K-CS-M7793-0-LNKS	1		SCHEMATICS		A	A	A	A	A	A	A				
61	K-CS-M7793-0-LNKT	1		SCHEMATICS		A	A	A	A	B	B	B				
62	K-CS-M7793-0-TTN	1		SCHEMATICS		A	A	A	A	A	A	A				

NOTES:

DD REV	A	B	C	D	E	F	H				

REVISION HISTORY			CONT. REVISION HISTORY		
ENG	ECO NUMBER	REV	ENG	ECO NUMBER	REV

MADE BY:
DATE:

CHECKED BY:
DATE:

DESIGN ENGINEER:
DATE:

RESPONSIBLE ENG:
DATE:

PRODUCTION ENG:
DATE:

d i g i t a l

TITLE DRAWING DIRECTORY

DEUNA LINK MODULE

SIZE	CODE	DOCUMENT NUMBER	REV.
K	DD	M7793-0	H

SHEET 3 OF 3 MKO

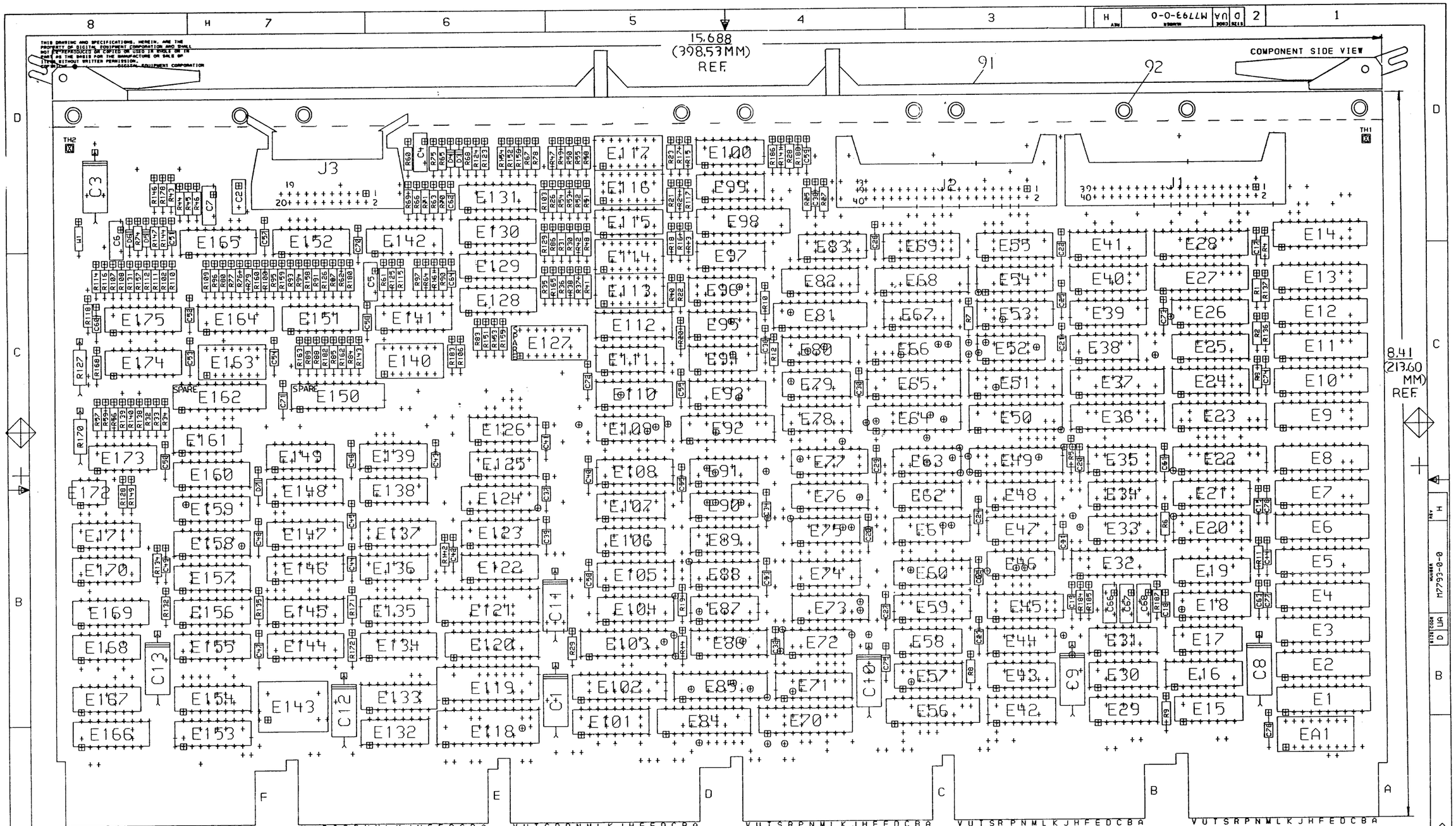

CHK	DRAWN BY	ENGINEER	CHANGE NO	DATE	REV
AND	B. Fraser	Peter Reeke	M7793-MK6	11DEC84	H

CHK	DRAWN BY	ENGINEER	CHANGE NO	DATE	REV

NOTES:
1. SPARE I.C. LOCATIONS: E127, E152, E162

STEP E	↑ Y AXIS ___ STEP ___ TIMES
REPEAT	→ X AXIS ___ STEP ___ TIMES

ETCH REV. DIP1

SIGNATURES	DATE
DRN. B.H. FRASER	11-DEC-84
CHK'D	7-FEB-91
MECH. ENG	6-Feb-85
PROJ. ENG	6-Feb-85
PROD. Rob Kennedy	10-APR-85

digital

TITLE DELNA LINK MODULE

SCALE 2/1	SIZE	CODE	NUMBER	REV
SHT. 1 OF 1	D	UA	M7793-0-0	H
NEXT HIGHER ASSY. K-DD-M7793-0				

MKO 1 MS# 302285

LAYER 1

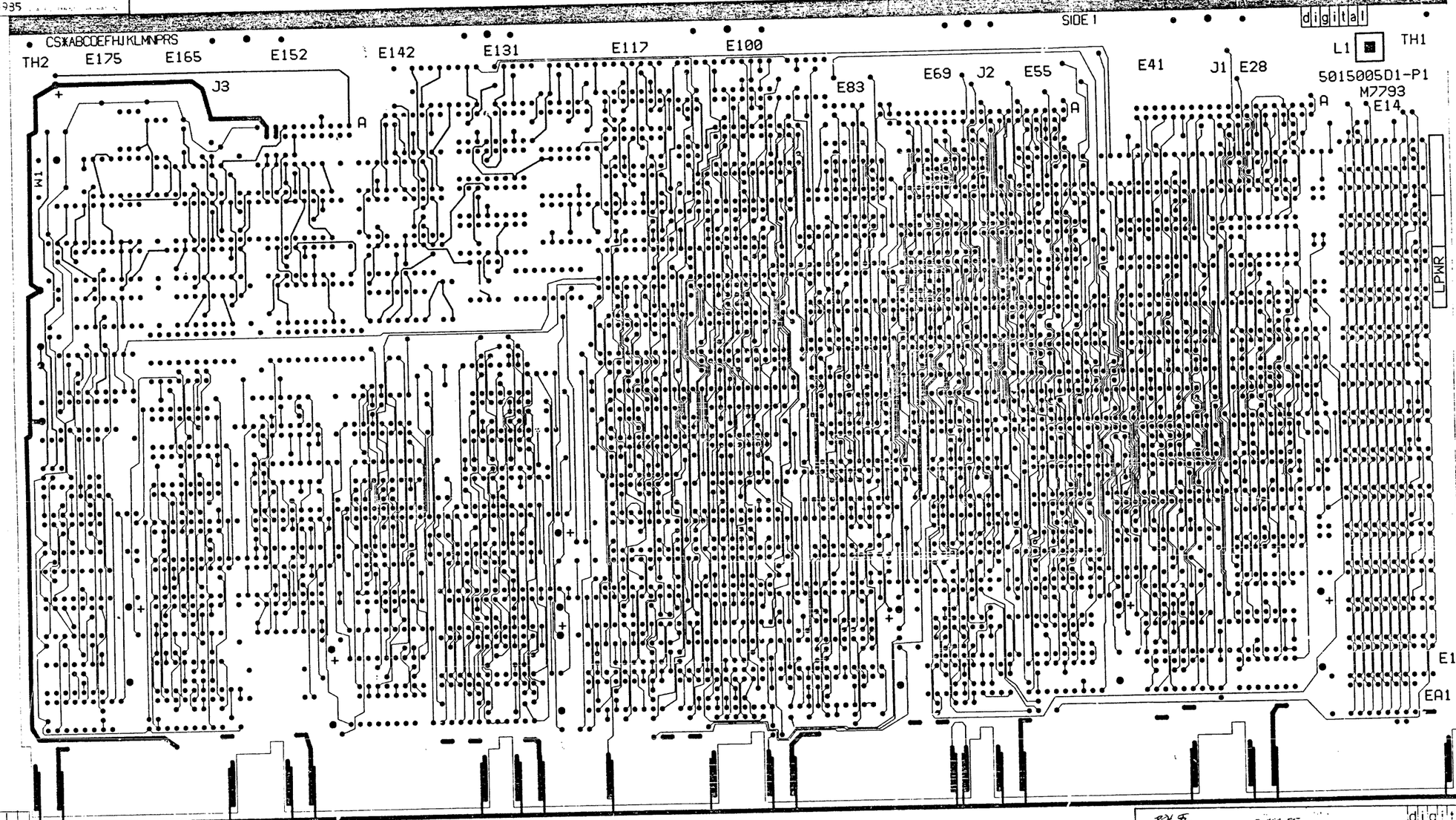

ETCH CUT DRAWING

DEC 5015005-0-0 F

D-UA-M7793-0.0

MKO

TITLE ETCH CUT DRAWING			
SIZE D	CODE EC	5015005-0-0	REV F
SCALE 2/1	SHEET 2 OF 2		
MKO			

AUTOMATED BY PRTLST.4Q(50)

P A R T S L I S T

LINE	ITEM	TOP DOCUMENT	PART NUMBER	MIN REV	DESCRIPTION	QTY PER VARIATION 00 / E1	REFERENCE DESIGNATOR
					VARIATION REVISION LEVEL:		
1	1	D-MD-5015005-0-0	5015005-00	D	DRILL AND ETCH CUT	1	
2	2		1010978-36		.1 MFD 50V 10% CER	1	C2
3	3		1002424-00		1200.0 MMF 100V 5%200PPM MICA	2	C4,C6
4	4		1000019-00		150.0 MMF 100V 5%200PPM MICA	2	C5,C7
5	5		1012784-00		.047 MFD 50V +80-20% CER	39	C14,C15,C17,C18,C19,C20,C21,C22,
							CONT C23,C24,C25,C26,C27,C28,C29,C30,
							CONT C31,C32,C33,C34,C35,C36,C37,C38,
							CONT C39,C40,C41,C42,C43,C44,C45,C46,
							CONT C47,C48,C49,C50,C51,C52,C53
6	6		1001010-00		.01 MFD 50V +80-20% Z5U CER	21	C54,C55,C56,C57,C58,C59,C60,C61,
							CONT C62,C63,C64,C65,C70-C78
7	7		1005820-00		22.0 MMF 100V 5%200PPM MICA	2	C66,C67
8	8		1000010-00		39.0 MMF 100V 5%200PPM MICA	1	C68
9	9		1100114-00		PIV= 25 IO=135 MA	5	D3,D4,D5,D6,D7
10	10		2118054-03		16K MOS RAM 55NS 2	16	E1,E2,E3,E4,E5,E6,E7,E8,E9,E10,
							CONT E11,E12,E13,E14,E27,E28
11	11		1913340-00		74S32 OR GATE-QUAD 2IN	1	E15
12	12		1912851-00		LS169 COUNTER,SYNCH. UP/DO	9	E16,E18,E19,E20,E59,E60,E76,
							CONT E134,E169
13	13		1912811-00		LS21 AND GATE-DUAL 4IN,PO	1	E17
14	14		1912849-00		LS161 COUNTER,SYNCHR,4BIT	9	E21,E24,E25,E26,E39,E40,E55,
							CONT E156,E158
15	15	BLANK	23K4 -01	***	THIS ITEM IS NOT USED ***	-	
16	16		1912805-00		LS08 AND GATE-QUAD 2IN,PO	4	E29,E38,E95,E167
17	17		1912820-00		LS51 A-O-I GATE 2-WIDE 2I	2	E30,E44
18	18		1912803-00		LS04 INVERTER GATE,HEX	5	E31,E35,E78,E79,E149
19	19	BLANK	23K5 -01	***	THIS ITEM IS NOT USED ***	-	
20	20		1912799-00		LS00 NAND-GATE-QUAD 2IN,P	3	E33,E52,E80
21	21		1912824-00		LS74 FF-D DUAL,EDGE TRIGG	4	E34,E42,E94,E161
22	22		1910550-00		74S174 FF-D HEX	5	E41,E61,E101,E133,E159

REVISION HISTORY			BASIC PART NO: M7793			
ENG	ECO NUMBER	REV	SECTION A OF A	DRN: R LOVE	DATE: 09-14-82	D I G I T A L
---	INITIAL	A	SECTION.VARIATION INDEX	CHK'D: C COSTA	DATE: 09-14-82	TITLE PARTS LIST DEUNA LINK MODULE
TE	M7793-TW003	B	[A] 00			
NB	M7793-TW004	C	[B]			
BRC	M7793-MK005	D	[C]	DES.ENG: M STECKLAIR	DATE: 09-14-82	DOCUMENT NUMBER
ML	M7793-MK006	E	[D]			SIZE K / CODE PL / NUMBER M7793-0-0 / REV E
			[E]			
			[F]	RESP.ENG.: M.LAWRENCE M. Lawrence 16 APR 85	DATE: 11-APR-85	
			[H]			
			[J]			
			[K]	MFG.ENG.: W.BROOKE	DATE: 11-APR-85	RELEASE DATE: 11-APR-85
			[L]			
			[M]	ASSEMBLY NUMBER: D-UA-M7793-0-0	TOP DOCUMENT NUMBER: *K-DD-M7793-0	FILE NAME: MK1194.PLS / EDIT # 18
			[N]			

LINE	ITEM	TOP DOCUMENT	PART NUMBER	MIN REV	DESCRIPTION	QTY PER VARIATION 00	REFERENCE DESIGNATOR
					VARIATION REVISION LEVEL:	E1	
23	23		1912810-00		LS20 NAND GATE-DUAL 4IN	1	E43
24	24		1911911-00	DEC	74S124 OSCILLATOR,DUAL VOLT	1	E45
25	25		1910534-00		74S04 INVERTER GATE-HEX 1I	5	E46,E75,E87,E99,E115
26	26		1910537-00		74S11 AND GATE-TRIPLE 3INP	2	E47,E106
27	27		1912807-00		LS10 NAND GATE-TRIPLE 3IN	1	E48
28	28		1912847-00		LS157 MUX 1 OF 2(QUAD)	2	E53,E82
29	29		1915758-00		LS166 SHIFT REG, 8BIT PARA	2	E54,E69
30	30		1914085-00		74S260 NOR GATE-DUAL,POS	2	E57,E72
31	31		1910539-00		74S20 NAND GATE-DUAL 4INPU	2	E58,E88
32	32		1910536-00		74S10 NAND GATE-TRIPLE 3IN	2	E62,E109
33	33		1912850-00		LS164 SHIFT REG, 8BIT SERI	2	E63,E67
34	34		1914214-00		LS374 FF-D OCTAL EDGE TRIG	5	E64,E65,E66,E68,E98
35	35		1911983-00		74S133 NAND GATE-POSITIVE 1	3	E71,E104,EA1
36	36		1910957-00		74S175 FF-D QUAD COMMON CLO	1	E73
37	37		1910532-00		74S00 NAND GATE-QUAD 2IN	3	E74,E111,E135
38	38		1912646-00		LS253 MUX 1 OF 4 (DUAL)	8	E77,E124,E144,E145,E147,E148,
						CONT	E154,E155
39	39		1913671-00		74S374 FF-D,OCTAL,TRI STATE	2	E81,E120
40	40		1912746-00	DEC	74S37 NAND GATE-QUAD 2IN	1	E83
41	41		1910548-00		74S157 MUX 1 OF 2 (QUAD)	2	E86,E112
42	42		1911712-00		74S51 AND-OR GATE-INVERT D	1	E89
43	43		1912801-00		LS02 NOR-GATE-QUAD 2IN	2	E90,E139
44	44		1912389-00		74S08 AND GATE-QUAD 2IN,PO	1	E91
45	45		1912697-00		LS174 FF-D HEX W/CLEAR	4	E93,E108,E110,E123
46	46		1912816-00		LS32 OR GATE-QUAD 2IN,POS	2	E96,E138
47	47		1300005-01		R NETWORK 13-1K 5.0 % 14PIN	1	E97
48	48		1915019-00		74S38 NAND BUFFER-QUAD 2IN	1	E100
49	49		1914082-00		74S163 COUNTER,SYNCH UP/DOW	7	E105,E122,E137,E146,E153,E157,
						CONT	E166
50	50		1910544-00		74S74 FF-D DUAL,EDGE TRIGG	5	E107,E136,E168,E170,E171
51	51		1514962-00		TPQ2907 PNP 500MW SI 40 100	4	E113,E114,E116,E117
52	52		1915697-00		RAM 256X4 TRI-STATE	3	E118,E119,E121
53	53		1912813-00		LS27 NOR GATE-TRIPLE 3IN	1	E125
54	54		1912808-00		LS11 AND GATE-TRIPLE 3IN	1	E126
55	55		1918353-00		10231 FF-D MASTER-SLAVE	5	E128,E130,E151,E174,E175
56	56		1911402-00		10105 OR/NOR GATE,2-3-2	4	E129,E131,E141,E152
57	57		1912096-00	DEC	74S86 XOR GATE,QUAD 2IN	1	E132
58	58		1611601-00		DELAY= 50NS,TAPPED LINE	1	E140
59	59		1913220-00		10216 RECEIVER,TRIPLE LINE	2	E142,E165
60	60		1811660-00		OSCILLATOR, XTAL 20.000 MHZ	1	E143
61	61		1911579-00		8641 TRANSCEIVER,BUS,QUA	1	E160
62	62		1619248-00		DELAY= 25/74NS ECL MULTI-LOGIC	1	E163
63	63		1911404-00		10107 XOR/NOR GATE,3-2IN	1	E164
64	64		1913009-00		4N36 OPTO COUPLED ISLTR	1	E172
65	65		1912388-00		74S02 NOR GATE-QUAD 2IN,PO	1	E173
66	66		1209941-02		PCB,HEADER 40PIN(2X20).100CC 90D	2	J1,J2
67	67		1209941-13		PCB,HEADER 19PIN(2X10).100CC 90D	1	J3
68	68		1301322-00		180.0 .25 W 5.0 % CF	27	R1,R32,R56,R78,R85,R86,R87,R89,

	TITLE		SIZE	CODE	DOCUMENT NUMBER	REV
D I G I T A L	DEUNA LINK MODULE	SECTION A OF A	K	PL	M7793-0-0	E

LINE	ITEM	TOP DOCUMENT	PART NUMBER	MIN REV	DESCRIPTION	VARIATION	REVISION LEVEL:	QTY PER VARIATION 00 E1	REFERENCE DESIGNATOR
									CONT R90,R91,R95,R100,R108,R111,R112,
									CONT R114,R115,R118,R124,R137,R138,
									CONT R146,R151,R152,R183,R171,R188
69	69		1300247-00		120.0 .25 W 5.0 %		CF	19	R2,R67,R102,R116,R125,R126,R129,
									CONT R136,R157,R158,R159,R160,R161,
									CONT R162,R163,R168,R178,R172,R4
70	70		1300229-00		100.0 .25 W 5.0 %		CF	8	R3,R5,R6,R8,R14,R19,R20,R128
71	71		1300365-00		1.0 K .25 W 5.0 %		CF	11	R7,R9,R11,R12,R132,R134,R135,
									CONT R141,R142,R186,R187
72	72		1302388-00		2.0 K .25 W 5.0 %		CF	6	R10,R43,R45,R61,R63,R185
73	73		1302957-00		121.0 .25 W 1.0 %		RN55D-F10	10	R13,R16,R21,R22,R27,R28,R37,R40,
									CONT R41,R52
74	74		1302872-00		681.0 .25 W 1.0 %		RN55D-F1	3	R15,R23,R24
75	75		1303036-00		56.20 .25 W 1.0 %		RN55D-F10	3	R17,R48,R51
76	76		1301972-00		270.0 .25 W 5.0 %		CF	17	R18,R26,R30,R33,R36,R38,R47,R49,
									CONT R50,R54,R57,R58,R107,R123,R140,
									CONT R153,R154
77	77		1301421-00		15.0 .25 W 5.0 %		CF	3	R25,R31,R42
78	78		1300479-00		10.0 K .25 W 5.0 %		CF	1	R29
79	79		1301775-00		820.0 .25 W 5.0 %		CF	7	R34,R59,R117,R131,R139,R155,R156
80	80		1300316-00		470.0 .25 W 5.0 %		CF	16	R35,R64,R65,R83,R84,R88,R96,R97,
									CONT R103,R109,R110,R143,R147,R165,
									CONT R180,R182
81	81		1313150-00		430.0 .25 W 5.0 %		CF	10	R44,R46,R60,R62,R66,R70,R77,R80,
									CONT R93,R94
82	82		1305121-00		38.30 .25 W 1.0 %		RN55D-F10	6	R53,R55,R69,R71,R76,R79
83	83	BLANK			*** THIS ITEM IS NOT USED ***			-	
84	84		1303179-00		8.20 K .25 W 5.0 %		CF	1	R74
85	85		1300271-00		220.0 .25 W 5.0 %		CF	1	R106
86	86		1300356-00		820.0 .50 W10.0 %		CF	2	R127,R170
87	87		1300309-00		390.0 .25 W 5.0 %		CF	1	R149
88	88		1300432-00		3.0 K .25 W 5.0 %		CF	1	R184
89	89		9009185-00		JUMPER, WIRE, INSULATED, BLACK B			1	W1
90	90		1012084-01		8 MFD 25V +75-10%		AL EL	8	C1,C3,C8,C9,C10,C11,C12,C13
91	91		1216988-02		HANDLE,MODULE,HEX TWO EJECTORS			1	
92	92		9009000-00		EYELET,ROLLED 0.1210DX0.156			12	
93	93		1302391-00		20.0 K .25 W 5.0 %		CF	1	R144
94	94		1304837-00		24.0 K .25 W 5.0 %		CF	1	R68
95	95		1300488-00		12.0 K .25 W 5.0 %		CF	1	R75
96	96	BLANK	9105740-55		*** THIS ITEM IS NOT USED ***			-	
97	97		23034K4-00		K4-01			1	E50
98	98		23035K4-00		K4-01			1	E22
99	99		23036K4-00		K4-01			1	E23
100	100		23037K4-00		K4-01			2	E102,E103
101	101		23025K5-00		K5-01			1	E49
102	102		23026K5-00		K5-01			1	E51
103	103		23027K5-00		K5-01			1	E36
104	104		23028K5-00		K5-01			1	E37

P A R T S L I S T

LINE	ITEM	TOP DOCUMENT	PART NUMBER	MIN REV	DESCRIPTION	QTY PER VARIATION 00	QTY PER VARIATION E1	REFERENCE DESIGNATOR
					VARIATION REVISION LEVEL:			
105	105		23029K5-00	K5-01		1		E32
106	106		23030K5-00	K5-01		2		E56,E70
107	107		23031K5-00	K5-01		1		E92
108	108		23033K5-00	K5-01		2		E84,E85

D I G I T A L	TITLE DEUNA LINK MODULE	SECTION A OF A	SIZE K	CODE PL	DOCUMENT NUMBER M7793-0-0	REV E

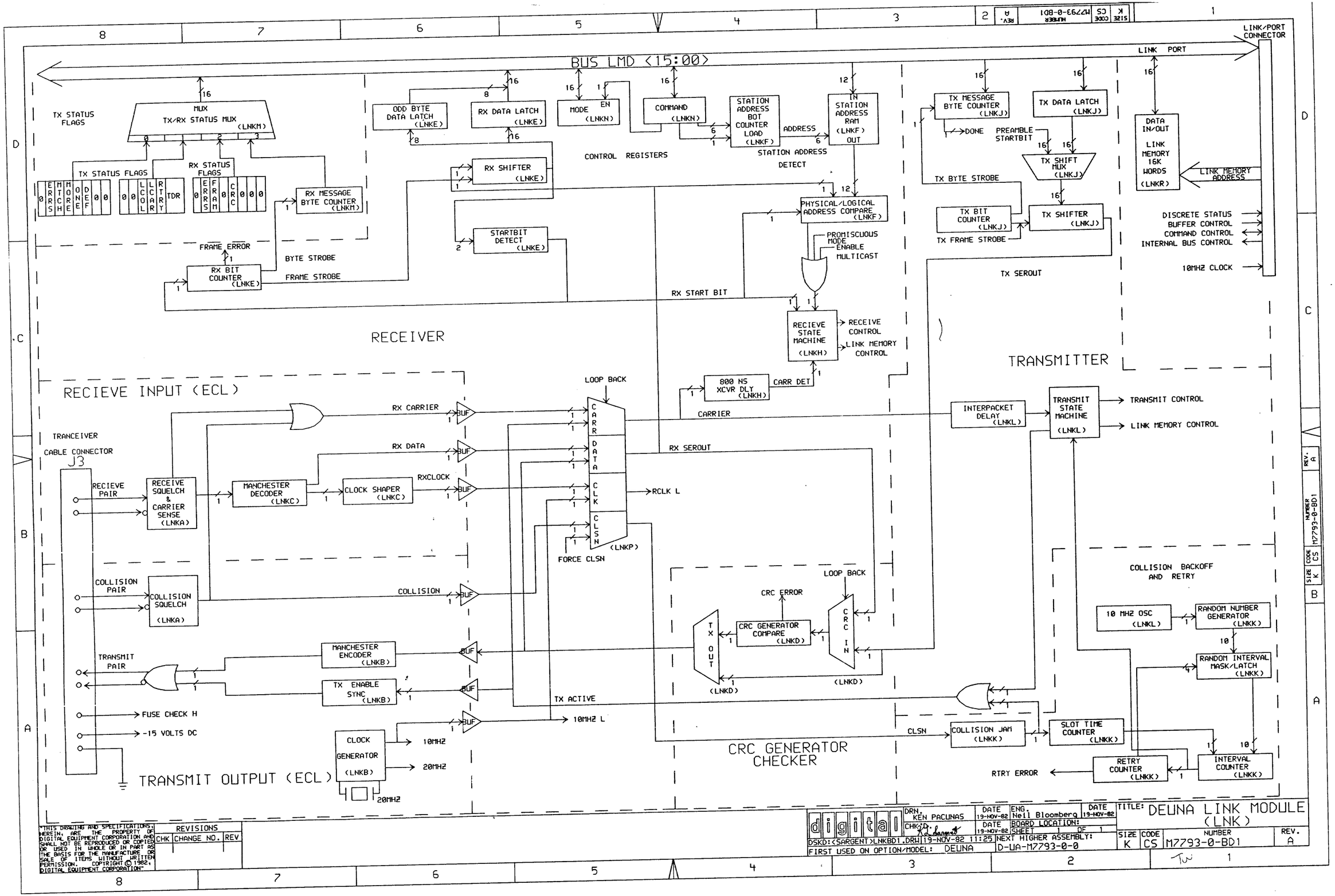

REVISIONS		
CHK	CHANGE NO.	REV

DSKD:<SARGENT>LNKBD1.DRW 19-NOV-82 11:25

FIRST USED ON OPTION/MODEL: DELNA

DRN. KEN PACUNAS	DATE 19-NOV-82	ENG. Neil Bloomberg	DATE 19-NOV-82
CHK.	DATE 19-NOV-82	BOARD LOCATION:	
		SHEET 1 OF 1	
		NEXT HIGHER ASSEMBLY: D-UA-M7793-0-0	

TITLE: DELNA LINK MODULE (LNK)

SIZE	CODE	NUMBER	REV.
K	CS	M7793-0-BD1	A

COMMAND REGISTER (WRITE ONLY)

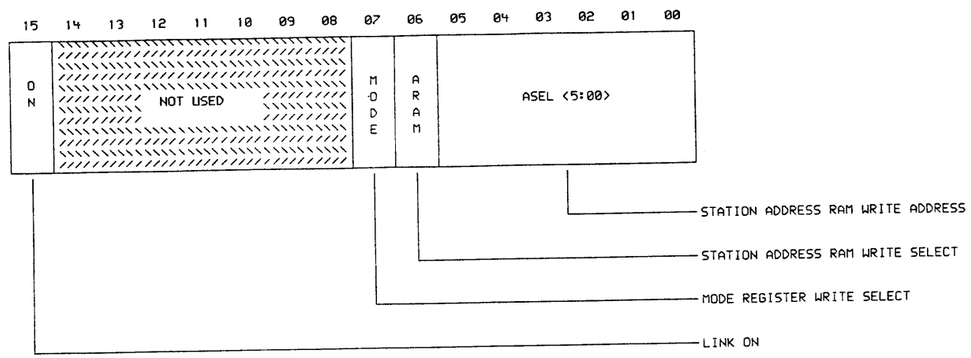

MODE REGISTER (WRITE ONLY)

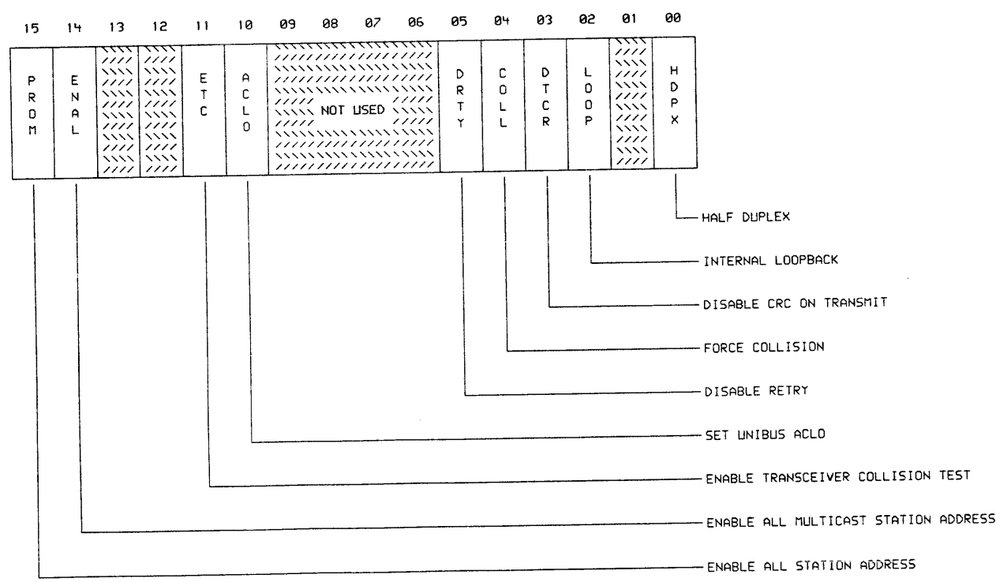

LINK CONTROL REGISTERS
COMMAND AND MODE

REVISIONS		
CHK	CHANGE NO.	REV

digital

DRN. "PAUL HEBERT" DATE 19-NOV-82
CHK. DATE 19-NOV-82
ENG. Neil Bloomberg DATE 19-NOV-82
BOARD LOCATION:
SHEET 1 OF 1
DSKD:<SARGENT>LNKIR1.DRW 19-NOV-82 11:22
NEXT HIGHER ASSEMBLY: D-UA-M7793-0-0
FIRST USED ON OPTION/MODEL: DEUNA

TITLE: DEUNA LINK MODULE (LNK)

SIZE	CODE	NUMBER	REV.
K	CS	M7793-0-IR1	A

TRANSMIT STATUS WORD 0 (LINK MEMORY BUFFER)

15	14	13	12	11	10	09	08	07	06	05	04	03	02	01	00
0	ERRS	MTCH	MORE	ONE	DEF	0	0	0	0	0	0	0	0	0	0

- DEF — TRANSMISSION DEFERRED
- ONE — ONE COLLISION
- MORE — MORE THAN ONE COLLISION
- MTCH — STATION ADDRESS MATCH ON TRANSMISSION
- ERRS — ERROR SUMARY

RECEIVE STATUS WORD 0 (LINK MEMORY BUFFER)

15	14	13	12	11	10	09	08	07	06	05	04	03	02	01	00
0	ERRS	FRAM	0	CRC	0	0	0	0	0	0	0	0	0	0	0

- CRC — CRC ERROR
- FRAM — FRAMING ERROR
- ERRS — ERROR SUMARY

TRANSMIT STATUS WORD 1 (LINK MEMORY BUFFER)

15	14	13	12	11	10	09	08	07	06	05	04	03	02	01	00
0	0	0	LCOL	LCAR	RTRY	TDR									

- TDR — CABLE FAULT DISTANCE COUNT
- RTRY — TRANSMISSION ABORTED-16 ATTEMPTS
- LCAR — LOSS OF CARRIER
- LCOL — TRANSMISSION ABORTED-LATE COLLISION

RECEIVE STATUS WORD 1 (LINK MEMORY BUFFER)

15	14	13	12	11	10	09	08	07	06	05	04	03	02	01	00
0	0	0	0	MLEN <11:00>											

- MLEN <11:00> — MESSAGE LENGTH

LINK STATUS REGISTER FORMAT

(WORDS 0 AND 1 OF LINK MEMORY BUFFER)

REVISIONS		
CHK	CHANGE NO.	REV

DRN. PAUL HEBERT"	DATE 19-NOV-82	ENG. Neil Bloomberg	DATE 19-NOV-82	TITLE: DELNA LINK MODULE (LNK)
CHK:	DATE 19-NOV-82	BOARD LOCATION: SHEET 1 OF 1		
DSKD:<SARGENT>LNKIR2.DRW 19-NOV-82 11:23		NEXT HIGHER ASSEMBLY: D-UA-M7793-0-0		SIZE K / CODE CS / NUMBER M7793-0-IR2 / REV. A
FIRST USED ON OPTION/MODEL: DELNA				

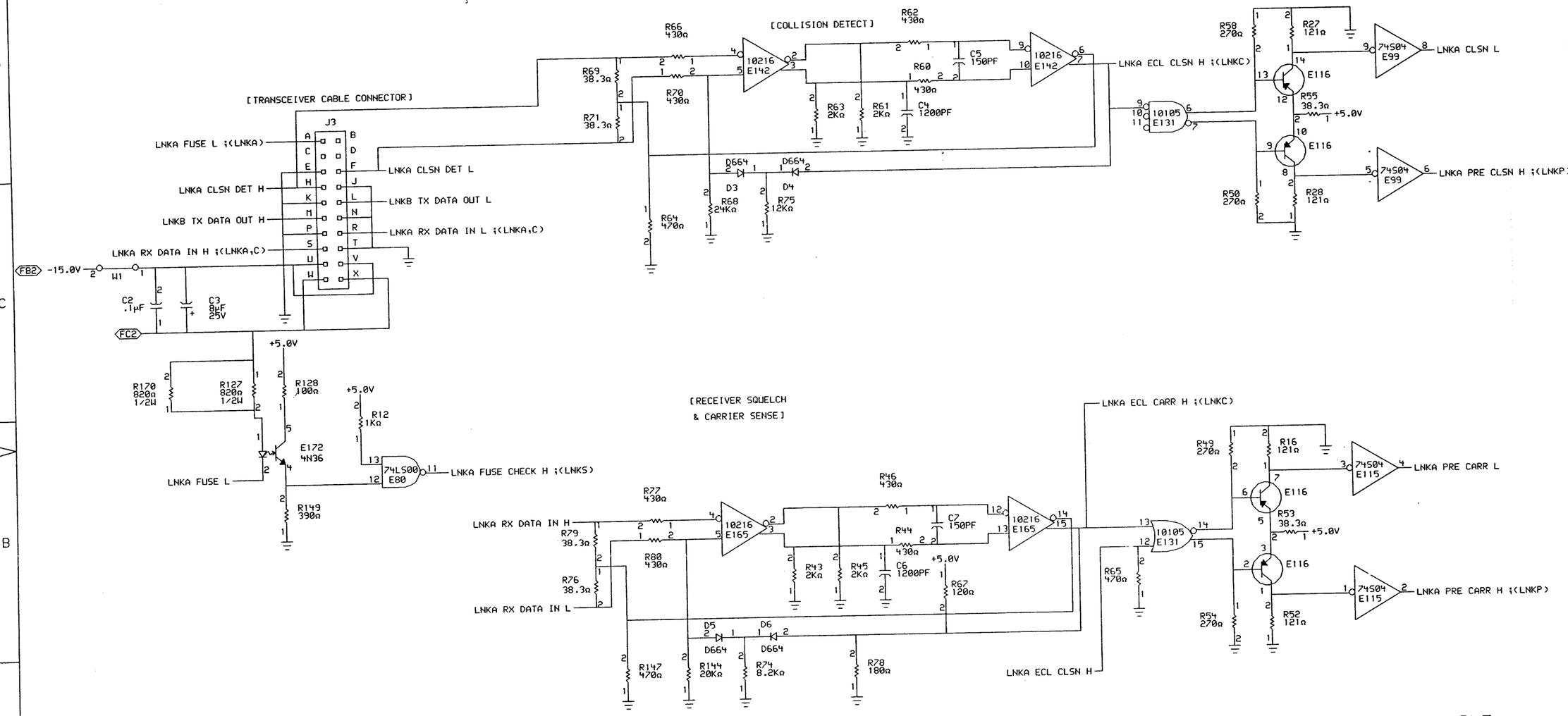

TRANSCEIVER CABLE
COLLISION DETECT
CARRIER SENSE

REVISIONS		
CHK	CHANGE NO.	REV

DRN: K. Sargent — DATE 09-MAY-83 — ENG. Neil Bloomberg — DATE 09-MAY-83
CHK: D. Tom Walsh — DATE 09-MAY-83 — BOARD LOCATION: — SHEET 1 OF 1
DSKE: <SARGENT>LNKAD.DRW 09-MAY-83 06:11 — NEXT HIGHER ASSEMBLY: D-UA-M7793-0-0
FIRST USED ON OPTION/MODEL: DELNA

TITLE: DELNA LINK MODULE (LNKA)

SIZE	CODE	NUMBER	REV.
K	CS	M7793-0-LNKA	D

TW 1

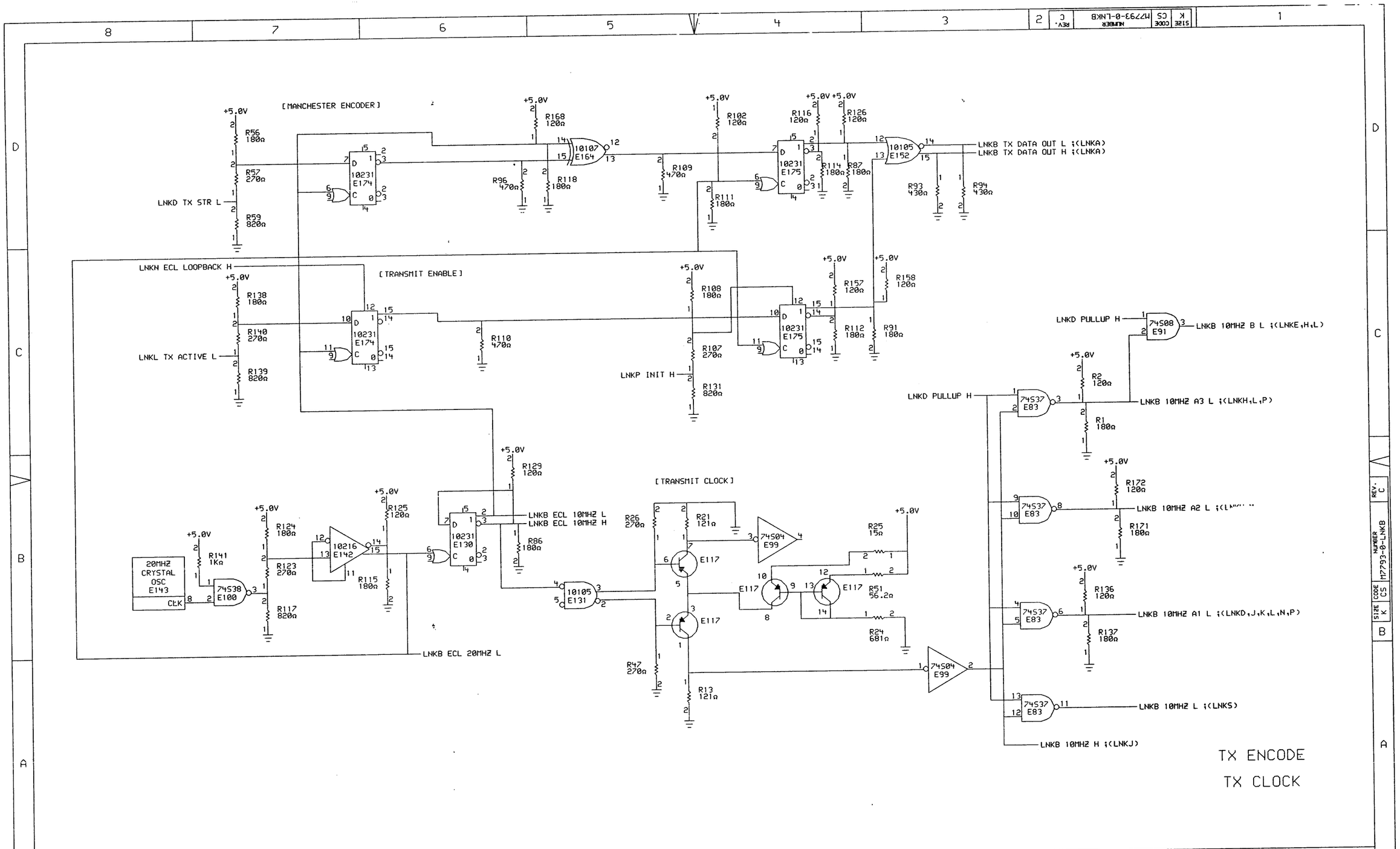

"THIS DRAWING AND SPECIFICATIONS, HEREIN, ARE THE PROPERTY OF DIGITAL EQUIPMENT CORPORATION AND SHALL NOT BE REPRODUCED OR COPIED OR USED IN WHOLE OR IN PART AS THE BASIS FOR THE MANUFACTURE OR SALE OF ITEMS WITHOUT WRITTEN PERMISSION. COPYRIGHT © 1983, DIGITAL EQUIPMENT CORPORATION"

REVISIONS		
CHK	CHANGE NO.	REV

digital

DRN: K. Langevin
CHK'D: Tom Walsh
DSKE: <SARGENT>LNKBC.DRW 19-JAN-83 13:03
FIRST USED ON OPTION/MODEL: DELNA

DATE	ENG.	DATE
09-MAY-83	Neil Bloomberg	09-MAY-83
DATE	BOARD LOCATION:	
09-MAY-83	SHEET 1 OF 1	
	NEXT HIGHER ASSEMBLY:	
	D-UA-M7793-0-0	

TITLE: DELNA LINK MODULE (LNKB)

SIZE	CODE	NUMBER	REV.
K	CS	M7793-0-LNKB	C

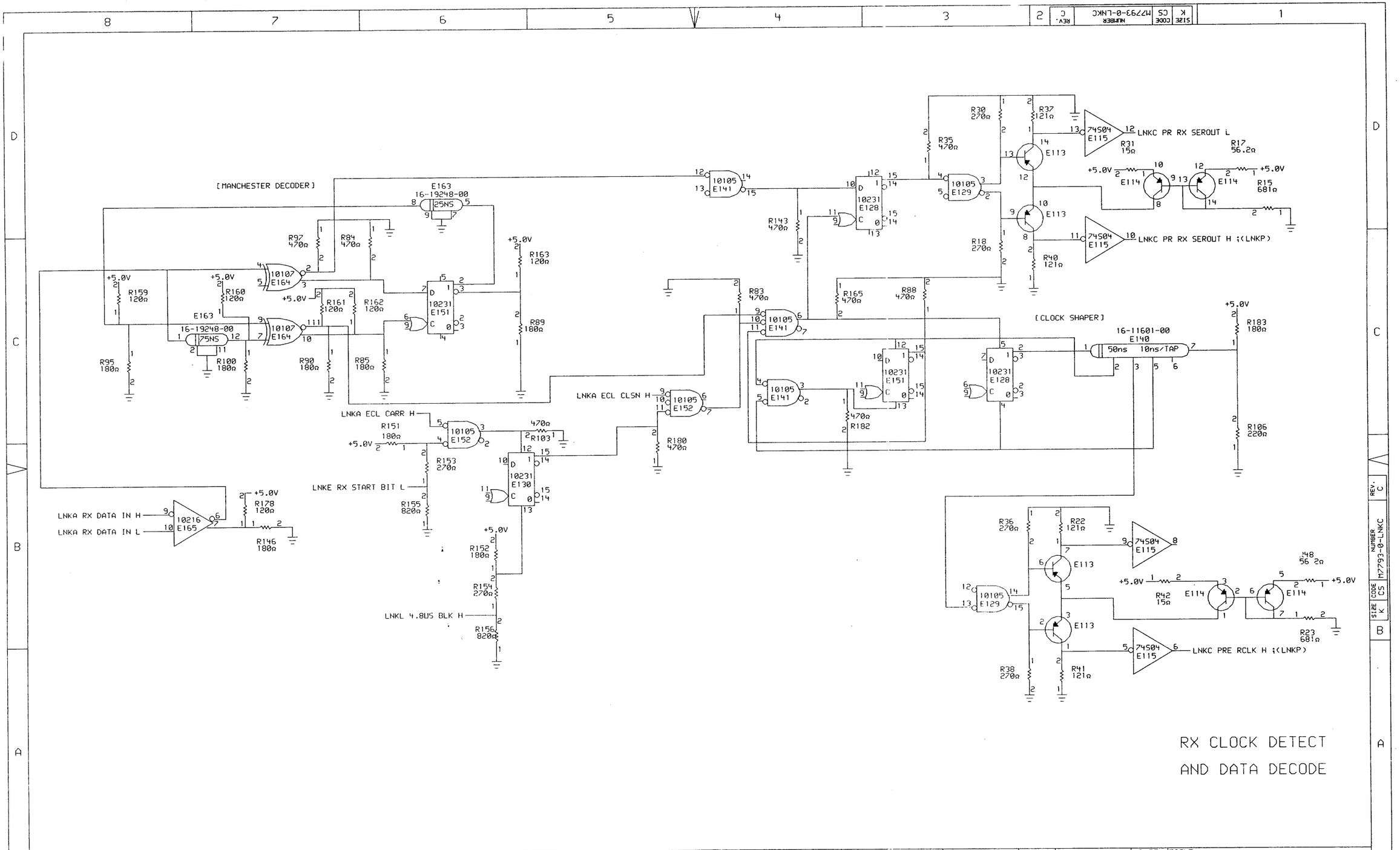

"THIS DRAWING AND SPECIFICATIONS, HEREIN, ARE THE PROPERTY OF DIGITAL EQUIPMENT CORPORATION AND SHALL NOT BE REPRODUCED OR COPIED OR USED IN WHOLE OR IN PART AS THE BASIS FOR THE MANUFACTURE OR SALE OF ITEMS WITHOUT WRITTEN PERMISSION. COPYRIGHT © 1983, DIGITAL EQUIPMENT CORPORATION"

REVISIONS		
CHK	CHANGE NO.	REV

DRN: K. Sargent — DATE 09-MAY-83
CHK: D. Tom Walsh — DATE 09-MAY-83
ENG: Neil Bloomberg — DATE 09-MAY-83
BOARD LOCATION:
SHEET 1 OF 1
DSKE:<SARGENT>LNKCC.DRW 09-MAY-83 06:25
FIRST USED ON OPTION/MODEL: DELUNA
NEXT HIGHER ASSEMBLY: D-UA-M7793-0-0

TITLE: DELUNA LINK MODULE (LNKC)

SIZE	CODE	NUMBER	REV.
K	CS	M7793-0-LNKC	C

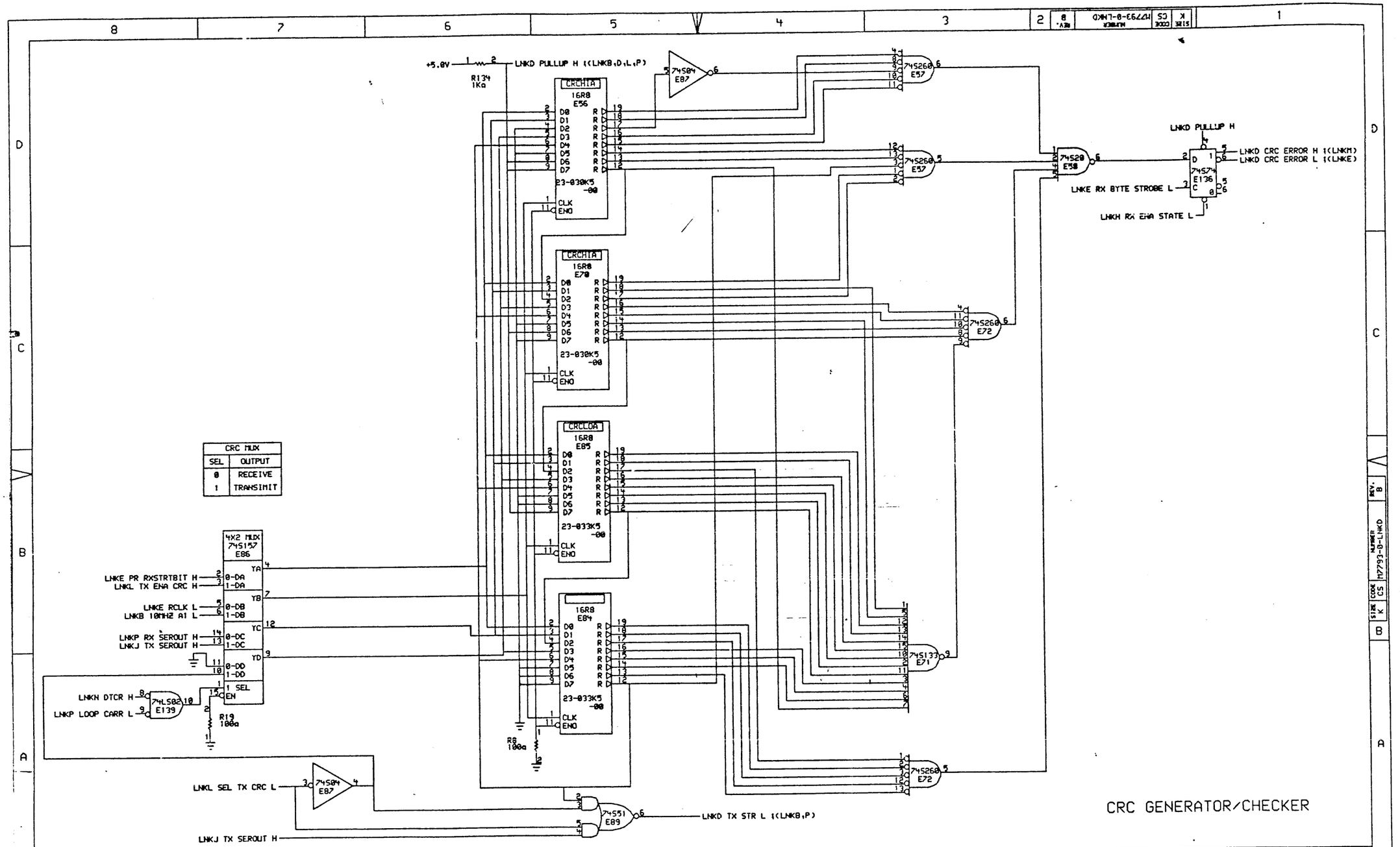

REVISIONS		
CHK	CHANGE NO.	REV
RC	MK005	B

DRN. H. Deluna DATE 19-FEB-85
CHK'D. RC DATE 19-FEB-85
ENG. DATE 19-FEB-85
BOARD LOCATION: SHEET 1 OF 1
XTRA: (DENSMORE)LNKDA.DRW;19-FEB-85 03:21 NEXT HIGHER ASSEMBLY: D-UA-M7793-0-0
FIRST USED ON OPTION/MODEL: DELUNA

TITLE: DELUNA LINK MODULE (LNKD)

SIZE	CODE	NUMBER	REV.
K	CS	M7793-0-LNKD	B

MKO

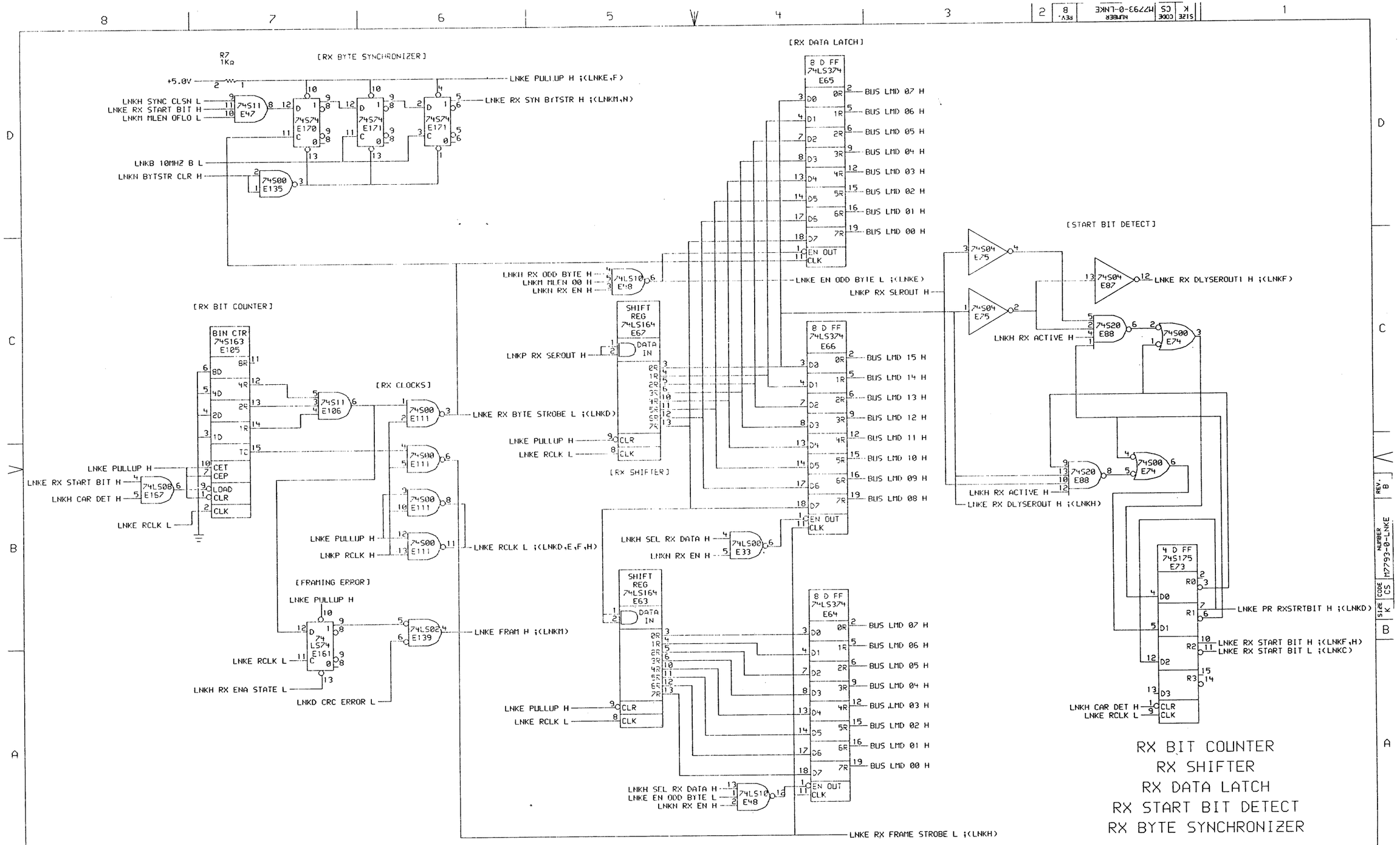

REVISIONS		
CHK	CHANGE NO.	REV

DRN: K. Sargent	DATE 20-JAN-83	ENG. Neil Bloomberg	DATE 20-JAN-83
CHK'D. Tom Walsh	DATE 20-JAN-83	BOARD LOCATION: SHEET 1 OF 1	
DSKD:(SARGENT)LNKE.DRW 20-JAN-83 06:56		NEXT HIGHER ASSEMBLY: D-UA-M7793-0-0	
FIRST USED ON OPTION/MODEL: DELUNA			

TITLE: DELUNA LINK MODULE (LNKE)

SIZE	CODE	NUMBER	REV.
K	CS	M7793-0-LNKE	B

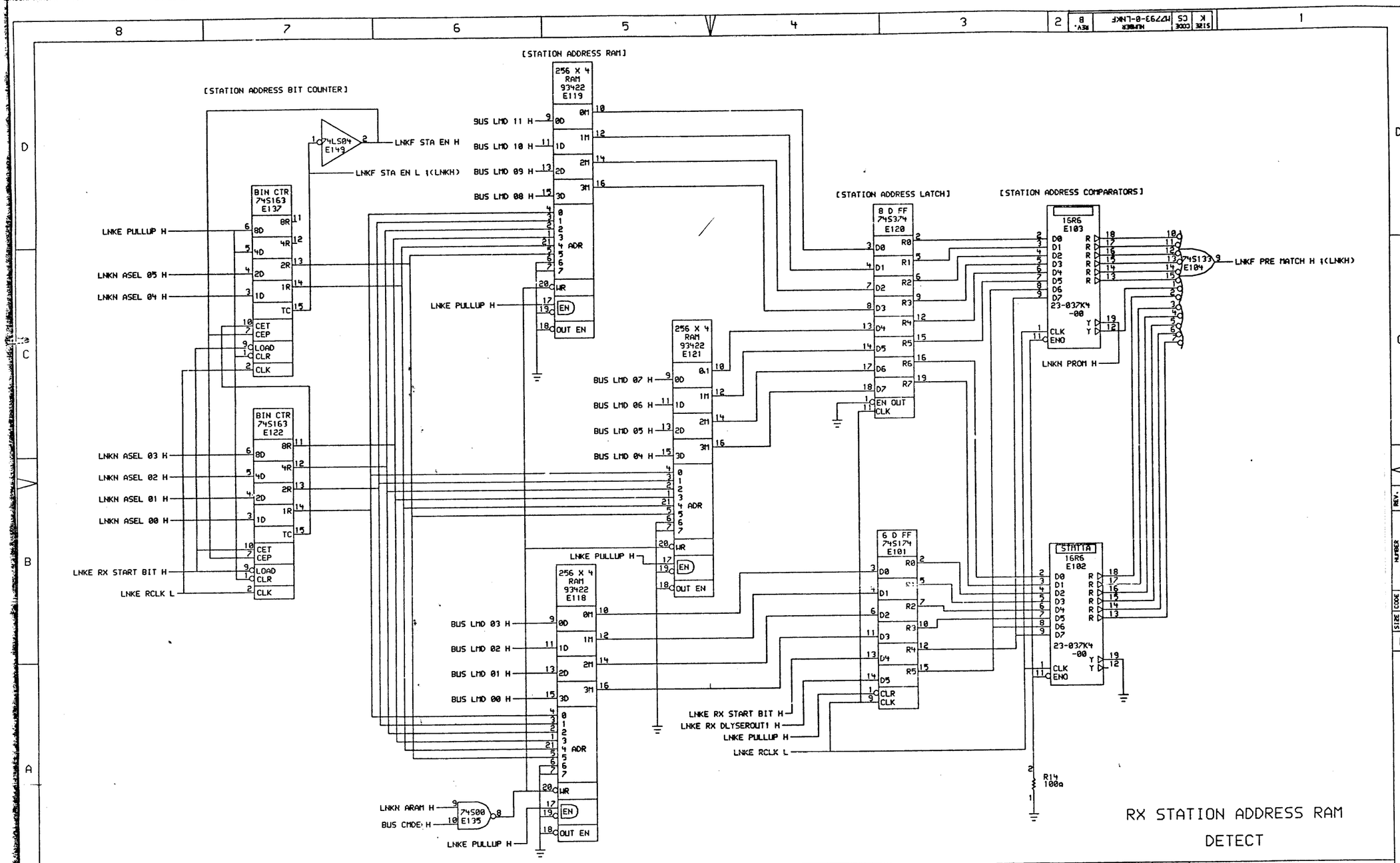

"THIS DRAWING AND SPECIFICATIONS, HEREIN, ARE THE PROPERTY OF DIGITAL EQUIPMENT CORPORATION AND SHALL NOT BE REPRODUCED OR COPIED OR USED IN WHOLE OR IN PART AS THE BASIS FOR THE MANUFACTURE OR SALE OF ITEMS WITHOUT WRITTEN PERMISSION. COPYRIGHT © 1985, DIGITAL EQUIPMENT CORPORATION"

REVISIONS		
CHK	CHANGE NO.	REV
AC	MK005	B

DRN. [illegible] DATE 19-FEB-85
CHK'D. FLC DATE 19-FEB-85
ENG. NEIL BLOOMBERG DATE 19-FEB-85
BOARD LOCATION: SHEET 1 OF 1
XTRA1<DENSMORE>LNKFA.DRW;19-FEB-85 10:03
NEXT HIGHER ASSEMBLY: D-UA-M7793-0-0
FIRST USED ON OPTION/MODEL: DELUNA

TITLE: DELUNA LINK MODULE (LNKF)

SIZE	CODE	NUMBER	REV.
K	CS	M7793-0-LNKF	B

MKO

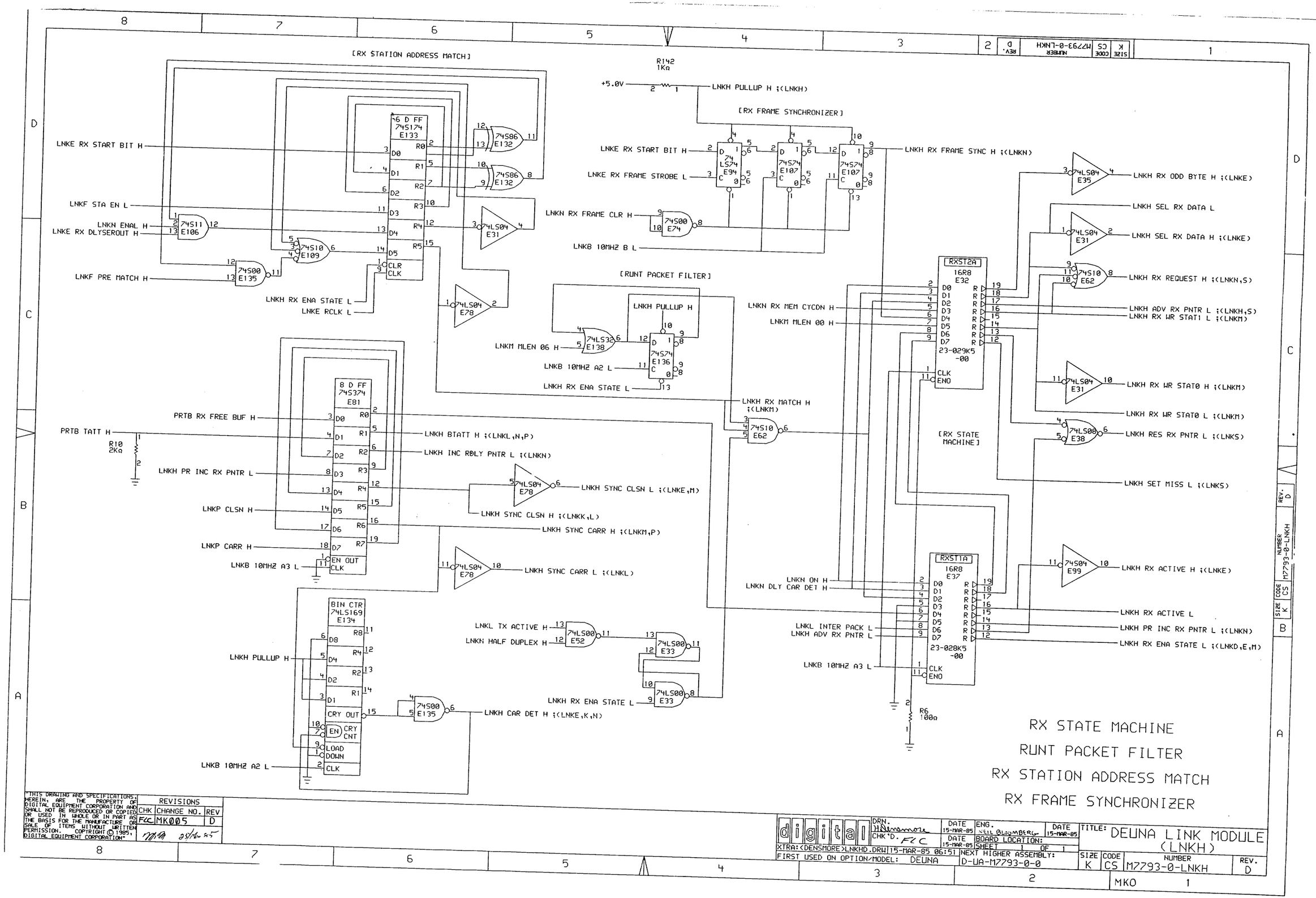

REVISIONS		
CHK	CHANGE NO.	REV
FLC	MK005	D

DRN. HWilmore DATE 15-MAR-85 ENG. NEIL BLOOMBERG DATE 15-MAR-85
CHK'D. FLC DATE 15-MAR-85 BOARD LOCATION: SHEET 1 OF 1
XTRA: <DENSMORE>LNKHD.DRW 15-MAR-85 06:51 NEXT HIGHER ASSEMBLY: D-UA-M7793-0-0
FIRST USED ON OPTION/MODEL: DELUNA

TITLE: DELUNA LINK MODULE (LNKH)

SIZE	CODE	NUMBER	REV.
K	CS	M7793-0-LNKH	D

MKO 1

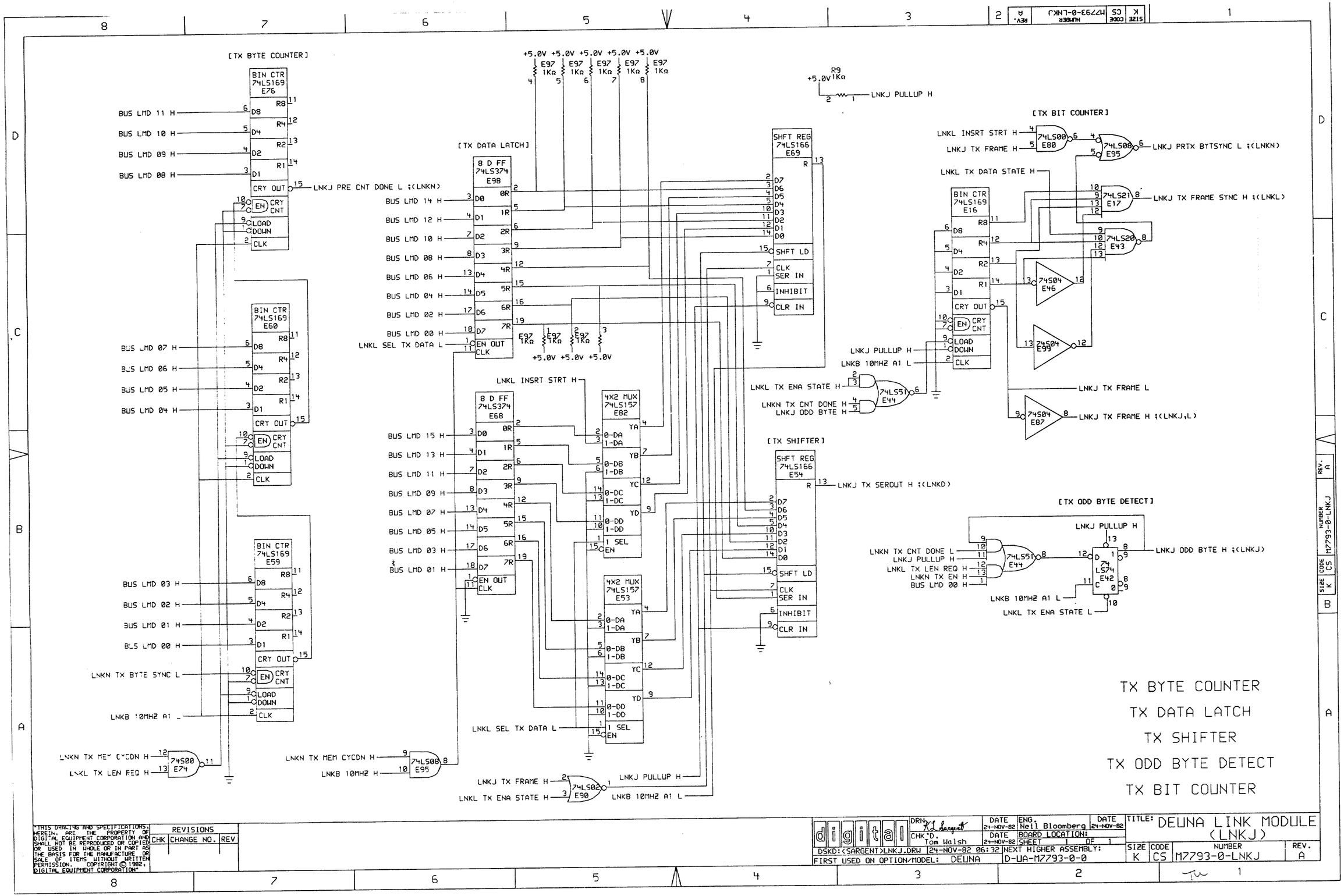

REVISIONS		
CHK	CHANGE NO.	REV

digital

DRN: Neil Bloomberg — DATE 24-NOV-82 — ENG. Neil Bloomberg — DATE 24-NOV-82
CHK: D. Tom Walsh — DATE 24-NOV-82 — BOARD LOCATION: — SHEET 1 OF 1
DSKD:<SARGENT>LNKJ.DRW 24-NOV-82 06:32 — NEXT HIGHER ASSEMBLY: D-UA-M7793-0-0
FIRST USED ON OPTION/MODEL: DELNA

TITLE: DELNA LINK MODULE (LNKJ)

SIZE	CODE	NUMBER	REV.
K	CS	M7793-0-LNKJ	A

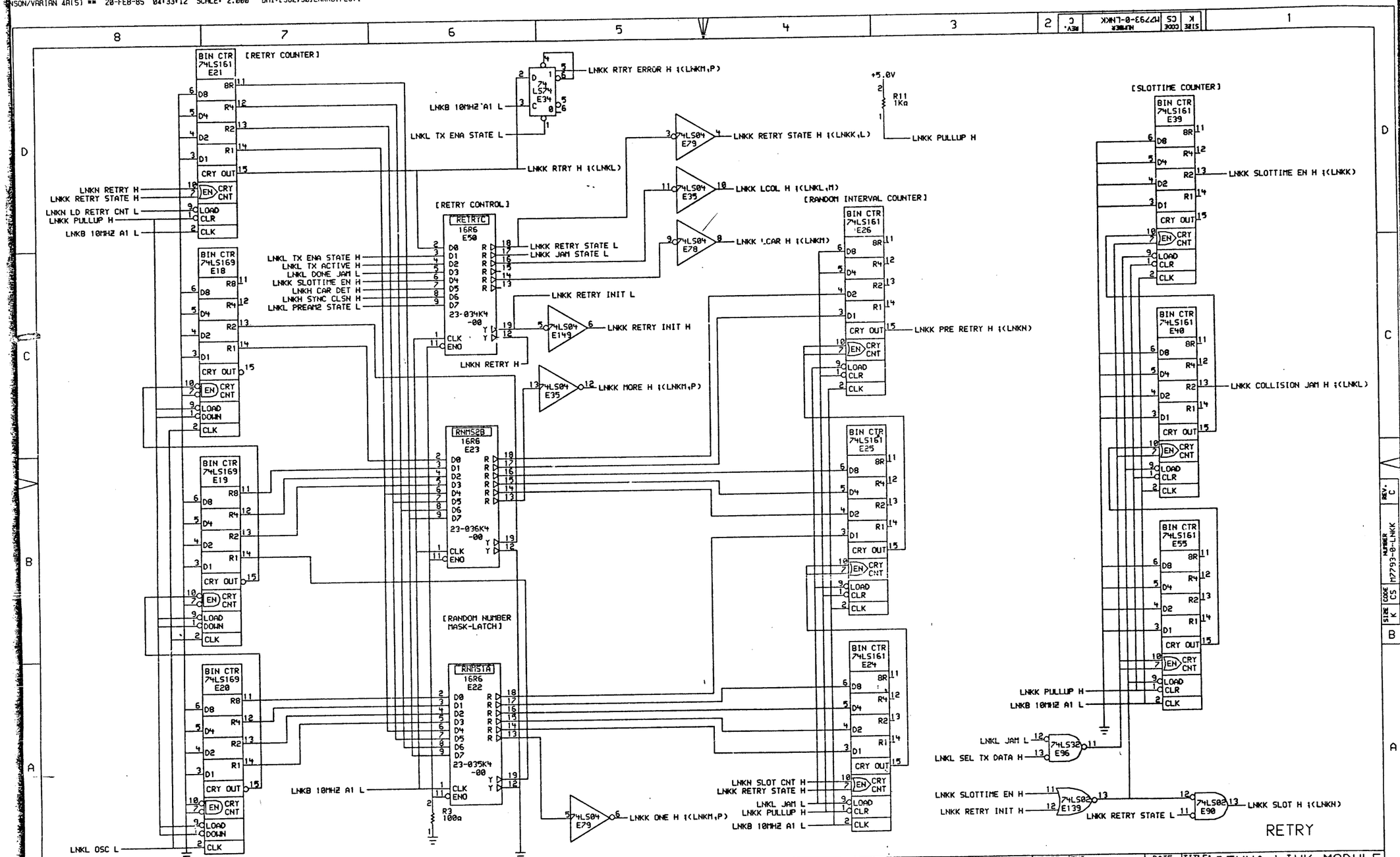

REVISIONS		
CHK	CHANGE NO.	REV
FLC	MK005	C

DRN. DATE 19-FEB-85 ENG. DATE 19-FEB-85
CHK'D. FLC DATE 19-FEB-85 BOARD LOCATION: SHEET 1 OF 1
XTRA:<DENSMORE>LNKKB.DRW;19-FEB-85 10:11 NEXT HIGHER ASSEMBLY:
FIRST USED ON OPTION/MODEL: DELUNA D-UA-M7793-0-0

TITLE: DELUNA LINK MODULE (LNKK)

SIZE	CODE	NUMBER	REV.
K	CS	M7793-0-LNKK	C

MKO

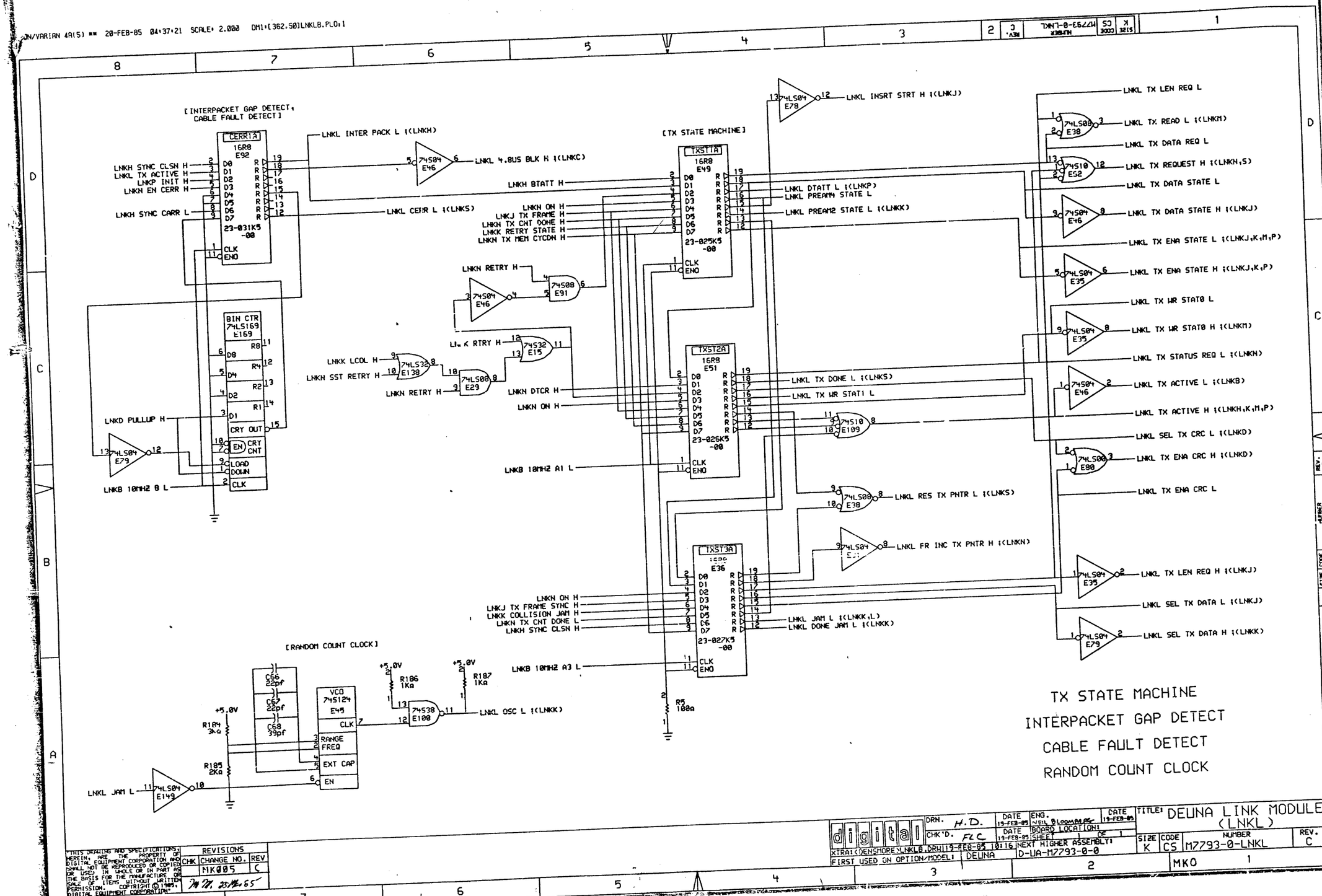
[INTERPACKET GAP DETECT, CABLE FAULT DETECT]
CERR1A
16R8
E92
LNKH SYNC CLSN H
LNKL TX ACTIVE H
LNKP INIT H
LNKN EN CERR H
LNKH SYNC CARR L
LNKL INTER PACK L ;(LNKH)
74LS04 E46
LNKL 4.8US BLK H ;(LNKC)
LNKL CERR L ;(LNKS)
BIN CTR 74LS169 E169
LNKD PULLUP H
74LS04 E79
LNKB 10MHZ B L
[TX STATE MACHINE]
TXST1A
16R8
E49
LNKH BTATT H
LNKN ON H
LNKJ TX FRAME H
LNKN TX CNT DONE H
LNKK RETRY STATE H
LNKN TX MEM CYCDN H
LNKN RETRY H
74S08 E91
LNKK LCOL H
LNKN SST RETRY H
74LS32 E138
74LS08 E29
LNKN DTCR H
TXST2A
16R8
E51
LNKB 10MHZ A1 L
LNKL INSRT STRT H ;(LNKJ)
LNKL DTATT L ;(LNKP)
LNKL PREAM4 STATE L
LNKL PREAM2 STATE L ;(LNKK)
LNKL TX DONE L ;(LNKS)
LNKL TX WR STAT1 L
74S10 E109
LNKL RES TX PNTR L ;(LNKS)
LNKL FR INC TX PNTR H ;(LNKN)
TXST3A
E36
LNKJ TX FRAME SYNC H
LNKK COLLISION JAM H
LNKN TX CNT DONE L
LNKH SYNC CLSN H
LNKB 10MHZ A3 L
LNKL JAM L ;(LNKK,L)
LNKL DONE JAM L ;(LNKK)
R5 100Ω
LNKL TX LEN REQ L
74LS08 E38
LNKL TX READ L ;(LNKM)
LNKL TX DATA REQ L
74S10 E52
LNKL TX REQUEST H ;(LNKN,S)
LNKL TX DATA STATE L
74S04 E46
LNKL TX DATA STATE H ;(LNKJ)
LNKL TX ENA STATE L ;(LNKJ,K,M,P)
74S04 E35
LNKL TX ENA STATE H ;(LNKJ,K,P)
LNKL TX WR STAT0 L
LNKL TX WR STAT0 H ;(LNKM)
LNKL TX STATUS REQ L ;(LNKN)
LNKL TX ACTIVE L ;(LNKB)
LNKL TX ACTIVE H ;(LNKH,K,M,P)
LNKL SEL TX CRC L ;(LNKD)
74LS00 E80
LNKL TX ENA CRC H ;(LNKD)
LNKL TX ENA CRC L
LNKL TX LEN REQ H ;(LNKJ)
LNKL SEL TX DATA L ;(LNKJ)
LNKL SEL TX DATA H ;(LNKK)
[RANDOM COUNT CLOCK]
C66 22pf
C67 22pf
C68 39pf
VCO 74S124 E45
CLK
RANGE FREQ
EXT CAP
EN
+5.0V
R184 3kΩ
R185 2kΩ
R186 1kΩ
R187 1kΩ
74S38 E108
LNKL OSC L ;(LNKK)
74LS04 E149
LNKL JAM L
TX STATE MACHINE
INTERPACKET GAP DETECT
CABLE FAULT DETECT
RANDOM COUNT CLOCK
DRN. H.D.
CHK'D. FLC
DATE 19-FEB-85
ENG. NEIL B LOOMBARDE
BOARD LOCATION:
SHEET 1 OF 1
NEXT HIGHER ASSEMBLY: D-UA-M7793-0-0
TITLE: DELUNA LINK MODULE (LNKL)
SIZE K
CODE CS
NUMBER M7793-0-LNKL
REV. C
XTRA: DENSMORE LNKLB.DRW;19-FEB-85 10:16
FIRST USED ON OPTION/MODEL: DELUNA
REVISIONS
CHK CHANGE NO. REV
MK005 C
MKO 1
THIS DRAWING AND SPECIFICATIONS, HEREIN, ARE THE PROPERTY OF DIGITAL EQUIPMENT CORPORATION AND SHALL NOT BE REPRODUCED OR COPIED OR USED IN WHOLE OR IN PART AS THE BASIS FOR THE MANUFACTURE OR SALE OF ITEMS WITHOUT WRITTEN PERMISSION. COPYRIGHT © 1985, DIGITAL EQUIPMENT CORPORATION.

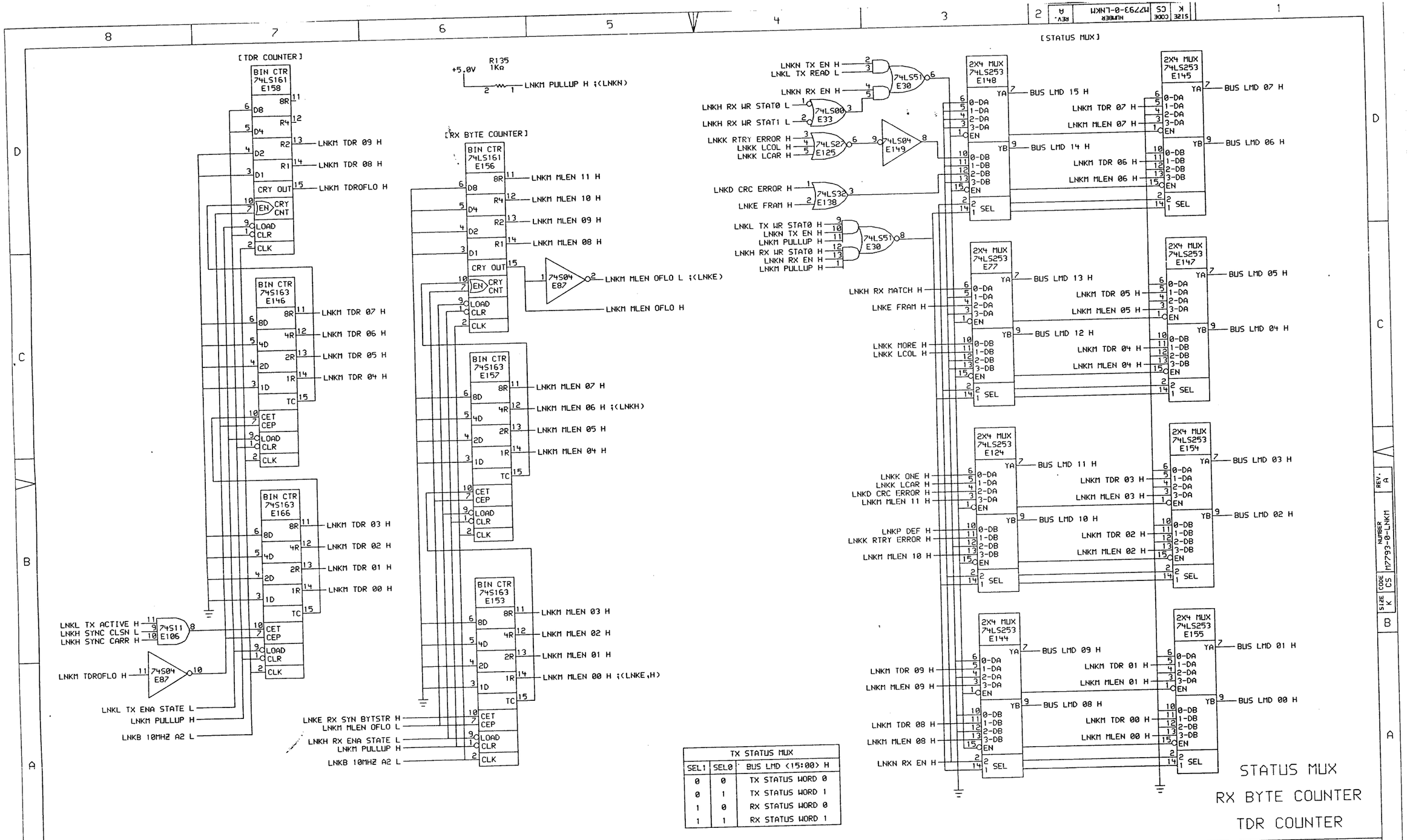

TX STATUS MUX		
SEL1	SEL0	BUS LMD <15:00> H
0	0	TX STATUS WORD 0
0	1	TX STATUS WORD 1
1	0	RX STATUS WORD 0
1	1	RX STATUS WORD 1

REVISIONS		
CHK	CHANGE NO.	REV

digital

DRN: K. Sargent DATE 24-NOV-82
CHK: D. Tom Walsh DATE 24-NOV-82
ENG. Neil Bloomberg DATE 24-NOV-82
BOARD LOCATION:
SHEET 1 OF 1
DSKD:<SARGENT>LNKM.DRW 24-NOV-82 06:32
NEXT HIGHER ASSEMBLY: D-UA-M7793-0-0
FIRST USED ON OPTION/MODEL: DELUNA

TITLE: DELUNA LINK MODULE (LNKM)

SIZE	CODE	NUMBER	REV.
K	CS	M7793-0-LNKM	A

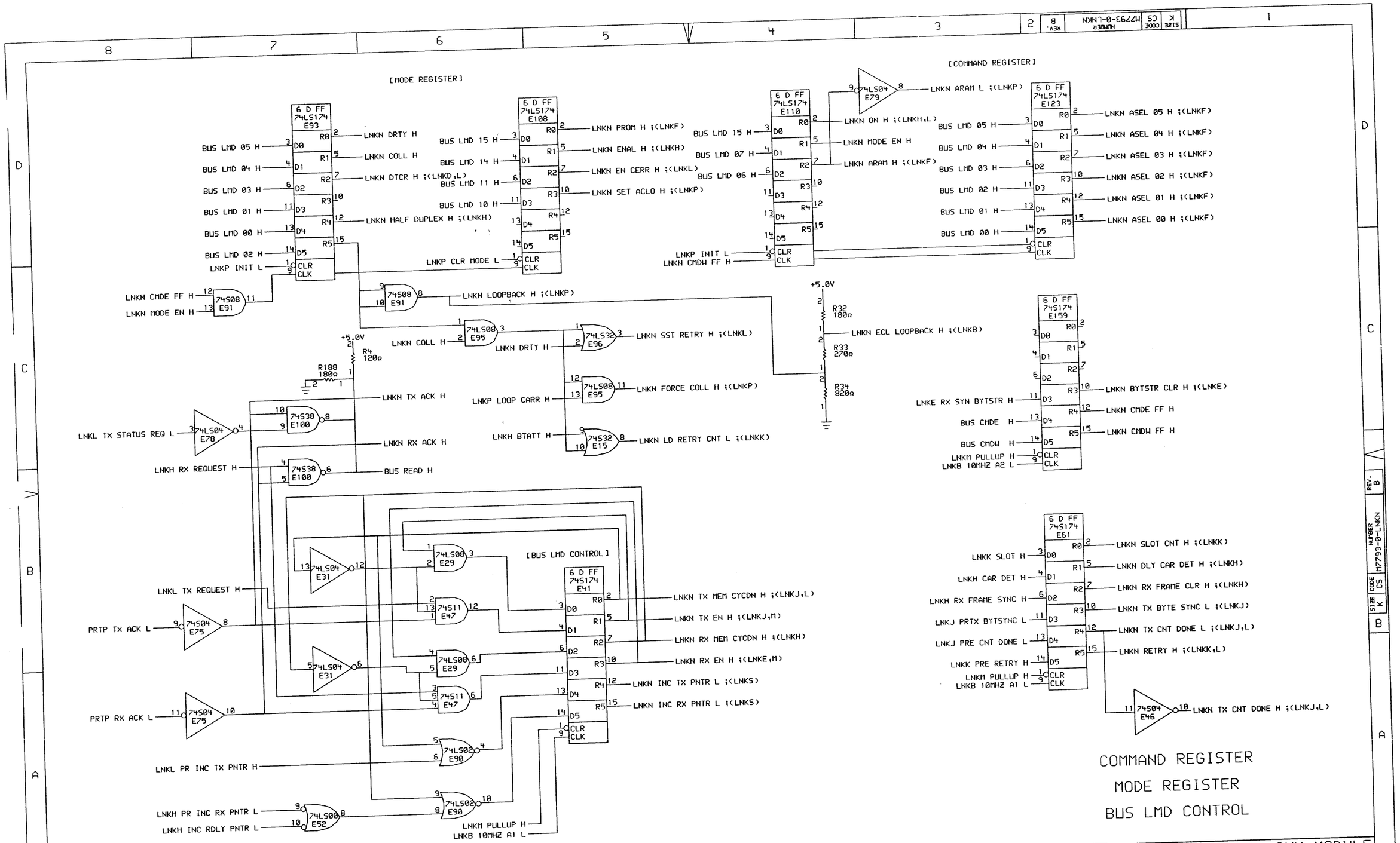

REVISIONS		
CHK	CHANGE NO.	REV

DRN: K.L. Sargent — DATE 09-MAY-83
CHK: D. Tom Walsh — DATE 09-MAY-83
ENG. Neil Bloomberg — DATE 09-MAY-83
DSKE:<SARGENT>LNKNB.DRW 09-MAY-83 07:04
FIRST USED ON OPTION/MODEL: DELUNA
BOARD LOCATION:
SHEET 1 OF 1
NEXT HIGHER ASSEMBLY: D-UA-M7793-0-0

TITLE: DELUNA LINK MODULE (LNKN)

SIZE	CODE	NUMBER	REV.
K	CS	M7793-0-LNKN	B

TW

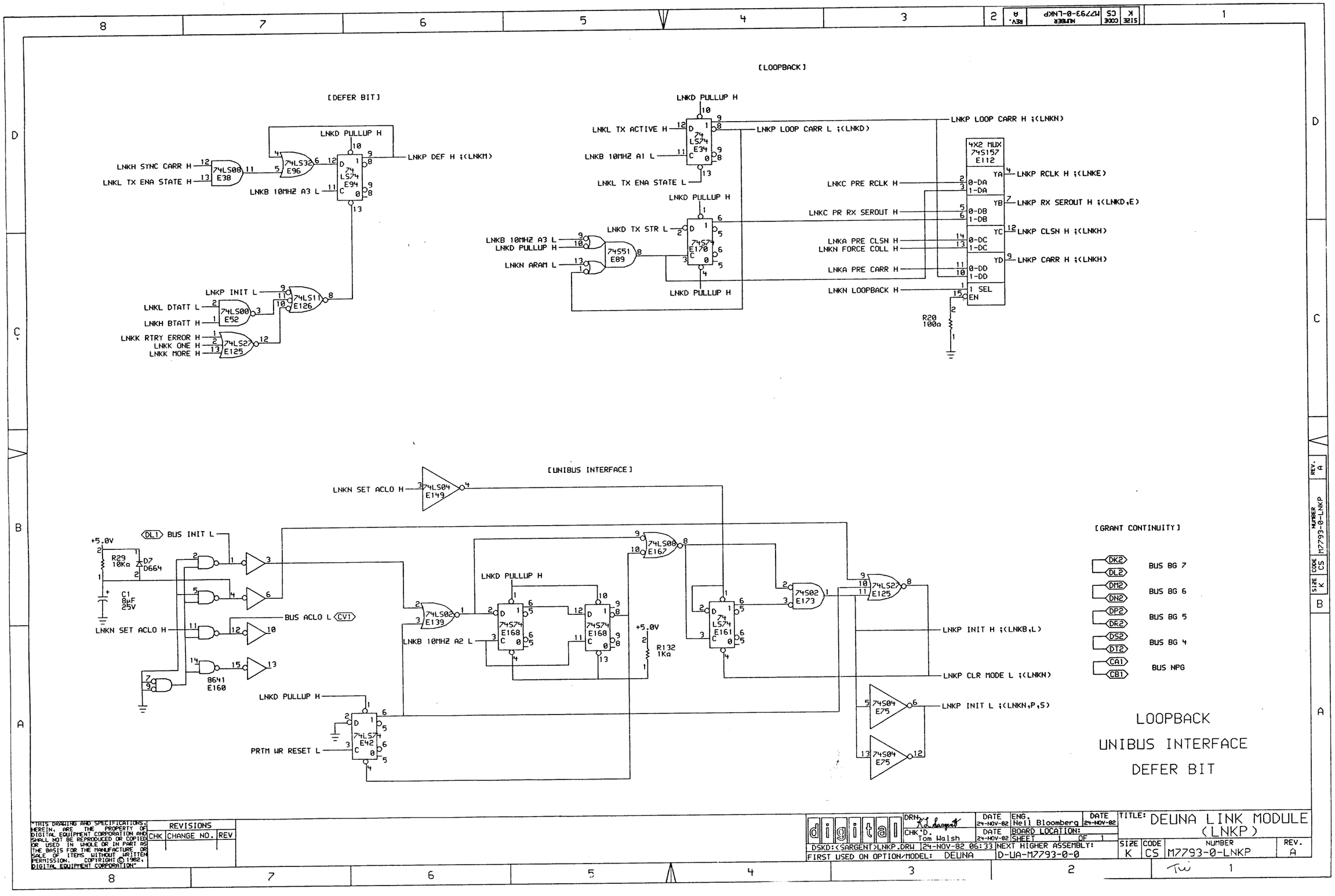

REVISIONS		
CHK	CHANGE NO.	REV

DRN: DATE 24-NOV-82 ENG. Neil Bloomberg DATE 24-NOV-82
CHK'D. Tom Walsh DATE 24-NOV-82 BOARD LOCATION: SHEET 1 OF 1
DSKD:<SARGENT>LNKP.DRW 24-NOV-82 06:33 NEXT HIGHER ASSEMBLY: D-UA-M7793-0-0
FIRST USED ON OPTION/MODEL: DELUNA

TITLE: DELUNA LINK MODULE (LNKP)

SIZE	CODE	NUMBER	REV.
K	CS	M7793-0-LNKP	A

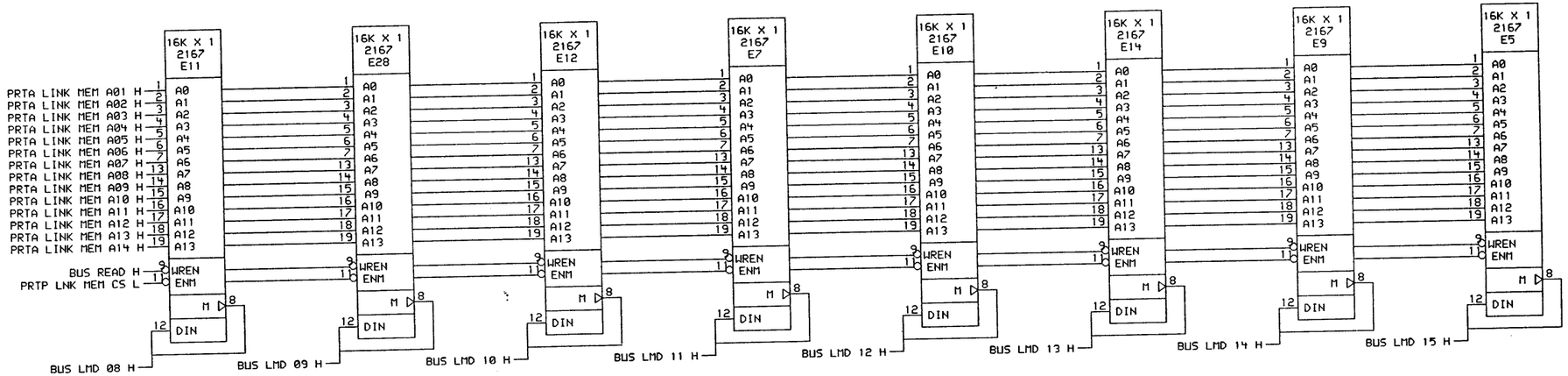

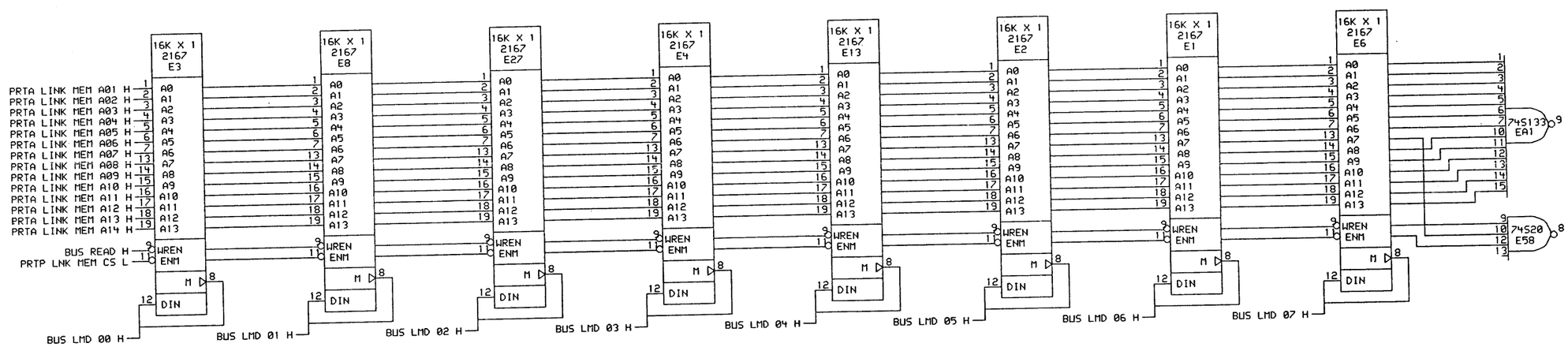

LINK MEMORY

REVISIONS		
CHK	CHANGE NO.	REV

digital

DRN: K. Sargent — DATE 09-MAY-83
CHK'D: Tom Walsh — DATE 09-MAY-83
ENG: Nell Bloomberg — DATE 09-MAY-83
BOARD LOCATION:
SHEET 1 OF 1
NEXT HIGHER ASSEMBLY: D-UA-M7793-0-0
DSKE:<SARGENT>LNKRC.DRW 09-MAY-83 07:31
FIRST USED ON OPTION/MODEL: DEUNA

TITLE: DEUNA LINK MODULE (LNKR)

SIZE	CODE	NUMBER	REV.
K	CS	M7793-0-LNKR	C

TW 1

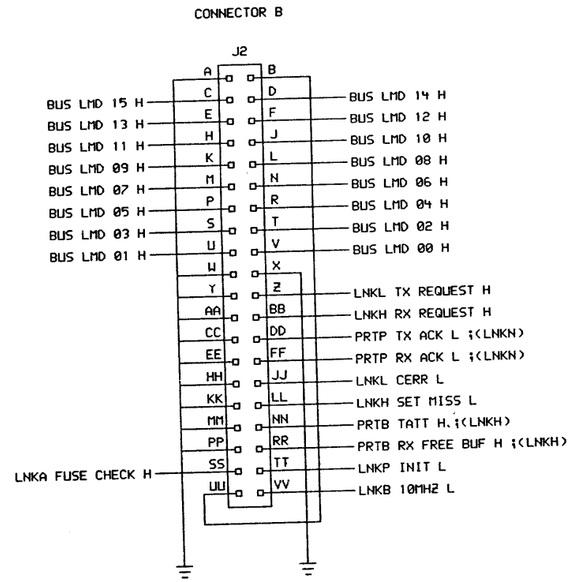

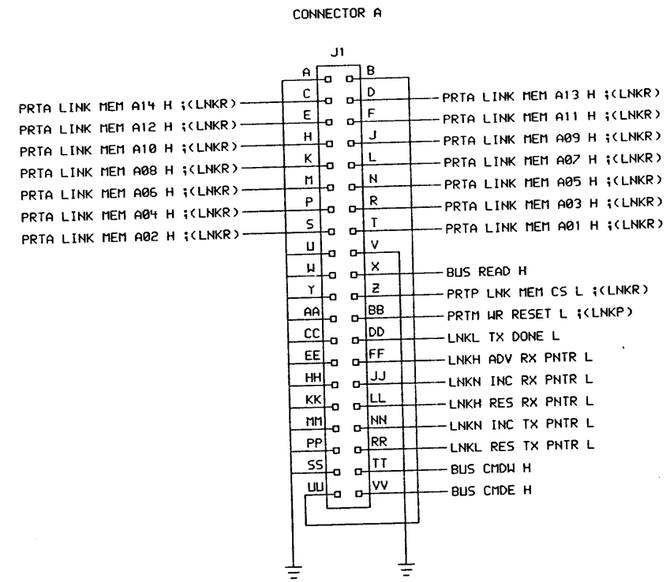

LINK MODULE FORWARD REFERENCE	
LINK OUTPUT	PORT CS
LNKL TX REQUEST H	PRTP
LNKH RX REQUEST H	PRTP
LNKL CERR L	PRTB
LNKH SET MISS L	PRTB
LNKP INIT L	PRTB,C,E,M,N,P
BUS READ H	PRTC,P
BUS LMD <15:00> H	PRTA,C
LNKB 10MHZ L	PRTA,C,N,P
LNKL TX DONE L	PRTB
BUS CMDW H	PRTP
BUS CMDE H	PRTP
LNKH ADV RX PNTR L	PRTB
LNKN INC RX PNTR L	PRTB
LNKH RES RX PNTR L	PRTB
LNKN INC TX PNTR L	PRTB
LNKL RES TX PNTR L	PRTB

PORT/LINK INTERCONNECT CABLE CONNECTORS

REVISIONS		
CHK	CHANGE NO.	REV

DRN: K. Sargent DATE 24-NOV-82
CHK: D. Tom Walsh DATE 24-NOV-82
ENG: Neil Bloomberg DATE 24-NOV-82
BOARD LOCATION:
SHEET 1 OF 1
NEXT HIGHER ASSEMBLY: D-UA-M7793-0-0
DSKD:<SARGENT>LNKS.DRW 24-NOV-82 06:33
FIRST USED ON OPTION/MODEL: DELUNA

TITLE: DELUNA LINK MODULE (LNKS)

SIZE	CODE	NUMBER	REV.
K	CS	M7793-0-LNKS	A

SIZE K CODE CS NUMBER M7793-0-LNKS REV. A

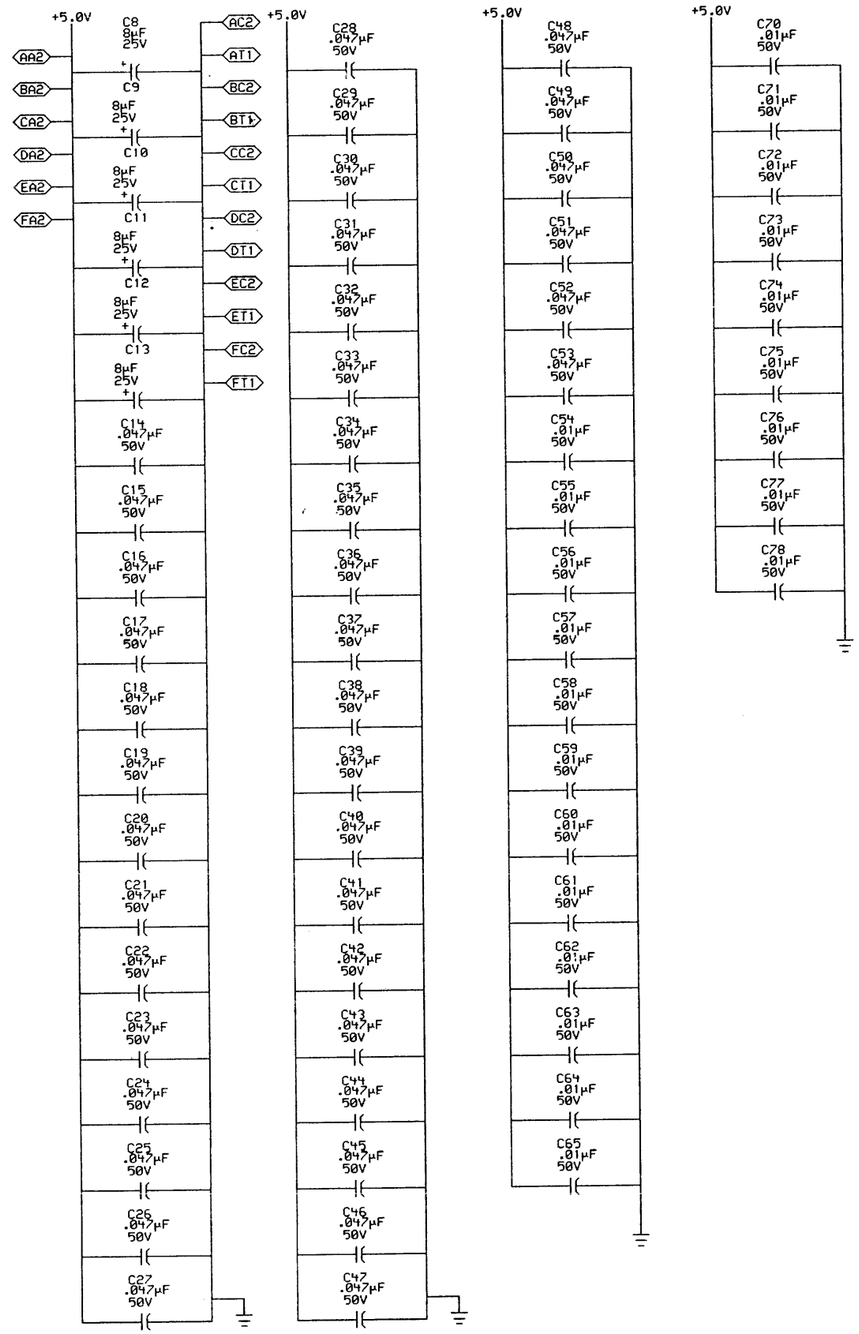

BYPASS CAPACITORS

REVISIONS		
CHK	CHANGE NO.	REV

DRN: L. Sargent — DATE 09-MAY-83
CHK'D: Tom Walsh — DATE 09-MAY-83
ENG: Neil Bloomberg — DATE 09-MAY-83
BOARD LOCATION:
SHEET 1 OF 1
DSKE:<SARGENT>LNKTB.DRW 09-MAY-83 07:43
NEXT HIGHER ASSEMBLY: D-UA-M7793-0-0
FIRST USED ON OPTION/MODEL: DELUNA

TITLE: DELUNA LINK MODULE (LNKT)

SIZE	CODE	NUMBER	REV.
K	CS	M7793-0-LNKT	B

TW

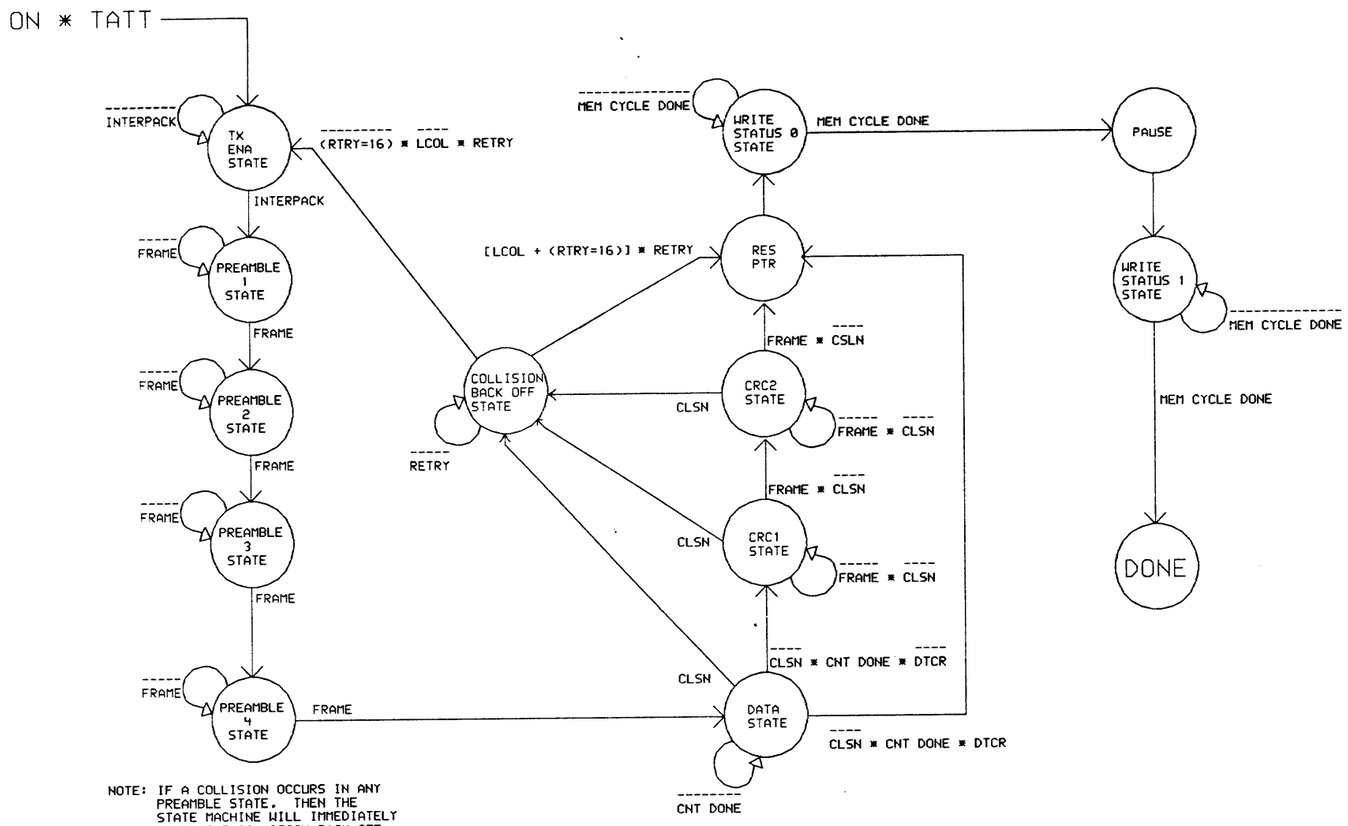

NOTE: IF A COLLISION OCCURS IN ANY PREAMBLE STATE. THEN THE STATE MACHINE WILL IMMEDIATELY ENTER THE COLLISION BACK OFF STATE, UPON COMPLETION OF PREAMBLE 4 STATE.

TRANSMIT STATE MACHINE INPUTS

PROCESS STATE	REFERENCE SIGNAL	REFERENCE PIN
INTERPACK	LNKL INTERPACK L	E92-19
ON	LNKN ON H	E110-2
TATT	LNKH BTATT H	E81-5
FRAME	LNKJ TX FRAME H	E87-8
CSLN	LNKH SYNC CLSN H	E81-12
RETRY	LNKN RETRY H	E61-15
RTRY	LNKK RTRY H	E21-15
CNT DONE	LNKN TX CNT DONE L	E61-12
MEM CYCLE DONE	LNKN TX MEM CYCDN H	E41-2
DTCR	LNKN DTCR H	E93-7

TRANSMIT STATE MACHINE OUTPUTS

PROCESS STATE	REFERENCE SIGNAL	REFERENCE PIN
TX ENA STATE	LNKL TX ENA STATE L	E49-12
TX PREAMBLE 1 STATE	LNKL PREAM 1 STATE L	E49-13
	LNKL TX LEN REQ L	E36-17
TX PREAMBLE 2 STATE	LNKL PREAM 2 STATE L	E49-14
TX PREAMBLE 3 STATE	LNKL PREAM 3 STATE L	E49-15
TX PREAMBLE 4 STATE	LNKL PREAM 4 STATE L	E49-16
DATA STATE	LNKL TX DATA STATE L	E49-18
	LNKL TX ENA CRC L	E36-15
	LNKL SEL TX DATA L	E36-16
CRC 1 STATE	NONE - LOW ASSERTED	E51-12
CRC 2 STATE	NONE - LOW ASSERTED	E51-13
RES PTR STATE	LNKL RES TX PNTR L	E38-8
INC PTR STATE	LNKN INC TX PNTR L	E41-12
WRITE STATUS 0 STATE	LNKL TX WR STAT0 L	E51-15
WRITE STATUS 1 STATE	LNKL TX WR STAT1 L	E51-16
DATA REQUEST STATE	LNKL TX REQUEST H	E62-12
	PP TX ACK L	PORT
	BUS READ H	E100-6
	LNKN TX MEM CYCDN H	E41-2
DONE	LNKL TX DONE L	E51-18

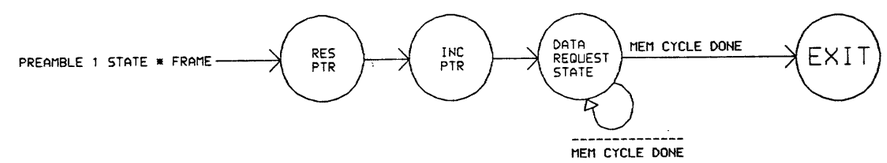

(LOAD BYTE COUNTER STATE)

THIS IS A COPROCESS THAT OPERATES CONCURRENTLY WITH THE TRANSMIT STATE MACHINE.

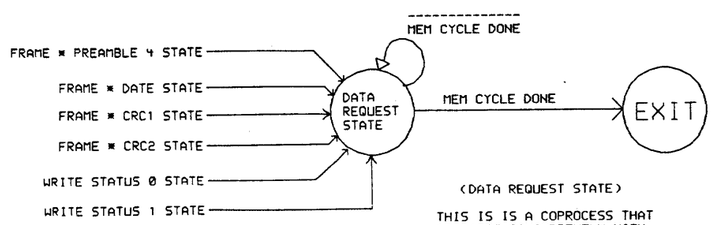

(DATA REQUEST STATE)

THIS IS IS A COPROCESS THAT OPERATES CONCURRENTLY WITH THE TRANSMIT STATE MACHINE.

TRANSMIT STATE MACHINE-LNKL
STATE DIAGRAM-1

REVISIONS		
CHK	CHANGE NO.	REV

DRN. D.BLANCHARD DATE 17-NOV-82 ENG. Neil Bloomberg DATE 17-NOV-82
CHK D. Clement DATE 17-NOV-82 BOARD LOCATION: SHEET 1 OF 1
DSKD:<SARGENT>LNKSD1.DRW 05-NOV-82 16:08 NEXT HIGHER ASSEMBLY: D-UA-M7793-0-0
FIRST USED ON OPTION/MODEL: DELNA

TITLE: DELNA LINK MODULE (LNK)

SIZE	CODE	NUMBER	REV.
K	CS	M7793-0-SD1	A

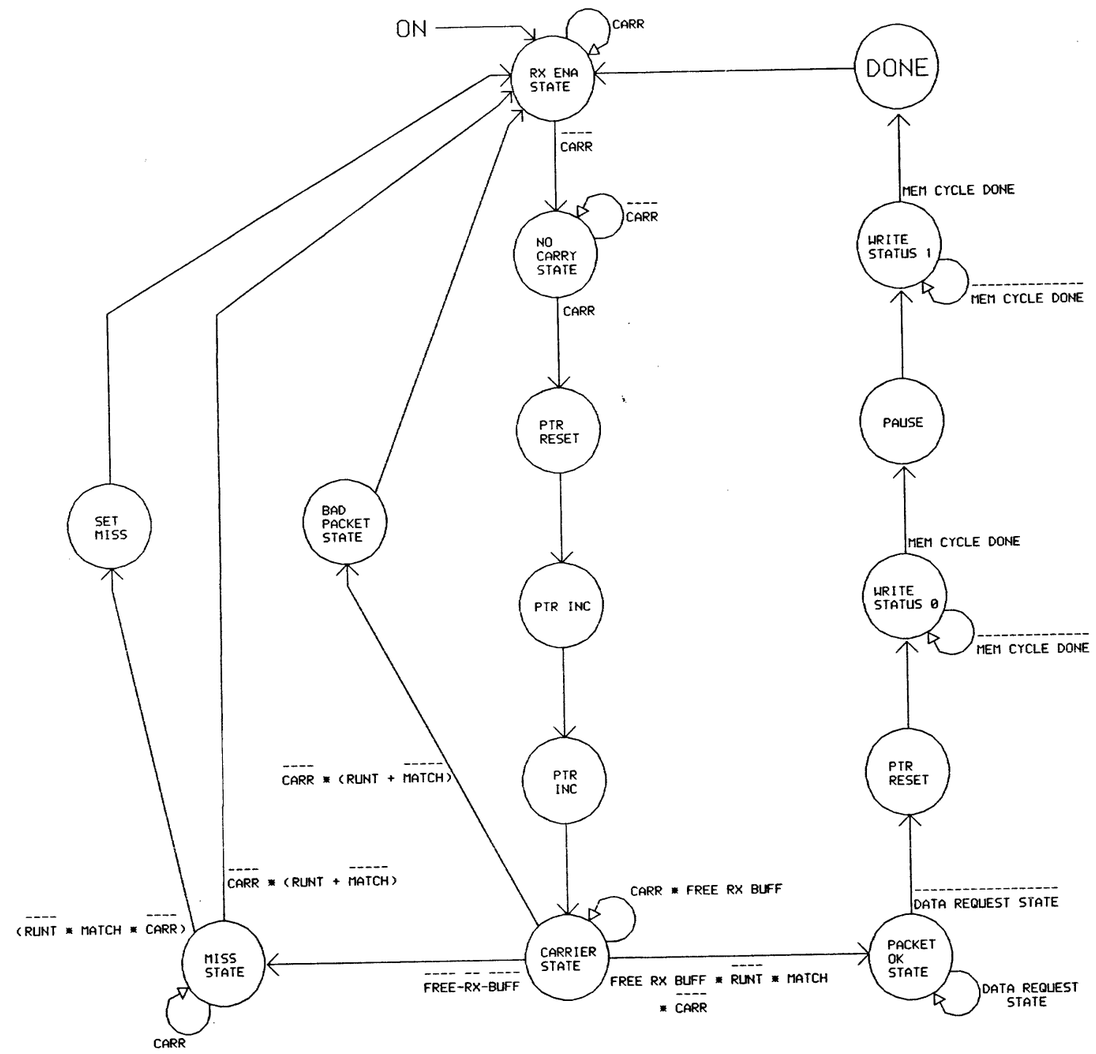

RECEIVE STATE MACHINE INPUTS

PROCESS STATE	REFERENCE SIGNAL	REFERENCE PIN
CARRIER	LNKN DLY CAR DET H	E61-5
ON	LNKN ON H	E110-2
RUNT	NONE - HIGH ASSERTED	E138-6
MATCH	LNKH RX MATCH H	E133-15
FREE RX BUFF	PB RX FREE BUFF H	PORT
MEM CYCLE DONE	LNKN RX MEM CYCDN H	E41-7
FRAME SYNC	LNKH RX FRAME SYNC H	E107-9
START BIT	LNKE RX START BIT H	E73-10

RECEIVE STATE MACHINE OUTPUTS

PROCESS STATE	REFERENCE SIGNAL	REFERENCE PIN
RX ENA STATE	LNKH RX ENA STATE L	E37-12
NO CARRIER STATE	NONE - LOW ASSERTED	E37-15
PTR RESET	LNKH RES RX PNTR L	E38-6
PTR INC	LNKN INC RX PNTR L	E41-15
	LNKH PR INC RX PNTR L	E37-14
CARRIER STATE	LNKH RX ACTIVE H	E99-10
PACK OK STATE	NONE - LOW ASSERTED	E37-18
	LINKH RX ODD BYTE L	E32-19
MISS STATE	NONE - LOW ASSERTED	E37-19
SET MISS	LNKH SET MISS L	E32-12
WRITE STATUS 0	LNKH RX WR STAT0 L	E32-14
	LNKH RX REQUEST H	E62-8
WRITE STATUS 1	LNKH RX WR STAT1 L	E32-16
	LNKH RX REQUEST H	E62-8
PAUSE	NONE - LOW ASSERTED	E32-15
DATA STATE	LNKH RX REQUEST H	E62-8
	PP RX ACK L	PORT
	BUS READ	E100-6
	LNKN RX MEM CYCDN H	E41-7
DONE	LNKH ADV RX PNTR L	E32-17

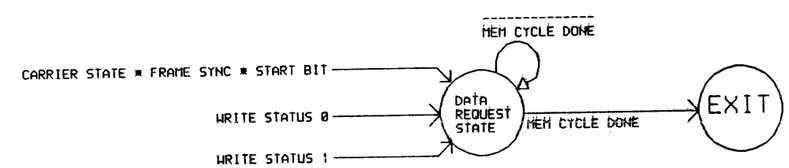

(DATA REQUEST STATE)

THIS IS A COPROCESS THAT OPERATES CONCURRENTLY WITH THE RECEIVE STATE MACHINE

RECEIVE STATE MACHINE-LNKH
STATE DIAGRAM-2

REVISIONS		
CHK	CHANGE NO.	REV

digital

DRN. D. BLANCHARD DATE 17-NOV-82 ENG. Neil Bloomberg DATE 17-NOV-82
CHK'D DATE 17-NOV-82 BOARD LOCATION: SHEET 1 OF 1
DSKD:<SARGENT>LNKSD2.DRW;05-NOV-82 16:08 NEXT HIGHER ASSEMBLY: D-UA-M7793-0-0
FIRST USED ON OPTION/MODEL: DELUNA

TITLE: DELUNA LINK MODULE (LNK)

SIZE	CODE	NUMBER	REV.
K	CS	M7793-0-SD2	A

TW

SIZE K CODE CS NUMBER M7793-0-SD2 REV. A

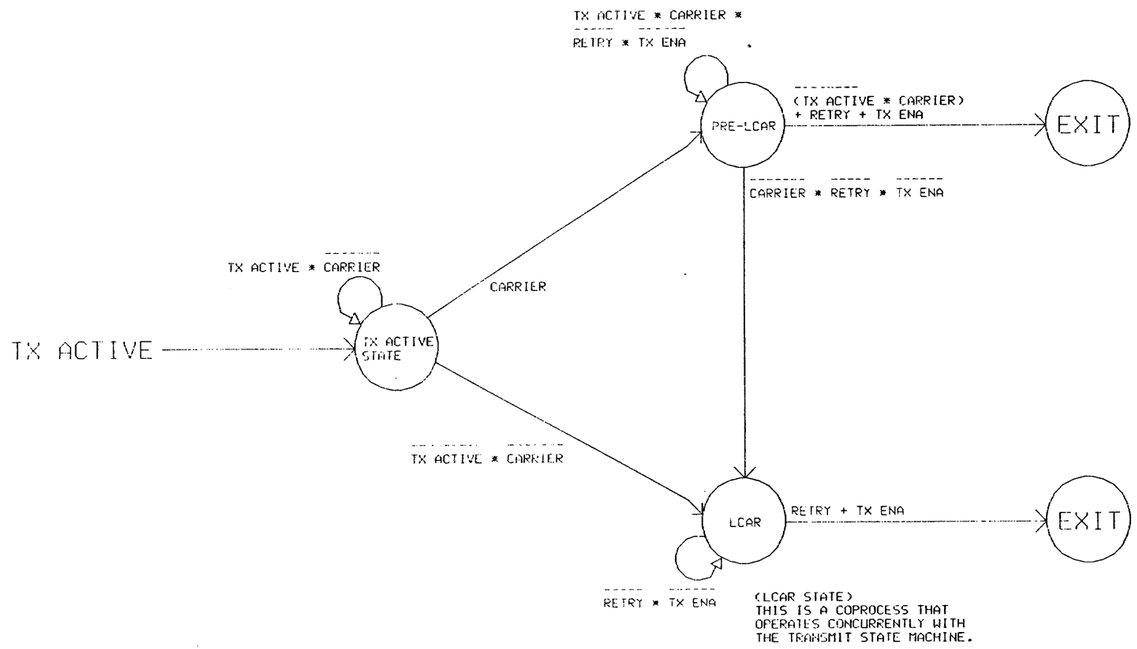

LCAR, LCOL STATE INPUTS

PROCESS STATE	REFERENCE SIGNAL	REFERENCE PIN
TX ENA	LNKL TX ENA STATE H	E35-6
SLOTTIME	LNKK SLOTTIME EN H	E39-13
CLSN	LNKH SYNC CISN H	E81-12
CARRIER	LNKH SYNC CARR H	E81-16
RETRY	LNKK RETRY STATE H	E79-4
TX ACTIVE	LNKL TX ACTIVE H	E109-8

LCAR,LCOL STATE OUTPUTS

PROCESS STATE	REFERENCE SIGNAL	REFERENCE PIN
LCOL	LNKK LCOL H	E35-10
LCAR	LNKK LCAR H	E78-8

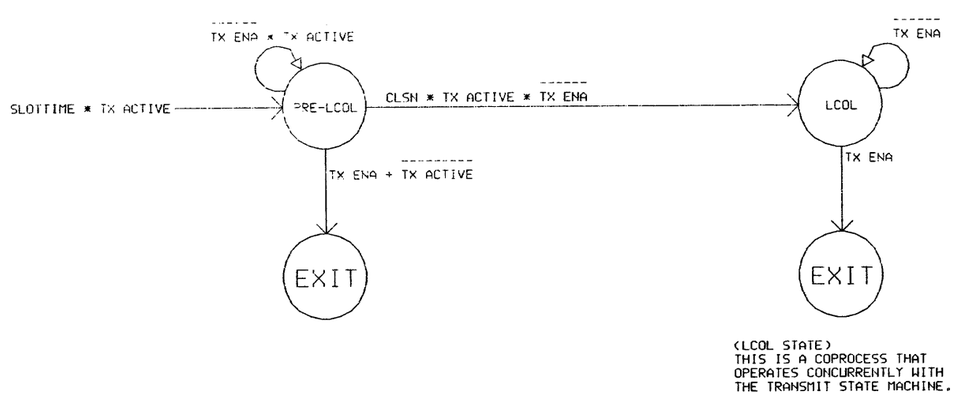

LCAR, LCOL-LNKK
STATE DIAGRAM-3

REVISIONS		
CHK	CHANGE NO.	REV

DRN. D. BLANCHARD	DATE 17-NOV-82	ENG. Nell Bloomberg	DATE 17-NOV-82
CHKD.	DATE 17-NOV-82	BOARD LOCATION: SHEET 1 OF 1	
DSKD:<SARGENT>LNKSD3.DRW 05-NOV-82 16:08		NEXT HIGHER ASSEMBLY: D-UA-M7793-0-0	
FIRST USED ON OPTION/MODEL: DEUNA			

TITLE: DEUNA LINK MODULE (LNK)

SIZE	CODE	NUMBER	REV.
K	CS	M7793-0-SD3	A

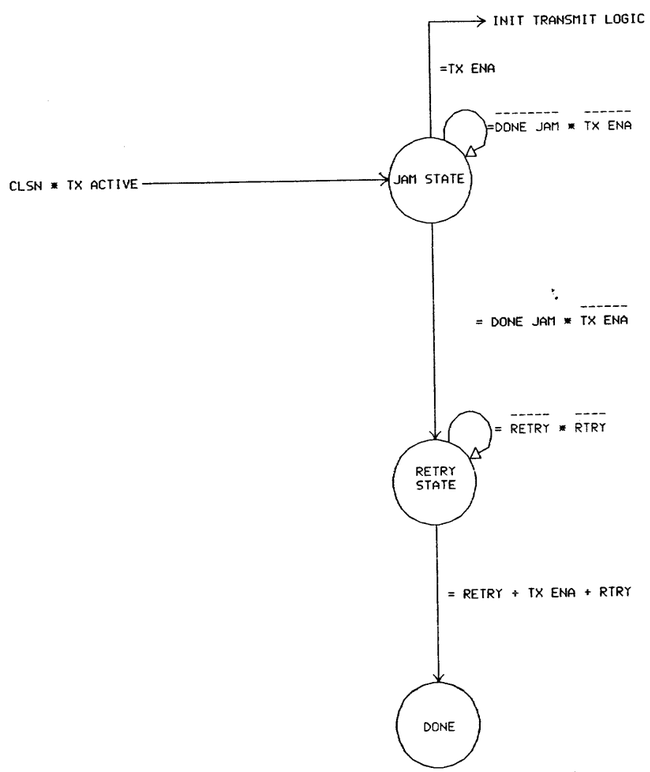

COLLISION BACK OFF STATE INPUTS

PROCESS_STATE	REFERENCE_SIGNAL	REFERENCE_PIN
TX ENA	LNKL TX ENA STATE H	E35-6
CISN	LNKH SYNC CISN H	E81-12
DONE JAM	LNKK COLLISION JAM H	E40-13
RETRY	LNKN RETRY H	E61-15
RTRY	LNKK RTRY H	E21-15

COLLISION BACK OFF STATE OUTPUTS

PROCESS_STATE	REFERENCE_SIGNAL	REFERENCE_PIN
RETRY STATE	LNKK RETRY STATE L	E50-18
JAM STATE	LNKK JAM STATE L	E50-17
	LNKK RETRY INIT L	E50-19

DEFINITIONS

RTRY: FAILURE TO TRANSMIT IN 16 ATTEMPTS DUE TO COLLISION

RETRY: PROPER NUMBER OF SLOTTIMES HAS ELAPSED. TIME TO RETRANSMIT

DONE JAM: TELLS JAM STATE 32 BITS HAVE ELAPSED STOP JAMMING

COLLISION BACK OFF STATE-LNKK

STATE DIAGRAM-4

REVISIONS		
CHK	CHANGE NO.	REV

digital

DRN. C. GIROUARD" DATE 17-NOV-82 ENG. Nell Bloomberg DATE 17-NOV-82

CHK D. Adams DATE 17-NOV-82 BOARD LOCATION: SHEET 1 OF 1

DSKD:<SARGENT>LNKSD4.DRW;05-NOV-82 16:08 NEXT HIGHER ASSEMBLY: D-UA-M7793-0-0

FIRST USED ON OPTION/MODEL: DELUNA

TITLE: DELUNA LINK MODULE (LNK)

SIZE	CODE	NUMBER	REV.
K	CS	M7793-0-SD4	A

SIZE K CODE CS NUMBER M7793-0-SD4 REV. A

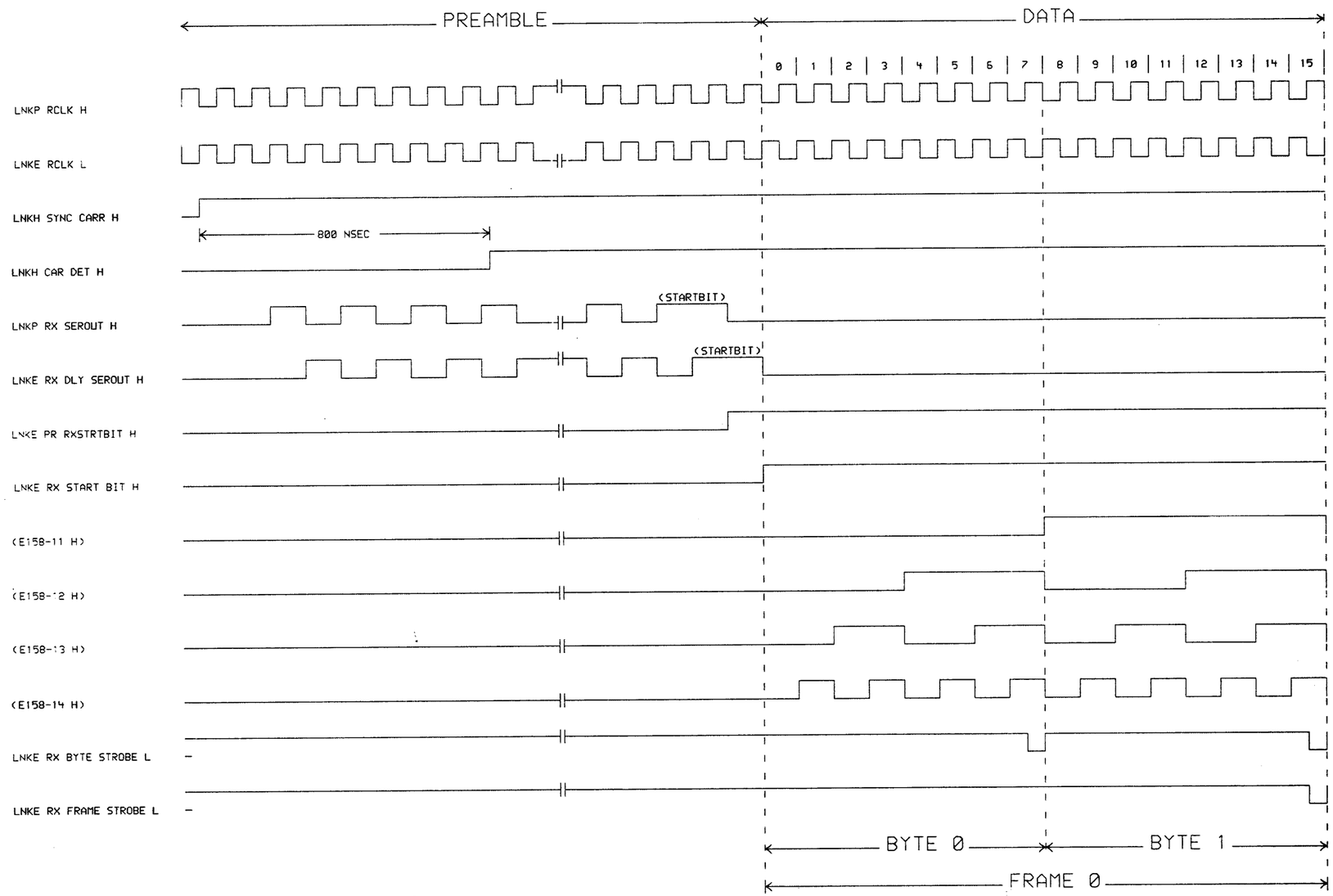

RECEIVE BYTE TIMING-LNKE

TIMING DIAGRAM-1

REVISIONS		
CHK	CHANGE NO.	REV

DRN. PAUL HEBERT" DATE 17-NOV-82 | ENG. Neil Bloomberg DATE 17-NOV-82 | TITLE: DELNA LINK MODULE (LNK)

CHK: DATE 17-NOV-82 | BOARD LOCATION: SHEET 1 OF 1

DSKD:<SARGENT>LNKTDA.DRW|17-NOV-82 11:01 | NEXT HIGHER ASSEMBLY: D-UA-M7793-0-0

FIRST USED ON OPTION/MODEL: DELNA

SIZE	CODE	NUMBER	REV.
K	CS	M7793-0-TDA	A

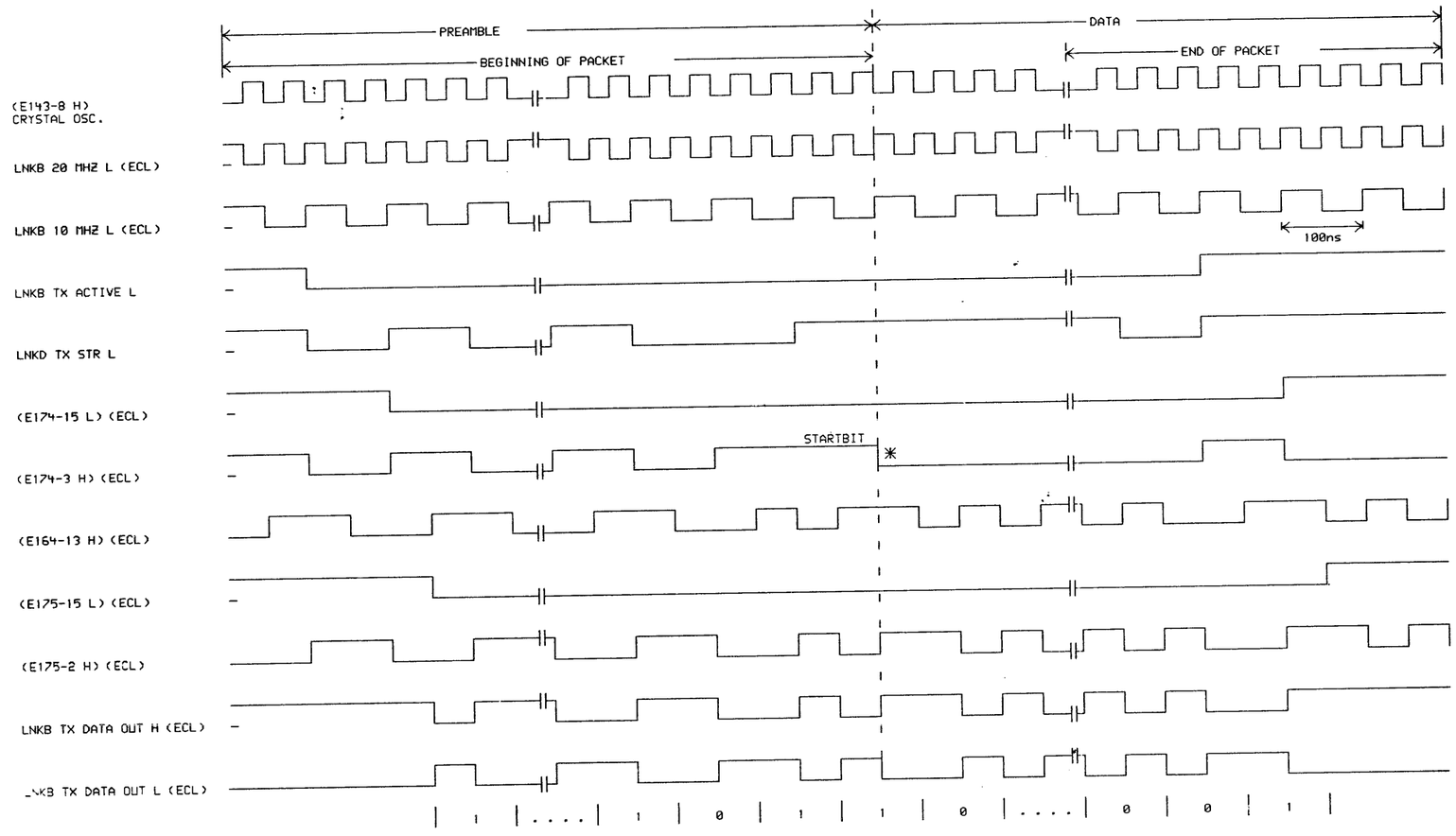

*DATA INDICATED HERE
CAN BE ANY PATTERN

TRANSMIT DATA ENCODE-LNKB

TIMING DIAGRAM-3

REVISIONS		
CHK	CHANGE NO.	REV

DRN. PAUL HEBERT" DATE 17-NOV-82 ENG. Neil Bloomberg DATE 17-NOV-82
CHK'D. R. Bennett DATE 17-NOV-82 BOARD LOCATION: SHEET 1 OF 1
DSKD:<SARGENT>LNKTDC.DRW 17-NOV-82 11:02 NEXT HIGHER ASSEMBLY:
FIRST USED ON OPTION/MODEL: DELUNA D-UA-M7793-0-0

TITLE: DELUNA LINK MODULE (LNK)

SIZE	CODE	NUMBER	REV.
K	CS	M7793-0-TDC	A

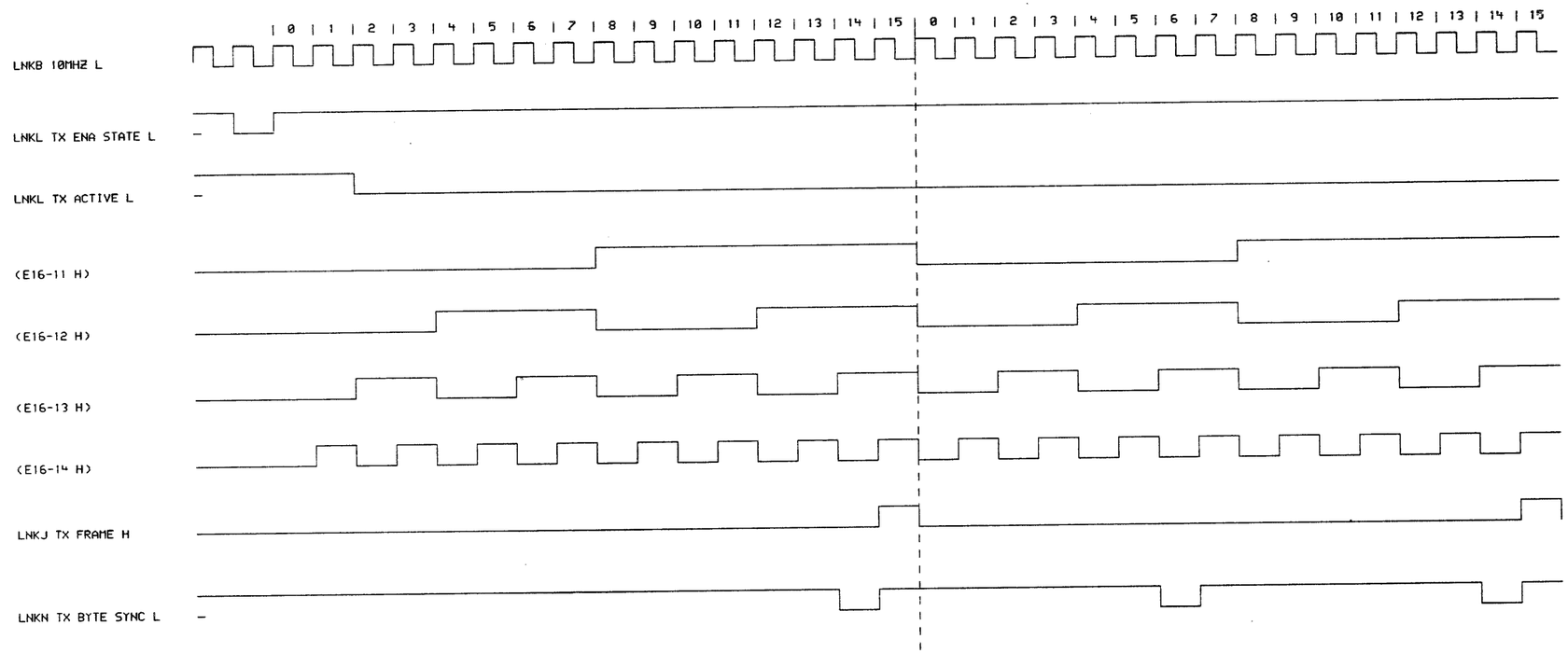

TRANSMIT BYTE/FRAME TIMING-LNKJ

TIMING DIAGRAM-4

REVISIONS		
CHK	CHANGE NO.	REV

DRN. PAUL HEBERT" DATE 17-NOV-82
CHK: R. Sargent DATE 17-NOV-82
ENG. Neil Bloomberg DATE 17-NOV-82
BOARD LOCATION:
SHEET 1 OF 1
DSKD:<SARGENT>LNKTDD.DRW 17-NOV-82 11:02
NEXT HIGHER ASSEMBLY: D-UA-M7793-0-0
FIRST USED ON OPTION/MODEL: DELNA

TITLE: DELNA LINK MODULE (LNK)

SIZE	CODE	NUMBER	REV.
K	CS	M7793-0-TDD	A

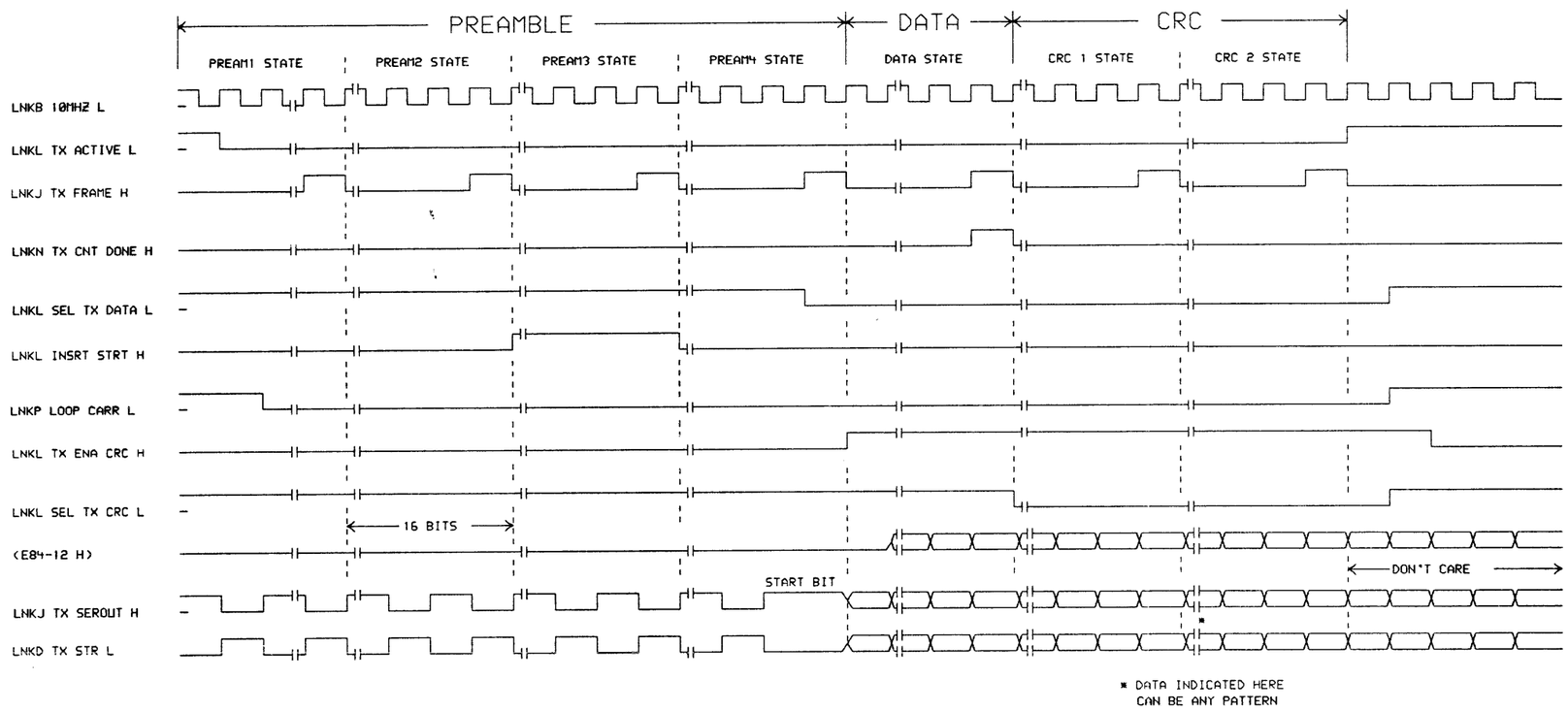

TRANSMIT BIT STREAM-LNKD
TIMING DIAGRAM-5

REVISIONS		
CHK	CHANGE NO.	REV

DRN. CARLSON	DATE 17-NOV-82	ENG. Nell Bloomberg	DATE 17-NOV-82
CHK.	DATE 17-NOV-82	BOARD LOCATION: SHEET 1 OF 1	
DSKD:<SARGENT>LNKTDE.DRW 17-NOV-82 11:02		NEXT HIGHER ASSEMBLY: D-UA-M7793-0-0	
FIRST USED ON OPTION/MODEL: DELNA			

TITLE: DELNA LINK MODULE (LNK)

SIZE	CODE	NUMBER	REV.
K	CS	M7793-0-TDE	A

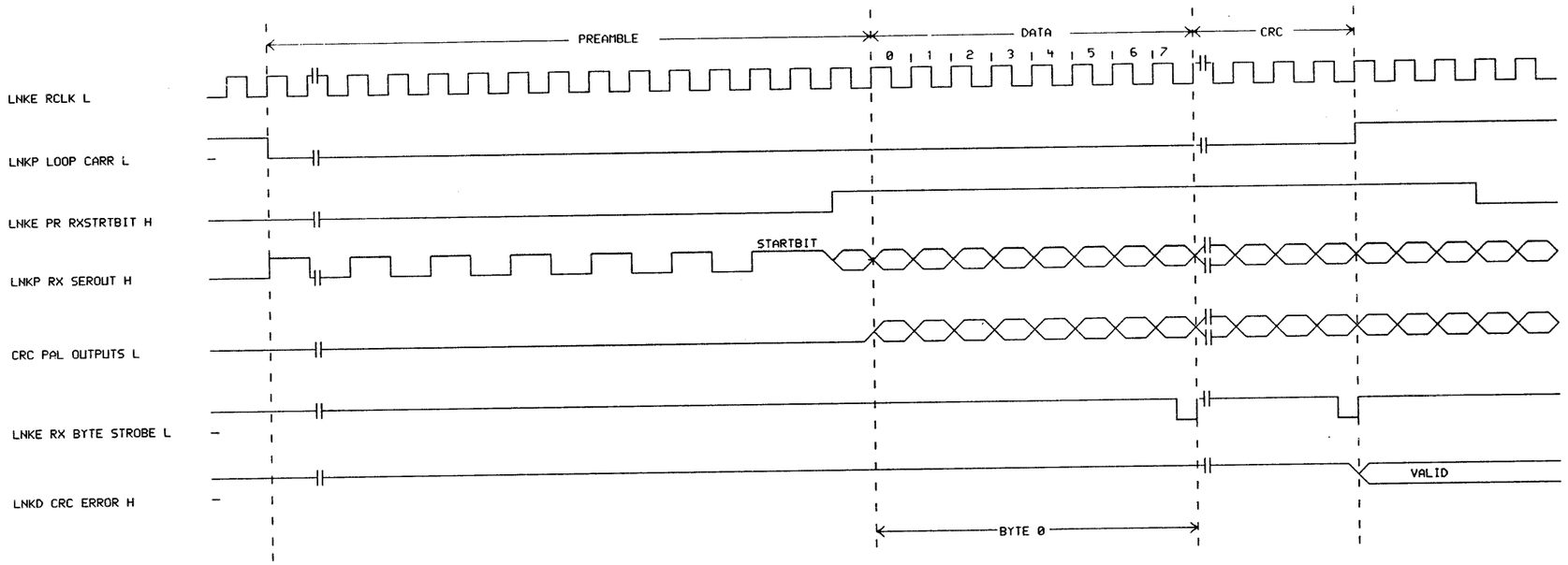

RECEIVE CRC-LNKD

TIMING DIAGRAMS-6

REVISIONS		
CHK	CHANGE NO.	REV

digital

DRN. "PAUL HEBERT" DATE 19-NOV-82 ENG. Neil Bloomberg DATE 19-NOV-82

CHKD. R. Sargent DATE 19-NOV-82 BOARD LOCATION: SHEET 1 OF 1

DSKD:<SARGENT>LNKTDF.DRW 19-NOV-82 08:44 NEXT HIGHER ASSEMBLY: D-UA-M7793-0-0

FIRST USED ON OPTION/MODEL: DELUNA

TITLE: DELUNA LINK MODULE (LNK)

SIZE	CODE	NUMBER	REV.
K	CS	M7793-0-TDF	A

SIZE K CODE CS NUMBER M7793-0-TDF REV. A

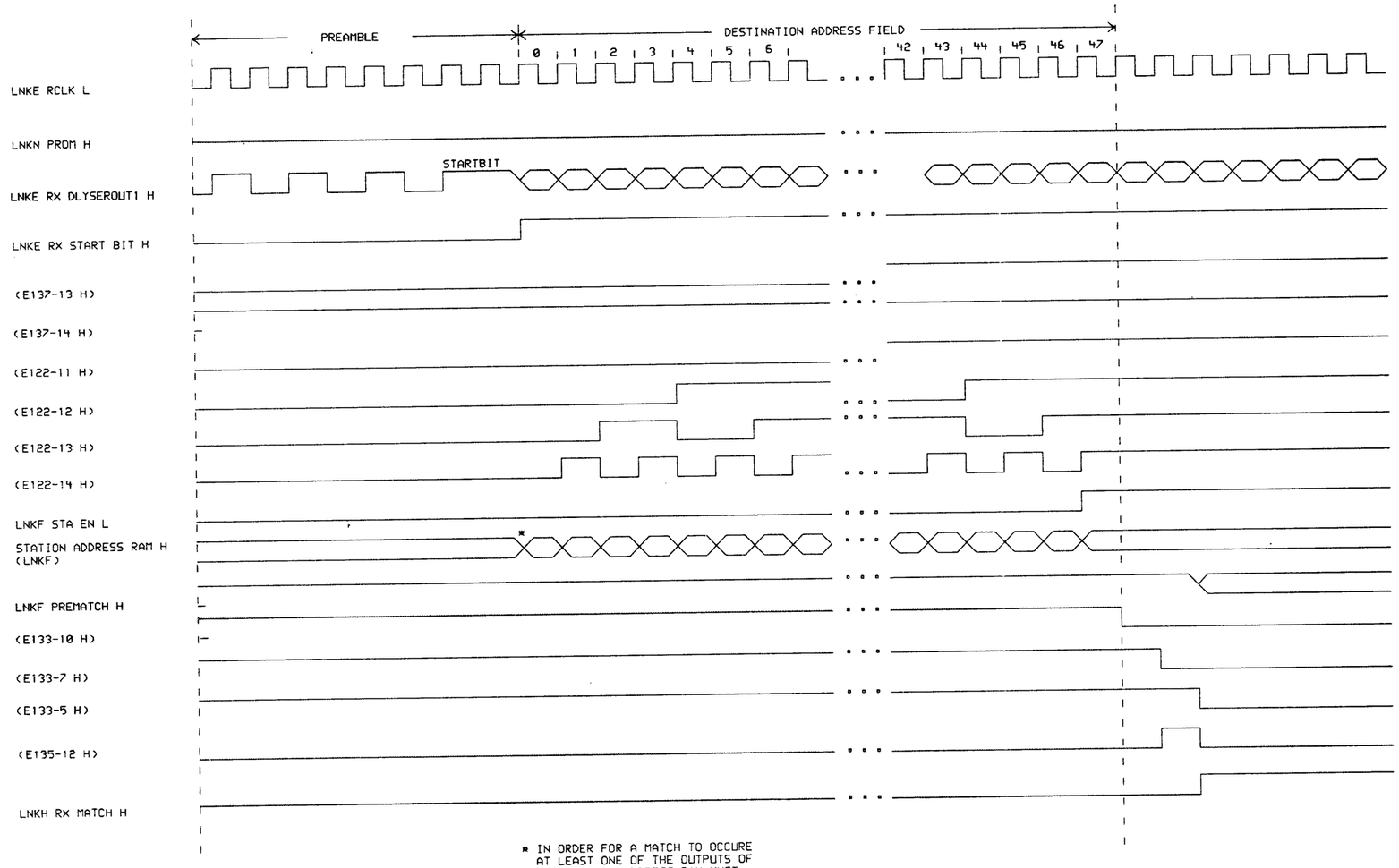

* IN ORDER FOR A MATCH TO OCCURE
AT LEAST ONE OF THE OUTPUTS OF
THE STATION ADDRESS RAM MUST
MATCH THE SIGNAL LNKE RX D1Y SEROUT1 H
FOR ALL 48 BITS OF THE DESTINATION ADDRESS FIELD.

STATION ADDRESS DETECTION-LNKF, LNKH
48 BIT ADDRESS RECOGNITON
TIMING DIAGRAM-7

REVISIONS		
CHK	CHANGE NO.	REV

DRN. C. GIROUARD	DATE 17-NOV-82	ENG. Neil Bloomberg	DATE 17-NOV-82
CHK: D. Lamont	DATE 17-NOV-82	BOARD LOCATION: SHEET 1 OF 1	
DSKD:<SARGENT>LNKTDH.DRW 17-NOV-82 11:03		NEXT HIGHER ASSEMBLY: D-UA-M7793-0-0	
FIRST USED ON OPTION/MODEL: DELUNA			

TITLE: DELUNA LINK MODULE (LNK)

SIZE	CODE	NUMBER	REV.
K	CS	M7793-0-TDH	A

SIZE K CODE CS NUMBER M7793-0-TDH REV. A

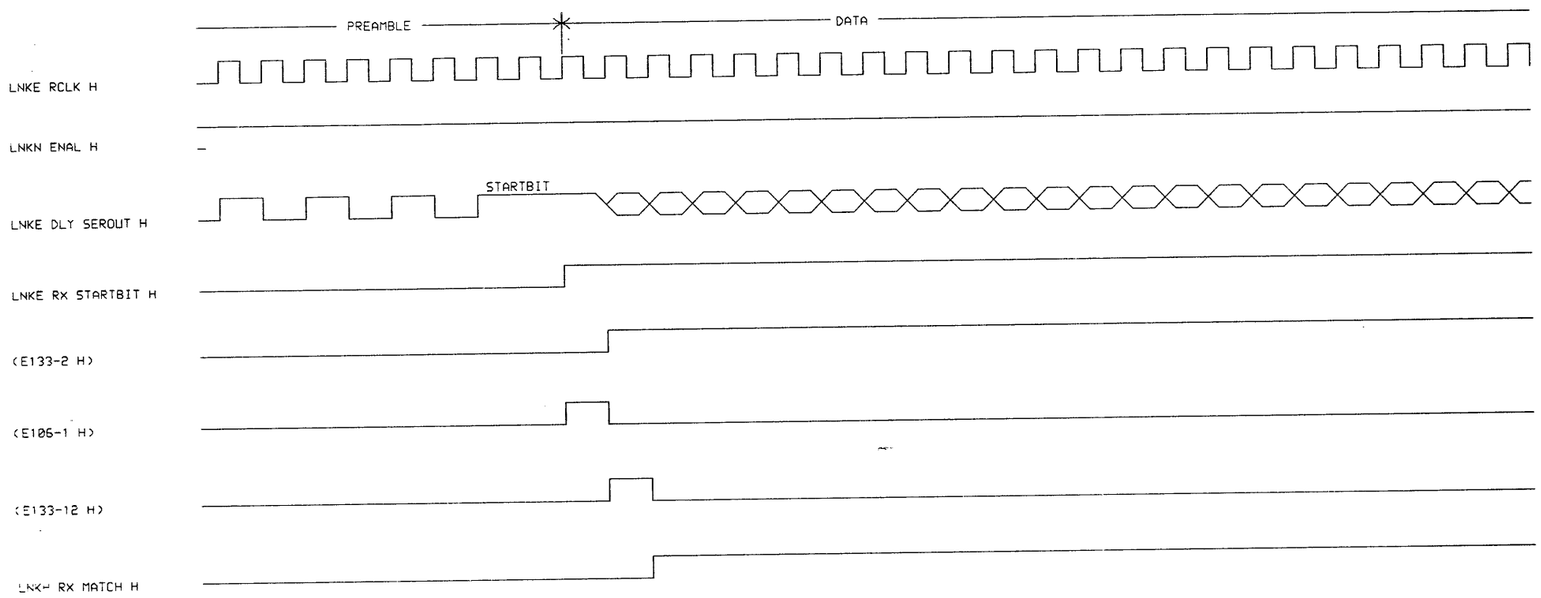

STATION ADDRESS DETECTION-LNKH

ENABLE ALL MULTICAST

TIMING DIAGRAM -8

REVISIONS		
CHK	CHANGE NO.	REV

digital

DRN. PAUL HEBERT" | DATE 17-NOV-82 | ENG. Nell Bloomberg | DATE 17-NOV-82

CHK'D. | DATE 17-NOV-82 | BOARD LOCATION: | SHEET 1 OF 1

DSKD:<SARGENT>LNKTDJ.DRW 17-NOV-82 11:04 | NEXT HIGHER ASSEMBLY: D-UA-M7793-0-0

FIRST USED ON OPTION/MODEL: DELNA

TITLE: DELNA LINK MODULE (LNK)

SIZE	CODE	NUMBER	REV.
K	CS	M7793-0-TDJ	A

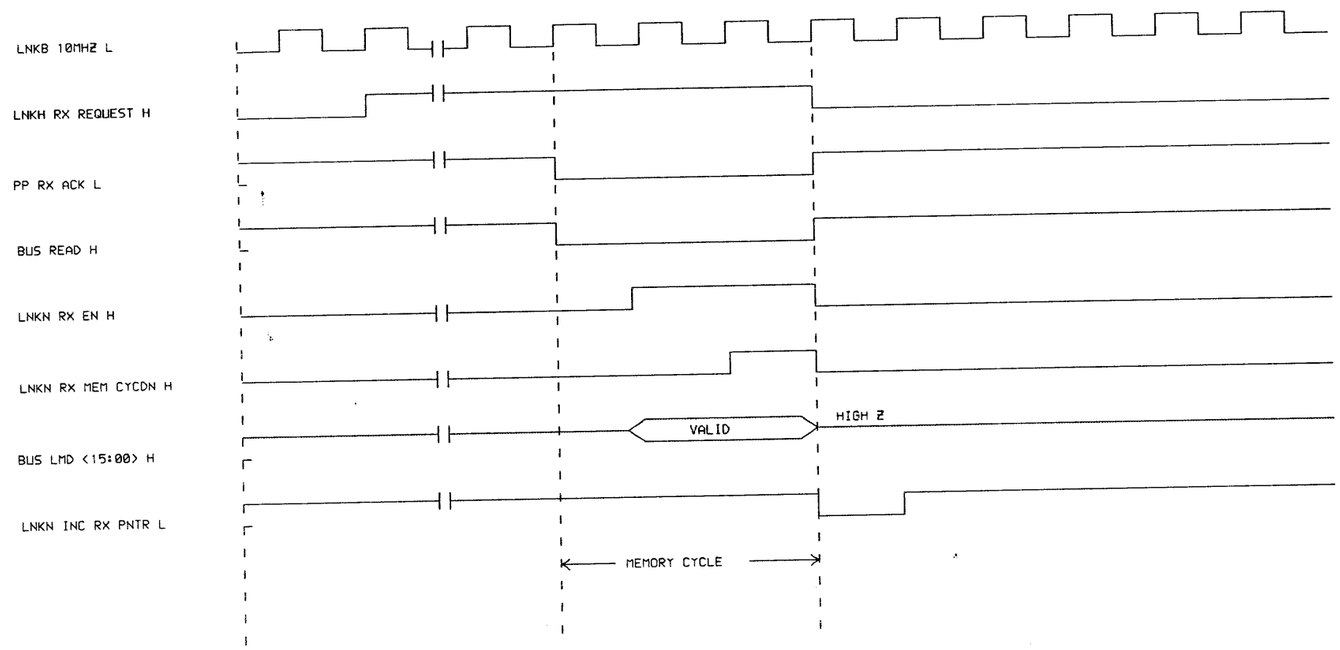

RECEIVE LINK MEMORY BUS TRANSFER - LNKE, LNKH, LNKN

TIMING DIAGRAM-9

REVISIONS		
CHK	CHANGE NO.	REV

digital

DRN. C. GIROUARD" DATE 17-NOV-82 ENG. Neil Bloomberg DATE 17-NOV-82

CHK'D. R. Sargent DATE 17-NOV-82 BOARD LOCATION: SHEET 1 OF 1

DSKD:<SARGENT>LNKTDK.DRW 17-NOV-82 11:02 NEXT HIGHER ASSEMBLY: D-UA-M7793-0-0

FIRST USED ON OPTION/MODEL: DELUNA

TITLE: DELUNA LINK MODULE (LNK)

SIZE	CODE	NUMBER	REV.
K	CS	M7793-0-TDK	A

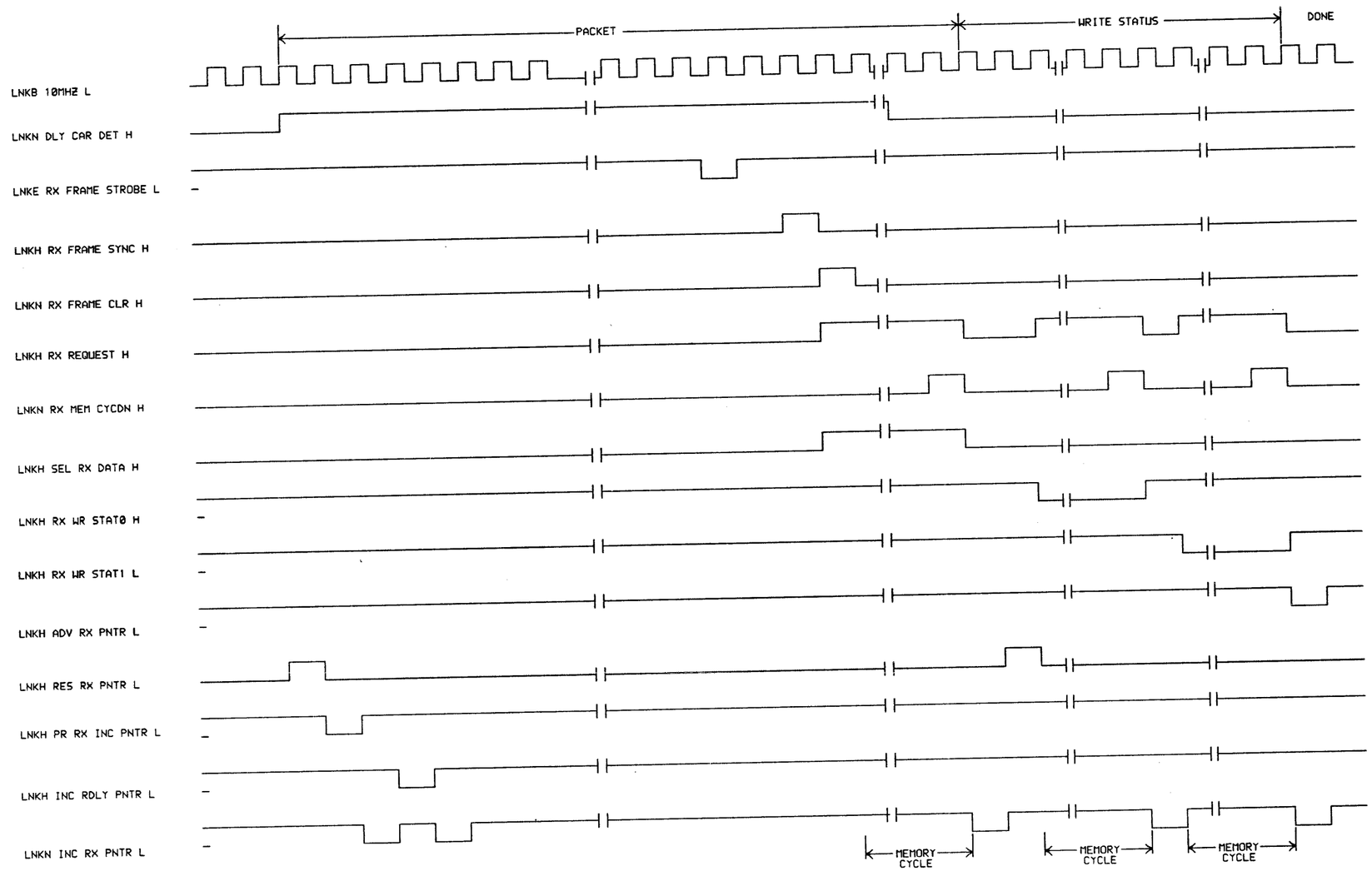

LINK RECEIVE MEMORY BUS TRANSFER-LNKE,LNKH,LNKN

TIMING DIAGRAMS-10

REVISIONS		
CHK	CHANGE NO.	REV

digital

DRN. PAUL HEBERT"	DATE 17-NOV-82	ENG. Neil Bloomberg	DATE 17-NOV-82
CHK: D. Scangent	DATE 17-NOV-82	BOARD LOCATION: SHEET 1 OF 1	
DSKD:<SARGENT>LNKTDL.DRW 17-NOV-82 11:04		NEXT HIGHER ASSEMBLY: D-UA-M7793-0-0	
FIRST USED ON OPTION/MODEL: DELUNA			

TITLE: DELUNA LINK MODULE (LNK)

SIZE	CODE	NUMBER	REV.
K	CS	M7793-0-TDL	A

TW

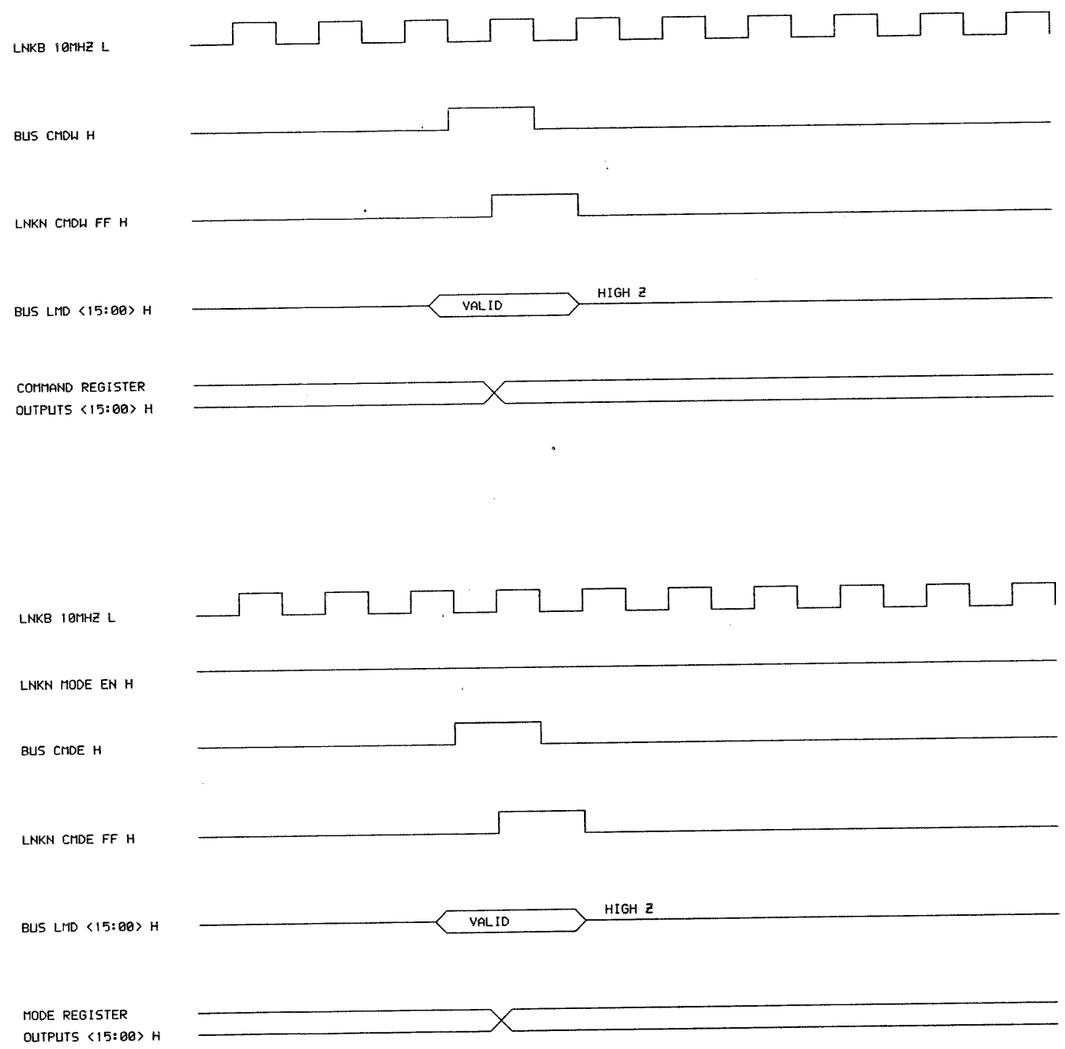

COMMAND REGISTER
WRITE OPERATION

MODE REGISTER
WRITE OPERATION

CONTROL REGISTERS-LNKN

TIMING DIAGRAM-11

REVISIONS		
CHK	CHANGE NO.	REV

DRN. CARLSON	DATE 17-NOV-82	ENG. Neil Bloomberg	DATE 17-NOV-82
CHK'D.	DATE 17-NOV-82	BOARD LOCATION:	
DSKD:<SARGENT>LNKTDM.DRW 17-NOV-82 11:02		SHEET 1 OF 1	
FIRST USED ON OPTION/MODEL: DELUNA		NEXT HIGHER ASSEMBLY: D-UA-M7793-0-0	

TITLE: DELUNA LINK MODULE (LNK)

SIZE	CODE	NUMBER	REV.
K	CS	M7793-0-TDM	A

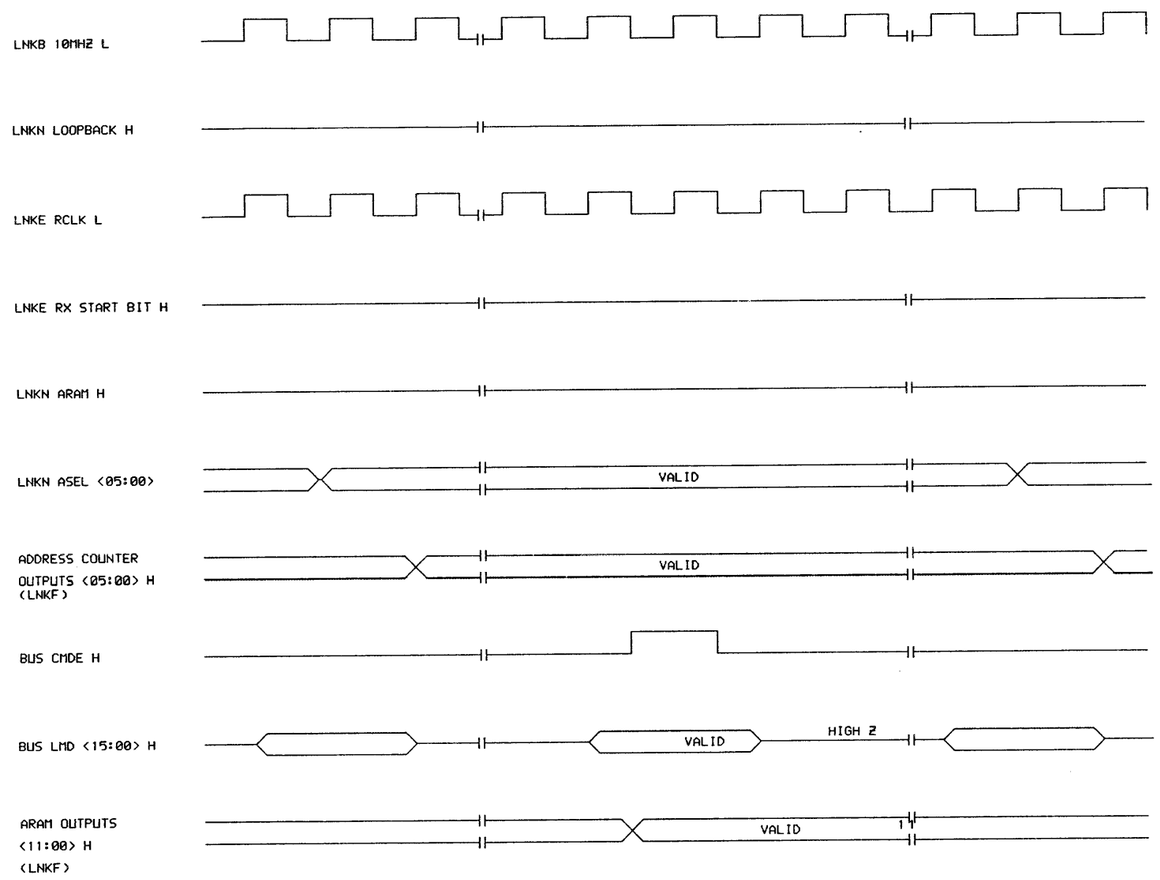

STATION ADDRESS RAM WRITE-LNKF

TIMING DIAGRAM-12

REVISIONS		
CHK	CHANGE NO.	REV

digital

DRN. CARLSON	DATE 17-NOV-82	ENG. Neil Bloomberg	DATE 17-NOV-82
CHKD.	DATE 17-NOV-82	BOARD LOCATION:	
		SHEET 1 OF 1	

DSKD:<SARGENT>LNKTDN.DRW 17-NOV-82 11:02 NEXT HIGHER ASSEMBLY:

FIRST USED ON OPTION/MODEL: DELUNA D-UA-M7793-0-0

TITLE: DELUNA LINK MODULE (LNK)

SIZE	CODE	NUMBER	REV.
K	CS	M7793-0-TDN	A

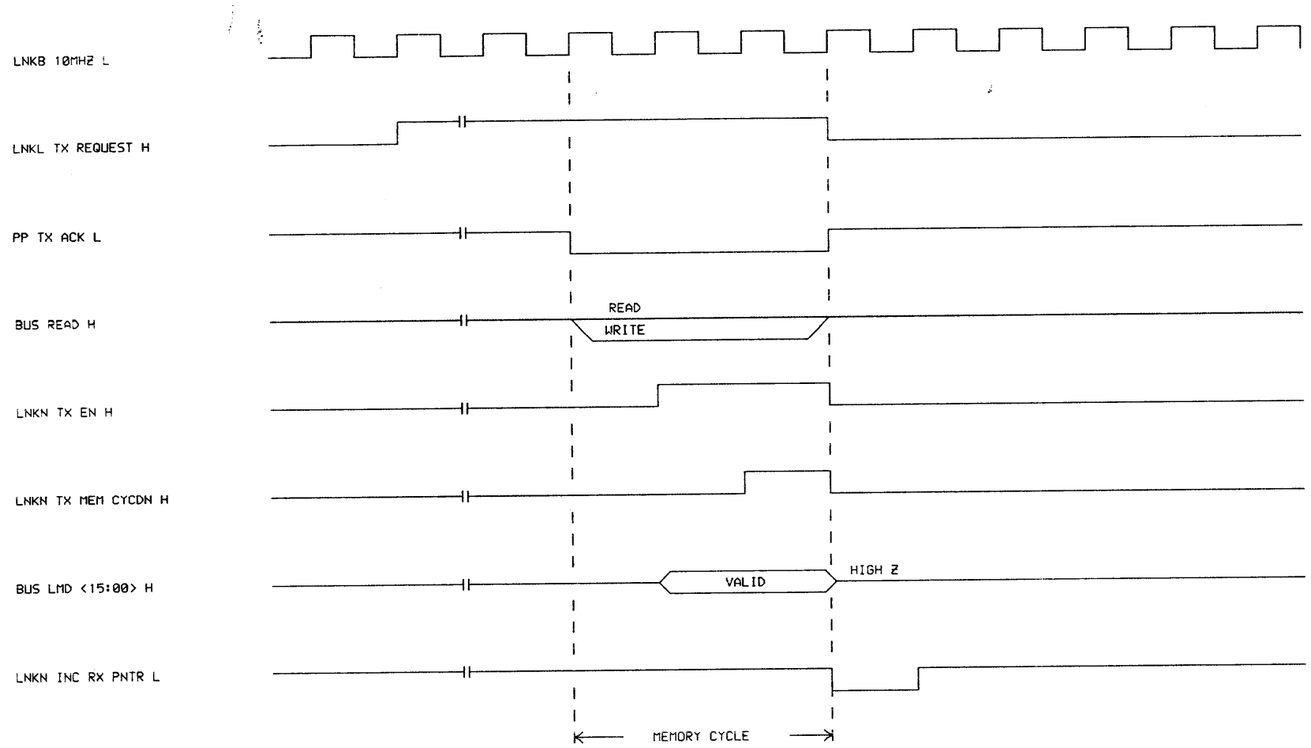

TRANSMIT MEMORY BUS TRANSFER-LNKJ,L,N

TIMING DIAGRAM-13

REVISIONS		
CHK	CHANGE NO.	REV

digital

DSKD:<SARGENT>LNKTDP.DRW 17-NOV-82 11:03

FIRST USED ON OPTION/MODEL: DELNA

DRN. CARLSON	DATE 17-NOV-82	ENG. Nell Bloomberg	DATE 17-NOV-82
CHK'D.	DATE 17-NOV-82	BOARD LOCATION:	
		SHEET 1 OF 1	
		NEXT HIGHER ASSEMBLY: D-UA-M7793-0-0	

TITLE: DELNA LINK MODULE (LNK)

SIZE	CODE	NUMBER	REV.
K	CS	M7793-0-TDP	A

SIZE K CODE CS NUMBER M7793-0-TDP REV. A

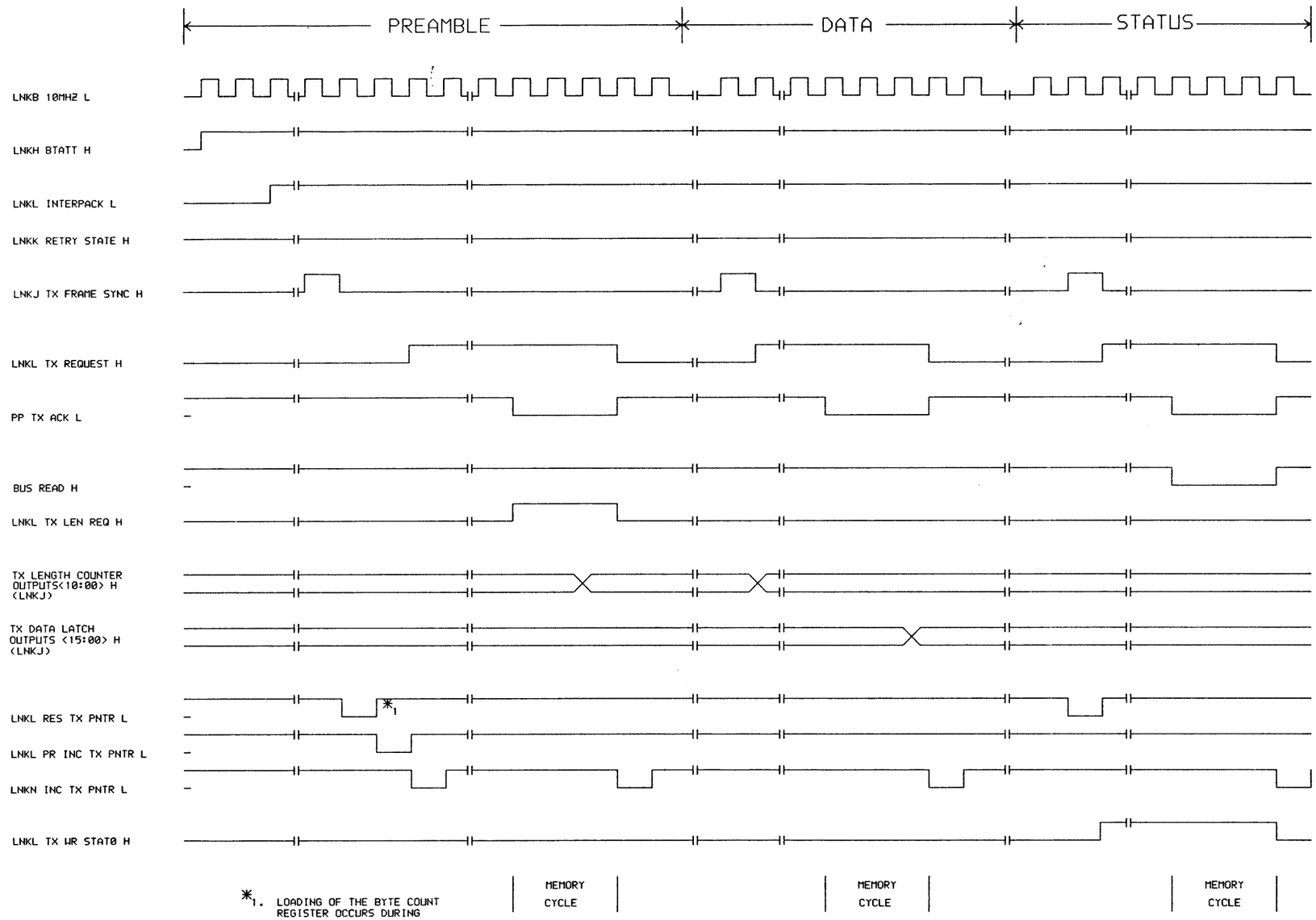

*1. LOADING OF THE BYTE COUNT REGISTER OCCURS DURING THE PREAMBLE 1 STATE.

TRANSMIT LINK MEMORY TRANSFER-LNKJ,LNKL,LNKN

TIMING DIAGRAM-14

REVISIONS		
CHK	CHANGE NO.	REV

DSKD:<SARGENT>LNKTDR.DRW 17-NOV-82 11:05
FIRST USED ON OPTION/MODEL: DELUNA

DRN. CARLSON	DATE 17-NOV-82	ENG. Neil Bloomberg	DATE 17-NOV-82
CHKD.	DATE 17-NOV-82	BOARD LOCATION: SHEET 1 OF 1	
NEXT HIGHER ASSEMBLY: D-UA-M7793-0-0			

TITLE: DELUNA LINK MODULE (LNK)

SIZE	CODE	NUMBER	REV.
K	CS	M7793-0-TDR	A

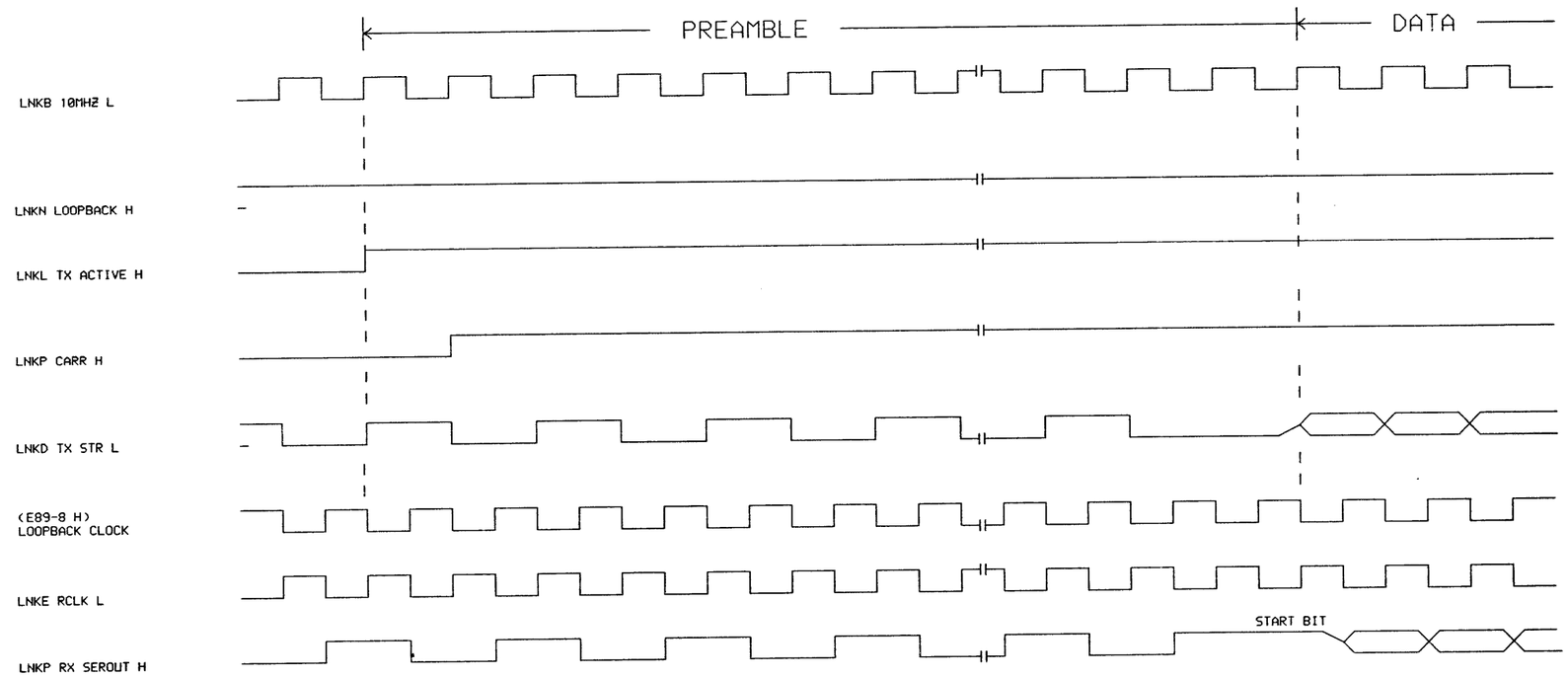

LOOPBACK LNKP,LNKL

TIMING DIAGRAM-15

REVISIONS		
CHK	CHANGE NO.	REV

DRN. CARLSON DATE 17-NOV-82 ENG. Neil Bloomberg DATE 17-NOV-82

CHKD. DATE 17-NOV-82 BOARD LOCATION: SHEET 1 OF 1

DSKD:<SARGENT>LNKTDS.DRW 17-NOV-82 11:03 NEXT HIGHER ASSEMBLY: D-UA-M7793-0-0

FIRST USED ON OPTION/MODEL: DELUNA

TITLE: DELUNA LINK MODULE (LNK)

SIZE	CODE	NUMBER	REV.
K	CS	M7793-0-TDS	A

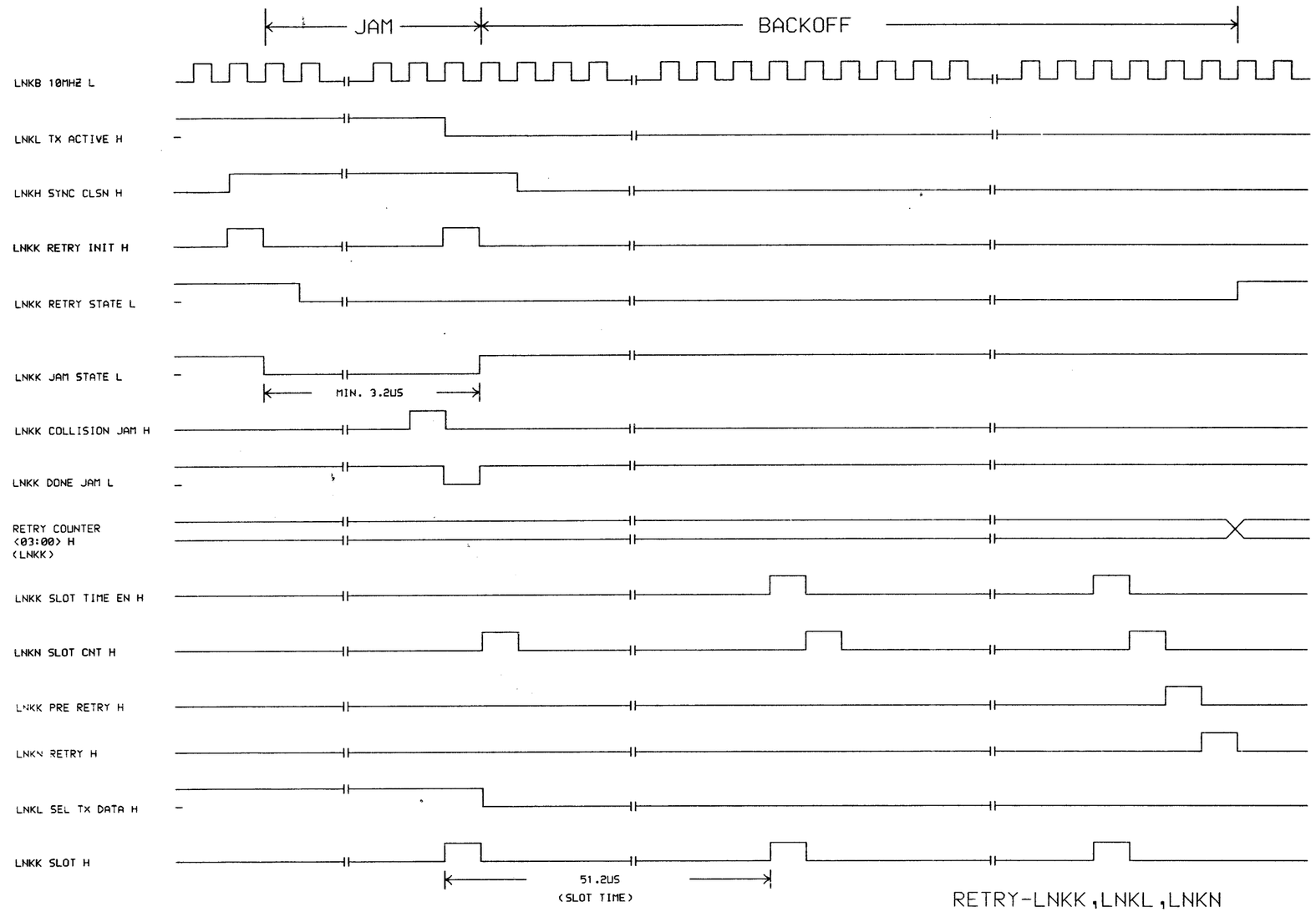

RETRY-LNKK,LNKL,LNKN
JAM AND BACKOFF
TIMING DIAGRAM-16

REVISIONS		
CHK	CHANGE NO.	REV

DRN. CARLSON	DATE 17-NOV-82	ENG. Neil Bloomberg	DATE 17-NOV-82
CHK: D. R. Sargent	DATE 17-NOV-82	BOARD LOCATION: SHEET 1 OF 1	
DSKD:<SARGENT>LNKTDT.DRW 17-NOV-82 11:03		NEXT HIGHER ASSEMBLY: D-UA-M7793-0-0	
FIRST USED ON OPTION/MODEL: DEUNA			

TITLE: DEUNA LINK MODULE (LNK)

SIZE	CODE	NUMBER	REV.
K	CS	M7793-0-TDT	A

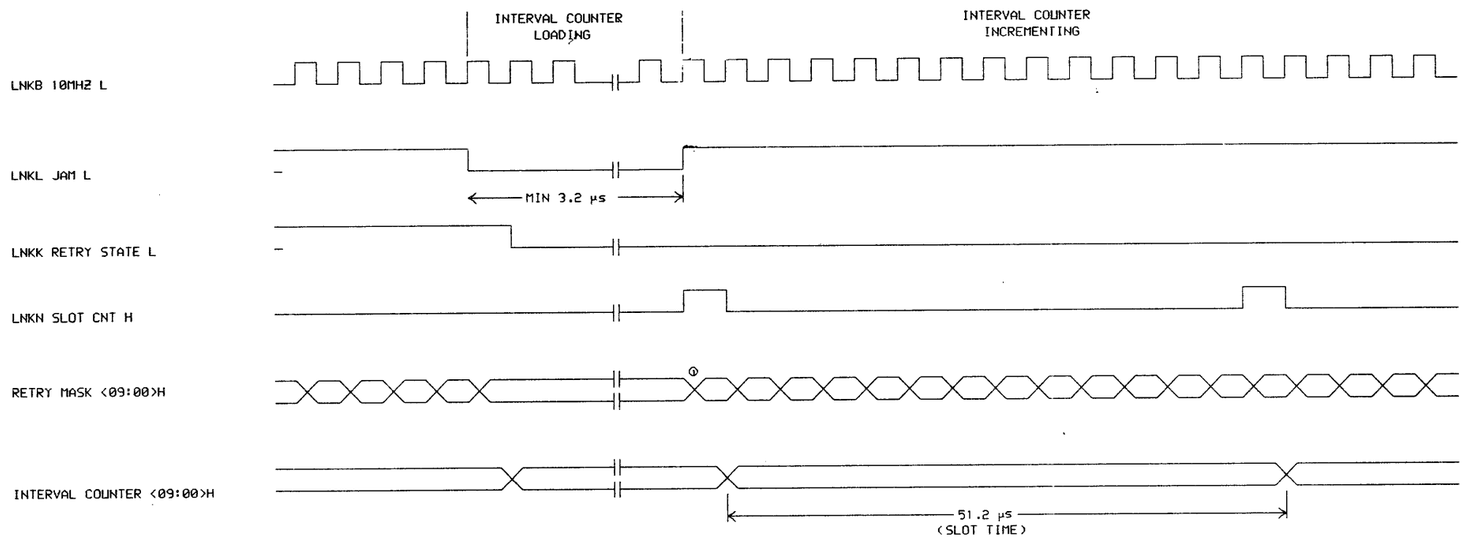

① RETRY MASK <09:00>H IS CLOCK BY LNKL OSC L AND HENCE IS ASYNCHRONIS TO 10MHZ L.

RETRY-LNKK,LNKL
LOADING OF INTERVAL COUNTER
TIMING DIAGRAM-17

REVISIONS		
CHK	CHANGE NO.	REV

DRN. PAUL HEBERT"	DATE 17-NOV-82	ENG. Neil Bloomberg	DATE 17-NOV-82
CHK: D.	DATE 17-NOV-82	BOARD LOCATION:	
		SHEET 1 OF 1	
DSKD:<SARGENT>LNKTDU.DRW 17-NOV-82 11:05		NEXT HIGHER ASSEMBLY:	
FIRST USED ON OPTION/MODEL: DELUNA		D-UA-M7793-0-0	

TITLE: DELUNA LINK MODULE (LNK)

SIZE	CODE	NUMBER	REV.
K	CS	M7793-0-TDU	A

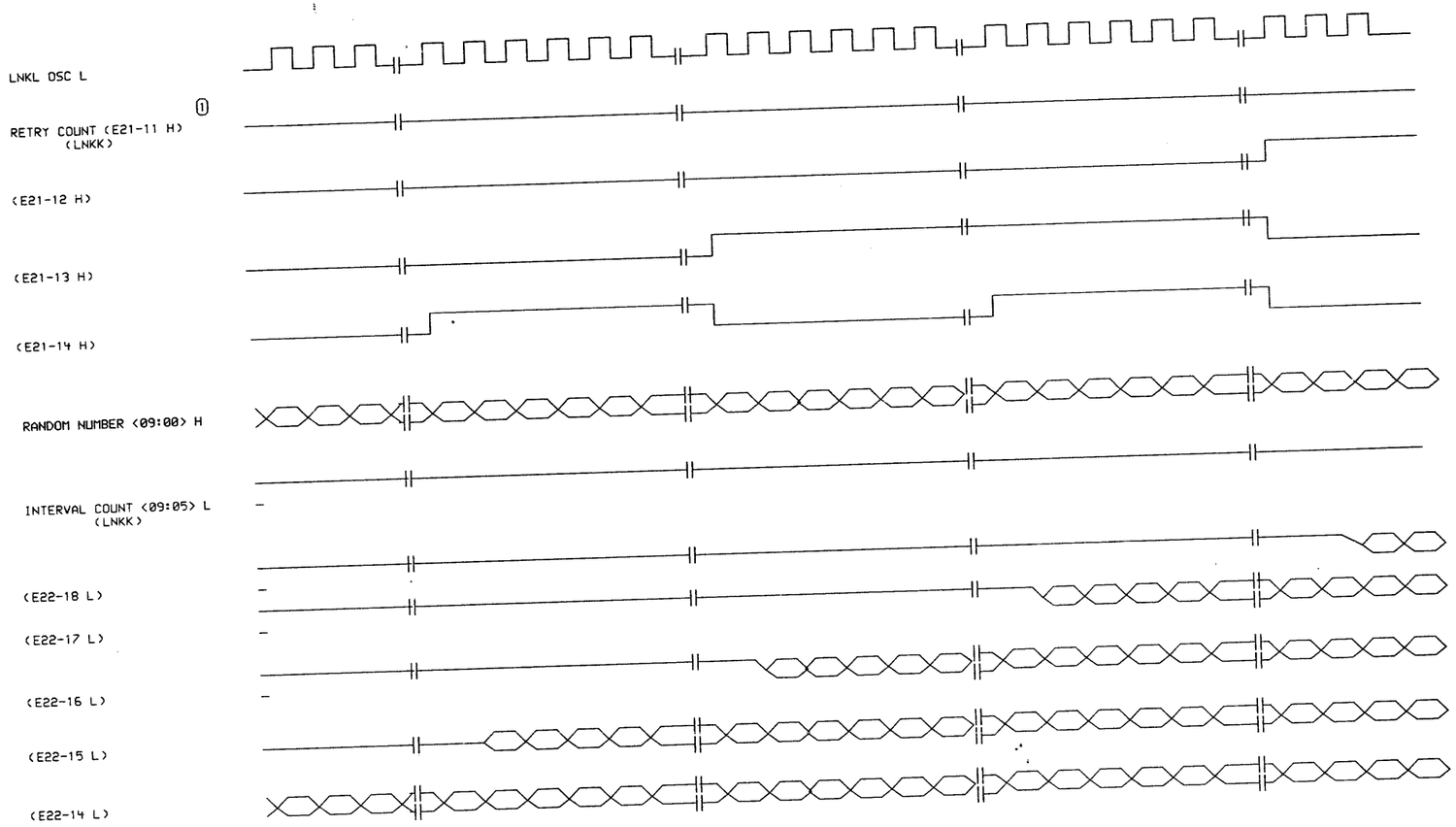

NOTE 1. THIS COUNT IS INCREMENTED AT THE DEASSERTION OF RNKK RETRY STATE L.

RETRY-LNKK,LNKL
RANDOM NUMBER MASK OPENING
TIMING DIAGRAM-18

REVISIONS		
CHK	CHANGE NO.	REV

digital

DRN. C. GIROUARD" DATE 17-NOV-82
CHK. DATE 17-NOV-82
ENG. Neil Bloomberg DATE 17-NOV-82
BOARD LOCATION:
SHEET 1 OF 1
NEXT HIGHER ASSEMBLY: D-UA-M7793-0-0
DSKD:<SARGENT>LNKTDV.DRW117-NOV-82 11:06
FIRST USED ON OPTION/MODEL: DELUNA

TITLE: DELUNA LINK MODULE (LNK)

SIZE	CODE	NUMBER	REV.
K	CS	M7793-0-TDV	A

SIZE K CODE CS NUMBER M7793-0-TDV REV. A

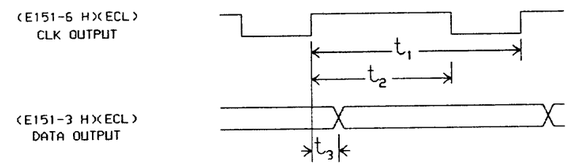

PARAMETER	MIN	TYPE	MAX
t_1	80	100	120
t_2	26	50	70
t_3		2	

MANCHESTER DECODER -

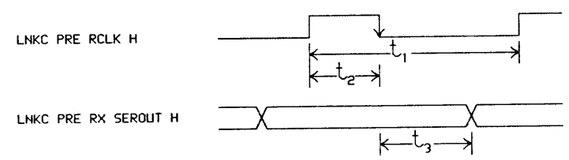

PARAMETER	MIN	TYPE	MAX
t_1	80	100	120
t_2		30	
t_3		50	

CLOCK SHAPER -

RECEIVE CLOCK, DATA OUTPUTS-LNKC

TIMING DIAGRAMS-19

REVISIONS		
CHK	CHANGE NO.	REV

DRN. PAUL HEBERT" DATE 17-NOV-82 ENG. Neil Bloomberg DATE 17-NOV-82

CHK: D. DATE 17-NOV-82 BOARD LOCATION: SHEET 1 OF 1

DSKD:<SARGENT>LNKTDW.DRW 17-NOV-82 11:03 NEXT HIGHER ASSEMBLY: D-UA-M7793-0-0

FIRST USED ON OPTION/MODEL: DELUNA

TITLE: DELUNA LINK MODULE (LNK)

SIZE	CODE	NUMBER	REV.
K	CS	M7793-0-TDW	A

PART NUMBER: 23-031K5-00

LOCATION: E92

DEVICE TYPE: PAL16R8.
PIN NUMBER = SYMBOL TABLE:

1= CLK	8= Sync Carr L	15= Carr Sta L
2= CLSN H	9= TC L	16= Q0 L
3= Tx Act H	10= GND	17= Q1 L
4= Init H	11= EN	18= 4.8US BLK L
5= En Cerr H	12= CERR L	19= Int Pack L
6= GND H	13= Tx Area L	20= VCC
7= GND H	14= Det Clsn L	

NOTES: CERR1.PAL - (LNKL)

This program is the memory contents of the PAL logic used to detect heart beat. In addition this PAL is also used to form the upper 3 bits of the interpacket gap timer.

```
          |0|0|0|0|0|0|0|0|1|1|1|1|1|1|1|1|1|1|
PAL PINS: |2|3|4|5|6|7|8|9|2|3|4|5|6|7|8|9|

OUTPIN 19 X X L X X X X X L X X X L L H L X 4.8US BLK L * /Q1 L * Q0 L * TC L * Carr Sta L * /Init H
          X X L X X X H X X X X X X X X L Int Pack L * /Sync Carr L * /Init H

OUTPIN 18 X X X X X X X X X X X L X H L X 4.8US BLK L * /Q1 L * Carr Sta L
          X X X X X X X X X X X L H X L X 4.8US BLK L * /Q0 L * Carr Sta L
          X X X X X X X H X X X L X X L X 4.8US BLK L * /TC L * Carr Sta L
          X X X X X X X L X X X L L L H X /4.8US BLK L * Q1 L * Q0 L * TC L * Carr Sta L
          X X X X X X H X X X X X X X L L 4.8US BLK L * Int Pack L * /Sync Carr L

OUTPIN 17 X X X X X X X X X X X L H L X X Q1 L * /Q0 L * Carr Sta L
          X X X X X X X H X X X L X L X X Q1 L * /TC L * Carr Sta L
          X X X X X X X L X X X L L H X X /Q1 L * Q0 L * TC L * Carr Sta L
          X X X X X X H X X X X X X L X L Q1 L * Int Pack L * /Sync Carr L

OUTPIN 16 X X X X X X X H X X X L L X X X Q0 L * /TC L * Carr Sta L
          X X X X X X X L X X X L H X X X /Q0 L * TC L * Carr Sta L
          X X X X X X H X X X X X L X X L Q0 L * Int Pack L * /Sync Carr L

OUTPIN 15 X L L X X X H X X L X X X X X X /Sync Carr L * /Tx Act H * Tx Area L * /Init H
          X X L X X X X X X L X L X X X H Carr Sta L * Tx Area L * /Int Pack L * /Init H
          X L L X X X H X X H X X X H H X /Sync Carr L * /Tx Act H * /Tx Area L * /4.8US BLK L * /Q1 L * /Init H
          X X L X X X X X X H X L X X L H Carr Sta L * 4.8US BLK L * /Tx Area L * /Int Pack L * /Init H
          X X L X X X X X X H X L X L X H Carr Sta L * Q1 L * /Tx Area L * /Int Pack L * /Init H

OUTPIN 14 H X L X X X X X X X X X X X X H CLSN H * /Int Pack L * /Init H
          X X L X X X X X X X L X X X X H Det Clsn L * /Int Pack L * /Init H

OUTPIN 13 X H L X X X X X X X X X X X X H Tx Act H * /Int Pack L * /Init H
          X X L X X X X X X L X X X X X H Tx Area L * /Int Pack L * /Init H

OUTPIN 12 X X L H X X X X X L H X X X X L Tx Area L * /Det Clsn L * Int Pack L * /Init H * En Cerr H
```


REVISIONS		
CHK	CHANGE NO.	REV

digital

DRN: K. Sargent DATE 10-NOV-82
CHK'D: Ken Sargent DATE 10-NOV-82
ENG: Neil Bloomberg DATE 10-NOV-82
BOARD LOCATION:
SHEET 1 OF 1
DSK:LNKTTA.T2PL[4,27] 10-NOV-82 13:59
NEXT HIGHER ASSEMBLY: D-UA-M7793-0-0
FIRST USED ON OPTION/MODEL: DEUNA

TITLE: DEUNA LINK MODULE PAL LISTINGS

SIZE	CODE	NUMBER	REV.
K	CS	M7793-0-TTA	A

PART NUMBER: 23-030K5-00

LOCATION: E56, E70

DEVICE TYPE: PAL16R8
PIN NUMBER = SYMBOL TABLE:

1= CLK	8= SEL1 H	15= A4 L
2= CLR L	9= SEL0 H	16= A3 L
3= IN H	10= GND	17= A2 L
4= A n L	11= EN	18= A1 L
5= Shift L	12= A7 L	19= A0 L
6= A31 L	13= A6 L	20= VCC
7= GND H	14= A5 L	

NOTES: CRCHI.PAL - (LNKD)

THIS PROGRAM IS USED TO PERFOM A 32-BIT CRC
FUNCTION USING THE AUTODIN II POYINOMIAL.
The following table is used to determine the CRC equation used:

SEL1	SEL0	Equation	
0	0	Polynomials A31 to A24	=X**32 + X**26
0	1	Polynomials A23 to A16	=X**23 + X**22 + X**16
1	0	Polynomials A15 to A08	=X**12 + X**11 + X**10 + X**8
1	1	Polynomials A07 to A00	=X**7 + X**5 + X**4 + X**2 +X + 1

```
PAL PINS:  |0|0|0|0|0|0|0|0|1|1|1|1|1|1|1|1|1|1|
           |2|3|4|5|6|7|8|9|2|3|4|5|6|7|8|9|

OUTPIN 19  X L X L L X X H X X X X X X X X /IN H * A31 L * Shift L * SEL0 H
           X H X L H X X H X X X X X X X X IN H * /A31 L * Shift L * SEL0 H
           X L H L L X X L X X X X X X X X /A n L * /IN H * A31 L * Shift L * /SEL0 H
           X H L L L X X L X X X X X X X X A n L * IN H * A31 L * Shift L * /SEL0 H
           X H L H X X L X X X X X X X X /A n L * IN H * /A31 L * Shift L * /SEL0 H
           X L L H X X L X X X X X X X X A n L * /IN H * /A31 L * Shift L * /SEL0 H
           X X L H X X X X X X X X X X X A n L * /Shift L
           L X X X X X X X X X X X X X X CLR L

OUTPIN 18  X L X L L X X H X X X X X X X H /A0 L * /IN H * A31 L * Shift L * SEL0 H
           X H X L L X X H X X X X X X X L A0 L * IN H * A31 L * Shift L * SEL0 H
           X H X L H X X H X X X X X X X H /A0 L * IN H * /A31 L * Shift L * SEL0 H
           X L X L H X X H X X X X X X X L A0 L * /IN H * /A31 L * Shift L * SEL0 H
           X X X L X X X L X X X X X X X L A0 L * Shift L * /SEL0 H
           X X X H X X X X X X X X X X X L A0 L * /Shift L
           L X X X X X X X X X X X X X X CLR L

OUTPIN 17  X L X L L X X X X X X X X X H X /A1 L * /IN H * A31 L * Shift L
           X H X L L X X X X X X X X X L X A1 L * IN H * A31 L * Shift L
           X H X L H X X X X X X X X X H X /A1 L * IN H * /A31 L * Shift L
           X L X L H X X X X X X X X X L X A1 L * /IN H * /A31 L * Shift L
           X X X H X X X X X X X X X X L X A1 L * /Shift L
           L X X X X X X X X X X X X X X CLR L

OUTPIN 16  X X X L X X X H X X X X X L X X A2 L * Shift L * SEL0 H
           X L X L L X X L X X X X X H X X /A2 L * /IN H * A31 L * Shift L * /SEL0 H
           X H X L L X X L X X X X X L X X A2 L * IN H * A31 L * Shift L * /SEL0 H
           X H X L H X X L X X X X X H X X /A2 L * IN H * /A31 L * Shift L * /SEL0 H
           X L X L H X X L X X X X X L X X A2 L * /IN H * /A31 L * Shift L * /SEL0 H
           X X X H X X X X X X X X X L X X A2 L * /Shift L
           L X X X X X X X X X X X X X X CLR L

OUTPIN 15  X L X L L X X X X X X X H X X X /A3 L * /IN H * A31 L * Shift L
           X H X L L X X X X X X X L X X X A3 L * IN H * A31 L * Shift L
           X H X L H X X X X X X X H X X X /A3 L * IN H * /A31 L * Shift L
           X L X L H X X X X X X X L X X X A3 L * /IN H * /A31 L * Shift L
           X X X H X X X X X X X X L X X X A3 L * /Shift L
           L X X X X X X X X X X X X X X CLR L

OUTPIN 14  X L X L L X X H X X X H X X X X /A4 L * /IN H * A31 L * Shift L * SEL0 H
           X H X L L X X H X X X L X X X X A4 L * IN H * A31 L * Shift L * SEL0 H
           X H X L H X X H X X X H X X X X /A4 L * IN H * /A31 L * Shift L * SEL0 H
           X L X L H X X H X X X L X X X X A4 L * /IN H * /A31 L * Shift L * SEL0 H
           X X X L X X X L X X X L X X X X A4 L * Shift L * /SEL0 H
           X X X H X X X X X X X L X X X X A4 L * /Shift L
           L X X X X X X X X X X X X X X CLR L

OUTPIN 13  X X X L X X X X X X X L X X X X A5 L * Shift L
           X X X H X X X X X X X L X X X X A5 L * /Shift L
           L X X X X X X X X X X X X X X CLR L

OUTPIN 12  X L X L L X X H X H X X X X X /A6 L * /IN H * A31 L * Shift L * SEL0 H
           X H X L L X X H X L X X X X X A6 L * IN H * A31 L * Shift L * SEL0 H
           X H X L H X X H X H X X X X X /A6 L * IN H * /A31 L * Shift L * SEL0 H
           X L X L H X X H X L X X X X X A6 L * /IN H * /A31 L * Shift L * SEL0 H
           X X X L X X X L X L X X X X X A6 L * Shift L * /SEL0 H
           X X X H X X X X X L X X X X X A6 L * /Shift L
           L X X X X X X X X X X X X X X CLR L
```


REVISIONS		
CHK	CHANGE NO.	REV

digital

DRN: Neil Bloomberg | DATE 08-NOV-82 | ENG. Neil Bloomberg | DATE 08-NOV-82
CHK'D. Ken Sargent | DATE 08-NOV-82 | BOARD LOCATION: SHEET 1 OF 1
DSK:LNKTTB.T2P[4,27] 08-NOV-82 16:14 | NEXT HIGHER ASSEMBLY: D-UA-M7793-0-0
FIRST USED ON OPTION/MODEL: DELUNA

TITLE: DELUNA LINK MODULE PAL LISTINGS

SIZE	CODE	NUMBER	REV.
K	CS	M7793-0-TTB	A

SIZE K | CODE CS | NUMBER M7793-0-TTB | REV. A

PART NUMBER: 23-033K5-00

LOCATION: E84, E85

DEVICE TYPE: PAL16R8
PIN NUMBER = SYMBOL TABLE:

1= CLK	8= SEL1 H	15= A4 L
2= CLR L	9= SEL0 H	16= A3 L
3= IN H	10= GND	17= A2 L
4= A n L	11= EN	18= A1 L
5= Shift L	12= A7 L	19= A0 L
6= A31 L	13= A6 L	20= VCC
7= GND H	14= A5 L	

NOTES: CRCLO.PAL - (LNKD)

THIS PROGRAM IS USED TO PERFOM A 32-BIT CRC
FUNCTION USING THE AUTODIN II POYINOMIAL.
The following table is used to determine the CRC equation used:

SEL1	SEL0	Equation	
0	0	Polynomials A31 to A24	=X**32 + X**26
0	1	Polynomials A23 to A16	=X**23 + X**22 + X**16
1	0	Polynomials A15 to A08	=X**12 + X**11 + X**10 + X**8
1	1	Polynomials A07 to A00	=X**7 + X**5 + X**4 + X**2 + X + 1

```
          |0|0|0|0|0|0|0|0|1|1|1|1|1|1|1|1|1|1|
PAL PINS: |2|3|4|5|6|7|8|9|2|3|4|5|6|7|8|9|
OUTPIN 19 X L H L L X X H X X X X X X X X /A n L * /IN H * A31 L * Shift L * SEL0 H
          X H L L L X X H X X X X X X X X A n L * IN H * A31 L * Shift L * SEL0 H
          X H H L H X X H X X X X X X X X /A n L * IN H * /A31 L * Shift L * SEL0 H
          X L L L H X X H X X X X X X X X A n L * /IN H * /A31 L * Shift L * SEL0 H
          X X L L X X X L X X X X X X X X A n L * Shift L * /SEL0 H
          X X L H X X X X X X X X X X X X A n L * /Shift L
          L X X X X X X X X X X X X X X X CLR L

OUTPIN 18 X X X L X X X X X X X X X X X L A0 L * Shift L
          X X X H X X X X X X X X X X X L A0 L * /Shift L
          L X X X X X X X X X X X X X X X CLR L

OUTPIN 17 X X X L X X X H X X X X X X L X A1 L * Shift L * SEL0 H
          X L X L L X X L X X X X X X H X /A1 L * /IN H * A31 L * Shift L * /SEL0 H
          X H X L L X X L X X X X X X L X A1 L * IN H * A31 L * Shift L * /SEL0 H
          X H X L H X X L X X X X X X H X /A1 L * IN H * /A31 L * Shift L * /SEL0 H
          X L X L H X X L X X X X X X L X A1 L * /IN H * /A31 L * Shift L * /SEL0 H
          X X X H X X X X X X X X X X L X A1 L * /Shift L
          L X X X X X X X X X X X X X X X CLR L

OUTPIN 16 X X X L X X X X X X X X X L X X A2 L * Shift L
          X X X H X X X X X X X X X L X X A2 L * /Shift L
          L X X X X X X X X X X X X X X X CLR L

OUTPIN 15 X X X L X X X X X X X X L X X X A3 L * Shift L
          X X X H X X X X X X X X L X X X A3 L * /Shift L
          L X X X X X X X X X X X X X X X CLR L

OUTPIN 14 X X X L X X X X X X X X L X X X X A4 L * Shift L
          X X X H X X X X X X X X L X X X X A4 L * /Shift L
          L X X X X X X X X X X X X X X X CLR L

OUTPIN 13 X L X L L X X H X X H X X X X X /A5 L * /IN H * A31 L * Shift L * SEL0 H
          X H X L L X X H X X L X X X X X A5 L * IN H * A31 L * Shift L * SEL0 H
          X H X L H X X H X X H X X X X X /A5 L * IN H * /A31 L * Shift L * SEL0 H
          X L X L H X X H X X L X X X X X A5 L * /IN H * /A31 L * Shift L * SEL0 H
          X X X L X X X L X X L X X X X X A5 L * Shift L * /SEL0 H
          X X X H X X X X X X L X X X X X A5 L * /Shift L
          L X X X X X X X X X X X X X X X CLR L

OUTPIN 12 X L X L L X X H X H X X X X X /A6 L * /IN H * A31 L * Shift L * SEL0 H
          X H X L L X X H X L X X X X X A6 L * IN H * A31 L * Shift L * SEL0 H
          X H X L H X X H X H X X X X X /A6 L * IN H * /A31 L * Shift L * SEL0 H
          X L X L H X X H X L X X X X X A6 L * /IN H * /A31 L * Shift L * SEL0 H
          X X X L X X X L X L X X X X X A6 L * Shift L * /SEL0 H
          X X X H X X X X X L X X X X X A6 L * /Shift L
          L X X X X X X X X X X X X X X X CLR L
```


REVISIONS		
CHK	CHANGE NO.	REV

digital

DSK:LNKTTC.T2P[4,27] 08-NOV-82 16:14
FIRST USED ON OPTION/MODEL: DEUNA

DRN: Neil Bloomberg
CHK: D. Ken Sargent

	DATE		DATE
ENG.	08-NOV-82	Neil Bloomberg	08-NOV-82
BOARD LOCATION:	08-NOV-82	SHEET 1 OF 1	

NEXT HIGHER ASSEMBLY: D-UA-M7793-0-0

TITLE: DEUNA LINK MODULE PAL LISTINGS

SIZE	CODE	NUMBER	REV.
K	CS	M7793-0-TTC	A

PART NUMBER: 23-034K4-00

LOCATION: E50

DEVICE TYPE: PAL16R6
PIN NUMBER = SYMBOL TABLE:

1= CLK	8= Clsn H	15= Pre LCOL L
2= RTRY H	9= Pream2 State L	16= LCOL L
3= Tx Ena H	10= GND	17= Jam Sta L
4= Tx Act H	11= EN	18= Retry Sta L
5= Done Jam L	12= Retry H	19= Retry Init L
6= Slottim En H	13= Pre LCAR L	20= VCC
7= Carr H	14= LCAR L	

NOTES: RETRY.PAL - (LNKK)

This program is the memory contents of the PAL logic used to form the Retry Logic state machine. The Retry Logic State Machine is used to implement the Retry algorithm specified in the Ethernet Specification. This PAL is also used to detect LCOL and LCAR.

```
          |0|0|0|0|0|0|0|0|1|1|1|1|1|1|1|1|1|1|
PAL PINS: |2|3|4|5|6|7|8|9|2|3|4|5|6|7|8|9|

OUTPIN 19 X X X X X X X X X X X X X X X X X VCC
          X H X X X X X X X X X X X X X X X Tx Ena H
          X X X X X X H X X X X X X H H X Clsn H * /Jam Sta L * /Retry Sta L
          X L X L X X X X X X X X X X X X Done Jam L * /Tx Ena H

OUTPIN 18 X L X X X X X X X X X X X L X X Jam Sta L * /Tx Ena H
          L L X X X X X X L X X X X X L X Retry Sta L * /RTRY H * /Retry L * /Tx Ena H

OUTPIN 17 X X H H X X H X X X X X X X H X Clsn H * /Done Jam L * Tx Act H * /Retry Sta L
          X X H H X X X X X X X X X L X X Jam Sta L * /Done Jam L * Tx Act H

OUTPIN 16 X L H X X X H X X X X L X X X X Pre LCOL L * Clsn H * Tx Act H * /Tx Ena H
          X L X X X X X X X X X X L X X X LCOL L * /Tx Ena H

OUTPIN 15 X L H X H X X X X X X X X X X X Slottim En H * Tx Act H * /Tx Ena H
          X L H X X X X X X X X L X X X X Pre LCOL L * Tx Act H * /Tx Ena H

OUTPIN 14 X L H X X L X X X L X X X X H X /Carr H * Pre LCAR L * Tx Act H * /Retry Sta L * /Tx Ena H
          X L L X X X X X X H X L X X H X /Pre LCAR L * /Tx Act H * Pre LCOL L * /Retry Sta L * /Tx Ena H
          X L H X X X X X X X L X X X H X LCAR L * /Retry Sta L * Tx Act H * /Tx Ena H
          X L L X X X X X X X L X X X X X LCAR L * /Tx Act H * /Tx Ena H

OUTPIN 13 X L H X X H X X X X X X X X H X Carr H * /Retry Sta L * Tx Act H * /Tx Ena H
          X L H X X X X X X L X X X X H X Pre LCAR L * /Retry Sta L * Tx Act H * /Tx Ena H
          X L L X X X X X X L X X X X X X Pre LCAR L * /Tx Act H * /Tx Ena H

OUTPIN 12
```


REVISIONS		
CHK	CHANGE NO.	REV

DRN: Ken Sargent — DATE 08-NOV-82
CHK: D. Ken Sargent — DATE 08-NOV-82
ENG. Neil Bloomberg — DATE 08-NOV-82
BOARD LOCATION:
SHEET 1 OF 1
DSK:LNKTID.T2P[4,27] 08-NOV-82 16:14
NEXT HIGHER ASSEMBLY:
FIRST USED ON OPTION/MODEL: DEUNA
D-UA-M7793-0-0

TITLE: DEUNA LINK MODULE PAL LISTINGS

SIZE	CODE	NUMBER	REV.
K	CS	M7793-0-TTD	A

PART NUMBER: 23-035K4-00

LOCATION: E22

DEVICE TYPE: PAL16R6
PIN NUMBER = SYMBOL TABLE:

1= CLK	8= SEL2 H	15= RMD1 L
2= RAN3 H	9= SEL3 H	16= RMD2 L
3= RAN2 H	10= GND	17= RMD3 L
4= RAN1 H	11= EN	18= RMD4 L
5= RAN0 H	12= Load L	19= RAN4 H
6= SEL0 H	13= ONE L	20= VCC
7= SEL1 H	14= RMD0 L	

NOTES: RNMS1.PAL - (LNKK)
This program implements the random number mask function specified in the Ethernet spec.

```
PAL PINS:  |0|0|0|0|0|0|0|0|1|1|1|1|1|1|1|1|1|1|
           |2|3|4|5|6|7|8|9|2|3|4|5|6|7|8|9|

OUTPIN 19

OUTPIN 18  X X X X X X X H L X X X X X X H SEL3 H * RAN4 H * Load L
           X X X X X X H X L X X X X X X H SEL2 H * RAN4 H * Load L
           X X X X X X X X H X X X X X L X RMD4 L * /Load L

OUTPIN 17  H X X X X X X H L X X X X X X X SEL3 H * RAN3 H * Load L
           H X X X X X H X L X X X X X X X SEL2 H * RAN3 H * Load L
           H X X X H H X X L X X X X X X X SEL0 H * SEL1 H * RAN3 H * Load L
           X X X X X X X H X X X X L X X RMD3 L * /Load L

OUTPIN 16  X H X X X H X X L X X X X X X X SEL1 H * RAN2 H * Load L
           X H X X X X H X L X X X X X X X SEL2 H * RAN2 H * Load L
           X H X X X X X H L X X X X X X X SEL3 H * RAN2 H * Load L
           X X X X X X X X H X X X L X X X RMD2 L * /Load L

OUTPIN 15  X X H X H X X X L X X X X X X X SEL0 H * RAN1 H * Load L
           X X H X X H X X L X X X X X X X SEL1 H * RAN1 H * Load L
           X X H X X X H X L X X X X X X X SEL2 H * RAN1 H * Load L
           X X H X X X X H L X X X X X X X SEL3 H * RAN1 H * Load L
           X X X X X X X X H X X L X X X X RMD1 L * /Load L

OUTPIN 14  X X X H X X X X L X X X X X X X RAN0 H * Load L
           X X X X X X X X H X L X X X X X RMD0 L * /Load L

OUTPIN 13  X X X X H L L L X X X X X X X X /SEL3 H * /SEL2 H * /SEL1 H * SEL0 H

OUTPIN 12
```


REVISIONS		
CHK	CHANGE NO.	REV

digital

DSK:LNK1TE.T2P[4,27] 08-NOV-82 16:14

DRN.	DATE 08-NOV-82	ENG. Neil Bloomberg	DATE 08-NOV-82
CHK'D. Ken Sargent	DATE 08-NOV-82	BOARD LOCATION: SHEET 1 OF 1	
FIRST USED ON OPTION/MODEL: DEUNA		NEXT HIGHER ASSEMBLY: D-UA-M7793-0-0	

TITLE: DEUNA LINK MODULE PAL LISTINGS

SIZE	CODE	NUMBER	REV.
K	CS	M7793-0-TTE	A

PART NUMBER: 23-036K4-00

LOCATION: E23

DEVICE TYPE: PAL16R6
PIN NUMBER = SYMBOL TABLE:

1= CLK	8= SEL2 H	15= RMD6 L
2= RAN8 H	9= SEL3 H	16= RMD7 L
3= RAN7 H	10= GND	17= RMD8 L
4= RAN6 H	11= EN	18= RMD9 L
5= RAN5 H	12= Load L	19= RAN9 H
6= SEL0 H	13= MORE L	20= VCC
7= SEL1 H	14= RMD5 L	

NOTES: RNMS2.PAL - (LNKK)
This program implements the Random number mask function specified in the Ethernet spec.

```
PAL PINS:  |0|0|0|0|0|0|0|0|1|1|1|1|1|1|1|1|1|1|
           |2|3|4|5|6|7|8|9|2|3|4|5|6|7|8|9|

OUTPIN 19

OUTPIN 18  X X X X X X X H H L X X X X X X H SEL3 H * SEL2 H * RAN9 H * Load L
           X X X X X H X H L X X X X X X H SEL3 H * SEL1 H * RAN9 H * Load L
           X X X X H X X H L X X X X X X H SEL3 H * SEL0 H * RAN9 H * Load L
           X X X X X X X X H X X X X X L X RMD9 L * /Load L

OUTPIN 17  H X X X X X X H L X X X X X X X SEL3 H * RAN8 H * Load L
           X X X X X X X X H X X X L X X RMD8 L * /Load L

OUTPIN 16  X H X X X X X H L X X X X X X X SEL3 H * RAN7 H * Load L
           X H X X H H H X L X X X X X X SEL2 H * SEL1 H * SEL0 H * RAN7 H * Load L
           X X X X X X X X H X X X L X X RMD7 L * /Load L

OUTPIN 15  X X H X X X X H L X X X X X X SEL3 H * RAN6 H * Load L
           X X H X X H H X L X X X X X X SEL2 H * SEL1 H * RAN6 H * Load L
           X X X X X X X X H X X L X X RMD6 L * /Load L

OUTPIN 14  X X X H X X X H L X X X X X X SEL3 H * RAN5 H * Load L
           X X X H H X H X L X X X X X X SEL2 H * SEL0 H * RAN5 H * Load L
           X X X H X H H X L X X X X X X SEL2 H * SEL1 H * RAN5 H * Load L
           X X X X X X X X H X L X X X X RMD5 L * /Load L

OUTPIN 13  X X X X X X X H X X X X X X X SEL3 H
           X X X X X X H X X X X X X X X SEL2 H
           X X X X X H X X X X X X X X X SEL1 H

OUTPIN 12
```


REVISIONS		
CHK	CHANGE NO.	REV

DRN: Ken Sargent | DATE 08-NOV-82 | ENG. Neil Bloomberg | DATE 08-NOV-82
CHK'D. Ken Sargent | DATE 08-NOV-82 | BOARD LOCATION:
SHEET 1 OF 1
DSK:LNKTIF.I2PL[4,22] 08-NOV-82 16:14
FIRST USED ON OPTION/MODEL: DELNA
NEXT HIGHER ASSEMBLY: D-UA-M7793-0-0

TITLE: DELNA LINK MODULE PAL LISTINGS

SIZE	CODE	NUMBER	REV.
K	CS	M7793-0-TF	A

SIZE	CODE	NUMBER	REV.
K	CS	M7793-0-TF	A

PART NUMBER: 23-028K5-00

LOCATION: E37

DEVICE TYPE: PAL16R8
PIN NUMBER = SYMBOL TABLE:

1= CLK	8= Inter Pack L	15= No Carr Sta L
2= ON H	9= Adv PTR L	16= Rx Active L
3= Carr H	10= GND	17= Bad Pack Sta L
4= Runt Or NMatch H	11= EN	18= Pack Ok Sta L
5= NC H	12= Rx Ena Sta L	19= Miss L
6= Free Rx Buff H	13= Res PTR L	20= VCC
7= NC H	14= Inc PTR L	

NOTE: RXST1.PAL - (LNKH)

This program is the memory contents of the PAL logic used to form the Receive State machine. This PAL is used to receive the Preamble, Data, and check the CRC. If there is an error the State machine will jump to either the Miss, or Bad Pack State. If a packet is received without error the program will sequence to the write status routine in RXSTA2.PAL.

```
          |0|0|0|0|0|0|0|0|1|1|1|1|1|1|1|1|1|1|
PAL PINS: |2|3|4|5|6|7|8|9|2|3|4|5|6|7|8|9|

OUTPIN 19  H X X X L X X X X X X X L X X X Rx Active L * /Free Rx Buff H * ON H
           H X X X X X X X X X X L X X L Miss L * Rx Active L * ON H

OUTPIN 18  H L L X X X X X X X X X L X X H Rx Active L * /Carr H * /Runt Or NMatch H * /Miss L * ON H

OUTPIN 17  H L H X X X X X X X X X L X X X Rx Active L * /Carr H * Runt Or NMatch H * ON H

OUTPIN 16  H H X X X X X X X X X X L X X X No Carr Sta L * ON H * Carr H
           H H X X X X X X X X X L H X X Rx Active L * /Bad Pack Sta L * Carr H * ON H
           H H X X X X X X X X X L X H X Rx Active L * /Pack Ok Sta L * Carr H * ON H

OUTPIN 15  H L X X X X X X X L X X X X X X Rx Ena Sta L * /Carr H * ON H
           H L X X X X X X X X X L H X X X No Carr Sta L * /Rx Active L * /Carr H * ON H

OUTPIN 14  H X X X X X X X X L X X X X X X Res PTR L * ON H

OUTPIN 13  H H X X X X X X X X X L X X X X No Carr Sta L * ON H * Carr H

OUTPIN 12  L X X X X X X X X X X X X X X X /ON H
           H X X X X X X L X X X X X X X X Adv PTR L * ON H
           H X X X X X X X X X X X X L X X Bad Pack Sta L * ON H
           H X X X X X X X X X X X H X X L Miss L * ON H * /Rx Active L
           H H X X X X X X L X X X X X X X Rx Ena Sta L * Carr H * ON H
```


REVISIONS		
CHK	CHANGE NO.	REV

DRN: K.L. Sargent	DATE 08-NOV-82	ENG. Neil Bloomberg	DATE 08-NOV-82	TITLE: DELNA LINK MODULE PAL LISTINGS
CHK'D. Ken Sargent	DATE 08-NOV-82	BOARD LOCATION: SHEET 1 OF 1		
DSK:LNKTTH.T2PE[4,27]	08-NOV-82 16:14	NEXT HIGHER ASSEMBLY: D-UA-M7793-0-0		SIZE K / CODE CS / NUMBER M7793-0-TTH / REV. A
FIRST USED ON OPTION/MODEL: DELNA				

PART NUMBER: 23-029K5-00

LOCATION: E32

DEVICE TYPE: PAL16R8
PIN NUMBER = SYMBOL TABLE:

1= CLK	8= MISS L	15= Pause L
2= ON H	9= Pack Ok State L	16= RX WR STAT1 L
3= Carr H	10= GND	17= PTR ADV L
4= Runt Or NMatch H	11= EN	18= Sel Rx Data L
5= MEM CYCDN H	12= Set Miss L	19= Odd Byte L
6= RX FRAME H	13= PTR RES L	20= VCC
7= Mlen0 H	14= RX WR STAT0 L	

NOTE: RXST2.PAL - (LNKH)

This Program is the memory contents of the PAL logic used to form the Receive State Machine. This PAL forms the second part of the state machine and is used to Write status at the end of the Packet.

```
          |0|0|0|0|0|0|0|0|1|1|1|1|1|1|1|1|1|1|
PAL PINS: |2|3|4|5|6|7|8|9|2|3|4|5|6|7|8|9|

OUTPIN 19 H X X X X X X L X X X X X X X X Pack Ok State L * ON H
          H X X X X X X X X X X X X L L Odd Byte L * Sel Rx Data L * ON H

OUTPIN 18 H X X X H X H X X X X X X X X RX FRAME H * /MISS L * ON H
          H X X X X H X L X X X X X X X Pack Ok State L * Mlen0 H * ON H
          H X X L X X X X X X X X X L X Sel Rx Data L * /MEM CYCDN H * ON H

OUTPIN 17 H X X H X X X X X X X X L X X X RX WR STAT1 L * MEM CYCDN H * ON H

OUTPIN 16 H X X X X X X X X X X L X X X X Pause L * ON H
          H X X L X X X X X X X L X X X RX WR STAT1 L * /MEM CYCDN H * ON H

OUTPIN 15 H X X H X X X X X X X L X X X X X RX WR STAT0 L * MEM CYCDN H * ON H
          H X X X X X X X X X X L H X X X Pause L * /RX WR STAT1 L * ON H

OUTPIN 14 H X X X X X X X X L X X X X X X PTR RES L * ON H
          H X X L X X X X X X L X X X X X RX WR STAT0 L * /MEM CYCDN H * ON H

OUTPIN 13 H X X X X X X X X X X X X X H L Odd Byte L * /Sel Rx Data L * ON H

OUTPIN 12 H L L X X X L X X X X X X X X X MISS L * /Carr H * /Runt Or NMatch H * ON H
```


REVISIONS		
CHK	CHANGE NO.	REV

DRN: K. Sargent	DATE 08-NOV-82	ENG. Nell Bloomberg	DATE 08-NOV-82
CHK'D. Ken Sargent	DATE 08-NOV-82	BOARD LOCATION: SHEET 1 OF 1	
DSK:LNKTTJ.T2PC4,27] 08-NOV-82 16:15		NEXT HIGHER ASSEMBLY: D-UA-M7793-0-0	
FIRST USED ON OPTION/MODEL: DELUNA			

TITLE: DELUNA LINK MODULE PAL LISTINGS

SIZE	CODE	NUMBER	REV.
K	CS	M7793-0-TTJ	A

PART NUMBER: 23-037K4-00

LOCATION: E102, E103

DEVICE TYPE: PAL16R6
PIN NUMBER = SYMBOL TABLE:

1= CLK	8= Rx In H	15= Match3 L
2= STA ADR0 H	9= Clr L	16= Match2 L
3= STA ADR1 H	10= GND	17= Match1 L
4= STA ADR2 H	11= EN	18= Match0 L
5= STA ADR3 H	12= CRY Out L	19= CRY In H
6= STA ADR4 H	13= Match5 L	20= VCC
7= STA ADR5 H	14= Match4 L	

NOTES: STMT1.PAL - (LNKF)

This program is the memory contents of the PAL logic used to form the Station Address Detection STA ADR Logic.

```
          |0|0|0|0|0|0|0|0|1|1|1|1|1|1|1|1|1|1|
PAL PINS: |2|3|4|5|6|7|8|9|2|3|4|5|6|7|8|9|

OUTPIN 19

OUTPIN 18  L X X X X X L X X X X X X X L X /Rx In H * /STA ADR0 H * Match0 L
           H X X X X X H X X X X X X X L X Rx In H * STA ADR0 H * Match0 L
           X X X X X X X L X X X X X X X X Clr L

OUTPIN 17  X L X X X X L X X X X X X L X X /Rx In H * /STA ADR1 H * Match1 L
           X H X X X X H X X X X X X L X X Rx In H * STA ADR1 H * Match1 L
           X X X X X X X L X X X X X X X X Clr L

OUTPIN 16  X X L X X X L X X X X X L X X X /Rx In H * /STA ADR2 H * Match2 L
           X X H X X X H X X X X X L X X X Rx In H * STA ADR2 H * Match2 L
           X X X X X X X L X X X X X X X X Clr L

OUTPIN 15  X X X L X X L X X X X L X X X X /Rx In H * /STA ADR3 H * Match3 L
           X X X H X X H X X X X L X X X X Rx In H * STA ADR3 H * Match3 L
           X X X X X X X L X X X X X X X X Clr L

OUTPIN 14  X X X X L X L X X X L X X X X X /Rx In H * /STA ADR4 H * Match4 L
           X X X X H X H X X X L X X X X X Rx In H * STA ADR4 H * Match4 L
           X X X X X X X L X X X X X X X X Clr L

OUTPIN 13  X X X X X L L X X L X X X X X X /Rx In H * /STA ADR5 H * Match5 L
           X X X X X H H X X L X X X X X X Rx In H * STA ADR5 H * Match5 L
           X X X X X X X L X X X X X X X X Clr L

OUTPIN 12  X X X X X X X X X X X X X X X X VCC
           X X X X X X X X X X X X X L X X Match0 L
           X X X X X X X X X X X X L X X X Match1 L
           X X X X X X X X X X X L X X X X Match2 L
           X X X X X X X X X X L X X X X X Match3 L
           X X X X X X X X X L X X X X X X Match4 L
           X X X X X X X X L X X X X X X X Match5 L
           X X X X X X X X X X X X X X X H CRY In H
```


REVISIONS		
CHK	CHANGE NO.	REV

DRN: K.L. Sargent — DATE 18-NOV-82 — ENG. Neil Bloomberg — DATE 18-NOV-82
CHK'D. Ken Sargent — DATE 18-NOV-82 — BOARD LOCATION: SHEET 1 OF 1
DSK:LNKTTK.T2PL[4,27] 18-NOV-82 13:59 — NEXT HIGHER ASSEMBLY: D-UA-M7793-0-0
FIRST USED ON OPTION/MODEL: DELUNA

TITLE: DELUNA LINK MODULE PAL LISTINGS

SIZE	CODE	NUMBER	REV.
K	CS	M7793-0-TTK	A

PART NUMBER: 23-025K5-00

LOCATION: E49

DEVICE TYPE: PAL16R8
PIN NUMBER = SYMBOL TABLE:

1= CLK	8= CLSN H	15= Pre3 State L
2= TATT H	9= MEM CYCDN H	16= Pre4 State L
3= Inter Pack L	10= GND	17= DTATT L
4= RTRY CNT H	11= EN	18= Data State L
5= ON H	12= Tx Ena Sta L	19= Data REQ L
6= Tx Frame H	13= Pre1 State L	20= VCC
7= Cnt Done H	14= Pre2 State L	

NOTE: TXST1.PAL - (LNKL)

This program is the Memory contents of the PAL logic used to form the transmit State machine. This PAL is used to transmit the Preamble and the Data. If a Collision should occur the the PAL will clear all the States and then jump to the JAM State in PAL TxSTA3.PAL

```
          |0|0|0|0|0|0|0|0|1|1|1|1|1|1|1|1|1|1|
PAL PINS: |2|3|4|5|6|7|8|9|2|3|4|5|6|7|8|9|

OUTPIN 19  X X X H H X X X X X X L X X X X Pre3 State L * Tx Frame H * ON H
           X X X H H X X X X X X L X X X Pre4 State L * Tx Frame H * ON H
           X X X H H L L X X X X X X L X Data State L * Tx Frame H * /Cnt Done H * /CLSN H * ON H
           X X X H X X X L X X X X X X L Data REQ L * /MEM CYCDN H * ON H

OUTPIN 18  X X X H H X X X X X X X L X X X Tx Frame H * Pre4 State L * ON H
           X X X H X L L X X X X X X L X Data State L * /Cnt Done H * /CLSN H * ON H

OUTPIN 17  H X X X X X X X X X X X X X X X TATT H

OUTPIN 16  X X X H H X X X X X X L X X X X Tx Frame H * Pre3 State L * ON H
           X X X H X X X X X X X L X H X Pre4 State L * /Data State L * ON H

OUTPIN 15  X X X H H X X X X X X L X X X X Tx Frame H * Pre2 State L * ON H
           X X X H X X X X X X X L H X X Pre3 State L * /Pre4 State L * ON H

OUTPIN 14  X X X H H X X X X X L X X X X X Tx Frame H * Pre1 State L * ON H
           X X X H X X X X X X L H X X X Pre2 State L * /Pre3 State L * ON H

OUTPIN 13  X L X H X X X X X L X X X X X X Tx Ena Sta L * Inter Pack L * ON H
           X X X H X X X X X L H X X X X Pre1 State L * /Pre2 State L * ON H

OUTPIN 12  H X X H X X X X X X X X H X X TATT H * /DTATT L * ON H
           X X H H X X X X X X X X X X X RTRY CNT H * ON H
           X X X H X X X X L H X X X X X Tx Ena Sta L * /Pre1 State L * ON H
```


REVISIONS		
CHK	CHANGE NO.	REV

digital

DRN K. Sargent DATE 08-NOV-82 ENG. Neil Bloomberg DATE 08-NOV-82
CHK D. Ken Sargent DATE 08-NOV-82 BOARD LOCATION: SHEET 1 OF 1
DSK:LNKITL.T2P[4,27] 08-NOV-82 16:15 NEXT HIGHER ASSEMBLY: D-UA-M7793-0-0
FIRST USED ON OPTION/MODEL: DELUNA

TITLE: DELUNA LINK MODULE PAL LISTINGS

SIZE	CODE	NUMBER	REV.
K	CS	M7793-0-TTL	A

PART NUMBER: 23-026K5-00

LOCATION: E51

DEVICE TYPE: PAL16R8
PIN NUMBER = SYMBOL TABLE:

1= CLK	8= CLSN H	15= Tx WR Stat0 L
2= Data State L	9= MEM CYCDN H	16= Tx WR Stat1 L
3= DTCR H	10= GND	17= Sel Tx CRC L
4= RTRY H	11= EN	18= Done L
5= ON H	12= CRC1 State L	19= Stat Req L
6= Tx Frame H	13= CRC2 State L	20= VCC
7= Cnt Done H	14= RES PTR L	

NOTES: TXST2.PAL - (LNKL)

This program is the memory contents of the PAL logic used to form the transmit State machine. This PAL is used to transmit the CRC at the end of the packet. If a CLSNision should occur all States will be cleared. At the end of the CRC or if DTCR is valid at the end of the Data field the PAL will then Write Status to the Link Memory buffer in the PORT.

```
          |0|0|0|0|0|0|0|0|1|1|1|1|1|1|1|1|1|1|
PAL PINS: |2|3|4|5|6|7|8|9|2|3|4|5|6|7|8|9|

OUTPIN 19 X X X H X X X L X X X L X X X X Tx WR Stat0 L * /MEM CYCDN H * ON H
          X X X H X X X L X X X L X X X Tx WR Stat1 L * /MEM CYCDN H * ON H
          X X X H X X X L X X X X X X L Stat Req L * /MEM CYCDN H * ON H

OUTPIN 18 X X X H X X X H X X X L X X X Tx WR Stat1 L * ON H * MEM CYCDN H

OUTPIN 17 X X X H X H L X X X X X X X X Cnt Done H * /CLSN H * ON H
          X X X H X X L X X X H X X L X X Sel Tx CRC L * /CLSN H * /RES PTR L * ON H

OUTPIN 16 X X X H X X X H X X X L X X X X Tx WR Stat0 L * MEM CYCDN H * ON H
          X X X H X X X L X X X L X X X Tx WR Stat1 L * /MEM CYCDN H * ON H

OUTPIN 15 X X X H X X X X X X L X X X X X RES PTR L * ON H
          X X X H X X X L X X X L X X X X Tx WR Stat0 L * /MEM CYCDN H * ON H

OUTPIN 14 X X X H H X L X X L X X X X X X CRC2 State L * Tx Frame H * /CLSN H * ON H
          L H X H X H X X X X X X X X X X Data State L * Cnt Done H * ON H * DTCR H
          X X H H X X X X X X X X X X X X RTRY H * ON H

OUTPIN 13 X L X H H X L X L X X X X X X X CRC1 State L * Tx Frame H * /CLSN H * ON H * /DTCR H
          X L X H L X L X X L H X X X X X CRC2 State L * /Tx Frame H * ON H * /RES PTR L * /CLSN H * /DTCR H

OUTPIN 12 L L X H X H L X X X X X X X X X Data State L * Cnt Done H * ON H * /CLSN H * /DTCR H
          X L X H X X L X L H X X X X X X CRC1 State L * /CRC2 State L * ON H * /CLSN H * /DTCR H
```


REVISIONS		
CHK	CHANGE NO.	REV

digital

DRN: K. Sargent DATE 08-NOV-82
CHK: D. Ken Sargent DATE 08-NOV-82
ENG. Neil Bloomberg DATE 08-NOV-82
BOARD LOCATION:
SHEET 1 OF 1
DSK:LNKTTM.T2P[4,27] 08-NOV-82 16:15
NEXT HIGHER ASSEMBLY: D-UA-M7793-0-0
FIRST USED ON OPTION/MODEL: DELUNA

TITLE: DELUNA LINK MODULE PAL LISTINGS

SIZE	CODE	NUMBER	REV.
K	CS	M7793-0-TTM	A

PART NUMBER: 23-027K5-00

LOCATION: E36

DEVICE TYPE: PAL16R8
PIN NUMBER = SYMBOL TABLE:

1= CLK	8= CLSN H	15= En CRC L
2= Pre1 State L	9= MEM CYCDN H	16= Sel Tx Data L
3= Pre4 State L	10= GND	17= Len Req L
4= ON H	11= EN	18= Inc PTR L
5= Tx Frame H	12= Done Jam L	19= Res PTR L
6= CLSN Jam H	13= Jam L	20= VCC
7= Cnt Done L	14= Tx Active L	

NOTE: TXST3.PAL - (LNKL)

This program is the memory contents of the PAL logic used to form the transmit State machine. This PAL is used to provide discrete control signals to the LINK.

```
          |0|0|0|0|0|0|0|0|1|1|1|1|1|1|1|1|1|1|
PAL PINS: |2|3|4|5|6|7|8|9|2|3|4|5|6|7|8|9|

OUTPIN 19  L X H H X X X X X X X X X X X X Pre1 State L * Tx Frame H * ON H

OUTPIN 18  X X H X X X X X X X X X X X L Res PTR L * ON H

OUTPIN 17  X X H X X X X X X X X X X L X Inc PTR L * ON H
           X X H X X X X L X X X X L X X Len Req L * /MEM CYCDN H * ON H

OUTPIN 16  X L H H X X X X X X X X X X X Pre4 State L * Tx Frame H * ON H
           X X H X X X X X X L X L X X X Sel Tx Data L * Tx Active L * ON H

OUTPIN 15  X X H X X X L X X X X X L X X X Sel Tx Data L * /CLSN H * ON H

OUTPIN 14  L X H X X X X X X X X X X X X X Pre1 State L * ON H
           X X H X X H X X X H L X X X X X Tx Active L * /Jam L * /Cnt Done L * ON H
           X X H X L X X X X L L X X X X X Tx Active L * /CLSN Jam H * Jam L * ON H
           X X H X X X X X X L L X H X X X Tx Active L * Jam L * /Sel Tx Data L * ON H

OUTPIN 13  X X H X X X H X X H L X X X X X CLSN H * /Jam L * Tx Active L * ON H
           X X H X L X X X X L X X X X X X Jam L * /CLSN Jam H * ON H
           X X H X X X X X X L X X H X X X Jam L * /Sel Tx Data L * ON H

OUTPIN 12  X X H X H X X X X L X X L X X X Jam L * CLSN Jam H * Sel Tx Data L * ON H
```


REVISIONS		
CHK	CHANGE NO.	REV

DRN: K. Sargent DATE 08-NOV-82
CHK: D. Ken Sargent DATE 08-NOV-82
ENG. Neil Bloomberg DATE 08-NOV-82
BOARD LOCATION:
SHEET 1 OF 1
NEXT HIGHER ASSEMBLY: D-UA-M7793-0-0
DSK:LNKTTN.T2P[4,27] 08-NOV-82 16:15
FIRST USED ON OPTION/MODEL: DELUNA

TITLE: DELUNA LINK MODULE PAL LISTINGS

SIZE	CODE	NUMBER	REV.
K	CS	M7793-0-TTN	A

WIRE TABLE

FROM	TO	FROM	TO
P1-A	P2-VV	P1-Y	P2-X
P1-B	P2-UU	P1-Z	P2-W
P1-C	P2-TT	P1-AA	P2-V
P1-D	P2-SS	P1-BB	P2-U
P1-E	P2-RR	P1-CC	P2-T
P1-F	P2-PP	P1-DD	P2-S
P1-H	P2-NN	P1-EE	P2-R
P1-J	P2-MM	P1-FF	P2-P
P1-K	P2-LL	P1-HH	P2-N
P1-L	P2-KK	P1-JJ	P2-M
P1-M	P2-JJ	P1-KK	P2-L
P1-N	P2-HH	P1-LL	P2-K
P1-P	P2-FF	P1-MM	P2-J
P1-R	P2-EE	P1-NN	P2-H
P1-S	P2-DD	P1-PP	P2-F
P1-T	P2-CC	P1-RR	P2-E
P1-U	P2-BB	P1-SS	P2-D
P1-V	P2-AA	P1-TT	P2-C
P1-W	P2-Z	P1-UU	P2-B
P1-X	P2-Y	P1-VV	P2-A

LEGEND

NUMBER	REV	DIM "X"	PRECUT LENGTH
BCØ8R-Ø1	T1	1.00 FT.	1.00FT 1.5 IN ±1.00 IN
BCØ8R-Ø2		2.00 FT.	2.00FT 1.5 IN ±1.00 IN
BCØ8R-Ø3		3.00 FT.	3.00FT 1.5 IN ±1.00 IN
BCØ8R-Ø4		4.00 FT.	4.00FT 1.5 IN ±1.00 IN
BCØ8R-Ø5		5.00 FT.	5.00FT 1.5 IN ±2.00 IN
BCØ8R-Ø6		6.00 FT.	6.00FT 1.5 IN ±2.00 IN
BCØ8R-Ø7		7.00 FT.	7.00FT 1.5 IN ±2.00 IN
BCØ8R-Ø8		8.00 FT.	8.00FT 1.5 IN ±2.00 IN
BCØ8R-Ø9		9.00 FT.	9.00FT 1.5 IN ±2.00 IN
BCØ8R-1Ø		10.00 FT.	10.00FT 1.5 IN ±3.00 IN
BCØ8R-11		11.00 FT.	11.00FT 1.5 IN ±3.00 IN
BCØ8R-12		12.00 FT.	12.00FT 1.5 IN ±3.00 IN
BCØ8R-13		13.00 FT.	13.00FT 1.5 IN ±3.00 IN
BCØ8R-14		14.00 FT.	14.00FT 1.5 IN ±3.00 IN
BCØ8R-15		15.00 FT.	15.00FT 1.5 IN ±3.00 IN
BCØ8R-16		16.00 FT.	16.00FT 1.5 IN ±3.00 IN
BCØ8R-17		17.00 FT.	17.00FT 1.5 IN ±3.00 IN
BCØ8R-18		18.00 FT.	18.00FT 1.5 IN ±3.00 IN
BCØ8R-19		19.00 FT.	19.00FT 1.5 IN ±3.00 IN
BCØ8R-2Ø		20.00 FT.	20.00FT 1.5 IN ±3.00 IN
BCØ8R-25		25.00 FT.	25.00FT 1.5 IN ±3.00 IN
BCØ8R-3Ø		30.00 FT.	30.00FT 1.5 IN ±0.60 FT
BCØ8R-35		35.00 FT.	35.00FT 1.5 IN ±0.70 FT
BCØ8R-5Ø		50.00 FT.	50.00FT 1.5 IN ±1.00 FT
BCØ8R-6Ø		60.00 FT.	60.00FT 1.5 IN ±1.20 FT
BCØ8R-75		75.00 FT.	75.00FT 1.5 IN ±1.50 FT
BCØ8R-AØ		100.00 FT.	100.00FT 1.5 IN ±2.00 FT
BCØ8R A3		130.00 FT.	130.00FT 1.5 IN ±2.60 FT
BCØ8R-A6		160.00 FT.	160.00FT 1.5 IN ±3.20 FT
BCØ8R-2D		28 IN.	29.5Ø IN ± 1.Ø IN.
BCØ8R-2J		32 IN.	33.5Ø IN ± 1.Ø IN.
BCØ8R-ØF	T1	6 IN	7.50 IN. ±0.5 IN.

1. DELETED.
2. CONNECTOR LEGEND IDENTIFICATION TO BE PLACED ON SHIELD SIDE OF CABLE IN THIS AREA AS SHOWN.
3. INSPECTION & TEST STAMPS TO BE PLACED AT EACH END OF THE CABLE ASSY.
4. STRIP LENGTH SHOULD BE 5/8" ± 4/32.
5. WHEN INSTALLING STRAIN RELIEF, MAKE SURE THAT THE RECESSED SIDE IS AGAINST THE CABLE.

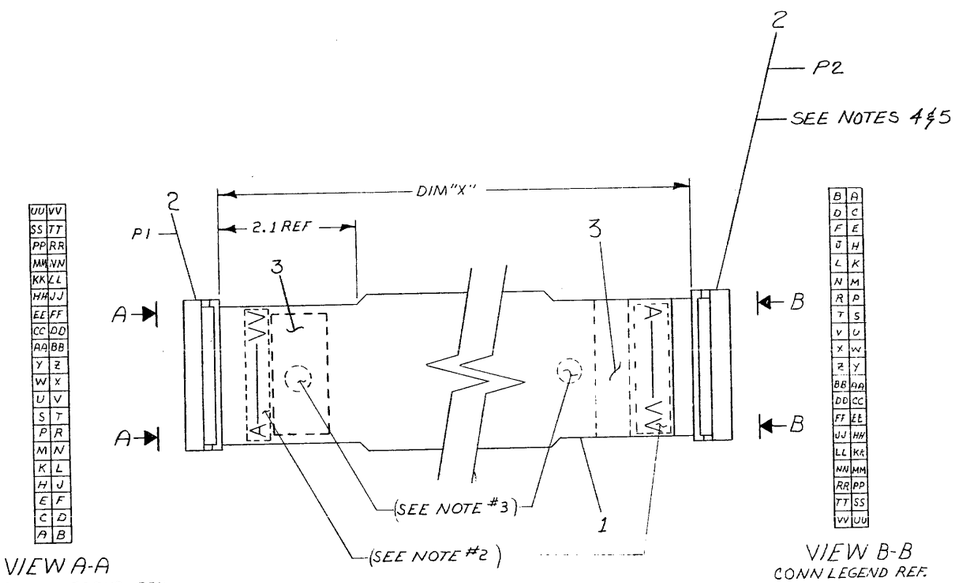

UU	VV
SS	TT
PP	RR
MM	NN
KK	LL
HH	JJ
EE	FF
CC	DD
AA	BB
Y	Z
W	X
U	V
S	T
P	R
M	N
K	L
H	J
E	F
C	D
A	B

VIEW A-A
CONN LEGEND REF

B	A
D	C
F	E
U	H
L	K
N	M
R	P
T	S
V	U
X	W
Z	Y
BB	AA
DD	CC
FF	EE
JJ	HH
LL	KK
NN	MM
RR	PP
TT	SS
VV	UU

VIEW B-B
CONN LEGEND REF.

CAUTION:
OFF SHEET PARTS LIST
K-PL-BCØ8R-Ø-Ø.

1	LABEL, IDENT	3616073-00	3
2	CONNECTOR, 40 SOCKET	1211206	2
A/R	CABLE, 40 COND. FLAT W/SHIELD	170000-7	1
	DESCRIPTION	DWG./PART NO.	ITEM NO.

UNLESS OTHERWISE SPECIFIED DIMENSIONS ARE IN INCHES

ANGLES ±0° 30'	CLASS OF ACCURACY (CHECK ONE)	OVER 0 TO 0.2	OVER 0.2 TO 1.2	OVER 1.2 TO 4.0	OVER 4.0 TO 12.0	OVER 12.0 TO 40.0	OVER 40.0 TO 80.0
SURFACE QUALITY IN MICROINCHES	MEDIUM	±.004	±.008	±.012	±.016	±.024	±.04
	PREFERRED	±.012	±.016	±.025	±.04	±.063	±0.1

NOMINAL DIMENSION RANGE INCHES

QUANTITY & VARIATION

THIRD ANGLE PROJECTION

REMOVE BURRS AND BREAK SHARP CORNERS

DO NOT SCALE DWG

MATERIAL

FINISH

DRN	D. FONTAINE	8-28-70
CHK'D	J. FLEMING	8-28-70
ENG	P. GARDNER	9-3-70
PROJ. ENG	GARDNER	9-3-70
PROD.	DONALD	9-4-70

NEXT HIGHER ASSY.

SCALE

SHEET 1 OF 1

FIRST USED ON

digital

TITLE BCØ8R I/O CABLE

SIZE	CODE	NUMBER	REV.
D	UA	BCØ8R-Ø-Ø	T

DIST.

REVISIONS			
CHANGE NO.			REV.
BCØ8R-000006	REVISED & REDRAWN	S. HOLMES	L
BCØ8R-000007		P. GARDNER	M
BCØ8R-ML008		D. FRENIERE	N
BCØ8R-MK009		D. FRENIERE	P
BCØ8R-MK011		D. FRENIERE	S
BCØ8R-MK010		DAVID ZOPF	R
BCØ8R-MK012		CHRIS RYAN	T
		T. Hurnel 1-17-85	
		C. RYAN	

AUTOMATED BY PRTLST.3P(44)

P A R T S L I S T

LINE	ITEM	TOP DOCUMENT	PART NUMBER	MIN REV	DESCRIPTION	QTY PER VARIATION 01	02	03	04	05	06	07	08	09	10	11	12
					VARIATION REVISION LEVEL:	T1	T1	T1	T1	T1	T1	T1	T1	T1	T1	T1	T1
1	1		1700004-00		CABLE,RIBBON BOND 40COND 30AWG	A/R	A/R	A/R	A/R	A/R	A/R	A/R	A/R	A/R	A/R	A/R	A/R
2	2		1211206-00		CONN,IDC 40SKT(2X20),100CC GOL	2	2	2	2	2	2	2	2	2	2	2	2
3	3		3616073-00		LABEL,ID W/COPY VERTICAL	2	2	2	2	2	2	2	2	2	2	2	2

REVISION HISTORY			BASIC PART NO: BC08R
ENG	ECO NUMBER	REV	SECTION A OF C
DF	BC08R-MK009	P	SECTION.VARIATION INDEX
DZ	BC08R-MK010	R	[A]01,02,03,04,05,06,
CR	BC08R-MK011	S	07,08,09,10,11,12
CR	BC08R-MK012	T	[B]13,14,15,16,17,18,
			19,20,25,30,35,50
			[C]60,75,A0,A3,A6,2D,
			2J,0F
			[D]
			[E]
			[F]

DRN: K.FONTAINE	DATE: 28-AUG-70	D I G I T A L
CHK'D: J.FLEMING	DATE: 28-AUG-70	TITLE PARTS LIST BC08R-0-0
DES.ENG: P.GARDNER	DATE: 09-MAR-70	DOCUMENT NUMBER
RESP.ENG.: DAVID ZOPF	DATE: 14-DEC-81	SIZE K, CODE PL, NUMBER BC08R-0-0, REV T
MFG.ENG.: J.FISKO	DATE: 14-DEC-81	RELEASE DATE: 17-JAN-85
ASSEMBLY NUMBER: D-UA-BC08R-0-0	TOP DOCUMENT NUMBER:	FILE NAME: MK0406.PLS EDIT # 5

AUTOMATED BY PRTLST.5R(55)

P A R T S L I S T

LINE	ITEM	TOP DOCUMENT	PART NUMBER	MIN REV	DESCRIPTION	QTY PER VARIATION 00	KL	KM	K1
					VARIATION REVISION LEVEL:	A1	A1	A1	A1
1	1	D-AD-7018799-0-0	7018799-00		UNA BULKHEAD ASSY.	REF	1	1	1
2	2	D-IA-7018798-0-0	7018798-08		UNA BULKHEAD CABLE ASSY.	REF	0	1	1
3	3	D-IA-7018798-0-0	7018798-04		UNA BULKHEAD CABLE ASSY.	REF	1	0	0
4	4	D-IA-7427292-0-DBU	7427292-01		FRAME,I/O DOUBLE QUAD	REF	1	1	1
5	5		9006073-03		SCREW,MACH TRUSS PHIL 10-	REF	0	0	2
6	6		9007786-00		RETAINER,U-NUT 10-32X	REF	0	0	2

REVISION HISTORY			BASIC PART NO: CKDEUNA				
ENG	ECO NUMBER	REV	SECTION A OF A				
---	INITIAL	A	SECTION,VARIATION INDEX [A]00,KL,KM,K1	DRN: MIKE MATTOCK	DATE: 01-MAR-85	D I G I T A L	
			[B]	CHK'D: FRANK CARBONE	DATE: 01-MAR-85	TITLE PARTS LIST DEUNA CAB KIT	
			[C]	DES.ENG: MIKE LAWRENCE	DATE: 01-MAR-85	DOCUMENT NUMBER SIZE K CODE PL NUMBER CKDEUNA-0-0	REV A
			[D]	RESP.ENG.: MIKE MATTOCK	DATE: 01-MAR-85		
			[E]	MFG.ENG.: DANA DUNCAN	DATE: 01-MAR-85	RELEASE DATE: 01-MAR-85	
			[F]	ASSEMBLY NUMBER:	TOP DOCUMENT NUMBER: #K-DD-CKDEUNA-0	FILE NAME: MK1164.PLS	EDIT # 4

WIRE TABLE

ITEM NO.	DESCRIPTION AWG	DESCRIPTION COLOR	FROM POINT	FROM CONNECTION	FROM TERM	TO POINT	TO CONNECTION	TO TERM	REMARKS
1	SHIELD	—	1	P1-1	8,6	—	—	—	SHIELD DRAIN WIRE
1	28	BLU	2	P1-2	8,6	19	P2-14	4,9	COLLISION PRESENCE +
		GRN	3	P1-9	8,6	18	P2-15	4,9	COLLISION PRESENCE −
1	28	WHT	4	P1-5	8,6	17	P2-6	4,9	RECEIVE +
		GRY	5	P1-12	8,6	16	P2-7	4,9	RECEIVE −
1	28	ORG	6	P1-3	8,6	15	P2-10	4,9	TRANSMIT +
		YEL	7	P1-10	8,6	14	P2-11	4,9	TRANSMIT −
1	24	RED	9	P1-13	8,6	11	P2-1	3,9	POWER
		VIO	10	P1-15	8,6	12	P2-20	3,9	FUSE LOW
		BLK	8	P1-6	8,6	13	P2-4	3,9	POWER RETURN

LEGEND

NUMBER	DIM "Y" (PRECUT)	REV
7018798-08	7 FT. 10 IN ± 2 IN.	B2
7018798-04	4 FT. 0 IN ± 2 IN.	B2
7018798-03	3 FT. 0 IN ± 2 IN	A1
7018798-07	7 FT. 0 IN ± 2 IN	A1

NOTES:

1. KEYING PLUG (ITEM 10) IS INSERTED INTO P2-2.
2. REMOVE JACKET & OUTER BRAID 1.50" TO ALLOW SEPARATION OF WIRES, P2 END.
3. STRIP FOIL SHIELD FROM WIRES, P2 SIDE.
4. CUT "SHIELD WIRE" FLUSH WITH OUTER JACKET, (P2 SIDE ONLY).
5. REMOVE JACKET & OUTER BRAID TO ALLOW SEPARATION OF WIRES, P1 SIDE.
6. STRIP FOIL SHIELD FROM WIRES 1.00 IN.
7. MOVE PLASTIC HOOD UP TO P1 CONNECTOR & ATTACH SLIDE LATCH ASSY. ITEM NO. 7 USING SLIDE LATCH ASSY SCREWS PROVIDED (DISCARD WASHERS & NUTS - ITEM NO. 7) TIGHTEN 3 IN - LBS. (DISCARD TWO CONNECTOR MOUNTING SCREWS HOOD ASSY) ITEM NO. 5.
8. TIGHTEN STRAIN RELIEF SET SCREW ON PLASTIC HOOD. 3 IN - LBS.
9. HAND CRIMP TOOLS: AMP P/N 90302-1 BERG ELECTRIC P/N HT-95
10. ADD ITEM NO.12 FLUSH WITH OUTER JACKET.
11. DO NOT USE MORE THAN 8FT (2.5M) OR ETHERNET SPECIFICATION MAY BE VIOLATED IN STANDARD CONFIGURATIONS.

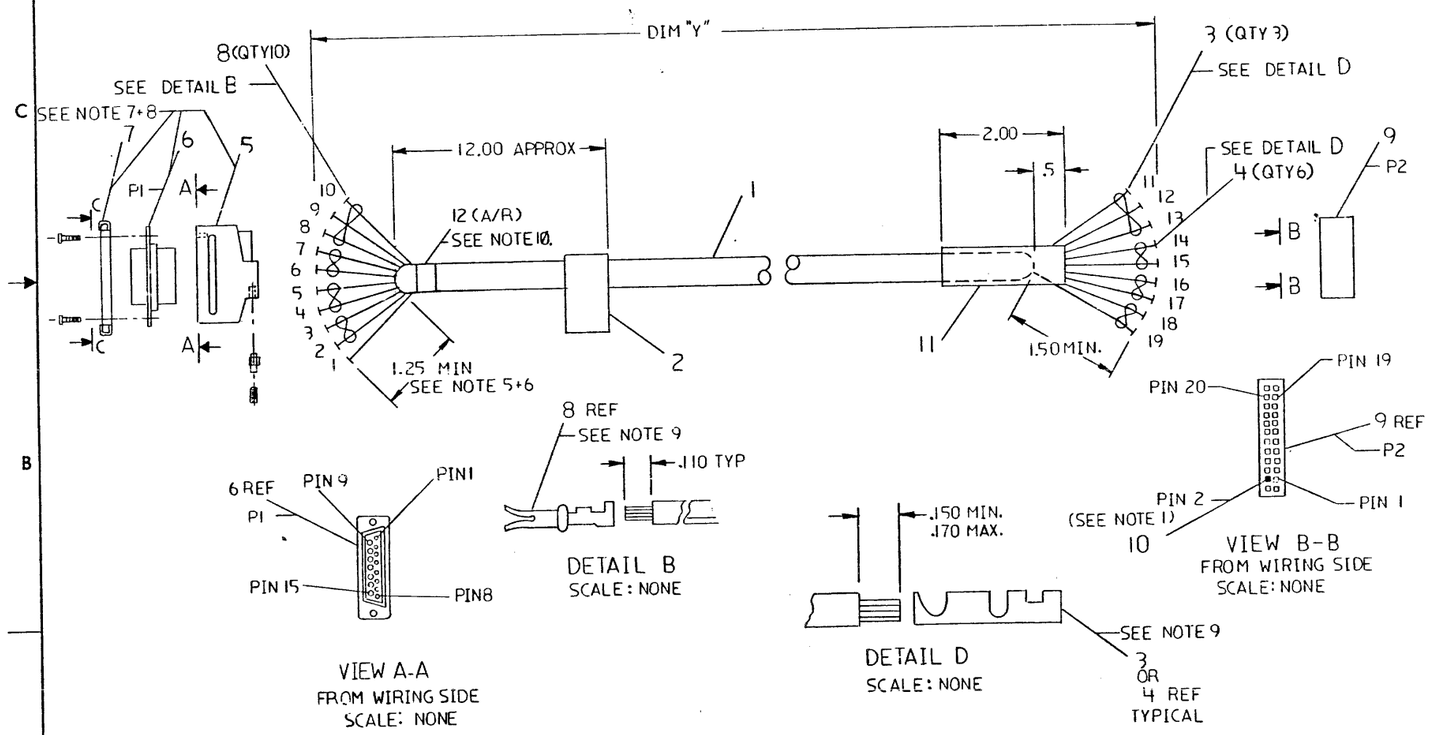

CAUTION: SEE OFF SHEET PARTS LIST K-PL-7018798-0-DBF (MK1172.PLS)

REVISION HISTORY			
DATE	ECO NUMBER	REV.	
7 2	7018798-TW001	B	
7/12	7018798-MK002	C	M. LAWRENCE

DRD 1000

QUANTITY & VARIATION	DESCRIPTION	DRAWING NO.	PART NO. / ITEM NO

UNLESS OTHERWISE SPECIFIED DIMENSIONS ARE IN INCHES AND THE FOLLOWING TOLERANCES APPLY (PER DEC STD 114)

INCHES TOLERANCES	ANGLES ±0°30'	APPLICABLE DIMENSION RANGE (CHECK ONE)	OVER 0 TO 0.2	OVER 0.2 TO 1.2	OVER 1.2 TO 4.0	OVER 4.0 TO 12.0	OVER 12.0 TO 40.0	OVER 40.0 TO 80.0
X = ± .1	SURFACE QUALITY	DIMENSION RANGE IN INCHES	± .02	± .03	± .05	± .10		
.XX = ± .02			± .004	± .008	± .012	± 0.8	± .024	± .04
.XXX = ± .005	MICROINCHES							

THIRD ANGLE PROJECTION

DO NOT SCALE DRAWING

REMOVE BURRS AND BREAK SHARP CORNERS

MATERIAL: SEE PARTS LIST

FINISH

		DATE
DRN	H. Van Fujen	14 MAY 82
CHK'D		
DES. ENG.		
REINF. ENG.		
MFG. ENG.	Dave K. Dunson	25-OCT-82
NEXT HIGHER DOC		

TITLE: UNA BULKHEAD CABLE ASSY

digital

DOCUMENT NUMBER

SIZE	CODE	NUMBER	REV
D	IA	7018798-0-0	C

SCALE — SHEET 1 OF 1

TW

AUTOMATED BY PRTLST.4Q(50)

P A R T S L I S T

LINE	ITEM	TOP DOCUMENT	PART NUMBER	MIN REV	DESCRIPTION	QTY PER VARIATION 04	08	03	07
					VARIATION REVISION LEVEL:	B2	B2	A1	A1
1	1	SEE NOTE	1700347-01		CABLE,RND 09COND 28AWG TWP	48	96	36	84
2	2		3616073-00		LABEL,ID W/COPY VERTICAL	1	1	1	1
3	3		1210089-07		CONN,P+S 01SKT 28-22AWG .0500D	3	3	3	3
4	4		1210089-00		CONN,P+S 01SKT 32-28AWG .0500D	6	6	6	6
5	5		1211245-02		CONN,D SUB 15POS HOOD STRAIGHT P	1	1	1	1
6	6		1210493-58		CONN,D SUB 15SKT HSG STR	1	1	1	1
7	7		1218489-00		LATCH ASSY,SLIDE 410 LG	1	1	1	1
8	8		1210493-45		CONN,D SUB SKT CRIMP 28-24AWG	10	10	10	10
9	9		1210918-25		CONN,P+S 24POS(2X12).100CC HSG	1	1	1	1
10	10		9009140-00		CONN,P+S POLARIZING PLUG FOR-	1	1	1	1
11	11	SEE NOTE	9107252-00		TUBING,SHRINK .375ID EXP	2	2	2	2
12	12		9007834-00		TAPE,URETHAN ADHDBC .50 WDX .03	A/R	A/R	A/R	A/R

13 NOTE: ITEMS 1 & 11 ARE IN INCHES

REVISION HISTORY			BASIC PART NO: 7018798			
ENG	ECO NUMBER	REV	SECTION A OF A	DRN: R.J.RILEY	DATE: 16-NOV-82	D I G I T A L
---	INITIAL	A	SECTION.VARIATION INDEX	CHK'D: R.J.RILEY	DATE: 16-NOV-82	TITLE PARTS LIST UNA BULKHEAD CABLE ASSY
RG	7018798-TW001	B	[A]04,08,03,07			
ML	7018798-MK002	C		DES.ENG: R.GRAHAM	DATE: 16-NOV-82	DOCUMENT NUMBER
			[B]			SIZE K / CODE PL / NUMBER 7018798-0-0 / REV C
			[C]	RESP.ENG.: R.GRAHAM	DATE: 16-NOV-82	
			[D]			
			[E]	MFG.ENG.: D.DUNCAN	DATE: 16-NOV-82	RELEASE DATE: 30-JAN-85
			[F]	ASSEMBLY NUMBER: D-IA-7018798-0-0	TOP DOCUMENT NUMBER: K-DD-DEUNA-0-0	FILE NAME: MK1172.PLS / EDIT # 10

SIZE	CODE	NUMBER	REV
D	AD	7018799-0-0	E

LEGEND		REV
7018799-00	AS SHOWN	C2
7018799-01	USED ON DECSA OPTIONS	C2

NOTES:

1. VIEW A-A IS FOR LOCATION POINTS FOR ITEMS 2, 8 AND 10.
2. MARK DEC PART NO. & REV LEVEL PER DEC STD 178.

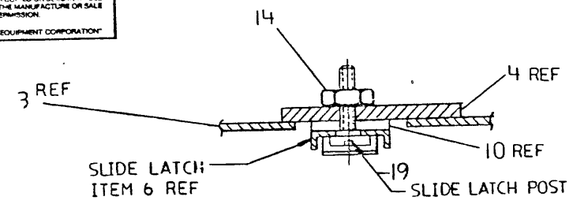

SECTION B-B
SCALE: NONE

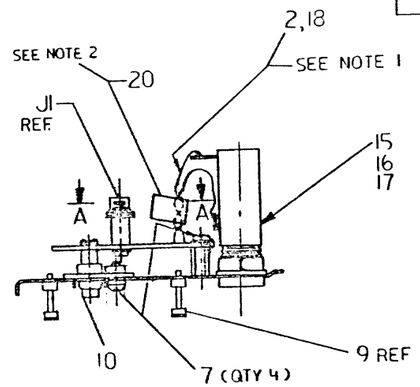

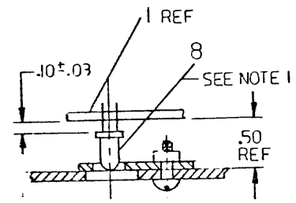

SECTION C-C
SCALE: 2/1

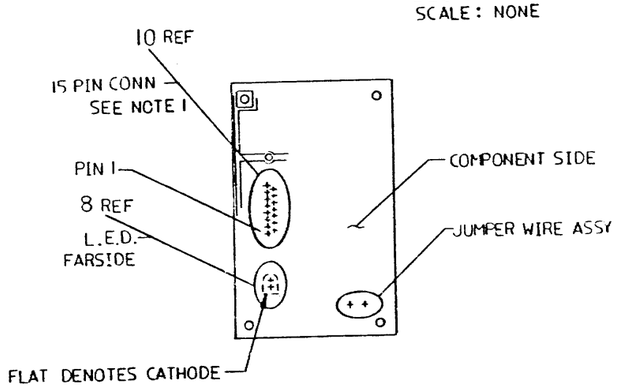

VIEW A-A
LOCATION OF SOLDERING POINTS

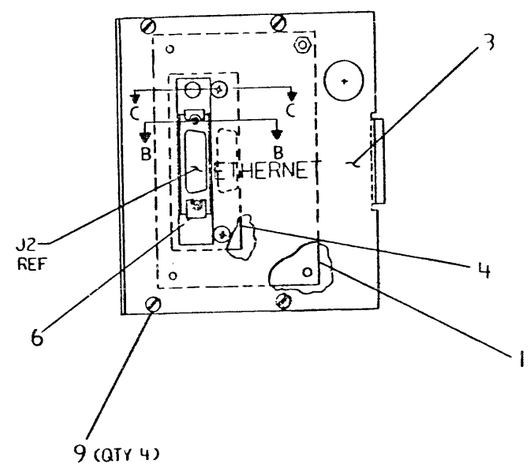

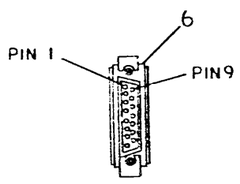

DETAIL D-D

CAUTION: SEE OFF SHEET PARTS LIST
K-PL-7018799-0-0

REVISION HISTORY				
DATE	ECO NUMBER			REV
7018799-TW001				B
R. GRAHAM				
7018799-1W002				C
D. GARDNER				
R. GRAHAM				
7018799-MK003				D
T. HUMMEL				
M. LAWRENCE				
7018799-MK004				E
T. HUMMEL				
G. GRAHAM				

DRD 1000

DESCRIPTION	DRAWING NO.	PART NO.	ITEM NO.

UNLESS OTHERWISE SPECIFIED DIMENSIONS ARE IN INCHES AND THE FOLLOWING TOLERANCES APPLY (PER DEC STD 114)

INCHES TOLERANCES	ANGLES ±0°30'	APPLICABLE DIMENSION RANGE (CHECK ONE)	DIMENSION RANGE IN INCHES: OVER 0 TO 0.2	OVER 0.2 TO 1.2	OVER 1.2 TO 4.0	OVER 4.0 TO 12.0	OVER 12.0 TO 40.0	OVER 40.0 TO 80.0
X = ±.1	SURFACE QUALITY	☐	±.02		±.03	±.05	±.10	
XX = ±.02		☐						
XXX = ±.005	MICROINCHES	☐	±.004	±.008	±.012	±.016	±.024	±.04

QUANTITY & VARIATION

THIRD ANGLE PROJECTION

DO NOT SCALE DRAWING

REMOVE BURRS AND BREAK SHARP CORNERS

MATERIAL: SEE PARTS LIST

FINISH: + +

		DATE
DRN	H. Dougan	3JUL82
CHK'D	[illegible]	11/16/82
ENG. ENG.	[illegible]	11/18/82
PROD. ENG.	[illegible]	11/18/82
MFG. ENG.	Derek Dawson	15-OCT-82
NEXT HIGHER DOC.		

TITLE: UNA BULKHEAD ASSY

digital

DOCUMENT NUMBER: D AD 7018799-0-0 REV E

SCALE 1/1 SHEET OF

TW

AUTOMATED BY PRTLST.5R(55)

P A R T S L I S T

LINE	ITEM	TOP DOCUMENT	PART NUMBER	MIN REV	DESCRIPTION VARIATION REVISION LEVEL:	QTY PER VARIATION 00 C2	01 C2
1	1	D-UA-5415552-0-0	5415552-00		UNA BULKHEAD	1	1
2	2	B-IA-7018810-0-0	7018801-00		JUMPER WIRE ASSY.	-	1
3	3	D-IA-7426404-09-0	7426404-09		PANEL,QUAD (D-IA)	1	-
4	4	C-IA-7427299-0-0	7427299-01		PLATE,CONNECTOR MIG	1	1
5	5		1210242-01		*** THIS ITEM IS NOT USED ***	-	-
6	6		1218489-03		LATCH ASSY,SLIDE	1	1
7	7		9009984-02		SCREW,SEMS PAN PHIL 6-	4	-
8	8		1110864-00		LED 2MCD@10MA	1	1
9	9		1219534-01		SCREW, CAPTV SLOT 4-	4	-
10	10		1220350-01		CONN,D SUB 15SKT ASSY SIR TIN PL	1	1
11	11		7427750-01		*** THIS ITEM IS NOT USED ***	-	-
12	12		1012784-00		*** THIS ITEM IS NOT USED ***	-	-
13	13		9107278-11		TUBING,TEFLON .042ID	A/R	A/R
14	14		9006557-00		NUT,HEX EXT TOOTH LCK*SHR 4-40	2	2
15	15		1222255-02		FUSEHOLDER , 16. A 250 V HIGH	1	-
16	16		1222255-03		FUSECARRIER ,1/4X1 1/4 FUSE (GRE	1	-
17	17		9007213-00		FUSE,SLO BLO 1-1/2 A,250V GLASS	1	-
18	18	D-IA-7018810-0-0	7018801-01		CKT BKR JUMPER WIRE ASSY	1	-
19	19		1218489-05		LATCH ASSY,SLIDE .41 LG POS	2	2
20	20		3616073-00		LABEL,ID W/COPY VERTICAL	1	1

21 NOTE: IF OLD 5415552 REV IS USED ADD QTY. OF 2 CAPS. #1012784-00 (.047 MFD, 50V +80-20%)

REVISION HISTORY			BASIC PART NO: 7018799	DRN: R.J. RILEY	DATE: 01-APR-85	D I G I T A L
ENG	ECO NUMBER	REV	SECTION A OF A			
	INITIAL	A	SECTION.VARIATION INDEX	CHK'D: R.J. RILEY	DATE: 01-APR-85 5-AUG 85	TITLE PARTS LIST UNA BULKHEAD ASSY.
PG	7018799-I*001	B	[A]00,01			
PG	7018799-I*002	C		DES.ENG: R.GRAHAM	DATE: 01-APR-85 5 AUG 85	DOCUMENT NUMBER
GG	7018799-MK003	D	[B]			SIZE K / CODE PL / NUMBER 7018799-0-0 / REV E
ML	7018799-MK004	E	[C]	RESP.ENG.: R.GRAHAM	DATE: 01-APR-85	
			[D]			
			[E]	MFG.ENG.: D. DUNCAN	DATE: 01-APR-85	RELEASE DATE: 05-AUG-85
			[F]	ASSEMBLY NUMBER: D-AD-7018799-0-0	TOP DOCUMENT NUMBER: B-DD-DEUNA-0-0	FILE NAME: MK1191.PLS / EDIT # 15

LEGEND	
PART NO.	REV
7018801-00	A1
7018801-01	A1

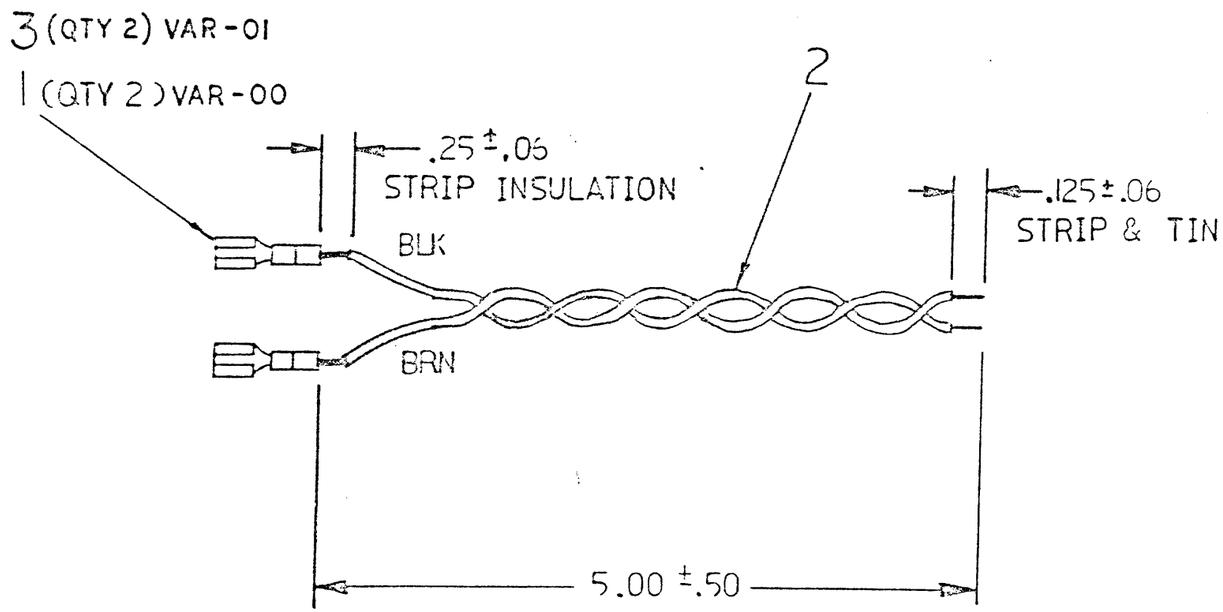

CAUTION: SEE OFF SHEET PARTS LIST
K-PL-7018801-0-0

REVISION HISTORY		
DATE	ECO NUMBER	REV.
	7018799-MX003	B

T. Hunnicutt 4-3-85
M. LAWRENCE
M. G. Graham 7-22-85

DESCRIPTION	DRAWING NO.	PART NO	ITEM NO

UNLESS OTHERWISE SPECIFIED DIMENSIONS ARE IN INCHES AND THE FOLLOWING TOLERANCES APPLY (PER DEC STD 114)

INCHES TOLERANCES	ANGLES 0° 30'	APPLICABLE DIMENSION RANGE (CHECK ONE)	DIMENSIONS RANGE IN INCHES					
			OVER 0 TO 0.2	OVER 0.2 TO 1.2	OVER 1.2 TO 4.0	OVER 4.0 TO 12.0	OVER 12.0 TO 40.0	OVER 40.0 TO 63.0
X = ±.1	SURFACE QUALITY	☐	±.02		±.01	±.05	±.10	
XX = ±.02	✓	☐	±.004	±.003	±.012	±.015	±.004	±.01
XXX = ±.005	MICROINCHES	☐						

QUANTITY & VARIATION

THIRD ANGLE PROJECTION

DO NOT SCALE DRAWING

REMOVE BURRS AND BREAK SHARP CORNERS

MATERIAL: SEE PARTS LIST

FINISH

DRN		DATE 7JUN82
CHKD		DATE 11-16-82
DES. ENG.		DATE 11/16/82
REQ. ENG.		DATE 11/16/82
MTG. ENG.	Donald R. Duncan	DATE 25-OCT-82
NEXT HIGHER ASSY	D-AD-7018799-0-0	

TITLE: CKT BKR JUMPER WIRE ASSY

DOCUMENT NUMBER

SIZE	CODE	NUMBER	REV
B	IA	7018801-0-0	B

SCALE 1/1 SHEET 1 OF 1

DRB 1008

TW

DRAWING DIRECTORY

ITEM	DRAWING NO.	NO. OF SHTS	PART NO.	DESCRIPTION	TYPE	REVISIONS										
1			5415552-00	SURGE CURRENT LIMITER			A1	B1	B2	B2						
2	D-UA-5415552-0-C	1		SURGE CURRENT LIMITER		A	B	C	D	D						
3	K-PL-5415552-0-DBP	1		SURGE CURRENT LIMITER		A	A	B	C	C						
4	K-PC-5415552-0-DBI	-		P.C. DATA BASE		A	B	B	B	B						
5	K-CS-5415552-0-DBS	-		SUDS DATA BASE		A	B	C	C	C						
6	K-CS-5415552-0-1	1		SURGE CURRENT LIMITER		A	B	C	C	D						
7	K-DD-5015551-0-0	1		DRAWING DIRECTORY		-	-	REF	REF	REF						

NOTES:

DD REV	A	B	C	D	E						

REVISION HISTORY			CONT. REVISION HISTORY		
ENG	ECO NUMBER	REV	ENG	ECO NUMBER	REV
	5415552-TW001	B			
CC	5415552-MK002	C			
ML	5415552-MK003	D			
ML	5415552-MK004	E			

MADE BY: T. WALSH
DATE: 01 SEP 82

CHECKED BY: T. WALSH
DATE: 01 SEP 82

DESIGN ENGINEER: M. STECKLER
DATE: 12 DEC 82

RESPONSIBLE ENG: M. STECKLER
DATE: 12 DEC 82

PRODUCTION ENG: D. DUNCAN
DATE: 12 DEC 82

d i g i t a l

TITLE DRAWING DIRECTORY

SURGE CURRENT LIMITER

SIZE	CODE	DOCUMENT NUMBER	REV.
K	DD	5415552-0-0	E

SHEET 1 OF 1 MKO

COMPONENT SIDE VIEW

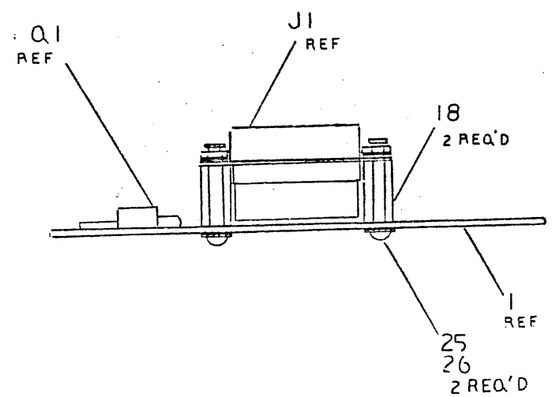

VIEW A-A
SCALE· 2/1

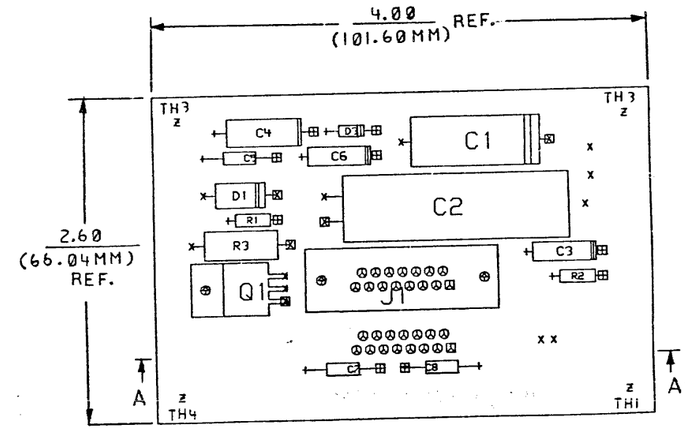

CHK	DRAWN BY	ENGINEER	CHANGE NO	DATE	REV
	A KRAWIECKI	C CARROLL	5415552-MK	30-JAN-85	C
			5415552-MK3	30-JAN-86	D

CHK	DRAWN BY	ENGINEER	CHANGE NO	DATE	REV

NOTES:
1. ~~LOCKING POSTS ARE ASSEMBLED USING TWO (2) FLAT WASHERS. DO NOT USE LOCK WASHERS.~~

STEP E	↑ Y AXIS 2.60 STEP 3 TIMES
REPEAT	→ X AXIS 4.00 STEP 3 TIMES

ETCH REV. B1-P2

SIGNATURES		DATE
DRN.	A. KRAWIECKI	1/30/85
CHK'D		3-28-85
MECH.ENG.		3-28-85
PROJ.ENG.		3-25-85
PROD.		3-25-85
SCALE 2/1		
SHT. 1 OF 1		
NEXT HIGHER ASSY. K-DD-5415552-0		

digital

TITLE SURGE CURRENT LIMITER

SIZE	CODE	NUMBER	REV
D	UA	5415552-0-0	D

MKO 1 WO#302327

AUTOMATED BY VAXKPL (V1.0)

P A R T S L I S T

LINE	ITEM	TOP DOCUMENT	PART NUMBER	MIN REV	DESCRIPTION	QTY PER VAR/REV 00 B2	REFERENCE DESIGNATORS
1	1	D-MD-5015551-0-0	50-15551-00		DRILL AND ETCH	1	
2	2		10-01776-00		1 MFD 35V 10% S.TANT	2	C3,C6
3	3		10-02781-00		100 MFD 25V +75-10% AL EL	1	C1
4	4		10-05784-00		.01 MFD 100V 200V 10% MYLR	1	C4
5	5		10-13466-22		.1 MFD 50V +80-20% Z5U CER	1	C5
6	6		10-18584-01		560 MFD 20V+100-20% AL EL	1	C2
7	7		11-00114-00		PIV= 25 IO=135 MA	1	D3
8	8		11-10864-00		LED 2MCD@10MA	1	D2
9	9		11-14602-00		RECT,ULTRA FAST PIV= 100 IO= 4.0	1	D1
10	10		13-03312-00		10.0 K .25 W 1.0 % RN55D-F10	1	R1
11	11		13-13589-00		1.40 K .25 W 1.0 % RN55D-F10	1	R2
12	12		13-19255-10		18.0 1.0 W 5.0 % M.OXIDE	1	R3
13	13	BLANK			*** THIS ITEM IS NOT USED ***	-	
14	14	BLANK			*** THIS ITEM IS NOT USED ***	-	
15	15		12-21634-01		CONN,D SUB 15PIN ASSY STRAIGHT P	1	J1
16	16		15-20353-01		SCR PIV= 50 IO= 8.00A	1	Q1
17	17	BLANK			*** THIS ITEM IS NOT USED ***	-	
18	18	BLANK			*** THIS ITEM IS NOT USED ***	-	
19	19	BLANK			*** THIS ITEM IS NOT USED ***	-	
20	20	BLANK			*** THIS ITEM IS NOT USED ***	-	
21	21	BLANK			*** THIS ITEM IS NOT USED ***	-	
22	22	BLANK			*** THIS ITEM IS NOT USED ***	-	
23	23	BLANK			*** THIS ITEM IS NOT USED ***	-	
24	24		10-12784-00		.047 MFD 50V +80-20% CER	2	C7,C8
25	25		90-00037-03		WASHER,LOCK INTERNAL STEEL	2	
26	26		90-08032-01		SCREW,MACH PAN PHIL 4-	2	

REVISION HISTORY

ENG	ECO NUMBER	REV
	INITIAL	A
ML	5415552-MK002	B
ML	5415552-MK003	C

KPL MODULE FORMAT | SECTION A OF A

SECTION/VARIATION INDEX

[A]	00	[M]	
[B]		[N]	
[C]		[P]	
[D]		[Q]	
[E]		[R]	
[F]		[S]	
[H]		[T]	
[J]		[V]	
[K]		[W]	
[L]		[Y]	

DRN: P. GROSSE
DATE: 16-JUN-82
CHK'D: F. GAROFALO
DATE: 16-JUN-82
DES.ENG: R. GRAHAM
DATE: 16-JUN-82
RESP.ENG.: M.LAWRENCE
DATE: 25-MAR-85
MFG.ENG: W.BROOKE
DATE: 25-MAR-85

D I G I T A L

TITLE PARTS LIST
SURGE CURRENT LIMITER

SIZE	CODE	DOCUMENT NUMBER	REV
K	PL	5415552-0-0	C

RELEASE DATE: 28-JAN-86
RELEASE STATUS: RELEASED

BASIC PART NUMBER:	ASSEMBLY NUMBER:	TOP DOCUMENT NUMBER:	FILE NAME:	EDIT #
5415552	D-UA-5415552-0-0	K-DD-5415552-0	MK1277.PLS	3

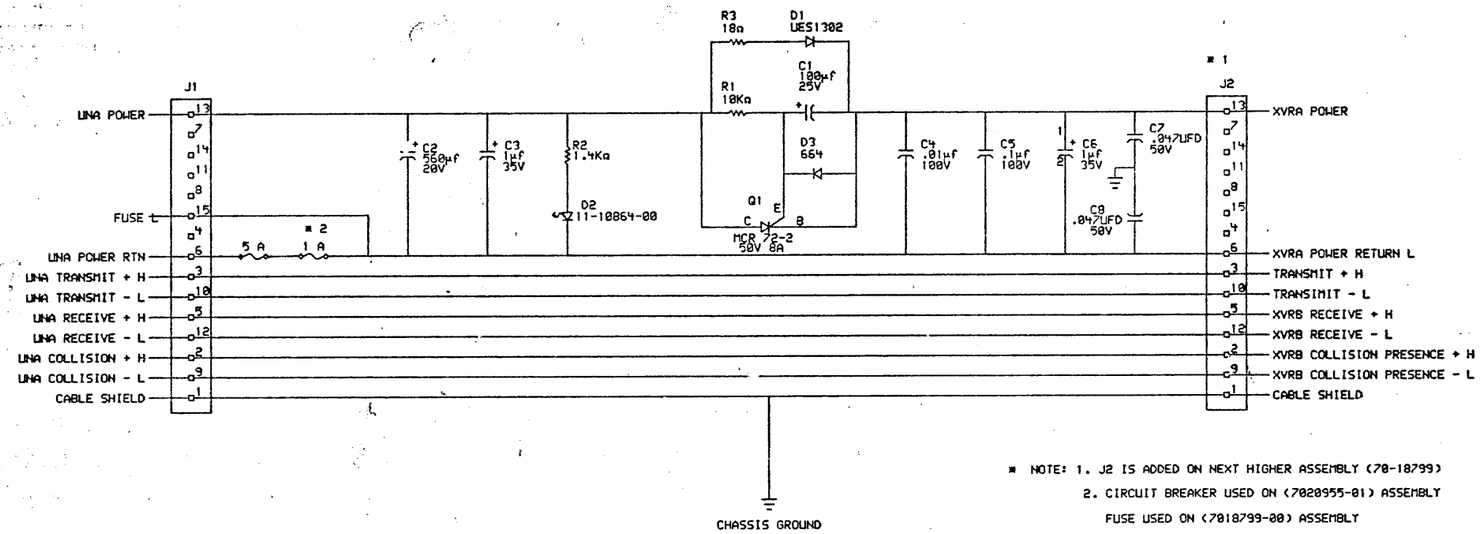

* NOTE: 1. J2 IS ADDED ON NEXT HIGHER ASSEMBLY (70-18799)
2. CIRCUIT BREAKER USED ON (7020955-01) ASSEMBLY
FUSE USED ON (7018799-00) ASSEMBLY

REVISIONS		
CHK	CHANGE NO.	REV
	MK004	D

digital

DRN. SARGENT — DATE 15-MAY-86
CHK'D D. DE GRASSE — DATE 15-MAY-86
ENG. R.GRAHAM — DATE 15-MAY-86
BOARD LOCATION:
SHEET 1 OF 1
XTRA:<DENSMORE>UNABUL.DRW 15-MAY-86 10:02
FIRST USED ON OPTION/MODEL: DEUNA
NEXT HIGHER ASSEMBLY: D-UA-5415552-0-0

TITLE: UNA BULKHEAD SURGE CURRENT LIMITER

SIZE	CODE	NUMBER	REV.
K	CS	5415552-0-0	D

MKO

REV. D
NUMBER 5415552-0-0
CODE CS
SIZE K

FIELD MAINTENANCE PRINT SET

TABLE OF CONTENTS

UNIT VARIATIONS COVERED BY THIS PRINT SET
MS11-PB

MS11-P

Field Maintenance Print Set

Digital Equipment Corporation

MP01477

REV. A

NUMBER MS11-P-1

CODE TC

SIZE B

REVISIONS		
REV	A	
CHG. NO.	ORIGINATED	
DATE	9/28/82	

USED ON OPTION/MODEL	
11/44	
11/24	

SHEET 1 OF 1

DRN. P. Bossman	DATE 13 AUG 82	TITLE: MS11-P MEMORY
CHK'D P. Bossman	DATE 13 AUG 82	
PROJ. ENG. James R. Janetis	DATE 24 Sept 82	
FIELD SERV. Serge Martel	DATE 24 Sept. 82	

digital

SIZE	CODE	NUMBER	REV.
B	TC	MS11-P-1	A

DIST.

DRB 124

ML2

SIZE	CODE	NUMBER	REV.
B	DD	M8743-BA	J

DRAWING NO.	NO. OF SHTS.	PART NO.	DESCRIPTION	A	B	C	D1	E1	E2	F1	F2
		M8743-BA	MS11-P MEMORY	A	B	C	D	—	D	—	E
D-UA-M8743-BA-0	2		MS11-P MEMORY								
		5015117-00	ETCHED BOARD	C	C	C	D1	C	D1	C	D1
K-CS-M8743-BA-MS01	1		MS11-P MEMORY	A	B	B	C	C	C	C	C
K-CS-M8743-BA-MS02	1		MS11-P MEMORY	A	A	A	B	B	B	B	B
K-CS-M8743-BA-MS03	1		MS11-P MEMORY	A	A	A	A	A	A	A	A
K-CS-M8743-BA-MS04	1		MS11-P MEMORY	A	A	A	B	B	B	B	B
K-CS-M8743-BA-MS05	1		MS11-P MEMORY	A	A	B	C	B1	D	B1	D
K-CS-M8743-BA-MS06	1		MS11-P MEMORY	A	A	A	A	B	B	B	B
K-CS-M8743-BA-MS07	1		MS11-P MEMORY	A	A	A	B	B	B	B	B
K-CS-M8743-BA-MS08	1		MS11-P MEMORY	A	A	A	B	C	C	D	D
K-CS-M8743-BA-MS09	1		MS11-P MEMORY	A	A	A	A	A	A	A	A
K-CS-M8743-BA-MS10	1		MS11-P MEMORY	A	A	A	A	A	A	A	A
K-CS-M8743-BA-MS11	1		MS11-P MEMORY	A	A	A	A	A	A	A	A
K-CS-M8743-BA-MS12	1		MS11-P MEMORY	A	A	A	A	A	A	A	A
K-CS-M8743-BA-MS13	1		MS11-P MEMORY	A	A	B	C	C	C	C	C
K-PC-M8743-BA-DBG	-		P.C. DESIGN DATA BASE	A	A	A	B	A	B	A	B
K-PL-M8743-BA-DBP	4		PARTS LIST DATA BASE (Z2712A)	A	A	A	B	—	C	—	C
K-CS-M8743-BA-DBS	-		SCHEMATIC DATA BASE (SUDS)	A	B	C	D	E	F	H	J
B-DD-5015117-0	1		DRAWING DIRECTORY	—	—	—	A	B	C	D	D
C-UA-M8743-BA-0	2		MS11-P MEMORY	—	—	—	—	C1	—	C2	—
B-PL-M8743-BA-0	4		PARTS LIST	—	—	—	—	A1	—	A1	—

REVISIONS

REV.	CHG NO.	DATE
A	ORIG.	4/82
B	SH001	12/82
C	SH002	4/83
D	SH003	5/83
E	SH004	11/83
F	SH005	2/84
H	SH006	5/84
J	SH007	7/84

NOTES:

1. Revision codes for Drawing K-CS M8743-BA-MS05 and part 5015117-0 are purposely out of sequence, so that their revision codes correspond to the module revision at the top of the column.
2. "-" in revision code means: "This line item does not describe this module revision.

digital

USED ON OPTION/MODEL	
11/44	
11/24	

DRN.		13 AUG 82
CHK'D		13 JAN 83
ENG.		28 JUN 83
PROD.		10 SEPT 83

TITLE MS11-P MEMORY

SIZE	CODE	NUMBER	REV.
B	DD	M8743-BA	J

SHEET 1 OF 1

SHO

AUTOMATED BY PRTLST.3P(44)

P A R T S L I S T

LINE	ITEM	TOP DOCUMENT	PART NUMBER	MIN REV	DESCRIPTION	QTY PER VARIATION BC	BF	BH	BB E2	REFERENCE DESIGNATOR
					VARIATION REVISION LEVEL:					
1	1	B-DD-M8743-BA			DWG DIRECTORY	REF	REF	REF	REF	
2	2	D-UA-M8743-BA-0			UNIT ASSY	REF	REF	REF	REF	
3	3	D-MD-5015117-0-0			CIRCUIT DRILL & ETCH	REF	REF	REF	REF	
4	4	D-EC-5015117-BA-0			ETCH CUT DWG	REF	REF	REF	REF	
5	5	K-CS-M8743-BA-MS01			CIRCUIT SCHEMATIC	REF	REF	REF	REF	
6	6		1105275-00		PIV= 60 IO=300 MA -15NS	1	1	1	1	D1
7	7		5015117-00		DRILL AND ETCH BRD.	1	1	1	1	
8	8		1005306-00		6.8MFD 35V 10% S.TANT	1	1	1	1	C1
9	9		1012084-03		150 MFD 15V +75-10% AL EL	2	2	2	2	C5,C6
10	10		1018200-00		220.0 MMF 50V 1% CER	2	2	2	2	C2,C3
11	11		1014265-02		.33 MFD 50V +80-20% CER	142	142	142	142	C4,C7-C147
12	12		1117373-00		LED ASSY GREEN	1	1	1	1	D3
13	13		1117373-01		LED ASSY RED	1	1	1	1	D2
14	14		1211164-00		SW,DIP 4POS/1PST 5VDC100MA F	1	1	1	1	E28
15	15		1211164-04		SW,DIP 08POS/1PST 5VDC100MA F	1	1	1	1	E38
16	16		1216988-02		HANDLE,MODULE,HEX TWO EJECTORS	1	1	1	1	
17	17		1300229-00		100.0 .25 W 5.0 % CF	2	2	2	2	R5,R22
18	18		1300316-00		470.0 .25 W 5.0 % CF	2	2	2	2	R3,R4
19	19		1300447-00		4.70 K .25 W 5.0 % CF	3	3	3	3	R11,R12,R18
20	20		1301322-00		180.0 .25 W 5.0 % CF	1	1	1	1	R19
21	21		1301808-00		22.0 K .25 W 5.0 % CF	1	1	1	1	R1
22	22		1302124-00		18.0 .25 W 5.0 % CF	1	1	1	1	R2
23	23		1302128-00		17.80 .50 W 1.0 % RN60E-F 2	1	1	1	1	R16
24	24		1302858-00		100.0 .25 W 1.0 % RN55D-F10	1	1	1	1	R7
25	25		1303064-00		75.0 .25 W 1.0 % RN55D-F10	1	1	1	1	R6
26	26		1304858-00		348.0 .25 W 1.0 % RN55D-F10	1	1	1	1	R8
27	27		1305123-00		*** THIS ITEM IS NOT USED ***	-	-	-	-	
28	28		1311522-00		200.0 .25 W 5.0 % CF	1	1	1	1	R13
29	29		1316395-00		R NETWORK 9-4.7K 2.0 % 10PIN	5	5	5	5	R14,R15,R23,R25,R26
30	30		1316395-02		R NETWORK 9-1.0K 2.0 % 10PIN	2	2	2	2	R17,R24

REVISION HISTORY			BASIC PART NO: M8743			
ENG	ECO NUMBER	REV	SECTION A OF A	DRN: J. RICHARD	DATE: 10-FEB-82	D I G I T A L
JJ	INITIAL	A	SECTION.VARIATION INDEX	CHK'D: P.BOSSMAN	DATE: 17-FEB-82	TITLE PARTS LIST MS11-P MEMORY
JSL	M8743-SH003	B	[A] BC,BF,BH,BB			
J.L	M8743-BA-SH005	C	[B]	DES.ENG: J. JANETOS	DATE: 17-FEB-82	DOCUMENT NUMBER
			[C]			SIZE K, CODE PL, NUMBER M8743-BA-DBP, REV C
			[D]			
			[E]			
			[F]	RESP.ENG.: J.LAVRANCHUK	DATE: 17-FEB-82	
			[H]			
			[J]			
			[K]	MFG.ENG.: R. HILL	DATE: 17-FEB-82	RELEASE DATE: 03-APR-84
			[L]			
			[M]	ASSEMBLY NUMBER:	TOP DOCUMENT NUMBER:	FILE NAME: Z2712C.PLS, EDIT # 7
			[N]	D-UA-M8743-BA-0	#B-DD-M8743-BA	

SHR

LINE	ITEM	TOP DOCUMENT	PART NUMBER	MIN REV	DESCRIPTION	QTY PER VARIATION BC	BF	BH	BB E2	REFERENCE DESIGNATOR
					VARIATION REVISION LEVEL:					
31	31		1317494-00		22.10 K .25 W 1.0 % RN55D-F10	2	2	2	2	R20,R21
32	32		1505321-00		DEC4258 PNP 200MW SI 12 30 M	2	2	2	2	Q1,Q2
33	33		1616653-01		DELAY= 100NS,10TAPS WITH TTLBU	1	1	1	1	E10
34	34		1909705-00		DEC 8881 NAND GATE-QUAD 2IN O	1	1	1	1	E27
35	35		1910534-00		74S04 INVERTER GATE-HEX 1I	1	1	1	1	E12
36	36		1910536-00		74S10 NAND GATE-TRIPLE 3IN	1	1	1	1	E5
37	37		1910540-00		74S22 NAND GATE-DUAL 4INPU	1	1	1	1	E3
38	38		1910542-00		74S64 A-O-I GATE 4-2-3-2	2	2	2	2	E9,E17
39	39		1910544-00		74S74 FF-D DUAL,EDGE TRIGG	1	1	1	1	E6
40	40		1910546-00		74S140 NAND GATE-DUAL 4INPU	1	1	1	1	E4
41	41		1910547-00		74S153 MUX 1 OF 4 (DUAL)	4	4	4	4	E49,E50,E55,E56
42	42		1910549-00		74S158 MUX 1 OF 2 (QUAD)	1	1	1	1	E45
43	43		1910550-00		74S174 FF-D HEX	1	1	1	1	E40
44	44		1911469-00		DEC 8640 RECEIVER,BUS,QUAD,U	2	2	2	2	E1,E54
45	45		1911579-00		8641 TRANSCEIVER,BUS,QUA	4	4	4	4	E7,E13,E18,E22
46	46		1911944-00		555CN TIMER,FUNCT.BLOCK	1	1	1	1	E47
47	47		1911983-00		74S133 NAND GATE-POSITIVE 1	1	1	1	1	E37
48	48		1912388-00		74S02 NOR GATE-QUAD 2IN,PO	1	1	1	1	E2
49	49		1912799-00		LS00 NAND-GATE-QUAD 2IN,P	1	1	1	1	E35
50	50		1912803-00		LS04 INVERTER GATE,HEX	1	1	1	1	E11
51	51		1912820-00		LS51 A-O-I GATE 2-WIDE 2I	1	1	1	1	E32
52	52		1912824-00		LS74 FF-D DUAL,EDGE TRIGG	1	1	1	1	E30
53	53		1912828-00		LS85 COMPARATOR,4BIT MAGN	1	1	1	1	E31
54	54		1912834-00		LS112 FF-JK,DUAL,EDGE TRIG	1	1	1	1	E8
55	55		1913340-00		74S32 OR GATE-QUAD 2IN	1	1	1	1	E26
56	56		1913670-00		74S373 LATCH,8BIT TRANS TRI	3	3	3	3	E14,E16,E19
57	57		1913777-00		LS240 DRIVER,LINE,OCTAL,T	1	1	1	1	E43
58	58		1913887-00		74S258 MUX 1 OF 2(QUAD)TRI	1	1	1	1	E21
59	59		1914451-00		LS393 COUNTER,BINARY,4BIT	2	2	2	2	E51,E57
60	60		1915219-00		LS373 FF-D OCTAL-TRANSPARE	2	2	2	2	E44,E46
61	61		1918822-00		2960 ERROR DETECTOR/CORRE	1	1	1	1	E15
62	62		1919004-00		DC 750 REGISTER,ADDRESS	1	1	1	1	E24
63	63		1919015-00		DC 021 BUS TRANSCEIVER,20PI	3	3	3	3	E36,E42,E48
64	64		1919095-00		2966PC DYNAMIC MEMORY DRIV	2	2	2	2	E61,E64
65	65		2118467-01		8264-20 RAM 64K X1,200NS 1	176	-	-	-	E100-E107,E110-E117,E120-E127,
									CONT	E130-E137,E140-E147,E150-E157,
									CONT	E160-E167,E170-E177,E180-E187,
									CONT	E190-E197,E200-E207,E210-E217,
									CONT	E220-E227,E230-E237,E240-E247,
									CONT	E250-E257,E260-E267,E270-E277,
									CONT	E280-E287,E290-E297,E300-E307,
									CONT	E310-E317
66	66		1919635-01		2965 DRIVER,DYNAMIC RAM	5	5	5	5	E59,E60,E62,E63,E65
67	67		9000024-01		EYELET,ROLLED 0.1210DX0.192	12	12	12	12	
68	68		9009185-00		JUMPER, WIRE, INSULATED, BLACK B	4	4	4	4	W1-W4
69	69		1301320-00		1.20 K .25 W 5.0 % CF	1	1	1	1	R10
70	70		1910544-01		74S74-60GG-D DUAL,EDGE TRIG	1	1	1	1	E41
71	71	2 EACH IC	1215006-06		SKT,IC 24PIN DIP TIN SOLD	4	4	4	4	XE24,XE15

DIGITAL	TITLE MS11-P MEMORY	SECTION A OF A	SIZE K	CODE PL	DOCUMENT NUMBER M8743-BA-DBP	REV C

AUTOMATED BY PRTLST.3P(44)

P A R T S L I S T

LINE	ITEM	TOP DOCUMENT	PART NUMBER	MIN REV	DESCRIPTION	QTY PER VARIATION BC	BF	BH	BB E2	REFERENCE DESIGNATOR
					VARIATION REVISION LEVEL:					
72	72		1219911-01		*** THIS ITEM IS NOT USED ***	-	-	-	-	
73	73		23061D2-00		D2-02	1	1	1	1	E20
74	74		23062D2-00		D2-02	1	1	1	1	E25
75	75		23063D2-00		D2-02	1	1	1	1	E29
76	76		23064D2-00		D2-02	1	1	1	1	E34
77	77		23086B1-00		B1-03	1	1	1	1	E33
78	78		23087B1-00		B1-03	1	1	1	1	E39
79	79		23344A1-00		A1-05	1	1	1	1	E58
80	80		2118470-01		4864-1 MOS RAM 64K X1,200	-	176	-	-	E100-E107,E110-E117,E120-E127,
									CONT	E130-E137,E140-E147,E150-E157,
									CONT	E160-E167,E170-E177,E180-E187,
									CONT	E190-E197,E200-E207,E210-E217,
									CONT	E220-E227,E230-E237,E240-E247,
									CONT	E250-E257,E260-E267,E270-E277,
									CONT	E280-E287,E290-E297,E300-E307,
									CONT	E310-E317
81	81		2118472-01		4164-2 MOS RAM 64K X1,200	-	-	176	-	E100-E107,E110-E117,E120-E127,
									CONT	E130-E137,E140-E147,E150-E157,
									CONT	E160-E167,E170-E177,E180-E187,
									CONT	E190-E197,E200-E207,E210-E217,
									CONT	E220-E227,E230-E237,E240-E247,
									CONT	E250-E257,E260-E267,E270-E277,
									CONT	E280-E287,E290-E297,E300-E307,
									CONT	E310-E317
82	82	K-CS-M8743-BA-MS02			CIRCUIT SCHEMATIC	REF	REF	REF	REF	
83	83	K-CS-M8743-BA-MS03			CIRCUIT SCHEMATIC	REF	REF	REF	REF	
84	84	K-CS-M8743-BA-MS04			CIRCUIT SCHEMATIC	REF	REF	REF	REF	
85	85	K-CS-M8743-BA-MS05			CIRCUIT SCHEMATIC	REF	REF	REF	REF	
86	86	K-CS-M8743-BA-MS06			CIRCUIT SCHEMATIC	REF	REF	REF	REF	
87	87	K-CS-M8743-BA-MS07			CIRCUIT SCHEMATIC	REF	REF	REF	REF	
88	88	K-CS-M8743-BA-MS08			CIRCUIT SCHEMATIC	REF	REF	REF	REF	
89	89	K-CS-M8743-BA-MS09			CIRCUIT SCHEMATIC	REF	REF	REF	REF	
90	90	K-CS-M8743-BA-MS10			CIRCUIT SCHEMATIC	REF	REF	REF	REF	
91	91	K-CS-M8743-BA-MS11			CIRCUIT SCHEMATIC	REF	REF	REF	REF	
92	92	K-CS-M8743-BA-MS12			CIRCUIT SCHEMATIC	REF	REF	REF	REF	
93	93	K-CS-M8743-BA-MS13			CIRCUIT SCHEMATIC	REF	REF	REF	REF	
94	94		9105740-55		WIRE(WRAP) 30AWG KYNAR UL14	A/R	A/R	A/R	A/R	
95	95		1921306-01		74F02 NOR GATE,QUAD,2-IN	1	1	1	1	E23
96	96		2118995-01		64K MOS RAM 200NS 1	-	-	-	176	E100-E107,E110-E117,E120-E127,
									CONT	E130-E137,E140-E147,E150-E157,
									CONT	E160-E167,E170-E177,E180-E187,
									CONT	E190-E197,E200-E207,E210-E217,
									CONT	E220-E227,E230-E237,E240-E247,
									CONT	E250-E257,E260-E267,E270-E277,
									CONT	E280-E287,E290-E297,E300-E307,
									CONT	E310-E317

D I G I T A L	TITLE MS11-P MEMORY	SECTION A OF A	SIZE K	CODE PL	DOCUMENT NUMBER M8743-BA-DBP	REV C

LINE	ITEM	TOP DOCUMENT	PART NUMBER	MIN REV	DESCRIPTION	QTY PER VARIATION BC	BF	BH	BB	REFERENCE DESIGNATOR
					VARIATION REVISION LEVEL:				E2	

97 NOTE: M8743-BA IS THE PRIMARY VARIATION OF THE 512KX16 BITS SYSTEM (NOT A MODULE TYPE).
98 NOTE: M8743-BC IS A MODULE TYPE USING FUJITSU 64K MOS DEVICES.
99 NOTE: M8743-BF IS A MODULE TYPE USING HITACHI 64K MOS DEVICES.
100 NOTE: M8743-BH IS A MODULE TYPE USING NEC 64K MOS DEVICES.
101 NOTE: ON ITEM 71 USE 2 PER EACH IC
102 NOTE: THIS ASSEMBLY CONTAINS ITEMS SENSITIVE TO ELECTRO-STATIC DISCHARGE.
103 NOTE: MAINTAIN ANTI-STATIC PROTECTION PROCEDURES PER DEC STD 067.
104 NOTE: **********
105 NOTE: PART NUMBER 1016681-00 (HAND INSERT ONLY) MAY BE SUBSTITUTED FOR ITEM: 11,PART NUMBER 1014265-02
106 NOTE: (MACHINE INSERTABLE) WITH THE FOLLOWING RESTRICTION: C4,C7-C147 MUST ALL BE THE SAME PART NUMBER.

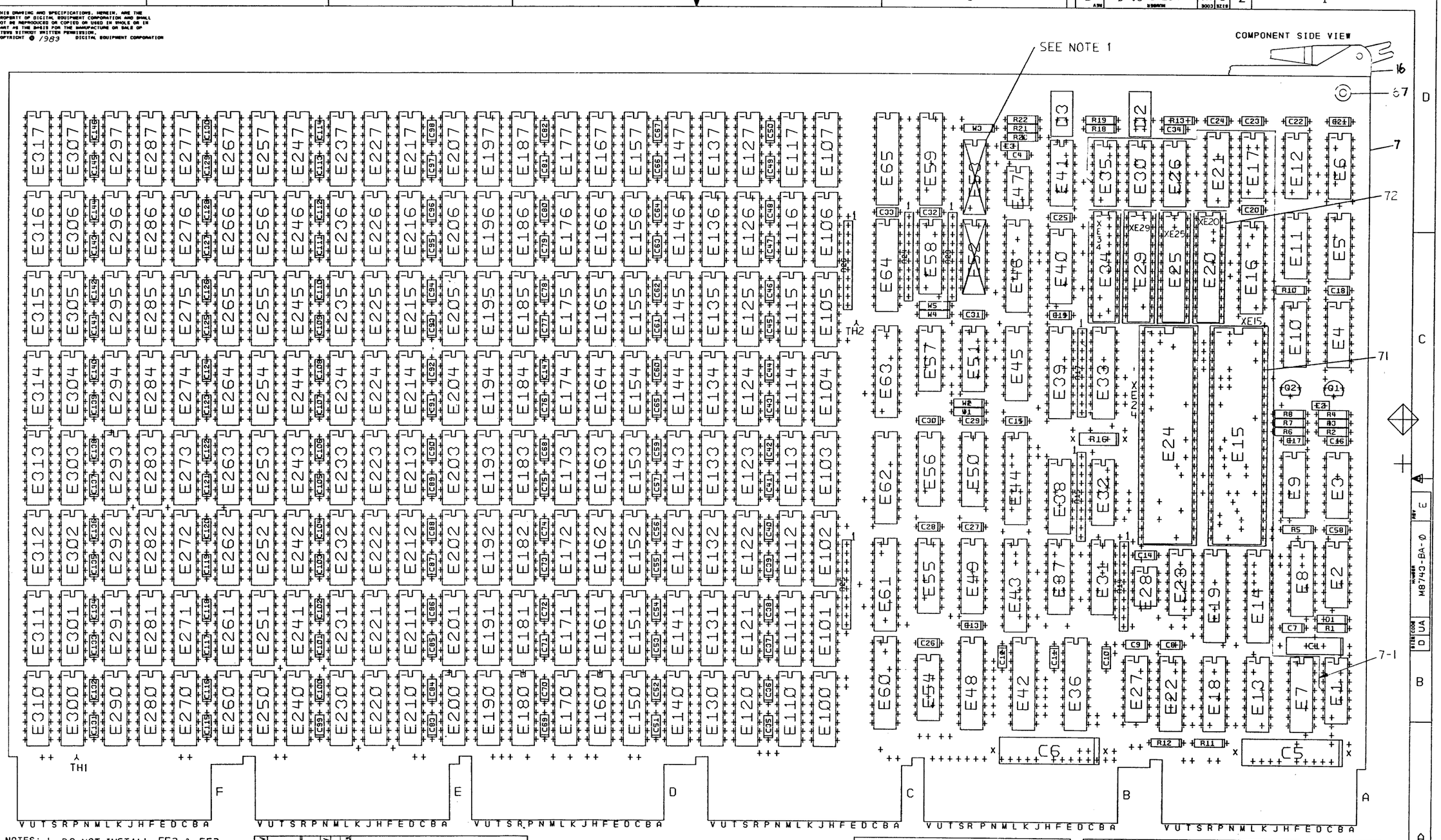

NOTES: 1. DO NOT INSTALL E52 & E53.

STEP E	↑ Y AXIS #___ STEP #___ TIMES
REPEAT	→ X AXIS #___ STEP #___ TIMES

CHK	CHANGE NO	REV
	PCDRAWN M8743-BA SH003	D
	M8743-BA- SH007	E

ETCH REV. D1-P1

SIGNATURES	DATE
DRN. D.DINGELDEIN	16-Mar-83
CHK'D.	27-6-83
MECH.ENG.	8-NOV-83
PROJ.ENG.	8-NOV-83
PROD. Beth Poore	8-NOV-83
SCALE 2/1	
SHT. 1 OF 2	
NEXT HIGHER ASSY. B-DD-M8743-BA	

digital

TITLE MSII-P MEMORY

SIZE	CODE	NUMBER	REV
D	UA	M8743-BA-0	E

SHO 1 MS#

REWORK INSTRUCTIONS:

ECO # 7, SIDE 1:

WIRE ADDS:

7-1. ADD WIRE FROM E1-4 TO E35-5 AS SHOWN.

REVISION HISTORY		
REV.	ECO NUMBER	DATE

TITLE MS11-P MEMORY

DOCUMENT NUMBER			
SIZE	CODE	NUMBER	REV.
D	UA	M8743-BA-Ø	E
SCALE —//—		SHEET 2 OF 2	

SHR

DRO 137C
EN-01264-16-REVA(396)

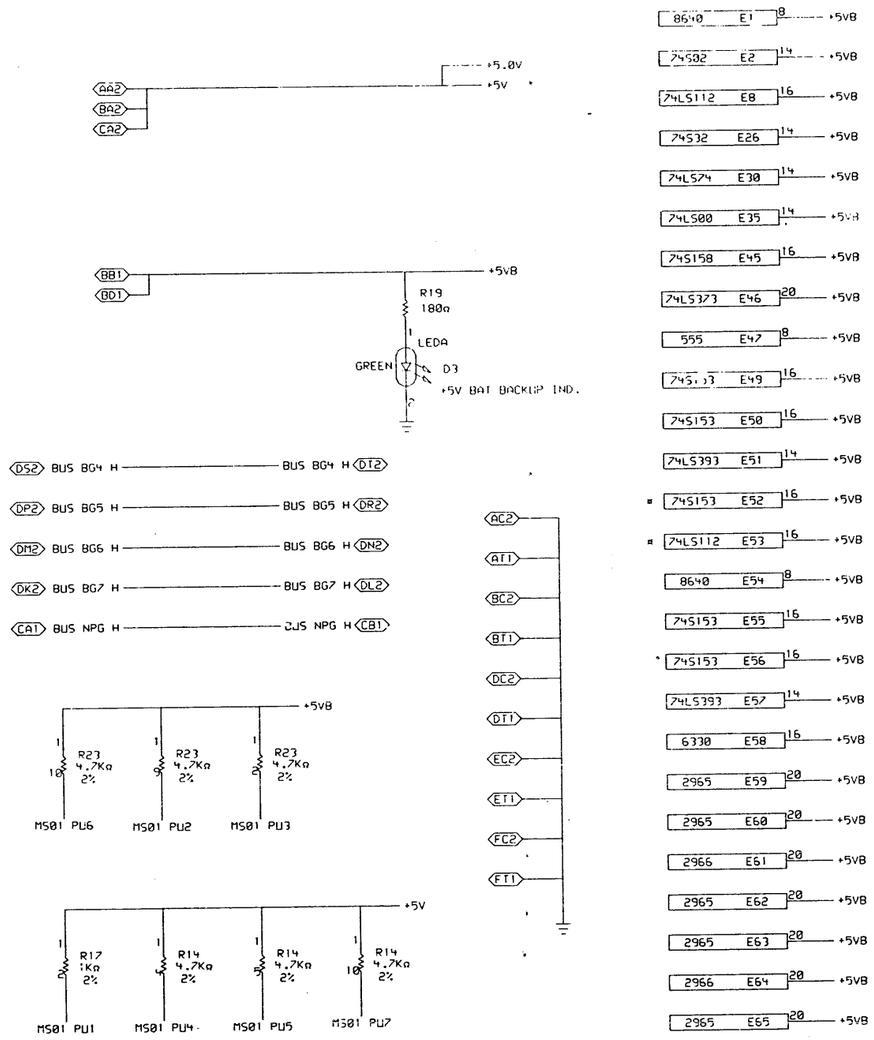

POWER DISTRIBUTION

8640	E1	8	+5VB
74S02	E2	14	+5VB
74LS112	E8	16	+5VB
74S32	E26	14	+5VB
74LS74	E30	14	+5VB
74LS00	E35	14	+5VB
74S158	E45	16	+5VB
74LS373	E46	20	+5VB
555	E47	8	+5VB
74S[illegible]3	E49	16	+5VB
74S153	E50	16	+5VB
74LS393	E51	14	+5VB
* 74S153	E52	16	+5VB
* 74LS112	E53	16	+5VB
8640	E54	8	+5VB
74S153	E55	16	+5VB
* 74S153	E56	16	+5VB
74LS393	E57	14	+5VB
6330	E58	16	+5VB
2965	E59	20	+5VB
2965	E60	20	+5VB
2966	E61	20	+5VB
2965	E62	20	+5VB
2965	E63	20	+5VB
2966	E64	20	+5VB
2965	E65	20	+5VB

STARTING ADDRESS DECIMAL (K)	OCTAL	SWITCH SETTINGS FOR E38 PA17	PA16	PA15	PA14
0	00000000				
8	00040000				X
16	00100000			X	
24	00140000			X	X
32	00200000		X		
40	00240000		X		X
48	00300000		X	X	
56	00340000		X	X	X
64	00400000	X			
72	00440000	X			X
80	00500000	X		X	
88	00540000	X		X	X
96	00600000	X	X		
104	00640000	X	X		X
112	00700000	X	X	X	
120	00740000	X	X	X	X

X = OFF (OPEN)

STARTING ADDRESS RANGE DECIMAL (K)	OCTAL	SWITCH SETTINGS FOR E38 PA21	PA20	PA19	PA18
128-248	01000000-01740000				X
256-376	02000000-02740000			X	
384-504	03000000-03740000			X	X
512-632	04000000-04740000		X		
640-760	05000000-05740000		X		X
768-888	06000000-06740000		X	X	
896-1016	07000000-07740000		X	X	X
1024-1144	10000000-10740000	X			
1152-1272	11000000-11740000	X			X
1280-1400	12000000-12740000	X		X	
1408-1528	13000000-13740000	X		X	X
1536-1656	14000000-14740000	X	X		
1664-1784	15000000-15740000	X	X		X
1792-1912	16000000-16740000	X	X	X	
1920-2040	17000000-17740000	X	X	X	X

TO OBTAIN INCREMENTAL 8K BOUNDARIES WITHIN THE SPECIFIED RANGE, REPEAT SWITCH SETTINGS FROM 0-120K TABLE.
X = OFF (OPEN)

CSR STARTING ADDRESS OCTAL	SWITCH SETTINGS FOR E28 CSRA3	CSRA2	CSRA1	CSRA0
17772100				
17772102				X
17772104			X	
17772106			X	X
17772110		X		
17772112		X		X
17772114		X	X	
17772116		X	X	X
17772120	X			
17772122	X			X
17772124	X		X	
17772126	X		X	X
17772130	X	X		
17772132	X	X		X
17772134	X	X	X	
17772136	X	X	X	X

X = OFF (OPEN)

SWITCH CONFIGURATION

NOTES:

1. CHIPS POWER AND GND PINS ARE ALL STANDARD EXCEPT 8640 (+5.B PIN 8, GND PIN 1) AND 4164 (+5VB PIN 8,GND PIN 16).
   ALL RESISTOR ARE 1/4W 5% EXCEPT AS NOTED ON SCHEMATIC.
2. * E52 AND E53 ARE FUTURE OPTION.

REVISIONS		
CHK	CHANGE NO.	REV

digital

DRN. S. ROCHEFORT DATE 13-MAR-83
CHK'D. P.BOSSMAN DATE 13-MAR-83
ENG. DATE 13-MAR-83
BOARD LOCATION:
SHEET 1 OF 1
NEXT HIGHER ASSEMBLY: B-DD-M8743-BA
FIRST USED ON OPTION-MODEL: MS11-P
13-APR-83 09:18

TITLE: MS11-P MEMORY

SIZE	CODE	NUMBER	REV.
K	CS	M8743-BA-MS01	C

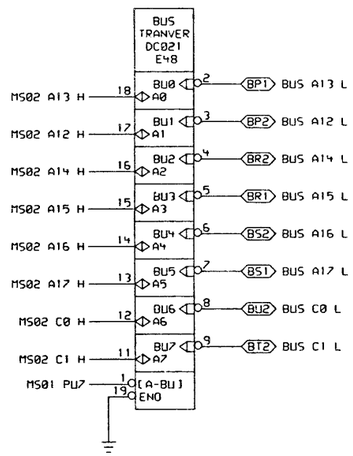

ADDRESS BUS RECEIVERS

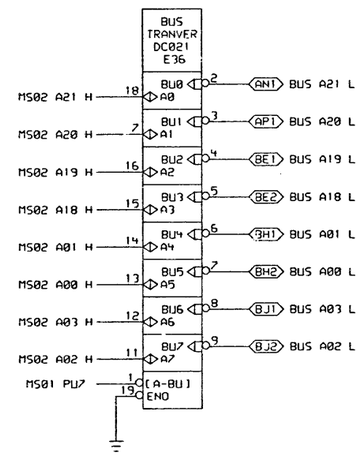

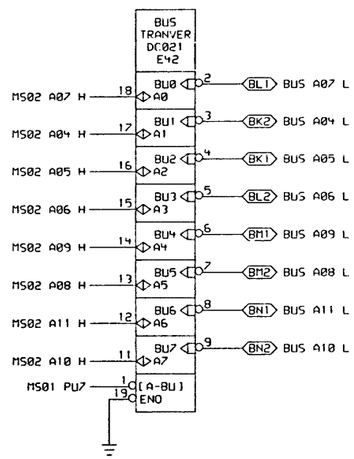

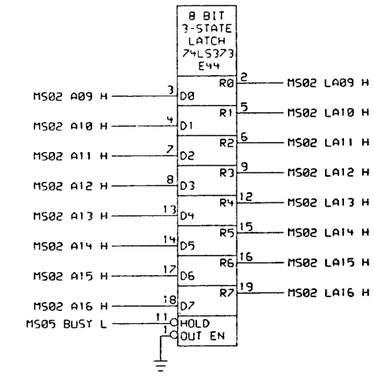

ADDRESS LATCHES

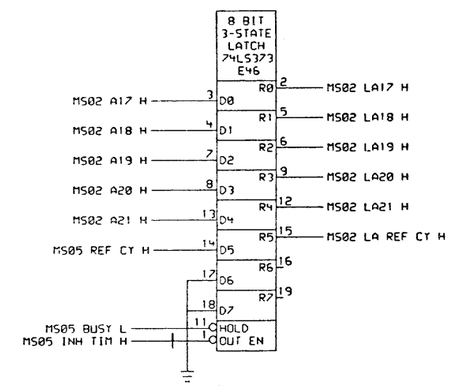

PAGE 2 OF 13

REVISIONS		
CHK	CHANGE NO.	REV

digital

DRN. S. ROCHEFORT DATE 13-MAY-83
CHK'D. P.BOSSMAN DATE 13-MAY-83
ENG DATE 13-MAY-83
BOARD LOCATION:
SHEET 1 OF 1
PAGE1 AVRANCHUK /MS11-P.ECO1.BA/MS2REV.DRW 13-APR-83 09:16
FIRST USED ON OPTION/MODEL: MS11-P
NEXT HIGHER ASSEMBLY: B-DD-M8743-BA

TITLE: MS11-P MEMORY

SIZE	CODE	NUMBER	REV.
K	CS	M8743-BA-MS02	B

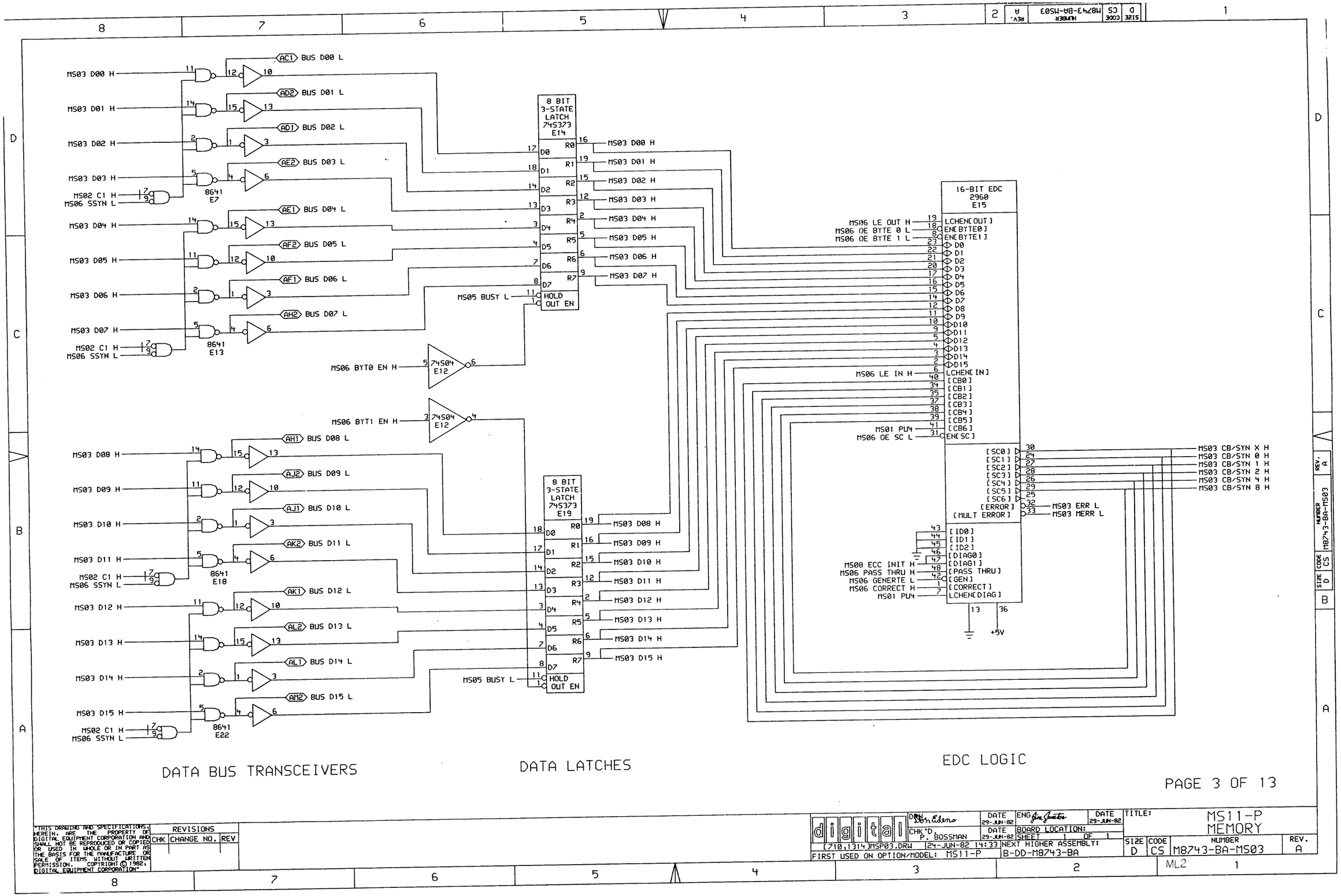

PAGE 3 OF 13

REVISIONS		
CHK	CHANGE NO.	REV

DRN Don Eldero DATE 29-JUN-82
CHK'D P. BOSSMAN DATE 29-JUN-82
ENG Jim Jacobs DATE 29-JUN-82
BOARD LOCATION:
SHEET 1 OF 1
NEXT HIGHER ASSEMBLY: B-DD-M8743-BA
[710,1314]MSP03.DRW 24-JUN-82 14:33
FIRST USED ON OPTION/MODEL: MS11-P

TITLE: MS11-P MEMORY

SIZE	CODE	NUMBER	REV.
D	CS	M8743-BA-MS03	A

ML2

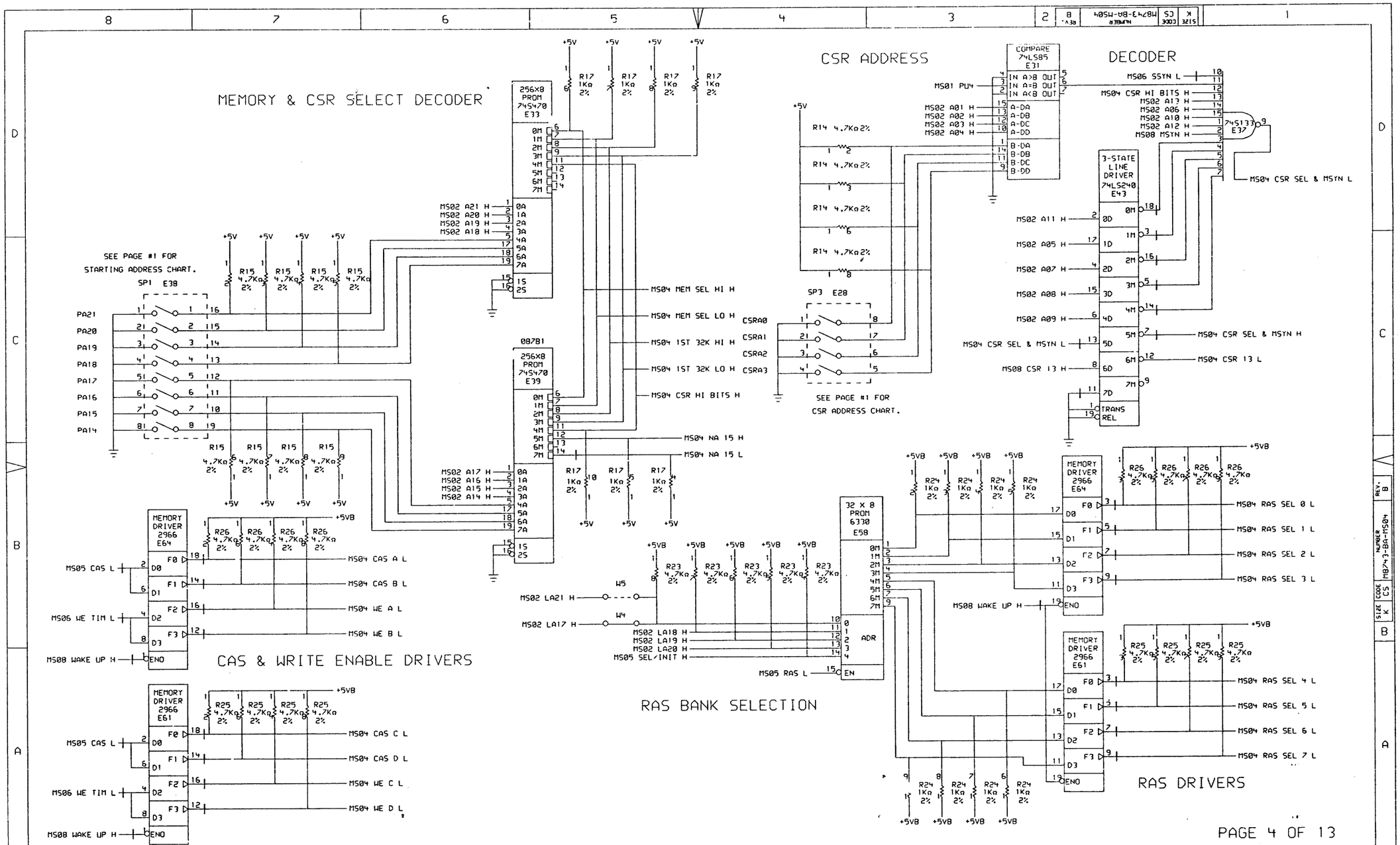

REVISIONS		
CHK	CHANGE NO.	REV

DRN. S. ROCHEFORT	DATE 13-MAR-83	ENG	DATE 13-MAR-83
CHK'D. P.BOSSMAN	DATE 13-MAR-83	BOARD LOCATION: SHEET 1 OF 1	
13-APR-83 09:09		NEXT HIGHER ASSEMBLY: B-DD-M8743-BA	
FIRST USED ON OPTION/MODEL: MS11-P			

TITLE: MS11-P MEMORY

SIZE	CODE	NUMBER	REV.
K	CS	M8743-BA-MS04	B

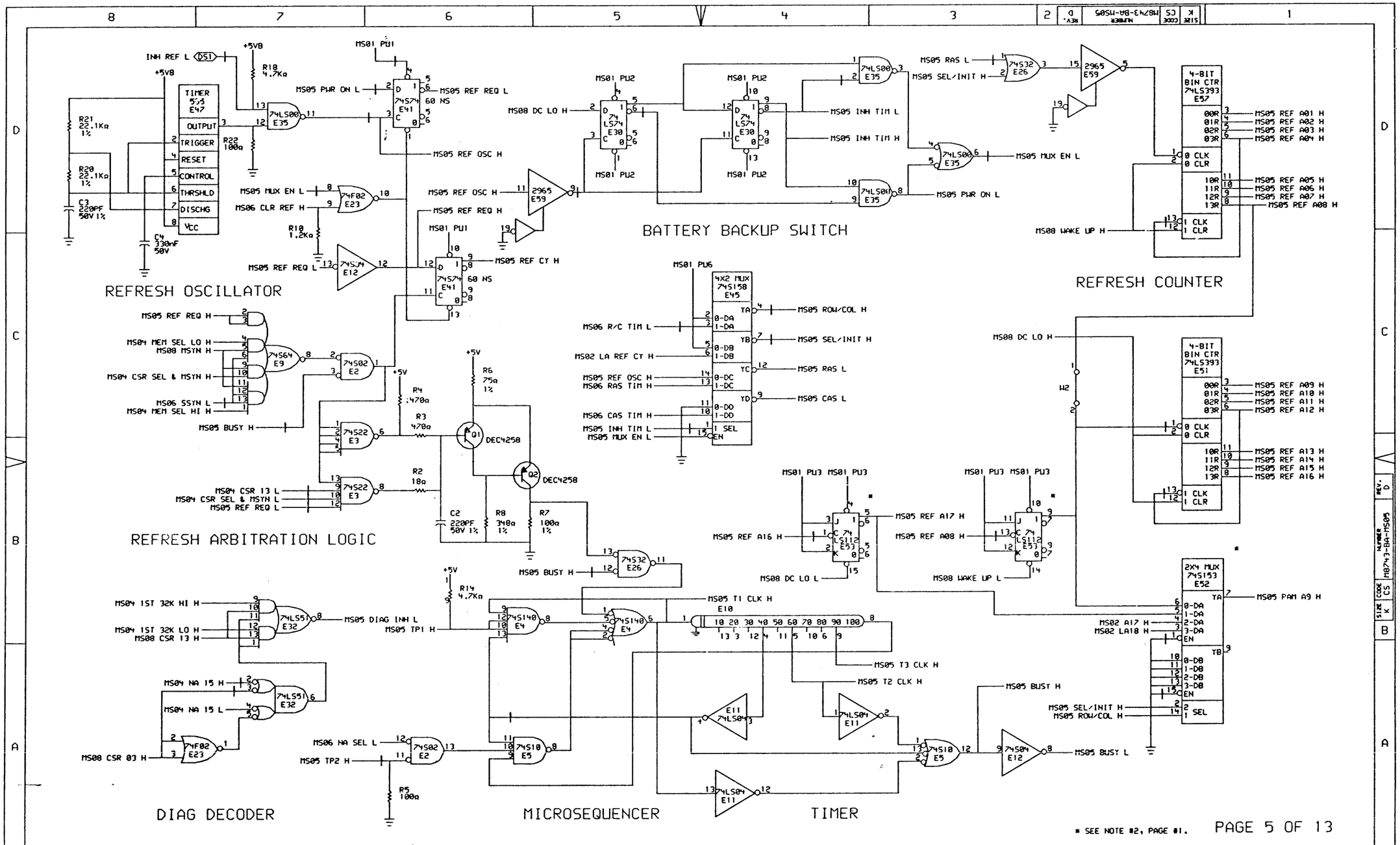

REVISIONS		
CHK	CHANGE NO.	REV

digital

DRN. JIM LAVRANCHUK 21-MAR-84
CHK'D. ROBERT KOPPENAL 21-MAR-84
ENG. JIM LAVRANCHUK 21-MAR-84
BOARD LOCATION: SHEET 1 OF 1
21-MAR-84 15:49
NEXT HIGHER ASSEMBLY: B-DD-M8743-BA
FIRST USED ON OPTION/MODEL: MS11-P

TITLE: MS11-P MEMORY

SIZE	CODE	NUMBER	REV.
K	CS	M8743-BA-MS05	D

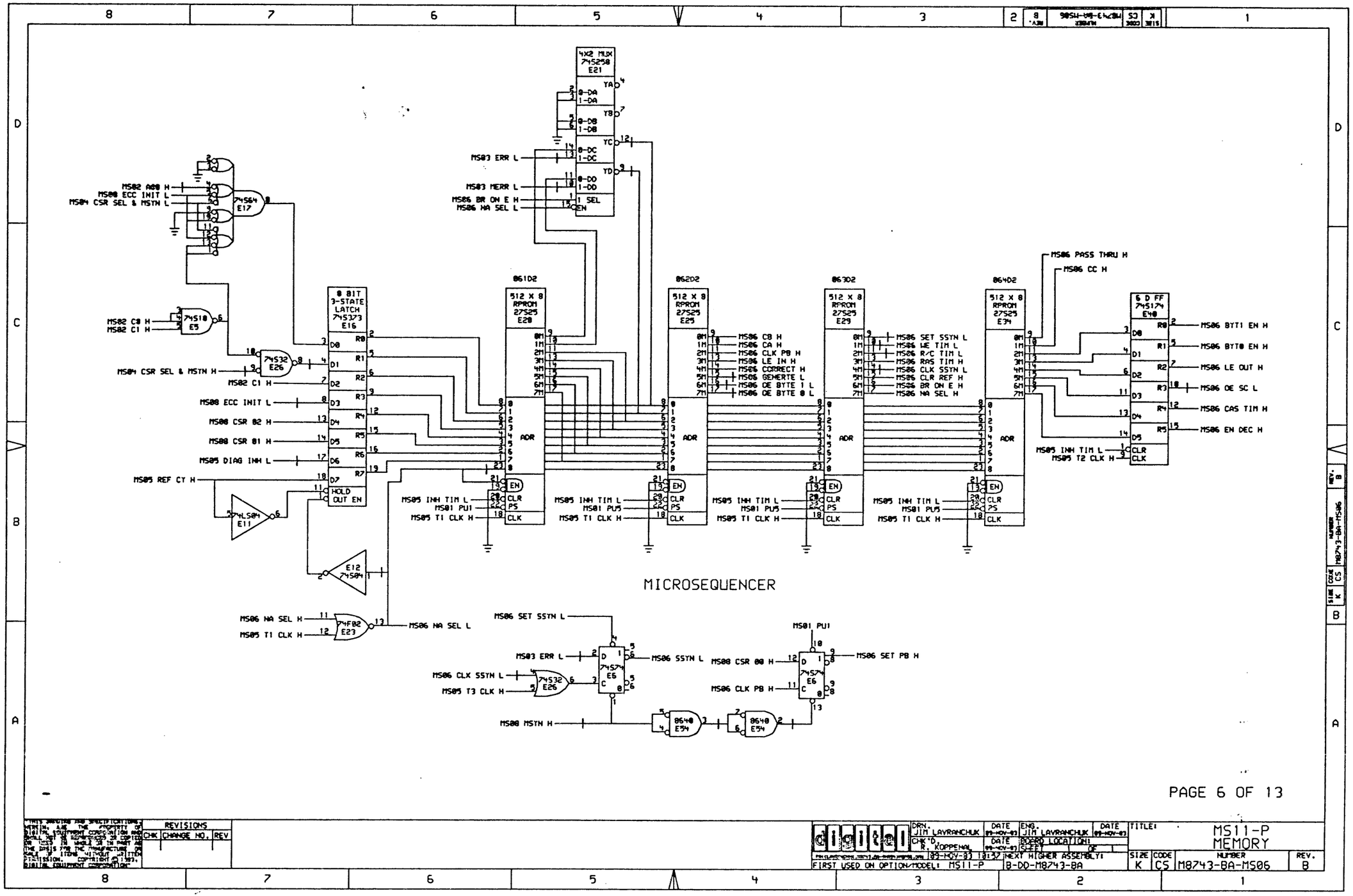

REVISIONS		
CHK	CHANGE NO.	REV

DRN. JIM LAVRANCHUK	DATE 09-NOV-83	ENG. JIM LAVRANCHUK	DATE 09-NOV-83
CHK'D R. KOPPENAL	DATE 09-NOV-83	BOARD LOCATION: SLOT 1 OF 1	
09-NOV-83 10:57		NEXT HIGHER ASSEMBLY: B-DD-M8743-BA	
FIRST USED ON OPTION/MODEL: MS11-P			

TITLE: MS11-P MEMORY

SIZE	CODE	NUMBER	REV.
K	CS	M8743-BA-MS06	B

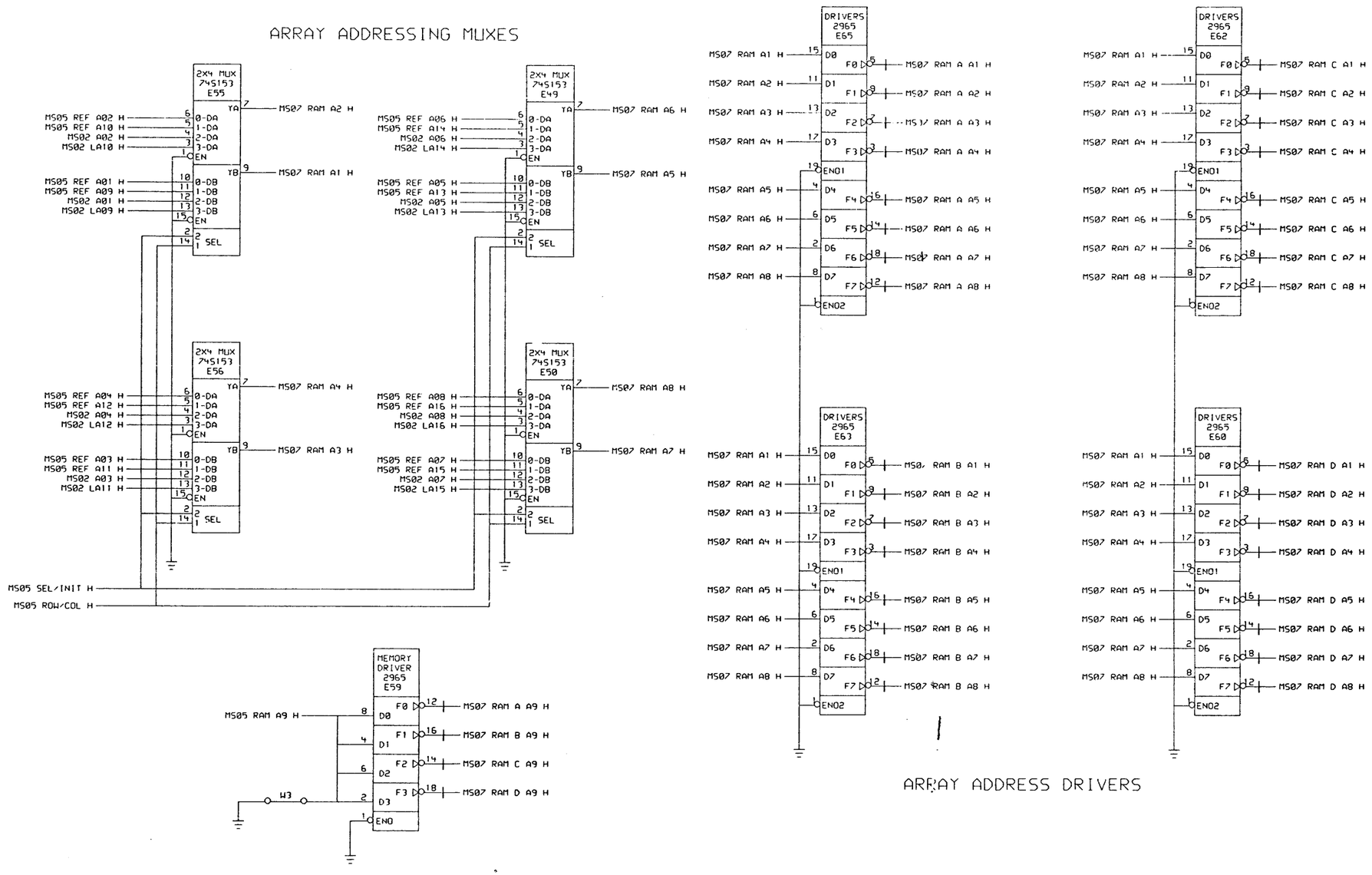

PAGE 7 OF 13

REVISIONS		
CHK	CHANGE NO.	REV

DRN. S. ROCHEFORT — DATE 13-MAY-83 — ENG — DATE 13-MAY-83
CHK'D. P. BOSSMAN — DATE 13-MAY-83 — BOARD LOCATION: SHEET 1 OF 1
PRELIMBRANCHER.MS11-P.ECO3.BA:MSPRF.DWG — 13-APR-83 09:04 — NEXT HIGHER ASSEMBLY: B-DD-M8743-BA
FIRST USED ON OPTION/MODEL: M511-P

TITLE: MS11-P MEMORY

SIZE	CODE	NUMBER	REV.
K	CS	M8743-BA-MS07	B

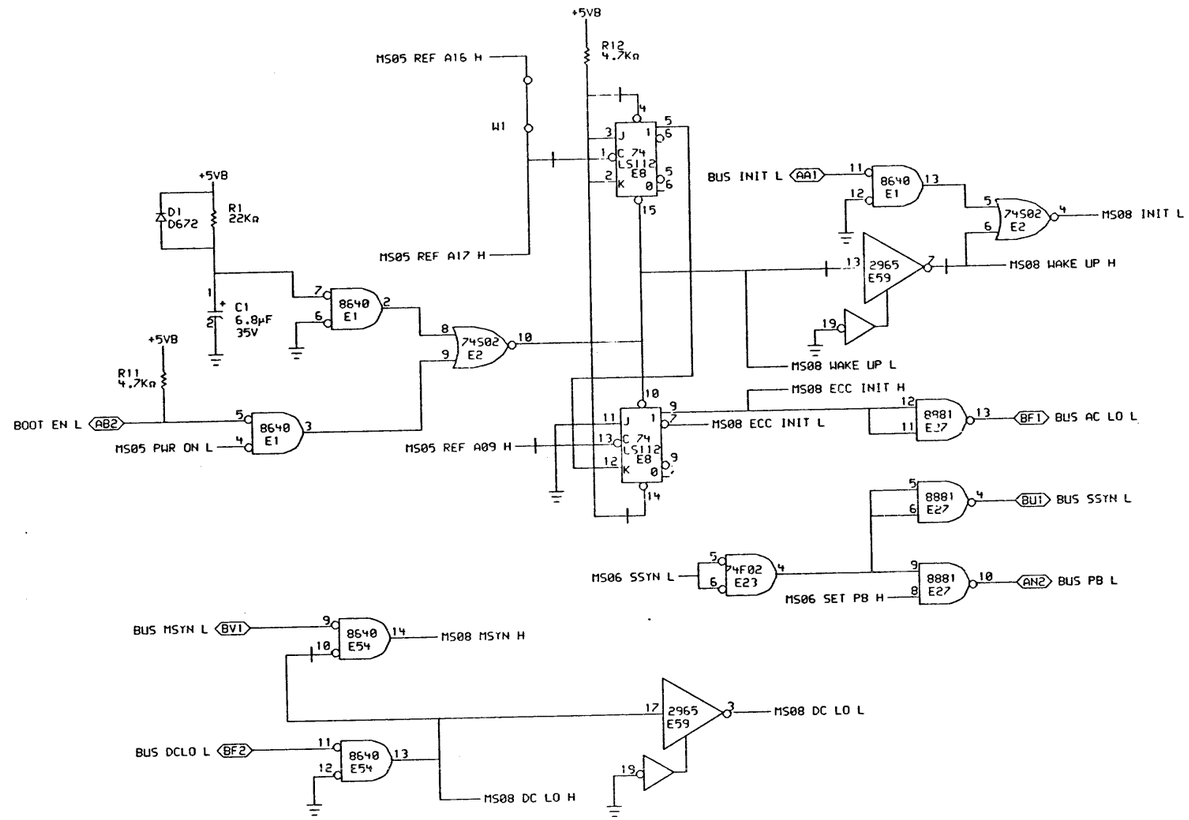

UNIBUS CONTROL LOGIC

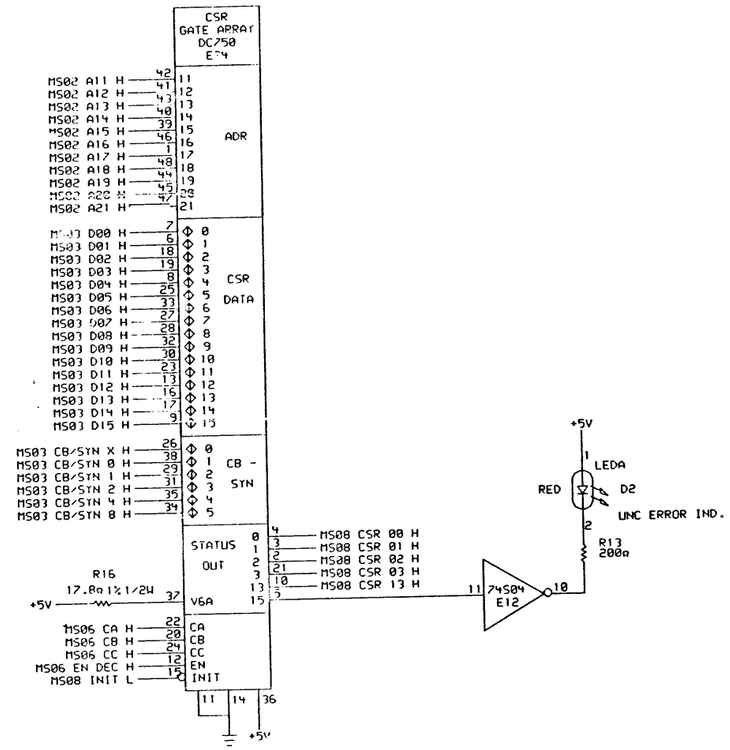

CSR LOGIC

PAGE 8 OF 13

REVISIONS		
CHK	CHANGE NO.	REV

digital

DRN. JIM LAVRANCHUK | DATE 12-MAR-84 | ENG. JIM LAVRANCHUK | DATE 12-MAR-84
CHK D. R. KOPPENAL | DATE 12-MAR-84 | BOARD LOCATION: | SHEET 1 OF 1
12-MAR-84 12:32 | NEXT HIGHER ASSEMBLY: B-DD-M8743-BA
FIRST USED ON OPTION/MODEL: MS11-P

TITLE: MS11-P MEMORY

SIZE	CODE	NUMBER	REV.
K	CS	M8743-BA-MS08	D

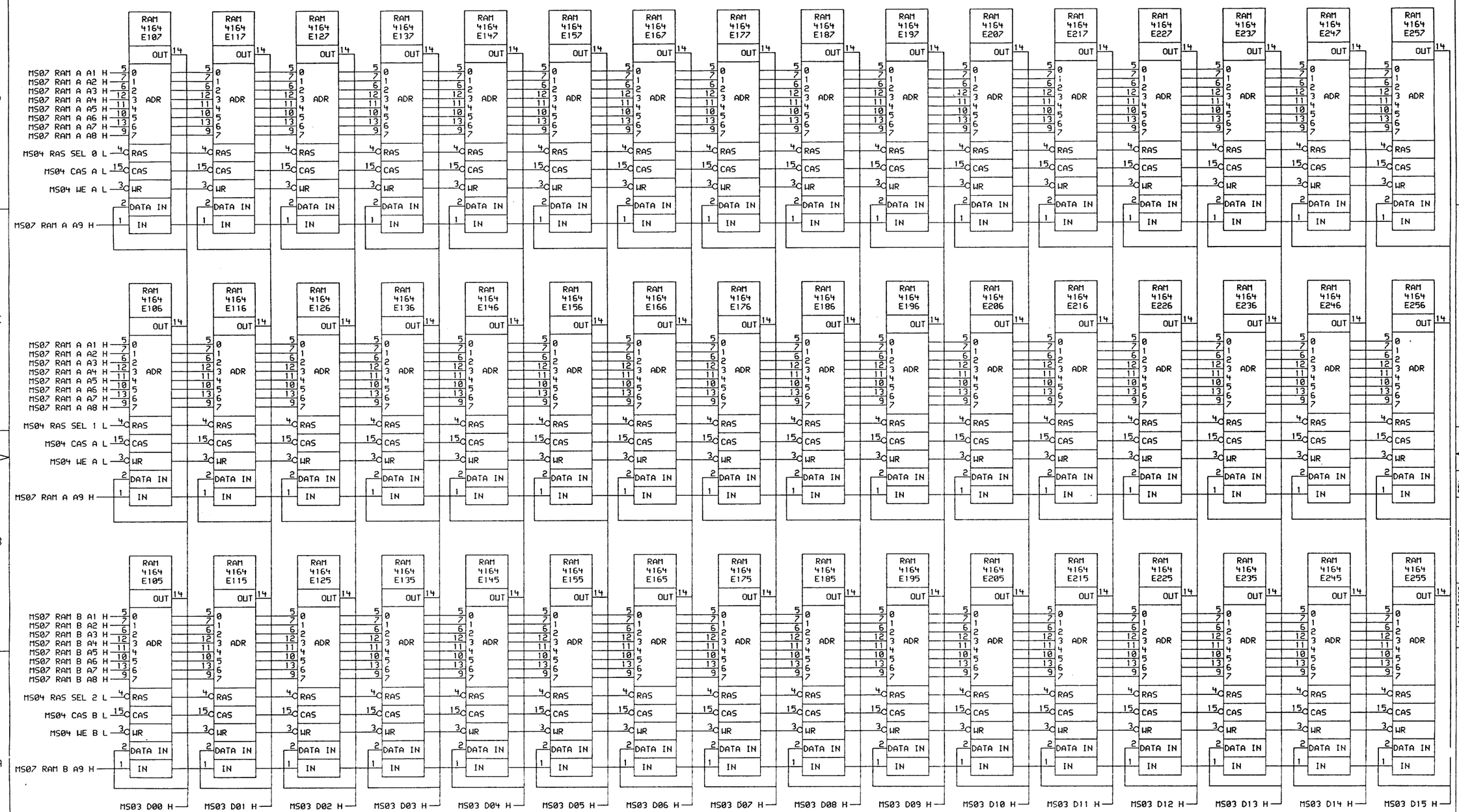

MEMORY ARRAY

PAGE 9 OF 13

REVISIONS		
CHK	CHANGE NO.	REV

digital

[710,1314]MSP09.DRW 24-JUN-82 15:06

FIRST USED ON OPTION/MODEL: MS11-P

DRN Don Eldens	DATE 29-JUN-82	ENG Jim Jenkins	DATE 29-JUN-82
CHK'D P. BOSSMAN	DATE 29-JUN-82	BOARD LOCATION: SHEET 1 OF 1	
NEXT HIGHER ASSEMBLY: B-DD-M8743-BA			

TITLE: MS11-P MEMORY

SIZE	CODE	NUMBER	REV.
D	CS	M8743-BA-MS09	A

MIL2

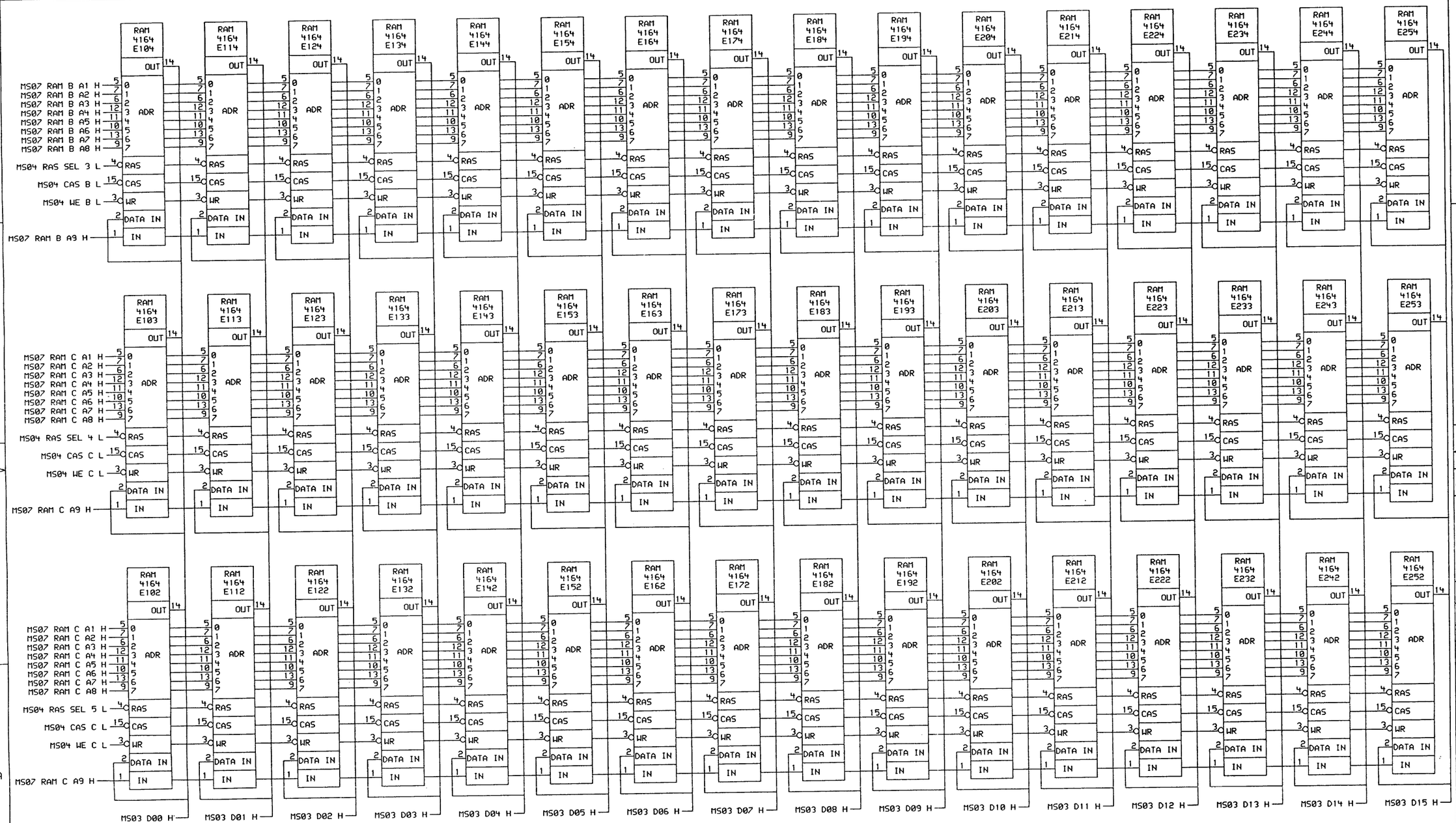

MEMORY ARRAY

PAGE 10 OF 13

REVISIONS		
CHK	CHANGE NO.	REV

digital

[710,1314]MSP10.DRW 25-JUN-82 08:19

FIRST USED ON OPTION/MODEL: MS11-P

DRN Ken Eidens	DATE 29-JUN-82	ENG Jim Jenkins	DATE 29-JUN-82
CHK'D P. BOSSMAN	DATE 23-JUN-82	BOARD LOCATION: SHEET 1 OF 1	
		NEXT HIGHER ASSEMBLY: B-DD-M8743-BA	

TITLE: MS11-P MEMORY

SIZE	CODE	NUMBER	REV.
D	CS	M8743-BA-MS10	A

ML2

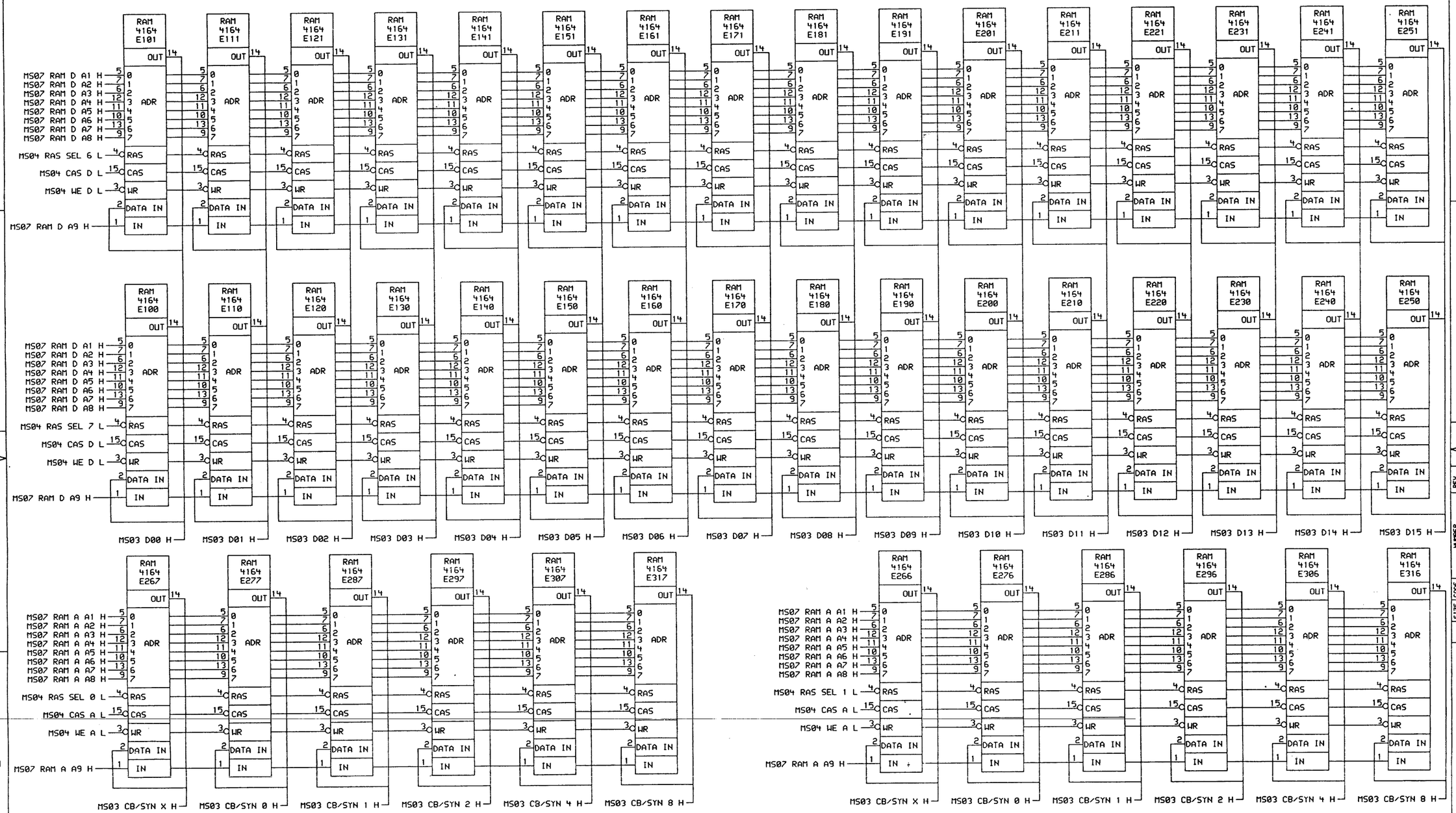

MEMORY ARRAY

PAGE 11 OF 13

REVISIONS		
CHK	CHANGE NO.	REV

digital

DRN Ron Edens DATE 29-JUN-82
CHK'D P. BOSSMAN DATE 29-JUN-82
ENG Jim Foster DATE 29-JUN-82
[710,1,314]MSP11.DRW 25-JUN-82 08:24
BOARD LOCATION: SHEET 1 OF 1
NEXT HIGHER ASSEMBLY: B-DD-M8743-BA
FIRST USED ON OPTION/MODEL: MS11-P

TITLE: MS11-P MEMORY

SIZE	CODE	NUMBER	REV.
D	CS	M8743-BA-MS11	A

ML2

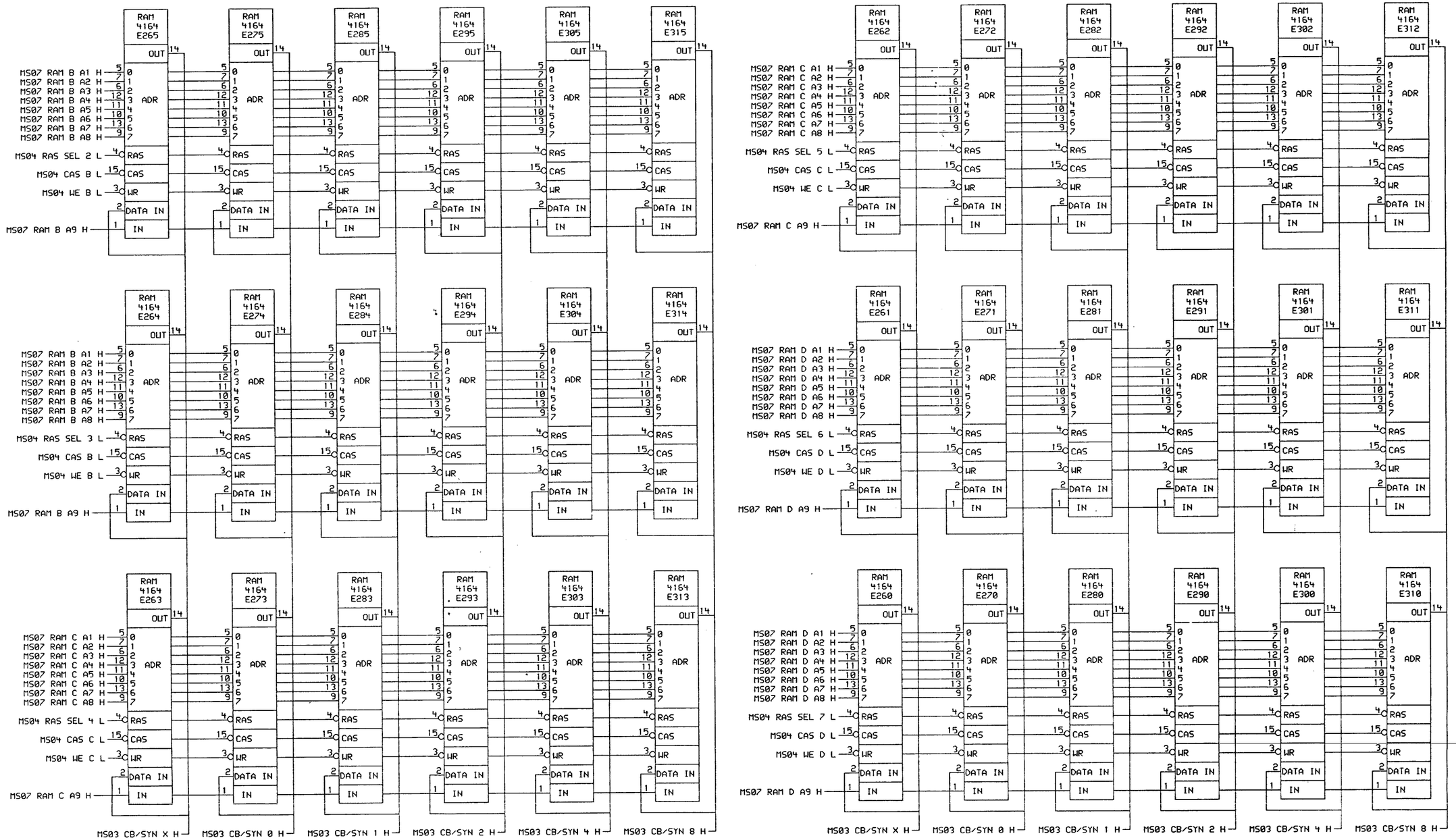

MEMORY ARRAY

PAGE 12 OF 13

REVISIONS		
CHK	CHANGE NO.	REV

digital

DRN Don Edens DATE 29-JUN-82 ENG Jim Jacobs DATE 29-JUN-82
CHK'D. P. BOSSMAN DATE 29-JUN-82 BOARD LOCATION: SHEET 1 OF 1
[710,1314]MSP12.DRW 25-JUN-82 08:32 NEXT HIGHER ASSEMBLY: B-DD-M8743-BA
FIRST USED ON OPTION/MODEL: MS11-P

TITLE: MS11-P MEMORY

SIZE	CODE	NUMBER	REV.
D	CS	M8743-BA-MS12	A

ML2

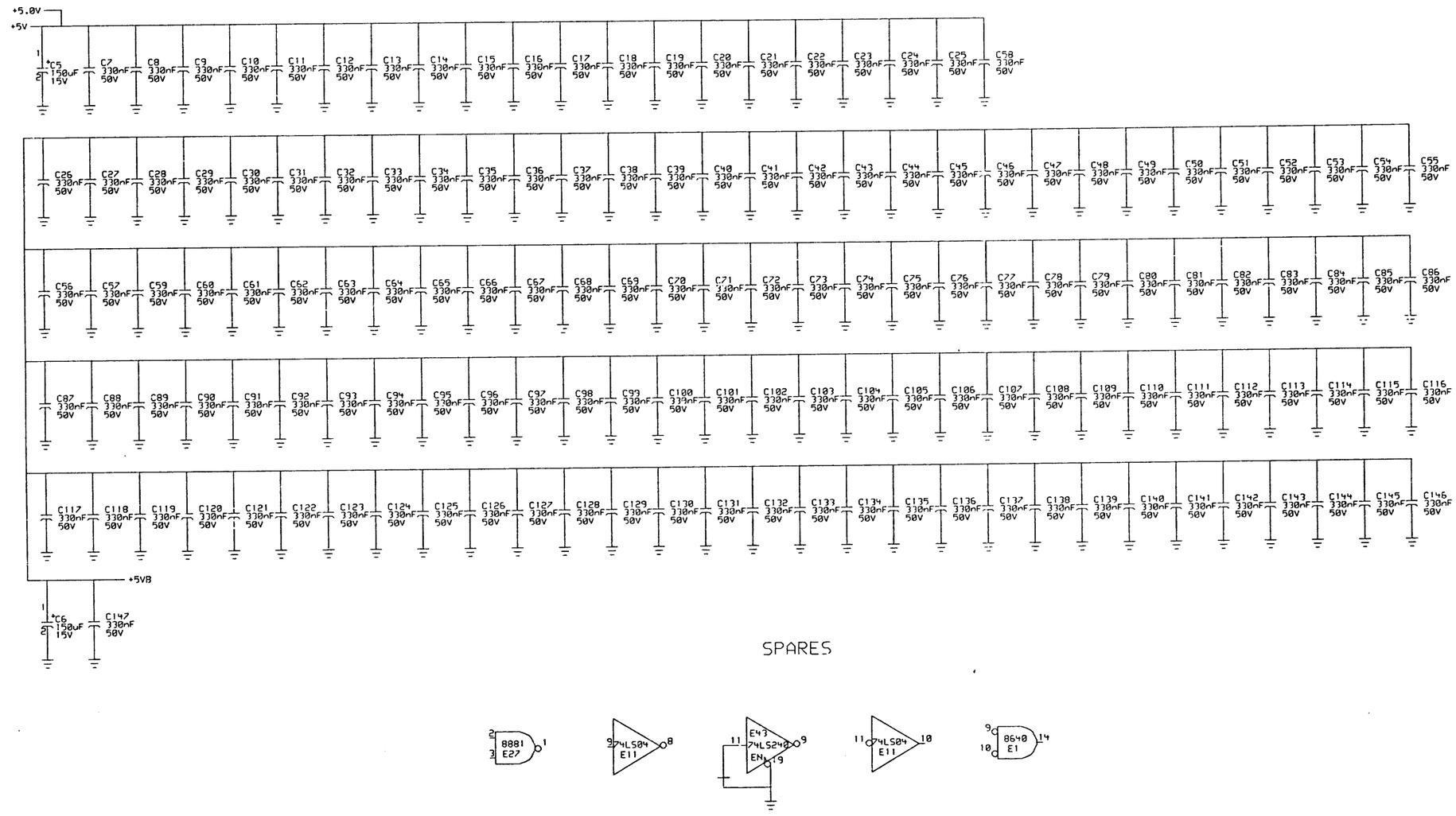

SPARES

PAGE 13 OF 13

REVISIONS		
CHK	CHANGE NO.	REV

DRN. S. ROCHEFORT DATE 13-MAY-83
CHK'D P.BOSSMAN DATE 13-MAY-83
ENG DATE 13-MAY-83
BOARD LOCATION: SHEET 1 OF 1
PRI:CLAVERNK:MUK:MS11-P.ECO3.BA:MSP13.DWG 13-APR-83 08:42
NEXT HIGHER ASSEMBLY: B-DD-M8743-BA
FIRST USED ON OPTION/MODEL: MS11-P

TITLE: MS11-P MEMORY

SIZE	CODE	NUMBER	REV.
K	CS	M8743-BA-MS13	C

SIZE	CODE	NUMBER	REV
B	DD	MS11-P	A

DRAWING NO.	NO. OF SHTS.	PART NO.	DESCRIPTION	REVISIONS
B-TC-MS11-P-1	-	MP01477	FIELD MAINTENANCE PRINT SET	REF
		MS11-PB	512 X 22 MOS MEMORY SYSTEM	A
		M8743-BA	MS11-P MOS MEMORY	A
B-DD-M8743-BA	1		MS11-P MOS MEMORY	A
D-BD-MS11-P-DBU	1		MS11-P BLOCK DIAGRAM	A
D-TD-MS11-P-DBU	6		MS11-P TIMING DIAGRAM	A
E-FD-MS11-P-3	1		MS11-P FLOW DIAGRAM	A
A-SP-MS11-P-2	29		MS11-P SPECIFICATION	A
K-PL-MS11-P-DBP1	1		MS11-P SHIPPING LIST	A

NOTES:

REVISION HISTORY		
DATE	ECO NO.	REV.
9/82	INIT.	A

digital

DRN. L. PETERSON	DATE 7/21/82	TITLE MS11-P MOS MEMORY SYSTEM	
CHK'D James P. Ametts	DATE 24 Sept 82		
DES. ENG. James P. Ametts	DATE 24 Sept 82	DOCUMENT NUMBER	
RESP. ENG. James P. Ametts	DATE 24 Sept 82	SIZE B / CODE DD / NUMBER MS11-P	REV. A
MFG. ENG. R a Hill	DATE 24 Sept 82	SHEET 1 OF 1	

DRB 126C
EN-01242-16-REVA(396)

ML2

NOTES:

1. NUMBERS IN PARENTHESES ARE SCHEMATIC PAGE NUMBERS.

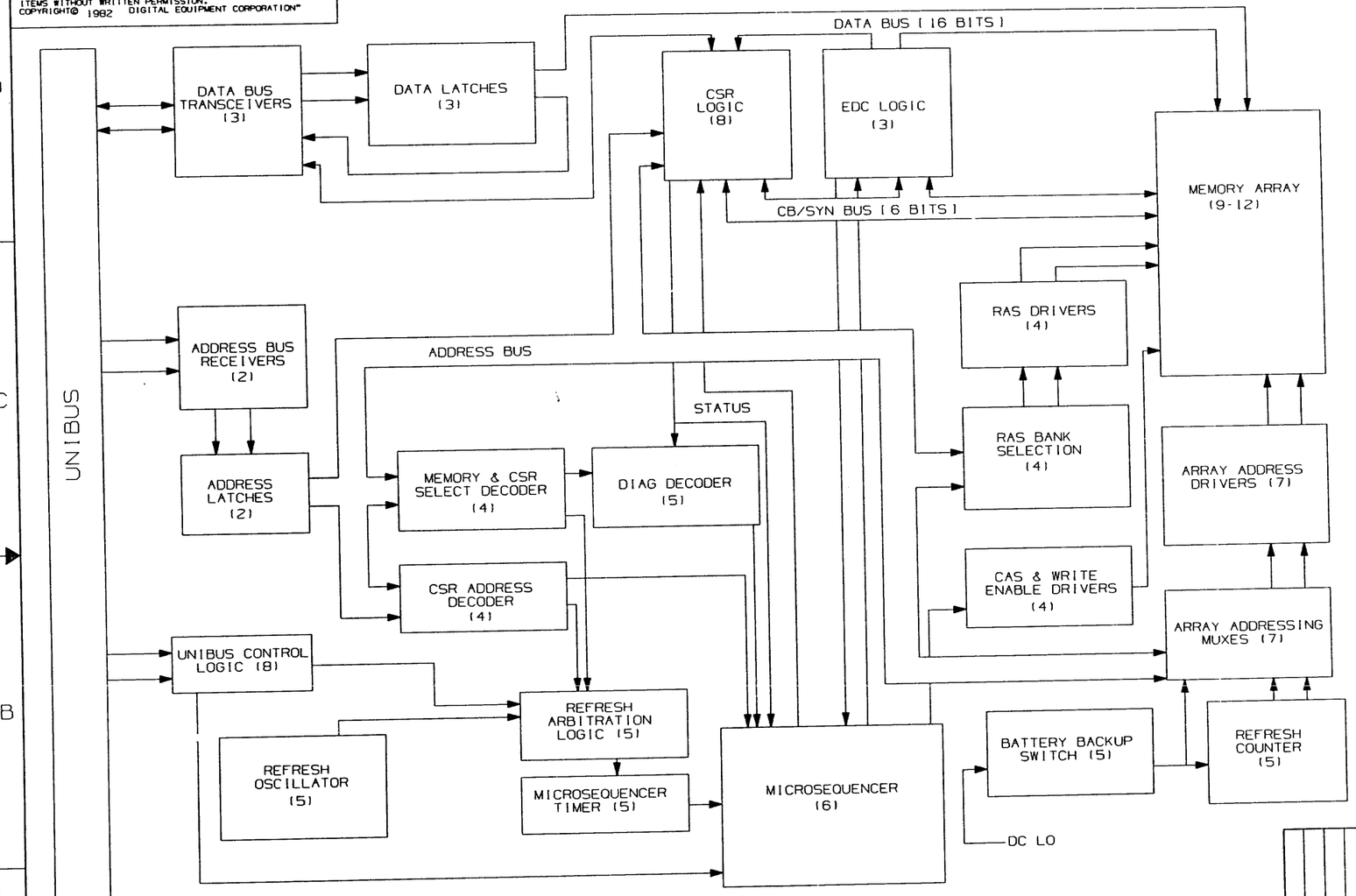

REVISIONS		
CHK	CHANGE NO.	REV.
	ORIGINATED	A

DESCRIPTION	DRAWING NO.	PART NO.	ITEM NO.

UNLESS OTHERWISE SPECIFIED DIMENSIONS ARE IN INCHES AND THE FOLLOWING TOLERANCES APPLY (PER DEC STD 114)

INCHES TOLERANCES	ANGLES ±0° 30'	APPLICABLE DIMENSION RANGE (CHECK ONE)	DIMENSION RANGE IN INCHES					
			OVER 0 TO 0.2	OVER 0.2 TO 1.2	OVER 1.2 TO 4.0	OVER 4.0 TO 12.0	OVER 12.0 TO 40.0	OVER 40.0 TO 80.0
.X: ± .1	SURFACE QUALITY	☐	±.02		±.03	±.05	±.10	
.XX: ± .02		☐	±.004	±.008	±.012	±.016	±.024	±.04
.XXX: ± .005	MICROINCHES	☐						

FIRST HIGHER ASS'Y

QUANTITY & VARIATION

THIRD ANGLE PROJECTION

DO NOT SCALE DRAWING

REMOVE BURRS AND BREAK SHARP CORNERS

MATERIAL

FINISH

		DATE
DRN	G.C.MACKENZIE	9/22/82
CHK'D	J.JANETOS	9/22/82
DES. ENG.	J.JANETOS	9/22/82
RESP. ENG.	J.JANETOS	9/22/82
MFG. ENG.	R.HILL	9/22/82
TOP DOC.		

TITLE

digital

MSI1-P
BLOCK DIAGRAM

DOCUMENT NUMBER

SIZE	CODE	NUMBER	REV.
D	BD	MSI1-P-DBU	A

SCALE 1/1 SHEET 1 OF 1

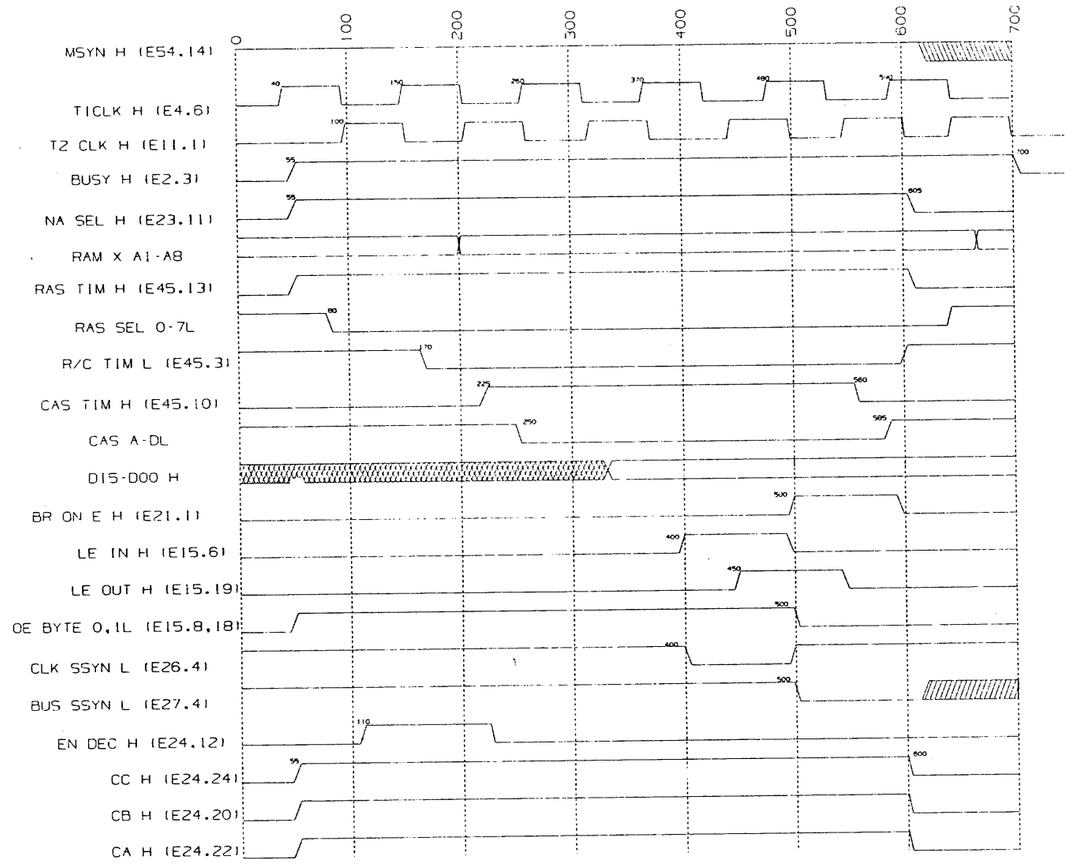

(DATI, TIMING)

REVISIONS		
REV.	A	
CHANGE NO.		
ORIGINATED		
CHK		

DESCRIPTION	DRAWING NO.	PART NO.	ITEM NO.
UNLESS OTHERWISE SPECIFIED DIMENSIONS ARE IN INCHES AND THE FOLLOWING TOLERANCES APPLY (PER DEC STD 114)			

INCHES TOLERANCES	ANGLES ±0° 30'	SURFACE QUALITY	APPLICABLE DIMENSION RANGE (CHECK ONE)	DIMENSION RANGE / INCHES					
				OVER 0 TO 0.2	OVER 0.2 TO 1.2	1.0	OVER 1.2 TO 12.0	OVER 12.0 TO 40.0	OVER 40.0 TO 60.0
.X: ± .1			☐	±.02		±.03	±.05	±.10	
.XX: ± .02			☐						
.XXX: ± .005		MICROINCHES	☐	±.004	±.008	±.012	±.018	±.024	±.04

FIRST HIGHER ASS'Y

QUANTITY & VARIATION

THIRD ANGLE PROJECTION

DO NOT SCALE DRAWING

REMOVE BURRS AND BREAK SHARP CORNERS

MATERIAL

FINISH

DRN	C.W.FIELD	DATE 9/8/82
CHK'D	J. JANETOS	DATE 9/8/82
DES. ENG.	J. JANETOS	DATE 9/8/82
RESP. ENG.	J. JANETOS	DATE 9/8/82
MFG. ENG.	R. HILL	DATE 9/8/82
TOP DOC.		

TITLE

MEMORY SYSTEM TIMING

digital

DOCUMENT NUMBER

SIZE	CODE	NUMBER	REV.
D	TC	MS11-P-DBU	A

SCALE NONE SHEET 1 OF 6

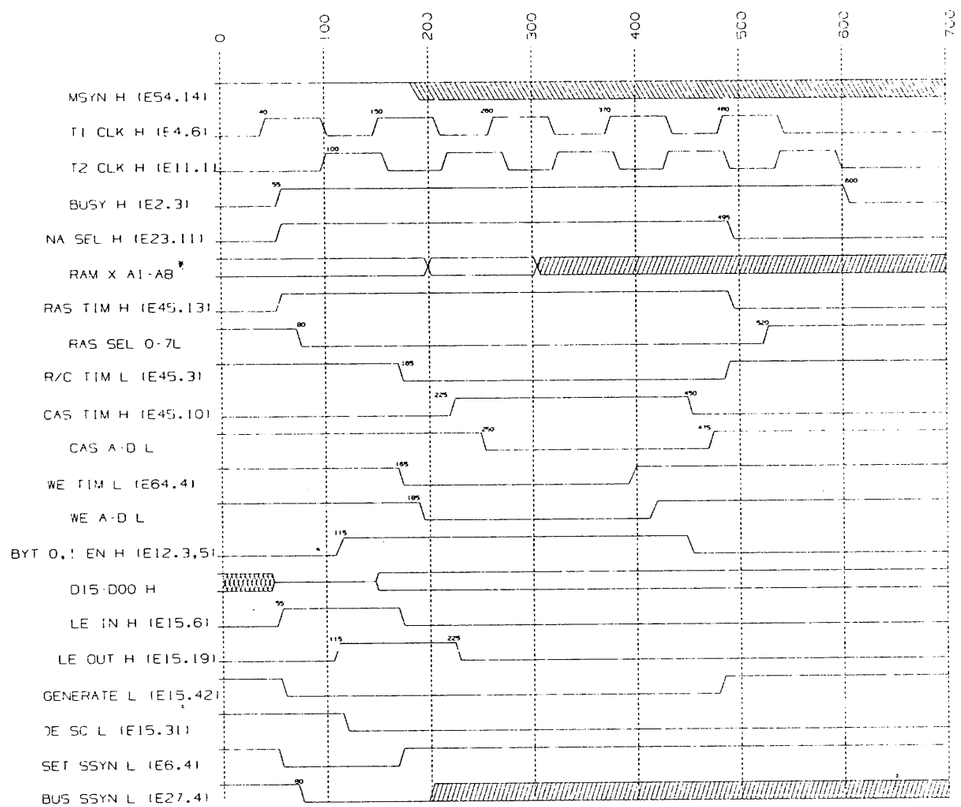

(DATO TIMING)

REVISIONS		
CHK	CHANGE NO	REV

TITLE MEMORY SYSTEM TIMING	SIZE D	CODE TD	NUMBER MS11-P-DBU	REV A
SCALE NONE	SHEET 2 OF 6	DIST		

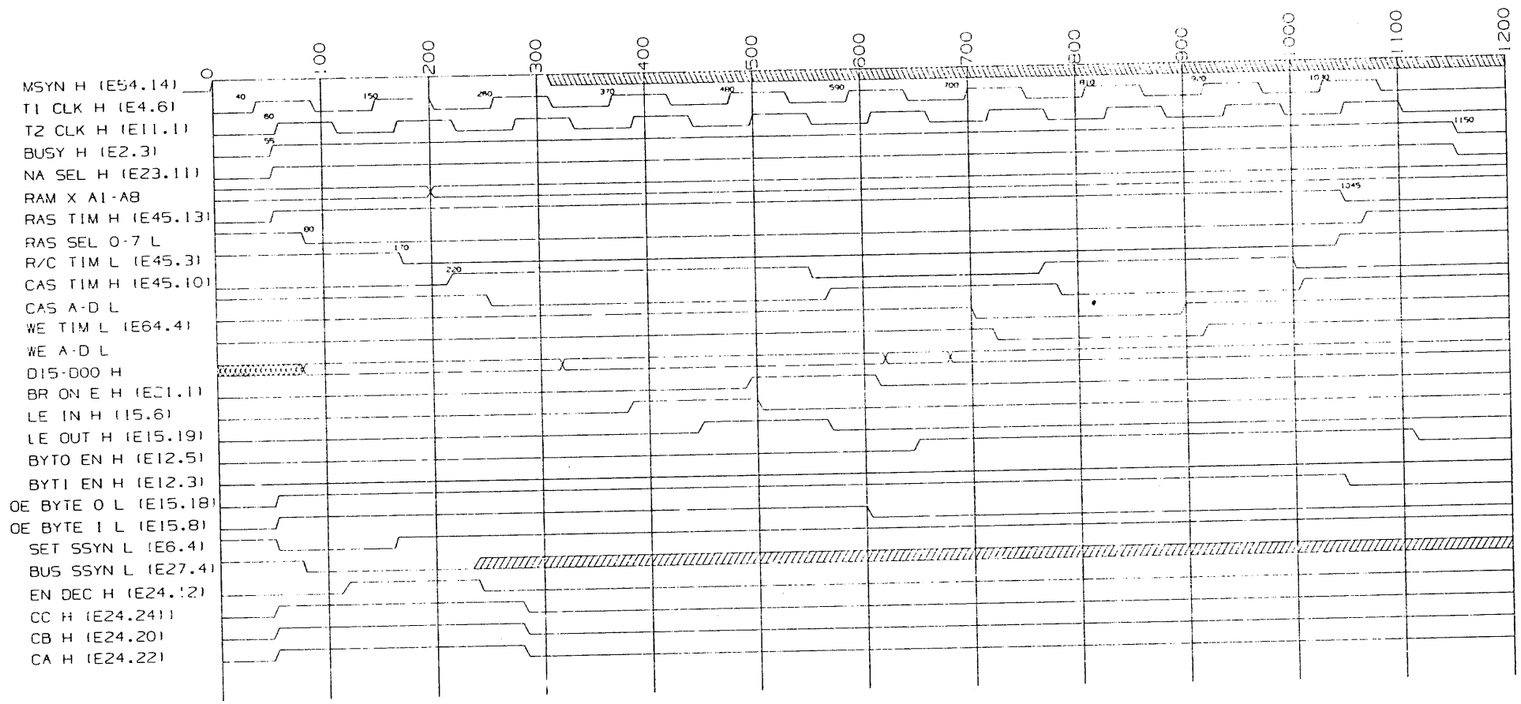

(DATOB TIMING)

REVISIONS		
CHK	CHANGE NO	REV

TITLE MEMORY SYSTEM TIMING	SIZE D	CODE TD	NUMBER MS11-P-DBU
SCALE NONE	SHEET 3 OF 6	DIST	REV A

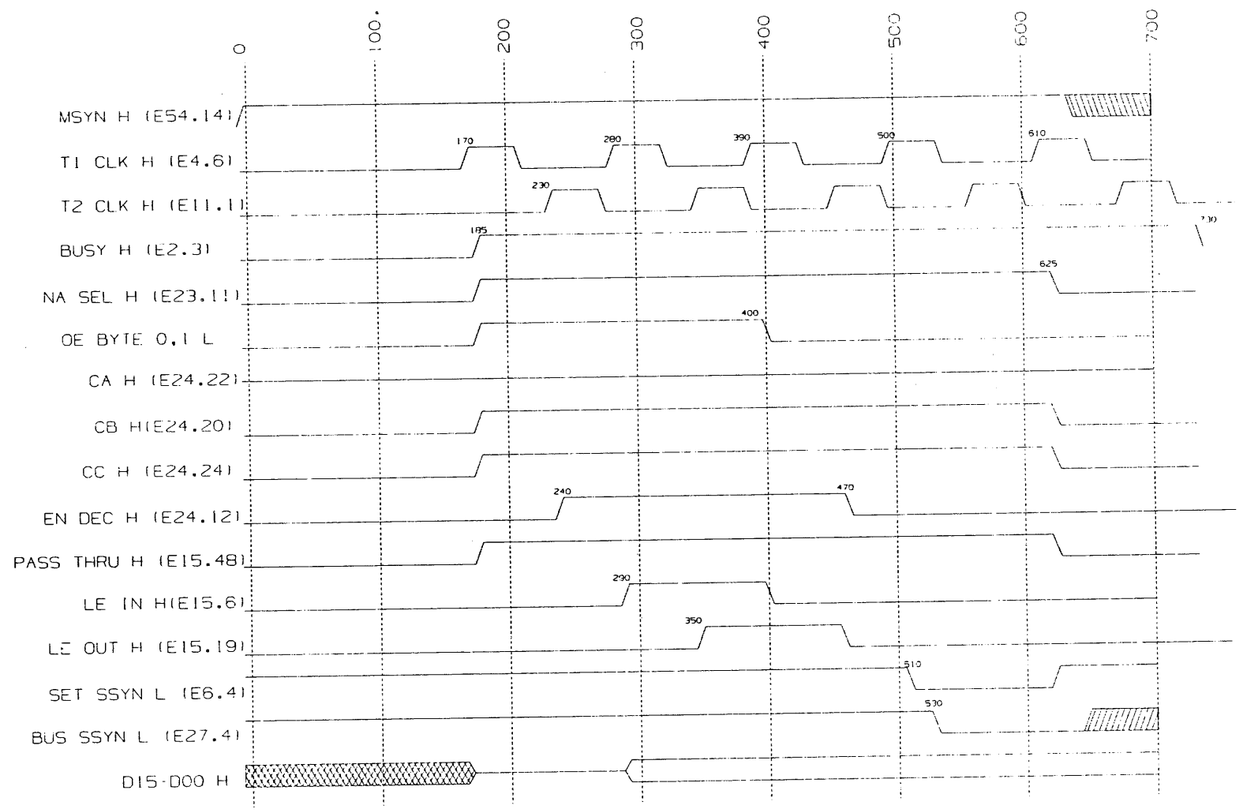

(DATI, CSR)

REVISIONS		
CHK	CHANGE NO	REV

TITLE	SIZE	CODE	NUMBER	REV
MEMORY SYSTEM TIMING	D	TD	MS11-P-DBU	A
SCALE NONE	SHEET 4 OF 6	DIST		

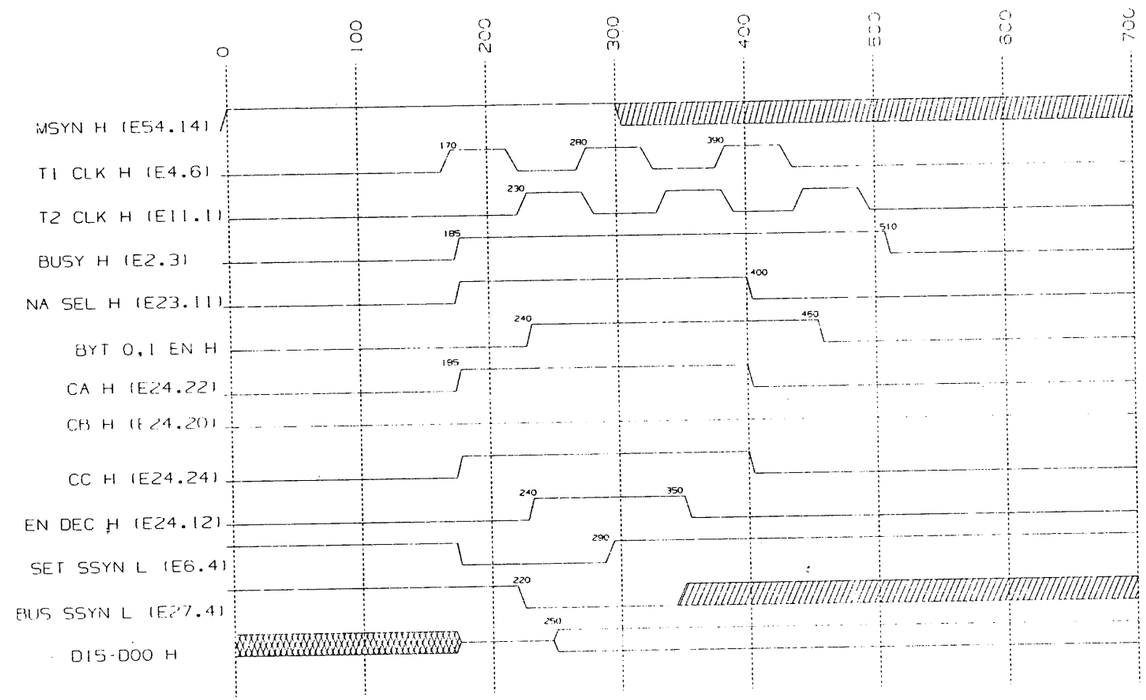

(DATO, CSR)

REVISIONS		
CHK	CHANGE NO	REV

TITLE	SIZE	CODE	NUMBER	REV
MEMORY SYSTEM TIMING	D	TD	MS11-P-DBU	A
SCALE NONE / SHEET 5 OF 6	DIST			

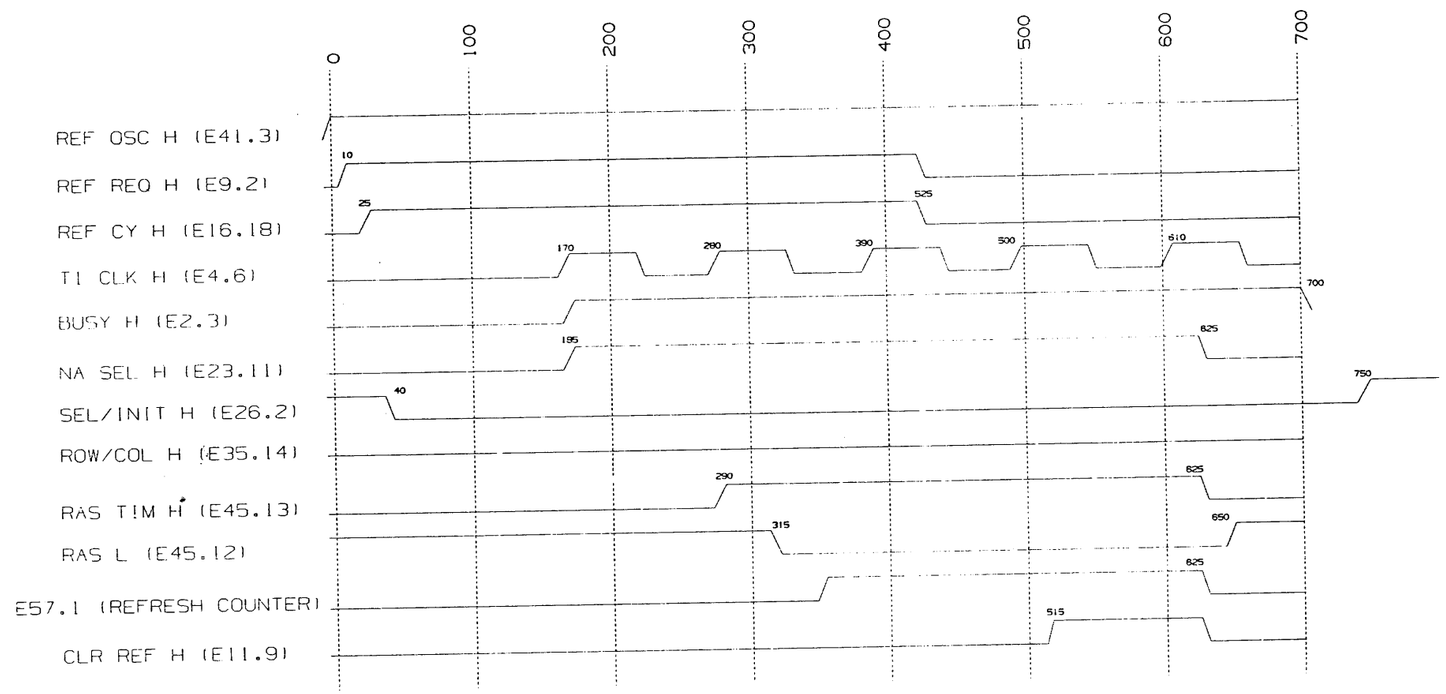

(REFRESH TIMING)

REVISIONS		
CHK	CHANGE NO	REV

TITLE MEMORY SYSTEM TIMING	SIZE D	CODE TD	NUMBER MS11-P-DBU	REV A
SCALE NONE	SHEET 6 OF 6	DIST		

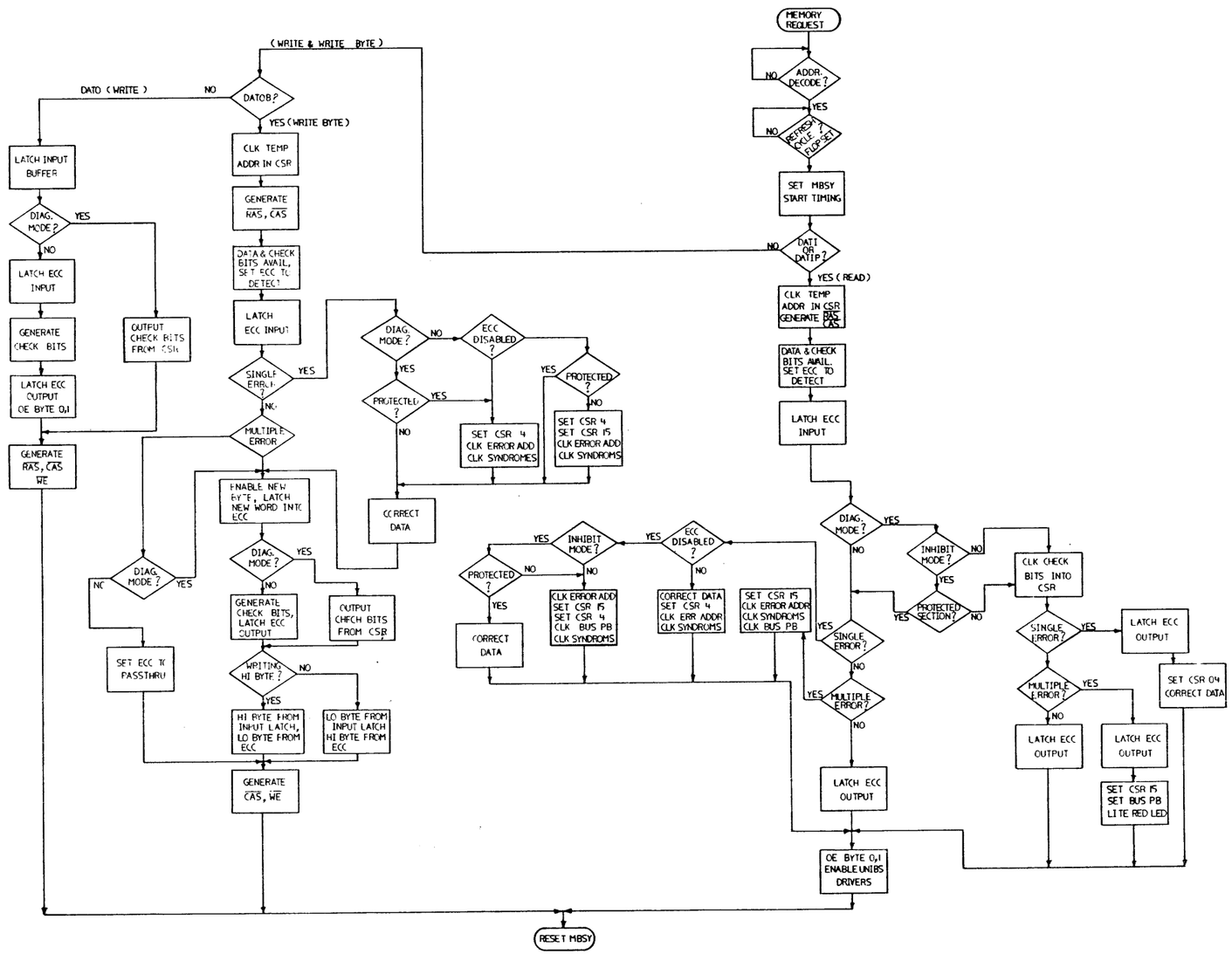

DESCRIPTION	DRAWING NO.	PART NO.	ITEM NO.
UNLESS OTHERWISE SPECIFIED DIMENSIONS ARE IN INCHES AND THE FOLLOWING TOLERANCES APPLY (PER DEC STD 114)			
INCHES TOLERANCES	ANGLES ±0°30'	APPLICABLE DIMENSION RANGE (CHECK ONE)	DIMENSION RANGE IN INCHES
.X ± .1 .XX ± .02 .XXX ± .005	SURFACE QUALITY		OVER 0 TO 0.3 / OVER 0.3 TO 1.2 / OVER 1.2 TO 4.8 / OVER 4.8 TO 19.6 / OVER 19.6 TO 48.8 / OVER 48.8 TO 96.8
QUANTITY & VARIATION			± .02 / ± .03 / ± .05 / ± .10 / ± .004 / ± .005 / ± .010 / ± .015 / ± .004 / ± .01

THIRD ANGLE PROJECTION

DO NOT SCALE DRAWING

REMOVE BURRS AND BREAK SHARP CORNERS

MATERIAL

FINISH

DRN	T. MANN	9 SEPT 82
CHK'D	J. JANETOS	23 SEPT 82
DES ENGR	J. JANETOS	23 SEPT 82
PROJ ENGR	J. JANETOS	23 SEPT 82
MFG ENGR	R. HILL	23 SEPT 82
TOP ENGR. MGR.		

TITLE: FLOW DIAGRAM

DOCUMENT NUMBER: E FD MS11-P-3 REV A

SCALE: SHEET 1 OF 1

REVISION HISTORY

REV	ECO NUMBER	DATE
A	ORIGINATED	

MS11-P-3

LEGEND		
PART NUMBER	REV	VARIATION
7019095-00	A2	AS SHOWN

NOTES:

1. ALL FANS TO BE ORIENTED AS SHOWN - CONNECTORS TOWARD BOTTOM

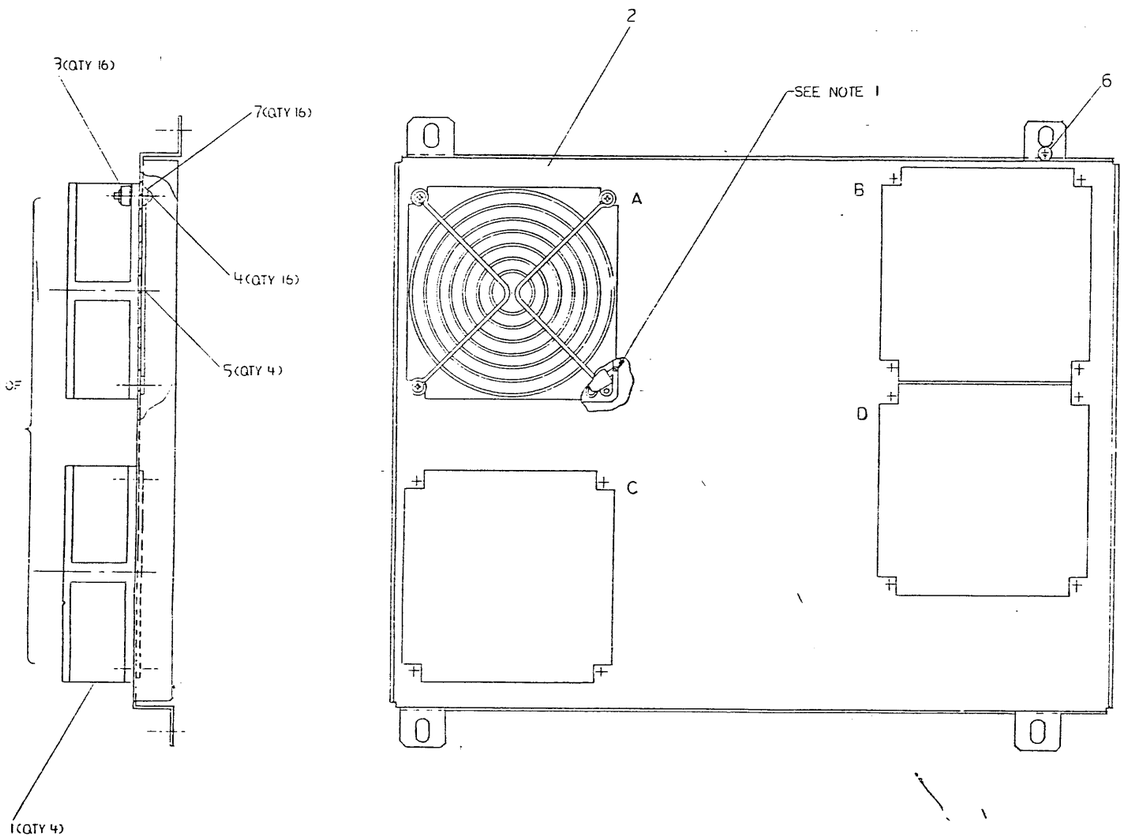

CAUTION:- OFF SHEET PARTS LIST EXIST
REFER TO K-PL-7019094-0-DEP

DESCRIPTION	DRAWING NO	PART NO	ITEM NO

UNLESS OTHERWISE SPECIFIED DIMENSIONS ARE IN INCHES AND THE FOLLOWING TOLERANCES APPLY (PER DEC STD 114)

INCHES TOLERANCES	ANGLES ±0°30'	SURFACE QUALITY	MICROINCHES	QUANTITY & VARIATION
X = ± .1 XX = ± .02 XXX = ± .005		✓		

APPLICABLE DIMENSION RANGE	DIMENSION RANGE IN INCHES					
	OVER 0 TO 0.2	OVER 0.2 TO 1.2	OVER 1.2 TO 4.0	OVER 4.0 TO 12.0	OVER 12.0 TO 48.0	OVER 48.0 TO 96.0
(CHECK ONE)						
	± .001	± .002	± .01	± .02	± .03	± .10
	± .005	± .005	± .012	± .015	± .03	± .06
	± .005	± .005	± .015	± .015	± .03	± .06

THIRD ANGLE PROJECTION

DO NOT SCALE DRAWING

REMOVE BURRS AND BREAK SHARP CORNERS

MATERIAL —

FINISH —

		DATE
DRN	W. E. Coburn	17 MAY '82
CHK'D	L. Cowell	17 MAY 82
DES ENG	L. Cowell	17 MAY 82
RESP ENG	[illegible]	17 MAY 82
MFG ENG	[illegible]	17 MAY 82
NEXT HIGHER DOC	7019937-0-0	

TITLE digital

FAN PLATE ASSY

DOCUMENT NUMBER			
SIZE	CODE	NUMBER	REV
E	AD	7019094-0-0	3

SCALE 1/1 SHEET 1 OF

REVISION HISTORY			
DATE	ECO NUMBER		REV
17 MAY 82	INITIAL		A
[illegible]	[illegible]		B

AUTOMATED BY PRTLST.4Q(50)

P A R T S L I S T

LINE	ITEM	DOCUMENT NUMBER	PART NUMBER	DESCRIPTION	QUANTITY PER VARIATION 00
1	1		1213185-03	FAN,TUBE AXIAL 4.5" 70CFM 115V	4
2	2	E-MD-7426390-0-DBU	7426390-01	PLATE,FAN	1
3	3		9009165-00	CLIP, FAN MOUNTING (12-05033 FAN	16
4	4		9006026-01	SCREW,MACH PAN PHIL 6-	16
5	5		1210263-00	GUARD,FINGER 4.125 X 4.125 MTG H	4
6	6		3612680-00	DECAL, GROUND SIGN PER 3E6 *	1
7	7		9006633-00	WASHER,LOCK INTERNAL STEEL	16

REVISION HISTORY			BASIC PART NO: 7019094	DRN: S.CORCORAN	DATE: 18-FEB-82	D I G I T A L
ENG	ECO NUMBER	REV	SECTION A OF A			
---	INITIAL	A	SECTION, VARIATION INDEX	CHK'D: J. Falkowski B.CLARK	22MAR84 DATE: 26-JAN-83	TITLE PARTS LIST
ML	7019094-MK001	B	[A] 00			FAN PLATE ASSY
			[B]	DES.ENG.: M.CONNELL	DATE: 26-JAN-83	
			[C]	RESP.ENG.: J.BUZYNSKI	27MAR84 DATE: 26-JAN-83	DOCUMENT NUMBER
			[D]			SIZE / CODE / NUMBER / REV
			[E]	MFG.ENG.: R.WHITE	DATE: 26-JAN-83	K / PL / 7019094-0-DBP / B
			[F]	ASSEMBLY NUMBER: E-AD-7019094-0-0	TOP DOCUMENT NUMBER: #K-DD-7019937-0	FILE NAME: MK1092.PLS / EDIT # 2

REV	NUMBER	CODE	SIZE
A	7018768-0-0	IA	D

WIRE TABLE

ITEM	DISCRIPTION			FROM				TO				REMARKS
NO	AWG	COLOR	LENGTH	POINT	CONN	STRIP	TERM	POINT	CONN	STRIP	TERM	
3	18	BLU	28.5	1	P1-1	.19	5	6	P2-1	.19	5	SEE NOTE 3
1	18	BLK	28.5	2	P1-2	.19	5	5	P2-2	.19	5	
2	18	ORN	28.5	3	P1-3	.19	5	4	P2-3	.19	5	

NOTES:

1. USE TIE WRAPS (X) ITEM 6 APPROX. EVERY THREE (3) INCHES.
2. CONNECTORS TO BE LABELED WITH COMPONENT IDENTIFIERS USING DECALS (ITEM 8).
3. UNLESS OTHERWISE NOTED ALL LENGTHS ARE IN INCHES ± 1.0.
4. ATTACH LABEL ITEM 7 APPROX. 8 INCHES FROM P2.

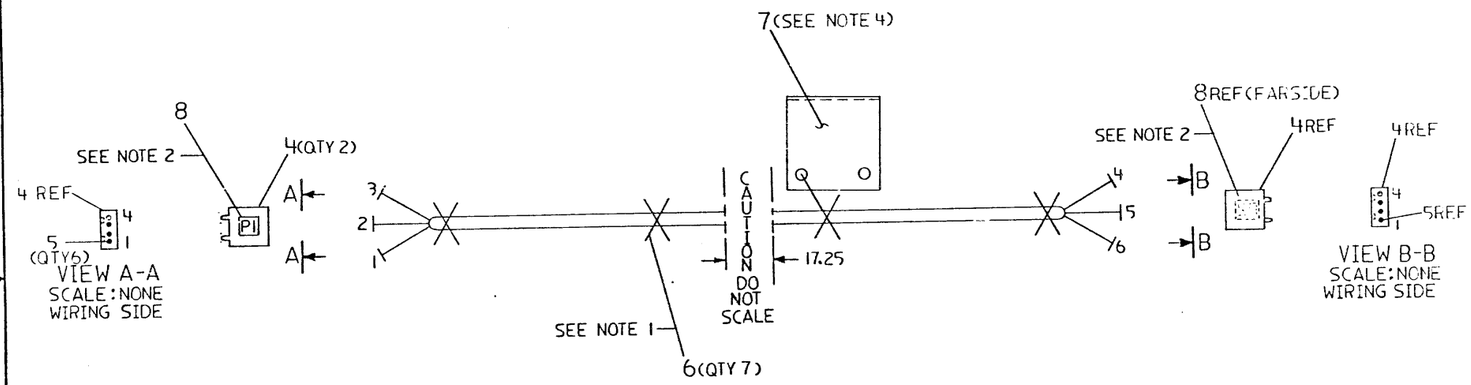

SCALE

0 3.0 6.0

FOR MANUFACTURING PURPOSES ONLY

DO NOT REDUCE

CAUTION: FOR PARTS LIST REFER TO K-PL-7018768-0-DBP, (Z4156A)

DESCRIPTION	DRAWING NO.	PART NO.	ITEM NO.

UNLESS OTHERWISE SPECIFIED DIMENSIONS ARE IN INCHES AND THE FOLLOWING TOLERANCES APPLY (PER DEC STD 114)

INCHES TOLERANCES	ANGLES ± 0°30'	APPLICABLE DIMENSION RANGE (CHECK ONE)	DIMENSION RANGE IN INCHES: OVER 0 TO 0.2	OVER 0.2 TO 1.2	OVER 1.2 TO 4.0	OVER 4.0 TO 12.0	OVER 12.0 TO 40.0	OVER 40.0 TO 80.0
X = ± .1	SURFACE QUALITY	☐	± .02	± .03	± .05	± .10		
XX = ± .02		☐	± .004	± .008	± .012	± .016	± .024	± .04
XXX = ± .005	MICROINCHES	☐						

QUANTITY & VARIATION

THIRD ANGLE PROJECTION

DO NOT SCALE DRAWING

REMOVE BURRS AND BREAK SHARP CORNERS

MATERIAL: SEE PARTS LIST

FINISH: — —

		DATE
DRN	A Cole	13 Feb 82
CHK'D	[illegible]	11-20-82
DES ENG	B Babbitt	22-Oct-82
PROJ ENG	B Trahan	22 Oct 82
MFG ENG	[illegible]	11/7/82

NEXT HIGHER DOC: E-AD-7018762-0-0

TITLE: 15V PWR HARNESS

digital

DOCUMENT NUMBER: SIZE D, CODE IA, NUMBER 7018768-0-0, REV. A

SCALE — — SHEET 1 OF 1

TW

REVISION HISTORY		
DATE	ECO NUMBER	REV

DRD 1000

WIRE TABLE

RUN NO.	ITEM NO.	DESCRIPTION AWG	COLOR	LENGTH	FROM POINT	CONN	STRIP	TERM	TO POINT	CONN	STRIP	TERM.	REMARKS
1	3	20	WHT	13.0	1	P1-4	.19	2	5	J1	.19	5	RUN NO.'S 1&3, 2&4, 5&7, 6&8 ARE TWISTED PAIRS
2			WHT	8.5	7	J3		5					
3			RED	13.0	2	P1-3		2	6	J2		5	
4			RED	8.5	8	J4		5					
5			WHT	23.0	3	P1-2		2	11	J7		5	
6			WHT	8.5	9	J5		5					
7			RED	23.0	4	P1-1		2	12	J8		5	
8	3	20	RED	8.5	10	J6	.19	5			.19		

NOTES:

1. USE TIE WRAPS (X) ITEM #6 APPROX EVERY THREE INCHES WHEN NECESSARY, AND AT EVERY BREAKOUT POINT.
2. COMPONENT TO BE LABELED WITH COMPONENT IDENTIFIERS USING BRADY MARKERS, ITEM 8 & 9.

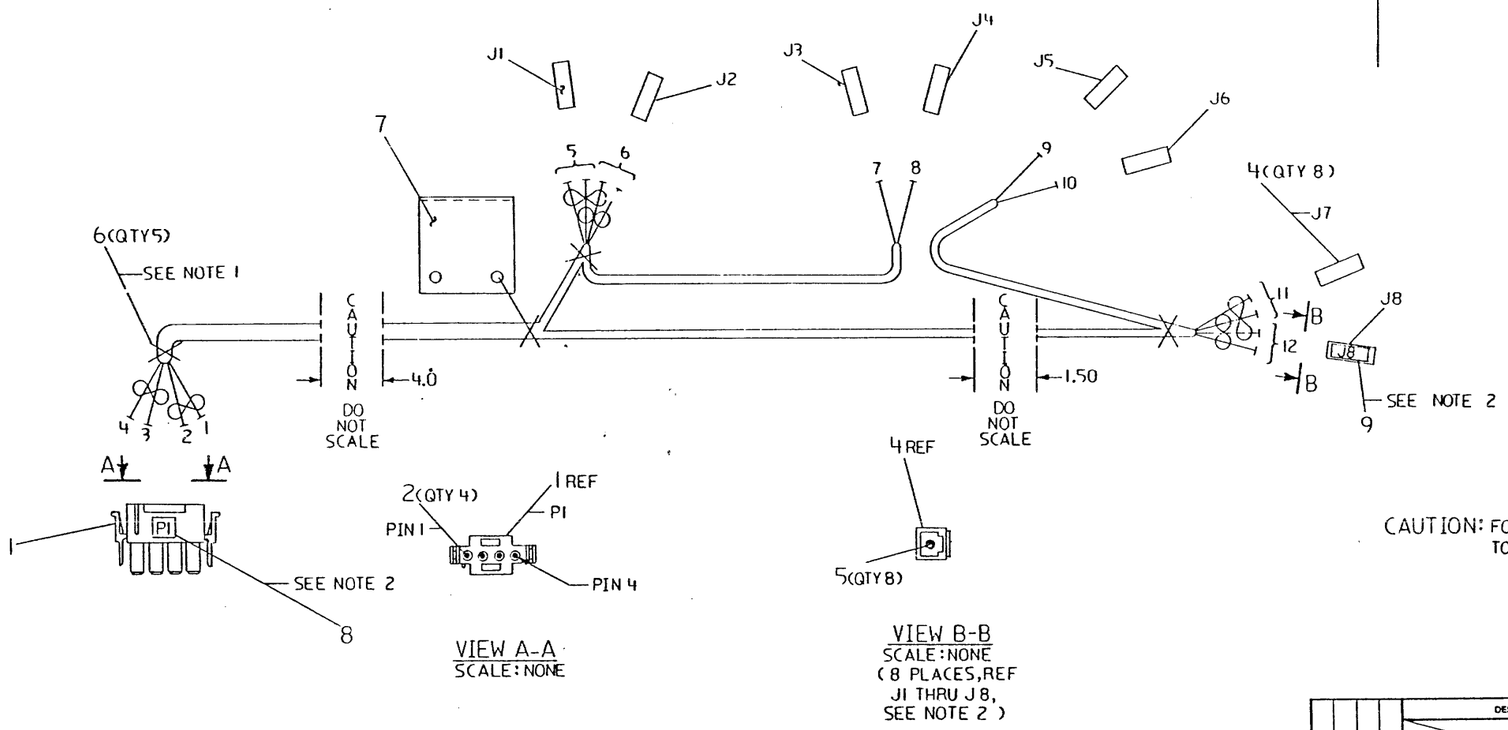

VIEW A-A
SCALE: NONE

VIEW B-B
SCALE: NONE
(8 PLACES, REF J1 THRU J8, SEE NOTE 2)

CAUTION: FOR PARTS LIST REFER TO K-PL-7018765-0-DBP (Z4153A)

SCALE
0 3.0 6.0
FOR MANUFACTURING PURPOSES ONLY
DO NOT REDUCE

DESCRIPTION	DRAWING NO.	PART NO.	ITEM NO.

UNLESS OTHERWISE SPECIFIED DIMENSIONS ARE IN INCHES AND THE FOLLOWING TOLERANCES APPLY (PER DEC STD 114)

INCHES TOLERANCES	ANGLES ±0°30'	APPLICABLE DIMENSION RANGE (CHECK ONE)	DIMENSION RANGE IN INCHES: OVER 0 TO 0.2	OVER 0.2 TO 1.2	OVER 1.2 TO 4.0	OVER 4.0 TO 12.0	OVER 12.0 TO 40.0	OVER 40.0 TO 80.0
.X = ±.1	SURFACE QUALITY	☐	±.02		±.05	±.05	±.10	
.XX = ±.02		☐	±.004	±.008	±.012	±.016	±.024	±.04
.XXX = ±.005	MICROINCHES	☐						

QUANTITY & VARIATION

THIRD ANGLE PROJECTION

DO NOT SCALE DRAWING

REMOVE BURRS AND BREAK SHARP CORNERS

MATERIAL: SEE PARTS LIST

FINISH: —

		DATE
DRN	A. Cochran	7 June 82
CHK'D	[illegible]	11-10-82
DES ENG	[illegible]	22 OCT 82
RESP ENG	[illegible]	21 OCT 82
MFG ENG	[illegible]	11/5/82

NEXT HIGHER DOC: E-AD-7018765-0-0

TITLE: FAN HARNESS ASSY

digital

DOCUMENT NUMBER: SIZE D | CODE IA | NUMBER 7018765-0-0 | REV A

SCALE: — | SHEET 1 OF 1

REVISION HISTORY

REV	ECO NUMBER	DATE

DRD 1000

REV	NUMBER	SIZE	CODE
A	7018765-0-0	D	IA

ITEM NO	DESCRIPTION AWG	COLOR	LENGTH	FROM POINT	CONN	STRIP	TERM	TO POINT	CONN	STRIP	TERM	REMARKS
2	10	RED	25.5	4	⊣⊢	.25	3	8	⊣⊢	.25	6	
2	↑	RED	25.0	3	⊣⊢	↑	↑	7	⊣⊢	↑	↑	
1	↓	BLK	22.0	2	⊣⊢	↓	↓	6	⊣⊢	↓	↓	
1	10	BLK	21.5	1	⊣⊢	.25	3	5	⊣⊢	.25	6	

NOTE:

1 USE TIE WRAPS (X), ITEM 4, APPROX AS SHOWN, WHEN NECESSARY, AND AT EVERY BREAKOUT POINT.

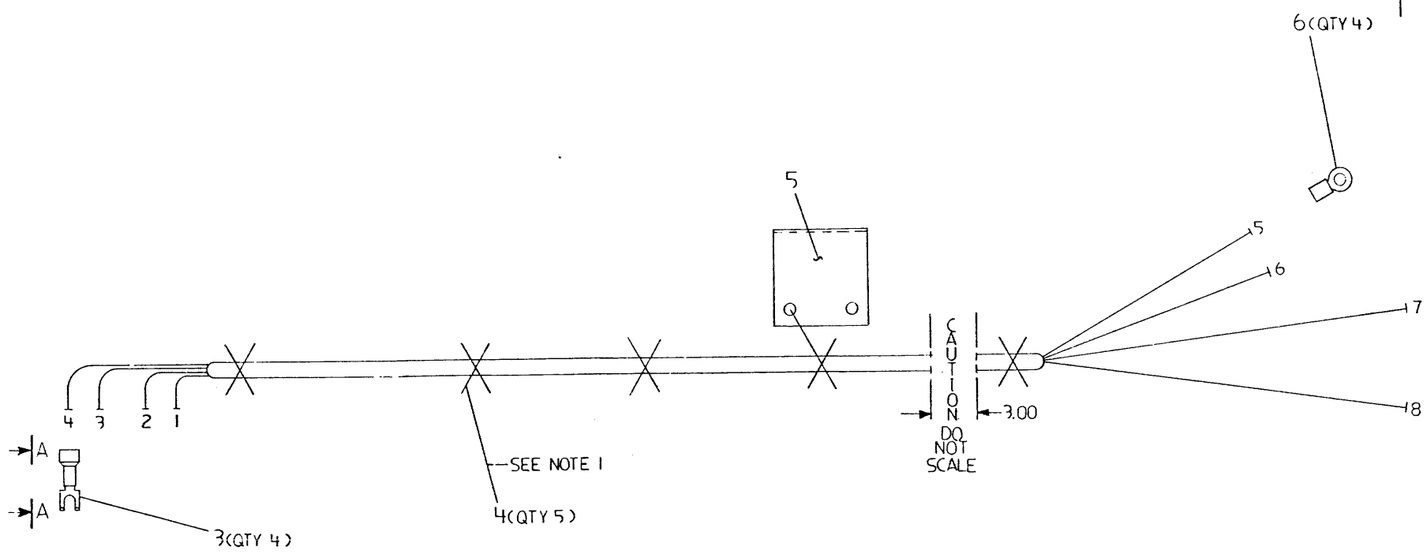

CAUTION: FOR PARTS LIST REFER TO K-PL-7018767-0-DBP, (Z4155)

VIEW AA
SIDE VIEW

SCALE
0 3.0 6.0
FOR MANUFACTURING PURPOSES ONLY
DO NOT REDUCE

REVISION HISTORY			
DATE	ECO NUMBER		REV
17 FEB 82	7018767-M1D01	B.HILLETT	B

DRD 1000

	DESCRIPTION	DRAWING NO.	PART NO.	ITEM NO.

UNLESS OTHERWISE SPECIFIED DIMENSIONS ARE IN INCHES AND THE FOLLOWING TOLERANCES APPLY (PER DEC STD 114)

INCHES TOLERANCES	ANGLES ±0°30'	APPLICABLE DIMENSION RANGE (CHECK ONE)	OVER 0 TO 0.2	OVER 0.2 TO 1.2	OVER 1.2 TO 4.0	OVER 4.0 TO 12.0	OVER 12.0 TO 40.0	OVER 40.0 TO 80.0
X = ±.1	SURFACE QUALITY	☐		±.02	±.03	±.05	±.10	
XX = ±.02		☐	±.004	±.008	±.012	±.016	±.024	±.04
XXX = ±.005	MICROINCHES	☐						

QUANTITY & VARIATION

THIRD ANGLE PROJECTION

DO NOT SCALE DRAWING

REMOVE BURRS AND BREAK SHARP CORNERS

MATERIAL: SEE PARTS LIST

FINISH: — —

		DATE
DFN	J. Rycher	17 Feb 82
CHK'D	[illegible]	[illegible]
DES. ENG.	B. Gladson	[illegible]
RESP. ENG.	B. Stanell	[illegible]
MFG. ENG.		[illegible]
NEXT HIGHER DOC	E-AD-7018762-0-0	

TITLE: 5V PWR HARNESS

digital

DOCUMENT NUMBER: SIZE D, CODE IA, NUMBER 7018767-0-0, REV B

SCALE — — SHEET 1 OF 1

TW

*** DRAWING DIRECTORY ***

UNIT VARIATIONS	
VAR	TITLE
BC17C-10	CABLE, 10 FT LONG
BC17C-25	CABLE, 25 FT LONG
BC17C-35	CABLE, 35 FT LONG
BC17C-50	CABLE, 50 FT LONG
BC17C-75	CABLE, 75 FT LONG
BC17C-A0	CABLE, 100 FT LONG
BC17C-B0	CABLE, 200 FT LONG
BC17C-B5	CABLE, 250 FT LONG

USED ON OPTION/MODEL
DECSA

DRN. R.J. RILEY	DATE 7-27-83
CHK'D R.J. RILEY	DATE 7-27-83
PROJ. ENG. J. BUZYNSKI	DATE 7-27-83
PROD. B. SWAN	DATE 7-27-83

SHEET 1 OF 2

digital

TITLE:
CABLE, MODEM EXTENSION

SIZE	CODE	NUMBER	REV
K	DD	BC17C-0-DBF	A

DIST.

TW

	DRAWING NUMBER	DESCRIPTION	
1	K-PL-BC17C-0-DBP	CABLE, MODEM EXTENSION PARTS LIST	E/M
	A-PS-1700325-0-0	CABLE, MODEM EXTENSION	E/M
2	D-AD-BC17C-0-0	CABLE, MODEM EXTENSION	E/M

	DRAWING NUMBER	DESCRIPTION	

TYPE: E = ELECTRICAL
M = MECHANICAL
E/M = ELECTRO/MECHANICAL

digital

TITLE:
CABLE, MODEM EXTENSION

SHEET 2 OF 2	SIZE	CODE	NUMBER	REV
	K	DD	BC17C-0-DBF	A

TW

SIZE D CODE AD NUMBER BC17C-0-0 REV A

WIRE TABLE

TO CONN	TO WITH	FROM CONN	FROM WITH	REMARKS
P1-1		P2-1		
P1-2		P2-2		
P1-3		P2-3		
P1-4		P2-4		
P1-5		P2-5		
P1-6		P2-6		
P1-7		P2-7		
P1-8		P2-8		
P1-12		P2-12		
P1-15		P2-15		CONDUCTOR
P1-15 DRAIN		P1-7		DRAIN (NOTE 1)
P1-17		P2-17		CONDUCTOR
P1-17 DRAIN		P1-7		DRAIN (NOTE 1)
P1-18		P2-18		
P1-19		P2-19		
P1-20		P2-20		
P1-22		P2-22		
P1-23		P2-23		
P1-24		P2-24		
P1-24 DRAIN		P1-7		DRAIN (NOTE 1)
P1-SHELL		P2-SHELL		OUTER SHIELD
P2-15 DRAIN		P2-7		DRAIN (NOTE 1)
P2-17 DRAIN		P2-7		DRAIN (NOTE 1)
P2-24 DRAIN		P2-7		DRAIN (NOTE 1)

LEGEND

PART NO	DIM X
BC17C-10	10 FT
" -25	25 FT
" -35	35 FT
" -50	50 FT
" -75	75 FT
" -AØ	100 FT
" -BØ	200 FT
" -B5	250 FT

NOTES:

1. WIRES FROM P1-15 TO P2-15, P1-17 TO P2-17 AND P1-24 TO P2-24 ARE INTERNALLY SHIELDED WIRES WITH THEIR DRAIN WIRES CONNECTED TO P1-7 & P2-7.

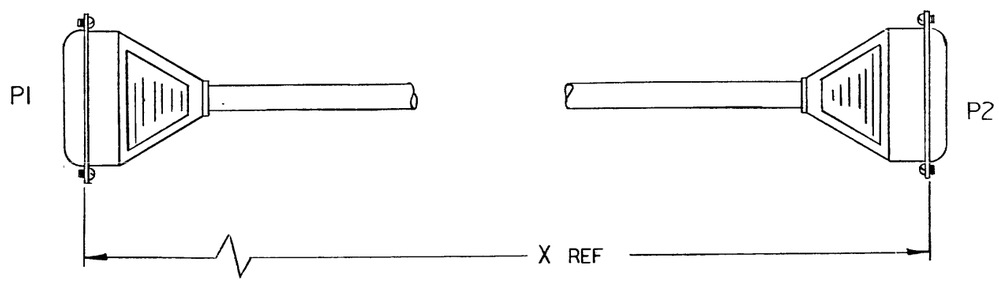

CAUTION: SEE OFF SHEET PARTS LIST K-PL-BC17C-0-DBP (Z4144A)

REVISION HISTORY: REV. | ECO NUMBER | DATE

DRD 1000

DESCRIPTION	DRAWING NO.	PART NO.	ITEM NO.

UNLESS OTHERWISE SPECIFIED DIMENSIONS ARE IN INCHES AND THE FOLLOWING TOLERANCES APPLY (PER DEC STD 114)

INCHES TOLERANCES: .X = ± .1, .XX = ± .02, .XXX = ± .005

ANGLES ± 0° 30'

SURFACE QUALITY — MICROINCHES

QUANTITY & VARIATION

APPLICABLE DIMENSIONAL RANGE (CHECK ONE)	OVER 0 TO 0.2	OVER 0.2 TO 1.2	OVER 1.2 TO 4.0	OVER 4.0 TO 12.0	OVER 12.0 TO 40.0	OVER 40.0 TO 80.0
☐	± .02		± .03	± .05	± .10	
☐	± .004	± .008	± .012	± .016	± .024	± .04
☐						

THIRD ANGLE PROJECTION

DO NOT SCALE DRAWING

REMOVE BURRS AND BREAK SHARP CORNERS

MATERIAL: SEE PARTS LIST

FINISH

DRN — DATE 6-19-82

CHKD — DATE 19 Sept 82

DES. ENG. — DATE 1-Sept-82

RESP. ENG. — DATE 1-Sept-82

MFG. ENG. — DATE 1-Sept-82

NEXT HIGHER DOC K-DD-BC17C-0

TITLE: CABLE EXTENSION MODEM

digital

DOCUMENT NUMBER: SIZE D | CODE AD | NUMBER BC17C-0-0 | REV. A

SCALE NONE | SHEET 1 OF 1

TW

*** DRAWING DIRECTORY ***

UNIT VARIATIONS	
VAR	TITLE
BC17D-02	CABLE, 2 FT LONG
BC17D-10	CABLE, 10 FT LONG
BC17D-25	CABLE, 25 FT LONG
BC17D-50	CABLE, 50 FT LONG
BC17D-A0	CABLE, 100 FT LONG

USED ON OPTION/MODEL
DECSA

DRN. R.J. RILEY	DATE 7-27-83
CHK'D R.J. RILEY	DATE 7-27-83
PROJ. ENG. J. BUZYNSKI	DATE 7-27-83
PROD. B. SWAN	DATE 7-27-83

SHEET 1 OF 2

digital

TITLE:
CABLE, NULL MODEM

SIZE	CODE	NUMBER	REV
K	DD	BC17D-0-DBF	A

DIST.

TW

	DRAWING NUMBER	DESCRIPTION	
1	K-PL-BC17D-0-DBP	CABLE, NULL MODEM PARTS LIST	E/M
	A-PS-1700330-0-0	CABLE, NULL MODEM FCC COMP.	E/M
2	D-AD-BC17D-0-0	CABLE, NULL MODEM FCC COMP.	E/M

DRAWING NUMBER	DESCRIPTION

TYPE: E = ELECTRICAL
M = MECHANICAL
E/M = ELECTRO/MECHANICAL

digital

TITLE:
CABLE, NULL MODEM

SHEET 2 OF 2	SIZE	CODE	NUMBER	REV
	K	DD	BC17D-0-DBF	A

TW

SIZE	CODE	NUMBER	REV.
D	AD	BC17D-0-0	A

WIRE TABLE

TO CONN	TO WITH	FROM CONN	FROM WITH	REMARKS
P1-1		P2-1		
P1-2		P2-3		
P1-3		P2-2		
P1-4		P2-8		
P1-4		P1-5		
P1-6		P2-20		
P1-6		P1-22		
P1-7		P2-7		
P1-8		P2-4		
P2-4		P2-5		
P1-20		P2-6		
P2-6		P2-22		
P1-15		P2-17		CONDUCTOR
P1-15		P1-24		
P1-15 DRAIN		P1-7		DRAIN (NOTE 1)
P1-17		P2-15		
P2-15		P2-24		
P1-17 DRAIN		P1-7		DRAIN (NOTE 1)
P1-SHELL		P2-SHELL		OUTER SHIELD
P2-15 DRAIN		P2-7		DRAIN (NOTE 1)
P2-17 DRAIN		P2-7		DRAIN (NOTE 1)

LEGEND

PART NO	DIM X
BC17D-2	2 FT
-10	10 FT
-25	25 FT
-50	50 FT
BC17D-AØ	100 FT

NOTES:

1. WIRES FROM P1-15 TO P2-17 AND P1-17 TO P2-15 ARE INTERNALLY SHIELDED WIRES WITH THEIR DRAIN WIRES CONNECTED TO P1-7 & P2-7.

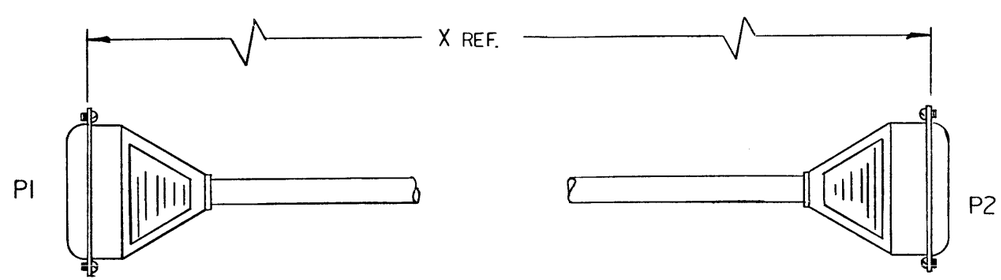

CAUTION: SEE OFF SHEET PARTS LIST K-PL-BC17D-0-DRP (Z4145A)

DESCRIPTION	DRAWING NO.	PART NO.	ITEM NO.

UNLESS OTHERWISE SPECIFIED DIMENSIONS ARE IN INCHES AND THE FOLLOWING TOLERANCES APPLY (PER DEC STD 114)

INCHES TOLERANCES	ANGLES ±0°30'	APPLICABLE DIMENSION RANGE (CHECK ONE)	DIMENSION RANGE IN INCHES: OVER 0 TO 0.2	OVER 0.2 TO 1.2	OVER 1.2 TO 4.0	OVER 4.0 TO 12.0	OVER 12.0 TO 40.0	OVER 40.0 TO 80.0
.X = ± .1	SURFACE QUALITY	☐	± .02		± .05	± .05	± .10	
.XX = ± .02	✓	☐	± .004	± .008	± .012	± .016	± .024	± .04
.XXX = ± .005	MICROINCHES	☐						
QUANTITY & VARIATION								

THIRD ANGLE PROJECTION

DO NOT SCALE DRAWING

REMOVE BURRS AND BREAK SHARP CORNERS

MATERIAL: SEE PARTS LIST

FINISH

		DATE
DRN		6-19-82
CHKT		19 Sept 83
DES. ENG.		1-Sept-83
RESP. ENG.		1-Sept-83
MFG. ENG.		1-Sept-83
NEXT HIGHER DOC.	K-DD-BC17D-0	

TITLE: CABLE, NULL MODEM

digital

DOCUMENT NUMBER

SIZE	CODE	NUMBER	REV.
D	AD	BC17D-0-0	A

SCALE NONE SHEET 1 OF 1

TW

REVISION HISTORY		
DATE	ECO NUMBER	REV.

DRD 100D

*** DRAWING DIRECTORY ***

UNIT VARIATIONS	
VAR	TITLE
BC17L-4	V.35 CABLE, 4 FT LONG

USED ON OPTION/MODEL
DECSA

DRN. R.J. RILEY	DATE 7-27-83
CHK'D R.J. RILEY	DATE 7-27-83
PROJ. ENG. J. BUZYNSKI	DATE 7-27-83
PROD. B. SWAN	DATE 7-27-83

SHEET 1 OF 2

digital

TITLE:
CABLE, NULL MODEM

SIZE	CODE	NUMBER	REV
K	DD	BC17L-0-DBF	A

DIST.

TW

	DRAWING NUMBER	DESCRIPTION			DRAWING NUMBER	DESCRIPTION	
1	K-PL-BC17L-0-DBP	CABLE, NULL MODEM PARTS LIST	E/M				
	A-PS-1700415-0-0	CABLE, NULL MODEM FCC COMP.	E/M				
2	D-AD-BC17L-0-0	CABLE, NULL MODEM	E/M				

TYPE: E = ELECTRICAL
M = MECHANICAL
E/M = ELECTRO/MECHANICAL

|d|i|g|i|t|a|l|

TITLE:
CABLE, NULL MODEM

SHEET 2 OF 2	SIZE	CODE	NUMBER	REV
	K	DD	BC17L-0-DBF	A

TW

SIZE	CODE	NUMBER	REV.
D	AD	BC17L-0-0	A

LEGEND	
PART NO.	DIM "X"
BC17L-4	4 FT

NOTE :
1. WIRES FROM P1-15 TO P2-15, P1-17 TO P2-17, AND P1-24 TO P2-24 ARE INTERNALLY SHIELDED WIRES WITH THEIR DRAIN WIRES CONNECTED TO TO P1-7 & P2-7.

LEGEND				
FROM		TO		REMARKS
CONN	WITH	CONN	WITH	
P2-1		P1-1		
P2-2		P1-2		
P2-3		P1-3		
P2-4		P1-4		
P2-5		P1-5		
P2-6		P1-6		
P2-7		P1-7		
P2-8		P1-8		
P2-9		P1-9		
P2-10		P1-10		
P2-11		P1-11		
P2-12		P1-12		
P2-13		P1-13		
P2-14		P1-14		
P2-15		P1-15		
P2-16		P1-16		
P2-17		P1-17		
P2-18		P1-18		
P2-19		P1-19		
P2-20		P1-20		
P2-21		P1-21		
P2-22		P1-22		
P2-23		P1-23		
P2-24		P1-24		
P2-25		P1-25		
P1-15 DRAIN		P1-7		
P2-15 DRAIN		P2-7		
P1-17 DRAIN		P1-7		
P2-17 DRAIN		P2-7		
P1-24 DRAIN		P1-7		
P1-24 DRAIN		P2-7		
P1 SHELL		P2 SHELL		

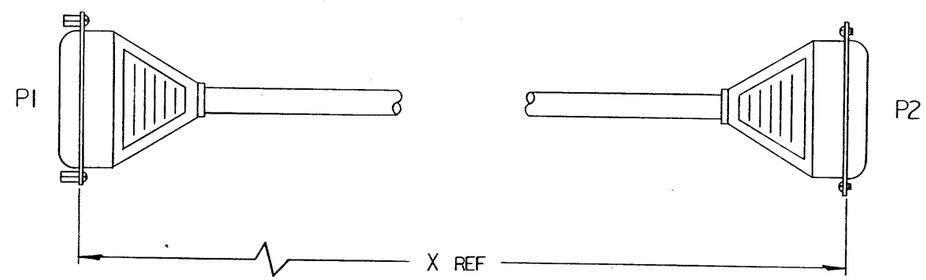

CAUTION: SEE OFF SHEET PARTS LIST
K-PL-BC17L-0-DBP.(Z7732A)

REVISION HISTORY		
DATE	ECO NUMBER	REV.

DRD 1000

DESCRIPTION	DRAWING NO.	PART NO.	ITEM NO.

UNLESS OTHERWISE SPECIFIED DIMENSIONS ARE IN INCHES AND THE FOLLOWING TOLERANCES APPLY (PER DEC STD 114)

INCHES TOLERANCES	ANGLES ±0°30'	APPLICABLE DIMENSION RANGE (CHECK ONE)	DIMENSION RANGE IN INCHES					
			OVER 0 TO 0.2	OVER 0.2 TO 1.2	OVER 1.2 TO 4.0	OVER 4.0 TO 12.0	OVER 12.0 TO 40.0	OVER 40.0 TO 80.0
.X = ± .1	SURFACE QUALITY	☐	± .02		± .03	± .05	± .10	
.XX = ± .02		☐						
.XXX = ± .005		☐	± .004	± .006	± .012	± .016	± .024	± .04
QUANTITY & VARIATION	MICROINCHES							

THIRD ANGLE PROJECTION

DO NOT SCALE DRAWING

REMOVE BURRS AND BREAK SHARP CORNERS

MATERIAL: SEE PARTS LIST

FINISH: —/—

		DATE
DRN	Mike Tousignant	26 Aug 83
CHK'D	[illegible]	19 Sept 83
DES. ENG.	John Bergquist	1-Sept-83
RESP. ENG.	John Bergquist	1-Sept-83
MFG. ENG.	William Swan	1-Sept-83
NEXT HIGHER DOC.	K-DD-BC17L-0-0	

TITLE: CABLE, EXTENSION MODEM

digital

DOCUMENT NUMBER			
SIZE	CODE	NUMBER	REV.
D	AD	BC17L-0-0	A

SCALE — SHEET — OF —

TW

DRAWING DIRECTORY

UNIT VARIATIONS

VAR	TITLE
BC22D-10	CABLE, 10 FT LONG
BC22D-25	CABLE, 25 FT LONG
BC22D-35	CABLE, 35 FT LONG
BC22D-50	CABLE, 50 FT LONG
BC22D-75	CABLE, 75 FT LONG
BC22D-AØ	CABLE, 100 FT LONG
BC22D-A5	CABLE, 150 FT LONG
BC22D-BØ	CABLE, 200 FT LONG
BC22D-B5	CABLE, 250 FT LONG

REVISIONS		
REV.	A	
CHANGE NO.	ORIGINATED	
CHK		

USED ON OPTION/MODEL

BC22D

SHEET 1 OF 2

DRN. S. ZYLAK	DATE 14 MAR 1982	TITLE CABLE, NULL MODEM
CHK'D. J Fatherwho	DATE 13 APR 82	digital
PROJ. ENG. R. Harrington	DATE 13 APR 82	SIZE B / CODE DD / NUMBER BC22D-Ø / REV A
PROD.	DATE 3 MAY 82	DIST.

MK

DRB 106A

FIND NO.	DRAWING NO.	DESCRIPTION	TYPE
1	B-UA-BC22D-Ø-Ø	CABLE, NULL MODEM	E/M
	B-PL-BC22D-Ø-Ø	CABLE, NULL MODEM (PL)	E/M
	A-PS-1700313-0-0	CABLE, NULL MODEM	E/M

FIND NO.	DRAWING NO.	DESCRIPTION	TYPE

TYPE: E ELECTRICAL
M MECHANICAL
E/M ELECTRO/MECHANICAL

digital

TITLE CABLE, NULL MODEM

SHEET 2 OF 2

SIZE B | CODE DD | NUMBER BC22D-Ø | REV. A

MK

DRB 108A

NOTES:

1. FOR CABLE CONFIGURATION REFER TO A-PS-1700313-0-0.

LEGEND

NUMBER	VARIATION	DIM "X"	DIM "Y" REF
BC22D-1Ø	1700313-01	10 FT.	
BC22D-25	1700313-02	25 FT.	
BC22D-35	1700313-03	35 FT.	
BC22D-5Ø	1700313-04	50 FT.	
BC22D-75	1700313-05	75 FT.	
BC22D-AØ	1700313-06	100 FT.	
BC22D-A5	1700313-07	150 FT.	
BC22D-BØ	1700313-08	200 FT.	
BC22D-B5	1700313-09	250 FT	

WIRE TABLE

ITEM NO.	PAIR NO.	DESCRIPTION AWG	DESCRIPTION COLOR	TO CONN	TO WITH	FROM CONN	FROM WITH	REMARKS
2 THRU 10		24	BLK	P1-1		P2-1		
			BRN	P1-2		P2-3		
			RED	P1-3		P2-2		
			ORN	P1-6		P2-20		
			YEL	P1-7		P2-7		
			GRN	P1-20		P2-6		
		24	—	P1 - SHELL		P2 - SHELL		SHIELD & DRAIN WIRE

REVISIONS		
CHK	CHANGE NO.	REV.
	ORIGINATED	A

QUANTITY & VARIATION

DESCRIPTION	DWG./PART NO.	ITEM NO.

UNLESS OTHERWISE SPECIFIED DIMENSIONS ARE IN INCHES

ANGLES ±0° 30'	CLASS OF ACCURACY (CHECK ONE)	NOMINAL DIMENSION RANGE INCHES: OVER 0.0 TO 0.2	OVER 0.2 TO 1.2	OVER 1.2 TO 4.0	OVER 4.0 TO 12.0	OVER 12.0 TO 40.0	OVER 40.0 TO 80.0
SURFACE QUALITY IN MICROINCHES	MEDIUM	±.004	±.008	±.012	±.016	±.024	±.04
	PREFERRED	±.012	±.016	±.025	±.04	±.063	±0.1

THIRD ANGLE PROJECTION

REMOVE BURRS AND BREAK SHARP CORNERS

DO NOT SCALE DWG

MATERIAL

FINISH

DRN. S. Hyde 14 Nov 82

CHK'D

ENG. 1/6/82

PROJ. ENG. 13 APR 82

PROD.

NEXT HIGHER ASSY. B-DD-BC22D-Ø

SCALE NONE

SHEET OF

FIRST USED ON

digital

TITLE CABLE, NULL MODEM

SIZE	CODE	NUMBER	REV.
B	UA	BC22D-Ø-Ø	A

DIST.

DRB 100A

MK

DRAWING DIRECTORY

UNIT VARIATIONS

VARIATION	TITLE
BC22E-02	CABLE, 02 FEET LONG
BC22E-10	CABLE, 10 FEET LONG
BC22E-25	CABLE, 25 FEET LONG
BC22E-35	CABLE, 35 FEET LONG
BC22E-50	CABLE, 50 FEET LONG
BC22E-75	CABLE, 75 FEET LONG

REVISION HISTORY			USED ON OPTION/MODEL
ENG	ECO NUMBER	REV	
---	INITIAL	A	BC22E
SA	BC22E-MK001	B	

RESPONSIBLE ENGR. : J. FLIS
DATE: 15 MAR 82 — 14-NOV-85

MADE BY : S. ZYLAK
DATE: 15 MAR 82

CHECKED BY : J. FALKOWSKI — 14-NOV-85
DATE: 12 APR 82

DESIGN ENGINEER : J. FLIS
DATE: 16 APR 82

PRODUCTION ENGR. : W. LADNER
DATE: 13 MAY 82

d i g i t a l

TITLE: DRAWING DIRECTORY

CABLE, NULL MODEM

SIZE	CODE	DOCUMENT NUMBER	REV.
K	DD	BC22E-0	B

SHEET 1 OF 2 MXO

FIND #	DRAWING NUMBER	DESCRIPTION	TYPE
1	C-UA-BC22E-0-0	CABLE, NULL MODEM	E/M
	K-PL-BC22E-0-0	CABLE, NULL MODEM (PL)	E/M
	A-PS-1700322-0-0	CABLE, NULL MODEM	

FIND #	DRAWING NUMBER	DESCRIPTION	TYPE

TYPE: E ELECTRICAL
M MECHANICAL
E/M ELECTRO/MECHANICAL

d i g i t a l

TITLE DRAWING DIRECTORY
CABLE, NULL MODEM

SIZE	CODE	DOCUMENT NUMBER	REV.
K	DD	BC22E-0	B

SHEET 2 OF 2

NKO

LEGEND

NUMBER	REV.	VARIATION	DIM "X"	DIM "Y" REF
BC22E-10	B1	1700322-01	10 FT.	
BC22E-25	B1	1700322-02	25 FT.	
BC22E-35	B1	1700322-03	35 FT.	
BC22E-50	B1	1700322-04	50 FT.	
BC22E-75	B1	1700322-05	75 FT.	
BC22E-02	A1	1700322-11	2 FT.	

NOTES:

1. FOR CABLE CONFIGURATION REFER TO A-PS-1700322-0-0.

WIRE TABLE

ITEM NO.	PAIR NO.	DESCRIPTION AWG	DESCRIPTION COLOR	TO CONN	TO WITH	FROM CONN	FROM WITH	REMARKS
2 OR 3 OR 4 OR 5 OR 6		24	BLK	P1-1		P2-1		
			BRN	P1-2		P2-2		
			RED	P1-3		P2-3		
			ORN	P1-4		P2-4		
			YEL	P1-5		P2-5		
			GRN	P1-6		P2-6		
			BLU	P1-7		P2-7		
			VLT	P1-8		P2-8		
			GRY	P1-11		P2-11		
			WHT	P1-12		P2-12		
			WHT/YEL	P1-18		P2-18		
			WHT/BLK	P1-19		P2-19		
			WHT/BRN	P1-20		P2-20		
			WHT/RED	P1-22		P1-22		
			WHT/ORN	P1-23		P2-23		
			WHT/GRN	P1-25		P2-25		
		24	—	P1-SHELL		P2-SHELL		SHIELD & DRAIN WIRE

REVISION HISTORY			
DATE	ECO NUMBER	REV.	
3-82	ORIGINATED	A	
	BC22E-MK001	B	
	STEVE ALLEN		14-NOV-85

UNLESS OTHERWISE SPECIFIED DIMENSIONS ARE IN INCHES AND THE FOLLOWING TOLERANCES APPLY (PER DEC STD 114)

DESCRIPTION	DRAWING NO.	PART NO	ITEM NO.

INCHES TOLERANCES	ANGLES ± 0° 30'	APPLICABLE DIMENSION RANGE (CHECK ONE)	DIMENSIONS RANGE IN INCHES					
			OVER 0 TO 0.2	OVER 0.2 TO 1.2	OVER 1.2 TO 4.0	OVER 4.0 TO 12.0	OVER 12.0 TO 40.0	OVER 40.0 TO 60.0
X = ± .1	SURFACE QUALITY	☐	± .02		± .03	± .05	± .10	
XX = ± .02		☐						
XXX = ± .005	MICROINCHES	☐	± .004	± .008	± .012	± .016	± .024	± .04

QUANTITY & VARIATION

THIRD ANGLE PROJECTION

DO NOT SCALE DRAWING

REMOVE BURRS AND BREAK SHARP CORNERS

MATERIAL

FINISH

		DATE
DRN.	S. Zelek	14-Nov-82
CHK'D	J. Falkowski	13-DEC-82
DES ENG.		
RESP ENG		
MFG ENG		

NEXT HIGHER ASSY K-DD-BC22E-0

TITLE CABLE, NULL MODEM

digital

DOCUMENT NUMBER

SIZE C CODE UA NUMBER BC22E-0-0 REV B

SCALE NONE SHEET

SIZE C CODE UA NUMBER BC22E-0-0 REV B

*** DRAWING DIRECTORY ***

UNIT VARIATIONS

VAR	TITLE
BC17E-25	V.35 CABLE, 25 FT LONG

USED ON OPTION/MODEL

DECSA

DRN. R.J. RILEY	DATE 7-27-83
CHK'D R.J. RILEY	DATE 7-27-83
PROJ. ENG. J. BUZYNSKI	DATE 7-27-83
PROD. B. SWAN	DATE 7-27-83

SHEET 1 OF 2

digital

TITLE:

CABLE, V.35 MODEM

SIZE	CODE	NUMBER	REV
K	DD	BC17E-0-DBF	A

DIST.

TW

	DRAWING NUMBER	DESCRIPTION	
1	K-PL-BC17E-0-DBP	CABLE, V.35 MODEM PARTS LIST	E/M
	A-PS-1700359-0-0	CABLE, V.35 MODEM FCC COMP.	E/M
2	D-AD-BC17E-0-0	CABLE, V.35 MODEM	

DRAWING NUMBER	DESCRIPTION	

TYPE: E = ELECTRICAL
M = MECHANICAL
E/M = ELECTRO/MECHANICAL

|d|i|g|i|t|a|l|

TITLE:
CABLE, V.35 MODEM

SHEET 2 OF 2	SIZE	CODE	NUMBER	REV
	K	DD	BC17E-0-DBF	A

TW

LEGEND				
FROM		TO		REMARKS
CONN	WITH	CONN	WITH	
P1-V		P2-8		
P1-X		P2-26		
P1-R		P2-6		
P1-T		P2-24		
P1-Y		P2-5		
P1-a		P2-23		
P1-p		P2-4		
P1-S		P2-22		
P1-U		P2-17		
P1-W		P2-35		
P1-D		P2-9		
P1-B		P2-19		
P1-C		P2-7		
P1-B		P2-19		
P1-F		P2-13		
P1-B		P2-19		
P1-E		P2-11		
P1-B		P2-19		
P1-J		P2-15		
P1-B		P2-19		
P1-H		P2-12		
P1-B		P2-19		
P1-K		P2-10		
P1-B		P2-19		
P1-A		P2-1		
P1 A		P2-1		

LEGEND	
PART NO.	DIM "X"
BC17E-25	25 FT.
BC17E-50	50 FT.
BC17E-A0	100 FT.
BC17E-A5	150 FT.
BC17E-B0	200 FT.
BC17E-B5	250 FT.

NOTE:
1. SHIELD IS CONNECTED TO THE SHELL AT BOTH ENDS AND TO BRAIDED PIGTAILS AT THE P1 END.

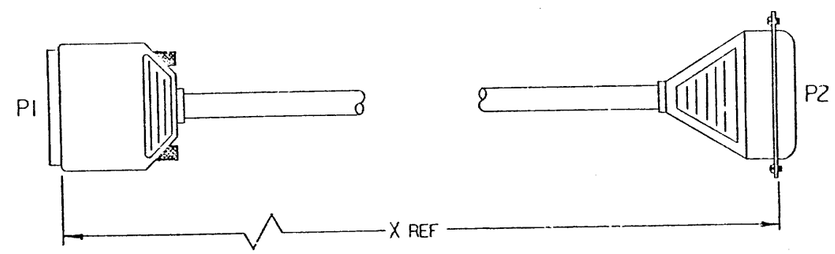

CAUTION: SEE OFF SHEET PARTS LIST
K-PL-BC17E-0-DBP. (Z7331B)

REVISION HISTORY		
DATE	ECO NUMBER	REV
	BC17E-TY001	B

	DESCRIPTION	DRAWING NO.	PART NO.	ITEM NO.
	UNLESS OTHERWISE SPECIFIED DIMENSIONS ARE IN INCHES AND THE FOLLOWING TOLERANCES APPLY (PER DEC STD 114)			

INCHES TOLERANCES	ANGLES ±0°30'	APPLICABLE DIMENSION RANGE (CHECK ONE)	DIMENSION RANGE IN INCHES					
			OVER 0 TO 0.2	OVER 0.2 TO 1.2	OVER 1.2 TO 4.0	OVER 4.0 TO 12.3	OVER 12.0 TO 40.0	OVER 40.0 TO 80.0
X = ±.1	SURFACE QUALITY	☐		±.02	±.03	±.05	±.10	
XX = ±.02		☐	±.004	±.008	±.012	±.016	±.024	±.04
XXX = ±.005	MICROINCHES	☐						

QUANTITY & VARIATION

THIRD ANGLE PROJECTION

DO NOT SCALE DRAWING

REMOVE BURRS AND BREAK SHARP CORNERS

MATERIAL: SEE PARTS LIST

FINISH

		DATE
DRN	Phil Tousignant	30 Aug 83
CHKD		1 Nov 83
DESIGN ENG		1 Nov 83
REPR ENG		1 Nov 83
MFG ENG		1 Nov 83

NEXT HIGHER DOC: K-DD-BC17E-0-0

TITLE: CABLE, V.35 MODEM

digital

DOCUMENT NUMBER: SIZE D, CODE AD, NUMBER BC17E-0-0, REV B

SHEET 1 OF 1

TW

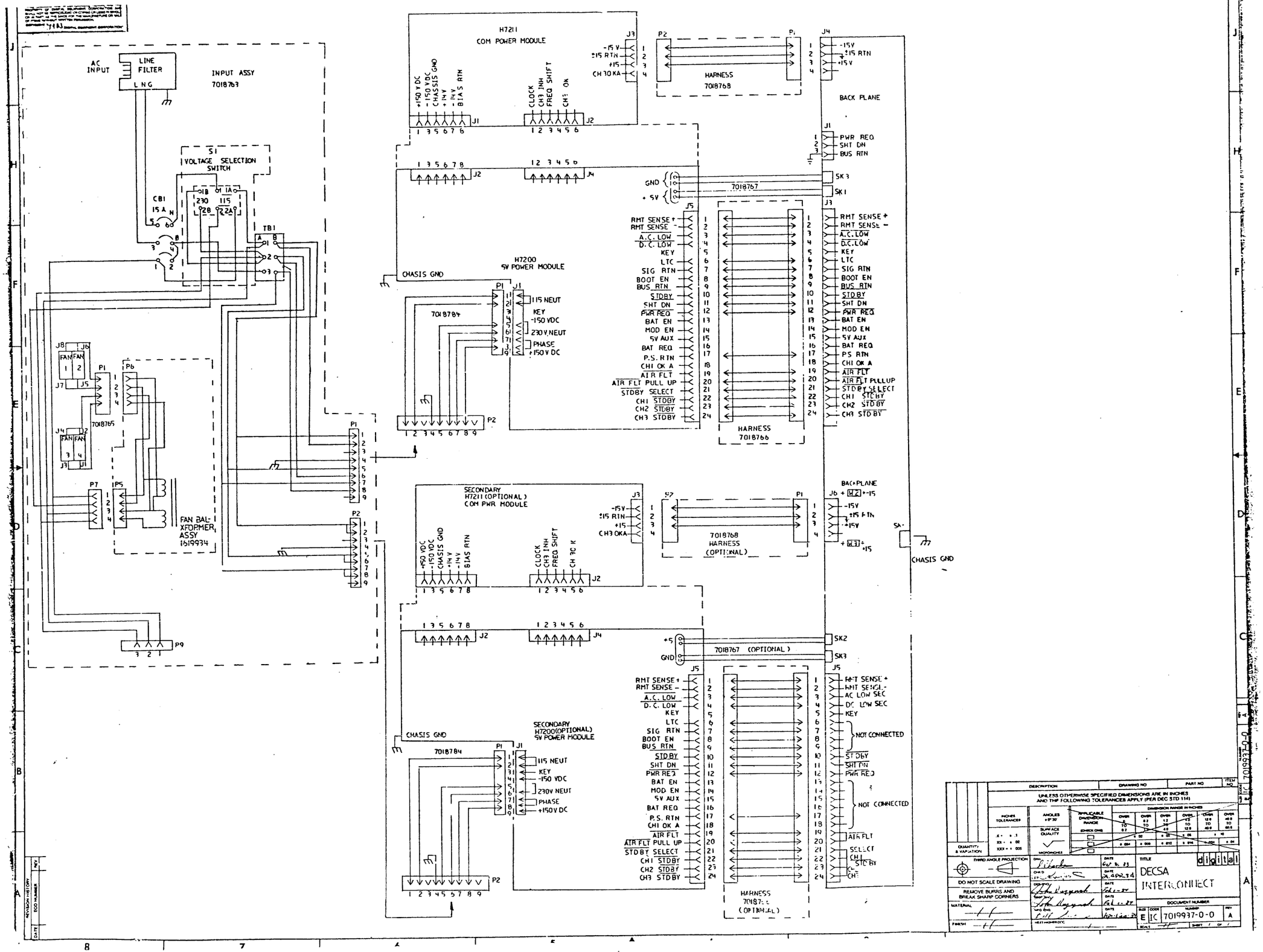
AC INPUT
LINE FILTER
L N G
INPUT ASSY 7018763
S1 VOLTAGE SELECTION SWITCH
CB1 15 A
TB1
FAN BAL XFORMER ASSY 1619934
7018765
H7211 COM POWER MODULE
+150 VDC
-150 VDC
CHASSIS GND
+14 V
-14 V
BIAS RTN
CLOCK
CH3 INH
FREQ SHIFT
CH3 OK
-15 V
±15 RTN
+15
CH 3 OKA
HARNESS 7018768
BACK PLANE
PWR REQ
SHT DN
BUS RTN
SK3
SK1
7018767
GND
+5V
H7200 5V POWER MODULE
CHASIS GND
7018784
115 NEUT
KEY
-150 VDC
230V NEUT
PHASE
+150 V DC
RMT SENSE +
RMT SENSE -
A.C. LOW
D.C. LOW
KEY
LTC
SIG RTN
BOOT EN
BUS RTN
STDBY
SHT DN
PWR REQ
BAT EN
MOD EN
5V AUX
BAT REQ
P.S. RTN
CH1 OK A
AIR FLT
AIR FLT PULL UP
STDBY SELECT
CH1 STDBY
CH2 STDBY
CH3 STDBY
HARNESS 7018766
SECONDARY H7211 (OPTIONAL) COM PWR MODULE
7018768 HARNESS (OPTIONAL)
BACKPLANE
CHASIS GND
7018767 (OPTIONAL)
SECONDARY H7200 (OPTIONAL) 5V POWER MODULE
NOT CONNECTED
HARNESS 7018766 (OPTIONAL)
DO NOT SCALE DRAWING
REMOVE BURRS AND BREAK SHARP CORNERS
digital
DECSA INTERCONNECT
DOCUMENT NUMBER
7019937-0-0
REVISION HISTORY