1984 IC MASTER

VOLUME I

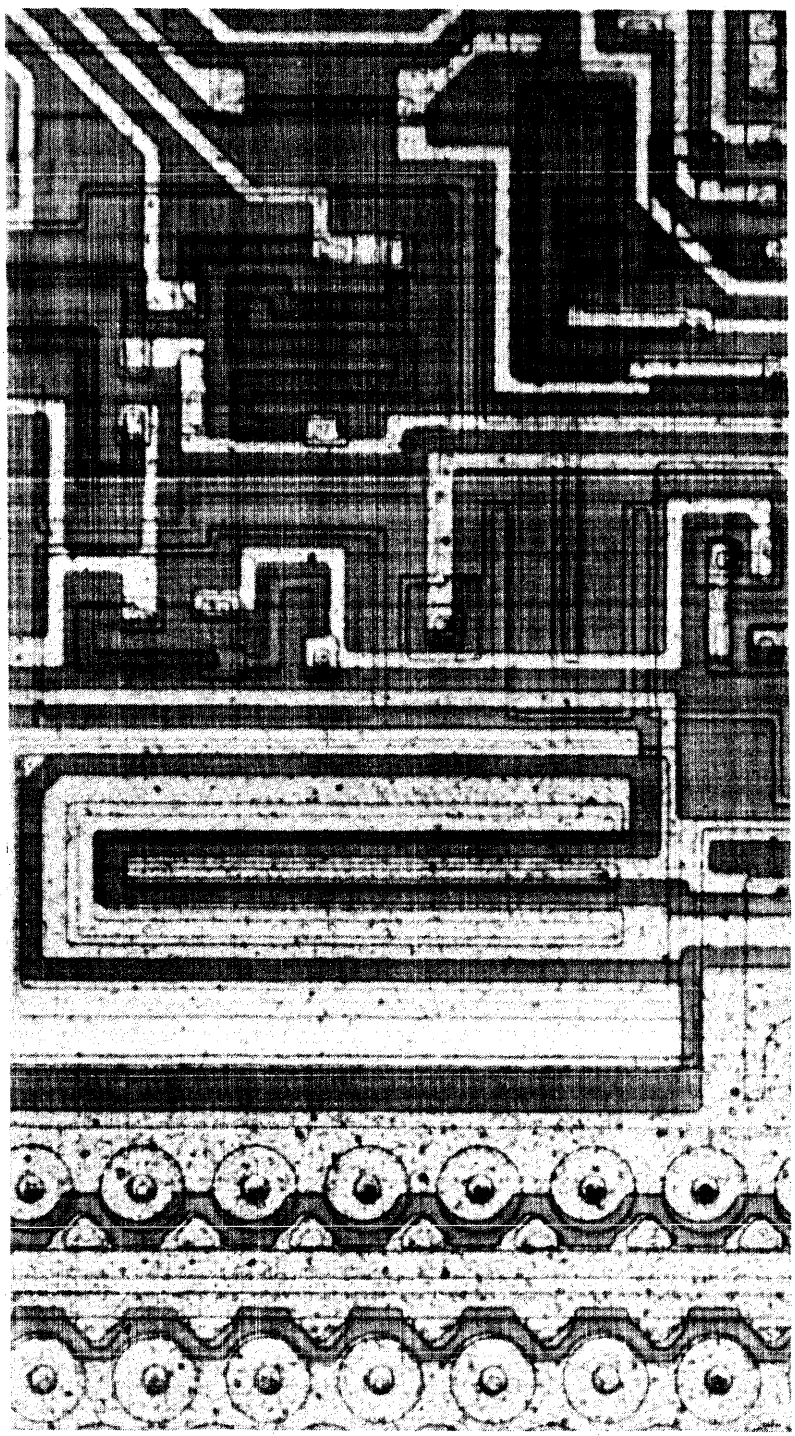

Courtesy of Intel Corporation

CONTENTS

VOLUME I

Introduction to IC MASTER	3
Advertisers' Index	8
Master Selection Guide (Function) Index	10
Part Number Index	40
Part Number Guide	200
Logo Guide	246
Application Note Directory	249
Military Parts Directory	451
Testing	456
Cross Reference	458
QPL Selection Guide	464
Abbreviations of Company Name	502
Digital Devices	566
International Distributors	777
Microprocessors	1250
Selection Tables	1256
System Components	1336
Microprocessor Development Systems	1800
Microcomputer Boards	1950
Support Board Index	1990
Advertisers' Product Index	2101
Alternate Source Directory	2301

VOLUME II

Introduction to IC MASTER	2603
Advertisers' Index	2608
Interface Devices	2610
Abbreviations of Company Names	2809
International Distributors	2815
Linear Devices	3150
Memory Devices	3750
PROM Programmers	4350
Custom/Semicustom Devices	4425
Manufacturers and Distributors Directory	4953

© IC MASTER 1984

1984 IC MASTER

VOLUME I

Engineering design begins with the IC MASTER

Editor, **Dave Howell**
Technical Director, IC Division, **Jerry Metzger**
Assistant Editors, **Addie Bisignano, Gail LoBue, Kathy Schmidt**
Production Director, **Dan Chillak**
Manager, Catalog Production, **Lanny Levin**
Catalog Design Director, **Michelle Arnold**
Assistant Catalog Design Director, **Bill Hennessey**
Art/Production Supervisor, **Charlotte Newman**
Art Staff, **Edith Cyran, Carol Hansen, Mary Koczanowski, Marie Santonastaso**
Production Assistants, **Brenda Buff Lynn Giardina**
Typographical Consultant, **Don Burchell**
Circulation Manager, **Georgeann Johnson**
Promotion Manager, **Deborah Towers**
Book Sales Manager, **Marie Botta**
Sales Billing Supervisor, **Aline Lewin**

HEARST BUSINESS COMMUNICATIONS, INC./ UTP DIVISION
President, **Manley P. Ludwig**
Vice President, **Robert J. Males**
Director of Editorial Planning & Research, **Frank T. Egan**

HEARST BUSINESS COMMUNICATIONS, INC.
President, **Robert J. Males**

THE HEARST CORPORATION
President, **Frank A. Bennack, Jr.**
Chairman, **Randolph A. Hearst**
Group Vice President, Books and Business Publishing **Gordon L. Jones**
Publishing Consultant, **Richard E. Deems**

HEARST BUSINESS COMMUNICATIONS, INC./ UTP DIVISION

East Coast:
645 Stewart Avenue
Garden City, NY 11530
Tel: (516) 222-2500 Telex II 510-222-1673 (UTP GRCY)

West Coast:
1333 Lawrence Expressway, Suite 101
Santa Clara, CA 95051
Tel: (408) 248-8044 Telex II 910-338-0272

IMPORTANT NOTICE
Considerable effort has been expended to make IC MASTER accurate and complete, but IC MASTER cannot assume responsibility for inaccuracies, omissions, manufacturers' claims, or their representations. No portion of this book may be reproduced without express written permission of the publisher. © IC MASTER, solely owned by Hearst Business Communications, Inc./UTP Division, 1984.

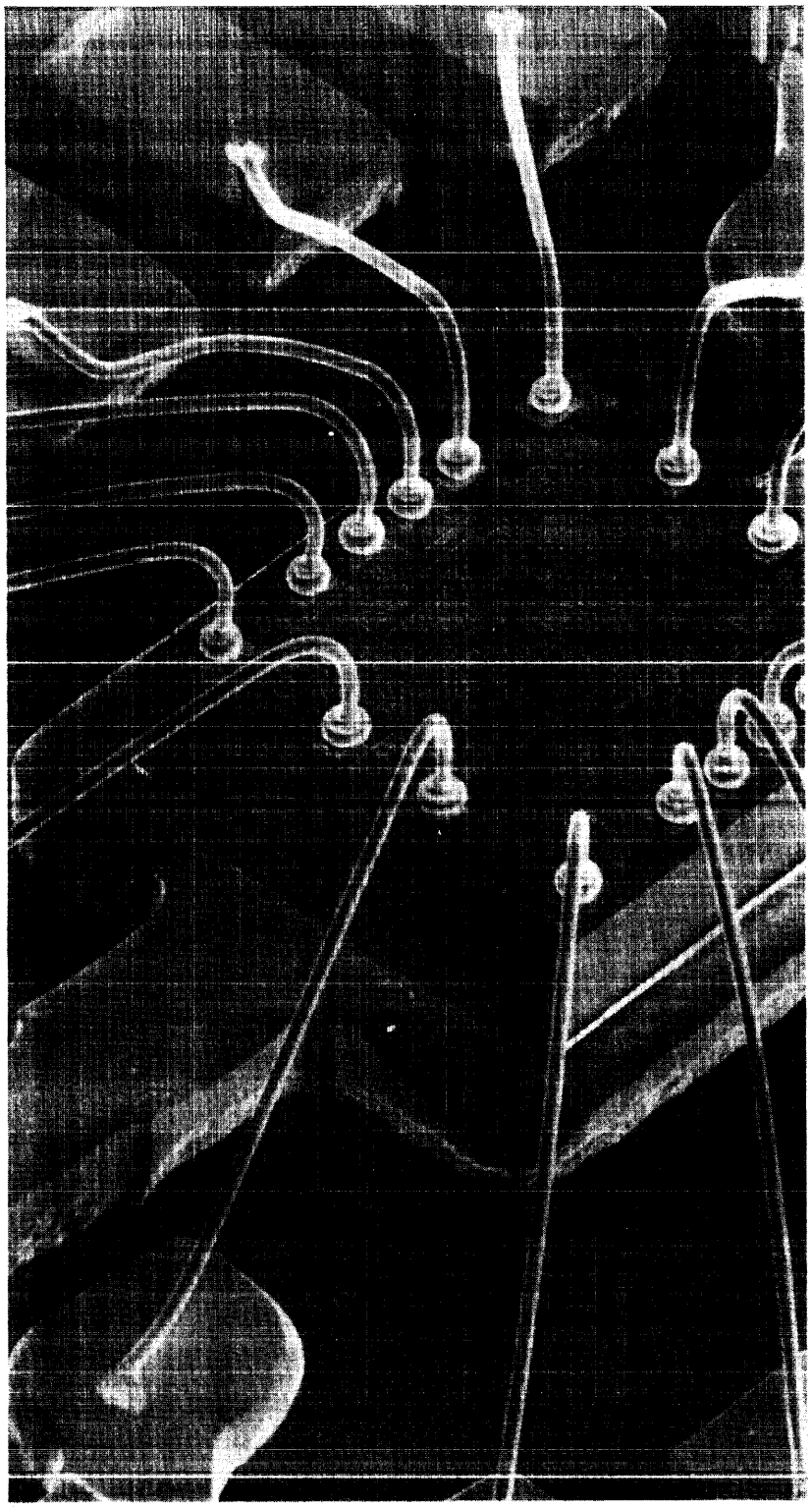

Courtesy of Delco Electronics

IMPORTANT FEATURES OF YOUR IC MASTER

ONE COMPLETE SOURCE

IC MASTER is the original and only complete guide to currently available integrated circuits, microcomputer boards, development systems, PROM programmers, gate arrays, and other related components of concern to the design engineer. It has become the first place to look in the critical selection of ICs, boards, systems, and equipment. If only one device can fit the requirements of a new design or if hundreds are available, you can find out in seconds by using the IC MASTER.

EASY TO USE

The IC MASTER saves you time. No longer do you have to spend long, tedious hours and days searching through manufacturers' catalogs and data sheets for information. The MASTER gives you—at your fingertips—an easy way to narrow your IC choices quickly, accurately, and systematically with the knowledge that you have just surveyed the entire industry.

PART NUMBER INDEX

This revolutionary index lists all device types made by over 225 manufacturers in numerical sequence excluding prefixes or suffixes. You can find a device number even though you do not know either the full part number or even the manufacturer. Once a basic device number is located in the index, you can obtain instant identification of all manufacturers making a device by that number, regardless of function, and determine the full part number designation. All page references to data sheet material and any existing application note abstracts are also provided. The Part Number Index should not be used as an alternate source directory because two manufacturers may use the same part number, by coincidence, for totally different devices.

PART NUMBER GUIDE

The information in this guide allows you to break down each company's part numbering system into product temperature ranges, packaging variations, and functions. It is an invaluable tool for the elimination of costly and time-consuming ordering errors caused by lack of standardization from manufacturer to manufacturer in part numbering systems.

APPLICATION NOTE DIRECTORY

Application note descriptions are arranged alphabetically by function and application category. Each note's description identifies the specific device or devices featured, provides a 25 to 30 word abstract, and identifies both the manufacturer that originated the note and the specific application note number. This section provides all the information necessary for you to update your application note files speedily, or thoroughly research the existence of application note material for a specific design problem.

MILITARY PARTS DIRECTORY

Cross reference chart identifies all IC devices having received JAN qualification. This chart includes a cross reference listing of device numbers and corresponding military standard 38510 slash numbers and vice versa.

MILITARY DEVICE TESTING TABLE

This table identifies IC manufacturers who test to military standard 38510 and the screening to military standard 883 that they provide.

MILITARY PARTS INDEX

This guide to JAN qualifed parts makes it possible to search devices by function, and to determine if a JAN qualified part exists for a particular functional need.

ADVERTISERS' PRODUCT INDEX

This index directs you to detailed product information for the parts whose manufacturers have included data sheets in IC MASTER. When you are looking for data on a particular manufacturer's products, this index provides the fastest way to find the information you seek.

ALTERNATE SOURCE DIRECTORY

The most comprehensive industry-wide, pin-for-pin, functional equivalent Alternate Source Directory ever compiled. This directory is updated by asking all IC manufacturers to identify each competitive device for which they make a pin-for-pin substitute.

MASTER SELECTION GUIDE

Each guide is organized by specifications and categories to direct you easily and quickly to the device most likely to fill your requirements for a particular application. Once you find those devices that are closest to your needs, you see available sources, and are directed to additional data if provided by advertisers.

MANUFACTURERS AND DISTRIBUTORS DIRECTORY

Locations and phone numbers are given for manufacturers' field sales offices, representatives, and distributors, both domestic and international.

MASTER SELECTION GUIDE INDEX
pg. 10

PART NUMBER INDEX
pg. 40

PART NUMBER GUIDE
pg. 200

APPLICATION NOTE DIRECTORY
pg. 249

© IC MASTER 1984

Typical Problems Solved by IC MASTER

• Find All Products That Meet Desired Specifications
• Obtain Data For A Particular Device • Decode Part Numbers
• Determine Alternate Sources • Plus Much More

An engineer can use IC MASTER to solve a wide variety of problems. Answers provided to engineers by IC MASTER can range from finding the device that best meets a particular set of specifications to helping to determine which family of devices should be used in building a system.

Some of the typical problems that IC MASTER can solve are illustrated in the following examples:

Who makes a TTL 4-bit binary full-adder with look-ahead carry?

All functions are listed, in alphabetical order, in the Master Selection Guide Index. In this case, the engineer looks under adders; in the column adjacent to adders, he sees that all types of adders are listed. The particular adder being sought is covered in the Digital section of IC MASTER.

Now that the engineer knows that the devices he seeks are catalogued in the Digital section, he can turn to the Digital Master Selection Guide and see the page number where information on these devices can be obtained.

When he turns to this page, he will notice that certain device numbers and manufacturers are printed in bold face type while others appear in regular type face. Bold face type is used whenever a part's manufacturer has provided a data sheet for the device in IC MASTER. The page number assigned to the data sheet also appears in bold face type so that the engineer can turn to it directly.

Who Makes a High-Speed 12-Bit, Analog-to-Digital Converter With Guaranteed ± ½ LSB Linearity and 13-μsec or Faster Conversion Time?

Many manufacturers make devices that meet these specifications including Analog Devices, Burr-Brown, Datel-Intersil, Data Device Corp., Harris, Hybrid Systems, Micro Networks, and Teledyne Philbrick.

The Master Selection Guide for Interface makes it possible for an engineer to find every device that meets the above specifications, regardless of who makes it, in seconds.

The Interface section is organized by product classification; an engineer can turn immediately to the category of interest such as analog switches with drivers, multiplexers, a/d converters with binary output a/d converters with decimal output, d/a converters, display drivers, error checking circuits, keyboard encoder-decoders, line drivers, line transceivers, memory and peripheral drivers, sense amplifiers, etc.

To find every 12-bit analog-to-digital converter with guaranteed ± ½ LSB linearity and 13-μsec or faster conversion time, all an engineer has to do is turn directly to the analog-to-digital converter section of the Interface Master Selection Guide.

In this section, devices are organized by key parameters. Under resolution, the engineer finds 12-bit; next he looks under linearity error for ± ½ LSB and then he looks under conversion time for devices with 13-μsec or faster specifications.

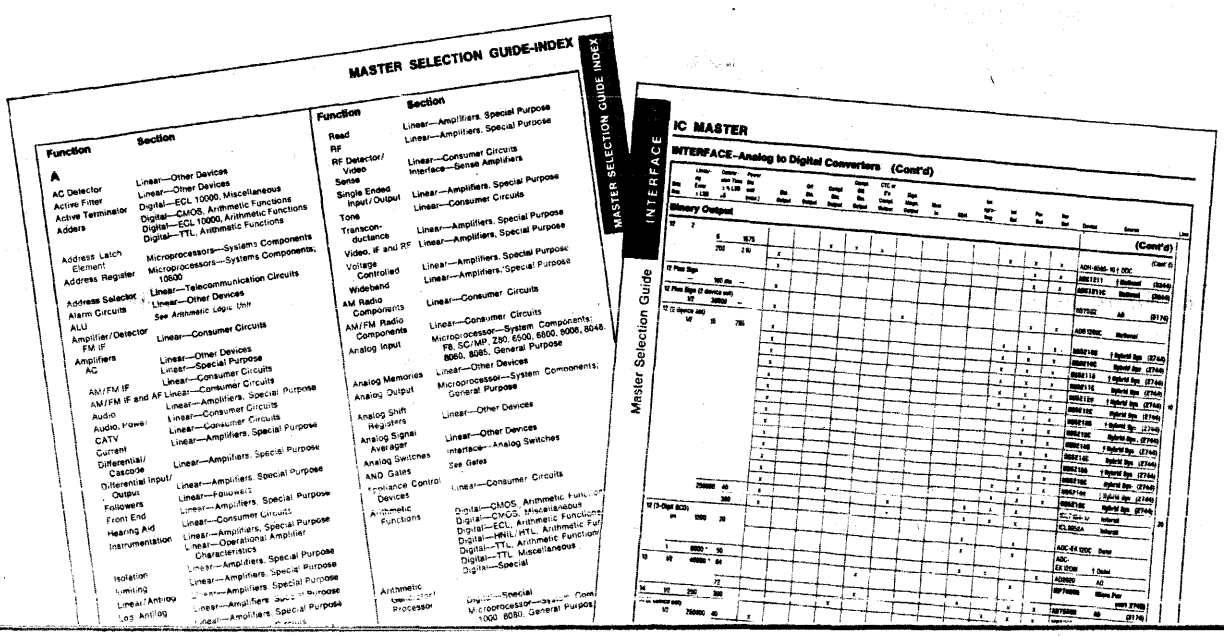

© IC MASTER 1984

Ways to Use IC Master

What application notes are available on emulating logic functions with PROMs?

IC MASTER provides the most complete listing of application notes available in print. It is easy to find the right application notes by looking in IC MASTER because the application note directory is organized by function.

There are two ways to look up an application note. An engineer can turn to the index page and find the appropriate function or category such as instrumentation amplifiers, multiplexers, or PROMs.

If he knows the device number, he can look it up in the part number index at the front of IC MASTER and see all of the application notes concerning that device. For example, under 8275, a programmable CRT controller listed in the part number index, the reader is referred to the listing for an Intel application note entitled "CRT Terminal Design Using the 8275 and 8279."

To find an application note concerning the use of PROMs to emulate logic functions, the engineer can turn to the application note section on PROMs and see what notes can be of help.

Each listing in the application note directory provides a detailed descriptive passage for the note, gives its length and identifies the manufacturer who publishes it.

Who makes a 64K dynamic RAM with an access time of 120 ns or faster?

The Memory Section in IC MASTER has a Master Selection Guide which provides initial selection information and data on PROMs, RAMs, ROMs and other types of memories. Each device is characterized by organization (words and bit/word) and access time.

For example, if an engineer was looking for a 64K dynamic RAM, his first step would be to determine organization (words and bit/word). Next, he would locate the desired access time.

When devices are available made by various processes such as NMOS, CMOS, ECL, TTL, etc., the engineer can choose the device that best suits his needs. For further definition, output type, supply voltage and number of pins are listed along with the manufacturer's part number and name.

The engineer's next step in his memory selection process would be to study the applicable data for 64K dynamic RAMs provided by IC manufacturers and pick the most appropriate device. Literally hundreds of pages of engineering data on memories appear in IC MASTER.

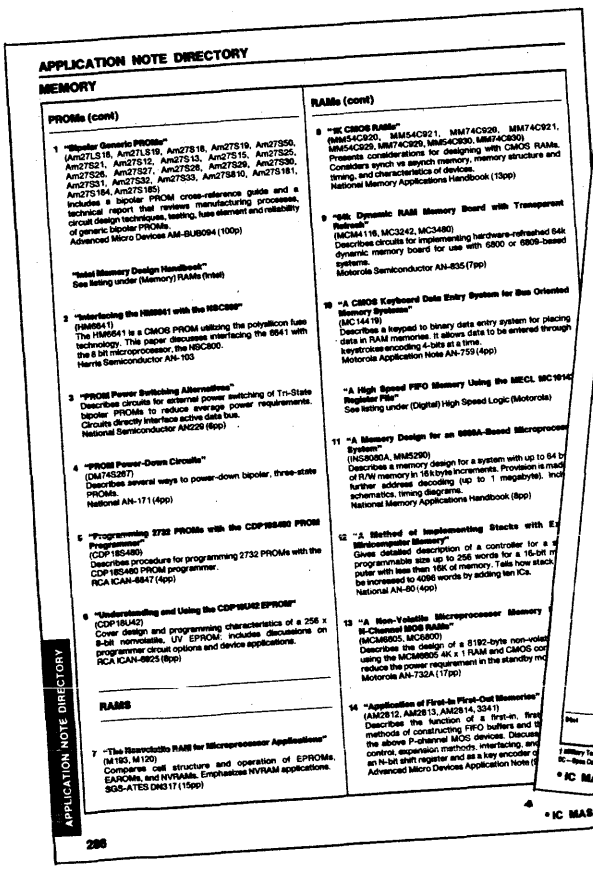

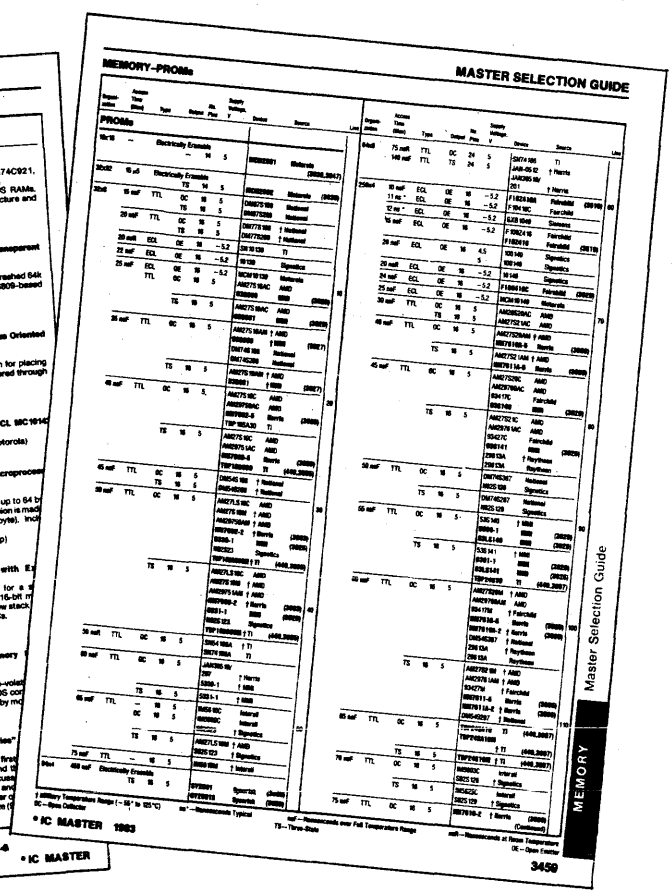

Ways to Use IC Master

I need to choose between a full custom or a semi-custom/gate array solution to my design problem.

To help designers weigh custom solutions against semi-custom/gate array approaches, IC MASTER provides a Master Selection Guide on Custom/Semi-Custom and a special section entitled "Options for Going Custom." In this section, the advantages and disadvantages of various custom/semi-custom techniques are covered.

The capabilities of IC manufacturers are tabulated for easy comparison; additional information such as available design aids and testing services is also provided.

My application requires microcomputer boards. How do I start?

Single and multiple board microcomputers are arranged by manufacturer. Under each manufacturer, boards are grouped in sequence according to data word size and, within that grouping, according to the microprocessor on which they are based. Hardware and software support are listed for each board.

A supplementary selection guide is included for microcomputer support boards. The boards are grouped according to supported computer systems.

With so many mircoprocessors available, where do I begin?

Simply turn to the Master Selection Guide for Microprocessors. There you will find a listing of all microprocessors currently available and key parameters allowing you to narrow down your selection to a range of products that will meet your major requirements.

Once the microprocessor that best fits the application has been chosen, the next step is to go to the "system components" section. Here all of the available peripheral devices that work with each microprocessor are arranged by function. Thus, if the microprocessor that has been selected is the 8048, system components specifically developed for use with the 8048 are listed, organized by function.

A "general purpose" section follows the "system components" section and describes devices that can be used with more than one microprocessor family.

Finally, hundreds of pages of the latest microprocessor data sheets, provided by IC manufacturers, are presented, arranged in alphabetical order by manufacturer. Each data sheet is easily found thanks to bold-faced page-number references in the Master Selection Guide.

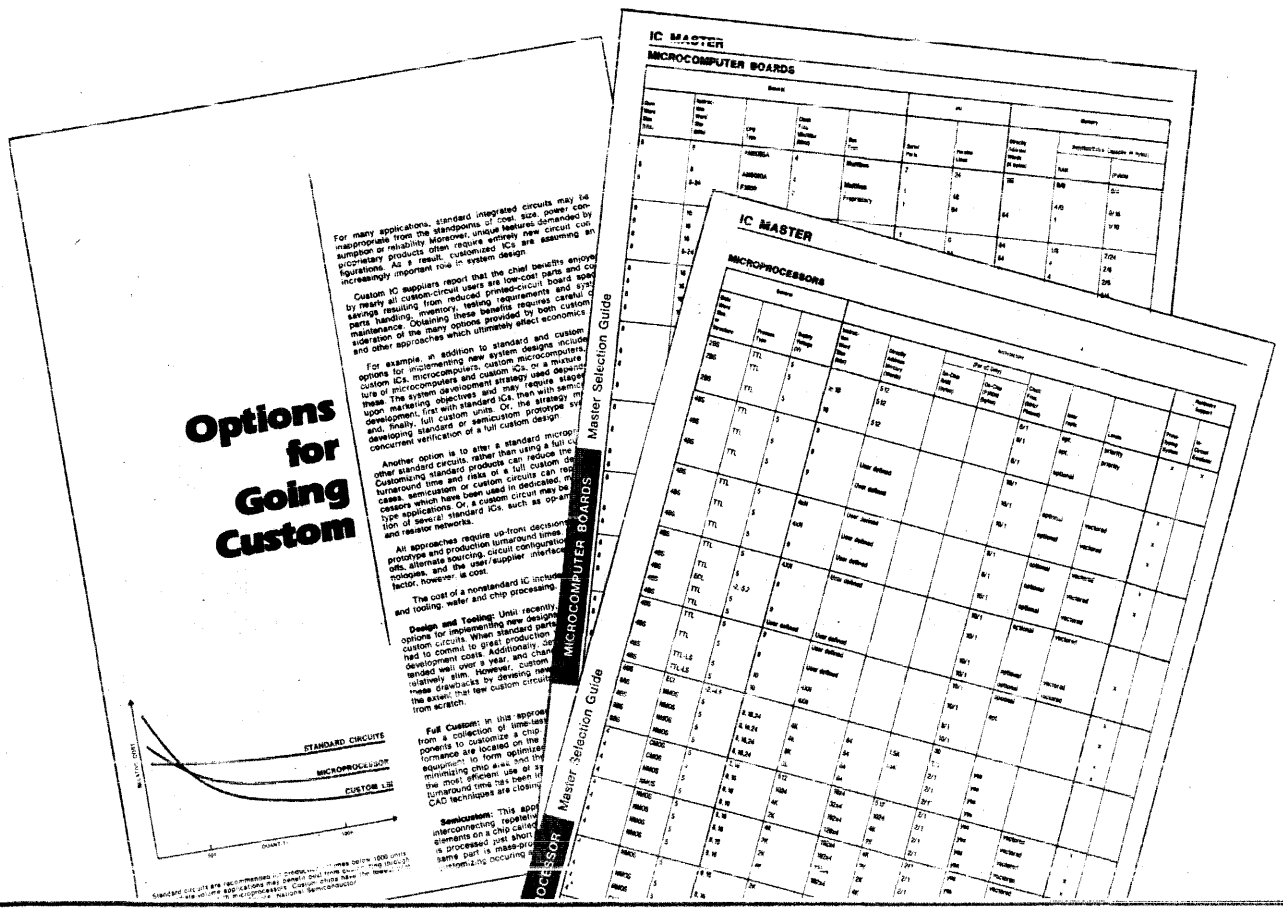

© IC MASTER 1984

Ways to Use IC Master

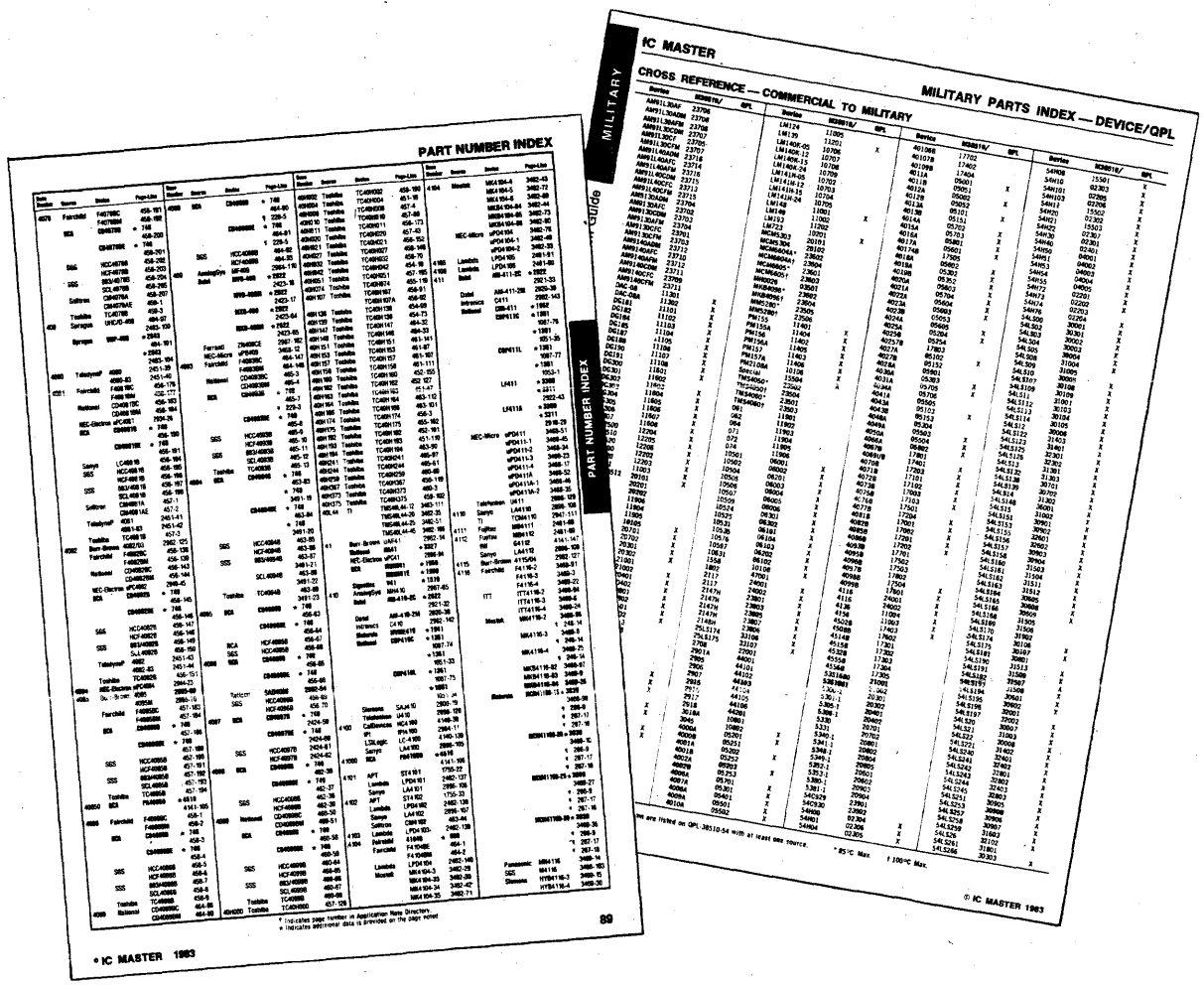

If an engineer knows that the basic part number is 6508, where does he look first?

The place to look is the part number index. Here, all of the prefixes and suffixes have been stripped away to leave only the basic number. This makes it possible to see the manufacturer of every part with the same base number at a glance. Parts with the same base number, it should be kept in mind, are not necessarily identical; in fact, one could be a memory while another might be a linear device. (To find replacements, one should look in the alternate source directory, not in the part number index.)

Under 6508, the engineer would see a number of devices listed and the page and line numbers where data is given for each of the devices. If an application note concerning any of the devices is available, the location of its listing is also shown.

I design to military specs. Where can I find the latest QPL devices?

The IC MASTER includes a comprehensive military parts directory. Within this directory, tables and charts are provided to answer virtually every information need of the engineer involved in military or high-reliability equipment design.

All integrated circuits with JAN qualification are listed in IC MASTER. A cross reference table, relating device numbers to mil spec numbers, is arranged according to device number. A second table, arranged by M-38510 number, makes it possible to look up the part number when the mil spec number is known.

In addition, ICs are also organized by product section and function, which allows the user to find the proper IC without having to know either the commercial or the military part number.

This section of IC MASTER also includes a table showing the capability of manufacturers to perform MIL-STD-883 screening and high-reliability testing.

ADVERTISERS INDEX

Advanced Micro Devices
Digital 701-703
Microprocessor 1401-1446
Microprocessor Development Systems 1901
Microcomputer Boards 2001-2005
Interface 2801-2808
Linear 3301-3338
Memory 3901-3930
Custom/Semicustom 4600-4613
American Automation
Microprocessor Development Systems 1902
American Microsystems, Inc.
Digital 705
Microprocessor 1448-1453
Interface 2810-2814
Linear 3339-3349
Memory 3932-3936
Custom/Semicustom 4614-4625
Analog Devices
Digital 706, 707
Interface 2816-2847
Linear 3350-3363
Arrow Electronics, Inc. 4952
Barvon Research, Inc. 4626, 4627
Burr-Brown Corp.
Interface 2848-2853
Citel
Custom/Semicustom 4628, 4629
Cromemco, Inc.
Microcomputer Boards 2006-2037
Custom MOS Arrays, Inc.
Custom/Semicustom 4630-4633
Datel
Microcomputer Boards 2039
Interface 2855-2865
Diplomat Electronics Corp.
Manufacturers and Distributors Directory
Emulogic
Microprocessor Development Systems 1904, 1905
Exar Integrated Systems, Inc.
Linear 3365-3391
Fairchild
Digital 708-776
Microprocessor 1454-1471
Microprocessor Development Systems 1906-1912
Custom/Semicustom 4634-4635
Fujitsu America, Inc.
Memory 3938-3941
Fujitsu Microelectronics, Inc.
Custom/Semicustom 4637-4642
Harris Semiconductor
Microprocessor 1472-1499
Interface 2866-2980
Linear 3392-3471
Memory 3943-3969
Custom/Semicustom 4644-4744

© IC MASTER 1984

Hitachi America, Ltd.
Memory 3970-3975
Holt, Inc.
Custom/Semicustom 4745
Hybrid Systems Corp.
Interface 2981-2986
Immos Corp.
Military 501
Microprocessor Development Systems 1913
Memory 3977-3981
Integrated Device Technology, Inc.
Memory 3982-4019
Intel Corp.
Memory 4021-4025
Interdesign, Inc.
Custom/Semicustom 4746
International Microcircuits, Inc.
Custom/Semicustom 4747
International Microelectronic Products
Custom/Semicustom 4749
Intersil Corporation
Application Notes 350, 351
Digital 778-802
Microprocessor 1500
Interface 2988-3041
Linear 3472-3528
Custom/Semicustom 4751-4759
LSI Computer Systems, Inc.
Digital 803
Custom/Semicustom 4761
LSI Logic Corp.
Custom/Semicustom 4762, 4763
Micrel
Custom/Semicustom 4765
Micro Networks
Interface 3042-3045
Micro Power Systems
Military 503
Interface 3046, 3047
Linear 3529
Custom/Semicustom 4766, 4767
Mitel Semiconductor
Interface 3048-3059
Monolithic Memories, Inc.
Digital 804-819
Memory 4026-4045
Custom/Semicustom 4768-4795
Motorola Semiconductor
Digital 820-824
Microprocessor 1501-1512
Microprocessor Development Systems 1914-1925
Microcomputer Boards 2040-2046
Interface 3060-3070
Linear 3530-3536
Memory 4046-4056
Custom/Semicustom 4796, 4797
National Semiconductor
Military 504-507
Microprocessor 1513-1529
Microprocessor Development Systems 1926-1929
Microcomputer Boards 2047-2051
Linear 3537-3541
Memory 4057-4071
NEC Electronics
Microprocessor 1531-1586
Linear 3543-3555
Memory 4073-4117
Custom/Semicustom 4799-4813
OKI Semiconductor
Memory 4118, 4119
Oliver Advanced Engineering, Inc.
PROM Programmers 4401
Panasonic
Digital 826-835
Microprocessor 1587-1589
Linear 3556-3559
Memory 4120-4129
Plessey Semiconductors
Interface 3071-3075
Linear 3561-3564
Custom/Semicustom 4815-4821
Precision Monolithics, Inc.
Linear 3565-3574
Raytheon Co.
Military 508, 509
Linear 3576-3592
Memory 4130-4132
Custom/Semicustom 4822, 4823
RCA
Military 510-512
Digital 836-843
Microprocessor 1590-1595
Linear 3593-3604
Custom/Semicustom 4824, 4825
Schweber Electronics 404, 2300, 4404
SEEQ Technology, Inc.
Military 513-519
Microprocessor 1597-1606
Memory 4133-4139
Semi Processes, Inc.
Digital 844-856
Custom/Semicustom 4826
Si-Fab Corp.
Custom/Semicustom 4827
Signetics Corp.
Military 521-534
Digital 857-913
Microprocessor 1607-1695
Microprocessor Development Systems 1930
Microcomputer Boards 2052, 2053
Linear 3605-3684
Memory 4141-4207
Custom/Semicustom 4829-4871
Silicon Systems, Inc.
Linear 3685
Memory 4208
Custom/Semicustom 4872
Siliconix, Inc.
Interface 3077-3086
Sprague Electric Co.
Interface 3087-3089
Structured Design, Inc.
PROM Programmers 4402
Sunrise Electronics, Inc.
PROM Programmers 4403
Synertek, Inc.
Military 535
Microprocessors 1696, 1697
Memory 4210-4211
Custom/Semicustom 4873-4875
Teledyne Semiconductor
Interface 3091-3101
Telmos, Inc.
Custom/Semicustom 4877
Texas Instruments
Application Notes 352-403
Military 536-546
Digital 915-1158
Microprocessor 1698-1719
Microprocessor Development Systems 1931
Microcomputer Boards 2055-2057
Interface 3103-3108
Linear 3687-3701
Memory 4212-4248
Custom/Semicustom 4878-4929
TRW LSI Products
Digital 1159-1170
Linear 3702-3707
Unitrode Corporation
Linear 3709-3711
Universal Semiconductors, Inc.
Custom/Semicustom 4930
VLSI Technology, Inc.
Memory 4249-4258
Custom/Semicustom 4931-4936
Western Digital Corp.
Digital 1172-1175
Microprocessor 1720-1735
Microcomputer Boards 2058-2061
Interface 3109-3112
Memory 4260-4263
Wintek Corporation
Microcomputer Boards 2062
Xicor, Inc.
Military 547
Memory 4265-4269
Zilog, Inc.
Microprocessor 1737-1760

MASTER SELECTION GUIDE INDEX

(Guide to Product Categories)

When you know the desired function and need specific devices that perform this function, use this index first. Alphabetically, look up the function in which you are interested. For information on appropriate devices that provide this function, you will be directed to one of the following Master Selection Guides:

Master Selection Guide	Starts on Page No.
Military	451
Digital	566
Microprocessor	1250
Microprocessor Development Systems	1800
Microcomputer Boards	1950
Microcomputer Support Boards	1990
Interface	2610
Linear	3150
Memory	3750
PROM Programmers	4350
Custom/Semicustom	4425

HOW TO USE THE MASTER SELECTION GUIDES

These guides provide sufficient information to help the engineer make an initial product selection, or to lead him to a group of device numbers and their manufacturers. They make it possible to find the products most likely to satisfy the needs of a particular application. All devices that appear in a selection guide are included in the Part Number Index. If the part number for a device is known by the reader, by referring to the Part Number Index, he can see the page and line number for data on that device. If the manufacturer of the device has included a data sheet in IC MASTER with supplementary data, the location of this data sheet is also listed.

All integrated circuits which are intended for consumer applications (such as calculator chips, TV game chips, and organ frequency dividers) are combined under one heading for the reader's convenience; **Linear**—Consumer Circuits. The TTL major families, TTL, TTL-LS, TTL-H, and TTL-s, have been combined to facilitate function comparisons. The **Microprocessor** section includes, in addition to system selection charts, microprocessor system components grouped under the microprocessor type for which they are suited. The **Microcomputer Board** section groups boards alphabetically by manufacturer, and then in sequence according to data word size and the microprocessor on which they are based.

The **Microprocessor (MPU) Development Systems** and **PROM Programmers** are ordered alphabetically by manufacturer, and then described by specific performance parameters.

© IC MASTER 1984

Function	Section
A	
AC Phase Control	Linear—Other Devices
AC Detector	Linear—Other Devices
Active Filter	Linear—Other Devices
Active Terminator	Digital—ECL 10000, Miscellaneous
ADC Subsystem	Linear—Other Devices
Adders	Digital—CMOS, Arithmetic Functions Digital—ECL 10000, Arithmetic Functions Digital—TTL, Arithmetic Functions
Address Latch Element	Microprocessors—Systems Components
Address Register	Microprocessors—Systems Components; 10800
Address Selector	Linear—Telecommunication Circuits
Air Flow Sensor	Linear—Other Devices
Alarm Circuits	Linear—Other Devices
ALU	*See Arithmetic Logic Unit*
Amplifier/Detector FM IF	Linear—Consumer Circuits
Amplifiers	
AC	Linear—Other Devices Linear—Amplifiers, Special Purpose
AM/FM IF	Linear—Consumer Circuits
AM/FM IF and AF	Linear—Consumer Circuits
Audio	Linear—Amplifiers, Special Purpose Linear—Consumer Circuits
CATV	Linear—Consumer Circuits
Current	Linear—Amplifiers, Special Purpose
Differential/ Cascode	Linear—Amplifiers, Special Purpose
Differential Input/ Output	Linear—Amplifiers, Special Purpose
Followers	Linear—Followers
Front End	Linear—Amplifiers, Special Purpose
Hearing Aid	Linear—Consumer Circuits
Instrumentation	Linear—Amplifiers, Special Purpose Linear—Operational Amplifier Characteristics
Isolation	Linear—Amplifiers, Special Purpose
Limiting	Linear—Amplifiers, Special Purpose
Linear/Antilog	Linear—Amplifiers, Special Purpose
Log/Antilog	Linear—Amplifiers, Special Purpose
Microphone	Linear—Amplifiers, Special Purpose
Mixer/RF	Linear—Consumer Circuits
Operational	Linear—Operational Amplifier Characteristics Linear—Operational Amplifiers, General Purpose Linear—Operational Amplifiers, High Output Current Linear—Operational Amplifiers, High Voltage Linear—Operational Amplifiers, Low Bias Current Linear—Operational Amplifiers, Low Drift Linear—Operational Amplifiers, Programmable Linear—Operational Amplifiers, Single Supply Linear—Operational Amplifiers, Wide Band
Power	Linear—Amplifiers, Special Purpose Linear—Consumer Circuits
Preamplifier	Linear—Amplifiers, Special Purpose Linear—Consumer Circuits
Programmable Gain	Linear—Amplifiers, Special Purpose
Read	Linear—Amplifiers, Special Purpose
RF	Linear—Amplifiers, Special Purpose
RF Detector/ Video	Linear—Consumer Circuits
Sense	Interface—Sense Amplifiers
Single Ended Input/Output	Linear—Amplifiers, Special Purpose
Tone	Linear—Consumer Circuits
Transcon-ductance	Linear—Amplifiers, Special Purpose
Video, IF and RF	Linear—Amplifiers, Special Purpose
Voltage Controlled	Linear—Amplifiers, Special Purpose
Wideband	Linear—Amplifiers, Special Purpose
AM Radio Components	Linear—Consumer Circuits
AM/FM Radio Components	Linear—Consumer Circuits
Analog Memories	Linear—Other Devices
Analog Shift Registers	Linear—Other Devices
Analog Signal Processor	Linear—Other Devices
Analog Switches	Interface—Analog Switches
AND Gates	*See Gates*
Appliance Control Devices	Linear—Consumer Circuits
Arithmetic Functions	Digital—CMOS, Arithmetic Functions Digital—CMOS, Miscellaneous Digital—ECL, Arithmetic Functions Digital—HNIL/HTL, Arithmetic Functions Digital—TTL, Arithmetic Functions Digital—TTL, Miscellaneous Digital—Special
Arithmetic Processor	Digital—Special Microprocessor—System Components; 1000, 8080, General Purpose
Arithmetic Logic Element	Digital—TTL, Arithmetic Functions
Arithmetic Logic Register Stack	Digital—CMOS, Arithmetic Functions Microprocessor—System Components; Macrologic Bipolar, Macrologic CMOS
Arithmetic Logic Unit	Digital—CMOS, Arithmetic Functions Digital—ECL 10000, Arithmetic Functions Digital—ECL 100K, Arithmetic Functions Digital—TTL, Arithmetic Functions Microprocessor—System Components; IMP, 10800
ARINC-429 Receiver/ Transmitter	Interface—Transmitters-Receivers
Arrays	
Bipolar	Linear—Arrays
CMOS	Linear—Arrays, Special Arrays
Thyristor/ Transistor	Linear—Arrays, Special Arrays
Transistor	Linear—Arrays, Transistor Arrays
Transistor/Diode	Linear—Arrays, Special Arrays

© IC MASTER 1984

Function	Section
ASTRO	Interface—Transmitters-Receivers
Asynchronous Communication Controller	Microprocessor—System Components
Asynchronous Communications Element	Microprocessor—System Components; 8080
Asynchronous Communications Interface Adapter	Microprocessor—System Components; 6500 Interface—Transmitters-Receivers
Asynchronous/ Synchronous Transmitter/ Receiver	*See ASTRO*
Attenuator	Linear—Consumer Circuits Linear—Other Linear Devices
Audio Circuits	Linear—Consumer Circuits
Audio Equalizer	Linear—Consumer Circuits
Audio Noise Reduction	Linear—Consumer Circuits
Audio Signal Delay	Linear—Consumer Circuits
Automotive Circuits	Linear—Consumer Circuits

B

Function	Section
Balanced Modulator/ Demodulator	Linear—Other Devices
Bandpass Filters	Linear—Telecommunication Circuits
Bar Graph Display Driver	Interface—Display Drivers
Baseband Channel Amplifier	Linear—Telecommunication Circuits
Baseband Modem	Linear—Telecommunication Circuits
Baud Rate Generator	Digital—Special Interface—Serial Transmitters-Receivers
BCD Rate Multiplier	Digital—CMOS, Miscellaneous
Bidirectional Bus Driver	Microprocessor—System Components; 8048, 8080, 8085A
Bidirectional Port	Microprocessor—System Components; 2650
Bidirectional Transceiver	Interface—Line Circuits, Line Transceivers Microprocessor—System Components
Binary Rate Multiplier	Digital—CMOS, Miscellaneous
Bit Programmable I/O	Microprocessor—System Components; SC/MP
Bit Rate Generator	Digital—CMOS, Miscellaneous Interface—Transmitters-Receivers Microprocessor—System Components; Macrologic CMOS, 6100
Blowout Resistant Transistor	Linear—Other Devices
BOART (Bus Oriented ART)	Interface—Transmitters-Receivers
Branch Control Unit	Microprocessor—System Components
Bubble Memories	Memory—RAMs, Bubble
Bubble Memory Controller	Interface—Memory and Peripheral Drivers Interface—Display Drivers, Microprocessor—9900, Peripheral Controllers
Bubble Memory Coil Driver	Interface—Memory and Peripheral Devices
Bubble Memory Function Driver	Interface—Memory and Peripheral Devices
Bubble Memory Sense Amplifier	Interface—Memory and Peripheral Devices
Bucket Brigade Device	Linear—Other Circuits *Also See Analog Shift Registers*
Buffers	Digital—CMOS, Buffers/Inverters Digital—CMOS, Miscellaneous Digital—ECL 10000, Buffers Digital—HNIL/HTL, Buffers/Inverters Digital—TTL, Buffers/Inverters Digital—TTL, Drivers Digital—Transceivers, Bus Microprocessor—System Components
Bus Interface Circuits	Interface—Line Circuits Microprocessor—System Components
Bus Receiver	Digital—ECL 10000, Miscellaneous Interface—Line Circuits
Bus Switch	Digital—TTL, Miscellaneous
Bus Transceiver	Digital—ECL 10000, Miscellaneous Digital—TTL, Miscellaneous Interface—Line Circuits Microprocessor—System Components; MicroNOVA, 2900, 6800
Bus Translator	Microprocessor—System Components
Bus Extender and Repeater	Digital—TTL, Miscellaneous

C

Function	Section
Calculator Circuits	Linear—Consumer Circuits
Calculator, Printing	Linear—Consumer Circuits
Camera Exposure Control	Linear—Consumer Circuits
Cassette Cartridge Data Handler	Microprocessor—Peripheral Controllers
Cassette Controller	Microprocessor—System Components; 8080, 8085A, Peripheral Controllers
CATV Amplifiers	Linear—Consumer Circuits
CB Circuits	Linear—Consumer Circuits Linear—Phase Locked Loop Circuits
CCD Memories	Memories—RAMs, CCD Memories
Central Processing Unit	*See Microprocessor—System Components*
Character Generators	Memory—Character Generators
Chronographs/ Watches	Linear—Consumer Circuits
Citizens Band Radio Circuits	*See CB Circuits*
Click Suppressor	Linear—Telecommunication Circuits
Climate Controller	Microprocessor—System Components; TMS1000

© IC MASTER 1984

Function	Section
Clock	Digital—CMOS, Oscillators/Dividers Linear—Consumer Circuits
Clock Buffer	Interface—Memory and Peripheral Drivers Microprocessor—System Components; 6800
Clock Driver	*See Drivers*
Clock Generator	Microprocessor—System Components; PPS-4, 2900, 6800, 8000, 8080
Codec	Linear—Telecommunication Circuits
Code Converters	Memory—Code Converters
Code Identification System (Manchester)	Digital—CMOS, Miscellaneous Interface—Transmitters-Receivers
Compander	Linear—Telecommunication Circuits
Comparators, Digital	Digital—CMOS, Arithmetic Functions Digital—ECL 10000, Arithmetic Functions Digital—ECL III, Arithmetic Functions Digital—HNIL/HTL, Arithmetic Functions Digital—TTL, Arithmeic Functions
Comparators, Linear	Linear—Comparators, Single Comparators Linear—Comparators, Dual Comparators Linear—Comparators, Quad Comparators Linear—Phase Locked Loop Circuits
Comparator, Voltage (Analog Input-Digital Output)	Digital—TTL, Miscellaneous
Complementer	*See Nines Complementer*
Compressor (Compander)	Linear—Telecommunication Circuits
Constant Current Source	Linear—Other Devices
Contact Bounce Eliminator	Digital—TTL, Miscellaneous
Control Store Sequencer	Microprocessor—System Components; 2900, General Purpose
Converters	
Analog to Digital	Interface—Analog to Digital Converters, Binary Output Interface—Analog to Digital Converters, Decimal Output Linear—Other Devices
BCD to Binary	Digital—TTL, Miscellaneous
BCD to Binary/ Binary to BCD	Digital—TTL, Miscellaneous
Digital to Analog	Interface—Digital to Analog Converters
Frequency to Voltage	Linear—Other Devices
Logic Level	Digital—CMOS, Buffers/Inverters
Serial to Parallel	Digital—Special
Voltage to Frequency	Linear—Other Devices
Correlation	Digital—Special Linear—Other Devices
Counter	Digital—CMOS, Counters, Miscellaneous Digital—ECL III, Counters Digital—HNIL/HTL, Counters Digital—TTL, Counters, Miscellaneous Digital—Special
Binary	Digital—CMOS, Counters, Binary Digital—ECL 10000, Counters, Binary Digital—ECL III, Counters Digital—HNIL/HTL, Counters Digital—TTL, Binary Counters Up Digital—TTL, Binary Counters Up/Down Digital—Special
Decade	Digital—CMOS, Counters, Decade Digital—ECL 10000, Counters, Decade Digital—ECL III, Counters Digital—HNIL/HTL, Counters Digital—TTL, Decade Counters Up Digital—TTL, Decade Counters Up/Down Digital—TTL, Miscellaneous Digital—Special
Counter Logic Control	Linear—Phase Locked Loop Circuits
Counter Time Base	Digital—Special Microprocessor—System Components; Z80
Count Extender	Linear—Phase Locked Loop Circuits
Counting Register	Digital—ECL 100K, Counters
CPU	*See Microprocessor*
CRC Generator/ Checker	Interface—Error Checking Circuits Microprocessor—System Components; Macrologic Bipolar
Crosspoint Array	Linear—Telecommunications Circuits
Crosspoint Switches	Interface—Analog Switches, Multiplexers
CRT Controller	Microprocessor—System Components; Peripheral Controllers
CRT Video Timer Controller	Microprocessor—System Components; General Purpose
Crystal Oscillator	*See Oscillators*
Current Booster/ Amplifier	Linear—Amplifiers, Special Purpose
Custom Arrays	Custom/Semicustom Section
Custom Circuits	Custom/Semicustom Section
Cyclic Redundancy Checker	Digital—TTL, Miscellaneous

D

Darlington Switch	Interface—Memory and Peripheral Drivers Linear—Arrays
Data Access Register	Digital—CMOS, Arithmetic Functions Microprocessor—System Components; Macrologic Bipolar, Macrologic CMOS
Data Acquisition Controller	Interface—Memory and Peripheral Drivers Linear—Other Devices
Data Acquisition System	Linear—Other Devices Microprocessor—System Components; 8080, 8085A, Z80
Data Encryption System	Digital—TTL, Miscellaneous; Other Digital Devices Microprocessor—System Components; Macrologic Bipolar, 6800, 8080
Data Link Controller	Interface—Transmitters-Receivers Microprocessor—System Components; 6800

© IC MASTER 1984

Function	Section
Data Path Switch	Digital—CMOS, Arithmetic Functions Linear—Analog Switches Microprocessor—System Components; Macrologic Bipolar, Macrologic CMOS
Data Security Device	Digital—Special Microprocessor—System Components; 6800
Data Selector/ Multiplexer	*See Multiplexers*
Decade Sequencer	Digital—TTL, Miscellaneous
Decoder	Digital—CMOS, Decoders Digital—CMOS, Drivers Digital—ECL 10000, Decoders Digital—ECL 100K, Decoders Digital—TTL, Decoders Digital—CMOS, Drivers Digital—Special Interface—Display Drivers Microprocessor—System Components
FM Stereo	Linear—Consumer Circuits
Keyboard	Interface—Keyboard Encoders, Decoders
Tone	Linear—Phase Locked Loop Circuits
Deglitcher	Linear—Telecommunication Circuits
Delay Line	Linear—Other Devices
Delta Modulation System	Linear—Other Devices Linear—Telecommunication Circuits
Demultiplexer	*See Decoders*
Deskew FIFO	Memory—FIFO Microprocessors—General Purpose
Deskew—Queue Register	Interface—Error Checking Circuits
Detectors	Linear—Consumer Circuits Linear—Other Devices
Development System	Microprocessor—System Components
Dialer Circuits	Linear—Telecommunication Circuits
Digital Filter Switch	Linear—Telecommunication Circuits
Digital Mixer	*See Mixer*
Digital Modulator	Microprocessor—System Components; 6800
Digital to Analog Converters	Interface—Digital to Analog Converters
Diode Arrays	Linear—Arrays
Diode Matrix, Programmable	Digital—Special
Direct Memory Access Controller	*See DMA Controller*
Disk Memory Drivers	Interface—Memory and Peripheral Drivers
Fault Detector	Interface—Memory and Peripheral Drivers
Head Read/Write Circuit	Interface—Memory and Peripheral Drivers
Head Selector	Interface—Memory and Peripheral Drivers
Video Amplifier	Interface—Memory and Peripheral Drivers
Winchester Read/Write Circuit	Interface—Memory and Peripheral Drivers
Display Controller	Microprocessor—System Components; PPS-4, 8080, Peripheral Controllers
Display Drivers	Interface—Display Drivers *Also See Drivers*

Function	Section
Dividers	Digital—CMOS, Oscillators/Dividers Digital—TTL, Miscellaneous Digital—Special Linear—Phase Locked Loop Circuits Linear—Other Devices
DMA Address Generator	Microprocessor—System Components
DMA Controller	Microprocessor—System Components; F8, PPS-4, Z80, 1600, 1610, 6800, 8000, 8080, 8085A, 9900, General Purpose
Dolby Circuits	*See Audio Noise Reduction*
Double Balanced Mixer	Linear—Phase Locked Loop Circuits
DPDT Switches	Interface—Analog Switches
DPST Switches	Interface—Analog Switches
Drivers	Digital—CMOS, Drivers Digital—CMOS, Miscellaneous Digital—ECL 10000, Drivers Digital—ECL 100K, Drivers Digital—HNIL/HTL, Drivers Digital—TTL, Decoders Digital—TTL, Drivers Digital—TTL, Miscellaneous Interface—Analog Switches, Drivers Interface—Display Drivers Interface—Line Circuits Interface—Memory and Peripheral Drivers
Audio	Linear—Consumer Circuits
Counter Display	Digital—Special
DVMs	Digital—Special Interface—Analog to Digital Converters, Decimal Output
Dynamic Memory Interface	Interface—Memory and Peripheral Drivers Microprocessor—System Components; F8
Dynamic Memory Refresh Controller	Digital—TTL, Miscellaneous Interface—Memory and Peripheral Drivers Microprocessor—System Components; 6800, 8080, 8085A

E

Function	Section
Encoders	Digital—CMOS, Miscellaneous Digital—ECL 10000, Miscellaneous Digital—ECL 100K, Miscellaneous Digital—TTL, Miscellaneous Digital—Special
Keyboard	Interface—Keyboard Encoder-Decoders
Keyboard to Binary	Digital—CMOS, Miscellaneous
Tone	Digital—CMOS, Miscellaneous Linear—Telecommunications Circuits
Error Checking Circuits	Digital—ECL10000, Miscellaneous Interface—Error Checking Circuits Microprocessor—System Components 2900
Error Pattern Register	Interface—Error Checking Circuits
Ethernet	Microprocessor—System Components; Peripheral Controllers
Expander	Digital—TTL-Gates, AND-OR/AND-OR Invert Digital—TTL, Miscellaneous
Expander (Compander)	Linear—Telecommunication Circuits
Extender	Digital—TTL-Gates, AND-OR/AND-OR Invert

© IC MASTER 1984

Function	Section
F	
Facsimile, Frequency Generator	Linear—Consumer Circuits
Fast Carry Extender	Digital—TTL, Arithmetic Functions
Fast Fourier Transformer	Linear—Telecommunication Circuits
Fiber Optics Transmitter/ Receiver	Digital—TTL, Miscellaneous Linear—Other Devices Microprocessor—9900
Fiber Optics Data Link	Linear—Other Devices
Field Programmable Array Logic	Custom/Semicustom—Programmable Logic
Field Programmable Logic Array	Custom/Semicustom—Programmable Logic Microprocessor—System Components
First In First Out Memory	Memory—FIFO Microprocessor—System Components
Flasher (LED)	Linear—Other Devices
Flip-Flops	Digital—CMOS, Flip-Flops Digital—ECL 10000, Flip-Flops Digital—ECL 100K, Flip-Flops Digital—ECL III, Flip-Flops Digital—HNIL/HTL, Flip-Flops Digital—TTL. Flip-Flops Digital—Special
Floating Point Arithmetic	Microprocessor—System Components; 8080
Floppy Disc Amplifier System	Linear—Amplifiers - Special Purpose
Floppy Disc Controller	Microprocessor—System Components; PPS-4, 1600, 6800, 8000, 8048, 8080, 8085A, 9900, Peripheral Controllers
Fluid Detector	Linear—Other Devices
Fluorescent Display Drivers	Interface—Display Drivers
FM Muting/Tuning Point System	Linear—Consumer Circuits
FM Radio Circuits	Linear—Consumer Circuits
FM RF/IF Amplifier	Linear—Consumer Circuits
Followers	Linear—Followers
Four Channel Sound	Linear—Consumer Circuits
Fourier Transform Circuit	Microprocessor—Peripheral Controllers
Frequency Divider	Digital—Special Linear—Consumer Circuits
Frequency Sensitive Switch	Linear—Telecommunication Circuits Linear—Other Devices
Frequency to Voltage Converter	Linear—Other Devices
FSK Modulator/ Demodulator	Linear—Phase Locked Loop Circuits
Function Generator	Linear—Phase Locked Loop Circuits

Function	Section
G	
Games, TV	Linear—Consumer Circuits
Gas Discharge Display Drivers	Interface—Display Drivers
Gate Arrays	Custom/Semicustom—Gate Arrays Custom/Semicustom—Linear Arrays Custom/Semicustom—Linear Digital Arrays
Gates	Digital—CMOS, Gates, Miscellaneous Digital—HNIL/HTL, Gates, Miscellaneous Digital—TTL, Gates, Miscellaneous
AND/NAND	Digital—CMOS, Gates, AND/NAND Digital—ECL 10000, Gates, AND/NAND Digital—HNIL/HTL, Gates, AND/NAND Digital—TTL, Gates, AND/NAND
AND-OR/AND-OR Invert	Digital—CMOS, Gates, AND-OR/ AND-OR Invert Digital—ECL 10000, Gates, AND-OR/ AND-OR Invert Digital—ECL 100K, Gates, AND-OR/ AND-OR Invert Digital—HNIL/HTL, Gates, AND-OR/ AND-OR Invert Digital—TTL, Gates, AND-OR/ AND-OR Invert
Exclusive OR/NOR	Digital—CMOS, Gates, Exclusive OR/NOR Digital—ECL 10000, Gates, Exclusive OR/NOR Digital—ECL 100K, Gates, Exclusive OR/NOR Digital—ECL III, Gates, Exclusive OR/NOR Digital—HNIL/HTL, Gates, Exclusive OR/NOR Digital—TTL, Gates, Exclusive OR/NOR
Majority Logic OR/NOR	Digital—CMOS, Gates, Miscellaneous Digital—CMOS, Gates, OR/NOR Digital—ECL 10000, Gates, OR/NOR Digital—ECL 100K, Gates, OR/NOR Digital—ECL III, Gates, OR/NOR Digital—TTL, Gates, OR/NOR Digital—Special
Gate Expander	Digital—HNIL/HTL, Gates, Miscellaneous
General Purpose Data Transceiver	Interface—Bus Digital—TTL, Miscellaneous
General Purpose Interface Adapter	Microprocessor—System Components; 6800, General Purpose
General Purpose Input/Output	Microprocessor—System Components; PPS-4, TLCS-12, 1600, 4004
General Purpose Interface Bus Controller	Microprocessor—8080, 8085A, 9900, 16000, General Purpose
General Purpose Keyboard and Display	Microprocessor—System Components; PPS-4
GPIB Talker Listener Interface	Interface—Line Circuits Microprocessor—System Components; 8080, 8085, 8086/88, Peripheral Controllers

© IC MASTER 1984

Function	Section
Graphics Display Controller	Microprocessor—System Components; Peripheral Controllers
Ground Fault Interrupter	Linear—Consumer Circuits
Gyrator	Linear—Telecommunications Circuits

H

Hall Effect Devices	Digital—Special Linear—Other Devices
Hammer Driver	Interface—Memory and Peripheral Drivers
Hamming Code Detector and Generator	Digital—TTL, Miscellaneous Interface—Error Checking Circuits
Hard Array Logic	Custom/Semicustom—Programmable Logic

I

Identity Comparator	Digital—TTL, Arithmetic Functions
Ignition Switching Circuit	Linear—Other Devices
Image Sensor	Linear—Other Devices
Impedance Converter	Linear—Other Devices
Input/Output Control Unit	Microprocessor—System Components
Interface Latch Element	Microprocessor—System Components; PACE
Interrupt Control Unit	Microprocessor—System Components; 3000
Interrupt Controllers, Programmable	Microprocessor—System Components, Various Families
Interrupt Controller	Microprocessor—General Purpose
Interrupter, Ground Fault	Linear—Consumer Circuits
Interval Timer	Linear—Timers Microprocessor—System Components; PPS-4, 8008, 8048, 8080, 8085
Inverters	Digital—CMOS, Buffers/Inverters Digital—HNIL/HTL, Buffers/Inverters Digital—HNIL/HTL, Gates, Miscellaneous Digital—TTL, Buffers/Inverters Digital—Special
I/O Expander	Microprocessor—System Components TMS1000, 8048, 8080, 8085A
I/O Port	Digital—TTL,Miscellaneous Microprocessor—System Components; SC/MP, 1800, 6100, 8X300, 8008, 8048, 8080,8005
I/O Register Array	Digital—TTL, Miscellaneous
I/O Transceiver	Microprocessor—System Components; MicroNOVA
I/O Transceiver Buffer	Microprocessor—System Components; MicroNOVA
IR Transmitter/Receiver	Linear—Telecommunication Circuits

K

Keyboard/Display Controller	Microprocessor—System Components; 8008, 8048, 8080, 8085
Keyboard Encoders	Interface—Keyboard Encoders, Decoders
Keyboard Interface, Programmable	Microprocessor—8085A

L

LAN Coax Receiver	Interface Microprocessor—System Components; 16000
Lamp Driver	Interface—Display Drivers
Last In First Out Memory	Memory—LIFOs
Latches	Digital—CMOS, Latches Digital—CMOS, Drivers Digital—ECL 10000, Latches Digital—ECL 100K, Latches Digital—ECL III, Latches Digital—HNIL/HTL, Latches Digital—TTL, Latches Microprocessor—System Components
LCD Display Drivers	Interface—Display Drivers
LED Display Drivers	Interface—Display Drivers
Level Detector	Linear—Other Devices
Level Meter	Linear—Other Devices
Level Shifter	Digital—CMOS, Translators Digital—ECL-10000, Translators Digital—HNIL/HTL, Translators Digital—TTL, Translators Interface—Memory and Peripheral Drivers
Light Activated Switch	Linear—Other Devices
Light Dimmer	Linear—Consumer Circuits
Light Detector	Linear—Other Devices
Light to Current Converter	Linear—Other Devices
Light to Frequency Converter	Linear—Other Devices
Line Drivers	Interface—Line Circuits, Single Ended Interface—Line Circuits, Differential
Line Receivers	Digital—ECL 10000, Miscellaneous Digital—ECL 100K, Miscellaneous Digital—ECL III, Miscellaneous Interface—Line Circuits, Single Ended Interface—Line Circuits, Differential
Line Transceiver	Interface—Line Circuits, Transceivers
Link Controller	Interface—Serial Transmitter-Receivers
Local Area Networks	Microprocessor—System Components; Peripheral Controllers
Look Ahead Carry Generator	Digital—CMOS, Arithmetic Functions Digital—ECL 10000, Arithmetic Functions Digital—ECL 100K, Arithmetic Functions Digital—TTL, Arithmetic Functions Microprocessor—System Components; 2900, 3000
Loop Disconnect Dialer	Linear—Telecommunication Circuits
Low Battery Indicator	Linear—Other Devices

© IC MASTER 1984

Function	Section
M	
Manchester Encoders/ Decoders	Microprocessors—System Components; Peripheral Controllers
Macroprogram Sequencer	Microprocessor—System Components; 2900
Magnitude Comparator	Digital—CMOS, Arithmetic Functions Digital—TTL, Arithmetic Functions
Manchester Code Identification System	*See Code Identification System*
Mask Merge	Digital—ECL100K, Shift Registers
Memories	
Active Element	Digital—TTL, Memories
Bubble	Memory—RAMs, Bubble
CAM	Digital—CMOS, Memories Digital—TTL, Memories
Character Generators	Memory—Character Generators
Code Converters	Memory—Code Converters
EAROM	Memory—E²PROM
E²PROM	Memory—E²PROM
FIFO	Digital—CMOS, Memories Digital—TTL, Memories Memory—FIFO, LIFO
LIFO	Digital—CMOS, Memories Memory—FIFO, LIFO
PLA	Custom/Semicustom—Programmable Logic
PROM	Digital—ECL 10000, Memories Memory—PROMs Microprocessor—System Components
NVRAM	Memory—E²PROMs
RAM	Digital—CMOS, Memories Digital—ECL 10000, Memories Digital—ECL 100K, Memories Digital—TTL, Memories Memory—E²PROMs Memory—RAMs, Bubble Memories Memory—RAMs, Dynamic Memory—RAMs, CCD Memories Memory—RAMs, Static Microprocessor—System Components
ROM	Digital—CMOS, Memories Memory—E²PROMs Memory—ROMs Microprocessor—System Components
Memory Address Driver	Microprocessor—System Components; MicroNOVA
Memory Control Unit	Microprocessor—System Components; TLCS-12, 2900, 9440
Memory Controller	Interface—Memory and Peripheral Drivers Microprocessor System Components; 6800
Memory Drivers	*See Drivers*
Memory Interface	Interface—Memory and Peripheral Drivers Microprocessor—System Components; 8000, 10800
Memory Management Unit	Microprocessor—System Components; 2900, EPIC, 6800, 16000, TLCS-12, 9440, 68000, 16000, iAPX-432
Memory Mappers	Digital—TTL, Miscellaneous Interface—Memory and Peripheral Drivers
Memory Refresh Logic Circuits	Digital—TTL, Miscellaneous Interface—Memory and Peripheral Drivers
Micro Address Generator	Digital—TTL, Miscellaneous
Microcomputer	Microprocessors Microprocessor—System Components; 1400, 1500, 2100, 6000, 6400, 8840, 8850, 88200, 8840, 88500, HD4470, HMCS-40, OLMS40, SM-4, TLCS-43, TLCS-46, TMS1000, TMS2000, μCOM-7, μCOM-75, PPS-4, PPS-8, 1650, 1800, 3870, 6500, 6800, 7000, 8048, 8051, Z8, μPD7810, 9900, 8096 *Also see Microprocessor*
Microcontroller	Digital—TTL, Arithmetic Functions Microprocessor—System Components; COP400, GENP, Macrolog, WD40 *Also see Microcomputer*
Microcomputer Boards	*Microcomputer Board Section*
Microcomputer Support Boards	*Microcomputer Board Section*
Microprocessor	Microprocessors Microprocessor—System Components; Macrologic Bipolar, Macrologic CMOS, 3000, 2900, 10800, 74S481/74LS481, 888, EPIC, 14500, COP400, PPS-4, PPS-8, 1600, 2650, 6500, 6800, 8080, 8085A, 9008, 8X300, F8, INS8060, NSC800, Z80, Z800, iAPX188, 1600, 8086, 8088, 16000, 6100, TLCS-12, 1610, 8000, 9440, 68000, MicroNOVA, Transputer, 80000, iAPX432 *Also see Microcomputers*
Microprocessor Development Systems	*MPU Development Systems Section*
Microprogram Control Unit	Microprocessor—System Components; 2900, 3000, 67000, 10800
Microprogram Sequencer	Digital—TTL, Miscellaneous Microprocessor—System Components; Macrologic Bipolar, Macrologic CMOS, 2900, 888
Microwave Oven Controller	Linear—Consumer Circuits
Mixer	Linear—Amplifiers, Special Linear—Phase Locked Loop Circuits
Modem	Digital—CMOS, Miscellaneous Interface—Transmitters-Receivers Linear—Telecommunication Circuits Linear—Other Devices Microprocessor—System Components; 6800, 9900
Modulator	Linear—Consumer Circuits Linear—Other Devices
Modulator/ Demodulator	Linear—Consumer Circuits Linear—Other Devices
Motor Control Devices	Interface—Memory and Peripheral Devices Linear—Consumer Circuits Linear—Other Devices
Motor Load Control	Linear—Other Devices
Motor Speed Regulator	Linear—Consumer Circuits Linear—Other Devices

© IC MASTER 1984

Function	Section
Multifunction Converter	Linear—Other Devices
MPCC	*See Multi-Protocol Communications Controller*
Multiplexers	
Analog	Interface—Analog Switches, Multiplexers Linear—Other Devices
Digital	Digital—CMOS, Multiplexers Digital—ECL 10000, Multiplexers Digital—ECL 100K, Multiplexers Digital—HNIL/HTL, Multiplexers Digital—TTL, Multiplexers Digital—Special
Multiplier	Digital—ECL 10000, Arithmetic Functions Digital—CMOS, Arithmetic Functions Digital—TTL, Arithmetic Functions Digital—Special Microprocessor—System Components;
Binary	Digital—CMOS, Arithmetic Functions
Binary Rate	Digital—CMOS, Miscellaneous Digital—TTL, Miscellaneous
Decade Rate	Digital—TTL, Miscellaneous
Multipliers/ Dividers, Analog	Linear—Other Devices Microprocessor—System Components
Multi-Processor Interface	Microprocessor—System Components; 9900
Multi-Protocol Communications Controller	Interface—Transmitters-Receivers Microprocessor—System Components; 2650, 8080
Multivibrators	Digital—CMOS, Multivibrators Digital—ECL III, Multivibrators Digital—HNIL/HTL, Multivibrators Digital—TTL, Multivibrators Digital—Special
Monostable/ Astable	Digital—CMOS, Multivibrators Digital—ECL 10000, Multivibrators Digital—ECL 100K, Multivibrators Digital—HNIL/HTL, Multivibrators Digital—TTL, Multivibrators
Music Circuits	Linear—Consumer Circuits
N	
NAND Gates	*See Gates*
Next Address Control Unit	Microprocessor—System Components; 2900
Nines Complementer	Digital—CMOS, Arithmetic Functions
Noise Generator	Linear—Other Devices
NOR Gates	*See Gates*
O	
Occam Programming System	Microprocessor—System Components; 8086, Transputer
Operational Amplifiers	Linear—Operational Amplifiers, Linear—Operational Amplifiers, Characteristics
Organ Circuits	Linear—Consumer Circuits
OR Gates	*See Gates*
Oscillators	Digital—CMOS, Oscillators/Dividers Linear—Phase Locked Loop Circuits Linear—Other Devices
Overvoltage Protector	Linear—Other Devices
P	
Parallel Data Controller	Microprocessor—System Components; PPS-4, Z80
Parity Generator	Digital—CMOS, Miscellaneous Digital—ECL 10000, Miscellaneous Digital—ECL 100K, Miscellaneous Digital—TTL, Miscellaneous Interface—Error Checking Circuits
Parity Tree	Digital—CMOS, Arithmetic Functions, Miscellaneous Digital—TTL, Miscellaneous
PCM Repeater	Linear—Telecommunication Circuits
Peak Detector	Linear—Other Devices
Peripheral Drivers	Interface—Memory and Peripheral Drivers
Peripheral Interface Input/Output	Microprocessor—System Components; F8, SC/MP, 8008, 8048, 8080, 8085, General Purpose
Peripheral Interface Adapter	Microprocessor—System Components; 6500, 6800
Peripheral Interface Element	Microprocessor—System Components; 6100
Phase Comparator	Digital—CMOS, Miscellaneous Interface—Phase Locked Loop Circuits
Phase Frequency Detector	Digital—TTL, Miscellaneous Linear—Phase Locked Loop Circuits
Phase Locked Loop Circuits	Digital—CMOS, Miscellaneous Digital—TTL, Miscellaneous Linear—Phase Locked Loop Circuits
Stereo Decoders	Linear—Consumer Circuits
PIA	*See Peripheral Interface Adapter*
PIN Diode Drivers	Digital—Other Digital Devices Linear—Other Devices
Polynomial Generator	Digital—TTL, Miscellaneous Interface—Error Checking Circuits
Potentiometer	Linear—Other Linear Devices
Power Supply Control	Linear—Voltage Regulators, Switching Regulators
Power Transistor Driver/Amplifier	Linear—Amplifiers, Special Purpose
Preamplifier Audio	Linear—Amplifiers, Special Linear—Consumer Circuits
Prescalers	Digital—Special Linear—Phase Locked Loop Circuits
Pressure Transducer	Linear—Other Devices

© IC MASTER 1984

Function	Section
Printer Controller	Interface—Memory and Peripheral Drivers Microprocessor—System Components; 6500, 8080, 9900, Peripheral Controllers
Printer Driver	Interface—Memory and Peripheral Drivers
Printer Interface	Microprocessor—System Components; PPS-4
Printing Calculator Circuits	Interface—Memory and Peripheral Drivers
Priority Encoder	Digital—CMOS, Miscellaneous Digital—TTL, Miscellaneous Microprocessor—System Components; 9900
Priority Interrupt	Microprocessor—System Components; 2900, 6800, 8008, 8048, 8080, 8085, General Purpose
Programmable Array Logic	Digital—TTL, Miscellaneous Custom/Semicustom—Programmable Logic
Programmable Communications Interface	Microprocessor—System Components; 2650, 8008
Programmable Interface Controller	Microprocessor—System Components
Programmable Keyboard/ Display Device	Interface—Keyboard Encoders
Programmable Logic Arrays	Custom/Semicustom—Programmable Logic
Programmable Synchronous/ Asynchronous Receiver	*See PSAR*
Programmable Synchronous/ Asynchronous Receiver/ Transmitter	*See PSART*
Programmable Synchronous/ Asynchronous Transmitter	*See PSAT*
Programmable Systems Interface	Microprocessor—System Components; 9900
Program Development Device	Microprocessor—System Components; 2100
Program Memory	Microprocessor—System Components; 8000
Program Stack	Microprocessor—System Components; Macrologic CMOS
Program Storage Unit	Microprocessor—System Components; F8 Memory—EPROMs
PROMs	Memory—PROMs Microprocessor—System Components
PROM Programmers	*PROM Programmer Section*

Function	Section
Protocol Controller	Microprocessor—System Components; 8080, 16000
PSAR	Interface—Transmitters-Receivers
PSART	Interface—Transmitters-Receivers
PSAT	Interface—Transmitters-Receivers
Pulse Stretcher	Digital—HNIL/HTL, Miscellaneous
Pulse Synchronizer/ Driver	Digital—TTL, Miscellaneous
Pulse Width Modulator	Linear—Voltage Regulators, Switching Regulators
Pulse Width to Voltage Converter	Linear—Other Devices

R

Radio Circuits	Linear—Consumer Circuits
Radio Transmitter	Linear—Other Devices
RAM Interface	Interface—Memory and Peripheral Drivers Microprocessor—System Components; 5781, 5799
RAMs	Memory—E²PROM Memory—RAMs Microprocessor—System Components
RAM and I/O	Microprocessor—System Components; 6500, 8048, 8080, 8085
Read Amplifier/ Preamplifier	Linear—Amplifiers, Special Purpose
Receiver AM	Linear—Consumer Circuits
Receiver AM/FM	Linear—Consumer Circuits
Receiver/Decoder	Interface—Transmitters/Receivers
Redundancy Checker	Digital—TTL, Miscellaneous Interface—Error Checking Circuits
Register File	Digital—TTL, Memories
Regulator, Motor Speed	Linear—Consumer Circuits
Regulator, Switching	Linear—Voltage Regulators, Switching
Regulator, Voltage	Linear—Voltage Regulators
Relay Driver	Interface—Memory and Peripheral Drivers Linear—Consumer Circuits
Remote Control Circuits	Linear—Consumer Circuits, TV Remote Control
Resolver Systems	Linear—Other Devices
Rhythm Circuit	Linear—Consumer Circuits
Ring Modulator	Linear—Other Devices
RMS to DC Converter	Linear—Other Devices
ROM Patch	Custom/Semicustom—Programmable Logic
ROMs	Memory—ROMs Microprocessor—System Components

S

Sample/Hold Circuits	Linear—Other Devices
SCR/Triac Control	Linear—Other Devices

Function	Section
Schmitt Trigger	Digital—CMOS, Miscellaneous Digital—HNIL/HTL, Miscellaneous Digital—TTL, Miscellaneous Digital—Special
SDLC Protocol Controller	Interface—Transmitter-Receivers Microprocessor—System Components; 8048, 8080, 8085
Security Systems Detector	Linear—Consumer Circuits
Sense Amplifiers	Interface—Sense Amplifiers
Sequence Controller	Microprocessor—System Components; General Purpose
Sequential Machine	Memory—PLAs
Serial Analog Delay	Linear—Other Devices
Serial/Parallel Register	Digital—TTL, Arithmetic Functions
Serial to Parallel Converter	Digital—Special
Serial Receiver	Interface—Serial Transmitters-Receivers
Serial Transmitter	Interface—Serial Transmitters-Receivers
Serial Data Controller	Microprocessor—System Components PPS-4, Z80
Servo Amplifier	Linear—Other Devices
Servo Controller	Linear—Other Devices
Servo Driver	Linear—Consumer Circuits
Shift Registers	
Analog	Linear—Other Devices
Digital	Digital—CMOS, Shift Registers Digital—ECL 10000, Shift Registers Digital—ECL 100K, Shift Registers Digital—ECL III, Shift Registers Digital—HNIL/HTL, Shift Registers Digital—TTL, Shift Registers Digital—Special Memory—Shift Registers, Dynamic Memory—Shift Registers, Static
Shifter	Digital—TTL, Miscellaneous
Shift Matrix	Digital—ECL100K, Shift Register
Signal Processor	Linear—Miscellaneous
Smoke Detector	Linear—Consumer Circuits
Sonar Transceiver	Linear—Consumer Circuits Linear—Other Devices
Sound Generator	Linear—Consumer Circuits
Speech Filter	Linear—Telecommunication Circuits
Speech Synthesis Processor	Linear—Consumer Circuits
SPDT Switches	Interface—Analog Switches
SPST Switches	Interface—Analog Switches
SSB Detector	Linear—Consumer Circuits
Standard Cells	Custom/Semicustom, Standard Cells
Static Memory Interface	Microprocessor—System Components; F8
Status and Shift Control Unit	Microprocessor—System Components; 2900
Stepping Motor Driver	Linear—Other Devices
Stopwatch Circuits	Linear—Consumer Circuits
Subtractor	*See Arithmetic Functions*
Subscriber Line Interface Circuit	Linear—Telecommunications Circuits
Successive Approximation Register	Digital—CMOS, Miscellaneous Digital—TTL, Miscellaneous
Switches	Linear—Consumer Circuits
Analog	Interface—Analog Switches, Switches With Drivers Interface—Analog Switches, Switches Without Drivers
Crosspoint	Interface—Analog Switches, Multiplexers
Drivers	Interface—Analog Switches, Drivers
Frequency	Linear—Other Circuits
Touch Sensing	Linear—Consumer Circuits
Switching Regulators	Linear—Voltage Regulators, Switching Regulators
Synchronous Communications Controller	Microprocessor—System Components
Synchronous Data Link Controller	Interface—Transmitters-Receivers *Also See SDLC Protocol Controller*
Synchronous Receiver/ Transmitter	Interface—Transmitters-Receivers
Synchronous Serial Data Adapter	Microprocessor—System Components; 6800, General Purpose
Synthesizer	Linear—Phase Locked Loop Circuits
System Controller and Bus Driver	Microprocessor—System Components; 8080

T

Function	Section
Tachometer Circuit	Linear—Consumer Circuits
Tape Recorder Control Circuits	Linear—Consumer Circuits
Tele-communications Data Interface	Microprocessor—System Components; PPS-4
Telephone Circuits	Linear—Telecommunication Circuits
Telephone Restricter	Linear—Telecommunication Circuits
Telephone Signal Processing Peripheral	Linear—Telecommunication Circuits
Teletex Circuits	Linear—Telecommunication Circuits
Temperature Controlled Differential Pair	Linear—Other Devices
Temperature Transducers	Linear—Other Devices
Thermal Converter	Linear—Other Devices
Thermal Printhead Driver	Interface—Memory and Peripheral Drivers
Thermometer	Linear—Consumer Circuits Linear—Other Devices
Threshold Switch	Linear—Other Devices
Time Slot Assigner	Digital—CMOS, Miscellaneous

© IC MASTER 1984

Function	Section
Timers	Digital—CMOS, Miscellaneous Linear—Consumer Circuits Linear—Timers Microprocessor—System Components; 6800
Timing Controller	Microprocessor—General Purpose
Timing Function	Microprocessor—System Components; 10800
Tone Decoder	Linear—Phase Locked Loop Circuits
Tone Encoder	*See Encoders*
Tone Generator	Linear—Phase Locked Loop Circuits
Tone Receiver	Linear—Telecommunication Circuits
Tone Ringer	Linear—Telecommunication Circuits
Tone Transmitter	Linear—Telecommunication Circuits
Top Octave Generator	Linear—Consumer Circuits
Tone Squelch System	Linear—Consumer Circuits
Track and Hold	Linear—Other Devices
Traffic Decoder	Linear—Other Devices
Traffic Information Control	Linear—Other Devices
Transceiver	Digital—CMOS, Miscellaneous Digital—TTL, Transceiver, Bus Interface—Transmitters-Receivers Interface—Line Circuits
Translators	Digital—CMOS, Translators Digital—ECL 10000, Translators Digital—ECL 95000, Translators Digital—HNIL/HTL, Translators Digital—TTL, Translators Interface—Memory and Peripheral Drivers Microprocessor—System Components
Transmitter/ Receiver	Linear—Telecommunication Circuits
Transputer	Microprocessor—System Components; Transputer
Transversal Filters	Linear—Other Devices
True/Complement, Zero/One Element	Digital—TTL, Miscellaneous
Tuner Control, AM/FM	Linear—Consumer Circuits
Tuning Voltage Stabilizer	Linear—Consumer Circuits
Two Modulus Prescaler	Digital—Special Linear—Phase Locked Loop Circuits
Two-Wire to Four-Wire Converter	Linear—Telecommunications Circuits
TV Circuits	Linear—Consumer Circuits

U

Function	Section
Universal Communications Interface	Interface—Transmitters-Receivers
Universal Peripheral Interface	Microprocessor—System Components; 8048, 8080, 8085
UART	Interface—Transmitters-Receivers Microprocessor—System Components; 1800, NSC800
USART	Interface—Transmitters-Receivers
USRT	Interface—Transmitters-Receivers
USYNRT	Interface—Transmitters-Receivers

V

Function	Section
VCO	*See Voltage Controlled Oscillator*
Victor Dot Matrix Printer Controller	Microprocessor—System Components; PPS-4
Video Digital Converter	Interface—Digital to Analog Converters
Video Display Controller	Microprocessor—System Components; 1800, Peripheral Controllers
Video Display Controller/ Interface	Linear—Consumer Crcuits Microprocessor—System Components; 1800, 6800
Video Games	Linear—Consumer Circuits
Video Tape Recorder	Linear—Consumer Circuits
Video Timer/Controller	Micrprocessor—System Components; 9900
Voltage Comparator	Digital—TTL, Miscellaneous
Voltage Controlled Oscillators	Digital—ECL III, Miscellaneous Digital—TTL, Miscellaneous Linear—Consumer Circuits Linear—Other Devices Linear—Phase Lock Loop Circuits
Voltage Controlled Transient Generator	Linear—Consumer Circuits
Voltage Detector	Linear—Other Devices
Voltage Level Monitor	Linear—Other Devices
Voltage References	Linear—Other Devices Linear—Voltage References
Voltage Regulators	Linear—Voltage Regulators, Fixed Positive Fixed Negative Fixed Dual Adjustable Positive Adjustable Negative Adjustable Dual Switching
Automotive	Linear—Consumer Circuits
VTR	*See Video Tape Recorder*

W/Z

Function	Section
Wallace Tree	Digital—ECL Digital—TTL, Arithmetic Functions
Watch Circuits	Digital—CMOS, Oscillators/Dividers Linear—Consumer Circuits
Window Discriminator	Linear—Other Devices
Zero Voltage and Zero Crossing Triggers	Linear—Other Devices

PART NUMBER INDEX

This index shows the page and line on that page where each device appears in the Master Selection Guide. The devices are arranged in order by basic numbers so that similarly numbered devices from different manufacturers are grouped together. Basic numbers for microcomputer boards and microprocessor development systems are also included. BOLD FACED listings lead to manufacturers' supplied data sheets. Use this index to locate key operational characteristics, application notes, and device data whenever you have a device number. This is an index of all parts with identical basic part numbers, regardless of their function. It is not an Alternate Source Directory.

HOW TO USE THE PART NUMBER INDEX

This Part Number Index is arranged in alphanumeric sequence, ignoring the manufacturers' prefixes and suffixes and using the basic part numbers. This basic number sequence is sorted by reading the digits from **left** to **right,** assuming that letters come after numbers. (As an example, these numbers would appear in the following order: 5301, 531, 54139, 54LS01, 555.) Under each basic number, manufacturers' names and full part numbers are listed. The page references in **BOLD FACE** lead to manufacturers' data and application notes. Short editorial descriptions of all Active Applications Notes available from every manufacturer are indicated by a ¶ sign.

The arrangement of this index by base number gives you several advantages. It allows you to find a device by its basic number whether or not you know the name of the manufacturer or the manufacturer's prefixes. Also it groups similar devices together so that when you are looking for data you can quickly determine if the data has been provided in the book by any of the manufacturers and where that data is. Similarly it groups any references to application notes close together so that you do not need to guess which manufacturer might publish application notes on a device before you can locate them.

Once you become familiar with the alphanumeric numbering sequence, you'll find that this index is easy to use.

© IC MASTER 1984

Base Number	Source	Device	Page-Line
ALPHAMAP			
	Alphatron	ALPHAMAP	4476-1
			4476-2
AMS-DB			
	Western	AMS-DB	1967-19
AMSSeries			
	Siemens	AMSSeries	1963-13
BHC	**Barvon**	**BHC**	★4626
			4476-17
BHC Library			
	Barvon	BHC Library	4476-9
BHN Library			
	Barvon	BHN Library	4476-10
CCL	**Signetics**	**CCL**	★4855
CELLMOS			
	CirTech	CELLMOS	4476-11
			4476-12
			4476-13
			4476-14
			4476-15
CHMOS-1 Library			
	Intel	CHMOS-1 Library	4477-8
CIPMF	OhioSci	CIPMF	1959-1
CLIC-A	CalDevices	CLIC-A	4473-7
CLIC-B	CalDevices	CLIC-B	4473-12
CLIC-C	CalDevices	CLIC-C	4473-5
CLIC-D	CalDevices	CLIC-D	4473-6
CLIC-E	CalDevices	CLIC-E	4473-9
CLIC-F	CalDevices	CLIC-F	4473-10
CLIC-G	CalDevices	CLIC-G	4473-13
CLIC-H	CalDevices	CLIC-H	4473-11
CLIC-I	CalDevices	CLIC-I	4473-8
CLIC-L	CalDevices	CLIC-L	4473-14
CMOS	Mostek	CMOS	4476-16
	Plessey	**CMOS**	★4821
			4478-7
			4478-8
			4478-9
	Signetics	**CMOS**	★ 896
			★ 897
CMOS Library			
	AMI	**CMOS Library**	★4624
			4476-3
			4476-4
			4476-5
	ArrayTech	CMOS Library	4476-7
	CMA	CMOS Library	4476-19
	Fairchild	CMOS Library	4476-21
	Fujitsu	CMOS Library	4476-22
	IntCirSys	CMOS Library	4477-3
			4477-4
			4477-5
	IntMicCir	**CMOS Library**	★4747
			4477-10
	Intersil	CMOS Library	4477-9
	MicroTech	CMOS Library	4477-20
	Mostek	CMOS Library	4477-21
	SiliconSys	CMOS Library	4478-21
	TI	**CMOS Library**	★4882
			4886
			4478-25
	VTI	**CMOS Library**	★4931
			4478-26
CMI	**Cromemco**	**CMI**	★2020
CSP	**Cromemco**	**CSP**	★2022
CTI	**Cromemco**	**CTI**	★2033
DAC-HFBMC			
	Datel	DAC-HFBMC	2640-11
DACHK	**MicroNet**	**DACHK**	★3044
			2652-16
DPU	**Cromemco**	**DPU**	★2008
			1965-41
DatatapTM			
	Oliver	DatatapTM	4355-7
Digitalker			
	National	Digitalker	1351-149
			1355-47
EASE	**OKI**	**EASE**	★4118
EM-SERIES			
	AppMicroSys	EM-SERIES	1809-9
ES-SERIES			
	AppMicroSys	ES-SERIES	1809-10
EXORciser			
	Motorola	**EXORciser**	★1923
EXORciserII			
	Motorola	EXORciserII	1815-3
EXORmacs			
	Motorola	**EXORmacs**	★1915
EZ-PRO	AMA	EZ-PRO	1809-7
EZ-PROII			
	AMA	**EZ-PROII**	★1902
			1809-8
EiCOMPuMOS			
	DiversTech	EiCOMPuMOS	1811-7
FACT	**Fairchild**	**FACT**	★ 766
FAIRCAD			
	Fairchild	**FAIRCAD**	★4635
FAST	**Signetics**	**FAST**	★ 891-894
FFP	**Cromemco**	**FFP**	★2011
FLEXX Array			
	Signetics	**FLEXX Array**	★4832
Formulator Mark III			
	Fairchild	Formulator Mark III	1811-12
GPIB	**Cromemco**	**GPIB**	★2031
Gangbuster			
	Onset	Gangbuster	4355-11
General Reference			
	RCA	**General Reference**	★1590
General reference			
	Datel	**General reference**	★2855
HCA-Library			
	Harris	**HCA-Library**	★4743
HCA-SSI/MSI			
	Harris	**HCA-SSI/MSI**	★4742
HCMOS Library			
	Hughes	HCMOS Library	4477-2
	Synertek	**HCMOS Library**	★4874
			4478-24
HMOS Library			
	VTI	**HMOS Library**	★4931
			4478-27
INTER	Signetics	INTER	4478-19
IOP	**Cromemco**	**IOP**	★2018
ISL	**Signetics**	**ISL**	★4855
			4478-18
ISO-CMOS Library			
	GTEMicro	ISO-CMOS Library	4476-23
			4476-24
			4476-25
IceboxA			
	RELMS	IceboxA	1815-20
IceboxT	RELMS	IceboxT	1817-1
Impel Library			
	IMP	**Impel Library**	★4749
			4477-11
			4477-12
			4477-13
IntellecIII			
	Intech	IntellecIII	1813-8
InterceptJr			
	Intersil	InterceptJr	1965-10
Interchip A			
	Intech	Interchip A	4469-51
Interchip B			
	Intech	Interchip B	4469-52
Interchip C			
	Intech	Interchip C	4469-53
Interchip D			
	Intech	Interchip D	4469-54
Interchip E			
	Intech	Interchip E	4470-1
Interchip F			
	Intech	Interchip F	4469-55
KDS	Kontron	KDS	1813-14
LDSI	**LSILogic**	**LDSI**	★4762
MALV Series			
	MasterLogic	MALV Series	4477-14
MASG Series			
	MasterLogic	MASG Series	4477-15
MCA	**Interdesign**	**MCA**	★4746
			4469-44
MCA-series			
	Motorola	MCA-series	3237-114
MCB	**Interdesign**	**MCB**	★4746
			4469-45
MCC	**Interdesign**	**MCC**	★4746
			4469-46
MCD	**Interdesign**	**MCD**	★4746
			4469-48
MCE	**Interdesign**	**MCE**	★4746
			4469-47
MCF	**Interdesign**	**MCF**	★4746
			4469-49
MCG	**Interdesign**	**MCG**	★4746
			4469-50
MCS	Bedford	MCS	1961-28
MCU	**Cromemco**	**MCU**	★2015
MDE	DEC	MDE	1811-4
MEDM	Technitrol	MEDM	1353-64
			1354-14
MLA	**Interdesign**	**MLA**	★4746
			4474-38
MLZ-DAQ			
	Heurikon	MLZ-DAQ	1955-21
MLZ-VDC			
	Heurikon	MLZ-VDC	1957-9
MM1-MSC			
	ContLogic	MM1-MSC	1955-18
MOA	**Interdesign**	**MOA**	★4746
			4474-23
MOB	**Interdesign**	**MOB**	★4746
			4474-29
MOC	**Interdesign**	**MOC**	★4746
			4474-21
MOD	**Interdesign**	**MOD**	★4746
			4474-22
MOE	**Interdesign**	**MOE**	★4746
			4474-25
MOF	**Interdesign**	**MOF**	★4746
			4474-31
MOG	**Interdesign**	**MOG**	★4746
			4474-28
MOH	**Interdesign**	**MOH**	★4746
			4474-27
MOJ	**Interdesign**	**MOJ**	★4746
			4474-24
MOL	**Interdesign**	**MOL**	★4746
			4474-30
MOLE	**National**	**MOLE**	★1926
			1815-8
MOM	**Interdesign**	**MOM**	★4746
			4474-33
MON	**Interdesign**	**MON**	★4746
			4474-34
MOP	**Interdesign**	**MOP**	★4746
			4474-32
MOQ	**Interdesign**	**MOQ**	★4746
			4474-26
MPA	**Interdesign**	**MPA**	★4746
			4467-37
MPB	**Interdesign**	**MPB**	★4746
			4467-38
MPC	**Interdesign**	**MPC**	★4746
			4467-39
MPD	**Interdesign**	**MPD**	★4746
			★4747
			4467-40
MPE	Interdesign	MPE	4467-36
MSA	**Interdesign**	**MSA**	★4746
MSB	**Interdesign**	**MSB**	★4746
MSC	**Interdesign**	**MSC**	★4746
MSII	STC	MSII	4475-29
MUA	**Interdesign**	**MUA**	★4746
			4474-35
MUB	**Interdesign**	**MUB**	★4746
			4474-36
MUC	**Interdesign**	**MUC**	★4746
			4474-37
MVMEBUG			
	Motorola	**MVMEBUG**	★2041
Macrologic Bipolar			
	Fairchild	Macrologic Bipolar	1257-7
Macrologic CMOS			
	Fairchild	Macrologic CMOS	1257-8
MicroNOVA			
	DataGen	MicroNOVA	1352-32
NDS-I	Intech	NDS-I	1813-9
NDS-II	Intech	NDS-II	1813-10
NMOS Library			
	AMI	NMOS Library	4476-6
	ArrayTech	NMOS Library	4476-8
	IntCirSys	NMOS Library	4477-6
			4477-7
	MicroTech	NMOS Library	4477-19
Nitrochip			
	Nitron	Nitrochip	4478-5
			4478-6
OCTART			
	Cromemco	**OCTART**	★2016
Occam	**Inmos**	**Occam**	★1913
			1349-27
			1352-16
			1352-38
PRI	**Cromemco**	**PRI**	★2032
QUADART			
	Cromemco	**QUADART**	★2019
SAJI-IV	**Harris**	**SAJI-IV**	★4744
			4477-1
SCC	**Cromemco**	**SCC**	★2010
			1955-36
SDD	**Cromemco**	**SDD**	★2036
SDI	**Cromemco**	**SDI**	★2034
SHM-HUMC			
	Datel	**SHM-HUMC**	★2861
			3238-4
SHM-HUMM			
	Datel	SHM-HUMM	3238-5
SIMPALINK			
	StrucDes	SIMPALINK	4357-3
SMDI	**Cromemco**	**SMDI**	★2017
SMPSeries			
	Siemens	SMPSeries	1963-22
SPHERE			
	Infosphere	SPHERE	1813-6
SPICE	RELMS	SPICE	1817-2
ST-LSI	**Datel**	**ST-LSI**	★2039
STARPLEX			
	National	STARPLEX	1815-9
STARPLEXII			
	National	STARPLEXII	1815-10
SuperboardII			
	OhioSci	SuperboardII	1959-2
System One			
	Cromemco	System One	1809-18
TU-ART			
	Cromemco	**TU-ART**	★2030
Transputer			
	Inmos	Transputer	1352-78
ULA Series			
	MCE	ULA Series	4477-18
UniCELL			
	MCE	UniCELL	4477-16
UniCELL MGA			
	MCE	UniCELL MGA	4477-17
VERSAdos			
	Motorola	**VERSAdos**	★1917
VERSAmodule			
	Motorola	VERSAmodule	1967-5
WDI-II	**Cromemco**	**WDI-II**	★2026
XDS	**TI**	**XDS**	★1931
XR-CMA			
	Exar	**XR-CMA**	★3387
XR-CMB			
	Exar	**XR-CMB**	★3387
XR-CMC			
	Exar	**XR-CMC**	★3387

¶ Indicates page number in Application Note Directory.
★ Indicates addition data is provided on the page noted.

Base Number	Source	Device	Page-Line
XR-CMD			
	Exar	**XR-CMD**	★3387
XRCMA	Exar	XRCMA	4470-2
XRCMB	Exar	XRCMB	4470-3
XRCMC	Exar	XRCMC	4470-4
XRCMD	Exar	XRCMD	4470-5
XRCSD	Exar	XRCSD	4467-8
ZPU	**Cromemco**	**ZPU**	★2009
			1955-19
Zodiac	SGS	Zodiac	4478-15
iPDS	Intech	iPDS	1813-12
0	ITT	ZSY0	3216-43
00	**Wintek**	**CAS00**	★2062
		CCC00	★2062
		CFM00	★2062
		CFP00	★2062
		CLL00	★2062
		CPL00	★2062
		MCS00	★2062
		MGP00	★2062
		MPB00	★2062
		RDA00	★2062
		RDC00	★2062
		RDL00	★2062
		RDU00	★2062
		SVC00	★2062
000	GI	SPR000	3169-89
0002	National	LH0002	3155-15
			¶ 292-6
		LH0002C	3155-16
			¶ 292-6
0003	National	LH0003	3175-105
			3193-29
		LH0003C	3193-30
0004	National	LH0004	3176-127
			3188-45
		LH0004C	3176-41
			3176-128
			3189-9
0005	National	LH0005	3176-15
			3201-15
		LH0005A	3176-16
			3193-15
		LH0005C	3176-20
			3201-16
0006	National	DH0006	2683-124
		DH0006C	2683-125
0007	National	MH0007	2680-92
			¶ 288-15
		MH0007C	2680-93
			¶ 288-15
0008	National	DH0008	2683-126
	OEI	AH0008	3202-59
0009	National	MH0009	2681-51
			¶ 288-15
		MH0009C	2681-52
			¶ 288-15
001	RCA	GP001AD	1337-80
	Solitron	CJCA001	3229-55
		CJSE001	3224-91
0010	**AD**	**HTS-0010**	★2842
			★2847
			3238-156
	OEI	AH0010C	3174-45
		AH0010F	3174-46
0011	National	DH0011	2683-127
0012	National	MH0012	2680-94
			¶ 288-15
		MH0012C	2680-95
			¶ 288-15
0013	National	MH0013	2681-53
			¶ 288-15
		MH0013C	2681-54
			¶ 288-15
	OEI	AH0013CA	3156-24
		AH0013CB	3156-25
		AH0013MA	3156-26
0014	National	AH0014	2621-8
		AH0014C	2621-9
0015	National	AH0015	2616-85
		AH0015C	2616-86
0017	National	DH0017C	2683-128
00171	Hitachi	HD00171	599-94
0018	National	DH0018C	2683-129
0019	National	AH0019	2619-107
		AH0019C	2619-108

Base Number	Source	Device	Page-Line
002	Solitron	CJCA002	3229-126
		CJSE002	3227-75
	TI	**TAL002**	★4887
			4465-52
0020	**Fairchild**	**FGE0020**	★4634
			4460-11
	National	LH0020	3176-17
			3192-5
		LH0020C	3176-18
			3199-6
0021	National	LH0021	3175-76
			3193-25
		LH0021C	3175-85
			3199-11
0022	National	LH0022	3193-33
			¶ 295-7
		LH0022C	3197-48
			¶ 295-7
			¶ 295-7
0023	National	LH0023	3238-45
		LH0023C	3238-46
0024	National	LH0024	3176-71
			3180-132
			3194-10
		LH0024C	3176-83
			3180-133
			3200-20
0025	**AD**	**HTS-0025**	★2847
			3237-172
	National	DS0025	2681-45
			¶ 319-3
		DS0025C	2681-46
			¶ 319-3
0026	Fairchild	0026	2681-43
	Motorola	MMH0026C	2681-44
	National	DS0026	2681-47
			¶ 319-3
		DS0026C	2681-48
			¶ 319-3
0028	National	DH0028C	2680-61
003	MCE	MT003	592-68
	Solitron	CJSE003	3224-92
0030	Sanyo	STK0030	3165-29
0032	**AD**	**ADLH0032**	★3353
			3176-66
			3180-130
			3195-12
		ADLH0032C	★3353
			3176-67
			3180-131
			3202-22
	National	LH0032	3176-72
			3180-128
			3195-11
		LH0032C	3176-73
			3180-129
			3202-21
	TeledyneP	TP0032	3195-10
0033	**AD**	**ADLH0033**	★3353
			3174-2
			3176-55
		ADLH0033C	★3353
			3174-6
			3176-57
	National	LH0033	3174-3
		LH0033C	3174-7
	TeledyneP	TP0033	3174-8
		TP0033-80	3174-4
0034	National	DH0034	636-123
		DH0034C	636-124
0035	National	DH0035	641-100
			¶ 291-13
			3235-127
		DH0035C	641-101
			¶ 291-13
			3235-128
0036	National	LH0036	3155-78
		LH0036C	3155-79
0037	National	LH0037	3155-80
		LH0037C	3155-81
0038	National	LH0038	3155-82
		LH0038C	3155-83
004	Solitron	CJSE004	3227-76
	TI	**TAL004**	★4887
			4465-53
		TAT004	★538
			(Continued)

Base Number	Source	Device	Page-Line
004	**TI**	**TAT004**	★4894
			4463-12
0040	Sanyo	STK0040	3165-30
00401	DDC	ADC00401	2630-29
0041	National	LH0041	3175-93
			3193-23
		LH0041C	3175-94
			3199-1
0042	AD	AD0042C	3202-53
	Intersil	LH0042	3202-51
		LH0042C	3202-54
	National	LH0042	3202-52
		LH0042C	3202-55
			¶ 295-7
0043	National	LH0043	3238-47
		LH0043C	3238-48
0044	National	LH0044	3182-17
		LH0044A	3181-34
		LH0044AC	3181-35
		LH0044B	3182-16
		LH0044C	3183-9
0045	National	LH0045	3156-146
		LH0045C	3156-147
005	Solitron	CJSE005	3224-93
0050	Sanyo	STK0050	3165-31
0052	National	LH0052	3185-18
			¶ 295-7
		LH0052C	3187-42
			¶ 295-7
			¶ 295-7
0053	National	LH0053	3238-49
		LH0053C	3238-50
0055	Sanyo	STK0055	3165-32
0056	National	DS0056	2681-49
		DS0056C	2681-50
0059	Sanyo	STK0059	3165-33
006	MCE	MT006	592-78
	Solitron	CJSE006	3227-77
0060	Sanyo	STK0060	3165-34
00600	**Harris**	**HGA-C00600**	★4740
			4462-19
			4463-9
0061	National	LH0061	3175-87
			3193-54
		LH0061C	3175-88
			3201-42
0062	National	LH0062	3194-29
		LH0062C	3202-18
0063	National	LH0063	3174-9
		LH0063C	3174-10
0069	National	DH0069	2683-110
007	Solitron	CJCA007	3229-56
0070	National	LH0070	3237-79
	Sanyo	STK0070	3165-35
0071	National	LH0071	3237-98
		LH0071-0	3237-99
		LH0071-1	3237-100
		LH0071-2	3237-101
0075	National	LH0075	3223-33
			3228-34
		LH0075C	3228-35
0076	National	LH0076	3229-71
		LH0076C	3229-72
008	Solitron	CJCA008	3229-127
	TI	**TAT008**	★538
			★4894
			4463-13
	TRW-LSI	**MPY008A**	★1164
			604-162
			604-163
		MPY008H	★1164
			604-164
			604-165
0080	Sanyo	STK0080	3165-36
	Sharp	LH0080	1348-53
0082	GI	ER0082	3758-24
			¶ 318-2
	National	LH0082	3155-41
		LH0082C	3155-42
0084	National	LH0084	3155-93
		LH0084C	3155-94
	Thomson CSF		
		TDB0084	3213-44
		TDC0084	3212-24
0086	National	LH0086	3155-95
		LH0086C	3155-96

Base Number	Source	Device	Page-Line
009	Solitron	CJSE009	3225-56
0091	National	LH0091	3237-156
			¶ 308-14
		LH0091C	3237-157
			¶ 308-14
0094	National	LH0094	3235-22
		LH0094C	3235-23
01	Apex	PA01	3175-70
			3201-52
	HybridSys	HSREF01	3237-52
	MicroPwr	DAC-01	2638-9
		DAC-01B	2638-10
		DAC-01C	2638-11
		DAC-01D	2638-12
		DAC-01F	2638-13
		DAC-01H	2638-14
	MicroPwr	**MPREF-01**	★3529
			3237-69
		OP-01A	★3529
			3187-21
		OP-01C	★3529
			3196-13
		OP-01E	★3529
			3191-2
		OP-01F	★3529
			3191-3
		OP-01G	★3529
			3196-14
		OP-01H	★3529
			3187-22
	Motorola	MCH-01	3755-25
	PMI	**AMP-01**	★3568
			3155-59
			3176-13
			3181-13
	PMI	CMP-01	3159-14
			¶ 279-8
			¶ 279-9
		CMP-01B	3159-15
			¶ 279-8
			¶ 279-9
		CMP-01C	3159-31
			¶ 279-8
			¶ 279-9
		CMP-01E	3159-16
			¶ 279-8
			¶ 279-9
	PMI	**DAC-01**	★3567
			2638-21
			¶ 283-3
		DAC-01A	★3567
			2638-8
			¶ 283-3
		DAC-01B	★3567
			2638-22
			¶ 283-3
		DAC-01C	★3567
			2638-23
			¶ 283-3
		DAC-01D	★3567
			2638-32
			¶ 283-3
		DAC-01F	★3567
			2638-24
			¶ 283-3
		DAC-01H	★3567
			2638-25
			¶ 283-3
	PMI	GAP-01A	3232-60
		GAP-01B	3232-61
		GAP-01E	3232-62
		GAP-01F	3232-63
		MAT-01	3157-51
			¶ 307-11
		MAT-01A	3157-52
			¶ 307-11
		MAT-01F	3157-53
			¶ 307-11
		MAT-01G	3157-54
			¶ 307-11
		MAT-01H	3157-55
			¶ 307-11
	PMI	**OP-01C**	★3566
			3196-15
		OP-01E	★3566
			3191-4
			(Continued)

Arranged alphanumerically from left to right.

© IC MASTER 1984

Base Number	Source	Device	Page-Line
01	**PMI**	**OP-01F**	★3566
			3191-5
		OP-01G	★3566
			3196-16
		OP-01H	★3566
			3187-23
	PMI	PKD-01	3235-126
		REF-01	3237-83
			¶ 279-5
		REF-01A	3237-84
			¶ 279-5
		REF-01C	3237-85
			¶ 279-5
		REF-01D	3237-86
			¶ 279-5
		REF-01E	3237-87
			¶ 279-5
		REF-01H	3237-88
			¶ 279-5
		SW01B	2616-68
		SW01F	2616-69
	Raytheon	**REF-01**	★3584
			3237-91
		REF-01A	★3584
			3237-92
		REF-01C	★3584
			3237-93
		REF-01D	★3584
			3237-94
		REF-01E	★3584
			3237-95
		REF-01H	★3584
			3237-96
	SiliconSys	**SSISC-01**	★3685
	Supertex	VC01	2683-27
		VF01	2680-124
	TI	**PDOS01**	★2055
	Votrax	SC-01	3169-100
	Wintek	**RDA01**	★2062
010	Solitron	CJSE010	3227-107
	TI	TAT010	4461-19
			4461-20
		TL010	3232-116
0101	National	LH0101	3175-71
			3201-4
		LH0101A	3175-72
			3192-53
		LH0101AC	3175-73
			3192-54
		LH0101C	3175-74
			3201-5
0104	Harris	HM0104	641-109
0107	Hughes	HCTR0107	640-32
011	Solitron	CJSE011	3225-57
0117	TI	TMS0117NLP	1339-15
	Thomson-CSF		
		TDC0117	3229-1
0119	Thomson-CSF		
		TDC0119	3161-25
012	Solitron	CJSE012	3227-108
	TRW-LSI	**MPY012A**	★1164
			604-142
			604-143
		MPY012H	★1164
			604-129
			604-130
	TRW-LSI	MPY012K	604-131
			604-132
01200	Harris	HGA-C01200	4462-20
			4463-10
0124	Thomson-CSF		
		TDB0124	3180-46
		TDB0124A	3210-52
		TDC0124	3211-39
0126	National	AH0126	2620-70
		AH0126C	2620-71
0129	National	AH0129	2620-42
		AH0129C	2620-43
013	Solitron	CJSE013	3225-58
0131	Thomson-CSF		
		TDB0131	3239-47
0133	National	AH0133	2615-121
		AH0133C	2615-122
0134	National	AH0134	2616-30
		AH0134C	2616-31
	Thomson-CSF		
		TDC0134	3238-149
0135	Thomson-CSF		
		TDC0135	3238-150
0136	Thomson-CSF		
		TDB0136	3236-127
		TDC0136	3236-128
0137	Thomson-CSF		
		TDC0137	3229-2
0139	National	AH0139	2620-112
		AH0139C	2620-113
	Thomson-CSF		
		TDC0139	3162-62
014	Solitron	CJSE014	3227-109
0140	National	AH0140	2620-21
		AH0140C	2620-22
0141	National	AH0141	2615-92
		AH0141C	2615-93
0142	National	AH0142	2621-1
		AH0142C	2621-2
0143	National	AH0143	2618-67
		AH0143C	2618-68
0144	National	AH0144	2618-37
		AH0144C	2618-38
0145	National	AH0145	2620-99
		AH0145C	2620-100
0146	National	AH0146	2618-16
		AH0146C	2618-17
	Thomson-CSF		
		TDB0146	3212-42
		TDC0146	3211-28
0148	Thomson-CSF		
		TDB0148	3212-25
		TDC0148	3211-29
0149	Thomson-CSF		
		TDB0149	3212-26
		TDC0149	3211-30
0150	Sanyo	STK0150	3165-37
01500	**Harris**	**HGA-B01500**	★4741
	Harris	HGABA01500	4460-37
0151	National	AH0151	2615-100
		AH0151C	2615-101
0152	National	AH0152	2616-7
		AH0152C	2616-8
0153	National	AH0153	2620-25
		AH0153C	2620-26
0154	National	AH0154	2620-55
		AH0154C	2620-56
0155	Thomson-CSF		
		TDC0155	3194-45
		TDC0155A	3189-23
0156	Thomson-CSF		
		TDC0156	3194-46
		TDC0156A	3189-24
0157	Thomson-CSF		
		TDC0157	3194-44
		TDC0157A	3189-25
0158	Thomson-CSF		
		TDB0158	3209-11
		TDC0158	3207-17
0159	Thomson-CSF		
		TDA0159	3173-120
016	**TRW-LSI**	**MPY016A**	★1164
			604-146
			604-147
		MPY016H	★1164
			604-134
			604-135
		MPY016K	★1164
			★1165
			604-136
			604-137
0161	National	AH0161	2618-20
		AH0161C	2618-21
	Thomson-CSF		
		TDA0161	3173-121
0162	National	AH0162	2618-50
		AH0162C	2618-51
	Thomson-CSF		
		TDA0162	3173-122
0163	National	AH0163	2620-103
		AH0163C	2620-104
0164	National	AH0164	2620-117
		AH0164C	2620-118
0165	**Harris**	**HD0165**	★2979
			2667-4
			¶ 289-9
0168	Harris	HM0168	641-105
017	Solitron	CJSE017	3222-69
018	Solitron	CJSE018	3226-82
0186	Harris	HM0186	641-106
019	Solitron	CJSE019	3222-70
0193	Thomson-CSF		
		TDC0193	3161-35
0198	Harris	HM0198	641-107
01A2	Synertek	MBC01A2	1959-22
		MBC01A2-1	1959-23
02	**MicroPwr**	**MPREF-02**	★3529
			3236-141
	MicroPwr	MPREF-02A	3236-142
		MPREF-02C	3236-143
		MPREF-02D	3236-144
		MPREF-02F	3236-145
		MPREF-02H	3236-146
	MicroPwr	**OP-02**	★3529
			3191-7
		OP-02A	★3529
			3186-63
		OP-02B	★3529
			3196-20
		OP-02C	★3529
			3191-8
		OP-02D	★3529
			3196-21
		OP-02E	★3529
			3186-64
	PMI	CMP-02	3159-11
			¶ 315-13
		CMP-02B	3159-12
			¶ 315-13
		CMP-02C	3159-30
			¶ 315-13
		CMP-02E	3159-13
			¶ 315-13
	PMI	**DAC-02AC**	★3567
			2647-27
		DAC-02BC	★3567
			2647-28
		DAC-02CC	★3567
			2647-30
		DAC-02DD	★3567
			2647-36
		MAT-02A	★3569
			3157-73
		MAT-02B	★3569
			3157-74
		MAT-02E	★3569
			3157-75
		MAT-02F	★3569
			3157-76
		OP-02	★3566
			3175-32
			3191-9
		OP-02A	★3566
			3187-1
		OP-02B	★3566
			3196-22
		OP-02C	★3566
			3191-10
		OP-02D	★3566
			3196-23
		OP-02E	★3566
			3187-2
	PMI	REF-02	3236-162
			3238-142
			¶ 315-13
			¶ 315-16
		REF-02A	3236-163
			3238-143
			¶ 315-13
			¶ 315-16
		REF-02C	3236-164
			3238-144
			¶ 315-13
			¶ 315-16
		REF-02D	3236-165
			3238-145
			¶ 315-13
			¶ 315-16
		REF-02E	3236-166
			(Continued)
02	PMI	REF-02E	3238-146
			¶ 315-13
			¶ 315-16
		REF-02H	3236-167
			3238-147
			¶ 315-13
			¶ 315-16
		SW02B	2616-70
		SW02F	2616-71
	Raytheon	**REF-02**	★3585
			3236-170
		REF-02A	★3585
			3236-171
		REF-02C	★3585
			3236-172
		REF-02D	★3585
			3236-173
		REF-02E	★3585
			3236-174
		REF-02H	★3585
			3236-175
	Supertex	VC02	2683-28
		VF02	2680-125
	TI	**PDOS02**	★2055
020	Solitron	CJSE020	3226-83
	Synertek	MBC020-65	1959-8
		MBC020-68	1959-18
	TI	TAC020	4466-34
		TAT020	4461-21
			4461-22
0200	**Citel**	**MA0200**	★4628
			4461-42
	Hughes	HCTR0200	576-138
	Matra	MA0200	4461-43
0203	TI	TIB0203S	3791-105
021	Solitron	CJSE021	3222-71
022	TI	TL022C	3207-19
		TL022M	3207-6
0246	Telefunken	TDD0246	3155-137
025	Ferranti	ZNREF025	3236-129
	SGS	LS025	3232-84
0250	GI	SP-0250	3169-90
02500	**Harris**	**HGA-B02500**	★4741
	Harris	HGA-C02500	4462-21
			4463-11
0256	GI	SP0256	3169-91
0258	Siemens	S0258A	3166-61
02701	DDC	DAC02701	2653-5
028	Siemens	S028-2	3169-124
0280	Siemens	S0280	3166-18
0281	Siemens	S0281	3166-19
0289	Siemens	S0289	3166-62
0291	Siemens	S0291	3216-55
03	**MicroPwr**	**MPOP-03**	★3529
			3205-27
		MPOP-03A	★3529
			3204-42
		MPOP-03B	★3529
			3207-4
		MPOP-03C	★3529
			3205-28
		MPOP-03D	★3529
			3207-5
		MPOP-03E	★3529
			3204-37
	PMI	BUF-03A	3174-13
		BUF-03B	3174-15
		BUF-03E	3174-12
		BUF-03F	3174-14
	PMI	**DAC-03AD**	★3567
			2646-24
		DAC-03BD	★3567
			2646-25
		DAC-03CD	★3567
			2647-6
		DAC-03DD	★3567
			2647-17
	PMI	SW03B	2616-62
		SW03F	2616-63
	Raytheon	**REF-03**	★3586
	Siliconix	IS03A	4461-24
		IS03B	4461-26
		IS03C	4461-28
		IS03D	4461-30
		IS03E	4461-32
		IS03F	4461-34
			(Continued)

¶ Indicates page number in Application Note Directory.
★ Indicates addition data is provided on the page noted.

Base Number	Source	Device	Page-Line
03	Siliconix	IS03G	4461-36
		IS03H	4461-38
	Supertex	VF03	2680-126
	Universal	**IS03A**	★**4930**
			4461-25
		IS03B	★**4930**
			4461-27
		IS03C	★**4930**
			4461-29
		IS03D	★**4930**
			4461-31
		IS03E	★**4930**
			4461-33
		IS03F	★**4930**
			4461-35
		IS03G	★**4930**
			4461-37
		IS03H	★**4930**
			4461-39
	Wintek	**SVC03**	★**2062**
030	DDC	ADH-030II-10	2655-18
		ADH-030II-12	2649-2
	TI	TL030	3155-135
0300	**AD**	**HTC-0300**	★**2847**
			3237-170
	MicroNet	**MN0300A**	★**3045**
			3238-161
03000	Harris	HGABA03000	4460-38
0320	Hughes	HCTR0320	3214-135
0321	Hughes	HSSR0321	590-77
0324	Siemens	TBB0324	3180-45
0330	**Signetics**	**SCC0330M**	★**4862**
			4469-38
0335	**Signetics**	**SCC0335H**	★**4866**
			4463-22
0347	Hughes	HCTR0347	3214-95
	Thomson-CSF		
		TDB0347	3213-17
		TDB0347A	3210-24
		TDB0347B	3211-21
0351	Hughes	HSSR0351	590-78
	Thomson-CSF		
		TDB0351	3200-38
		TDB0351A	3190-19
		TDB0351B	3195-20
0353	Thomson-CSF		
		TDB0353	3209-22
		TDB0353A	3205-6
		TDB0353B	3206-49
04	ArrayTech	AT-LD-04	4473-1
	CompAuto	NM4/04	1965-16
	MicroPwr	**MPOP-04**	★**3529**
			3205-24
		MPOP-04A	★**3529**
			3204-38
		MPOP-04B	★**3529**
			3206-60
		MPOP-04C	★**3529**
			3205-25
		MPOP-04D	★**3529**
			3207-1
		MPOP-04E	★**3529**
			3204-39
	MicroTech	SGA04	4462-6
	National	LX04XXA	3236-11
	PMI	CMP-04B	3162-18
		CMP-04F	3162-19
	PMI	**OP-04**	★**3566**
			3205-29
		OP-04A	★**3566**
			3204-32
		OP-04B	★**3566**
			3206-57
		OP-04C	★**3566**
			3205-30
		OP-04D	★**3566**
			3206-58
		OP-04E	★**3566**
			3204-33
	PMI	SW04B	2616-64
		SW04F	2616-65
	Wintek	**ABP04**	★**2062**
		MAI04	★**2062**
		MFC04	★**2062**
040	Ferranti	ZNREF040	3236-136

Base Number	Source	Device	Page-Line
0400	**Citel**	**MA0400**	★**4628**
			4461-44
	Matra	MA0400	4461-45
0405	**AD**	**HDG-0405**	★**2830**
			2638-6
	Datel	DAC-0405	2638-2
	Intech	0405H	2638-7
	MicroNet	**MN0405**	★**3044**
			2638-3
041	Siemens	S041	3168-84
0410	Harris	HM0410	641-104
042	Siemens	S042	3155-140
			3232-85
0436	Siemens	S0436	641-17
0437	Hughes	HLCD0437	579-153
	Siemens	S0437	641-112
0438	Hughes	HLCD0438A	579-158
044	TI	TL044C	3211-40
		TL044M	3211-38
045	SGS	LS045	3201-44
0450	**Signetics**	**SCC0450M**	★**4862**
			4469-39
0455	**Signetics**	**SCC0455H**	★**4866**
			4463-23
0488	Hughes	HLCD0488	579-110
			2661-43
05	GI	LA05	4466-40
	Intersil	OP-05	3186-36
		OP-05A	3183-53
		OP-05C	3188-55
		OP-05E	3186-43
	LinearTech	OP-05	3186-37
		OP-05A	3183-51
		OP-05C	3188-56
		OP-05E	3186-44
		OP05	3182-68
		OP05A	3181-31
		OP05E	3181-50
	MicroPwr	**OP-05**	★**3529**
			3186-40
		OP-05A	★**3529**
			3183-54
		OP-05C	★**3529**
			3188-58
		OP-05E	★**3529**
			3186-46
	National	LX05XXA	3236-12
	PMI	CMP-05A	3159-3
		CMP-05B	3159-8
		CMP-05E	3159-4
		CMP-05F	3159-9
	PMI	**DAC-05A**	★**3567**
			2647-32
		DAC-05B	★**3567**
			2647-33
		DAC-05C	★**3567**
			2647-34
		DAC-05E	★**3567**
			2647-21
		DAC-05F	★**3567**
			2647-31
		DAC-05G	★**3567**
			2647-35
		OP-05	★**3566**
			3186-41
			¶ 294-9
			¶ 295-16
		OP-05A	★**3566**
			3183-56
			¶ 294-9
			¶ 295-16
		OP-05C	★**3566**
			3188-59
			¶ 294-9
			¶ 295-16
		OP-05E	★**3566**
			3186-47
			¶ 294-9
			¶ 295-16
	PMI	REF-05A	3236-168
		REF-05B	3236-169
		SW-05B	2616-25
		SW-05F	2616-33
		SW-05G	2616-34
	Raytheon	**OP-05**	★**3592**
			3186-38
			(Continued)

Base Number	Source	Device	Page-Line
05	**Raytheon**	**OP-05A**	★**3592**
			3183-52
		OP-05C	★**3592**
			3188-54
		OP-05E	★**3592**
			3186-42
	Rockwell	A05XX	1339-103
	Siliconix	IS05A	4464-19
		IS05B	4464-21
		IS05C	4464-23
		IS05D	4464-25
		IS05E	4464-27
		IS05F	4464-29
		IS05G	4464-31
		IS05H	4464-33
	Universal	**IS05A**	★**4930**
			4464-20
		IS05B	★**4930**
			4464-22
		IS05C	★**4930**
			4464-24
		IS05D	★**4930**
			4464-26
		IS05E	★**4930**
			4464-28
		IS05F	★**4930**
			4464-30
		IS05G	★**4930**
			4464-32
		IS05H	★**4930**
			4464-34
	Wintek	**RDA05**	★**2062**
050	AD	HOS-050	3176-74
			3180-145
		HOS-050A	3176-75
		HOS-050C	3176-76
			3180-146
	Ferranti	ZNREF050	3236-179
	DDC	ADH-050	3236-157
	MicroNet	**MN050**	★**3045**
			3238-162
	Sanyo	STK050	3165-38
0500	**AD**	**HTC-0500**	★**2845**
			★**2847**
			3237-171
	Fairchild	**FGC0500**	★**4634**
		FGE0500	★**4634**
			4460-12
051	DDC	ADH-051	3238-158
0515	Hughes	HLCD0515	2661-44
05203	DDC	THA05203	3238-160
0533	Hughes	HLSS0533	592-77
0538	Hughes	HLCD0538A	579-111
			2661-45
0539	Hughes	HLCD0539A	579-112
			2661-46
054	SGS	M054	3171-44
0540	Hughes	HLCD0540	579-113
			2661-47
0541	Hughes	HLCD0541	579-114
0542	Hughes	HLCD0542	579-115
0548	Hughes	HLCD0548	579-116
			2661-48
055	SGS	M055	3171-45
0550	Hughes	HLCD0550	579-117
			2661-49
0551	Hughes	HLCD0551	579-118
			2661-50
0555	Thomson-CSF		
		TD0555	3220-55
0556	Thomson-CSF		
		TD0556	3220-92
058	Sanyo	STK058	3165-39
05XXA0			
	National	LX05XXA0	3236-13
06	MicroTech	SGA06	4462-7
	National	LX06XXGB	3236-22
		LX06XXXA	3236-14
		LX06XXXD	3236-30
	PMI	**DAC-06B**	★**3567**
			2647-14
		DAC-06C	★**3567**
			2647-18
		DAC-06E	★**3567**
			2646-23
		DAC-06F	★**3567**
			(Continued)

Base Number	Source	Device	Page-Line
06	**PMI**	**DAC-06F**	**2647-5**
		DAC-06G	★**3567**
			2647-16
		OP-06A	★**3566**
			3183-13
		OP-06B	★**3566**
			3187-10
		OP-06F	★**3566**
			3187-11
		OP-06G	★**3566**
			3189-2
	PMI	SW-06B	2621-12
		SW-06F	2621-13
		SW-06G	2621-14
060	AD	HDS-060	3203-9
	AD	**HOS-060**	★**3353**
			3188-34
		HOS-060/883	★**3353**
			3188-35
		HOS-060S	★**3353**
			3175-98
			3176-77
			3180-147
	TI	TL060AC	3198-4
			¶ 294-7
		TL060C	3202-29
			¶ 294-7
		TL060M	3198-5
			¶ 294-7
0600	Siemens	SAB0600	3173-72
06002	National	LX06002D	3236-28
		LX06002G	3236-29
0603	National	LX0603GB	3236-21
0605	**AD**	**HDG-0605**	★**2830**
			2638-34
	Datel	DAC-0605	2638-26
	Intech	0605H	2638-35
	MicroNet	**MN0605**	★**3044**
			2638-27
	OEI	AH0605	3195-19
0607	Hughes	HLCD0607	579-119
			2661-51
061	Ferranti	ZNREF061	3236-180
	TI	TL061	
		Series	¶ 295-6
		TL061AC	3197-58
			¶ 295-6
		TL061BC	3192-45
			¶ 295-6
		TL061C	3202-27
			¶ 295-6
		TL061M	3197-59
			¶ 295-6
062	TI	TL062AC	3208-2
		TL062BC	3205-50
		TL062C	3209-42
		TL062M	3208-3
064	TI	TL064AC	3212-7
		TL064BC	3210-47
		TL064C	3213-32
		TL064M	3213-4
066	TI	TL066AC	3198-16
		TL066BC	3192-46
		TL066C	3202-28
		TL066M	3198-2
07	**AD**	**ADOP-07**	★**3351**
			3182-40
		ADOP-07A	★**3351**
			3181-22
		ADOP-07C	★**3351**
			3184-3
		ADOP-07D	★**3351**
			3184-8
		ADOP-07E	★**3351**
			3182-51
	Apex	PA07	3175-54
			3176-111
			3189-28
		PA07A	3185-32
	Harris	HA-OP07	3182-41
		HA-OP07A	3181-24
		HA-OP07C	3182-57
		HA-OP07E	3181-25
	Intersil	OP-07	3182-39
		OP-07A	3181-23
		OP-07C	3184-4
			(Continued)

Arranged alphanumerically from left to right

© IC MASTER 1984

Base Number	Source	Device	Page-Line
07	Intersil	OP-07D	3184-9
		OP-07E	3182-52
	LinearTech	OP-07	3182-38
		OP-07A	3184-50
		OP-07C	3184-1
		OP-07E	3182-50
		OP07A	3181-51
	MicroPwr	**OP-07**	★**3529**
			3182-43
		OP-07A	★**3529**
			3181-27
		OP-07C	★**3529**
			3184-5
		OP-07E	★**3529**
			3182-55
	PMI	**OP-07**	★**3566**
			3182-44
			¶ 295-4
			¶ 296-5
		OP-07A	★**3566**
			3181-28
			¶ 295-4
			¶ 296-5
		OP-07C	★**3566**
			3203-43
			¶ 295-4
			¶ 296-5
		OP-07D	★**3566**
			3184-11
			¶ 295-4
			¶ 296-5
		OP-07E	★**3566**
			3182-56
			¶ 295-4
			¶ 296-5
	Raytheon	**OP-07**	★**3592**
			3187-24
		OP-07A	★**3592**
			3184-48
		OP-07C	★**3592**
			3184-2
		OP-07D	★**3592**
			3184-7
		OP-07E	★**3592**
			3187-25
	Rockwell	A07XX	1339-108
	TI	OP-07C	3183-59
		OP-07D	3183-43
		OP-07E	3182-49
	Wintek	**ABP07**	★**2062**
070	Sanyo	STK070	3165-40
	TI	TL070AC	3200-55
			¶ 294-7
		TL070C	3200-56
			¶ 294-7
		TL070M	3197-54
			¶ 294-7
0700	**Signetics**	**SCC0700M**	★**4862**
			4469-40
0705	**Signetics**	**SCC0705H**	★**4866**
			4463-24
071	Motorola	TL071	3200-54
		TL071AC	3198-14
		TL071BC	3192-51
	TI	TL071AC	3198-15
			¶ 295-6
		TL071BC	3192-52
			¶ 295-6
		TL071C	3200-57
			¶ 295-6
		TL071M	3197-55
			¶ 295-6
072	Motorola	TL072AC	3208-15
		TL072BC	3205-56
		TL072C	3209-24
		TL072M	3208-14
	TI	TL072AC	3208-16
		TL072BC	3209-26
		TL072C	3209-25
		TL072M	3208-1
074	Motorola	TL074AC	3212-22
		TL074BC	3212-21
		TL074C	3213-18
		TL074M	3213-6
	TI	TL074AC	3212-20
		TL074BC	3210-49
			(Continued)

Base Number	Source	Device	Page-Line
074	TI	TL074C	3213-19
		TL074M	3212-4
0747	Siemens	TBB0747	3208-26
		TBC0747	3206-23
0748	Siemens	TBB0748	3198-38
		TBC0748	3193-56
075	Sanyo	STK075	3165-41
	TI	TL075C	3201-2
			3213-20
		TL075M	3197-53
0750	Fairchild	CT0750	4464-18
	Fairchild	**FGT0750**	★**4634**
			4462-23
077	Sanyo	STK077	3165-42
078	Sanyo	STK078	3165-43
0791	Thomson-CSF		
		TBA0791	3199-10
08	AMD	DAC-08	2640-19
		DAC-08A	2639-13
		DAC-08C	2642-25
		DAC-08E	2640-34
	AD	**ADDAC08**	★**2825**
			2640-20
		ADDAC08A	★**2825**
			2639-14
		ADDAC08C	★**2825**
			2642-26
		ADDAC08E	★**2825**
			2640-35
		ADDAC08H	★**2825**
			2639-15
	Apex	PA08	3175-92
			3176-103
			3189-27
		PA08A	3185-31
	ArrayTech	AT-LD-08	4473-2
	Datel	**DAC-08BC**	★**2863**
			2640-32
		DAC-08BM	★**2863**
			2640-33
	Fairchild	DAC08	2640-21
		DAC08C	2642-27
		DAC08E	2640-36
	MicroPwr	**MPOP-08A**	★**3529**
			3183-49
		MPOP-08B	★**3529**
			3185-3
		MPOP-08C	★**3529**
			3188-38
		MPOP-08E	★**3529**
			3183-50
		MPOP-08F	★**3529**
			3185-4
		MPOP-08G	★**3529**
			3188-39
	Motorola	**DAC-08**	★**3069**
			2640-22
		DAC-08A	★**3069**
			2639-16
		DAC-08C	★**3069**
			2642-28
		DAC-08E	★**3069**
			2640-37
		DAC-08H	★**3069**
			2639-17
	PMI	DAC-08	2640-24
			¶ 279-5
			¶ 281-6
			¶ 281-7
			¶ 281-15
			¶ 283-6
			¶ 283-7
			¶ 284-2
			¶ 284-9
			¶ 284-16
			¶ 294-9
		DAC-08A	2639-20
			¶ 279-5
			¶ 281-6
			¶ 281-7
			¶ 281-15
			¶ 283-6
			¶ 283-7
			¶ 284-2
			¶ 284-9
			¶ 284-16
			¶ 294-9
			(Continued)

Base Number	Source	Device	Page-Line
08	PMI	DAC-08A	¶ 294-9
		DAC-08C	2642-30
			¶ 279-5
			¶ 281-6
			¶ 281-7
			¶ 281-15
			¶ 283-6
			¶ 283-7
			¶ 284-2
			¶ 284-9
			¶ 284-16
			¶ 294-9
		DAC-08E	2640-40
			¶ 279-5
			¶ 281-6
			¶ 281-7
			¶ 281-15
			¶ 283-6
			¶ 283-7
			¶ 284-2
			¶ 284-9
			¶ 284-16
			¶ 294-9
		DAC-08H	2639-21
			¶ 279-5
			¶ 281-6
			¶ 281-7
			¶ 281-15
			¶ 283-6
			¶ 283-7
			¶ 284-2
			¶ 284-9
			¶ 284-16
			¶ 294-9
		MUX-08A	2623-90
			¶ 290-5
		MUX-08B	2623-96
			¶ 290-5
		MUX-08E	2623-88
			¶ 290-5
		MUX-08F	2623-93
			¶ 290-5
	PMI	**OP-08**	★**3566**
			3206-47
		OP-08A	★**3566**
			3183-47
		OP-08B	★**3566**
			3185-1
		OP-08C	★**3566**
			3188-40
		OP-08E	★**3566**
			3183-48
		OP-08F	★**3566**
			3185-2
		OP-08G	★**3566**
			3188-41
	Raytheon	**DAC-08**	★**3591**
			2640-25
		DAC-08A	★**3591**
			2639-22
		DAC-08C	★**3591**
			2642-31
		DAC-08E	★**3591**
			2640-41
		DAC-08H	★**3591**
			2639-23
	Rockwell	A08XX	1339-109
	Signetics	DAC-08	2640-26
		DAC-08A	2639-24
		DAC-08C	2642-32
		DAC-08E	2640-42
		DAC-08H	2639-25
	Signetics	**DAC08**	★**3606**
	TRW-LSI	**MPY08HU**	★**1164**
			604-114
			604-115
	Wintek	**MDS08**	★**2062**
		MPI08	★**2062**
		MCI08	★**2062**
080	AMD	DAC-080QF	2639-12
	RCA	**CA080**	★**3596**
			3202-11
			¶ 293-8
		CA080A	★**3596**
			3197-49
			¶ 293-8
			(Continued)

Base Number	Source	Device	Page-Line
080	**RCA**	**CA080AT**	★**3596**
			3192-21
			¶ 293-8
		CA080B	★**3596**
			3192-19
			¶ 293-8
		CA080C	★**3596**
			3202-12
			¶ 293-8
		CA080T	★**3596**
			3197-50
			¶ 293-8
	Sanyo	STK080	3165-44
	TI	TL080AC	3198-9
			3198-10
			¶ 294-7
		TL080C	3202-32
			¶ 294-7
0800	**Citel**	**MA0800**	★**4628**
			4461-46
	Matra	MA0800	4461-47
	National	ADC0800P	2628-32
		ADC0800PC	2628-33
		DAC0800	2640-23
		DAC0800C	2640-38
0801	**AD**	**MAH-0801**	★**2839**
			2625-8
	Intersil	**ADC0801**	★**2993**
			2625-35
		ADC0801C	★**2993**
			2625-36
	National	ADC0801	2625-37
		ADC0801C	2625-38
		DAC0801C	2642-29
0802	**AD**	**HAS-0802**	★**2839**
			2626-7
		HDH-0802	★**2830**
			2639-42
		HDH-0802M	★**2830**
			2639-43
	Intersil	**ADC0802**	★**2993**
			2627-28
		ADC0802C	★**2993**
			2627-29
	National	ADC0802	2627-32
		ADC0802C	2627-33
		DAC0802	2639-18
		DAC0802C	2639-19
0803	**Intersil**	**ADC0803**	★**2993**
			2627-30
		ADC0803C	★**2993**
			2627-31
	National	ADC0803C	2627-34
08032	**National**	**NS08032**	★**1513**
			1352-44
0804	**Intersil**	**ADC0804**	★**2993**
			2628-22
		ADC0804C	★**2993**
			2628-23
	National	ADC0804C	2628-24
	TI	ADC0804C	2628-26
0805	**AD**	**HDG-0805**	★**2830**
			2643-7
	Datel	DAC-0805	2640-5
	Intech	0805H	2643-8
	MicroNet	**MN0805**	★**3044**
			2640-7
	National	ADC0805C	2628-25
0806	National	DAC0806C	2642-49
0807	National	DAC0807C	2642-41
0808	National	ADC0808	2627-18
			3233-16
		DAC0808	2640-48
		DAC0808C	2640-49
	TI	ADC0808	2627-21
0809	National	ADC0809	3233-17
		ADC0809C	2628-20
081	Motorola	TL081	3202-25
		TL081A	3197-56
		TL081B	3192-43
		TL081M	3198-13
	RCA	**CA081**	★**3596**
			3202-9
			¶ 293-8
		CA081A	★**3596**
			3197-51
			(Continued)

¶ Indicates page number in Application Note Directory.
★ Indicates addition data is provided on the page noted.

Base Number	Source	Device	Page-Line
081	**RCA**	**CA081A**	¶ 293-8
		CA081AT	★ **3596**
			3192-20
			¶ 293-8
		CA081B	★ **3596**
			3192-18
			¶ 293-8
		CA081C	★ **3596**
			3202-10
			¶ 293-8
		CA081T	★ **3596**
			3197-52
			¶ 293-8
	TI	TL081	3202-26
			¶ 295-6
		TL081AC	3197-57
			¶ 295-6
		TL081BC	3192-44
			¶ 295-6
0810	AD	HDD-0810	2643-3
		HDD-0810C	2643-5
		HDD-0810CM	2643-6
		HDD-0810M	2643-4
	AD	**HDS-0810E**	★ **2830**
			2639-5
		HDS-0810EM	★ **2830**
			2639-6
0816	National	ADC0816	2627-20
		ADC0816C	2627-19
			3233-51
			1345-42
0817	National	ADC0817	2628-21
		ADC0817C	3233-52
082	**Exar**	**XR082**	★ **3376**
			3208-4
		XR082C	★ **3376**
			3209-44
		XR082M	★ **3376**
			3208-5
	Motorola	TL082	3209-48
		TL082A	3208-8
		TL082B	3205-51
		TL082M	3208-13
	RCA	**CA082**	★ **3596**
			3209-35
			¶ 293-8
		CA082A	★ **3596**
			3207-59
			¶ 293-8
		CA082AT	★ **3596**
			3205-48
			¶ 293-8
		CA082B	★ **3596**
			3205-46
			¶ 293-8
		CA082C	★ **3596**
			3209-37
			¶ 293-8
		CA082T	★ **3596**
			3207-60
			¶ 293-8
	Sanyo	STK082	3165-45
	SGS	M082	3167-84
		M082AA	3167-85
	TI	TL082AC	3208-9
		TL082BC	3205-52
		TL082C	3209-49
		TL082M	3208-10
0820	**AD**	**HDS-0820**	★ **2830**
			2639-52
		HDS-0820M	★ **2830**
			2639-53
	National	ADC0820B	2626-10
		ADC0820C	2628-4
	Signetics	TDA0820T	3172-42
			3232-89
083	**Exar**	**XR083**	★ **3376**
			3208-6
		XR083C	★ **3376**
			3209-45
		XR083M	★ **3376**
			3208-7
	RCA	**CA083**	★ **3596**
			3209-36
			¶ 293-8
		CA083A	★ **3596**
			(Continued)

Base Number	Source	Device	Page-Line
083	**RCA**	**CA083A**	**3207-61**
			¶ 293-8
		CA083B	★ **3596**
			3205-47
			¶ 293-8
		CA083C	★ **3596**
			3209-38
			¶ 293-8
	Sanyo	STK083	3165-46
	SGS	M083	3167-86
		M083AA	3167-87
	TI	TL083AC	3208-11
		TL083C	3209-50
		TL083M	3208-12
0830	National	DAC0830	2639-3
0831	National	ADC0831B	2627-13
		ADC0831C	2628-13
		DAC0831	2639-48
0832	National	ADC0832B	2627-14
		ADC0832C	2628-14
		DAC0832	2641-31
0833	National	ADC0833B	2627-15
		ADC0833C	2628-15
0834	National	ADC0834B	2627-16
		ADC0834C	2628-16
0838	National	ADC0838B	2627-17
		ADC0838C	2628-17
084	**Exar**	**XR084**	★ **3377**
			3212-8
			¶ 310-3
		XR084C	★ **3377**
			3213-34
			¶ 310-3
		XR084M	★ **3377**
			3212-9
			¶ 310-3
	Motorola	TL084	3213-35
		TL084A	3212-11
		TL084M	3213-5
	RCA	**CA084**	★ **3596**
			3213-29
		CA084A	★ **3596**
			3212-1
		CA084B	★ **3596**
			3210-45
	Sanyo	STK084	3165-47
	TI	TL084AC	3212-12
		TL084BC	3210-48
		TL084C	3213-36
		TL084M	3212-13
0844	**National**	**ADC0844B**	★ **3537**
			2627-6
			2628-18
085	TI	TL085C	3213-37
086	Sanyo	STK086	3165-48
	SGS	M086	3167-88
		M086AA	3167-89
087	AnalogSys	TL087	3186-16
	TI	TL087C	3186-15
			¶ 295-6
		TL087M	3186-14
			¶ 295-6
088	AnalogSys	TL088	3192-55
	TI	TL088C	3192-48
		TL088M	3192-49
089	SGS	M089	3216-135
09	Apex	PA09	3175-66
			3192-29
		PA09A	3185-35
	Datricon	ACS-09	1961-14
	MicroPwr	**OP-09**	★ **3529**
	PMI	**OP-09A**	★ **3566**
			3210-18
		OP-09B	★ **3566**
			3210-41
		OP-09C	★ **3566**
			3211-57
		OP-09E	★ **3566**
			3210-19
		OP-09F	★ **3566**
			3210-42
	Wintek	**RDA09**	★ **2062**
090	SGS	M090	3216-53
0900	Western	WD0900	1965-33
091	TI	TL091M	3200-21
			¶ 295-6

Base Number	Source	Device	Page-Line
092	TI	TL092M	3209-20
094	**Exar**	**XR094**	★ **3377**
			3212-16
		XR094C	★ **3377**
			3213-39
		XR094M	★ **3377**
			3212-17
	TI	TL094M	3213-7
			3213-24
09433	GI	R09433C	3785-7
095	**Exar**	**XR095**	★ **3377**
			3212-18
		XR095C	★ **3377**
			3213-40
		XR095M	★ **3377**
			3212-19
096	**Exar**	**XR096**	★ **3377**
			3212-14
		XR096C	★ **3377**
			3213-38
		XR096M	★ **3377**
			3212-15
099	SGS	M099	3216-136
1	**AMI**	**UA-1**	★ **4619**
			4468-5
	CIC	MSA-1	4473-25
		MSB-1	4473-26
	Datel	**SHM-IC-1**	★ **2864**
			3238-6
	Datel	SHM-IC-1M	3238-7
	Datel	**VFQ-1**	★ **2865**
			3239-27
		VFQ-1C	★ **2865**
			3233-113
	Emulogic	EMUNET-1	1811-9
	Fairchild	DCM-1	1955-3
	Fairchild	**FS-1**	★ **1906**
			1811-11
	Fairchild	Microflame 1	1811-13
	Ferranti	ULA1G	4473-43
		ULA1L	4473-44
		ULA1U	4474-2
		ZNPCM1	3216-99
			¶ 289-5
	Matrox	MTX-A1	1353-43
		MTX-B1	1353-44
	NCR	VLSI-1	4478-4
	Octagon	SYS-1	1965-3
	RCA	**PaCMOS-1**	★ **4824**
			4478-11
		SOS-1	
		Library	★ **4824**
			4478-14
	Signetics	**EPL-1**	★ **4855**
			4478-16
	STC	MSIV-1	4475-27
	Supertex	HV1	2661-33
	Synertek	SYM-1	1959-5
			¶ 279-2
		SYM-1/68	1959-33
			¶ 279-2
		SYM-1/69	1961-11
			¶ 279-2
	TeledyneC	CDA1-3	2617-104
	Zilog	ZDS-1/40	1819-5
10	Apex	PA10	3175-56
			3176-114
			3198-30
		PA10A	3175-55
			3176-112
			3193-14
		PA10M	3175-57
			3198-31
	Burr-Brown	**ADC10HT**	★ **2848**
			2633-20
			¶ 279-10
		ADC10HT-1	★ **2848**
			2633-21
		DAC10HT	★ **2848**
			2649-22
		DAC10HT-1	★ **2848**
			2649-23
		MP10	★ **2849**
			2643-15
			¶ 272-5
			¶ 275-16
			(Continued)

Base Number	Source	Device	Page-Line
10	Burr-Brown	MP10	1354-107
			¶ 272-5
			¶ 275-16
	CompAuto	NM4/10	1965-17
	Datel	**ADC-EK10B**	★ **2862**
			2629-51
		ADC-ET10BC	★ **2862**
			2629-55
		ADC-ET10BM	★ **2862**
			2629-54
		DAC-HA10BC	★ **2860**
			2644-21
		DAC-HA10BC-1	★ **2860**
			2644-19
		DAC-HA10BM	★ **2860**
			2644-22
		DAC-HA10BM-1	★ **2860**
			2644-20
		DAC-HF10BMC	★ **2860**
			2643-49
		DAC-HF10BMM	★ **2860**
			2643-50
		DAC-IC10B	★ **2863**
			2644-7
		DAC-IC10BC	★ **2863**
			2645-45
		DAC-IC10BM	★ **2863**
			2644-8
		DAC-UP10B	★ **2863**
			2646-26
	Datel	VFV-10K	3239-58
	DDC	DDAC-10	2657-30
		HRDC-10	3237-122
		HSDC-10	3237-126
		HXDC-10	3237-139
		SDAC-10	2657-27
	GI	LA10	4466-41
	MCE	MCELM10	3190-55
	MicroPwr	**MPREF-10**	★ **3529**
			3237-70
		OP-10	★ **3529**
			3204-19
		OP-10A	★ **3529**
			3204-20
		OP-10C	★ **3529**
			3204-59
		OP-10E	★ **3529**
			3204-21
	MicroTech	SGA10	4462-8
	MMI	PAL10H-2M	4482-18
	Motorola	**MC10KHSeries**	★ **821**
		MC10KSeries	★ **821**
		VMD/10	★ **1914**
	National	LM10	3190-56
		LM10B	3190-57
		LM10BL	3190-54
		LM10C	3193-41
		LM10CL	3193-40
		MF10	3232-24
	Octagon	SYS-10A	1965-1
	PMI	**DAC-10B**	★ **3567**
			2643-51
		DAC-10C	★ **3567**
			2644-1
		DAC-10F	★ **3567**
			2644-2
		DAC-10G	★ **3567**
			2644-3
			2647-15
	PMI	OP-10	3189-11
			¶ 292-12
			¶ 307-11
		OP-10A	3189-12
			¶ 292-12
			¶ 307-11
		OP-10C	3204-57
			¶ 292-12
			¶ 307-11
		OP-10E	3189-13
			¶ 292-12
			¶ 307-11
		REF-10A	3237-89
		REF-10B	3237-90
		SMP10A	3238-55
		SMP10B	3238-56
		SMP10E	3238-57
			(Continued)

Arranged alphanumerically from left to right.

© IC MASTER 1984

Base Number	Source	Device	Page-Line
10	PMI	SMP10F	3238-58
	Raytheon	**DAC-10B**	★3587
			2645-28
		DAC-10C	★3587
			2645-29
		DAC-10F	★3587
			2645-30
		DAC-10G	★3587
			2645-42
	TeledyneC	CAG10	2615-14
		CAG10A	2615-10
		CAG10B	2615-16
		CAG10C	2615-12
		CAG10D	2615-13
	Wintek	**CFM10**	★2062
		MCL10	★2062
		MCT10	★2062
		SDP10	★2062
100	**AD**	**ADDAC100J**	★2825
			2645-50
		ADDAC100K	★2825
			2645-35
		ADDAC100L	★2825
			2645-36
		ADDAC100S	★2825
			2645-51
		ADDAC100T	★2825
			2645-37
		HOS-100A	★3353
			3174-43
			3176-58
		HOS-100AH	★3353
			3155-27
		HOS-100S	★3353
			3174-44
			3176-56
	Burr-Brown	**DIV100**	★2852
			3233-68
		ISO100AP	★2852
			3155-113
		LOG100	★2852
			3155-133
	Burr-Brown	MPY100	3235-82
		MPY100A	3235-83
		MPY100S	3235-84
	Burr-Brown	**OPA100**	★2850
			3187-40
		OPA100A	★2850
			3187-30
		OPA100B	★2850
			3185-25
		OPA100C	★2850
			3184-39
		OPA100S	★2850
			3185-24
		PGA100AG	★2851
			3155-91
		PGA100BG	★2851
			3155-92
		XTR100AM	★2851
			3156-142
		XTR100AP	★2851
			3156-143
		XTR100BM	★2851
			3156-144
		XTR100BP	★2851
			3156-145
	Cherry	CS100	3166-35
	Comlinear	CLC100	3156-77
	Cromemco	**S-100**	★2007
	Curtis	PR-100A	4351-7
	DataGen	MP/100	1965-24
	Datel	VFV-100K	3239-57
	Exar	**XR-A100**	★3386
			4473-31
		XR-B100	★3386
			4473-32
		XR-C100	★3386
			4473-29
		XR-D100	★3386
			4473-30
		XR-E100	★3386
			4473-33
		XR-F100	★3386
			4473-39
		XR-G100	★3386
			(Continued)

Base Number	Source	Device	Page-Line
100	**Exar**	**XR-G100**	4473-36
		XR-H100	★3386
			4473-37
		XR-J100	★3386
			4473-35
		XR-L100	★3386
			4473-38
		XR-M100	★3386
			4473-41
		XR-U100	★3386
		XR-V100	★3386
			4473-40
		XR-W100	★3386
			4473-42
	Exar	XR-X100	4473-34
	Ferranti	ZNP100	3234-123
		ZNREF100	3237-28
	Inmos	IMSP100	1349-24
			1352-13
			1352-35
	IntMicCir	Interchip 100	4463-31
	Intersil	LM100	3228-36
	LSIComp	**RED100/120**	★803
			589-172
			641-27
	MCC	IMC100	1963-37
	Motorola	MPC100	3222-27
	National	AF100	3232-21
		FOR100B	3233-86
	PMI	**DAC-100A**	★3567
			2644-17
			2644-18
			¶ 279-8
			¶ 279-9
			¶ 283-3
		DAC-100B	★3567
			2645-49
			¶ 279-8
			¶ 279-9
			¶ 283-3
		DAC-100C	★3567
			2646-32
			2646-33
			¶ 279-8
			¶ 279-9
			¶ 283-3
		DAC-100D	★3567
			2647-11
			2647-12
			¶ 279-8
			¶ 279-9
			¶ 283-3
	SBE	PDS-100	1817-8
	Siemens	SDA100	3172-61
	SiliconG	SG100	3228-37
1000	**AMI**	**GA1000**	★4619
			4461-48
		GA1000D	★4619
			★4619
			4462-1
	ArrayTech	AT-D-1000	4466-9
		AT-HSD-1000	4462-39
	CalDevices	CDI1000	4470-6
	CMA	CMA1000 Series	4476-18
	Fairchild	FGE1000	4460-13
	Harris	**HV1000**	★3471
			3173-36
			3234-147
		HV1000A	★3471
			★3471
			3234-148
	Lambda	LAS1000	3229-34
	MicroTech	SG1000	4465-42
	National	AM1000	2621-27
			¶ 291-9
		DAC1000	2644-32
		DAC1000C	2644-33
		DT1000	3169-92
	Plessey	BAA1000	4475-22
	Plessey	**CLA1000**	★4819
			4468-15
	Plessey	SCD1000	4460-15
	Siemens	TUA1000	3168-173
	Siliconix	VQ1000	2683-18
			(Continued)

Base Number	Source	Device	Page-Line
1000	**StrucDes**	**SD1000**	★4402
			4357-2
	Sunrise	**Z1000/Z2000**	★4403
			4357-4
	Supertex	VQ1000	2683-30
	Synertek	MDT-1000	1817-10
	TI	SE1000C	1339-20
			1339-27
			1263-12
		SE1000P	1339-21
			1339-28
			1263-13
	TI	**TMS1000**	★1708
			1339-9
			¶ 263-3
			¶ 275-17
	TI	TMS1000	1263-21
			¶ 263-3
			¶ 275-17
	TI	**TMS1000C**	★1708
			★1709
			1339-2
			¶ 263-3
			¶ 275-17
			★1708
			★1709
			1263-22
			¶ 263-3
			¶ 275-17
	Western	WD1000	1354-78
10000	CalDevices	HCS10000	4463-19
	Fairchild	F10000C	598-93
			3789-30
	LSILogic	**LC10000**	★4762
			4468-22
	Signetics	**SMDEV10000**	★1930
			1817-9
		SMSFT10000	★1930
1001	**AD**	**MAH-1001**	★2839
			2625-28
	LinearTech	LT1001AC	3181-21
		LT1001AM	3181-14
		LT1001C	3182-19
		LT1001M	3182-20
	Monosil	M1001	1259-12
	National	ADC1001C	2630-10
		AM1001	2621-28
			¶ 291-9
		DAC1001	2646-9
		DAC1001C	2646-10
	Siemens	TFA1001	3155-11
	Signetics	**CG1001**	★4838
	Signetics	TDA1001B	3168-108
	Siliconix	**VQ1001**	★3085
			2683-19
	Thomson-CSF	TEA1001	3231-15
			¶ 312-4
			¶ 312-14
	TRW-LSI	**TDC1001**	★3704
			2625-45
	Western	WD1001	1354-75
10010	Fairchild	F10010C	596-65
		F10010M	596-66
100101	Fairchild	F100101	599-55
	Hitachi	HD100101	599-56
	Signetics	**100101**	★858
			599-57
100102	Fairchild	F100102	599-58
	Hitachi	HD100102	599-59
	Signetics	**100102**	★858
			599-60
100107	Fairchild	F100107	599-61
	Hitachi	HD100107	599-62
	Signetics	**100107**	★858
			599-63
100112	Fairchild	F100112	599-37
	Hitachi	HD100112	599-38
	Signetics	**100112**	★858
			599-39
100113	Fairchild	F100113	599-35
	Signetics	**100113**	★858
			599-36
100114	Fairchild	F100114	600-7
	Hitachi	HD100114	600-8
			(Continued)

Base Number	Source	Device	Page-Line
100114	**Signetics**	**100114**	★858
			600-9
100117	Fairchild	F100117	599-49
	Hitachi	HD100117	599-50
	Signetics	**100117**	★858
			599-51
100118	Fairchild	F100118	599-52
	Hitachi	HD100118	599-53
	Signetics	**100118**	★858
			599-54
100122	Fairchild	F100122	599-20
	Hitachi	HD100122	599-21
	Signetics	**100122**	★858
			599-22
100123	Fairchild	F100123	599-40
	Hitachi	HD100123	599-41
	Signetics	**100123**	★858
			599-42
100124	Fairchild	F100124	599-110
	Hitachi	HD100124	599-111
100125	Fairchild	F100125	599-112
	Hitachi	HD100125	599-113
100126	Fairchild	F100126	599-33
	Signetics	**100126**	★858
			599-34
100130	Fairchild	F100130	599-64
	Hitachi	HD100130	599-65
100131	Fairchild	F100131	599-43
	Hitachi	HD100131	599-44
	Signetics	**100131**	★858
			599-45
100136	Fairchild	F100136	599-27
	Hitachi	HD100136	599-28
	Signetics	**100136**	★858
			599-29
10014	Fairchild	F10014C	598-123
		F10014M	598-124
100141	Fairchild	F100141	599-107
	Hitachi	HD100141	599-108
	Signetics	**100141**	★858
			599-109
100142	Fairchild	F100142	599-69
	Hitachi	HD100142	599-70
100145	Fairchild	F100145	599-74
			3770-72
	Hitachi	HD100145	599-75
	Signetics	**100145**	★858
			3770-73
100150	Fairchild	F100150	599-66
	Hitachi	HD100150	599-67
	Signetics	**100150**	★858
			599-68
100151	Fairchild	F100151	599-46
	Hitachi	HD100151	599-47
	Signetics	**100151**	★858
			599-48
100155	Fairchild	F100155	599-96
	Hitachi	HD100155	599-97
	Signetics	**100155**	★858
			599-98
100156	Fairchild	F100156	599-102
	Hitachi	HD100156	599-103
100158	Fairchild	F100158	599-104
	Hitachi	HD100158	599-105
	Signetics	**100158**	★858
			599-106
10016	Fairchild	F10016C	596-44
		F10016M	596-45
100160	Fairchild	F100160	600-4
	Hitachi	HD100160	600-5
	Signetics	**100160**	★858
			600-6
100163	Fairchild	F100163	599-90
	Hitachi	HD100163	599-91
	Signetics	**100163**	★858
			599-92
100164	Fairchild	F100164	599-99
	Hitachi	HD100164	599-100
	Signetics	**100164**	★858
			599-101
100165	Fairchild	F100165	599-129
	Hitachi	HD100165	599-130
	Signetics	**100165**	★858
			599-131
100166	Fairchild	F100166	599-16
	Hitachi	HD100166	599-17
			(Continued)

¶ Indicates page number in Application Note Directory.
★ Indicates addition data is provided on the page noted.

Base Number	Source	Device	Page-Line
100166	**Signetics**	**100166**	★ **858**
			599-18
100170	Fairchild	F100170	599-30
	Hitachi	HD100170	599-31
	Signetics	**100170**	★ **858**
			599-32
100171	Fairchild	F100171	599-93
	Signetics	**100171**	★ **858**
			599-95
100175	**Signetics**	**100175**	★ **858**
			599-114
100179	Fairchild	F100179	599-8
	Hitachi	HD100179	599-9
100180	Fairchild	F100180	599-14
	Signetics	**100180**	★ **858**
			599-15
100181	Fairchild	F100181	599-11
	Hitachi	HD100181	599-12
	Signetics	**100181**	★ **858**
			599-13
100182	Fairchild	F100182	599-19
100183	Fairchild	F100183	599-10
100194	Fairchild	F100194	600-10
1002	AMD	MK1002	3791-81
	AD	**HAS-1002**	★ **2839**
			2629-11
	LinearTech	LT1002A	3181-29
		LT1002AC	3203-24
		LT1002AM	3203-23
		LT1002C	3203-31
		LT1002M	3203-32
	National	AM1002	2621-35
			¶ 291-9
		DAC1002	2646-43
		DAC1002C	2646-44
	Signetics	TEA1002	3171-129
			3173-13
	TRW-LSI	**TDC1002**	★ **3704**
			2626-1
	Western	WD1002	1354-84
	Western	**WD1002-MTB**	★ **2060**
			1354-80
		WD1002-SHD	★ **2058**
			1354-81
100220	Fairchild	F100220	599-116
100221	Fairchild	F100221	599-124
100222	Fairchild	F100222	600-1
100223	Fairchild	F100223	599-125
100224	Fairchild	F100224	599-123
100255	Siemens	SH100255	599-120
	Signetics	**100255**	★ **858**
			599-115
1003	**AD**	**HDH-1003**	★ **2830**
			2643-45
		HDH-1003M	★ **2830**
			2645-34
	ITT	TCA1003	3164-6
		UAA1003	3169-87
	LinearTech	LT1003C	3222-16
		LT1003M	3222-17
	TRW-LSI	**TDC1003**	★ **1164**
			605-33
1004	ITT	TCA1004	3164-7
	LinearTech	LT1004C	3236-59
		LT1004C-2	3236-100
		LT1004M	3236-60
		LT1004M-2	3236-101
	Siliconix	**VQ1004**	★ **3085**
			2683-20
	TI	SE1004C	1339-22
			1339-29
			1263-14
		TMS1004C	1339-3
			1263-23
	TRW-LSI	TDC1004	603-154
			640-27
100402	Fairchild	F100402	599-73
			3770-70
10041	Fairchild	F10041	3790-106
100414	Fairchild	F100414	599-77
		F100414C	3772-7
100415	**AMD**	**AM100415A**	★ **3910**
			3774-16
	Fairchild	F100415	599-80
		F100415A	598-35
		F100415C	3774-13
			(Continued)

Base Number	Source	Device	Page-Line
100415	Hitachi	HM100415	3774-20
	Motorola	**MCM100415**	★ **4047**
	Signetics	100415	3774-21
		100415A	3774-17
		100415B	3774-10
100416	Fairchild	F100416	599-71
		F100416C	3760-67
100422	Fairchild	F100422	599-78
			3772-70
		F100422C	3772-71
	Fujitsu	MBM100422A-7	
			599-79
			3772-66
	Hitachi	HM100422	3772-78
	Motorola	**MCM100422**	★ **4047**
	National	DM100422	3772-81
	Signetics	100422	3772-82
		100422A	3772-83
		100422B	3772-72
100470	**AMD**	**AM100470**	★ **3914**
			3779-56
		AM100470A	★ **3914**
			3779-42
		AM100470SA	★ **3914**
			3779-34
	Fairchild	F100470	599-85
			3779-57
		F100470A	3779-43
	Fujitsu	MBM100470	599-86
			3779-39
		MBM100470A-10	
			599-87
			3779-29
	Hitachi	HM100470	3779-44
		HM100470-1	3779-35
	Motorola	**MCM100470**	★ **4047**
	Signetics	100470	3779-58
		100470A	3779-45
100473	Siemens	GXB100473	3771-84
100474	**AMD**	**AM100474**	★ **3912**
			3775-69
		AM100474A	★ **3912**
			3775-59
	Fairchild	F100474	599-81
			3775-76
	Fujitsu	MBM100474	599-82
		MBM100474-15	
			3775-60
		MBM100474-20	
			3775-66
		MBM100474A-10	
			3775-57
	Hitachi	HD100474	3775-70
		HD100474-1	3775-61
	Motorola	**MCM100474**	★ **4047**
	Siemens	GXB100474	3775-74
	Signetics	100474	599-83
		100474A	599-84
100480	Fairchild	F100480	599-88
			3782-11
	Fujitsu	MBM100480	3782-7
		MBM100480-15	
			3782-5
	Hitachi	HM100480	3782-8
	Motorola	**MCM100480**	★ **4047**
100484	**Motorola**	**MCM100484**	★ **4047**
1005	LinearTech	LT1005C	3228-2
		LT1005M	3228-3
	Thomson-CSF		
		UAB1005	2625-4
		UAC1005	2625-5
	TRW-LSI	TDC1005	3791-57
			3791-58
1006	National	DAC1006	2644-34
		DAC1006C	2644-35
	Siliconix	**VQ1006**	★ **3085**
			2683-21
	TRW-LSI	TDC1006	3791-94
			3791-95
1007	LinearTech	LT1007AC	3181-46
		LT1007AM	3181-47
	National	DAC1007	2646-11
		DAC1007C	2646-12
	TRW-LSI	**TDC1007**	★ **3704**
			2625-41
			2625-42

Base Number	Source	Device	Page-Line
1008	**AD**	**ADSP-1008J**	★ **707**
			571-167
		ADSP-1008K	★ **707**
			571-168
		ADSP-1008S	★ **707**
			571-169
		ADSP-1008T	★ **707**
			571-170
	National	DAC1008	2646-45
		DAC1008C	2646-46
	TRW-LSI	**TDC1008**	★ **1164**
			605-29
			605-30
		TDC1008J	★ **1164**
			605-3
		TDC1008JM	★ **1164**
			605-4
1009	**AD**	**ADSP-1009J**	★ **707**
			572-14
		ADSP-1009K	★ **707**
			572-15
		ADSP-1009S	★ **707**
			572-16
		ADSP-1009T	★ **707**
			572-17
	ITT	TEA1009	3169-71
		UAA1009	3166-17
	LinearTech	LT1009C-2	3236-102
		LT1009M-2	3236-103
	NEC	uPC1009	3170-96
	TRW-LSI	**TDC1009**	★ **1164**
			605-34
			605-35
		TDC1009J	★ **1164**
			604-144
		TDC1009JM	★ **1164**
			604-145
100B122			
	Siemens	SH100B122	600-11
100B250			
	Siemens	SH100B250	599-122
100B252			
	Siemens	SH100B252	600-2
100B384			
	Siemens	SH100B384	599-89
100B392			
	Siemens	SH100B392	599-118
100B393			
	Siemens	SH100B393	599-128
100B395			
	Siemens	SH100B395	599-126
100B396			
	Siemens	SH100B396	599-76
100B402			
	Siemens	SH100B402	599-119
100B404			
	Siemens	SH100B404	599-121
100B417			
	Siemens	SH100B417	599-132
100B419			
	Siemens	SH100B419	599-117
100B420			
	Siemens	SH100B420	599-127
100B480			
	Siemens	SH100B480	600-12
100B481			
	Siemens	SH100B481	600-3
100X100			
	Reticon	RA100X100	3234-29
100Z416			
	Fairchild	F100Z416	599-72
			3760-64
101	**AD**	**AD101A**	★ **3351**
			3175-15
			3191-30
	Burr-Brown	**INA101**	★ **2851**
			3155-72
		INA101SM	★ **2851**
			3155-50
		OPA101AM	★ **2850**
			3185-33
		OPA101BM	★ **2850**
			3184-42
		REF101	★ **2852**
			3237-51
		REF101J	★ **2852**
			3237-26
			(Continued)

Base Number	Source	Device	Page-Line
101	**Burr-Brown**	**REF101S**	★ **2852**
			3237-27
	Fairchild	uA101	3197-3
		uA101A	3175-16
		uA101AM	3191-32
	Intersil	ICL101ALN	3191-14
	LinearTech	LM101A	3175-17
			3191-34
	MicroPwr	MPINA101A	3155-51
		MPINA101B	3155-52
		MPINA101C	3155-53
		MPINA101S	3155-54
	Motorola	LM101A	3175-18
			3191-34
	Motorola	**MVME101**	★ **2041**
	National	LM101	3197-4
		LM101A	3175-19
			3191-36
	Raytheon	LM101A	3175-20
			3191-38
	Siemens	FZH101A	601-98
		FZJ101	601-56
		FZK101	602-39
	Signetics	**LM101**	★ **526**
			3175-21
			3197-5
	Signetics	ST101	3216-121
	SiliconG	SG101	3197-6
		SG101A	3175-22
			3191-39
	SiliconSys	**SSI101A**	★ **4208**
			2681-16
	TeledyneC	CSH101A	3238-71
	TI	LM101A	3175-23
			3191-41
		TC101	3234-98
1010	**AD**	**ADSP-1010J**	★ **707**
			571-172
		ADSP-1010K	★ **707**
			571-173
		ADSP-1010S	★ **707**
			571-174
		ADSP-1010T	★ **707**
			571-175
	IMS	IM1010 Universal Programmer	4353-12
	SBE	1010	1961-19
	Signetics	TEA1010	3173-131
	TRW-LSI	**TDC1010**	★ **1164**
			605-38
			605-39
		TDC1010J	★ **1164**
			604-152
		TDC1010JM	★ **1164**
			604-153
	Weitek	WTL1010AC	637-60
		WTL1010AM	637-61
		WTL1010C	637-62
		WTL1010M	637-63
	Western	**WD1010**	★ **1720**
			1354-74
10100	Fairchild	F10100	597-40
	Motorola	MC10100	597-42
	Signetics	**10100**	★ **858**
			597-45
10101	Fairchild	F10101	597-62
	Hitachi	HD10101	597-64
	Motorola	MC10101	597-65
			¶ 256-10
	Signetics	**10101**	★ **858**
			597-68
10102	Fairchild	F10102	597-33
	Hitachi	HD10102	597-35
	Motorola	MC10102	597-36
	Signetics	**10102**	★ **858**
			597-39
10103	Fairchild	F10103	597-3
	Motorola	MC10103	597-5
	Signetics	**10103**	★ **858**
			597-8
10104	Fairchild	F10104	596-138
		HD10104	596-140
	Hitachi	HD10104	596-141
	Motorola	MC10104	596-142
			(Continued)

Arranged alphanumerically from left to right.

Base Number	Source	Device	Page-Line
10104	**Signetics**	**10104**	★ **858**
			596-145
10105	Fairchild	F10105	597-54
	Hitachi	HD10105	597-56
	Motorola	MC10105	597-57
	National	DM10105	597-60
	Signetics	**10105**	★ **858**
			597-61
10106	Fairchild	F10106	597-26
	Hitachi	HD10106	597-28
	Motorola	MC10106	597-29
	Signetics	**10106**	★ **858**
			597-32
10107	Fairchild	F10107	597-103
	Hitachi	HD10107	597-105
	Motorola	MC10107	597-106
	Signetics	**10107**	★ **858**
			597-109
10108	**Signetics**	**10108**	★ **858**
			596-137
10109	Fairchild	F10109	597-46
	Hitachi	HD10109	597-48
	Motorola	MC10109	597-50
	Signetics	**10109**	★ **858**
			597-53
1011	National	LM1011	3173-30
	Western	**WD1011**	★ **1722**
			1354-76
10110	AMI	S10110	3232-57
	Fairchild	F10110	596-149
	Hitachi	HD10110	596-153
	Motorola	MC10110	596-155
	Signetics	**10110**	★ **858**
			597-2
10111	Fairchild	F10111	597-9
	Hitachi	HD10111	597-13
	Motorola	MC10111	597-15
			¶ 285-12
	Signetics	**10111**	★ **858**
			597-18
10112	**Signetics**	**10112**	★ **858**
			597-25
10113	Fairchild	F10113	597-97
	Motorola	MC10113	597-99
	Signetics	**10113**	★ **858**
			597-102
10114	Fairchild	F10114	598-134
	Motorola	MC10114	598-139
	Signetics	**10114**	★ **858**
			598-147
10115	Fairchild	F10115	598-154
	Motorola	MC10115	598-156
			¶ 256-12
	Signetics	**10115**	★ **858**
			598-159
10116	Fairchild	F10116	598-135
	Hitachi	HD10116	598-138
	Motorola	MC10116	598-140
			¶ 256-10
			¶ 256-12
	National	DM10116	598-146
	Signetics	**10116**	★ **858**
			598-148
10117	Fairchild	F10117	597-83
	Hitachi	HD10117	597-85
	Motorola	MC10117	597-86
	Signetics	**10117**	★ **858**
			597-89
10118	Fairchild	F10118	597-69
	Hitachi	HD10118	597-71
	Motorola	MC10118	597-72
	Signetics	**10118**	★ **858**
			597-75
10119	Fairchild	F10119	597-76
	Hitachi	HD10119	597-78
	Motorola	MC10119	597-79
	Signetics	**10119**	★ **858**
			597-82
1012	**AD**	**ADSP-1012J**	★ **706**
			572-18
		ADSP-1012K	★ **706**
			572-19
		ADSP-1012T	★ **706**
			572-21
	Cybersys	1012	1959-6
			(Continued)

Base Number	Source	Device	Page-Line
1012	**Western**	**WD1012**	★ **1723**
			1354-85
10121	Fairchild	F10121	597-90
	Hitachi	HD10121	597-92
	Motorola	MC10121	597-93
	Signetics	**10121**	★ **858**
			597-96
10123	Fairchild	F10123	596-97
	Motorola	MC10123	596-99
			¶ 285-12
	Signetics	**10123**	★ **858**
			596-101
10124	Fairchild	F10124	598-114
	Hitachi	HD10124	598-116
	Motorola	MC10124	598-117
			¶ 256-12
	Signetics	**10124**	★ **858**
			598-120
10125	Fairchild	F10125	598-106
	Hitachi	HD10125	598-108
	Motorola	MC10125	598-109
			¶ 256-12
	Signetics	**10125**	★ **858**
			598-112
10128	Motorola	MC10128	596-95
			¶ 256-12
10129	Motorola	MC10129	598-152
			¶ 256-12
	Signetics	**10129**	★ **858**
			598-153
1013	Signetics	TDA1013A	3164-117
	Thomson-CSF		
		TEB1013	2682-134
10130	Fairchild	F10130	597-110
	Hitachi	HD10130	597-112
	Motorola	MC10130	597-114
	Signetics	**10130**	★ **858**
			597-117
10131	AMI	S10131	3167-62
	Fairchild	F10131	596-106
	Hitachi	HD10131	596-110
	Motorola	MC10131	596-112
	Signetics	**10131**	★ **858**
			596-117
10132	Fairchild	F10132	597-124
	Hitachi	HD10132	597-126
	Motorola	MC10132	597-127
	Signetics	**10132**	★ **858**
			597-129
10133	Fairchild	F10133	597-134
	Hitachi	HD10133	597-138
	Motorola	MC10133	597-139
	Signetics	**10133**	★ **858**
			597-143
10134	Fairchild	F10134	597-118
	Hitachi	HD10134	597-120
	Motorola	MC10134	597-121
	Signetics	**10134**	★ **858**
			597-123
10135	Fairchild	F10135	596-131
	Motorola	MC10135	596-133
			¶ 257-5
	Signetics	**10135**	★ **858**
			596-136
10136	Fairchild	F10136	596-51
	Hitachi	HD10136	596-53
	Motorola	MC10136	596-54
	Signetics	**10136**	★ **858**
			596-57
10137	Fairchild	F10137	596-60
	Motorola	MC10137	596-62
	Signetics	**10137**	★ **858**
			596-64
10138	Motorola	MC10138	596-58
10139	**Motorola**	**MCM10139**	★ **4047**
			597-159
	Motorola	MCM10139	3760-19
	Signetics	10139	597-160
	TI	SN10139	3760-18
1014	Fairchild	LM1014	3173-48
		LM1014A	3173-49
	National	LM1014	3173-52
			3235-4
	TRW-LSI	**TDC1014**	★ **3704**
			2625-15
			2625-16
			(Continued)

Base Number	Source	Device	Page-Line
1014	**Western**	**WD1014**	★ **1724**
			2665-17
	Western	WD1014	1353-57
			1354-83
10140	TI	SN10140	598-14
			3771-78
10141	Fairchild	F10141	598-94
			3789-34
	Motorola	MC10141	598-96
			3789-31
	Signetics	**10141**	★ **858**
			598-99
	Signetics	10141	3789-33
10142	NEC	uPB10142	3771-74
	TI	SN10142	598-8
			3771-73
10143	**Motorola**	**MCM10143**	★ **4046**
			597-166
			¶ 256-6
	Motorola	MCM10143	3770-60
10144	**Motorola**	**MCM10144**	★ **4046**
			598-21
	Motorola	MCM10144	3772-14
	NEC	uPB10144	598-25
			3772-13
	TI	SN10144	598-26
			3772-19
10145	Fairchild	F10145A	3770-74
		F10145AC	598-3
	Hitachi	HD10145	598-5
			3770-76
	Motorola	**MCM10145**	★ **4046**
			598-6
	Motorola	MCM10145	3770-77
	Signetics	10145	598-7
			3770-78
10146	**Motorola**	**MCM10146**	★ **4046**
			598-42
	Motorola	MCM10146	3774-36
	Motorola	**MCM10146A**	★ **4046**
			3774-14
10147	Hitachi	HD10147	598-15
			3771-110
	Motorola	**MCM10147**	★ **4046**
			598-16
	Motorola	MCM10147	3771-108
	Siemens	GXB10147A	598-18
			3771-109
	TI	SN10147	598-19
			3771-111
10148	Hitachi	HD10148	598-9
			3771-75
	Motorola	MC10148	598-10
	Motorola	**MCM10148**	★ **4046**
			3771-76
	NEC	uPB10148	598-12
			3771-77
	TI	SN10148	598-13
			3771-79
10149	**Motorola**	**MCM10149**	★ **4047**
			597-163
	Motorola	MCM10149	3760-68
	Siemens	GXB10149	597-164
	Signetics	**10149**	★ **858**
			597-165
	Signetics	10149	3760-66
1015	AD	HDD-1015	2647-37
		HDD-1015C	2647-38
		HDD-1015M	2647-39
	AD	**HDS-1015E**	★ **2630**
			2645-25
		HDS-1015EM	★ **2630**
			2645-26
	GI	AY3-1015D	2686-51
	Signetics	TDA1015	3164-118
	Western	**WD1015**	★ **1725**
			1354-72
10150	**RCA**	**MA10150**	★ **4824**
			4467-15
10152	**Motorola**	**MCM10152**	★ **4046**
			598-22
	Motorola	MCM10152	3772-12
10153	Fairchild	F10153	597-135
	Motorola	MC10153	597-140
10154	Motorola	MC10154	596-46

Base Number	Source	Device	Page-Line
10155	**Signetics**	**10155**	★ **858**
			597-158
	Signetics	10155	3770-59
10158	Fairchild	F10158	598-78
	Motorola	MC10158	598-80
	Signetics	**10158**	★ **858**
			598-83
10159	Fairchild	F10159	598-72
	Motorola	MC10159	598-74
	Signetics	**10159**	★ **858**
			598-77
1016	AD	ADSP-1016J	571-159
		ADSP-1016K	571-160
		ADSP-1016S	571-161
		ADSP-1016T	571-162
	Motorola	UAA1016A	3239-94
		UAA1016B	3239-95
	TRW-LSI	**TDC1016-10**	★ **3704**
			2643-48
		TDC1016-8	★ **3704**
			2640-8
			2646-31
		TDC1016-9	★ **3704**
			2643-30
			2645-41
	Weitek	WTL1016	571-151
			641-97
10160	Fairchild	F10160	599-1
	Hitachi	HD10160	599-3
	Motorola	MC10160	599-4
	Signetics	**10160**	★ **858**
			599-7
10161	Fairchild	F10161	596-75
	Hitachi	HD10161	596-77
	Motorola	MC10161	596-79
	Signetics	**10161**	★ **858**
			596-82
10162	Fairchild	F10162	596-67
	Hitachi	HD10162	596-69
	Motorola	MC10162	596-71
	Signetics	**10162**	★ **858**
			596-74
10163	Motorola	MC10163	598-125
			2665-20
10164	Fairchild	F10164	598-84
	Hitachi	HD10164	598-86
	Motorola	MC10164	598-87
	Signetics	**10164**	★ **858**
			598-90
	TI	SN10164	598-91
10165	Fairchild	F10165	598-161
	Hitachi	HD10165	598-163
	Motorola	MC10165	598-164
	Signetics	**10165**	★ **858**
			598-167
10166	Motorola	MC10166	596-30
10168	Fairchild	F10168	597-130
	Motorola	MC10168	597-132
1017	National	LM1017	2661-82
			3170-94
10170	Motorola	MC10170	598-169
10171	Fairchild	F10171	596-89
	Motorola	MC10171	596-91
	Signetics	**10171**	★ **858**
			596-94
10172	Fairchild	F10172	596-83
	Motorola	MC10172	596-85
	Signetics	**10172**	★ **858**
			596-88
10173	Fairchild	F10173	597-144
	Motorola	MC10173	597-146
	Signetics	**10173**	★ **858**
			597-148
10174	Fairchild	F10174	598-64
	Hitachi	HD10174	598-66
	Motorola	MC10174	598-67
	Signetics	**10174**	★ **858**
			598-70
	TI	SN10174	598-71
10175	Fairchild	F10175	597-149
	Hitachi	HD10175	597-151
	Motorola	MC10175	597-152
	Signetics	**10175**	★ **858**
			597-155
10176	Fairchild	F10176	596-124
	Motorola	MC10176	596-126
			(Continued)

¶ Indicates page number in Application Note Directory.
★ Indicates addition data is provided on the page noted.

Base Number	Source	Device	Page-Line
10176	**Signetics**	**10176**	★ **858**
			596-129
10177	Fairchild	F10177	598-101
	Motorola	MC10177	598-102
10178	Motorola	MC10178	596-47
10179	Fairchild	F10179	596-2
	Hitachi	HD10179	596-4
	Motorola	MC10179	596-5
			¶ 256-14
	Signetics	**10179**	★ **858**
			596-8
1018	Signetics	SAB1018	641-38
		SAB1018A	641-39
	TI	TMS1018	3166-26
			1339-16
			1354-114
	TRW-LSI	**TDC1018**	★ **3702**
			2640-6
10180	Fairchild	F10180	596-9
	Hitachi	HD10180	596-11
	Motorola	MC10180	596-12
			¶ 256-14
	Signetics	**10180**	★ **858**
			596-15
10181	Fairchild	F10181	596-22
	Hitachi	HD10181	596-24
	Motorola	MC10181	596-25
			¶ 256-14
	Signetics	**10181**	★ **858**
			596-28
10182	Motorola	MC10182	596-16
10183	Motorola	MC10183	596-20
10186	Fairchild	F10186	596-119
	Motorola	MC10186	596-121
10188	Motorola	MC10188	596-36
	Signetics	**10188**	★ **858**
			596-38
10189	Motorola	MC10189	596-41
	Signetics	**10189**	★ **858**
			596-43
1019	National	LM1019	3171-47
	TRW-LSI	**TDC1019J**	★ **3704**
			2628-50
10190	Motorola	MC10190	598-103
10191	Motorola	MC10191	598-121
10192	Fairchild	F10192	596-102
	Motorola	MC10192	596-104
	Signetics	**10192**	★ **858**
			596-105
10193	Motorola	MC10193	598-126
			2665-21
10194	Motorola	MC10194	598-132
			¶ 288-14
10195	Motorola	MC10195	596-39
10197	Motorola	MC10197	596-146
10198	Motorola	MC10198	598-92
102	**Burr-Brown**	**OPA102AM**	★ **2850**
			3185-34
		OPA102BM	★ **2850**
			3184-43
	Cherry	CS102	641-117
			3166-36
	Comlinear	CLC102	3156-78
	Ferranti	ZNP102	3234-124
	Intersil	LM102	3174-31
	MilerTron	PDC-102	1963-26
	Mostek	MKA102A	4467-5
	Motorola	MMBTS102	3238-131
	National	LM102	3174-33
	SiliconG	SG102	3174-32
	SiliconSys	SSI102	2681-14
	TI	TC102	3234-89
1020	ITT	SAA1020	3172-58
	National	DAC1020	2645-23
		DAC1020C	2645-24
	SBE	1020	1959-34
	Signetics	TDA1020	3164-180
	TI	TMS1020NLL	1339-26
10209	Hitachi	HD10209	597-49
1021	National	ADC1021C	2630-11
		DAC1021	2646-29
		DAC1021C	2646-30
	Signetics	TEA1021	3217-23
	TRW-LSI	**TDC1021**	★ **3704**
			2625-2
			2625-3

Base Number	Source	Device	Page-Line
10210	Fairchild	F10210	596-150
	Hitachi	HD10210	596-154
	Motorola	MC10210	596-156
	Signetics	**10210**	★ **858**
			597-19
10211	Fairchild	F10211	597-10
	Hitachi	HD10211	597-14
	Motorola	MC10211	597-16
	Signetics	**10211**	★ **858**
			597-20
10212	Fairchild	F10212	597-21
	Motorola	MC10212	597-23
10216	Motorola	MC10216	598-141
			¶ 256-12
	Signetics	**10216**	★ **858**
			598-149
1022	National	DAC1022	2647-9
		DAC1022C	2647-10
	Signetics	TDA1022	3167-56
			3232-54
	TI	TMS1022	3166-74
	TRW-LSI	**TDC1022**	★ **1162**
			603-17
			603-18
1023	NEC	uPC1023	3165-123
	Signetics	TDA1023	3239-104
	TRW-LSI	**TDC1023**	★ **1159**
			603-155
			640-28
10230	Hitachi	HD10230	597-113
10231	Fairchild	F10231	596-107
	Hitachi	HD10231	596-111
	Motorola	MC10231	596-113
	Signetics	**10231**	★ **858**
			596-116
1024	NEC	uPC1024	3165-124
	Panasonic	MEL1024K	3234-54
		MEL1024KV	3234-55
	Reticon	RL1024C	3234-65
		RL1024G	3234-66
		RL1024H	3234-67
		RL1024S	3234-68
		RL1024SF	3234-69
		RL1024SFX	3234-33
	Signetics	TDA1024	3239-105
	TI	TMS1024	1339-18
	TRW-LSI	MPY1024	604-140
			604-141
1025	**AD**	**HDS-1025**	★ **2830**
			2643-41
		HDS-1025M	★ **2830**
			2643-42
	TI	TMS1025	1339-19
	TRW-LSI	**TDC1025**	★ **3704**
			★ **3705**
			2625-40
			2627-11
1026	NEC	uPC1026	3168-138
1027	Signetics	SAA1027	3173-70
			3235-17
	TRW-LSI	**TDC1027**	★ **3704**
			★ **3706**
			2625-24
			2625-25
1028	NEC	uPC1028	3168-66
	Signetics	TDA1028	3156-69
	TRW-LSI	**TDC1028**	★ **1160**
			603-153
			641-59
10287	Motorola	MC10287	596-18
1029	Signetics	TDA1029	2621-11
			3156-70
			3173-117
	TRW-LSI	**TDC1029**	★ **3704**
			★ **3707**
			2625-13
			2625-20
103	**Burr-Brown**	**OPA103**	★ **2850**
			3185-18
		OPA103AM	★ **2850**
			3185-26
		OPA103BM	★ **2850**
			3185-23
		OPA103CM	★ **2850**
			3184-36
		OPA103DM	★ **2850**
			(Continued)

Base Number	Source	Device	Page-Line
103	**Burr-Brown**	**OPA103DM**	**3184-34**
	Comlinear	CLC103A	3155-38
			3175-77
			3176-49
			3180-153
		CLC103AI	3201-48
		CLC103AM	3155-39
			3175-78
			3176-50
			3180-154
	Ferranti	ZNP103	3234-125
	Motorola	MMBTS103	3238-132
	National	LM103	3236-67
	Panasonic	AN103	3214-58
	SiliconSys	SSI103	2681-12
	TI	TC103	3234-102
1030	**TRW-LSI**	**TDC1030**	★ **1161**
			3757-64
1031	NEC	uPC1031	3172-74
10315	**Motorola**	**MC10315L**	★ **3070**
			2625-22
			¶ 282-10
			¶ 316-8
10317	**Motorola**	**MC10317L**	★ **3070**
			2625-23
			¶ 282-10
			¶ 316-8
10318	**Motorola**	**MC10318**	★ **3069**
			2640-9
		MC10318-9	★ **3069**
			2639-7
		MC10318C-6	★ **3069**
			2642-44
		MC10318C-7	★ **3069**
			2642-23
1032	NEC	uPC1032	3165-125
	Signetics	SAF1032	3169-57
	Weitek	WTL1032	603-19
		WTL1032C	637-18
		WTL1032M	637-19
1033	Thomson-CSF		
		TEB1033	3206-18
	Weitek	WTL1033	603-20
		WTL1033C	637-16
		WTL1033M	637-17
1034	Ferranti	ZN1034E	3220-60
			¶ 314-14
	Signetics	SA1034	640-84
	Signetics	**SAB1034**	★ **858**
			599-23
		SAF1034	★ **858**
			599-25
103461	Hitachi	HD103461	2684-57
1035	National	LM1035	3164-30
10350	**RCA**	**MA10350**	★ **4824**
			4467-20
1036	National	LM1036	3165-195
1037	LinearTech	LT1037AC	3181-48
		LT1037AM	3181-49
	National	LM1037	3173-115
	Siemens	TDA1037	3164-178
10371	Rockwell	10371	2686-48
			1339-113
1038	National	LM1038	3173-116
1039	Signetics	SAF1039	3169-58
		TEA1039	3232-108
104	AnalogSys	MK104	3232-101
	Burr-Brown	INA104	3155-73
	Burr-Brown	**OPA104AM**	★ **2850**
			3187-35
		OPA104BM	★ **2850**
			3185-15
		OPA104CM	★ **2850**
			3185-13
	Comlinear	CLC104A	3156-79
		CLC104AM	3156-80
	LSIComp	**RDD104**	★ **803**
			577-91
			640-105
	National	LM104	3229-112
	SiliconSys	**SSI104**	★ **4208**
			2681-15
	TI	TC104	3234-107
1040	Ferranti	ZN1040AE	611-106
			¶ 253-13
	National	LM1040	3165-196

Base Number	Source	Device	Page-Line
10402	Fairchild	F10402	598-1
10408	**Intersil**	**IGC10408**	★ **4751**
			4466-35
10410	Fairchild	F10410C	3772-17
10414	Fairchild	F10414C	3772-8
		F10414M	3772-11
	Hitachi	HM10414	3772-9
		HM10414-1	3772-6
	National	DM10414	598-24
			3772-16
		DM10414A	3772-10
10415	**AMD**	**AM10415**	★ **3909**
			3774-9
			3774-43
		AM10415A	★ **3909**
			3774-22
			3774-31
		AM10415M	★ **3909**
			3774-50
		AM10415SA	★ **3909**
			3774-18
			3774-23
	Fairchild	F10415	598-36
			3774-44
		F10415A	598-37
		F10415AC	3774-24
		F10415C	3774-11
	Fujitsu	MBM10415AH	3774-25
	Motorola	**MCM10415**	★ **4047**
			3774-19
		MCM10415A	★ **4047**
			598-43
	Motorola	MCM10415A	3774-27
	National	DM10415	598-45
			3774-46
		DM10415A	3774-28
	Siemens	GXB10415	3774-33
	Signetics	10415	598-46
		10415A	3774-29
		10415B	3774-12
10416	Fairchild	F10416	597-161
		F10416C	3760-62
1042	Motorola	SAA1042	3238-103
		SAA1042A	3238-102
	Plessey	TAB1042	3211-55
	Signetics	TEA1042	3219-38
10422	Fairchild	F10422	3772-73
		F10422C	3772-74
	Fujitsu	MBM10422	3772-69
		MBM10422A-7	
			598-29
			3772-67
		MBM10422E	598-30
		MBM10422H	598-31
		MBM10422N	598-32
			3772-84
	Hitachi	HM10422	3772-79
		HM10422-6	3772-65
		HM10422-7	3772-68
	Motorola	**MCM10422**	★ **4047**
	National	DM10422	598-34
			3772-85
		DM10422A	3772-75
	Signetics	10422	3772-87
		10422A	3772-86
		10422B	3772-76
1043	Plessey	TAB1043	3211-56
	Signetics	SAA1043P	3172-37
		TEA1043	3217-24
	TRW-LSI	**TDC1043**	★ **1164**
			★ **1166**
			604-107
	Weitek	WTL1043	637-64
10430	AMI	S10430	3167-71
			¶ 302-11
10432	Rockwell	10432	1339-99
1044	Signetics	TEA1044	3217-25
1045	ITT	TEA1045	3216-3
10453	Rockwell	10453	1339-96
1046	Siemens	TDA1046	3167-114
	Signetics	TEA1046	3219-39
1047	Siemens	TDA1047	3168-86
10470	**AMD**	**AM10470AC**	★ **3913**
			3779-46
		AM10470AM	★ **3913**
			3779-54
			(Continued)

Arranged alphanumerically from left to right.

Base Number	Source	Device	Page-Line
10470	**AMD**	**AM10470C**	★ **3913**
			3779-59
		AM10470M	★ **3913**
			3779-66
		AM10470SAC	★ **3913**
			3779-36
		AM10470SAM	★ **3913**
			3779-40
	Fairchild	F10470	598-56
			3779-60
		F10470A	3779-47
	Fujitsu	MBM10470A-10	
			598-53
			3779-30
		MBM10470A-15	
			598-54
			3779-37
		MBM10470A-20	
			598-57
			3779-41
	Hitachi	HM10470	3779-48
		HM10470-1	3779-32
	Motorola	**MCM10470**	★ **4047**
			598-55
	Motorola	MCM10470	3779-49
	Motorola	**MCM10470A**	★ **4047**
			3779-33
	National	DM10470	598-60
			3779-50
		DM10470A	598-61
			3779-38
		DM10470L	598-62
			3779-51
	Signetics	10470	3779-61
		10470A	3779-52
10474	**AMD**	**AM10474AC**	★ **3911**
			3775-62
		AM10474AM	★ **3911**
			3775-67
		AM10474C	★ **3911**
			3775-71
		AM10474M	★ **3911**
			3775-77
	Fairchild	F10474C	598-38
			3775-78
	Fujitsu	MBM10474-15	598-39
			3775-63
		MBM10474A-10	
			3775-58
	Motorola	**MCM10474**	★ **4047**
			598-49
	Motorola	MCM10474	3775-72
	Motorola	**MCM10474A**	★ **4047**
			598-50
	Motorola	MCM10474A	3775-64
	National	DM10474	3775-73
		DM10474A	3775-65
	Signetics	10474	598-47
			598-51
		10474A	598-48
			598-52
1048	Siemens	TDA1048	3167-102
	TRW-LSI	**TDC1048**	★ **3703**
			2625-43
			2628-46
10480	Fairchild	F10480	598-63
			3782-12
	Fujitsu	MBM10480	3782-9
		MBM10480-15	3782-6
	Hitachi	HM10480	3782-10
	Motorola	**MCM10480**	★ **4047**
1049	Siemens	GXB1049	3760-63
105	**Burr-Brown**	**OPA105**	★ **2853**
			3187-43
		OPA105UM	★ **2853**
			3184-37
		OPA105V	★ **2853**
			3184-35
		OPA105W	★ **2853**
			3184-33
	Cromemco	CS-105E	1809-16
	Fairchild	uA105M	3229-39
	Motorola	MMBTS105	3238-133
	National	LM105	3229-40
	Siemens	FZH105A	601-99
		FZJ105	601-57
			(Continued)

Base Number	Source	Device	Page-Line
105	Siemens	FZK105	602-40
		TCA105	3238-152
	SiliconG	SG105	3229-42
	SiliconSys	SSI105	2681-20
1050	National	DT1050	3169-103
	Western	**WD1050**	★ **1728**
			1354-46
10500	DDC	DRC10500	3237-118
	Intersil	IGD10500	4461-3
	Motorola	MC10500	597-43
	RCA	**MA10500**	★ **4824**
			4467-23
10501	Fairchild	F10501	597-63
	Motorola	MC10501	597-66
10502	Fairchild	F10502	597-34
	Motorola	MC10502	597-37
10503	Fairchild	F10503	597-4
	Motorola	MC10503	597-6
10504	Fairchild	F10504	596-139
	Motorola	MC10504	596-143
10505	Fairchild	F10505	597-55
	Motorola	MC10505	597-58
10506	Fairchild	F10506	597-27
	Motorola	MC10506	597-30
10507	Fairchild	F10507	597-104
	Motorola	MC10507	597-107
10509	Fairchild	F10509	597-47
	Motorola	MC10509	597-51
1051	National	DT1051	3169-84
10510	Fairchild	F10510	596-151
105100	Fairchild	F105100	597-41
10511	Fairchild	F10511	597-11
10513	Fairchild	F10513	597-98
	Motorola	MC10513	597-100
10514	Fairchild	F10514	598-136
	Motorola	MC10514	598-142
10515	Fairchild	F10515	598-155
	Motorola	MC10515	598-157
10516	Fairchild	F10516	598-137
	Motorola	MC10516	598-143
10517	Fairchild	F10517	597-84
	Motorola	MC10517	597-87
10518	Fairchild	F10518	597-70
	Motorola	MC10518	597-73
10519	Fairchild	F10519	597-77
	Motorola	MC10519	597-80
1052	National	DT1052	3169-101
10521	Fairchild	F10521	597-91
	Motorola	MC10521	597-94
10523	Fairchild	F10523	596-98
10524	Fairchild	F10524	598-115
	Motorola	MC10524	598-118
10525	Fairchild	F10525	598-107
	Motorola	MC10525	598-110
1053	National	DT1053	3169-104
10530	Fairchild	F10530	597-111
	Motorola	MC10530	597-115
10531	Fairchild	F10531	596-108
	Motorola	MC10531	596-114
10532	Fairchild	F10532	597-125
	Motorola	MC10532	597-128
10533	Fairchild	F10533	597-136
	Motorola	MC10533	597-141
10534	Fairchild	F10534	597-119
	Motorola	MC10534	597-122
10535	Fairchild	F10535	596-132
	Motorola	MC10535	596-134
10536	Fairchild	F10536	596-52
	Motorola	MC10536	596-55
10537	Fairchild	F10537	596-61
	Motorola	MC10537	596-63
10538	Motorola	MC10538	596-59
1054	National	DT1054	3169-85
	SGS	TDA1054M	3169-146
			¶ 302-13
10541	Fairchild	F10541	598-95
	Motorola	MC10541	598-97
			3789-32
10544	Motorola	MCM10544	598-23
			3772-15
10545	Fairchild	F10545A	3770-75
		F10545AM	598-4
	Motorola	MCM10545	3770-79
10546	Motorola	MCM10546	598-44
			3774-51
10547	Motorola	MCM10547	598-17

Base Number	Source	Device	Page-Line
10548	Motorola	MCM10548	598-11
1055	National	DT1055	3169-102
	Signetics	TEA1055	3219-40
10553	Fairchild	F10553	597-137
	Motorola	MC10553	597-142
10554	Motorola	MC10554	596-48
10558	Fairchild	F10558	598-79
	Motorola	MC10558	598-81
10559	Fairchild	F10559	598-73
	Motorola	MC10559	598-75
1056	National	DT1056	3169-105
10560	Fairchild	F10560	599-2
	Motorola	MC10560	599-5
10561	Fairchild	F10561	596-76
	Motorola	MC10561	596-80
10562	Fairchild	F10562	596-68
	Motorola	MC10562	596-72
10563	Motorola	MC10563	598-127
			2665-22
10564	Fairchild	F10564	598-85
	Motorola	MC10564	598-88
10565	Fairchild	F10565	598-162
	Motorola	MC10565	598-165
10566	Fairchild	F10566	596-29
	Motorola	MC10566	596-31
10568	Fairchild	F10568	597-131
	Motorola	MC10568	597-133
1057	National	DT1057	3169-106
	Signetics	SAA1057	3168-29
			3214-131
10570	Fairchild	F10570	598-168
10571	Fairchild	F10571	596-90
	Motorola	MC10571	596-92
10572	Fairchild	F10572	596-84
	Motorola	MC10572	596-86
10573	Fairchild	F10573	597-145
10574	Fairchild	F10574	598-65
	Motorola	MC10574	598-68
10575	Fairchild	F10575	597-150
	Motorola	MC10575	597-153
10576	Fairchild	F10576	596-125
	Motorola	MC10576	596-127
10578	Motorola	MC10578	596-49
10579	Fairchild	F10579	596-3
	Motorola	MC10579	596-6
1058	Signetics	TEA1058T	3173-132
10580	Fairchild	F10580	596-10
	Motorola	MC10580	596-13
10581	Fairchild	F10581	596-23
	Motorola	MC10581	596-26
10582	Motorola	MC10582	596-17
10586	Fairchild	F10586	596-120
	Motorola	MC10586	596-122
10590	Motorola	MC10590	598-104
10591	Motorola	MC10591	598-122
10592	Fairchild	F10592	596-103
10593	Motorola	MC10593	598-128
			2665-23
10594	Motorola	MC10594	598-133
10595	Motorola	MC10595	596-40
10597	Motorola	MC10597	596-147
106	AnalogSys	MA106	3165-110
	Burr-Brown	**OPA106/MIL**	★ **2853**
			3187-42
		OPA106U	★ **2853**
			3184-32
		OPA106V	★ **2853**
			3184-31
		OPA106W	★ **2853**
			3184-29
	National	LM106	3159-21
	SGS	M106	3173-19
	SiliconSys	SSI106	2680-56
	Telefunken	U106	3239-108
			¶ 292-4
	TI	LM106	3159-29
1060	Ferranti	ZN1060E	3230-43
	Signetics	SAA1060	2661-62
1061	Signetics	SAA1061	2661-63
10610	Fairchild	F10610	596-152
	Motorola	MC10610	596-157
10611	Fairchild	F10611	597-12
	Motorola	MC10611	597-17
10612	Fairchild	F10612	597-22
	Motorola	MC10612	597-24
10616	Motorola	MC10616	598-144

Base Number	Source	Device	Page-Line
1062	Signetics	SAA1062	2661-42
	Telefunken	TDA1062	3168-174
			¶ 301-3
			¶ 301-4
		TDA1062S	3168-175
			¶ 301-3
			¶ 301-4
1063	Signetics	SAA1063	2662-114
10631	Fairchild	F10631	596-109
	Motorola	MC10631	596-115
1066	Ferranti	ZN1066E	3230-44
			¶ 314-4
		ZN1066J	3230-45
			¶ 314-4
10687	Motorola	MC10687	596-19
10696	Rockwell	10696	1339-91
107	AnalogSys	MW107	3220-11
	Intersil	LM107	3191-16
	LinearTech	LM107	3191-17
	Motorola	LM107	3191-18
	National	LM107	3191-20
	Raytheon	LM107	3191-22
	SiliconG	SG107	3191-23
	TI	LM107	3191-25
1070	Telmos	TM1070	2625-26
	TI	**TMS1070**	★ **1708**
			1339-10
	TI	TMS1070	1263-24
	TI	**TMS1070C**	★ **1708**
			1339-4
	TI	TMS1070C	1263-25
10706	Rockwell	10706	1339-87
1072	Signetics	TDA1072	3167-115
	Telefunken	TDA1072	3167-119
1073	Telmos	TML1073	2625-27
10736	Rockwell	10736	1339-114
10738	Rockwell	10738	1339-86
1074	Signetics	TDA1074A	3164-33
			3235-131
1075	ITT	SAA1075	3171-52
10756	**Intersil**	**ICC10756**	★ **4751**
			4466-36
1077	Signetics	SAB1077	641-30
			3215-87
10788	Rockwell	10788	1339-93
10789	Rockwell	10789	1339-97
108	AMD	LM108	3190-31
		LM108A	3186-17
	AD	**AD108**	★ **3351**
			3190-33
		AD108A	★ **3351**
			3186-19
	AnalogSys	MY108	3155-3
	Fairchild	uA108	3206-45
		uA108AM	3186-21
		uA108M	3190-35
	Harris	LM108	3190-37
		LM108A	3186-23
	Intersil	ICL108LN	3190-26
		LM108	3190-38
		LM108A	3186-24
	LinearTech	LM108	3190-39
		LM108A	3186-25
	MicroPwr	**MPLM108**	★ **3529**
	Motorola	LM108	3190-40
		LM108A	3186-26
	National	LM108	3190-42
		LM108A	3186-28
	PMI	**PM-108**	★ **3566**
			3190-44
		PM-108A	★ **3566**
			3186-30
	SGS	M108	3167-83
	SiliconG	SG108	3190-46
		SG108A	3186-32
	SiliconSys	**SSI108**	★ **4208**
			2681-21
1080	**AD**	**ADSP-1080J**	★ **706**
			571-154
		ADSP-1080K	★ **706**
			571-155
		ADSP-1080S	★ **706**
			571-156
		ADSP-1080T	★ **706**
			571-157
	Cybersys	1080	1955-25

¶ Indicates page number in Application Note Directory.
★ Indicates addition data is provided on the page noted.

Base Number	Source	Device	Page-Line
10800	Motorola	MC10800	596-21
			¶ 276-7
			1337-54
			1257-9
10801	Motorola	MC10801	1337-59
			¶ 271-12
10804	Motorola	MC10804	1337-55
10805	Motorola	MC10805	1337-56
10806	Motorola	MC10806	1337-61
10807	Motorola	MC10807	1337-57
10808	Motorola	MC10808	1337-60
10809	Rockwell	10809	1339-100
10814	Rockwell	10814	1339-89
10815	Rockwell	10815	1339-95
10817	Rockwell	10817	1339-88
1083	Sprague	TDA1083	3168-8
	Telefunken	TDA1083	3168-15
			¶ 301-1
			¶ 301-14
1084	Hughes	H1084	4460-1
1085	Cybersys	1085	1963-6
	Motorola	TDA1085A	3234-151
	Plessey	TDA1085A	3173-55
			¶ 311-3
1087	Telefunken	TEA1087	3232-4
109	AnalogSys	MM109	3235-29
	Fairchild	uA109M	3221-57
	Motorola	**LM109H**	**★3531**
			3221-21
		LM109K	**★3531**
			3221-60
	National	LM109H	3221-24
			¶ 314-6
		LM109K	3221-63
			¶ 314-6
	SGS	M109	3167-57
	SiliconG	SG109K	3221-69
		SG109T	3221-29
1090	Sprague	TDA1090	3168-9
10900	**Motorola**	**MC10900**	**★4796**
			596-34
10901	**Motorola**	**MC10901**	**★4796**
			596-33
10902	**Motorola**	**MC10902**	**★4796**
			596-35
	Motorola	MC10902	1257-10
10904	**Motorola**	**MC10904**	**★4796**
			598-130
10905	**Motorola**	**MC10905**	**★4796**
			598-129
10929	Rockwell	10929	1339-102
1093	Telefunken	TDA1093	3168-97
			¶ 301-3
10930	Rockwell	10930	1339-112
10932	Rockwell	10932	1339-101
10936	Rockwell	10936	1339-90
10937	Rockwell	10937	2664-10
			1353-46
10938	Rockwell	10938	2663-22
			¶ 288-1
10939	Rockwell	10939	2663-23
			¶ 288-1
1094	Telefunken	TDA1094	3168-34
1096	Telefunken	U1096B	2663-139
			¶ 288-2
10H016	**Motorola**	**MC10H016**	**★821**
			596-50
10H100	**Motorola**	**MC10H100**	**★821**
			597-44
10H101	**Motorola**	**MC10H101**	**★821**
			597-67
10H102	**Motorola**	**MC10H102**	**★821**
			597-38
10H103	**Motorola**	**MC10H103**	**★821**
			597-7
10H104	**Motorola**	**MC10H104**	**★821**
			596-144
10H105	**Motorola**	**MC10H105**	**★821**
			597-59
10H106	**Motorola**	**MC10H106**	**★821**
			597-31
10H107	**Motorola**	**MC10H107**	**★821**
			597-108
10H109	**Motorola**	**MC10H109**	**★821**
			597-52
10H113	**Motorola**	**MC10H113**	**★821**
			597-101
10H115	**Motorola**	**MC10H115**	**★821**
			598-158
10H116	**Motorola**	**MC10H116**	**★821**
			598-145
10H117	**Motorola**	**MC10H117**	**★821**
			597-88
10H118	**Motorola**	**MC10H118**	**★821**
			597-74
10H119	**Motorola**	**MC10H119**	**★821**
			597-81
10H121	**Motorola**	**MC10H121**	**★821**
			597-95
10H123	**Motorola**	**MC10H123**	**★821**
			596-100
10H124	**Motorola**	**MC10H124**	**★821**
			598-119
10H125	**Motorola**	**MC10H125**	**★821**
			598-111
10H130	**Motorola**	**MC10H130**	**★821**
			597-116
10H131	**Motorola**	**MC10H131**	**★821**
			596-116
10H135	**Motorola**	**MC10H135**	**★821**
			596-135
10H136	**Motorola**	**MC10H136**	**★821**
			596-56
10H141	**Motorola**	**MC10H141**	**★821**
			598-98
10H145	**Motorola**	**MC10H145**	**★821**
			598-2
	Motorola	MC10H145	3770-71
	Motorola	**MCM10H145**	**★4046**
10H155	**Motorola**	**MC10H155**	**★821**
			597-157
10H158	**Motorola**	**MC10H158**	**★821**
			598-82
10H159	**Motorola**	**MC10H159**	**★821**
			598-76
10H160	**Motorola**	**MC10H160**	**★821**
			599-6
10H161	Motorola	DG10H161	596-78
	Motorola	**MC10H161**	**★821**
			596-81
10H162	Motorola	DG10H162	596-70
	Motorola	**MC10H162**	**★821**
			596-73
10H164	**Motorola**	**MC10H164**	**★821**
			598-89
10H165	**Motorola**	**MC10H165**	**★821**
			598-166
10H166	**Motorola**	**MC10H166**	**★821**
			596-32
10H171	**Motorola**	**MC10H171**	**★821**
			596-93
10H172	**Motorola**	**MC10H172**	**★821**
			596-87
10H173	**Motorola**	**MC10H173**	**★821**
			597-147
10H174	**Motorola**	**MC10H174**	**★821**
			598-69
10H175	**Motorola**	**MC10H175**	**★821**
			597-154
10H176	**Motorola**	**MC10H176**	**★821**
			596-128
10H179	**Motorola**	**MC10H179**	**★821**
			596-7
10H180	Motorola	MC10H180	596-14
10H181	**Motorola**	**MC10H181**	**★821**
			596-27
10H186	**Motorola**	**MC10H186A**	**★821**
			596-123
10H188	**Motorola**	**MC10H188**	**★821**
			596-37
10H189	**Motorola**	**MC10H189**	**★821**
			596-42
10H209	**Motorola**	**MC10H209**	**★821**
			600-44
10H210	**Motorola**	**MC10H210**	**★821**
			597-1
10H211	**Motorola**	**MC10H211**	**★821**
10H3	MMI	PAL10H3-2C	4481-127
10H330	**Motorola**	**MC10H330**	**★821**
			598-151
10H332	**Motorola**	**MC10H332**	**★821**
			598-131
10H334	**Motorola**	**MC10H334**	**★821**
			598-150
10H350	**Motorola**	**MC10H350**	**★821**
			598-105
10H423	**Motorola**	**MC10H423**	**★821**
			596-96
10H424	**Motorola**	**MC10H424**	**★821**
			598-113
10H8	**MMI**	**HAL10H8-2C**	**★4776**
			★4782
			★4788
			4484-18
		HAL10H8C	**★4776**
			★4782
			4483-39
		HAL10H8M	**★4776**
			★4782
			4483-109
		PAL10H8C	**★4768**
			4481-2
		PAL10H8M	**★4768**
			4481-79
	National	DMPAL10H8AC	4480-41
		DMPAL10H8AM	4480-74
		DMPAL10H8C	4481-18
		DMPAL10H8M	4481-94
	Si-Fab	**HCT10H8**	**★4827**
			4483-64
	Zytrex	ZX-CAL10H8	4483-87
10L8	**MMI**	**HAL10L8-2C**	**★4776**
			★4782
			★4788
			4484-19
		HAL10L8C	**★4776**
			★4782
			4483-40
		HAL10L8M	**★4776**
			★4782
			4483-110
		PAL10L8-2C	**★4768**
			4481-128
		PAL10L8-2M	**★4768**
			4482-19
		PAL10L8C	**★4768**
			4481-3
		PAL10L8M	**★4768**
			4481-80
	National	DMPAL10L8AC	4480-42
		DMPAL10L8AM	4480-75
		DMPAL10L8C	4481-19
		DMPAL10L8M	4481-95
	Si-Fab	**HCT10L8**	**★4827**
			4483-65
	Zytrex	ZX-CAL10L8	4483-88
10Z416	Fairchild	F10Z416	597-162
			3760-65
		F10Z416A	3760-61
11	Apex	PA11	3175-58
			3176-138
			3201-13
	Burr-Brown	**MP11**	**★2849**
			2643-16
			¶ 272-5
			¶ 275-16
	Burr-Brown	MP11	1354-108
			¶ 272-5
			¶ 275-16
	Burr-Brown	**OPA11HT**	**★2850**
			3195-45
		UAF11	**★2852**
			3232-10
		UAF11H	**★2852**
			3232-11
	DEC	DCJ11-AC	1285-3
		DCT11-AA	1283-18
			¶ 262-16
			¶ 263-2
		KXT11-AB	1965-30
		KXT11-C	1965-31
		LSI-11/2	1965-11
			(Continued)
11	DEC	LSI-11/23	1965-19
		LSI-11/73	1965-21
		SCB11/21	1965-32
	DDC	DAC-SL-11	2654-40
		DAC-U11-1	2658-4
		DDAC-11	2657-29
		SDAC-11	2657-25
	Infosphere	PCP-11E	1957-10
		PCP-11S	1957-11
	Intech	INTELLEC11-MODEL245	1813-7
	MicroPwr	MPOP-11	3210-17
	MicroPwr	**OP-11**	**★3529**
	Motorola	LM11	3184-55
		LM11C	3187-16
	National	LM11	3184-56
			¶ 293-17
		LM11A	3182-60
			¶ 293-17
		LM11AC	3183-44
			¶ 293-17
		LM11C	3187-17
			¶ 293-17
		LM11CL	3195-21
			¶ 293-17
	Octagon	SYS-11A	1965-2
	PMI	**OP-11A**	**★3566**
			3210-20
		OP-11B	**★3566**
			3210-43
		OP-11E	**★3566**
			3210-21
		OP-11F	**★3566**
			3210-44
	PMI	SMP11A	3238-59
		SMP11B	3238-60
		SMP11E	3238-61
		SMP11F	3238-62
		SMP11G	3238-63
	Supertex	ED11	592-121
	TeledyneC	CDA11	2619-89
		CDA11-S12	2619-88
	Western	AMS-D11	1963-19
	Wintek	**MCI11**	**★2062**
	Zilog	Model 11	1819-1
110	Burr-Brown	FOR110	3233-84
			¶ 286-5
		FOT110	3233-90
			¶ 286-5
			¶ 287-10
	Intersil	LM110	3174-20
	Motorola	**EXORSET110**	**★1922**
		MVME110	**★2041**
			1967-4
	National	LM110	3174-24
	SGS	M110	3167-72
	SiliconG	SG110	3174-21
	Siliconix	**LD110**	**★3083**
			2637-35
			¶ 282-11
			¶ 283-5
			¶ 308-4
1100	**Fujitsu**	**B1100**	**★4637**
			4461-10
	Lambda	LAS1100	3229-53
	SMOS	SED1100	2661-52
	Signetics	**SCC1100M**	**★4862**
			4469-41
	Solarise	CK1100A	3214-10
			3235-89
	TI	SE1100C	1339-23
			1339-30
			1263-15
	TI	**TMS1100**	**★1708**
			1339-11
	TI	TMS1100	1263-26
	TI	**TMS1100C**	**★1708**
			1339-5
	TI	TMS1100C	1263-27
	Western	**WD1100**	**★1730**
			1354-79
		WD1100-13	**★1730**
			1354-77
11000	Intersil	IGD11000	4461-4
1101	TI	TCM1101	3217-30
1102	SMOS	SMC1102	1263-10

Arranged alphanumerically from left to right.

© IC MASTER 1984

Base Number	Source	Device	Page-Line
1103	ITT	UAA1103	3169-88
1104	**TI**	**TMS1104C**	★ **1709**
11049	Rockwell	11049	1339-94
1105	**Signetics**	**SCC1105H**	★ **4866**
			4463-25
1108	Hitachi	HA1108	3170-27
111	AMD	LF111	3159-60
		LM111	3159-52
	AD	AD111	3159-37
	AnalogSys	MK111	641-120
	Fairchild	CCD111	3234-44
			3234-90
		uA111M	3159-39
	Intersil	DG111	2616-55
		LM111	3159-40
	Motorola	LM111	3159-41
	National	LF111	3159-58
		LM111	3159-43
	Raytheon	LM111	3159-45
	Siemens	FZH111A	601-100
		FZJ111	601-54
	Signetics	LM111	3159-46
	SiliconG	SG111	3159-48
	Siliconix	**DGM111A**	★ **3077**
			2616-51
			2616-52
		DGM111B	★ **3077**
			2616-53
			2616-54
		LD111A	★ **3083**
			2637-36
			¶ 282-11
			¶ 283-5
			¶ 308-4
	Telefunken	U111	3232-5
	TI	LM111	3159-36
		TL111	3159-5
1111	Monosil	M1111	1259-13
	National	LM1111	3164-49
	Sanyo	LA1111	3168-47
1112	SMOS	SMC1112	1263-11
1114	Solarise	CK1114A	3214-11
			3235-90
1115	Intersil	ICM1115	3166-79
		ICM1115A	3166-80
		ICM1115B	3166-81
1117	TI	TMS1117	3220-9
		TMS1117NLP	3220-10
112	AnalogSys	MA112	3193-10
	Fairchild	CCD112	3234-45
			3234-91
	Intersil	D112C	2622-32
		D112M	2622-33
		DG112	2616-56
	Motorola	LM112	3190-27
	National	LM112	3190-29
	TRW-LSI	**MPY112K**	★ **1163**
			★ **1164**
			604-127
			604-128
11201	National	LF11201	2616-75
11202	National	LF11202	2616-76
1121	ITT	SAA1121	3172-59
	Motorola	MHW1121	3170-65
	National	LM1121A	3164-50
		LM1121B	3164-51
		LM1121C	3164-52
	TI	TMS1121	1339-33
11211	Hitachi	HA11211	3167-155
11215	Hitachi	HA11215	3172-101
11219	Hitachi	HA11219	3168-113
1122	Signetics	PCA1122	3167-36
11220	Hitachi	HA11220	3172-102
11221	Hitachi	HA11221	3172-103
11223	Hitachi	HA11223	3168-126
11225	Hitachi	HA11225	3168-57
11226	Hitachi	HA11226	3164-48
11227	Hitachi	HA11227	3168-127
11229	Hitachi	HA11229	3171-150
11235	Hitachi	HA11235	3171-64
11238	Hitachi	HA11238	3172-104
1124	Hitachi	HA1124	3171-151
	SGS	M1124	3169-47
11244	Hitachi	HA11244	3171-65
11247	Hitachi	HA11247	3170-113
1125	Hitachi	HA1125	3171-152

Base Number	Source	Device	Page-Line
11251	Hitachi	HA11251	3167-156
1126	Hitachi	HA1126	3170-28
1127	Motorola	MHW1127	3170-66
113	AnalogSys	MA113	3156-141
	Intersil	D113C	2622-34
		D113M	2622-35
	National	LM113	3236-50
		LM113-1	3236-51
		LM113-2	3236-52
1130	Sanyo	LA1130	3167-130
1131	National	LM1131A	3164-53
		LM1131B	3164-54
		LM1131C	3164-55
11331	National	LF11331	2616-77
11332	National	LF11332	2616-78
11333	National	LF11333	2616-79
1137	Hitachi	HA1137	3168-58
114	Burr-Brown	FOT114	3233-91
		FOT114-IR	3233-92
	SiliconSys	**SSI114**	★ **4208**
			2681-13
			2681-22
1140	Sanyo	LA1140	3168-79
	Varix	PG1140-X	4357-8
11405	Hitachi	HA11405	3172-105
11409	Hitachi	HA11409	3166-163
			3170-114
11412	Hitachi	HA11412	3170-115
11417	Hitachi	HA11417	3170-116
1143	ContLogic	CCS-1143A	1957-8
1144	Solarise	CK1144A	3214-12
			3235-91
1145	Solarise	CK1145A	3214-13
			3235-92
1146	Thomson-CSF		
		TDB1146	3229-65
115	AnalogSys	MU115	3233-72
	Intersil	G115A	2622-10
		G115B	2622-11
	ITT	SAY115	3166-16
	Panasonic	MN115P	640-79
	Siemens	FZH115B	601-101
		FZJ115	601-55
	SiliconSys	**SSI115**	★ **4208**
			2681-23
	Siliconix	**G115A**	★ **3080**
			2622-16
		G115B	★ **3080**
			2622-17
1150	Sanyo	LA1150	3168-80
11500	**Intersil**	**IGC11500**	★ **4751**
			4466-37
	Intersil	IGD11500	4461-5
11508	National	LF11508	2623-91
11509	National	LF11509	2623-8
1151	Hitachi	HA1151	3167-107
	SGS	TDA1151	3173-59
1156	Hitachi	HA1156	3168-128
11580	Hitachi	HA11580	3170-117
116	AnalogSys	MC116	3238-87
	Intersil	DG116	2616-57
		G116A	2622-6
		G116B	2622-7
	Panasonic	MN116P	640-80
	SiliconSys	**SSI116**	★ **4208**
			2681-17
	Siliconix	G116A	2622-8
		G116B	2622-9
1160	Sanyo	LA1160	3168-111
1164	Signetics	SAB1164	641-19
			3214-86
11660	Rockwell	11660	1339-82
11696	Rockwell	11696	1339-92
117	Fairchild	uA117	3228-105
	Intersil	G117A	2622-3
		G117B	2622-4
	LinearTech	LM117	3228-109
		LM117AHV	3229-61
		LM117HV	3229-57
		LT117A	3228-111
		LT117AHV	3229-63
	MCE	MCELM117	3228-113
	Motorola	**LM117**	★ **3532**
			3228-116
		LM117L	★ **3532**
			3228-97
			(Continued)

Base Number	Source	Device	Page-Line
117	**Motorola**	**LM117M**	★ **3532**
			3229-26
	National	LM117	3228-119
			¶ 314-6
	SiliconG	SG117	3228-101
			3228-122
	SiliconSys	**SSI117**	★ **4208**
			2681-25
	Siliconix	G117A	2622-5
	TI	TL117L	3228-104
	Unitrode	**UC117**	★ **3711**
			3229-3
1170	SGS	TDA1170	3172-82
	Sprague	TDA1170	3172-95
	TI	**TMS1170**	★ **1708**
			1263-28
11700	National	LM11700A	3204-55
11701	Hitachi	HA11701	3170-11
11702	Hitachi	HA11702	3170-18
11703	Hitachi	HA11703	3170-9
11704	Hitachi	HA11704	3170-2
11705	Hitachi	HA11705	3170-3
11706	Hitachi	HA11706	3170-4
11707	Hitachi	HA11707	3170-19
1171	Motorola	MHW1171	3170-67
	Signetics	PCF1171	3166-4
			3166-117
1172	Motorola	MHW1172	3170-68
	Signetics	PCF1172	3166-5
			3166-118
118	AMD	LM118	3193-44
	AnalogSys	MS118	3238-86
	Harris	LM118	3193-46
	Intersil	DG118	2616-58
		G118A	2622-12
		G118B	2622-13
	LinearTech	LM118	3193-47
	National	LM118	3193-48
	Siliconix	**G118A**	★ **3080**
			2622-18
	TI	LM118	3193-50
1180	SGS	TDA1180	3171-99
11806	Rockwell	11806	1339-85
1182	Motorola	MHW1182	3170-69
1185	Motorola	TDA1185	3239-3
119	AMD	LM119	3161-19
	Intersil	G119A	2622-22
		G119B	2622-23
	National	LM119	3161-18
			3161-21
	Signetics	LM119	3161-23
	Siliconix	**G119A**	★ **3080**
			2622-24
		G119B	★ **3080**
			2622-25
1190	Motorola	TDA1190	3171-158
		TDA1190P	3171-160
	RCA	CA1190	3171-174
	SGS	TDA1190	3172-3
	Sprague	TDA1190Z	3172-14
11902	Motorola	TDA11902	3171-159
1191	RCA	CA1191	3171-175
1195	Siemens	TDA1195	2621-10
1196	Hitachi	HA1196	3168-129
1197	Hitachi	HA1197	3167-108
1199	Hitachi	HA1199	3167-109
11C01	Fairchild	11C01C	600-43
11C05	Fairchild	11C05C	600-16
		11C05M	600-17
11C06	Fairchild	11C06C	600-34
		11C06M	600-35
11C70	Fairchild	11C70C	600-31
11C90	Fairchild	11C90C	600-25
			3215-65
		11C90M	600-26
			3215-66
11C91	Fairchild	11C91C	600-23
			3215-53
		11C91M	600-24
			3215-54
12	Apex	PA12	3175-80
			3176-115
			3198-28
		PA12A	3175-79
			3176-113
			3193-13
			(Continued)

Base Number	Source	Device	Page-Line
12	Apex	PA12M	3175-81
			3198-29
	Burr-Brown	**OPA12HT**	★ **2851**
			3201-34
		VFC12	★ **2849**
	Cromemco	**ADC-12**	★ **2025**
		DAC-12	★ **2024**
	Datel	**ADC-EK12B**	★ **2862**
			2634-12
		ADC-EK12DC	★ **2862**
			2635-35
		ADC-EK12DM	★ **2862**
			2635-36
		ADC-ET12BC	★ **2862**
			2635-12
		ADC-ET12BM	★ **2862**
			2634-9
		ADC-HC12BMC	★ **2860**
			2634-7
		ADC-HC12BMM	★ **2860**
			2634-8
		ADC-HS12BMC	★ **2860**
			2631-1
		ADC-HS12BMM	★ **2860**
			2631-2
		ADC-HX12BGC	★ **2860**
			2632-31
		ADC-HX12BMM	★ **2860**
			2632-32
		ADC-HZ12BGC	★ **2860**
			2630-53
		ADC-HZ12BMM	★ **2860**
			2630-54
		DAC-HA12BC	★ **2860**
			2650-24
		DAC-HA12BC-1	★ **2860**
			2650-26
		DAC-HA12BM	★ **2860**
			2650-25
		DAC-HA12BM-1	★ **2860**
			2650-27
		DAC-HA12DC	★ **2860**
			2657-6
		DAC-HA12DC-1	★ **2860**
			2657-4
		DAC-HA12DM	★ **2860**
			2657-7
		DAC-HA12DM-1	★ **2860**
			2657-5
		DAC-HF12BMC	★ **2861**
			2649-5
		DAC-HF12BMM	★ **2861**
			2649-6
		DAC-HK12BGC	★ **2861**
			2652-1
		DAC-HK12BGC-2	★ **2861**
			2652-2
		DAC-HK12BMM	★ **2861**
			2652-3
		DAC-HK12DGC	★ **2861**
			2656-44
		DAC-HK12DMM	★ **2861**
			2656-45
		DAC-HZ12BGC	★ **2861**
			2652-10
		DAC-HZ12DGC	★ **2861**
			2656-46
		DAC-HZ12DMC	★ **2861**
			2656-47
		DAC-HZ12DMM	★ **2861**
			2656-48
	Datel	HAC-HK12BMM-2	2652-4
		HAC-HZ12BMM	2652-11
	Datricon	ACS-12	1959-21
	Ferranti	ULA12C	4468-26
			4469-36
		ULA12N	4470-39
			4471-11
		ULA12RA	4464-39
		ULA12RB	4468-32
			4469-1
		ULA12RC	4470-19
			4470-45
			(Continued)

¶ Indicates page number in Application Note Directory.
★ Indicates addition data is provided on the page noted.

Base Number	Source	Device	Page-Line
12	Ferranti	ULA12RD	4471-35
			4471-53
	DDC	DAC-SL-12	2652-41
		DAC-U12-1	2658-1
		DDAC-12	2657-28
		SDAC-12	2657-19
	Intech	DAC-HK12BGC	2652-5
		DAC-HK12BMM	2652-6
	Interdesign	ULA12C	4468-27
			4469-37
		ULA12N	4470-40
			4471-12
		ULA12RA	4464-40
		ULA12RB	4468-33
			4469-2
		ULA12RC	4470-20
			4470-46
		ULA12RD	4471-36
			4471-54
	ICC	LP-12	1965-9
		LP-12P	1965-8
	MicroPwr	**MPOP-12A**	**★3529**
			3203-39
		MPOP-12B	**★3529**
			3204-3
		MPOP-12C	**★3529**
			3203-33
		MPOP-12E	**★3529**
			3203-40
		MPOP-12F	**★3529**
			3204-4
		MPOP-12G	**★3529**
			3203-34
	PMI	**OP-12**	**★3566**
			3206-48
		OP-12A	**★3566**
			3183-45
		OP-12B	**★3566**
			3184-58
		OP-12C	**★3566**
			3188-36
		OP-12E	**★3566**
			3183-46
		OP-12F	**★3566**
			3184-59
		OP-12G	**★3566**
			3188-37
	SiliconSys	**SCA-12**	**★3685**
			★4872
			4475-26
			★3685
			★4872
			3238-106
	Supertex	VF12	2680-127
	Toshiba	TLCS-12A	1283-27
120	AnalogSys	MS120	3238-83
	Burr-Brown	FOR120	3233-85
		FOT120	3233-93
	Datal/O	M120A Gang Programmer	4353-2
	Intersil	D120C	2622-36
		D120M	2622-37
		DG120	2620-90
		IT120	3157-56
		IT120A	3157-57
	National	AF120	3217-110
		TBA120	3168-65
		TBA120S	3171-162
	Plessey	TBA120	3168-67
			3171-172
	SGS	L120	3238-79
			¶ 311-2
		M120	3773-123
			¶ 320-5
	Siemens	TBA120S	3168-85
	Signetics	ST120	3218-92
			3219-100
		TBA120U	3168-90
			3168-123
			3172-10
	SiliconG	SG120-05K	3226-39
		SG120-05P	3226-27
		SG120-05T	3226-21
		SG120-08K	3226-96
			(Continued)

Base Number	Source	Device	Page-Line
120	SiliconG	SG120-08R	3226-97
		SG120-08T	3226-88
		SG120-12K	3227-8
		SG120-12P	3226-132
		SG120-12T	3226-119
		SG120-15K	3227-59
		SG120-15R	3227-49
		SG120-15T	3227-34
		SG120-18K	3227-86
		SG120-18R	3227-87
		SG120-18T	3227-80
		SG120-20K	3227-101
		SG120-20R	3227-102
		SG120-20T	3227-97
		SG120-5	3226-65
			3226-60
			3226-57
	Siliconix	**LD120**	**★3083**
			2637-54
			¶ 282-12
			¶ 283-5
			¶ 308-11
	Telefunken	TBA120	3168-96
			3172-18
1200	AMD	MCA1200	4460-27
	ArrayTech	AT-D-1200	4466-10
		AT-HSD-1200	4462-40
	Cherry	1200	4471-26
	Cirel	**MA1200**	**★4628**
			4461-49
	Fairchild	**FGC1200**	**★4634**
	LSIComp	C1200	2662-103
			3166-129
	LSILogic	**LCA1200**	**★4762**
			4460-28
	Matra	MA1200	4461-50
	Motorola	**MCA1200ECL**	**★4796**
			4460-29
	National	MCA1200ECL	4460-30
	Plessey	**CLA1200**	**★4819**
			4468-16
	SGS	TDA1200	3168-83
			¶ 301-15
	Sunrise	**Z1200**	**★4403**
	TI	**TMS1200**	**★1708**
			1339-12
	TI	TMS1200	1263-29
	TI	**TMS1200C**	**★1708**
			★1709
			1339-6
			★1708
			★1709
			1263-30
12000	CalDevices	HCS12000	4461-51
	Motorola	MC12000	637-69
	Motorola	**MC12000Series**	**★820**
12001	Hitachi	HA12001	3169-131
	Intersil	IGC12001	4466-38
12002	Hitachi	HA12002	3173-83
12005	Hitachi	HA12005	3169-133
12006	Hitachi	HA12006	3169-119
12009	Motorola	MC12009	640-90
			¶ 309-11
			3215-55
			3215-59
1200 & Z2400	Sunrise	Z1200 & Z2400 Gang Programmers	4357-5
1201	Hitachi	HA1201	3168-36
	Panasonic	MN1201	586-28
			1337-121
	Sanyo	LA1201	3167-148
12010	Hitachi	HA12010	2661-26
12011	Hitachi	HA12011	2661-27
	Motorola	MC12011	640-97
			¶ 309-11
			3215-62
12012	Hitachi	HA12012	3165-156
12013	Motorola	MC12013	640-106
			¶ 309-11
			3215-67
12014	Motorola	MC12014	3214-7
12015	Motorola	MC12015	3215-75
12016	Motorola	MC12016	3215-78

Base Number	Source	Device	Page-Line
12017	Hitachi	HA12017	3165-117
	Motorola	MC12017	3215-83
12018	Motorola	MC12018	3215-86
12019	Motorola	MC12019	598-160
			3215-74
1202	**AD**	**HAS-1202**	**★2839**
			2630-32
		MAS-1202	**★2839**
			2629-1
	Panasonic	MN1202	1337-120
12022	Motorola	MC12022	3215-88
12023	Motorola	MC12023	3214-74
1203	GI	AY7-1203	3217-151
	Panasonic	MN1203	3771-93
1204	Panasonic	MN1204A	1337-118
		MN1204B	1337-119
12040	Motorola	MC12040	3214-54
1205	**AD**	**HDH-1205**	**★2830**
			2650-38
		HDH-1205M	**★2830**
			2650-39
	Panasonic	MN1205A	2662-116
		MN1205E	2662-100
		MN1205F	2662-115
		MN1205H	2664-5
		MN1205P	2662-101
		MN1205Q	2662-102
1206	**AD**	**HDD-1206J**	**★2830**
			2651-43
		HDD-1206S	**★2830**
			2651-44
	Panasonic	MN1206	1337-116
12061	Motorola	MC12061	3214-8
			¶ 310-2
1207	Panasonic	MN1207	1337-117
12071	Motorola	MC12071	641-20
			3214-68
			3215-79
12073	Motorola	MC12073	3214-73
12074	Motorola	MC12074	3214-75
12075	Motorola	MC12075	3214-76
1208	**MicroPwr**	**MP1208B**	**★3046**
			2654-51
		MP1208K	**★3046**
			2654-52
		MP1208T	**★3046**
			2654-53
	National	DAC1208	2651-8
	Panasonic	MN1208	3758-13
1209	MicroPwr	MP1209A	2654-18
		MP1209J	2654-19
		MP1209S	2654-20
	National	DAC1209	2653-51
12090	Motorola	MC12090	3214-77
120H12	National	LM120H12	3226-117
120H15	National	LM120H15	3227-32
120H5	National	LM120H5	3226-17
120K12	National	LM120K12	3226-128
120K15	National	LM120K15	3227-45
120K5	National	LM120K5	3226-35
121	AnalogSys	MD121	2682-143
	Datal/O	M121A Gang Programmer	4353-3
	Fairchild	CCD121	3234-97
	Intersil	D121C	2622-38
		D121M	2622-39
		DG121	2620-91
		IT121	3157-58
	National	AF121	3216-19
		LM121	3156-27
		LM121A	3156-28
	SGS	L121	3238-76
			¶ 311-2
	Siemens	FZH121	601-77
		FZJ121	601-50
	Siliconix	**LD121A**	**★3083**
			2637-55
			¶ 282-12
			¶ 283-5
			¶ 308-11
1210	MicroPwr	MP1210H	2655-9
		MP1210R	2655-10
		MP1210Z	2655-11
	National	ADC1210	2634-20
		ADC1210C	2634-21
			(Continued)

Base Number	Source	Device	Page-Line
1210	National	DAC1210	2655-37
	Sanyo	LA1210	3168-5
1211	Hitachi	HA1211	3168-37
	National	ADC1211	2635-15
		ADC1211C	2635-16
1215	NEC	uPC1215V	3167-110
1217	SiliconG	SG1217	3196-47
1218	National	DAC1218	2651-9
1219	National	DAC1219	2654-1
122	AnalogSys	MW122	3220-6
	Cherry	CS122	641-118
			3166-37
			3234-114
	Fairchild	CCD122	3234-46
			3234-95
	Intersil	IT122	3157-59
	National	AF122	3216-20
		LM122	3220-13
	SiliconSys	**SSI122**	**★4208**
	Siliconix	DGM122A	2619-105
		DGM122B	2619-106
	Siliconix	**G122A**	**★3080**
			2622-21
		LD122	**★3083**
			2637-56
			¶ 282-13
			¶ 283-5
1220	ITT	SAA1220	3172-60
	National	DAC1220	2655-25
		DAC1220C	2655-26
	SGS	TDA1220A	3168-6
1221	Motorola	MHW1221	3170-70
	National	DAC1221	2656-14
		DAC1221C	2656-15
1222	Cermetek	CH1222	3217-138
	Motorola	MHW1222	3170-71
	National	DAC1222	2656-27
		DAC1222C	2656-28
	Sanyo	LA1222	3168-48
1223	Cermetek	CH1223	3217-139
1224	Cermetek	CH1224	3217-140
1225	Cermetek	CH1225	3217-131
123	Fairchild	CCD123	3234-47
			3234-96
		SH123	3221-117
		uA123	3221-120
	Intersil	D123C	2622-48
		D123M	2622-49
		DG123	2617-96
		DG123B	2617-100
		G123	2621-99
	LinearTech	LM123	3221-125
		LM123A	3221-126
	Motorola	**LM123**	**★3531**
			3221-129
		LM123A	**★3531**
			3221-130
	National	LM123	3222-3
			¶ 314-6
	SGS	L123CB	3229-36
		L123CT	3229-37
	SiliconG	SG123	3222-6
	Siliconix	D123A	636-132
			2622-52
		D123B	636-133
			2622-53
		DG123A	2617-97
		DG123B	2617-101
	Siliconix	**G123A**	**★3080**
			2621-100
		G123B	**★3080**
			2621-101
	Telefunken	U123	3234-127
1230	Cermetek	CH1230	3218-29
	MicroPwr	**MP1230B**	**★3046**
			2654-54
		MP1230K	**★3046**
			2655-1
		MP1230T	**★3046**
			2655-2
	National	DAC1230	2651-10
	Sanyo	LA1230	3168-81
1231	MicroPwr	MP1231A	2654-21
		MP1231J	2654-22
		MP1231S	2654-23
			(Continued)

Arranged alphanumerically from left to right.

© IC MASTER 1984

Base Number	Source	Device	Page-Line
1231	National	DAC1231	2654-2
	Sanyo	LA1231N	3168-82
1232	MicroPwr	MP1232H	2654-24
		MP1232R	2654-25
		MP1232Z	2654-26
	National	DAC1232	2655-38
1235	ITT	TDA1235	3171-154
	Sanyo	LA1235	3168-106
1236	ITT	TDA1236	3171-155
124	Fairchild	uA124	3180-45
	Intersil	G124	2621-96
		LM124	3180-48
	Motorola	LM124	3180-50
	National	LM124	3180-53
		LM124A	3210-25
	Raytheon	LM124	3180-57
	RCA	CA124	3180-60
	Signetics	LM124	3180-63
	SiliconG	SG124	3180-66
	TI	LM124	3180-69
1240	**AD**	**HDS-1240E**	**★2830**
			2653-20
		HDS-1240EM	**★2830**
			2653-21
	Sanyo	LA1240	3167-131
12402	Hitachi	HA12402	3167-157
12404	Hitachi	HA12404	3167-152
12405	Hitachi	HA12405	3167-153
12411	Hitachi	HA12411	3168-59
1245	Sanyo	LA1245	3167-132
1248	**Sunrise**	**Z1248**	**★4403**
			4357-6
125	Intersil	D125C	2622-50
		D125M	2622-51
		DG125	2617-98
		DG125B	2617-102
		G125	2621-102
	National	LM125	3228-12
			¶ 314-6
	Siemens	FZH125	601-78
		FZJ125	601-51
	Siliconix	**D125A**	**★3080**
			636-134
	Siliconix	D125A	2622-54
	Siliconix	**D125B**	**★3080**
			636-135
	Siliconix	D125B	2622-55
	Siliconix	**DG125A**	**★3078**
			2617-99
		DG125B	**★3078**
			2617-103
		PWM125	**★3081**
			2622-28
		PWM125A	**★3081**
			3230-116
		PWM125C	**★3081**
			3230-117
	TeledyneC	CDR125A	2622-56
1250	**AD**	**HDS-1250**	**★2830**
			2648-49
		HDS-1250M	**★2830**
			2648-50
	DDC	DDC1250-10-1	2655-52
		DDC1250-10-3	2655-53
		DDC1250-12-1	2653-14
		DDC1250-12-3	2653-15
	ITT	SAA1250	3169-23
	MicroTech	SG1250	4465-43
	Signetics	**SCC1250SH**	**★4870**
	SiliconG	SG1250	3190-57
12500	Motorola	MC12500	637-70
	Motorola	**MC12500Series**	**★820**
12509	Motorola	MC12509	640-91
			3215-56
			3215-60
1251	ITT	SAA1251	3169-24
	NEC	uPC1251	3209-9
12511	Motorola	MC12511	640-98
			3215-63
12513	Motorola	MC12513	640-107
			3215-68
1252	Cermetek	CH1252	3217-141
1253	Cermetek	CH1253	3217-132
	SiliconG	SG1253	3208-25
12540	Motorola	MC12540	3214-55

Base Number	Source	Device	Page-Line
1256	Signetics	SAB1256	641-40
			3214-85
12561	Motorola	MC12561	3214-9
1257	Cermetek	CH1257	3217-142
1258	Cermetek	CH1258	3217-133
1259	Cermetek	CH1259	3217-134
126	Intersil	DG126A	2620-69
		G126	2621-103
	National	LM126	3228-5
	Siliconix	**DG126A**	**★3079**
			2620-72
		DG126B	**★3079**
			2620-84
1260	Sanyo	LB1260	3158-100
12600	Intersil	IGD12600	4461-6
	LSILogic	**LC12600**	**★4762**
			4468-23
1261	Sanyo	LB1261	3158-101
1262	Cermetek	CH1262	3217-143
1263	Cermetek	CH1263	3217-135
1264	Sanyo	LB1264	3158-102
1265	Cermetek	CH1265	3217-144
	National	DAC1265A	2648-5
		DAC1265AC	2648-6
		DAC1265L	2649-36
		DAC1265LC	2649-37
1266	Cermetek	CH1266	3217-145
	National	DAC1266A	2648-3
		DAC1266AC	2648-4
		DAC1266L	2649-34
		DAC1266LC	2649-35
12660	Rockwell	12660	1339-83
1267	Cermetek	CH1267	3217-146
1268	Cermetek	CH1268	3217-136
127	Cherry	CS127	3166-38
			3234-110
	Intersil	G127	2621-104
	Siliconix	**PWM127**	**★3081**
			2622-29
	Siliconix	PWM127	3230-118
	Siliconix	**PWM127A**	**★3081**
			3230-119
		PWM127C	**★3081**
			3230-120
1270	SGS	TDA1270	3172-83
	TI	**TMS1270**	**★1708**
			1339-13
	TI	TMS1270	1265-1
	TI	**TMS1270C**	**★1708**
			1339-7
	TI	TMS1270C	1265-2
1271	Cermetek	CH1271	3217-147
1272	Cermetek	CH1272	3217-148
	ITT	SAA1272	3169-25
	Sanyo	LB1272	3158-1
1273	Cermetek	CH1273	3217-149
	Sanyo	LB1273R	3158-2
1274	ITT	SAA1274	3171-53
	Sanyo	LB1274	3157-136
1275	Fujitsu	C1275	4467-42
	Fujitsu	**C1275H**	**★4639**
			4464-15
	Sanyo	LB1275	3158-95
1276	ITT	SAA1276	3171-54
128	GI	SPR-128	3786-111
	Intersil	G128	2621-105
	Panasonic	MEL128	3234-56
	Reticon	RL128EC	3234-70
		RL128G	3234-71
		RL128L	3234-72
		RL128S	3234-73
		RL128SF	3234-74
		RL128SFX	3234-34
1280	Cermetek	CH1280	3217-150
12806	Rockwell	12806	1339-84
1285	Motorola	TDA1285	3232-3
1287	Sanyo	LB1287	2679-70
			3157-179
1288	Sanyo	LB1288	2679-71
			3157-180
128X128			
	Reticon	RA128X128A	3234-30
128x128			
	Reticon	RA-128x128	3234-61
128x2	Reticon	CCPD128x2	3234-39
128x4	Reticon	CCPD128x4	3234-40

Base Number	Source	Device	Page-Line
128x8	Reticon	CCPD128x8	3234-41
129	Cherry	CS129	3166-39
			3234-115
	Intersil	D129	2622-43
		DG129A	2620-41
		G129	2621-76
	LinearTech	LM129	3237-10
	National	LM129	3237-12
			¶ 314-6
	SGS	L129	3221-56
	Siliconix	**D129A**	**★3080**
			2622-44
		D129B	**★3080**
			2622-45
		DG129A	**★3079**
			2620-44
		DG129B	**★3079**
			2620-58
1290	Cermetek	CH1290	3232-16
1295	Cermetek	CH1295	3216-16
			3232-17
1296	Cermetek	CH1296	3216-17
			3232-18
12H6	**MMI**	**HAL12H6-2C**	**★4776**
			★4782
			★4788
			4484-20
		HAL12H6C	**★4776**
			★4782
			4483-41
		HAL12H6M	**★4776**
			★4782
			4483-111
		PAL12H6-2C	**★4768**
			4481-129
		PAL12H6-2M	**★4768**
			4482-20
		PAL12H6C	**★4768**
			4481-4
		PAL12H6M	**★4768**
			4481-81
	National	DMPAL12H6AC	
			4480-43
		DMPAL12H6AM	
			4480-76
		DMPAL12H6C	4481-20
		DMPAL12H6M	4481-96
	Zytrex	ZX-CAL12H6	4483-89
12L10	**MMI**	**HAL12L10C**	**★4776**
			★4783
			4483-99
		HAL12L10M	**★4776**
			★4783
			4483-112
		PAL12L10C	**★4768**
			4481-45
		PAL12L10M	**★4768**
			4481-46
	National	DMPAL12L10C	
			4481-60
		DMPAL12L10M	
			4481-61
	SI-Fab	**HCT12L10**	**★4827**
			4483-66
12L6	**MMI**	**HAL12L6-2C**	**★4776**
			★4782
			★4788
			4484-21
		HAL12L6C	**★4776**
			★4782
			4483-42
		HAL12L6M	**★4776**
			★4782
			4483-113
		PAL12L6-2C	**★4768**
			4481-130
		PAL12L6-2M	**★4768**
			4482-21
		PAL12L6C	**★4768**
			4481-5
		PAL12L6M	**★4768**
			4481-82
	National	DMPAL12L6AC	
			4480-44
		DMPAL12L6AM	
			4480-77
			(Continued)

Base Number	Source	Device	Page-Line
12L6	National	DMPAL12L6C	4481-21
		DMPAL12L6M	4481-97
	Zytrex	ZX-CAL12L6	4483-90
12L60	**Raytheon**	**CGA12L60**	**★508**
			★4822
			4462-26
			4462-44
12L8	**SI-Fab**	**HCT12L8**	**★4827**
			4483-67
13	Fairchild	13L	4476-20
	Supertex	VC13	2683-29
		VF13	2680-128
	TeledyneC	CAG13	2616-13
130	Cherry	CS130	3166-40
			3234-116
	Intersil	G130	2621-77
		IT130	3157-95
		IT130A	3157-96
	SGS	L130	3223-74
1300	Cherry	1300	4471-28
	Motorola	**MCA1300ALS**	**★4797**
			4462-17
	National	MCA1300ALS	4462-18
	SMOS	SED1300	2661-53
	Signetics	SAA1300	3173-99
	TI	**TMS1300**	**★1708**
			1339-14
	TI	TMS1300	1265-3
	TI	**TMS1300C**	**★1708**
			1339-8
	TI	TMS1300C	1265-4
13001	Motorola	MC13001	3172-106
13002	Motorola	MC13002	3172-107
13006	**National**	**LF13006**	**★3538**
			640-66
	National	LF13006	3233-64
13007	**National**	**LF13007**	**★3538**
			640-67
	National	LF13007	3233-65
1301	National	LM1301	3165-158
13010	**Motorola**	**MC13010**	**3172-108**
13020	Motorola	MC13020	3167-103
1303	National	LM1303	3165-159
1304	**TI**	**TMS1304C**	**★1709**
1305	Interdesign	MOF1305B	2668-62
13080	AnalogSys	LM13080	3199-22
	National	LM13080	3199-21
1309	Motorola	MC1309	3168-130
131	Cherry	CS131	3166-41
	Intersil	G131	2621-78
		IT131	3157-97
	National	LM131	3233-123
		LM131A	3233-124
	SGS	L131	3224-47
	Siemens	FZH131	601-79
		FZJ131	601-46
1310	Exar	XR1310	3168-125
	Motorola	MC1310	3168-131
	National	LM1310	3168-134
	RCA	CA1310A	3168-140
	Supertex	CM1310	3787-42
1319	Hitachi	HA1319	3164-12
132	Cherry	CS132	3166-42
	Intersil	G132	2621-79
		IT132	3157-98
	National	AF132	3217-79
1320	Sanyo	LA1320	3171-180
	Signetics	**ACE1320M**	**★4860**
			4460-8
13201	National	LF13201	2616-80
13202	National	LF13202	2616-81
1321	TeledyneP	1321	3195-61
		1321-01	3195-62
1322	TeledyneP	1322	3176-99
			3201-32
		1322-01	3176-100
			3201-33
1323	TeledyneP	1323	3196-7
1324	**Panasonic**	**AN1324**	**★3556**
1325	Hitachi	HA1325	3164-80
1329	Hitachi	HA1329	3164-81
133	Fairchild	CCD133	3234-48
			3234-93
	Intersil	DG133A	2615-118
		DG133B	2616-10
	National	AF133	3217-80
			(Continued)

¶ Indicates page number in Application Note Directory.
★ Indicates addition data is provided on the page noted.

Base Number	Source	Device	Page-Line
133	National	AF133	¶ 298-10
	Siliconix	**DG133A**	**★3077**
			2615-123
			¶ 291-15
		DG133B	**★3077**
			2616-11
			¶ 291-15
1330	Intersil	G1330	2621-106
1330A1	Motorola	MC1330A1	3172-109
1330A2	Motorola	MC1330A2	3172-110
1331	Siemens	TBB1331A	3203-1
1332	Sanyo	LB1332	3170-172
	TeledyneP	1332	3176-133
			3198-27
13331	National	LF13331	2616-82
13332	National	LF13332	2616-83
13333	National	LF13333	2616-84
1339	**Panasonic**	**AN1339**	**★3557**
134	Fairchild	CCD134	3234-49
			3234-94
	Ferranti	ZNA134E	3170-50
		ZNA134J	3170-51
	Intersil	DG134A	2616-28
		DG134B	2616-45
	National	AF134	3217-81
			¶ 298-10
		LM134	3232-105
			3238-134
	Siliconix	**DG134A**	**★3077**
			2616-32
		DG134B	**★3077**
			2616-46
1340	Intersil	G1340	2621-107
	TeledyneP	1340	3182-62
1341	Motorola	MHW1341	3170-72
	TeledyneP	1341	3201-61
		1341-01	3194-15
1342	Motorola	MHW1342	3170-73
	TeledyneP	1342	3201-60
		1342-01	3194-14
1343	Motorola	MHW1343	3170-74
	TeledyneP	1343	3197-47
		1343-01	3194-13
1344	TeledyneP	1344	3192-9
		1344-01	3192-8
1345	TeledyneP	1345	3201-59
1346	TeledyneP	1346	3192-6
		1346-01	3192-7
1347	TeledyneP	1347	3185-19
		1347-01	3185-20
1349	Motorola	MC1349	3172-111
135	National	LM135	3238-135
	Siemens	FZH135	601-80
		FZJ135	601-47
		SAJ135	641-46
1350	GI	AY3-1350	3173-140
			¶ 302-16
	Intersil	G1350	2621-80
	ITT	SAA1350	3169-26
	Motorola	MC1350	3168-38
			3172-112
			¶ 301-8
			¶ 304-10
			¶ 304-
13508	National	LF13508	2623-92
13509	National	LF13509	2623-9
1351	ITT	SAA1351	3169-27
1352	Motorola	MC1352	3172-113
			¶ 304-10
			¶ 304-
	RCA	CA1352	3172-135
	Sanyo	LA1352	3172-142
1353	Sanyo	LA1353	3172-143
1354	Sanyo	LA1354	3172-144
1357	Motorola	MC1357	3171-156
			¶ 301-8
	Sanyo	LA1357N	3172-145
1358	Motorola	MC1358	3171-157
	Panasonic	**AN1358**	**★3556**
1359	TeledyneP	1359	3202-1
		1359-01	3202-2
136	LinearTech	LM136-2	3236-97
	National	LM136-2	3236-116
			¶ 314-6
		LM136-5	3236-153
			¶ 314-6
			(Continued)

Base Number	Source	Device	Page-Line
136	National	LM136A-2	3236-117
			¶ 314-6
		LM136A-5	3236-154
			¶ 314-6
	TI	TL136C	3212-54
1360	Intersil	G1360	2621-81
13600	Exar	XR13600	3167-58
	National	LM13600	3207-58
	Raytheon	LM13600	3156-10
		LM13600A	3156-11
	Signetics	**LM13600**	**★3636**
			3207-57
		LM13600A	**★3636**
			3205-45
1361	Hitachi	HA1361	3164-13
1363	Sanyo	LA1363	3172-1
1364	Hitachi	HA1364	3171-153
	Sanyo	LA1364	3170-40
1365	Sanyo	LA1365	3172-2
1366	Hitachi	HA1366	3164-136
1368	Hitachi	HA1368	3164-137
	Sanyo	LA1368	3170-169
1369	Sanyo	LA1369	3170-170
137	Cherry	CS137	3166-43
	LinearTech	LM137	3229-84
		LM137HV	3229-118
			3229-122
		LT137A	3229-86
		LT137AHV	3229-120
			3229-124
	MCE	MCELM137	3229-94
	Motorola	**LM137**	**★3532**
			3229-88
		LM137M	**★3532**
			3229-89
	National	LM137	3229-97
			3229-129
			¶ 314-6
		LT137A	3229-100
	SiliconG	SG137	3229-102
	TI	LM137	3229-105
	Unitrode	**UC137**	**★3711**
			3229-108
			3230-3
1370	**TI**	**TMS1370**	**★1708**
			1265-5
13700	National	LM13700	3206-24
		LM13700A	3204-56
1371	Hitachi	HA1371	3164-138
1372	Hitachi	HA1372	3164-139
	Motorola	MC1372	3172-114
			3173-21
			¶ 260-6
			¶ 260-10
			¶ 267-16
1373	Motorola	MC1373	3172-115
			3173-22
1374	Hitachi	HA1374	3165-68
	Motorola	MC1374	3171-123
			¶ 303-8
13741	National	LF13741	3175-41
			3202-20
1376	Motorola	MC1376	3168-112
1377	Hitachi	HA1377	3165-85
	Motorola	MC1377	3170-118
138	LinearTech	LM138	3228-78
		LT138A	3228-80
	Micropac	LML138-15	3224-105
		MLM138-05	3222-19
		MLM138-12	3224-6
	National	LM138	3228-82
1380	NEC	uPC1380	3170-136
1385	Sanyo	LA1385	3172-78
1388	Hitachi	HA1388	3165-22
1389	Hitachi	HA1389	3164-140
139	AMD	LM139	3162-51
		LM139A	3162-20
	Cherry	CS139	3166-63
	Fairchild	uA139	3162-52
		uA139A	3162-21
	Intersil	DG139A	2620-111
		LM139	3162-53
		LM139A	3162-22
	Motorola	LM139	3162-54
		LM139A	3162-23
	National	LM139	3162-55
			(Continued)

Base Number	Source	Device	Page-Line
139	National	LM139A	3162-24
	PMI	PM-139	3162-56
		PM-139A	3162-25
	Raytheon	LM139	3162-57
	RCA	**CA139**	**★3599**
			3162-58
		CA139A	**★3599**
			3162-26
	Signetics	**LM139A**	**★ 526**
			3162-59
	SiliconG	SG139	3162-60
		SG139A	3162-27
	Siliconix	D139A	636-111
			2622-40
		D139B	636-112
			2622-41
		D139C	2622-42
	Siliconix	**DG139A**	**★3079**
			2620-114
		DG139B	**★3079**
			2620-120
	TI	LM139	3162-61
		LM139A	3162-28
1390	Sanyo	LA1390	3170-171
1391	Motorola	MC1391	3171-84
		MHW1391	3170-75
	National	LM1391	3171-86
	RCA	CA1391	3171-94
1392	Hitachi	HA1392	3165-23
	Motorola	MHW1392	3170-76
1393	Motorola	MC1393	3172-68
	Panasonic	**AN1393**	**★3557**
1394	Motorola	MC1394	3171-85
	RCA	CA1394	3171-95
1398	RCA	CA1398	3170-145
1399	Motorola	MC1399	3170-119
14	**Datel**	**DAC-HA14BC**	**★2860**
			2657-41
		DAC-HA14BC-1	**★2860**
			2657-43
		DAC-HA14BM	**★2860**
			2657-42
		DAC-HA14BM-1	**★2860**
			2657-44
	Datricon	ACS14/64	1959-9
	DDC	HRCDX-14	3237-120
		HRCT-14	3237-121
		HRDC-14	3237-123
		HSCDX-14	3237-124
		HSCT-14	3237-125
		HSDC-14	3237-127
		HXCDX-14	3237-137
		HXCT-14	3237-138
		HXDC-14	3237-140
	Lambda	LAS14AU	3228-41
	MicroPwr	**MPOP-14A**	**★3529**
			3204-40
		MPOP-14B	**★3529**
			3207-2
		MPOP-14C	**★3529**
			3205-26
		MPOP-14D	**★3529**
			3207-3
		MPOP-14E	**★3529**
			3204-41
	National	LX14XXA	3236-15
		LX14XXAF	3236-16
		LX14XXAS	3236-17
	PMI	**OP-14**	**★3566**
			3175-5
			¶ 279-5
		OP-14A	**★3566**
			3204-34
			¶ 279-5
		OP-14B	**★3566**
			3207-7
			¶ 279-5
		OP-14C	**★3566**
			3205-31
			¶ 279-5
		OP-14D	**★3566**
			3206-59
			¶ 279-5
		OP-14E	**★3566**
			3204-35
			¶ 279-5
			(Continued)

Base Number	Source	Device	Page-Line
14	TeledyneC	CAG14	2615-17
	Wintek	MCC14	1959-27
140	Cherry	CS140	3173-44
			3234-154
	Intersil	DG140A	2620-20
	Motorola	**LM140-12**	**★3531**
			3223-90
		LM140-15	**★3531**
			3224-63
		LM140-18	**★3531**
			3225-7
		LM140-24	**★3531**
			3225-93
		LM140-5	**★3531**
			3221-85
		LM140-6	**★3531**
			3222-50
		LM140-8	**★3531**
			3222-117
	National	LM140-12	3223-96
		LM140-15	3224-69
		LM140-5	3221-91
		LM140A-12	3223-97
		LM140A-15	3224-70
		LM140A-5	3221-92
		LM140LA-12	3223-48
		LM140LA-15	3224-22
		LM140LA-5	3221-10
	SiliconG	SG140-05K	3221-97
		SG140-05R	3221-98
		SG140-05T	3221-49
		SG140-06K	3222-56
		SG140-06R	3222-57
		SG140-06T	3222-35
		SG140-08K	3222-123
		SG140-08R	3222-124
		SG140-08T	3222-104
		SG140-12K	3223-103
		SG140-12R	3223-104
		SG140-12T	3223-66
		SG140-15K	3224-74
		SG140-15R	3224-75
		SG140-15T	3224-40
		SG140-18K	3225-13
		SG140-18R	3225-14
		SG140-18T	3224-120
		SG140-20K	3225-48
		SG140-20R	3225-49
		SG140-20T	3225-39
		SG140-24K	3225-99
		SG140-24R	3225-100
		SG140-24T	3225-73
	Siliconix	**DG140A**	**★3079**
			2620-23
		DG140B	**★3079**
			2620-29
1400	Cherry	CML1400	4473-23
		CS1400	4473-24
	GI	ER1400	3758-26
			¶ 301-11
			¶ 317-14
			¶ 318-3
	Inmos	**IMS1400-10L**	**★3977**
			3782-70
		IMS1400-35	**★3977**
			3782-14
		IMS1400-45	**★3977**
			3782-22
		IMS1400-55	**★3977**
			3782-33
		IMS1400-55M	**★3977**
			3782-34
		IMS1400-70L	**★3977**
			3782-48
		IMS1400-70M	**★3977**
			3782-49
		IMS1400L	**★3977**
			3782-50
	Motorola	**MC1400-10**	**★3534**
			3237-71
		MC1400-2	**★3534**
			3236-108
		MC1400-5	**★3534**
			3236-147
		MC1400-6	**★3534**
			3237-4
			(Continued)

Arranged alphanumerically from left to right.

© IC MASTER 1984

Base Number	Source	Device	Page-Line
1400	**Motorola**	**MC1400A-10**	★ **3534**
			3237-72
		MC1400A-2	★ **3534**
			3236-109
		MC1400A-5	★ **3534**
			3236-148
		MC1400A-6	★ **3534**
			3237-5
	NCR	NCR1400	3758-25
			3758-27
	Panasonic	**MN1400**	★ **1587**
			1337-108
			¶ 274-7
	Panasonic	MN1400	1261-16
	Signetics	**ACE1400**	★ **4860**
			4460-9
	TI	SE1400P	1339-24
			1339-31
			1263-16
	TI	**TMS1400**	★ **1708**
			1265-6
	Toshiba	T1400	3167-154
14000	**Motorola**	**MC14000Series**	★ **820**
	Motorola	MC14000UBA	584-120
		MC14000UBC	584-121
14001	Hitachi	HD14001B	585-33
	Motorola	MC14001BA	585-34
		MC14001BC	585-35
		MC14001UBA	585-36
		MC14001UBC	585-37
14002	Hitachi	HD14002B	584-141
	Motorola	MC14002BA	584-142
		MC14002BC	584-143
		MC14002UBA	584-144
		MC14002UBC	584-145
14006	Hitachi	HD14006B	591-163
	Motorola	MC14006BA	591-164
			3789-106
		MC14006BC	591-165
			3789-105
14007	Hitachi	HD14007UB	573-146
	Mostek	**MK14007**	**1348-91**
	Motorola	MC14007UBA	573-147
		MC14007UBC	573-148
14008	Hitachi	HD14008B	571-35
	Motorola	MC14008BA	571-36
		MC14008BC	571-37
14009	Hitachi	HD14009B	572-73
1401	SiliconG	SG1401	3156-117
14010	Hitachi	HD14010B	572-118
14011	Hitachi	HD14011B	583-71
	Motorola	MC14011BA	583-72
		MC14011BC	583-73
		MC14011UBA	583-74
		MC14011UBC	583-75
14012	Hitachi	HD14012B	582-172
	Motorola	MC14012BA	582-173
		MC14012BC	582-174
		MC14012UBA	582-175
		MC14012UBC	582-176
14013	Hitachi	HD14013B	580-45
	Motorola	MC14013BA	580-46
			¶ 303-1
		MC14013BC	580-47
			¶ 303-1
14014	Hitachi	HD14014B	591-126
	Motorola	MC14014BA	591-127
			3790-67
		MC14014BC	591-128
14015	Hitachi	HD14015B	590-51
			3789-71
	Motorola	MC14015BA	590-52
			3789-79
		MC14015BC	590-53
			3789-72
14016	Hitachi	HD14016B	2617-48
	Motorola	MC14016BA	2617-49
		MC14016BC	2617-50
14017	Hitachi	HD14017B	576-17
	Motorola	MC14017BA	576-18
		MC14017BC	576-19
14018	Hitachi	HD14018B	577-141
	Motorola	MC14018BA	577-142
		MC14018BC	577-143
1402	AMD	AM1402AC	3788-5
		AM1402AM	3788-6
			(Continued)

Base Number	Source	Device	Page-Line
1402	**Panasonic**	**MN1402**	★ **1587**
			1337-109
			¶ 274-7
	Panasonic	MN1402	1261-17
	SiliconG	SG1402	3235-42
			¶ 309-10
	Western	TR1402	2686-49
14020	Hitachi	HD14020B	575-127
	Motorola	MC14020BA	575-128
		MC14020BC	575-129
14021	Hitachi	HD14021B	591-13
			3790-55
	Motorola	MC14021BA	591-14
			3790-68
		MC14021BC	591-15
			3790-56
14022	Hitachi	HD14022B	578-16
	Motorola	MC14022BA	577-113
		MC14022BC	577-114
14023	Hitachi	HD14023B	583-19
	Motorola	MC14023BA	583-20
		MC14023BC	583-21
		MC14023UBA	583-22
		MC14023UBC	583-23
14024	Hitachi	HD14024B	575-50
	Motorola	MC14024BA	575-51
		MC14024BC	575-52
14025	Hitachi	HD14025B	584-182
	Motorola	MC14025BA	584-183
		MC14025BC	584-184
		MC14025UBA	584-185
		MC14025UBC	584-186
14027	Hitachi	HD14027B	582-12
	Motorola	MC14027BA	582-13
		MC14027BC	582-14
14028	Hitachi	HD14028B	578-29
	Motorola	MC14028BA	578-30
		MC14028BC	578-31
14029	Motorola	MC14029BA	577-161
		MC14029BC	577-162
1403	AMD	**AM1403AC**	3788-15
		AM1403AM	3788-16
	AD	**AD1403**	★ **2842**
			3236-88
		AD1403A	★ **2842**
			3236-89
	Motorola	**MC1403**	★ **3535**
			3236-110
		MC1403A	★ **3535**
			3236-111
	Panasonic	**MN1403**	★ **1587**
			1337-110
	Panasonic	MN1403	1261-18
14032	Hitachi	HD14032B	571-17
	Motorola	MC14032BA	571-18
		MC14032BC	571-19
14034	Hitachi	HD14034B	591-34
			3790-22
	Motorola	MC14034BA	591-35
			3790-23
		MC14034BC	591-36
			3790-15
14035	Hitachi	HD14035B	590-151
			3789-38
	Motorola	MC14035BA	590-152
			3789-49
		MC14035BC	590-153
			3789-39
14038	Hitachi	HD14038B	571-5
	Motorola	MC14038BA	571-6
		MC14038BC	571-7
1404	AMD	AM1404AC	3788-23
		AM1404AM	3788-24
	Micrel	**MIC1404**	★ **4765**
	Motorola	**MC1404-10**	★ **3535**
			3237-73
		MC1404-5	★ **3535**
			3236-149
		MC1404-6	★ **3535**
			3237-6
		MC1404A-10	★ **3535**
			3237-74
	Panasonic	**MN1404**	★ **1587**
			1337-111
	Panasonic	MN1404	1261-19

Base Number	Source	Device	Page-Line
14040	Hitachi	HD14040B	575-90
	Motorola	MC14040BA	575-91
			¶ 303-1
		MC14040BC	575-92
			¶ 303-1
14042	Hitachi	HD14042B	586-49
	Motorola	MC14042BA	586-50
		MC14042BC	586-51
14043	Hitachi	HD14043B	586-105
	Motorola	MC14043BA	586-106
		MC14043BC	586-107
14044	Hitachi	HD14044B	586-84
	Motorola	MC14044BA	586-85
		MC14044BC	586-86
14046	Hitachi	HD14046B	592-87
	Motorola	MC14046BA	592-88
			3214-36
		MC14046BC	592-89
			3214-37
14049	Hitachi	HD14049UB	572-89
	Motorola	MC14049UBA	572-90
		MC14049UBC	572-91
1405	AMD	AM1405A	3788-10
	Lambda	LAS1405	3221-123
		LAS1405B	3221-124
	Motorola	MC1405	2637-38
	Panasonic	**MN1405**	★ **1587**
			1337-112
	Panasonic	MN1405	1261-20
	Sanyo	LB1405	2661-5
			3234-120
14050	Hitachi	HD14050B	572-133
	Motorola	MC14050BA	572-134
		MC14050BC	572-135
14051	Hitachi	HD14051B	2623-32
	Motorola	MC14051BA	2623-33
		MC14051BC	2623-34
14052	Hitachi	HD14052B	2622-77
	Motorola	MC14052BA	2622-78
		MC14052BC	2622-79
14053	Hitachi	HD14053B	2619-56
	Motorola	MC14053BA	2619-57
		MC14053BC	2619-58
1406	AMD	AM1406	3788-1
	Hitachi	HA1406	3165-118
	Lambda	LAS1406	3222-72
	Motorola	**MC1406**	★ **3069**
			2638-28
14060	Motorola	MC14060B	575-158
14066	Hitachi	HD14066B	2617-26
	Motorola	MC14066BA	2617-27
		MC14066BC	2617-28
14067	Motorola	MC14067BA	589-10
			2624-45
		MC14067BC	589-11
			2624-46
14068	Hitachi	HD14068B	583-131
	Motorola	MC14068BA	583-132
		MC14068BC	583-133
14069	Hitachi	HD14069B	573-186
	Motorola	MC14069UBA	573-187
		MC14069UBC	573-188
1407	AMD	AM1407	3788-2
14070	Hitachi	HD14070B	585-117
	Motorola	MC14070BA	585-118
		MC14070BC	585-119
14071	Hitachi	HD14071B	584-81
	Motorola	MC14071BA	584-82
		MC14071BC	584-83
14072	Hitachi	HD14072B	584-31
	Motorola	MC14072BA	584-32
		MC14072BC	584-33
14073	Hitachi	HD14073B	582-83
	Motorola	MC14073BA	582-84
		MC14073BC	582-85
14075	Hitachi	HD14075B	584-48
	Motorola	MC14075BA	584-49
		MC14075BC	584-50
14076	Hitachi	HD14076B	580-93
	Motorola	MC14076BA	580-94
		MC14076BC	580-95
14077	Hitachi	HD14077B	585-171
	Motorola	MC14077BA	585-172
		MC14077BC	585-173

Base Number	Source	Device	Page-Line
14078	Hitachi	HD14078B	585-88
	Motorola	MC14078BA	585-89
		MC14078BC	585-90
1408	AMD	AM1408-6	2642-47
		AM1408-7	2642-39
		AM1408-8	2641-16
		SSS1408A-7	2642-35
		SSS1408A-8	2641-8
	AD	**AD1408-7**	★ **2825**
			2642-36
		AD1408-8	★ **2825**
			2641-10
		AD1408-9	★ **2825**
			2639-46
	Fairchild	DAC1408	2641-20
		DAC1408A	2641-21
		DAC1408B	2642-37
		DAC1408C	2642-45
	Motorola	**MC1408-6**	★ **3069**
			2642-48
			¶ 280-10
			¶ 284-10
		MC1408-7	★ **3069**
			2642-40
			¶ 280-10
			¶ 284-10
		MC1408-8	★ **3069**
			2641-22
			¶ 280-10
			¶ 284-10
	National	MC1408-6	2642-50
		MC1408-7	2642-42
		MC1408-8	2641-24
	PMI	DAC-1408A-6	2642-46
		DAC-1408A-7	2642-38
		DAC-1408A-8	2641-12
	Signetics	MC1408-7	2642-24
		MC1408-8	2641-26
14081	Hitachi	HD14081B	582-121
	Motorola	MC14081BA	582-122
		MC14081BC	582-123
14082	Hitachi	HD14082B	582-66
	Motorola	MC14082BA	582-67
		MC14082BC	582-68
1409	**AD**	**HAS-1409**	★ **2837**
			2635-50
		HDD-1409	★ **2823**
			2657-40
	Sanyo	LB1409	2661-6
14093	Hitachi	HD14093B	593-88
	Motorola	MC14093BA	593-89
		MC14093BC	593-90
14094	Hitachi	HD14094B	591-50
	Motorola	MC14094BA	591-51
			3790-127
		MC14094BC	591-52
			3790-128
14097	Motorola	MC14097BA	589-67
			2623-113
		MC14097BC	589-68
			2623-114
14099	Hitachi	HD14099B	587-48
	Motorola	MC14099BA	587-49
		MC14099BC	587-50
141	Intersil	DG141A	2615-90
		DG141B	2615-103
	NEC	uPC141	3228-50
	Siemens	FZH141	601-81
		FZJ141A	601-24
		SAJ141	640-69
	Siliconix	**DG141A**	★ **3077**
			2615-94
		DG141B	★ **3077**
			2615-105
1410	SGS	TDA1410	3157-35
1411	**Motorola**	**MC1411**	★ **3064**
			2679-123
	Motorola	MC1411	3158-32
1412	Fujitsu	MB1412A	637-1
			2665-63
	Lambda	LAS1412	3223-127
		LAS1412B	3223-128
	Motorola	**MC1412**	★ **3064**
			2679-143
	Motorola	MC1412	3158-33

¶ Indicates page number in Application Note Directory.
★ Indicates addition data is provided on the page noted.

Base Number	Source	Device	Page-Line
1413	**Motorola**	**MC1413**	★3064
			2679-95
	Motorola	MC1413	3158-34
1414	Motorola	MC1414	3161-29
			¶ 300-5
	National	LM1414	3161-28
1415	Lambda	LAS1415	3224-94
		LAS1415B	3224-95
	Sanyo	LB1415	2661-7
1416	**Motorola**	**MC1416**	★3064
			2679-77
	Motorola	MC1416	3158-35
	Sanyo	LB1416	2661-8
14160	Hitachi	HD14160	576-98
	Motorola	MC14160BA	576-99
		MC14160BC	576-100
14161	Hitachi	HD14161B	574-81
	Motorola	MC14161BA	574-82
		MC14161BC	574-83
14162	Hitachi	HD14162B	576-58
	Motorola	MC14162BA	576-59
		MC14162BC	576-60
14163	Hitachi	HD14163B	574-46
	Motorola	MC14163BA	574-47
		MC14163BC	574-48
14174	Hitachi	HD14174B	580-157
	Motorola	MC14174BA	580-158
		MC14174BC	580-159
14175	Hitachi	HD14175B	580-129
	Motorola	MC14175BA	580-130
		MC14175BC	580-131
1419	Sanyo	LB1419	2661-9
14194	Hitachi	HD14194B	590-97
	Motorola	MC14194BA	590-98
			3789-54
		MC14194BC	590-99
142	Fairchild	CCD142	3234-50
			3234-99
	Intersil	DG142A	2620-122
	NEC	uPC142	3229-74
	SGS	M142	3791-63
		M142A	3791-64
	Siliconix	**DG142A**	★3079
			2621-3
		DG142B	★3079
			2621-7
1420	Inmos	IAMS1420-70L	
			3781-64
	Inmos	**IMS1420-10L**	★ 501
			★3978
			3781-95
		IMS1420-45	★ 501
			★3978
			3781-20
		IMS1420-55	★ 501
			★3978
			3781-40
		IMS1420-55M	★ 501
			★3978
			3781-41
		IMS1420-70M	★ 501
			★3978
			3781-65
		IMS1420L	★ 501
			★3978
			3781-66
	SGS	TDA1420	3157-36
1421	Inmos	IMS1421-40	3781-4
		IMS1421-50	3781-21
	TeledyneP	1421	3202-5
		1421-01	3202-4
		1421-02	3202-3
142100	**Motorola**	**MC142100**	★3536
			2622-58
	Motorola	MC142100	3216-137
1422	Motorola	MC1422	3220-1
1424	Intersil	ICM1424B	3167-15
		ICM1424MB	3167-16
		ICM1424MC	3167-17
	TeledyneP	1424	3203-18
1425	TeledyneP	1425	3189-17
		1425-01	3187-41
		1425-02	3187-40
1426	Sanyo	LB1426	2661-10
	TeledyneP	1426	3189-20
		1426-01	3187-43
			(Continued)

Base Number	Source	Device	Page-Line
1426	TeledyneP	1426-02	3187-51
		1426-03	3187-50
143	Fairchild	CCD143	3234-51
			3234-100
	Harris	LM143	3176-125
	Intersil	DG143	2618-66
	National	LM143	3176-129
	Siliconix	**DG143A**	★3078
			2618-69
		DG143B	★3078
			2618-80
	Telefunken	U143	2661-83
			3170-95
1430	**Panasonic**	**MN1430**	★1587
			1337-113
	Panasonic	MN1430	1261-21
	Plessey	SL1430	3172-131
	TeledyneP	1430	3176-14
			3176-68
			3180-118
			3190-24
		1430-83	3176-69
			3180-119
			3190-25
1431	Plessey	SL1431	3172-132
1432	**Panasonic**	**MN1432**	★1587
			1337-114
	Panasonic	MN1432	1261-22
	Plessey	SL1432	3172-133
1433	TeledyneS	TSC1433A	2637-13
1435	**Datel**	**AM-1435**	★2861
	Panasonic	**MN1435**	★1587
			1337-115
	Panasonic	MN1435	1261-23
	TeledyneP	1435	3176-84
			3180-161
			3197-41
1436	Motorola	MC1436	3176-135
			3201-8
		MC1436C	3176-146
			3201-53
	National	LM1436	3176-147
			3201-56
	Sanyo	LB1436	2661-11
	SiliconG	SG1436	3176-137
			3201-9
		SG1436C	3176-149
			3201-54
1437	HyComp	HC1437	3190-22
		HC1437-883	3190-23
	Motorola	MC1437	3209-17
	Raytheon	RC1437	3209-18
	TeledyneP	1437	3188-32
		1437-80	3188-33
1438	Motorola	MC1438	3155-19
	TeledyneP	1438	3190-17
		1438-83	3190-18
1439	Motorola	MC1439	3199-58
144	Intersil	DG144A	2618-36
		DG144B	2618-54
	National	LM144	3176-130
			3195-38
	Siliconix	**DG144A**	★3078
			2618-39
		DG144B	★3078
			2618-55
		L144A	★3083
			3208-28
			¶ 294-17
		L144B	★3083
			3208-29
			¶ 294-17
		L144C	★3083
			3208-30
			¶ 294-17
1440	Siemens	TBA1440G	3172-149
14400	**Motorola**	**MC14400**	★3536
			3217-71
		MC14400Series	★ 820
14401	**Motorola**	**MC14401**	★3536
			3217-72
14402	**Motorola**	**MC14402**	★3536
			3217-73
14403	**Motorola**	**MC14403**	★3536
			3216-74
			3217-74

Base Number	Source	Device	Page-Line
14404	Motorola	MC14404	3216-101
14405	**Motorola**	**MC14405**	★3536
			3216-75
			3217-75
14406	Motorola	MC14406	3216-115
14407	**Motorola**	**MC14407**	★3536
			3216-102
14408	**Motorola**	**MC14408**	★3536
			593-12
	Motorola	MC14408	3217-48
14409	**Motorola**	**MC14409**	★3536
			593-13
	Motorola	MC14409	3217-8
1441	Siemens	TBA1441	3172-150
14410	**Motorola**	**MC14410**	★3536
			3219-80
14411	**Motorola**	**MC14411**	★3536
			592-47
	Motorola	MC14411	2685-39
14412	**Exar**	**XR14412F**	★3369
			3218-30
		XR14412V	★3369
			3218-31
	Motorola	**MC14412**	★3536
			592-80
	Motorola	MC14412	3218-32
14413	**Motorola**	**MC14413-1**	★3536
			3217-93
		MC14413-2	★3536
			3217-94
14414	**Motorola**	**MC14414-1**	★3536
			3217-95
		MC14414-2	★3536
			3217-96
14415	Motorola	MC14415	593-80
		MC14415E	593-81
14416	**Motorola**	**MC14416**	★3536
			3218-116
14417	**Motorola**	**MC14417**	★3536
			3218-117
14418	**Motorola**	**MC14418**	★3536
			3218-118
14419	**Motorola**	**MC14419**	★3536
			594-182
			¶ 320-11
	Motorola	MC14419	2667-5
			3217-67
1443	TeledyneP	1443	3192-22
		1443-83	3189-19
14433	Motorola	MC14433	2637-10
			¶ 261-4
			¶ 280-9
	TeledyneS	TSC14433	2637-14
		TSC14433B	2637-15
14435	Motorola	MC14435	592-62
			2637-39
		MC14435E	592-63
			2637-40
1444	Motorola	MC1444	2684-72
14443	Motorola	MC14443	2628-39
14444	Motorola	MC14444	2628-37
14447	Motorola	MC14447	2628-40
1445	Motorola	MC1445	3156-43
	TI	MC1445	3156-45
14457	Motorola	MC14457	3169-28
		MCC14457	592-125
14458	Motorola	MC14458	3169-29
		MCC14458	592-126
1446	Plessey	MJ1446	3218-114
14460	Motorola	MC14460	3166-15
14466	Motorola	MC14466	3173-89
14467	Motorola	MC14467	3173-90
14469	Motorola	MC14469	592-38
			¶ 286-15
			2685-19
14490	Motorola	MC14490	593-118
		MC14490E	593-119
14495	Motorola	MC14495	579-169
			2661-78
145	Fairchild	CCD145	3234-52
			3234-101
	Intersil	DG145A	2620-98
	Siemens	FZH145	601-82
		FZJ145A	601-25
	Siliconix	**DG145A**	★3079
			2620-101
			(Continued)

Base Number	Source	Device	Page-Line
145	**Siliconix**	**DG145B**	★3079
			2620-107
	Telefunken	UAA145	3238-80
1450	**Panasonic**	**MN1450**	★1588
			1337-101
	Panasonic	MN1450	1261-24
	Plessey	SP1450B	3218-43
	Sanyo	LB1450	3168-109
14500	Intersil	IGD14500	4461-7
	Motorola	MC14500B	592-37
			1337-94
145000	Motorola	MC145000	2661-71
145001	Motorola	MC145001	2661-72
14501	Hitachi	HD14501UB	586-1
	Motorola	MC14501UBA	586-2
		MC14501UBC	586-3
14502	Hitachi	HD14502B	572-59
	Motorola	MC14502BA	572-60
		MC14502BC	572-61
145026	Motorola	MC145026	3169-30
145027	Motorola	MC145027	3169-31
145028	Motorola	MC145028	3169-32
14503	Hitachi	HD14503B	573-39
	Motorola	MC14503BA	573-40
		MC14503BC	573-41
14504	Motorola	MC14504BA	592-33
		MC14504BC	592-34
14505	Hitachi	HD14505B	587-137
			3771-82
	Motorola	MCM14505A	587-138
			3771-80
		MCM14505C	587-139
			3771-83
14506	Hitachi	HD14506B	583-196
	Motorola	MC14506BA	583-197
		MC14506BC	583-198
14508	Hitachi	HD14508B	586-25
	Motorola	MC14508BA	586-26
		MC14508BC	586-27
1451	GI	ER1451	3758-12
			3758-28
14510	Hitachi	HD14510B	576-137
	DDC	SDC-14510	3237-141
	Motorola	MC14510BA	576-139
		MC14510BC	576-140
145100	**Motorola**	**MC145100**	★3536
			2622-59
	Motorola	MC145100	3216-138
145104	Motorola	MC145104	3214-96
145106	Motorola	MC145106	3214-97
145107	Motorola	MC145107	3214-98
145109	Motorola	MC145109	3214-99
14511	Hitachi	HD14511B	579-174
			2662-43
	Motorola	MC14511BA	579-175
			¶ 288-12
			2662-44
		MC14511BC	579-176
			¶ 288-12
			2662-45
145112	Motorola	MC145112	3214-100
14512	Hitachi	HD14512B	588-186
	Motorola	MC14512A	588-187
		MC14512C	588-188
14513	Motorola	MC14513BA	579-177
			2662-46
		MC14513BC	579-178
			2662-47
14514	Hitachi	HD14514B	579-22
	Motorola	MC14514BA	579-24
		MC14514BC	579-25
145143	Motorola	MC145143	3214-101
145144	Motorola	MC145144	3214-102
145145	Motorola	MC145145	3214-103
145146	Motorola	MC145146	3214-104
14515	Hitachi	HD14515B	579-23
	Motorola	MC14515BA	579-26
		MC14515BC	579-27
145151	Motorola	MC145151	3214-105
145152	Motorola	MC145152	3214-106
145155	Motorola	MC145155	3214-107
145156	Motorola	MC145156	3214-108
145157	Motorola	MC145157	3214-109
145158	Motorola	MC145158	3214-110
145159	Motorola	MC145159	3214-111

Arranged alphanumerically from left to right.

© IC MASTER 1984

Base Number	Source	Device	Page-Line
14516	Hitachi	HD14516B	574-125
	Motorola	MC14516BA	574-126
		MC14516BC	574-127
14517	Hitachi	HD14517B	590-80
	Motorola	MC14517BA	590-81
			3791-54
		MC14517BC	590-82
			3791-51
14518	Hitachi	HD14518B	577-21
	Motorola	MC14518BA	577-22
		MC14518BC	577-23
14519	Hitachi	HD14519B	583-174
			588-155
	Motorola	MC14519BA	588-156
		MC14519BC	588-157
1452	Hitachi	HA1452W	3165-157
14520	Hitachi	HD14520B	575-3
	DDC	SDC-14520	3237-142
	Motorola	MC14520BA	575-4
		MC14520BC	575-5
14521	Hitachi	HD14521B	590-40
	Motorola	MC14521BA	590-41
		MC14521BC	590-42
14522	Hitachi	HD14522B	576-195
	Motorola	MC14522BA	576-196
		MC14522BC	576-197
14524	Hitachi	HD14524B	588-41
			3783-2
	Motorola	**MCM14524A**	**★4048**
			588-42
	Motorola	MCM14524A	3783-3
	Motorola	**MCM14524C**	**★4048**
			588-43
	Motorola	MCM14524C	3783-4
14526	Hitachi	HD14526B	574-181
	Motorola	MC14526BA	574-182
		MC14526BC	574-183
14527	Hitachi	HD14527B	593-14
	Motorola	MC14527BA	593-15
		MC14527BC	593-16
14528	Hitachi	HD14528B	589-94
	Motorola	MC14528BA	589-95
		MC14528BC	589-96
14529	Motorola	MC14529BA	2622-71
			2623-17
		MC14529BC	2622-72
			2623-18
1453	**Panasonic**	**MN1453**	**★1588**
			1337-102
	Panasonic	MN1453	1261-25
14530	Hitachi	HD14530B	585-192
	Motorola	MC14530BA	585-193
		MC14530BC	585-194
14531	Hitachi	HD14531B	595-27
	Motorola	MC14531BA	595-28
		MC14531BC	595-29
14532	Hitachi	HD14532B	595-5
	Motorola	MC14532BA	595-6
		MC14532BC	595-7
14534	Hitachi	HD14534B	577-106
	Motorola	MC14534BA	577-107
			¶ 254-5
		MC14534BC	577-108
			¶ 254-5
14536	Hitachi	HD14536B	590-4
	Motorola	MC14536BA	590-5
		MC14536BC	590-6
14537	Hitachi	HD14537	587-147
		HD14537B	3772-4
	Motorola	MCM14537A	587-148
			3772-3
		MCM14537C	587-149
			3772-5
14538	Hitachi	HD14538B	589-123
	Motorola	MC14538BA	589-124
		MC14538BC	589-125
14539	Hitachi	HD14539B	588-53
	Motorola	MC14539BA	588-54
		MC14539BC	588-55
1454	Motorola	MC1454	3164-82
	Panasonic	**MN1454**	**★1588**
			1337-103
	Panasonic	MN1454	1261-26
14541	Hitachi	HD14541B	589-176
	Motorola	MC14541BA	589-177
			3220-27
			(Continued)

Base Number	Source	Device	Page-Line
14541	Motorola	MC14541BC	589-178
			3220-28
145414	**Motorola**	**MC145414**	**★3536**
			3217-104
145415	**Motorola**	**MC145415**	**★3536**
			3217-108
145420	Motorola	MC145420	3219-42
145422	**Motorola**	**MC145422**	**★3536**
			2686-86
	Motorola	MC145422	3219-44
145423	Motorola	MC145423	2686-87
			3219-45
145425	Motorola	MC145425	3219-43
145426	**Motorola**	**MC145426**	**★3536**
			2686-88
	Motorola	MC145426	3219-46
145428	**Motorola**	**MC145428**	**★3536**
145429	**Motorola**	**MC145429**	**★3536**
14543	Hitachi	HD14543B	579-130
	Motorola	MC14543BA	579-131
			¶ 288-12
			2662-63
		MC14543BC	579-132
			¶ 288-12
			2662-64
145431	Motorola	MC145431	3217-105
145432	**Motorola**	**MC145432**	**★3536**
145433	**Motorola**	**MC145433**	**★3536**
			3217-106
145434	Motorola	MC145434	3217-107
14544	Motorola	MC14544BA	2662-60
		MC14544BC	2662-61
145440	**Motorola**	**MC145440**	**★3536**
			3217-126
			3218-8
145441	**Motorola**	**MC145441**	**★3536**
			3217-127
			3218-9
145445	**Motorola**	**MC145445**	**★3536**
			3217-152
145450	**Motorola**	**MC145450**	**★3536**
			3217-153
14547	Motorola	MC14547BA	578-67
			2661-84
		MC14547BC	578-68
			2661-85
14549	Hitachi	HD14549B	592-134
	Motorola	MC14549BA	592-135
		MC14549BC	592-136
1455	Motorola	MC1455	3220-37
		MC1455BC	3791-45
	Panasonic	**MN1455**	**★1588**
			1337-104
	Panasonic	MN1455	1261-27
	Plessey	SP1455B	3218-44
14551	Motorola	MC14551BA	2619-82
		MC14551BC	2619-83
14552	Hitachi	HD14552B	587-164
			3771-71
	Motorola	MCM14552A	587-165
			3771-70
		MCM14552C	587-166
			3771-72
14553	Hitachi	HD14553B	577-67
	Motorola	MC14553BA	577-68
		MC14553BC	577-69
14554	Motorola	MC14554BA	571-152
		MC14554BC	571-153
14555	Hitachi	HD14555B	578-77
	Motorola	MC14555BA	578-78
		MC14555BC	578-79
14556	Motorola	MC14556BA	578-91
		MC14556BC	578-92
	RCA	HIT	578-96
14557	Hitachi	HD14557B	592-16
	Motorola	MC14557BA	592-17
			3791-49
		MC14557BC	592-18
14558	Hitachi	HD14558B	578-69
	Motorola	MC14558BA	578-70
		MC14558BC	578-71
14559	Hitachi	HD14559B	592-129
	Motorola	MC14559BA	592-130
			¶ 284-10
		MC14559BC	592-131
			¶ 284-10

Base Number	Source	Device	Page-Line
1456	Motorola	MC1456	3201-7
		MC1456C	3201-55
14560	Hitachi	HD14560B	571-1
	Motorola	MC14560BA	571-2
			¶ 250-10
		MC14560BC	571-3
			¶ 250-10
14561	Hitachi	HD14561B	572-6
	Motorola	MC14561BA	572-7
			¶ 250-10
		MC14561BC	572-8
			¶ 250-10
14562	Motorola	MC14562BA	592-23
			3791-36
		MC14562BC	592-24
			3791-35
14566	Hitachi	HD14566B	577-131
	Motorola	MC14566BA	577-132
		MC14566BC	577-133
14568	Hitachi	HD14568B	577-136
	Motorola	MC14568BA	577-137
			3214-23
		MC14568BC	577-138
			3214-24
14569	Hitachi	HD14569B	578-17
	Motorola	MC14569BC	578-18
1457	Hitachi	HA1457	3165-119
14572	Hitachi	HD14572UB	586-5
	Motorola	MC14572A	586-6
			¶ 303-1
		MC14572C	586-7
			¶ 303-1
14573	Motorola	MC14573	592-54
			3213-47
14574	Motorola	MC14574	592-53
			3163-44
14575	Motorola	MC14575	592-55
			3162-16
			3162-17
1458	Exar	XR1458	3175-1
			3208-32
	Fairchild	uA1458	3175-2
		uA1458C	3208-33
	Motorola	MC1458	3175-3
			3208-35
		MC1458C	3209-31
		MC1458N	3209-1
		MC1458S	3209-2
	National	LM1458	3175-4
			3208-37
	Panasonic	**AN1458**	**★3556**
	Raytheon	RC1458	3175-6
	RCA	CA1458	3175-7
	Siemens	TBB1458	3208-27
	Signetics	SA1458	3209-3
	SiliconG	MC1458	3175-12
		SG1458	3175-13
	TI	MC1458	3175-14
14580	Hitachi	HD14580B	587-97
	Motorola	MC14580BA	587-98
			3770-21
		MC14580BC	587-99
			3770-22
14581	Hitachi	HD14581B	571-76
	Motorola	MC14581BA	571-77
		MC14581BC	571-78
14582	Hitachi	HD14582B	571-90
	Motorola	MC14582BA	571-91
		MC14582BC	571-92
14583	Hitachi	HD14583B	593-32
	Motorola	MC14583BA	593-33
		MC14583BC	593-34
14584	Hitachi	HD14584B	593-124
	Motorola	MC14584BA	593-125
		MC14584BC	593-126
14585	Hitachi	HD14585B	571-106
	Motorola	MC14585BA	571-107
		MC14585BC	571-108
1458705F5			
	Motorola	MC1458705F5	1273-25
14597	Motorola	MC14597BA	587-84
			1337-95
		MC14597BC	587-85
			1337-96
14598	Motorola	MC14598BA	587-42
			1337-97
			(Continued)

Base Number	Source	Device	Page-Line
14598	Motorola	MC14598BC	587-43
			1337-98
14599	Motorola	MC14599BA	587-40
			1337-99
		MC14599BC	587-41
			1337-100
145K5	National	LM145K5	3226-54
			3226-75
146	**Exar**	**XR146**	**★3377**
			3196-24
	Intersil	DG146A	2618-15
		DG146B	2618-23
	National	LM146	3210-10
	Raytheon	LM146	3210-13
	SGS	L146	3229-64
	Siliconix	**DG146A**	**★3078**
			2618-18
		DG146B	**★3078**
			2618-25
	Telefunken	UAA146	3238-81
1460	TeledyneP	1460	3197-24
1461	TeledyneP	1461	3175-86
		1461-83	3186-9
1463	**Motorola**	**MC1463G**	**★3532**
			3229-80
		MC1463R	**★3532**
			3229-83
	Sanyo	LA1463	3172-79
1464	Sanyo	LA1464	3172-80
1466	Motorola	MC1466	3229-67
1468	Exar	XR1468	3228-7
	Motorola	MC1468	3228-10
			3230-6
			3230-8
	SiliconG	SG1468	3228-16
			3230-10
		SG1468T	3230-12
146805E2			
	Motorola	**MC146805E2**	**★1503**
			★1505
			1342-46
			¶ 263-14
			¶ 268-16
			★1503
			★1505
			1273-26
			¶ 263-14
			¶ 268-16
146805F2			
	Motorola	**MC146805F2**	**★1503**
			★1505
			1342-3
			¶ 264-13
			★1503
			★1505
			1273-27
146805G2			
	Motorola	**MC146805G2**	**★1503**
			★1505
			1342-5
			¶ 260-16
			★1503
			★1505
			1273-28
146805H2			
	Motorola	**MC146805H2**	**★1503**
			★1505
			1273-29
14680G2			
	Motorola	MC14680G2	1342-4
146818	Motorola	MC146818	1342-134
			¶ 264-14
			¶ 266-17
146823	Motorola	MC146823	1343-45
			¶ 266-17
1468705			
	Motorola	**M1468705EVM**	**★1921**
1468705F2			
	Motorola	**MC1468705F2**	**★1503**
1468705F5			
	Motorola	**MC1468705F5**	**★1503**
1468705G2			
	Motorola	**MC1468705G2**	**★1503**
			1342-2
	Motorola	MC1468705G2	1273-30

¶ Indicates page number in Application Note Directory.
★ Indicates addition data is provided on the page noted.

Base Number	Source	Device	Page-Line
1469	**Motorola**	**MC1469**	★3532
			3228-85
			3228-86
147	Harris	LF147	3213-13
1470	Sanyo	LB1470	2661-29
	SGS	TDA1470	3172-84
		TDA1470A	3172-85
	TI	**TMS1470**	★1708
			1265-7
1472	**Motorola**	**MC1472**	★3064
			2681-145
	Western	PT1472B	2686-19
		PT1472B-01	2686-20
1473	Sanyo	LB1473	3168-110
148	AMD	LM148	3211-31
	Fairchild	uA148	3211-32
	Motorola	LM148	3211-33
	Raytheon	LM148	3211-34
	TI	LM148	3211-35
1480	TeledyneP	1480	3176-4
1482	Western	PT1482B	2686-24
		PT1482B-01	2686-27
1488	**Exar**	**XR1488**	★3384
			2668-48
	Fairchild	uA1488	2668-49
	Motorola	**MC1488**	★3064
			2668-51
			¶ 288-14
	National	DS1488	2668-52
			¶ 285-14
	Signetics	MC1488	2668-53
	SiliconG	SG1488	2668-54
	TI	MC1488	2668-55
1489	**Exar**	**XR1489A**	★3384
			2672-34
	Fairchild	uA1489	2672-26
		uA1489A	2672-35
	Motorola	**MC1489**	★3064
			2672-28
			¶ 288-14
		MC1489A	★3064
			2672-37
			¶ 288-14
	National	DS1489	2672-29
			¶ 285-14
		DS1489A	2672-38
			¶ 285-14
	Signetics	MC1489	2672-30
		MC1489A	2672-39
	SiliconG	SG1489	2672-31
		SG1489A	2672-40
149	National	LM149	3211-36
	Raytheon	LM149	3211-37
	SGS	L149	3164-167
1494	Motorola	MC1494	3235-37
1495	Motorola	MC1495	3235-38
	SiliconG	SG1495	3235-43
1496	Motorola	MC1496	3232-76
	National	LM1496	3232-78
	Signetics	MC1496	3232-86
	SiliconG	SG1496	3232-90
1498	**Panasonic**	**MN1498**	★1588
			1337-107
			¶ 274-7
	Panasonic	MN1498	1261-28
1499	**Panasonic**	**MN1499**	★1587
			★1588
			1337-105
			¶ 274-7
			★1587
			★1588
			1261-29
		MN1499A	★1587
			★1588
			1337-106
			¶ 274-7
			★1587
			★1588
			1261-30
14H4	**MMI**	**HAL14H4-2C**	★4776
			★4782
			★4788
			4484-22
		HAL14H4C	★4776
			★4782
			4483-43
			(Continued)

Base Number	Source	Device	Page-Line
14H4	**MMI**	**HAL14H4M**	★4776
			★4782
			4483-114
		PAL14H4-2C	★4768
			4481-131
		PAL14H4-2M	★4768
			4482-22
		PAL14H4C	★4768
			4481-6
		PAL14H4M	★4768
			4481-83
	National	DMPAL14H4AC	
			4480-45
		DMPAL14H4AM	
			4480-78
		DMPAL14H4C	4481-22
		DMPAL14H4M	4481-98
	SI-Fab	**HCT14H4**	★4827
			4483-68
	Zytrex	ZX-CAL14H4	4483-91
14L4	**MMI**	**HAL14L4-2C**	★4776
			★4782
			★4788
			4484-23
		HAL14L4C	★4776
			★4782
			4483-44
		HAL14L4M	★4776
			★4782
			4483-115
		PAL14L4-2C	★4768
			4481-132
		PAL14L4-2M	★4768
			4482-23
		PAL14L4C	★4768
			4481-7
		PAL14L4M	★4768
			4481-84
	National	DMPAL14L4AM	
			4480-79
		DMPAL14L4C	4481-23
		DMPAL14L4M	4481-99
		DMPL14L4AC	4480-53
	SI-Fab	**HCT14L4**	★4827
			4483-69
	Zytrex	ZX-CAL14L4	4483-92
14L8	**MMI**	**HAL14L8C**	★4776
			★4783
			4483-100
		PAL14L8C	★4768
			4481-47
		PAL14L8M	★4768
			4481-48
	National	DMPAL14L8C	4481-62
		DMPAL14L8M	4481-63
	SI-Fab	**HCT14L8**	★4827
			4483-70
14X41	Reticon	RA14X41	3234-31
15	**Burr-Brown**	**VFC15**	★2849
	CIC	MSA-15	4473-27
	Datricon	ACS15/65	1957-36
	GI	LA15	4466-42
	Lambda	LAS15CB	3224-14
		LAS15U	3228-44
	MCE	D15A	4471-18
		D15B	4471-22
		D15C	4471-16
		D15D	4471-25
	MicroPwr	OP-15A	3185-54
		OP-15B	3188-18
		OP-15C	3192-33
		OP-15E	3185-55
		OP-15F	3188-19
		OP-15G	3192-34
	MicroTech	SGA15	4462-9
	PMI	**OP-15A**	★3566
			3185-56
			¶ 284-16
		OP-15B	★3566
			3188-20
			¶ 284-16
		OP-15C	★3566
			3192-35
			¶ 284-16
		OP-15E	★3566
			3185-57
			(Continued)

Base Number	Source	Device	Page-Line
15	**PMI**	**OP-15E**	¶ 284-16
		OP-15F	★3566
			3188-21
			¶ 284-16
		OP-15G	★3566
			3192-36
			¶ 284-16
	Supertex	ED15	592-122
150	ArrayTech	AT-D-150	4466-4
		AT-HSD-150	4462-34
	IntMicCir	Interchip 150	4463-32
	LinearTech	LM150	3228-58
		LM150A	3228-59
	Motorola	**LM150**	★3532
			3228-62
	National	AF150	3232-22
		LM150	3228-65
			¶ 314-6
	Siemens	G150	3218-91
	SiliconG	SG150	3228-68
		SG150A	3228-69
	Unitrode	**UC150**	★3711
			3228-75
1500	AMD	AM1500C	3162-3
		AM1500L	3161-9
		AM1500M	3161-10
	AMI	**GA1500**	★4619
			4461-52
	ArrayTech	AT-D-1500	4466-11
		AT-HSD-1500	4462-41
	MicroTech	SG1500	4465-44
	Motorola	**MC1500-10**	★3534
			3237-75
		MC1500-2	★3534
			3236-112
		MC1500-5	★3534
			3236-150
		MC1500-6	★3534
			3237-7
		MC1500A-10	★3534
			3237-76
		MC1500A-2	★3534
			3236-113
		MC1500A-5	★3534
			3236-151
		MC1500A-6	★3534
			3237-8
	National	MCA1500M	4460-5
	Plessey	**CLA1500**	★4819
			4468-17
	SMOS	SED1500	2661-56
	Sanyo	LB1500	3170-99
	Signetics	**SMVME1500**	★2052
1501	SiliconG	SG1501A	3228-20
			¶ 314-5
	TI	TCM1501A	3219-32
			¶ 299-1
1502	SiliconG	SG1502	3230-14
	Western	FR1502-10	3757-30
		FR1502-11	3757-27
1503	**Motorola**	**MC1503**	★3535
			3236-114
		MC1503A	★3535
			3236-115
	SiliconG	SG1503	3236-124
1504	**Motorola**	**MC1504-10**	★3535
			3237-77
		MC1504-5	★3535
			3236-152
		MC1504-6	★3535
			3237-9
		MC1504A-10	★3535
			3237-78
1505	Lambda	LAS1505	3221-83
	Motorola	MC1505	2637-41
1506	AMD	AM1506	3788-3
	Lambda	LAS1506	3222-49
	Motorola	**MC1506**	★3069
			2638-29
	Signetics	TDA1506	3173-62
			3235-10
	TI	TCM1506A	3219-33
			¶ 299-1
1507	AMD	AM1507	3788-4

Base Number	Source	Device	Page-Line
1508	AMD	AM1508-8	2641-17
		SSS1508A-8	2641-9
	AD	**AD1508-8**	★2825
			2641-11
		AD1508-9	★2825
			2639-47
	Lambda	LAS1508	3222-116
	Motorola	**MC1508-8**	★3069
			2641-23
			¶ 280-10
	National	MC1508-8	2641-25
	PMI	DAC-1508A-8	2641-13
	Signetics	MC1508-8	2641-27
		TDA1508	3169-129
151	Fairchild	CCD151	3234-53
			3234-106
	Intersil	DG151A	2615-99
		DG151B	2615-106
	National	AF151	3232-23
		LF151	3195-24
		LF151A	3190-21
	NEC	uPC151	3198-47
	Siemens	FZJ151A	601-20
	Siliconix	**DG151A**	★3077
			2615-102
		DG151B	★3077
			2615-108
1510	Lambda	LAS1510	3223-39
	Signetics	TDA1510	3165-100
	Western	WD1510-00	3757-65
		WD1510-01	3757-66
		WD1510-02	3757-71
1511	Thomson-CSF	TEA1511	2681-10
			3238-82
1512	Lambda	LAS1512	3223-88
	Signetics	TDA1512	3165-63
	TI	TCM1512A	3219-34
			¶ 299-1
	Thomson-CSF	TEA1512	640-24
			2679-4
1513	TI	TCM1513A	3219-35
1514	Motorola	MC1514	3160-51
			¶ 300-5
	National	LM1514	3160-50
1515	Lambda	LAS1515	3224-61
	Sanyo	LB1515	3170-100
	Signetics	TDA1515	3165-101
1516	Weitek	WTL1516	641-98
1517	Weitek	WTL1517	641-99
1518	Lambda	LAS1518	3225-6
152	Intersil	DG152A	2616-6
	Siliconix	**DG152A**	★3077
			2616-9
		DG152B	★3077
			2616-44
1520	Lambda	LAS1520	3225-47
	Signetics	TDA1520	3165-64
	TI	TCM1520A	3218-60
			3219-36
			¶ 299-1
1521	Plessey	SL1521	3156-133
			¶ 297-9
			¶ 302-1
1522	Plessey	SL1522	3156-134
	Signetics	TDA1522	3165-173
1523	Plessey	SL1523	3156-135
1524	**Exar**	**XR1524**	★3381
			3230-25
	Lambda	LAS1524	3225-92
	National	LM1524	3230-81
	Plessey	SL1524	3156-136
	RCA	**CA1524**	★3602
			3230-90
	Signetics	TDA1524	3164-34
			3172-49
	SiliconG	SG1524	3230-103
			¶ 309-1
			¶ 309-3
			¶ 314-3
	TI	SG1524	3230-132
	Unitrode	**UC1524**	★3709
			3231-49
		UC1524/883B	★3709
		UC1524A	★3709
			(Continued)

Arranged alphanumerically from left to right.

© IC MASTER 1984

Base Number	Source	Device	Page-Line
1524	**Unitrode**	**UC1524A**	★3709
			3231-50
			¶ 313-5
		UC1524A/883B	★3709
1525	**Exar**	**XR1525A**	★3381
			3230-26
	Motorola	**SG1525A**	★3533
			3230-65
	Plessey	SL1525	3156-137
	SiliconG	SG1525A	3230-104
			¶ 309-2
	Unitrode	**UC1525A**	★3709
			3231-51
		UC1525A/883B	★3709
1526	**Motorola**	**SG1526**	★3533
			3230-66
	SiliconG	SG1526	3230-105
			¶ 313-3
	TI	**TL1526**	★ 541
	Unitrode	**UC1526**	★3709
			3231-52
		UC1526/883B	★3709
1527	**Exar**	**XR1527A**	★3381
			3230-27
	Motorola	**SG1527A**	★3533
			3230-67
	SiliconG	SG1527A	3230-106
			¶ 309-2
	TI	**TL1527**	★ 541
	Unitrode	**UC1527A**	★3709
			3231-53
		UC1527A/883B	★3709
1528	Lambda	LAS1528	3225-122
153	Harris	LF153	3204-51
	Intersil	DG153A	2620-24
		DG153B	2620-30
	National	LF153	3206-50
	Siemens	SM153	3217-84
	SiliconG	SG153-05	3222-7
		SG153-08	3223-4
		SG153-12	3223-133
		SG153-15	3224-100
		SG153-18	3225-30
	Siliconix	**DG153A**	★3079
			2620-27
		DG153B	★3079
			2620-32
1531	Plessey	SL1531	3156-129
1532	Plessey	SL1532	3156-130
	SiliconG	SG1532	3229-51
1533	Signetics	TDA1533	3173-66
1534	Signetics	S1534	640-86
		SA1534	640-85
	Signetics	**SAB1534**	★ 858
			599-24
		SAF1534	★ 858
			599-26
1535	Unitrode	UC1535	3231-54
1536	Motorola	MC1536	3176-126
			3195-39
		MC1536R	3229-111
	National	LM1536	3176-131
			3195-40
	SiliconG	SG1536	3176-132
			3195-41
1537	Motorola	MC1537	3207-55
	Raytheon	RM1537	3207-33
1538	Motorola	MC1538	3155-20
15380	Rockwell	15380	1339-115
1539	Motorola	MC1539	3193-26
154	Intersil	DG154A	2620-54
		DG154B	2620-81
	NEC	uPC154	3188-46
	Siliconix	**DG154A**	★3079
			2620-57
		DG154B	★3079
			2620-83
1541	**Panasonic**	**MN1541**	★1589
			1337-122
	Panasonic	MN1541	1263-1
1542	**Panasonic**	**MN1542**	★1589
			1337-123
	Panasonic	MN1542	1263-2
	SiliconG	SG1542	3235-112
1543	**Exar**	**XR1543**	★3382
			3235-138
			(Continued)

Base Number	Source	Device	Page-Line
1543	SiliconG	SG1543	3235-141
			¶ 312-7
			¶ 313-4
	Unitrode	**UC1543**	★3710
			3235-147
1544	Motorola	MC1544	2684-73
	Panasonic	**MN1544**	★1589
			1337-124
	Panasonic	MN1544	1263-3
	SiliconG	SG1544	3235-142
	Unitrode	**UC1544**	★3710
			3235-148
1545	Motorola	MC1545	3156-44
			¶ 297-12
1549	SiliconG	SG1549	3232-117
			¶ 312-12
155	AMD	LF155	3175-47
			3186-10
		LF155A	3189-38
	Intersil	LF155	3175-48
			3186-11
		LF155A	3189-40
	Motorola	LF155	3175-49
			3186-12
		LF155A	3189-42
	National	LF155	3194-56
		LF155A	3189-44
	PMI	PM-155	3175-50
			3186-13
		PM-155A	3189-46
	Siemens	FZJ155A	601-21
1550	Motorola	MC1550	3156-89
	Plessey	SL1550	3156-98
	Sanyo	LB1550	3170-101
1553	SMC	COM1553A	2686-46
		COM1553B	2686-47
15530	**Harris**	**HD15530-2**	★1493
			★1498
			592-49
			¶ 285-4
		HD15530-9	★1493
			★1498
			592-50
			¶ 285-4
			★1493
			★1498
			2686-1
		HS15530RH	★4660
			2685-95
	Harris	HS15530RH	1354-13
15531	Harris	HD15531-2	592-51
			¶ 285-4
			2686-2
		HD15531-9	592-52
			¶ 285-4
			2686-3
	Harris	**HD15531B**	★1493
			★1499
			2686-4
			¶ 285-4
1554	Motorola	MC1554	3164-83
			¶ 296-16
1555	Motorola	MC1555	3220-38
	NEC	uPC1555	3220-40
1556	Motorola	MC1556	3193-35
1558	Fairchild	uA1558M	3207-34
	Motorola	MC1558	3207-36
		MC1558N	3207-54
		MC1558S	3207-23
	National	LM1558	3207-38
	PMI	PM-1558	3207-40
	Raytheon	RM1558	3207-42
	RCA	CA1558	3207-44
	Signetics	MC1558	3207-46
	SiliconG	SG1558	3207-48
	TI	MC1558	3207-50
156	AMD	LF156	3194-60
		LF156A	3189-48
	Intersil	LF156	3195-2
		LF156A	3189-50
	Motorola	LF156A	3189-52
	National	LF156	3195-4
		LF156A	3189-54
			(Continued)

Base Number	Source	Device	Page-Line
156	**PMI**	**PM-156**	★3566
			3195-7
		PM-156A	★3566
			3189-56
1562	**Panasonic**	**MN1562**	★1589
			1337-125
	Panasonic	MN1562	1263-4
1563	**Motorola**	**MC1563G**	★3532
			3229-82
1564	**Panasonic**	**MN1564**	★1589
			1337-126
	Panasonic	MN1564	1263-5
15666	Motorola	MC15666	3229-68
1568	Exar	XR1568	3228-8
	Motorola	MC1568	3228-11
			3230-7
			3230-9
	SiliconG	SG1568	3228-17
			3230-11
		SG1568T	3230-13
1569	**Motorola**	**MC1569**	★3532
			3229-29
			3229-30
157	Intersil	LF157	3194-47
		LF157A	3189-30
	Motorola	LF157A	3189-32
	National	LF157	3194-49
		LF157A	3189-34
	NEC	uPC157	3199-52
	PMI	**PM-157**	★3566
			3194-52
		PM-157A	★3566
			3189-36
1571	Signetics	TDA1571	3168-32
1574	Signetics	TDA1574	3168-33
1576	Signetics	TDA1576	3168-50
1578	Signetics	TDA1578A	3168-155
158	Motorola	LM158	3180-21
			3207-8
	National	LM158	3180-24
			3207-9
		LM158A	3180-16
	RCA	CA158	3180-28
			3207-11
		CA158A	3205-22
	Signetics	LM158	3180-30
			3207-13
	TI	LM158	3180-34
			3207-16
1580	Signetics	TDA 1580	3168-21
159	National	LM159	3203-21
1590	Motorola	MC1590G	3155-36
			¶ 297-1
1591	**Panasonic**	**MN1591**	★1589
			1337-128
1594	Motorola	MC1594	3235-39
1595	Motorola	MC1595	3235-40
	SiliconG	SG1595	3235-44
1596	Motorola	MC1596	3232-77
	National	LM1596	3232-79
	Signetics	MC1596	3232-87
	SiliconG	SG1596	3232-91
1599	**Panasonic**	**MN1599**	★1589
			1337-127
15A05	Lambda	LAS15A05	3221-84
15A12	Lambda	LAS15A12	3223-89
15A15	Lambda	LAS15A15	3224-62
16	AMD	AMPAL16LDM	4481-38
	Burr-Brown	**MPC16S**	★2850
			2624-75
	Datel	**DAC-HP16BMC**	★2861
			2659-15
		DAC-HP16BMC-1	
			★2861
			2659-16
		DAC-HP16BMM	★2861
			2659-17
		DAC-HP16BMM-1	
			★2861
			2659-18
		DAC-HP16DGC	★2861
			2659-31
		DAC-HP16DMC	★2861
			2659-32
		DAC-HP16DMM	★2861
			2659-33
			(Continued)

Base Number	Source	Device	Page-Line
16	**Datel**	**HDAS-16MC**	★2861
			2631-3
	Datel	HDAS-16MC	3233-48
	Datel	**HDAS-16MM**	★2861
			2631-4
	Datel	HDAS-16MM	3233-49
	Digelec	GP-16 Gang Programmer	4353-5
	Fairchild	GLOW-16	1967-23
		SPARK-16	1967-24
	Ferranti	ULA16RA	4464-41
		ULA16RB	4468-34
			4469-3
		ULA16RC	4470-21
			4470-47
		ULA16RD	4471-37
			4472-1
	GI	SPR-16	3783-94
	Harris	**HIDAC16B**	★2946
			2658-22
		HIDAC16C	★2946
			2658-39
	Interdesign	ULA16RA	4464-42
		ULA16RB	4468-35
			4469-4
		ULA16RC	4470-22
			4470-48
		ULA16RD	4471-38
			4472-2
	Lambda	LAS16CB	3224-15
			3224-16
		LAS16U	3228-45
	MicroPwr	OP-16A	3185-58
		OP-16B	3188-22
		OP-16C	3192-37
		OP-16E	3185-59
		OP-16F	3188-23
		OP-16G	3192-38
	MicroTech	CCD16DMUX	3232-39
		CCD16MUX	3232-38
	National	LX16XXA	3236-19
		LX16XXD	3236-25
		LX16XXG	3236-31
		LX16XXGB	3236-23
	National	**SYS16**	★1515
	PMI	MUX-16A	2624-83
			¶ 290-5
		MUX-16B	2624-85
			¶ 290-5
		MUX-16E	2624-84
			¶ 290-5
		MUX-16F	2624-86
			¶ 290-5
	PMI	**OP-16A**	★3566
			3185-60
			¶ 284-16
		OP-16B	★3566
			3188-24
			¶ 284-16
		OP-16C	★3566
			3192-39
			¶ 284-16
		OP-16E	★3566
			3186-1
			¶ 284-16
		OP-16F	★3566
			3188-25
			¶ 284-16
		OP-16G	★3566
			3192-40
			¶ 284-16
	Trans-Data	UMC-16	2686-83
	TRW-LSI	MPY16HD	604-138
			604-139
160	National	LM160	3160-1
1600	GI	CP-1600	1285-10
		CP1600	1339-117
	National	LX1600A	3236-16
			¶ 315-7
			¶ 315-8
	Supertex	CM1600	3784-48
		CM1600-2	3784-51
		MM1600	3784-52
	TI	**TMS1600**	★1708
			1265-8
			(Continued)

¶ Indicates page number in Application Note Directory.
★ Indicates addition data is provided on the page noted.

Base Number	Source	Device	Page-Line
1600	Thomson-CSF		
		ESM1600	2674-14
	Western	CP1600	1281-33
		MP1600	1287-23
16000	**Fairchild**	**F16000**	★1454
			★1470
			1350-23
			1352-39
			1352-42
	Intersil	IGD16000	4461-8
	National	DB16000	1965-25
	National	**NS16000**	★1513
	Signetics	**SMSFT16000**	★1930
16008	**Fairchild**	**F16008**	★1470
			1350-24
			1352-40
			1352-43
	Fairchild	F16008	1267-14
	National	NS16008	1352-41
			1352-45
		SC16008	1277-21
1601	Sanyo	LB1601	3238-92
16016	**Fairchild**	**F16016**	★1470
			1350-25
			1351-73
	Fairchild	F16016	1285-4
	National	NS16016	1350-26
			1352-53
			1287-3
1602	AMI	S1602	2686-81
	Thomson-CSF		
		ESM1602	2674-15
	Western	TR1602	2686-50
			¶ 285-9
1603	National	DS1603	2673-37
			2684-55
16032	**Fairchild**	**F16032**	★1470
			1351-74
	Fairchild	F16032	1287-32
	National	**NS16032**	★1513
			1352-46
		NS16032-10	★1513
			1289-5
		NS16032-4	★1513
			1289-6
		NS16032-6	★1513
			1351-75
	National	NS16032-6	1289-7
1605	Fairchild	SH1605A	3230-38
	ITT	TDD1605	3221-39
	Lambda	LAS1605	3221-113
		LAS1605B	3221-114
	National	LH1605	3230-79
		LH1605C	3230-80
1606	**Datel**	**MV-1606**	★2864
			2624-47
		MV-1606M	★2864
			2624-43
		MX-1606	★2864
			2624-76
		MX-1606M	★2864
			2624-74
	ITT	TDD1606	3222-33
1607	Thomson-CSF		
		TDE1607	2680-139
1608	**Harris**	**HA-1608**	★3392
	ITT	TDD1608	3222-101
	Lambda	LAS1608	3223-1
16081	**Fairchild**	**F16081**	★1470
			1350-30
			1352-62
	National	**NS16081**	★1513
			1351-76
16082	**Fairchild**	**F16082**	★1470
			1350-35
			1352-66
	National	**NS16082**	★1513
			1351-80
161	Intersil	DG161A	2618-19
	National	LM161	3159-32
	Siemens	FZH161	602-23
		FZJ161	602-20
	Siliconix	**DG161A**	★3078
			2618-22
		DG161B	★3078
			2618-27
			(Continued)

Base Number	Source	Device	Page-Line
161	**Siliconix**	**L161**	★3083
			3162-48
			¶ 300-7
1610	HiLevel	DS1610EMULYZER	
			1813-1
	ITT	TDD1610	3223-35
	Panasonic	MN1610	1350-105
			1287-5
16105	**Fairchild**	**F16105**	★1470
			1350-32
			1352-72
1611	National	DS1611	2681-110
	Panasonic	MN1611	1350-106
			1287-6
1612	ITT	TDD1612	3223-60
	Lambda	LAS1612	3223-121
		LAS1612B	3223-122
	National	DS1612	2681-149
1613	National	DS1613	2682-53
1614	National	DS1614	2682-19
16147	National	DS16147	2682-148
16149	National	DS16149	614-80
			2683-82
1615	ITT	TDD1615	3224-34
	Lambda	LAS1615	3224-87
		LAS1615B	3224-88
1616	**Datel**	**MX-1616**	★2864
			2624-72
		MX-1616M	★2864
			2624-73
16177	National	DS16177	2682-149
16179	National	DS16179	614-81
			2683-83
1618	ITT	TDD1618	3224-117
162	Intersil	DG162A	2618-49
	Siliconix	**DG162A**	★3078
			2618-52
		DG162B	★3078
			2618-78
16201	**Fairchild**	**F16201**	★1470
			1350-39
			1352-71
	National	**NS16201**	★1514
			1351-82
		NS16201-6	★1514
			1351-78
16202	**Fairchild**	**F16202**	★1470
			1350-33
			1352-64
	National	**NS16202**	★1514
			1351-79
16203	**Fairchild**	**F16203**	★1470
			1350-29
			1352-60
	National	**NS16203**	★1514
			1352-61
16204	**Fairchild**	**F16204**	★1470
			1350-27
			1352-54
	National	**NS16204**	★1514
			1350-28
			1352-55
1623	Interdesign	MOF1623B	2674-44
1624	ITT	TDD1624	3225-70
16250	**RCA**	**MA16250**	★4824
			4467-17
1627	SiliconG	SG1627	2679-55
			¶ 312-11
1628	National	DS1628	2683-117
1629	SiliconG	SG1629	2622-26
			2680-62
			¶ 312-11
			3238-104
163	Intersil	DG163A	2620-102
		DG163B	2620-108
	National	LM163	3183-3
		LM163A	3155-88
			3182-8
	Siliconix	**DG163A**	★3079
			2620-105
		DG163B	★3079
			2620-110
1630	National	DS1630	572-55
	Panasonic	MN1630	1350-109
1631	National	DS1631	2681-106
	Panasonic	MN1631	1350-110

Base Number	Source	Device	Page-Line
1632	National	DS1632	2681-143
1633	National	DS1633	2682-49
1634	National	DS1634	2682-15
1635	SiliconG	SG1635	2679-42
			3234-141
1637	**Unitrode**	**UC1637**	★3710
164	Intersil	DG164A	2620-116
		DG164B	2621-4
	Siliconix	**DG164A**	★3079
			2620-119
		DG164B	★3079
			2621-6
1640	National	DS1640	2683-14
	Panasonic	MN1640	1350-108
16413	**Fairchild**	**F16413**	★1470
			1352-56
			1352-57
	National	**NS16413**	★1514
			1352-58
			1352-59
1642	National	DS1642	2681-57
16425	**Fairchild**	**F16425**	★1470
			1350-37
			1352-68
	National	**NS16425**	★1514
			1350-38
			1352-69
1644	National	DS1644	2683-7
1645	National	DS1645	2683-94
16450	**National**	**NS16450**	★1514
16455	**National**	**NS16455**	★1514
			1352-70
16456	**Fairchild**	**F16456**	★1470
			1350-36
			1351-81
	National	**NS16456**	★1514
			1352-67
1646	National	DS1646	2683-130
1647	National	DS1647	2682-150
	Thomson-CSF		
		TDE1647	2680-138
		TDE1647A	2680-140
1648	Motorola	MC1648	600-52
			3214-152
		MC1648M	600-53
			3214-153
	National	DS1648	2682-156
	Plessey	SP1648	600-54
			¶ 302-1
16488	**Fairchild**	**F16488**	★1470
			1350-31
			1351-77
	National	**NS16488**	★1514
			1352-63
1649	National	DS1649	2683-90
165	MCE	MCEL165	3175-60
	National	LP165	3236-33
	Siemens	FZH165B	602-24
1650	GI	PIC1650A	1339-120
			¶ 275-5
			1269-3
	Motorola	MC1650	600-55
			¶ 256-12
	National	DS1650	2674-17
	Panasonic	MN1650	1350-107
	Plessey	SP1650B	600-57
1651	Motorola	MC1651	600-56
	National	DS1651	2684-63
	NEC	uPC1651	3156-95
	NEC	**μPC1651G**	★3554
	Western	CP1651	1348-124
		MP1651	1348-126
1652	GI	PIC1652	1269-4
	National	DS1652	2674-20
1653	National	DS1653	2684-64
1654	GI	PIC1654	1339-121
			1269-5
	Motorola	MC1654	600-30
1655	GI	PIC1655A	1339-122
			1269-6
1656	GI	PIC1656	1339-123
			1269-7
1657	GI	PIC1657	1269-8
1658	Motorola	MC1658	600-49
			3214-154
			(Continued)

Base Number	Source	Device	Page-Line
1658	Plessey	SP1658	600-50
			3214-155
166	Cherry	CS166	3233-96
	Siemens	FZJ166	602-21
1660	Motorola	MC1660	600-40
			¶ 257-3
	Plessey	SP1660B	600-41
1661	Western	CP1661	1348-125
		MP1661	1348-127
1662	Motorola	MC1662	600-39
			¶ 256-10
			¶ 257-3
1664	Motorola	MC1664	600-38
			¶ 257-3
1666	Motorola	MC1666	600-37
1668	Motorola	MC1668	600-48
1670	GI	PIC1670	1339-124
			1269-9
	Motorola	MC1670	600-32
	National	DS1670	2683-15
	Plessey	SP1670B	600-33
	SGS	TDA1670	3172-86
	TI	**TMS1670**	★1708
			1265-9
1671	National	DS1671	2681-58
	SMC	COM1671	2685-16
			1348-128
	Western	UC1671	2685-17
			1348-129
1672	GI	PIC1672	1339-125
			1269-10
	Motorola	MC1672	600-46
	National	DS1672	2681-59
1674	Motorola	MC1674	600-47
	National	DS1674	2683-8
1675	National	DS1675	2683-95
1676	National	DS1676	2683-131
1677	National	DS1677	2682-151
1678	Motorola	MC1678	600-13
	National	DS1678	2682-157
1679	National	DS1679	2683-91
168	National	LM168-10	3237-80
		LM168-5	3236-155
		LM168-6	3236-181
16802	Fairchild	F16802	1350-34
1681L100			
	IDT	**IDT1681L100**	★3993
1681L45			
	IDT	**IDT1681L45**	★3993
1681L55			
	IDT	**IDT1681L55**	★3993
1681L70			
	IDT	**IDT1681L70**	★3993
1681L85			
	IDT	**IDT1681L85**	★3993
1681S100			
	IDT	**IDT1681S100**	★3993
1681S45			
	IDT	**IDT1681S45**	★3993
1681S55			
	IDT	**IDT1681S55**	★3993
1681S85			
	IDT	**IDT1681S85**	★3993
1686	National	DS1686	2680-146
			3218-49
1687	National	DS1687	2680-147
			3218-50
1688	Motorola	MC1688	600-45
	National	DS1688	2671-30
1689	National	DS1689	2674-34
169	**Siliconix**	**D169**	★3080
1690	Motorola	MC1690	600-36
	National	DS1690	2674-35
1691	National	DS1691	2668-44
	Western	WD1691	1353-121
1692	Motorola	MC1692	600-58
			¶ 256-12
	National	DS1692	2671-32
	Plessey	SP1692B	600-59
16923	TI	SN16923	3164-126
1694	Motorola	MC1694	600-51
			3789-66
1697	Motorola	MC1697	600-14
1699	Motorola	MC1699	600-15
16A4	**MMI**	**HAL16A4C**	★4776
			★4784
			(Continued)

Arranged alphanumerically from left to right.

© IC MASTER 1984

Base Number	Source	Device	Page-Line
16A4	MMI	HAL16A4C	4483-101
		HAL16A4M	★4776
			★4784
			4483-116
		PAL16A4C	★4768
			4481-49
		PAL16A4M	★4768
			4481-85
	National	DMPAL16A4M	637-8
	SI-Fab	HCT16A4	★4827
			4483-71
16C032	National	NS16C032	★1513
			1352-47
16C1	MMI	HAL16C1-2C	★4776
			★4782
			★4788
			4484-24
		HAL16C1C	★4776
			★4782
			4483-102
		HAL16C1M	★4776
			★4782
			4483-117
		PAL16C1-2C	★4768
			4481-133
		PAL16C1-2M	★4768
			4482-24
		PAL16C1C	★4768
			4481-50
		PAL16C1M	★4768
			4481-86
	National	DMPAL16C1AC	4480-46
		DMPAL16C1AM	4480-80
		DMPAL16C1C	4481-24
		DMPAL16C1M	4481-100
	SI-Fab	HCT16C1	★4827
			4483-72
16C58	GI	PIC16C58	1269-11
16F60	Plessey	SP16F60	600-42
16H2	MMI	HAL16H2-2C	★4776
			★4782
			4484-25
		HAL16H2C	★4776
			★4782
			4483-45
		HAL16H2M	★4776
			★4782
			4483-118
		PAL16H2-2C	★4768
			4481-134
		PAL16H2-2M	★4768
			4482-25
		PAL16H2C	★4768
			4481-8
		PAL16H2M	★4768
			4481-87
	National	DMPAL16H2AC	4480-47
		DMPAL16H2AM	4480-81
		DMPAL16H2C	4481-25
		DMPAL16H2M	4481-101
	SI-Fab	HCT16H2	★4827
			4483-73
	Zytrex	ZX-CAL16H2	4483-93
16H8	AMD	AMPAL16H8AC	★4600
			4480-25
		AMPAL16H8AM	★4600
			4480-59
		AMPAL16H8C	★4600
			4480-92
		AMPAL16H8LC	★4600
			4480-93
		AMPAL16H8LM	★4600
			4481-31
		AMPAL16H8M	★4600
			4481-32
16HD8	AMD	AMPAL16HD8AC	
			★4600
			4480-26
		AMPAL16HD8AM	
			★4600
			4480-60
		AMPAL16HD8C	★4600
			(Continued)

Base Number	Source	Device	Page-Line
16HD8	AMD	AMPAL16HD8C	4480-94
		AMPAL16HD8LC	
			★4600
			4480-95
		AMPAL16HD8LM	
			★4600
			4481-33
		AMPAL16HD8M	★4600
			4481-34
16L2	MMI	HAL16L2-2C	★4776
			★4782
			★4788
			4484-26
		HAL16L2C	★4776
			★4782
			4483-46
		HAL16L2M	★4776
			★4782
			4483-119
		PAL16L2-2C	★4768
			4482-1
		PAL16L2-2M	★4768
			4482-26
		PAL16L2C	★4768
			4481-9
		PAL16L2M	★4768
			4481-88
	National	DMPAL16L2AC	4480-48
		DMPAL16L2AM	4480-82
		DMPAL16L2C	4481-26
		DMPAL16L2M	4481-102
	SI-Fab	HCT16L2	★4827
			4483-74
	Zytrex	ZX-CAL16L2	4483-94
16L6	MMI	HAL16L6C	★4776
			★4783
			4483-103
		HAL16L6M	★4776
			★4783
			4484-1
		PAL16L6C	★4768
			4481-51
		PAL16L6M	★4768
			4481-52
	National	DMPAL16L6C	4481-64
		DMPAL16L6M	4481-65
	SI-Fab	HCT16L6	★4827
			4483-75
16L68	Raytheon	CGA16L68	★ 508
			★4822
			4462-27
			4462-45
16L8	AMD	AMPAL16L8AC	★4600
			4480-27
		AMPAL16L8AM	★4600
			4480-61
		AMPAL16L8C	★4600
			4480-96
		AMPAL16L8LC	★4600
			4480-97
		AMPAL16L8LM	★4600
			4481-35
		AMPAL16L8M	★4600
			4481-36
	MMI	C-HAL16L8	4483-35
	MMI	HAL16L8-2C	★4776
			★4784
			★4789
			4484-10
		HAL16L8-4C	★4776
			★4784
			★4790
			4484-32
		HAL16L8AC	★4776
			★4784
			★4786
			4483-23
		HAL16L8C	★4776
			★4784
			4483-47
		HAL16L8M	★4776
			★4784
			4484-2
		PAL16L8-2C	★4768
			(Continued)

Base Number	Source	Device	Page-Line
16L8	MMI	PAL16L8-2C	4481-107
		PAL16L8-2M	★4768
			4482-10
		PAL16L8-4C	★4768
			4482-27
		PAL16L8-4M	★4768
			4482-31
		PAL16L8A-2C	★4768
			4481-10
		PAL16L8A-2M	★4768
			4481-108
		PAL16L8A-4C	★4768
			4481-123
		PAL16L8A-4M	★4768
			4482-14
		PAL16L8AC	★4768
			4480-33
		PAL16L8AM	★4768
			4480-66
		PAL16L8C	★4768
			4481-11
		PAL16L8M	★4768
			4481-89
	National	DMPAL16L8AC	4480-49
		DMPAL16L8AM	4480-83
		DMPAL16L8C	4481-27
		DMPAL16L8M	4481-103
	SI-Fab	HCT16L8	★4827
			4483-76
	Zytrex	ZX-CAL16L8	4483-95
16LC8	Harris	HPL16LC8-2	4482-35
		HPL16LC8-9	4482-36
16LD8	AMD	AMPAL16LD8AC	
			★4600
			4480-28
		AMPAL16LD8AM	
			★4600
			4480-62
		AMPAL16LD8C	★4600
			4480-98
		AMPAL16LD8LC	
			★4600
			4480-99
		AMPAL16LD8LM	
			★4600
			4481-37
16R4	AMD	AMPAL16R4AC	★4600
			4480-29
		AMPAL16R4AM	★4600
			4480-63
		AMPAL16R4C	★4600
			4480-100
		AMPAL16R4LC	★4600
			4480-101
		AMPAL16R4LM	★4600
			4481-39
		AMPAL16R4M	★4600
			4481-40
	MMI	C-HAL16R4	4483-36
	MMI	HAL16R4-2C	★4776
			★4784
			★4789
			4484-11
		HAL16R4-4C	★4776
			★4784
			★4790
			4484-33
		HAL16R4AC	★4776
			★4784
			★4786
			4483-24
		HAL16R4C	★4776
			★4784
			4483-48
		HAL16R4M	★4776
			★4784
			4484-3
		PAL16R4-2C	★4768
			4481-109
		PAL16R4-2M	★4768
			4482-11
		PAL16R4-4C	★4768
			4482-28
		PAL16R4-4M	★4768
			(Continued)

Base Number	Source	Device	Page-Line
16R4	MMI	PAL16R4-4M	4482-32
		PAL16R4A-2C	★4768
			4481-12
		PAL16R4A-2M	★4768
			4481-110
		PAL16R4A-4C	★4768
			4481-124
		PAL16R4A-4M	★4768
			4482-15
		PAL16R4AC	★4768
			4480-34
		PAL16R4AM	★4768
			4480-67
		PAL16R4C	★4768
			4481-13
		PAL16R4M	★4768
			4481-90
	National	DMPAL16R4AC	4480-50
		DMPAL16R4AM	4480-84
		DMPAL16R4C	4481-28
		DMPAL16R4M	4481-104
	SI-Fab	HCT16R4	★4827
			4483-77
	Zytrex	ZX-CAL16R4	4483-96
16R6	AMD	AMPAL16R6AC	★4600
			4480-30
		AMPAL16R6AM	★4600
			4480-64
		AMPAL16R6C	★4600
			4480-102
		AMPAL16R6LC	★4600
			4480-103
		AMPAL16R6LM	★4600
			4481-41
		AMPAL16R6M	★4600
			4481-42
	MMI	C-HAL16R6	4483-37
	MMI	HAL16R6-2C	★4776
			★4784
			★4789
			4484-12
		HAL16R6-4C	★4776
			★4784
			★4790
			4484-34
		HAL16R6AC	★4776
			★4784
			★4786
			4483-25
		HAL16R6C	★4776
			★4784
			4483-49
		HAL16R6M	★4776
			★4784
			4484-4
		PAL16R6-2C	★4768
			4481-111
		PAL16R6-2M	★4768
			4482-12
		PAL16R6-4C	★4768
			4482-29
		PAL16R6-4M	★4768
			4482-33
		PAL16R6A-2C	★4768
			4481-14
		PAL16R6A-2M	★4768
			4481-112
		PAL16R6A-4C	★4768
			4481-125
		PAL16R6A-4M	★4768
			4482-16
		PAL16R6AC	★4768
			4480-35
		PAL16R6AM	★4768
			4480-68
		PAL16R6C	★4768
			4481-15
		PAL16R6M	★4768
			4481-91
	National	DMPAL16R6AC	4480-51
		DMPAL16R6AM	4480-85
		DMPAL16R6C	4481-29
			(Continued)

¶ Indicates page number in Application Note Directory.
★ Indicates addition data is provided on the page noted.

Base Number	Source	Device	Page-Line
16R6	National	DMPAL16R6M	4481-105
	SI-Fab	**HCT16R6**	**★4827**
			4483-78
	Zytrex	ZX-CAL16R6	4483-97
16R8	**AMD**	**AMPAL16R8AC**	**★4600**
			4480-31
		AMPAL16R8AM	**★4500**
			4480-65
		AMPAL16R8C	**★4600**
			4480-104
		AMPAL16R8LC	**★4600**
			4480-105
		AMPAL16R8LM	**★4600**
			4481-43
		AMPAL16R8M	**★4600**
			4481-44
	MMI	C-HAL16R8	4483-38
	MMI	**HAL16R8-2C**	**★4776**
			★4784
			★4789
			4484-13
		HAL16R8-4C	**★4776**
			★4784
			★4790
			4484-35
		HAL16R8AC	**★4776**
			★4784
			★4786
			4483-26
		HAL16R8C	**★4776**
			★4784
			4483-50
		HAL16R8M	**★4776**
			★4784
			4484-5
		PAL16R8-2C	**★4768**
			4481-113
		PAL16R8-2M	**★4768**
			4482-13
		PAL16R8-4C	**★4768**
			4482-30
		PAL16R8-4M	**★4768**
			4482-34
		PAL16R8A-2C	**★4768**
			4481-16
		PAL16R8A-2M	**★4768**
			4481-114
		PAL16R8A-4C	**★4768**
			4481-126
		PAL16R8A-4M	**★4768**
			4482-17
		PAL16R8AC	**★4768**
			4480-36
		PAL16R8AM	**★4768**
			4480-69
		PAL16R8C	**★4768**
			4481-17
		PAL16R8M	**★4768**
			4481-92
	National	DMPAL16R8AC	
			4480-52
		DMPAL16R8AM	
			4480-86
		DMPAL16R8C	4481-30
		DMPAL16R8M	4481-106
	SI-Fab	**HCT16R8**	**★4827**
			4483-79
	Zytrex	ZX-CAL16R8	4483-98
16RC4	Harris	HPL16RC4-2	4482-37
		HPL16RC4-9	4482-38
16RC6	Harris	HPL16RC6-2	4482-39
		HPL16RC6-9	4482-40
16RC8	Harris	HPL16RC8-2	4482-41
		HPL16RC8-9	4482-42
16X4	**MMI**	**HAL16X4C**	**★4776**
			★4784
			4483-104
		HAL16X4M	**★4776**
			★4784
			4484-6
		PAL16X4C	**★4768**
			4481-53
		PAL16X4M	**★4768**
			4481-93
	SI-Fab	**HCT16X4**	**★4827**
			4483-80

Base Number	Source	Device	Page-Line
17	LinearTech	LT17AHV	3229-59
	MicroPwr	OP-17A	3185-50
		OP-17B	3188-14
		OP-17C	3192-41
		OP-17E	3185-51
		OP-17F	3188-15
		OP-17G	3192-42
	PMI	**OP-17A**	**★3566**
			3185-52
			¶ 284-16
		OP-17B	**★3566**
			3188-16
			¶ 284-16
		OP-17C	**★3566**
			3192-31
			¶ 284-16
		OP-17E	**★3566**
			3185-53
			¶ 284-16
		OP-17F	**★3566**
			3188-17
			¶ 284-16
		OP-17G	**★3566**
			3192-32
			¶ 284-16
	Rockwell	A17XX	1339-111
	Wintek	**MR017**	**★2062**
170	Siemens	UAA170	2661-12
			3234-121
	TI	TL170	641-87
1700	**TI**	**TMS1700**	**★1708**
			1265-10
1702	AMD	AM1702A	3761-2
		AM1702A-1	3761-22
		AM1702A-2	3761-24
		AM1702A-6	3761-4
		AM1702AL	3761-3
		AM1702AL-1	3761-23
		AM1702AL-2	3761-25
1705	TI	TCM1705A	3160-83
			3218-69
1706	**Unitrode**	**UC1706**	**★3710**
1707	TI	TCM1707	3218-96
1708	TI	TCM1708	3218-97
1709	Motorola	MC1709	3196-45
		MC1709A	3191-47
171	Siemens	FZH171	601-73
1710	Cermetek	CH1710	3218-13
	Motorola	MC1710	3159-24
		MC1710C	3160-6
1711	Motorola	MC1711	3161-14
		MC1711C	3161-37
172	**Siliconix**	**DG172A**	**★3077**
			2616-59
		DG172B	**★3077**
			2616-60
		DG172C	**★3077**
			2616-61
	TI	TL172	641-88
		TL172C	3234-27
1720	Cermetek	CH1720	3218-14
1723	**Motorola**	**MC1723**	**★3532**
			3229-9
		MC1723C	**★3532**
			3229-10
1724	**RCA**	**CA1724G**	**★3601**
			3157-156
1725	**RCA**	**CA1725G**	**★3601**
			3157-157
1728	Reticon	RL1728H	3234-75
173	TI	TL173C	3234-28
1730	Cermetek	CH1730	3218-15
	TI	**TMS1730**	**★1708**
1731	SiliconG	SG1731	3173-63
			3235-11
			¶ 307-9
1733	Motorola	MC1733	3156-90
			¶ 285-6
		MC1733C	3156-91
			¶ 285-6
1737	Thomson-CSF		
		TDE1737	2680-141
1740	AD	SDC1740	3237-115
	Cermetek	CH1740	3218-16
1741	AD	SDC1741	3237-116
	Motorola	MC1741	3175-29
			(Continued)

Base Number	Source	Device	Page-Line
1741	Motorola	MC1741	3196-51
		MC1741C	3198-45
		MC1741N	3197-1
		MC1741NC	3199-4
		MC1741NS	3197-16
		MC1741S	3197-14
		MC1741SC	3199-2
	Panasonic	**AN1741**	**★3556**
1742	AD	SDC1742	3237-117
1747	Motorola	MC1747	3207-37
		MC1747C	3208-36
1748	Motorola	MC1748	3197-8
		MC1748C	3198-57
175	Cherry	CS175	3173-45
			3234-155
	Siemens	FZH175	601-74
		S175	3232-37
1751	**TI**	**TMS1751**	**★1709**
1761	SMC	FDC1761-02	1353-70
	Thomson-CSF		
		TEC1761C	3209-4
		TEC1761M	3206-26
	Western	FD1761	1353-83
		FD1761-02	1354-16
1763	SMC	FDC1763-02	1353-71
	Western	FD1763-02	1354-17
1765	AD	DRC1765	3237-144
	SMC	FDC1765-02	1353-72
	Western	FD1765-02	1354-18
1766	AD	DRC1766	3237-145
1767	SMC	FDC1767-02	1353-73
	Thomson-CSF		
		TDE1767	2680-143
		TDE1767A	2680-145
	Western	FD1767-02	1354-19
177	NEC	uPC177	3163-14
1770	SGS	TDA1770	3172-87
	Western	**WD1770**	**★1733**
			1353-92
1771	National	INS1771	1348-134
			1353-99
			¶ 261-6
	Western	FD1771-01	1348-135
			1353-84
1772	**Western**	**WD1772**	**★1733**
			1353-93
1773	**Western**	**WD1773**	**★1733**
			1353-94
17741	Hitachi	HA17741	3198-44
1776	Motorola	MC1776	3196-10
			¶ 303-1
		MC1776C	3190-53
			¶ 303-1
1777	Thomson-CSF		
		TDE1777	2680-137
178	Siemens	S178	3172-183
		S178A	3170-56
17800	CalDevices	HCS17800	4461-53
17805	Hitachi	HA17805P	3221-112
17806	Hitachi	HA17806P	3222-68
17808	Hitachi	HA17808	3222-115
1781	Western	FD1781	1348-136
		FD1781-01	1348-137
			1353-85
17812	Hitachi	HA17812P	3223-120
17815	Hitachi	HA17815P	3224-86
17818	Hitachi	HA17818P	3225-5
17824	Hitachi	HA17824P	3225-112
1787	Thomson-CSF		
		TDE1787	2680-142
		TDE1787A	2680-144
179	Cherry	CS179	3173-87
	Siemens	SAB179X	1353-69
17902	Hitachi	HA17902	3180-6
1791	Siemens	SAB1791-02	1353-101
	SMC	**FDC1791**	**1353-74**
	Synertek	**SY1791-02**	**★1696**
			1353-80
	Western	FD1791-02	1348-138
			1353-86
1792	SMC	FDC1792	1353-75
	Western	FD1792-02	1353-87
1793	SMC	FDC1793	1353-76
	Synertek	**SY1793-02**	**★1696**
			1353-81
	Western	FD1793-02	1343-12
			(Continued)

Base Number	Source	Device	Page-Line
1793	Western	FD1793-02	1344-97
			1345-125
			1346-127
			1351-22
			1353-88
1794	SMC	FDC1794	1353-77
	Western	FD1794-02	1353-89
1795	SMC	FDC1795	1353-78
	Western	FD1795-02	1348-139
			1353-90
1797	SMC	FDC1797	1353-79
	Western	FD1797-02	1343-13
			1344-98
			1345-126
			1346-128
			1351-23
			1353-91
18	Ferranti	ULA18RA	4464-43
		ULA18RB	4468-36
			4469-5
		ULA18RC	4470-23
			4470-49
		ULA18RD	4471-39
			4472-3
	Interdesign	ULA18RA	4464-44
		ULA18RB	4468-37
			4469-6
		ULA18RC	4470-24
			4470-50
		ULA18RD	4471-40
			4472-4
	Lambda	LAS18U	3229-79
	National	LX18XXA	3236-20
		LX18XXD	3236-26
		LX18XXG	3236-32
		LX18XXGB	3236-24
	PMI	**DAC-18**	**★3567**
	TeledyneC	CDA18	2618-91
	Wintek	**MCH18**	**★2062**
			1961-12
		MR018	**★2062**
180	Cherry	CS180	3239-88
	Intersil	DG180A	2615-86
			2615-95
		DG180B	2615-87
			2615-96
	National	FDT180B	3233-94
	Siemens	UAA180	2661-13
			3234-122
	SiliconSys	**SSI180**	**★3685**
			3218-33
	Siliconix	**DG180A**	**★3077**
			2615-88
			2615-97
		DG180B	**★3077**
			2615-89
			2615-98
	Telefunken	U180M	2661-69
			¶ 275-6
1800	ArrayTech	AT-D-1800	4466-12
		AT-HSD-1800	4462-42
	National	LM1800	3168-135
1801	National	LM1801	3173-91
1802	Hughes	HCMP1802A	1340-3
		HCMP1802AC	1340-4
		HCMP1802BC	1340-5
		HMMP1802A	1340-6
		HMMP1802AC	1340-7
		HMMP1802BC	1340-8
	Lambda	LAS1802	3226-2
	RCA	**CDP1802**	**★1591**
			1279-2
			¶ 263-17
			¶ 269-1
			¶ 270-12
			¶ 271-13
			¶ 272-15
			¶ 273-4
			¶ 275-4
			¶ 275-11
			¶ 276-13
			¶ 276-14
			¶ 277-7
		CDP1802A	**★1591**
			1340-9
			¶ 263-17
			(Continued)

Arranged alphanumerically from left to right.

© IC MASTER 1984

Base Number	Source	Device	Page-Line
1802	**RCA**	**CDP1802A**	¶ 269-1
			¶ 270-12
			¶ 271-13
			¶ 272-15
			¶ 273-4
			¶ 275-4
			¶ 275-11
			¶ 276-13
			¶ 276-14
			¶ 277-7
	RCA	CDP1802A	1279-3
			¶ 263-17
			¶ 269-1
			¶ 270-12
			¶ 271-13
			¶ 272-15
			¶ 273-4
			¶ 275-4
			¶ 275-11
			¶ 276-13
			¶ 276-14
			¶ 277-7
	RCA	**CDP1802AC**	★ **1591**
			1340-10
			¶ 263-17
			¶ 269-1
			¶ 270-12
			¶ 271-13
			¶ 272-15
			¶ 273-4
			¶ 275-4
			¶ 275-11
			¶ 276-13
			¶ 276-14
			¶ 277-7
	RCA	CDP1802AC	1279-4
			¶ 263-17
			¶ 269-1
			¶ 270-12
			¶ 271-13
			¶ 272-15
			¶ 273-4
			¶ 275-4
			¶ 275-11
			¶ 276-13
			¶ 276-14
			¶ 277-7
	RCA	**CDP1802BC**	★ **1591**
			1340-11
			¶ 263-17
			¶ 269-1
			¶ 270-12
			¶ 271-13
			¶ 272-15
			¶ 273-4
			¶ 275-4
			¶ 275-11
			¶ 276-13
			¶ 276-14
			¶ 277-7
	RCA	CDP1802BC	1279-5
			¶ 263-17
			¶ 269-1
			¶ 270-12
			¶ 271-13
			¶ 272-15
			¶ 273-4
			¶ 275-4
			¶ 275-11
			¶ 276-13
			¶ 276-14
			¶ 277-7
	RCA	**CDP1802C**	★ **1591**
			1279-6
			¶ 263-17
			¶ 269-1
			¶ 270-12
			¶ 271-13
			¶ 272-15
			¶ 273-4
			¶ 275-4
			¶ 275-11
			¶ 276-13
			¶ 276-14
			¶ 277-7
		CDP1802M	★ **1591**
			(Continued)

Base Number	Source	Device	Page-Line
1802	**RCA**	**CDP1802M**	**1279-7**
			¶ 263-17
			¶ 269-1
			¶ 270-12
			¶ 271-13
			¶ 272-15
			¶ 273-4
			¶ 275-11
			¶ 276-13
			¶ 276-14
			¶ 277-7
1804	**RCA**	**CDP1804AC**	★ **1591**
			1339-127
			¶ 264-4
			¶ 272-16
			¶ 275-1
	RCA	CDP1804AC	1279-8
			¶ 264-4
			¶ 272-16
			¶ 275-1
	RCA	**CDP1804PC**	★ **1591**
			1339-128
			¶ 272-16
			¶ 275-1
18042	RCA	CDP18042CD	3761-1
1805	Lambda	LAS1805	3226-32
	RCA	**CDP1805AC**	★ **1591**
			1340-2
			¶ 264-4
			¶ 265-1
			¶ 272-16
			¶ 274-16
	RCA	CDP1805AC	1279-9
			¶ 264-4
			¶ 265-1
			¶ 272-16
			¶ 274-16
	RCA	**CDP1805C**	★ **1591**
			1279-10
			¶ 272-16
			¶ 274-16
18052	Lambda	LAS18052	3226-63
1806	Lambda	LAS1806	3226-79
	RCA	**CDP1806AC**	★ **1591**
			1340-1
	RCA	CDP1806AC	1279-11
	RCA	**CDP1806C**	★ **1591**
			1279-12
	Xycom	1806A	1961-36
1808	Lambda	LAS1808	3226-93
181	Intersil	DG181A	2615-110
			2615-114
		DG181B	2615-126
			2616-2
		DGM181B	2615-27
		IH181C	2615-127
			2616-3
		IH181M	2615-111
			2615-115
	National	AM181	2615-112
			2615-116
	Siemens	FZH181	602-25
	Siliconix	**DG181A**	★ **3077**
			2615-113
			2615-117
			¶ 291-11
			¶ 291-15
		DG181B	★ **3077**
			2615-128
			2616-4
			¶ 291-11
			¶ 291-15
1810	Lambda	LAS1810	3226-108
	Xycom	1810Z	1961-37
1812	Analogic	MP1812A	2652-40
	Lambda	LAS1812	3227-3
	National	LM1812	3169-4
		M1812	3238-99
1814	Analogic	MP1814	2657-37
1815	Lambda	LAS1815	3227-54
1818	**Harris**	**HI1818A-2**	★ **2903**
			2623-73
		HI1818A-5	★ **2903**
			2623-74
			(Continued)

Base Number	Source	Device	Page-Line
1818	Lambda	LAS1818	3227-83
	National	LM1818	3169-120
1819	National	LM1819	3232-32
182	Datel	VR-182A	3236-81
		VR-182B	3236-82
		VR-182C	3236-83
	Intersil	DG182A	2616-17
			2616-21
		DG182B	2616-35
			2616-39
		DGM182A	2615-28
		DGM182B	2615-62
		IH182C	2616-36
			2616-40
		IH182M	2616-18
			2616-22
	National	AM182	2616-16
			2616-20
	Siliconix	**DG182A**	★ **3077**
			2616-19
			2616-24
		DG182B	★ **3077**
			2616-38
			2616-42
	TI	TL182C	2616-47
		TL182I	2616-48
		TL182M	2616-26
1820	Lambda	LAS1820	3227-100
	Western	WD1820	4467-13
1821	National	LM1821	3167-143
	RCA	**CDP1821**	★ **1594**
			588-17
	RCA	CDP1821	3774-108
			1340-60
	RCA	**CDP1821C**	★ **1594**
			3775-6
	RCA	CDP1821C	1340-61
1822	Hughes	HCMP1822C	588-27
			1340-56
		HMMP1822C	588-28
			3773-64
			1340-57
	National	LM1822	3172-116
	RCA	**CDP1822**	★ **1594**
			588-37
			¶ 276-12
			¶ 323-9
	RCA	CDP1822	3773-22
			¶ 276-12
			¶ 323-9
			1340-58
			¶ 276-12
			¶ 323-9
	RCA	**CDP1822C**	★ **1594**
			588-38
			¶ 276-12
			¶ 323-9
	RCA	CDP1822C	3773-65
			¶ 276-12
			¶ 323-9
			1340-59
			¶ 276-12
			¶ 323-9
1823	Hughes	HCMP1823C	588-19
	RCA	**CDP1823**	★ **1594**
			588-20
	RCA	CDP1823	3771-116
			1340-54
	RCA	**CDP1823C**	★ **1594**
			3771-124
	RCA	CDP1823C	1340-55
1824	Hughes	HCMP1824	587-158
			3771-64
			1340-47
		HCMP1824C	587-159
			3771-68
			1340-48
		HMMP1824	587-160
			3771-65
			1340-49
		HMMP1824C	587-161
			3771-69
			1340-50
	Lambda	LAS1824	3227-117
	RCA	**CDP1824**	★ **1594**
			587-162
			(Continued)

Base Number	Source	Device	Page-Line
1824	**RCA**	**CDP1824**	¶ 276-10
			¶ 323-8
	RCA	CDP1824	3771-66
			¶ 276-10
			¶ 323-8
			1340-51
			¶ 276-10
			¶ 323-8
	RCA	**CDP1824C**	★ **1594**
			587-163
			¶ 276-10
			¶ 323-8
	RCA	CDP1824C	3771-67
			¶ 276-10
			¶ 323-8
			1340-52
			¶ 276-10
			¶ 323-8
1826	**RCA**	**CDP1826C**	★ **1594**
			3771-94
	RCA	CDP1826C	1340-53
1828	**Harris**	**HI1828A-2**	★ **2903**
			2622-109
		HI1828A-5	★ **2903**
			2622-110
	Lambda	LAS1828	3227-122
	National	LM1828	3170-120
	Western	WD1828/40	4467-14
183	Intersil	DG183A	2620-12
			2620-16
		DG183B	2620-13
			2620-17
	SiliconSys	SSI183	3238-100
	Siliconix	**DG183A**	★ **3079**
			2620-14
			2620-18
		DG183B	★ **3079**
			2620-15
			2620-19
1830	National	LM1830	3233-97
1831	Hughes	HCMP1831	3783-12
			1340-64
		HCMP1831C	3783-19
			1340-65
		HMMP1831	3783-14
			1340-68
		HMMP1831C	3783-21
			1340-69
	RCA	**CDP1831**	★ **1593**
			3783-16
			¶ 276-11
			¶ 324-7
	RCA	CDP1831	1340-72
			¶ 276-11
			¶ 324-7
	RCA	**CDP1831C**	★ **1593**
			3783-23
			¶ 276-11
			¶ 324-7
	RCA	CDP1831C	1340-73
			¶ 276-11
			¶ 324-7
1832	Hughes	HCMP1832	3783-13
			1340-66
		HCMP1832C	3783-20
			1340-67
		HMMP1832	3783-15
			1340-70
		HMMP1832C	3783-22
			1340-71
	RCA	**CDP1832**	★ **1593**
			3783-17
			¶ 276-11
			¶ 324-7
	RCA	CDP1832	1340-74
			¶ 276-11
			¶ 324-7
	RCA	**CDP1832C**	★ **1593**
			3783-24
			¶ 276-11
			¶ 324-7
	RCA	CDP1832C	1340-75
			¶ 276-11
			¶ 324-7
1833	Hughes	HCMP1833	3783-50
			1340-76
			(Continued)

¶ Indicates page number in Application Note Directory.
★ Indicates addition data is provided on the page noted.

ABBREVIATIONS OF COMPANY NAMES

Action Ins	Action Instruments
AD	Analog Devices
ADT	Advanced Digital Technology
Advent	Advent Products, Inc.
Alphatron	Alphatron
AMA	American Automation
AMD	Advanced Micro Devices
AMI	American Microsystems, Inc.
Amperex	Amperex Electronic Corp.
Analogic	Analogic
Analog Sys	Analog Systems
APC	Applied Micro Circuits
Apex	Apex Microtechnology
APM	Applied Microsystems Corp.
Appl Sys	Applied Systems Corp.
APT	Applied Microtechnology
Aptek	Aptek Microsystems
Array Tech	Array Technology
AWI	AWI Electronics
Barvon	Barvon Research
Bedford	Bedford Computer Systems Inc.
Burr-Brown	Burr-Brown
CAE	Computer Aided Engineering
Cal Devices	California Devices
Cermetek	Cermetek
CGRS	CGRS Microtech Inc.
Cherry	Cherry Semiconductor
CIC	Custom Integrated Circuits
CirTech	Circuit Technology
Citel	Citel
Comlinear	Comlinear Corporation
CMA	Custom MOS Arrays
Comark	Comark Corp.
Comdial	Comdial Semiconductor
Comp Auto	Computer Automation
Compas	Compas Microsystems
Cont Logic	Control Logic Inc.
Control Sys	Control Systems Microsystems Div.
CreMicro	Creative Micro Systems
Cromemco	Cromemco, Inc.
Cubit	Cubit Inc.
Curtis	Curtis Electro Devices, Inc.
Cybernetic	Cybernetic Micro Systems
Cybersys	Cybersystems
Cybertek	Cybertek Inc.
Data General	Data General
Data I/O	Data I/O
Data Trans	Data Translation
Datel	Datel
Datricon	Datricon Corporation
DDC	Data Devices Corporation
DEC	Digital Equipment Corporation
Die-Tech	Die-Tech
Digelec	Digelec Corp.
Digitek	Digitek, Inc.
Dionics	Dionics Inc.
Dist Comp	Distributed Computer Systems
Divers Tech	Diversified Technology
E-HI	E-H International, Inc.
EDI	Electronic Designs Inc.
Elind	Elind Elettronica Industriale
EMM-SESCO	EEM-SESCO
Emulogic	Emulogic Inc.
ETI Micro	ETI Micro
Exar	Exar Integrated Systems
Exel	Exel Microelectronics
Fairchild	Fairchild
Ferranti	Ferranti Electric
Force	Force Computers
Fujitsu A	Fujitsu America
Fujitsu	Fujitsu Microelectronics, Inc.
GI	General Instrument
GTE Micro	GTE Microcircuits
Harris	Harris Semiconductor
Heurikon	Heurikon Corp.
Hilevel	Hilevel Technology, Inc.
Hitachi	Hitachi America, Ltd.
Holt	Holt Inc.
HP	Hewlett-Packard
Hughes	Hughes Aircraft, Solid State Products
Hybrid Sys	Hybrid Systems
HyComp	HyComp
ICC	International Cybernetics
IDT	Integrated Device Technology
IMI	International Microcircuits, Inc.
IMP	International Microelectronic Products
IMS	Industrial MicroSystems Inc.
Infosphere	Infosphere
Inmos	Inmos
IntCirEng	Integrated Circuit Engineering
IntCirSys	Integrated Circuit Systems
IntCompSys	Integrated Computer Systems
Int Tech	Integrated Technology Corp.
Intech	Intech Microcircuits Div.
Intel	Intel
Interdesign	Interdesign
Intersil	Intersil
Intronics	Intronics
ITT	ITT Semiconductors
Kinetic Sys	Kinetic Systems
Kontron	Kontron Electronics
Lambda	Lambda Semiconductor
Linear Tech	Linear Technology
LSI Comp	LSI Computer Systems
LSI Logic	LSI Logic Corporation
Master Logic	Master Logic Corporation
Matrix	Matrix Corp.
Matrox	Matrox Electronic Systems
Maxim	Maxim Integrated Products
MCC	Micro-Computer Control
MCE	MCE Electronics
Micrel	Micrel
Micro Innov	Micro Innovators
Micropac	Micropac Industries
Micro Net	Micro Networks
Micro Pwr	Micro Power Systems
Micro Sci	Micro Sciences Corp.
Micro Tech	Microcircuits Technology
Micro-Link	Micro-Link Corporation
Micron	Micron Technology
MilerTron	MilerTronics
Miller	Miller Technology
Mitel	Mitel Semiconductor
Mitsubishi	Mitsubishi Electronics
MMI	Monolithic Memories, Inc.
Mostek	Monolithic Systems Corp.
Motorola	Mostek
MRC	Motorola Semiconductor
Murray	MRC Systems
Monosil	Murray Consulting
National	National Semiconductor
NCM	NCM Corp.
NCR	NCR Corp., Microelectronics Division
NEC	NEC Electronics
Nitron	Nitron
OAE	Oliver Advanced Engineering
Octagon	Octagon Systems Corp.
OEI	Optical Electronics Inc.
Ohio Sci	Ohio Scientic
OKI	OKI Semiconductor
Omnibyte	Omnibyte Corp.
Onset	Onset Computer Corp.
Panasonic	Panasonic
Pico Design	Pico Design
Polycore	Polycore Electronics
Plessey	Plessey Semiconductors
PMI	Precision Monilithics, Inc.
PragDes	Pragmatic Design Inc.
Pro-Log	Pro-Log Corp.
Quay	Quay Corp.
Raytheon	Raytheon Semiconductor
RCA	RCA Solid State Division
RCI Data	RCI Data
RELMS	Relational Memory Systems
Reticon	Reticon
RIFA	RIFA
Rockwell	Rockwell, Microelectronic Devices
RTC	Riehl Time Corporation
Sanyo	Sanyo
SBE	SBE, Inc.
SEEQ	SEEQ Technology, Inc.
SPI	Semi Processes Inc.
Siemens	Siemens
Si-Fab	Si-Fab
Signetics	Signetics
SGS	SGS Semiconductor
Sharp	Sharp
Silicon G	Silicon General
Siliconix	Siliconix
Silicon Sys	Silicon Systems Inc.
Siltronics	Siltronics
SMC	Standard Microsystems Corp.
S MOS	S MOS Systems
Solarise	Solarise Enterprises
Solitron	Solitron Devices
Sprague	Sprague Electric Company
SSM	Solid State Micro Technology for Music
SSS	Solid State Scientific
Stag	Stag Microsystems
STC	Storage Technology Corp.
STD	STD Microsystems
Struc Des	Structured Design Inc.
Stynetic	Stynetic Systems
Sunrise	Sunrise Electronics
Sunshine	Sunshine Semiconductor
Supertex	Supertex Inc.
Symtek	Symtek Corp.
Synertek	Synertek
Sys Innov	Systems Innovations
Tau Zero	Tau Zero Inc.
Technitrol	Technitrol
Tektronix	Tektronix
Teledyne C	Teledyne Crystalonics
Teledyne P	Teledyne Philbrick
Teledyne S	Teledyne Semiconductor
Telefunken	Telefunken
Telmos	Telmos
Teltone	Teltone Corporation
TI	Texas Instruments
Third Domain	Third Domain
Thomson-CSF	Thomson-CSF Components Corp.
Toshiba	Toshiba America
Trans-Data	Trans-Data
TRW	TRW LSI Products
Unitrode	Unitrode
Universal	Universal Semiconductor, Inc.
Varix	Varix Corp.
VLSI Design	VLSI Design Associates
VTI	VLSI Technology, Inc.
Votrax	Votrax
Weitek	Weitek Corporation
Western	Western Digital
Wintek	Wintek Corp.
Xicor	Xicor, Inc.
Xycom	Xycom
Zendex	Zendex Corp.
Zilog	Zilog
ZyMOS	ZyMOS Corporation
Zytrex	Zytrex Corp.

IC MASTER BELONGS ON YOUR BOOKSHELF

If you use IC MASTER frequently, you can obtain your own copy by ordering now. Use the order cards contained in this publication, or order by telephone as described below.

IC MASTER is a two-volume set of technical data carefully organized to direct the engineer to the integrated circuits and related products that are closest to his specific needs. It is the surest way to find the optimum device to answer an engineering design requirement. By ordering now, you won't have to borrow or search for IC MASTER the next time you need it.

Typical Use of IC MASTER

Can an engineer find out who makes a 64K dynamic RAM with an access time of 120 nanoseconds or faster in less than 30 seconds?
He can if he turns to the Memory section of IC MASTER and looks for the 64K organization (words and bits per word) that he needs.
Because each device is listed in order of access time, he can easily determine the devices that satisfy his speed requirements.

In the United States only:

You can order IC MASTER simply by charging it to your VISA or Master Card credit card. To place your order, call now: (516) 222-2500.
Ask for Extension 314.

ORDER YOUR COPY NOW

Base Number	Source	Device	Page-Line
1833	Hughes	HCMP1833C	3783-72
			1340-77
		HMMP1833	3783-52
			1340-80
		HMMP1833C	3783-74
			1340-81
	RCA	**CDP1833**	**★1593**
			3783-54
			¶ 324-8
	RCA	CDP1833	1340-84
	RCA	**CDP1833C**	**★1593**
			3783-70
			¶ 324-8
	RCA	CDP1833C	1340-85
1834	Hughes	HCMP1834	3783-51
			1340-78
		HCMP1834C	3783-73
			1340-79
		HMMP1834	3783-53
			1340-82
		HMMP1834C	3783-75
			1340-83
	RCA	**CDP1834**	**★1593**
			3783-55
			¶ 324-8
	RCA	CDP1834	1340-86
	RCA	**CDP1834C**	**★1593**
			3783-71
			¶ 324-8
	RCA	CDP1834C	1340-87
	Unitrode	**UC1834**	**★3710**
			3234-131
1835	Hughes	HCMP1835	1340-88
		HCMP1835C	1340-89
		HMMP1835	1340-90
		HMMP1835C	1340-91
	RCA	**CDP1835C**	**★1593**
			3783-120
	RCA	CDP1835C	1340-94
1836	Hughes	HMMP1836	1340-92
		HMMP1836C	1340-93
1837	National	LM1837	3165-120
	RCA	**CDP1837C**	**★1593**
			3785-36
	RCA	CDP1837C	1340-95
184	Intersil	DG184A	2620-33
			2620-37
		DG184B	2620-46
			2620-50
		IH184C	2620-47
			2620-51
		IH184M	2620-34
			2620-38
	National	AM184	2620-35
			2620-39
	SiliconSys	SSI184	3238-101
	Siliconix	**DG184A**	**★3079**
			2620-36
			2620-40
		DG184B	**★3079**
			2620-48
			2620-52
1840	**Harris**	**HS1840RH**	**★4735**
			2624-82
	Mostek	MKA1840	4467-6
	Telmos	TM1840	2642-22
	Unitrode	**UC1840**	**★3709**
			3231-55
			¶ 312-3
		UC1840/883B	**★3709**
			¶ 312-3
1842	**Unitrode**	**UC1842**	**★3709**
			3231-56
		UC1842/883B	**★3709**
1846	**Unitrode**	**UC1846**	**★3709**
			3232-123
			¶ 311-16
		UC1846/883B	**★3709**
			¶ 311-16
1847	**Unitrode**	**UC1847**	**★3709**
			3232-124
		UC1847/883B	**★3709**
1848	National	LM1848	3170-121
185	Intersil	DG185A	2620-61
			2620-65
		DG185B	2620-73
			(Continued)

Base Number	Source	Device	Page-Line
185	Intersil	DG185B	2620-77
		IH185C	2620-74
			2620-78
		IH185M	2620-62
			2620-66
	LinearTech	LM185-1	3236-57
	National	AM185	2620-60
			2620-64
		LM185	3236-64
		LM185-1	3236-77
		LM185-2	3236-118
	Siemens	FZH185	602-26
	Siliconix	**DG185A**	**★3079**
			2620-63
			2620-67
		DG185B	**★3079**
			2620-76
			2620-80
	TI	TL185C	2620-86
		TL185I	2620-87
		TL185M	2620-85
1851	Hughes	HMMP1851	1340-39
		HMMP1851C	1340-40
	National	LM1851	3173-35
	RCA	**CDP1851**	**★1595**
			1340-41
			¶ 267-17
			¶ 267-18
		CDP1851C	**★1595**
			1340-42
			¶ 267-17
			¶ 267-18
	Western	CP1851	1348-140
1852	Hughes	HCMP1852	594-184
			1340-144
		HCMP1852C	594-185
			1340-145
		HMMP1852	594-186
			1340-146
		HMMP1852C	594-187
			1340-147
	RCA	**CDP1852**	**★1595**
			594-188
			¶ 268-1
			¶ 275-11
	RCA	CDP1852	1340-148
			¶ 268-1
			¶ 275-11
1853	Hughes	HCMP1853	578-19
			1340-33
		HCMP1853C	578-20
			1340-34
		HMMP1853	578-21
			1340-35
		HMMP1853C	578-22
			1340-36
	RCA	**CDP1853**	**★1595**
			578-23
	RCA	CDP1853	1340-37
	RCA	**CDP1853C**	**★1595**
			578-24
	RCA	CDP1853C	1340-38
1854	Hughes	HCMP1854A	1340-98
		HCMP1854AC	1340-99
		HMMP1854	593-1
		HMMP1854A	1340-100
		HMMP1854AC	1340-101
		HMMP1854C	593-2
	RCA	**CDP1854A**	**★1595**
			593-4
			¶ 268-2
	RCA	CDP1854A	1340-102
	RCA	**CDP1854AC**	**★1595**
			2686-67
			¶ 268-2
	RCA	CDP1854AC	1340-103
1855	Hughes	HCMP1855	1340-27
		HCMP1855C	1340-28
		HMMP1855	1340-29
		HMMP1855C	1340-30
	RCA	**CDP1855**	**★1595**
			1340-31
			¶ 276-9
		CDP1855C	**★1595**
			1340-32
			¶ 276-9

Base Number	Source	Device	Page-Line
1856	Hughes	HCMP1856	1340-116
		HCMP1856C	1340-117
		HMMP1856	1340-118
		HMMP1856C	1340-119
	RCA	**CDP1856**	**★1595**
			1340-120
			¶ 276-13
		CDP1856C	**★1595**
			1340-121
			¶ 276-13
1857	Hughes	HCMP1857	1340-122
		HCMP1857C	1340-123
		HMMP1857	1340-124
		HMMP1857C	1340-125
	RCA	**CDP1857**	**★1595**
			1340-126
			¶ 276-13
		CDP1857C	**★1595**
			1340-127
			¶ 276-13
1858	Hughes	HCMP1858	1340-128
		HCMP1858C	1340-129
		HMMP1858	1340-130
		HMMP1858C	1340-131
	RCA	**CDP1858**	**★1595**
			1340-132
		CDP1858C	**★1595**
			1340-133
1859	Hughes	HCMP1859	1340-134
		HCMP1859C	1340-135
		HMMP1859	1340-136
		HMMP1859C	1340-137
	RCA	**CDP1859**	**★1595**
			1340-138
		CDP1859C	**★1595**
			1340-139
186	**AMD**	**iAPX186**	**★1430**
			1348-141
	AMD	iAPX186	1283-32
	Intel	iAPX186	1348-142
			1285-16
		iAPX186/20	1348-144
		iAPX186/50	1285-17
	Intersil	DG186A	2618-7
			2618-11
		DG186B	2618-8
			2618-12
	Siliconix	**DG186A**	**★3078**
			2618-9
			2618-13
		DG186B	**★3078**
			2618-10
			2618-14
1861	Hughes	HMMP1861	1340-106
		HMMP1861C	1340-107
	RCA	**CDP1861**	**★1595**
			1340-108
		CDP1861C	**★1595**
			1340-109
1862	**RCA**	**CDP1862**	**★1595**
			1340-12
		CDP1862C	**★1595**
			1340-13
	Xycom	1862¢A	1955-38
1863	National	LM1863	3167-106
	RCA	**CDP1863**	**★1595**
			1340-45
		CDP1863C	**★1595**
			1340-46
	SMC	COM1863	2686-53
	Western	TR1863-00	2686-63
		TR1863-02	2686-69
		TR1863-04	2686-79
1864	**RCA**	**CDP1864**	**★1595**
			1340-96
		CDP1864C	**★1595**
			1340-97
1865	National	LM1865	3168-60
	Western	TR1865-00	2686-64
			¶ 285-9
		TR1865-02	2686-70
			¶ 285-9
		TR1865-04	2686-80
			¶ 285-9
1866	National	LM1866	3168-1
	RCA	**CDP1866**	**★1595**
			(Continued)

Base Number	Source	Device	Page-Line
1866	**RCA**	**CDP1866**	**1340-16**
		CDP1866C	**★1595**
			1340-17
1867	**RCA**	**CDP1867**	**★1595**
			1340-18
		CDP1867C	**★1595**
			1340-19
1868	National	LM1868	3167-144
	RCA	**CDP1868**	**★1595**
			1340-20
		CDP1868C	**★1595**
			1340-21
	Xycom	1868¢A	1965-36
1869	**RCA**	**CDP1869C**	**★1595**
			1340-110
			¶ 272-12
			¶ 277-7
			¶ 285-7
			¶ 316-6
			¶ 319-9
187	Intersil	DG187A	2618-28
			2618-32
		DG187B	2618-41
			2618-45
		IH187C	2618-42
			2618-46
		IH187M	2618-29
			2618-33
	National	AM187	2618-30
			2618-34
	Siemens	S187A	3214-136
	Siliconix	**DG187A**	**★3078**
			2618-31
			2618-35
		DG187B	**★3078**
			2618-43
			2618-47
1870	National	LM1870	3168-136
	RCA	**CDP1870C**	**★1595**
			1340-111
			¶ 271-5
			¶ 272-12
			¶ 277-7
			¶ 285-7
			¶ 316-6
			¶ 319-9
	Signetics	LM1870	3168-154
1871	National	LM1871	3169-33
	RCA	**CDP1871A**	**★1595**
			2667-8
	RCA	CDP1871A	1340-14
	RCA	**CDP1871AC**	**★1595**
			2667-9
	RCA	CDP1871AC	1340-15
1872	National	LM1872	3169-34
	RCA	**CDP1872C**	**★1595**
			594-189
	RCA	CDP1872C	1340-149
	Western	CR1872	1339-49
1873	**RCA**	**CDP1873C**	**★1595**
			578-167
	RCA	CDP1873C	1340-115
1874	**RCA**	**CDP1874C**	**★1595**
			595-1
	RCA	CDP1874C	1340-150
1875	National	LM1875	3165-24
	RCA	**CDP1875C**	**★1595**
			595-2
	RCA	CDP1875C	1340-151
1876	**RCA**	**CDP1876C**	**★1595**
			1340-112
			¶ 271-5
			¶ 272-12
			¶ 277-7
			¶ 316-6
1877	National	LM1877	3165-69
	RCA	**CDP1877**	**★1595**
			1340-43
		CDP1877C	**★1595**
			1340-44
1878	RCA	CD1878	1340-113
	RCA	**CDP1878C**	**★1595**
			1340-114
			¶ 254-7
1879	National	LM1879	3164-84
	RCA	**CDP1879**	**★1595**
			(Continued)

Arranged alphanumerically from left to right.

Base Number	Source	Device	Page-Line
1879	**RCA**	**CDP1879**	**1340-62**
			¶ 254-7
		CDP1879C-1	**★1595**
			1340-63
			¶ 254-7
188	Cherry	CS188	3239-4
	Intel	iAPX188	1348-118
			1273-6
		iAPX188/20	1349-104
	Intersil	DG188A	2618-57
			2618-61
		DG188B	2618-70
			2618-74
		IH188C	2618-71
			2618-75
		IH188M	2618-58
			2618-62
	National	AM188	2618-56
			2618-60
	Siliconix	**DG188A**	**★3078**
			2618-59
			2618-63
		DG188B	**★3078**
			2618-73
			2618-77
	TI	TL188C	2618-82
		TL188I	2618-83
		TL188M	2618-64
1880	National	LM1880	3171-66
1881	**RCA**	**CDP1881**	**★1595**
			1340-22
		CDP1881C	**★1595**
			1340-23
	Western	DM1881	1348-131
1882	**RCA**	**CDP1882**	**★1595**
			1340-24
			1340-140
		CDP1882C	**★1595**
			1340-25
			1340-141
1883	RCA	CDP1883	1340-26
			1340-142
		CDP1883C	1340-143
	Western	DM1883	1348-132
			1355-12
1886	National	LM1886	3172-117
1889	National	LM1889	3172-118
			3173-23
189	Cherry	CS189	3173-133
	Intersil	DG189A	2619-10
			2619-14
		DG189B	2619-11
			2619-15
	Siliconix	**DG189A**	**★3078**
			2619-12
			2619-16
		DG189B	**★3078**
			2619-13
			2619-17
1893	**National**	**LM1893**	**★3539**
			3166-12
			3239-115
1894	National	LM1894	3164-56
1895	National	LM1895	3165-70
1896	National	LM1896	3165-71
1897	National	LM1897	3165-160
18A05	Lambda	LAS18A05	3226-33
18A12	Lambda	LAS18A12	3227-4
18A15	Lambda	LAS18A15	3227-55
18L4	**MMI**	**HAL18L4C**	**★4776**
			★4783
			4483-105
		HAL18L4M	**★4776**
			★4783
			4484-7
		PAL18L4C	**★4768**
			4481-54
		PAL18L4M	**★4768**
			4481-55
	National	DMPAL18L4C	4481-66
		DMPAL18L4M	4481-67
	SI-Fab	**HCT18L4**	**★4827**
			4483-81
18S008	RCA	CDP18S008	1815-14
18S030	**TI**	**TBP18S030**	**★ 542**
			★4237
			(Continued)

Base Number	Source	Device	Page-Line
18S030	**TI**	**TBP18S030**	**3760-33**
		TBP18S030M	**★ 542**
			★4237
			3760-47
18S600	RCA	CDP18S600	1955-4
18S601	RCA	CDP18S601A	1957-28
18S602	RCA	CDP18S602	1957-26
18S603	RCA	CDP18S603A	1957-29
18S604	RCA	CDP18S604B	1957-30
18S605	RCA	CDP18S605	1957-27
18S606	RCA	CDP18S606	1957-32
18S607	RCA	CDP18S607	1957-31
18S608	RCA	CDP18S608	1957-33
18S609	RCA	CDP18S609	1957-34
18S610	RCA	CDP18S610	1957-35
18S693	RCA	CDP18S693	1815-15
			¶ 278-11
18S694	RCA	CDP18S694	1815-16
18S695	RCA	CDP18S695	1815-17
18SA030			
	TI	**TBP18SA030M**	**★ 542**
			★4237
			3760-41
18SA30	TI	TBP18SA30	3760-31
19	Lambda	LAS19U	3228-46
190	Intersil	DG190A	2619-18
			2619-23
		DG190B	2619-19
			2619-24
		IH190M	2619-20
			2619-25
	National	AM190	2619-21
			2619-26
	SGS	M190	2667-3
	Siemens	UAA190	3171-128
	Siliconix	**DG190A**	**★3078**
			2619-22
			2619-27
		DG190B	**★3078**
			2619-28
			2619-30
1900	ITT	SAA1900	3167-97
	TI	LM1900	3180-98
1901	**Unitrode**	**UC1901**	**★3710**
			3235-149
			¶ 311-15
1902	Hitachi	HA1902	2684-31
1903	**Unitrode**	**UC1903**	**★3710**
			3235-150
1905	Lambda	LAS1905	3222-14
		LAS1905B	3222-15
	SGS	TDA1905	3164-171
1908	SGS	TDA1908	3164-172
191	Cherry	CS191	3236-35
	Intersil	DG191A	2619-33
			2619-37
		DG191B	2619-40
			2619-44
		IH191C	2619-41
			2619-45
		IH191M	2619-34
			2619-38
	National	AM191	2619-32
			2619-36
	SGS	M191	3171-125
	Siemens	FZH191	601-89
	Siliconix	**DG191A**	**★3078**
			2619-35
			2619-39
		DG191B	**★3078**
			2619-43
			2619-47
	Telefunken	U191	3170-112
	TI	TL191C	2619-49
		TL191I	2619-50
		TL191M	2619-48
1910	SGS	TDA1910	3164-173
19100	DDC	SDC-19100	3237-143
1912	Lambda	LAS1912	3224-4
		LAS1912B	3224-5
1914	Analogic	MP1914A	2657-38
		MP1914TC	2657-39
1915	Analogic	MP1915A	2658-5
		MP1915TC	2658-6
	Lambda	LAS1915	3224-103
		LAS1915B	3224-104

Base Number	Source	Device	Page-Line
1916	Analogic	MP1916A	2658-17
		MP1916TC	2658-18
192	National	LM192	3156-4
			3206-20
	SGS	M192	3171-126
19200	Thomson-CSF		
		SFF19200	3217-55
1926	Analogic	MP1926A	2658-9
		MP1926S	2658-10
193	Fairchild	uA193	3161-31
		uA193A	3160-52
	National	AM193	2617-83
		LM193	3161-32
		LM193A	3160-53
	SGS	M193	3171-136
			¶ 320-5
	Signetics	LM193	3161-33
		LM193A	3160-54
	Telefunken	U193	3172-57
	TI	LM193	3161-34
	Western	WD193X-00/10	
			2686-30
		WD193X-01/11	
			2686-31
		WD193X-02/12	
			2686-32
		WD193X-03/13	
			2686-33
1931	Western	WD1931	2685-15
1933	Western	WD1933	1346-65
1936	Analogic	MP1936	2658-8
1938	NEC	MC1938	3216-146
194	National	AM194	2617-95
		LM194	3157-69
	SGS	L194-12	3223-65
		L194-15	3224-39
		L194-5	3221-45
1941	Western	BR1941	640-11
		BR1941-00	2685-44
		BR1941-02	2685-45
		BR1941-04	2685-49
		BR1941-05	2685-46
		BR1941-06	2685-50
1943	Western	WD1943	640-12
		WD1943-00	2685-41
		WD1943-02	2685-42
		WD1943-04	2685-47
		WD1943-05	2685-43
		WD1943-06	2685-48
1945	Western	WD1945	2685-59
1949	National	LM1949	3166-10
195	National	LM195	3232-93
	Siemens	FZH195	601-90
1950	ITT	TDA1950	3171-80
196	Micropac	LML196-05	3222-25
		MLM196-12	3224-9
		MLM196-15	3224-108
	National	LM196	3228-27
19680	**Raytheon**	**19680**	**★4130**
197	AnalogSys	MW197	3220-12
1970	**Signetics**	**SMSFT1970**	**★2052**
1971	Western	UC1971	1348-130
1976	Panasonic	MN1976	3173-102
	TI	TMS1976	3173-114
			1339-17
198	AMD	LF198	3237-158
	Fairchild	uA198	3238-10
	National	LF198	3238-39
		LF198A	3238-40
	Signetics	LF198	3238-66
1981	National	LM1981	3167-126
1983	Western	TR1983	2685-64
			1345-52
199	AD	HOS-199SH	3155-28
	LinearTech	LM199	3237-22
	National	LM199	3237-13
			¶ 314-6
			¶ 315-6
		LM199A	3237-14
			¶ 314-6
			¶ 315-6
			¶ 315-6
1993	Western	WD1993-01	2685-12
		WD1993-02	2685-13
		WD1993-03	2685-14

Base Number	Source	Device	Page-Line
2	ActionIns	BC2A	1957-2
	AMI	**UA-2**	**★4619**
			4468-6
	Cromemco	Z-2H	1809-19
	CIC	MSB-2	4473-28
	DataGen	MBC/2	1965-22
	Datel	**FLT-U2**	**★2865**
			3232-19
		FLT-U2M	**★2865**
			3232-20
		SHM-LM-2	**★2864**
			3238-8
	Datel	SHM-LM-2M	3238-9
	Datel	**ST-LSI2**	**★2039**
		VFQ-2	**★2865**
			3239-28
	Emulogic	EMUNET-2	1811-10
	Ferranti	ULA2C	4469-15
			4469-30
		ULA2G	4474-1
		ULA2L	4474-3
		ULA2M	4472-13
			4472-15
		ULA2N	4470-33
			4471-5
		ULA2U	4474-4
		ZNPCM2	3216-160
	Interdesign	ULA2C	4469-16
			4469-31
		ULA2M	4472-14
			4472-16
		ULA2N	4470-34
			4471-6
	Octagon	SYS-2A	1965-4
	RCA	**PaCMOS-2**	**★4824**
			4478-10
		PaCMOS-C2L	**★4824**
			4478-12
		SOS-2	
		Library	**★4824**
			4478-13
	Signetics	**EPL-2**	**★4855**
			4478-17
	STC	MSIV-2	4475-28
	Supertex	HV2	2661-34
		SD2	3173-97
	TeledyneC	CDA2-3	2615-124
2148	AMD	AM2148-55M	3775-105
20	**Burr-Brown**	**MP20**	**★2849**
			2628-35
			¶ 261-3
			¶ 272-5
	Burr-Brown	MP20	1345-39
			1348-60
			1354-100
			¶ 261-3
			¶ 272-5
	DataGen	S/20	1965-13
	Datal/O	20B Universal NMOS Memory Programmer	4351-13
	Datel	**SHM-20C**	**★2864**
			3237-186
		SHM-20M	**★2864**
			3237-187
	Ferranti	ULA20RA	4464-45
			4465-26
		ULA20RB	4468-38
			4469-7
		ULA20RC	4470-25
			4470-51
		ULA20RD	4471-41
			4472-5
	GI	LA20	4466-43
	IntCirSys	IMC-20A	4474-9
		IMC-20B	4474-16
		IMC-20C	4474-8
		IMC-20E	4474-12
		IMC-20F	4474-17
		IMC-20G	4474-13
		IMC-20H	4474-14
		IMC-20J	4474-15
		IMC-20L	4474-18
		IMC	4474-20
			(Continued)

¶ Indicates page number in Application Note Directory.
★ Indicates addition data is provided on the page noted.

Base Number	Source	Device	Page-Line
20	Interdesign	ULA20RA	4464-46
			4465-27
		ULA20RB	4468-39
			4469-8
		ULA20RC	4470-26
			4470-52
		ULA20RD	4471-42
			4472-6
	MCE	MCEA20A	4474-45
		MCEA20AS	4474-46
		MCEA20B	4475-10
		MCEA20BS	4475-11
		MCEA20C	4474-40
		MCEA20CS	4474-41
		MCEA20E	4475-2
		MCEA20ES	4475-3
		MCEA20F	4475-14
		MCEA20FS	4475-15
		MCEA20G	4475-4
		MCEA20GS	4475-5
		MCEA20H	4475-6
		MCEA20HS	4475-7
		MCEA20J	4474-47
		MCEA20JS	4475-1
		MCEA20L	4475-12
		MCEA20LS	4475-13
		MCEA20M	4475-17
		MCEA20MS	4475-18
		MCEA20WS	4475-16
		MCEP20A	4474-39
	MicroTech	SGA20	4462-10
	Mostek	SCU20	1341-58
	PMI	**DAC-20C**	★**3567**
			2643-29
			¶ 281-5
			¶ 283-6
			¶ 284-16
		OP-20B	★**3566**
			3182-63
			¶ 295-3
		OP-20C	★**3566**
			3184-21
			¶ 295-3
		OP-20F	★**3566**
			3182-64
			¶ 295-3
		OP-20G	★**3566**
			3184-22
			¶ 295-3
		OP-20H	★**3566**
			3185-7
			¶ 295-3
	Rockwell	A20XX	1339-110
	Synertek	MDT20	1817-12
	Wintek	**MAI20**	★**2062**
200	AD	ADG200A	2615-57
		ADG200B	2615-73
		ADG200C	2615-74
	Comlinear	CLC200A	3156-81
			3175-103
			3176-51
			3180-151
		CLC200AI	3197-31
		CLC200AM	3156-82
			3175-104
			3176-52
			3180-152
			3197-32
	DataGen	MP/200	1965-18
	Exar	**XR200**	★**3386**
			4471-27
	Exar	XRS200	3214-53
			¶ 310-12
	Fairchild	CET200	3217-53
	Fujitsu	**B200**	★**4637**
			4467-3
	Harris	**HI200-2**	★**2866**
			2615-58
		HI200-5	★**2866**
			2615-75
	Inmos	IMSP200	1349-25
			1352-14
			1352-36
	Intel	UP-200/201	4355-2
	Intersil	**DG200**	★**3031**
			2615-64
			(Continued)

Base Number	Source	Device	Page-Line
200	**Intersil**	**DG200C**	★**3031**
			2615-71
		DG200M	★**3031**
			2615-55
	Intersil	IH200C	2615-69
		IH200M	2615-65
	MicroPwr	**MP200DIA**	★**3047**
			2615-69
		MP200DIB	★**3047**
			2615-76
		MP200DIC	★**3047**
			2615-77
	Motorola	**HDS-200**	★**1919**
			1815-5
		MVME200	★**2041**
	Panasonic	OM200	3164-11
	SGS	L200	3228-43
			¶ 313-11
			¶ 313-12
	Siemens	SDA200	3172-62
	SiliconG	SG200	3228-38
	Siliconix	**DG200A**	★**3077**
			2615-60
			¶ 291-15
		DG200AA	★**3077**
			2615-61
			¶ 291-15
		DG200AB	★**3077**
			2615-78
			¶ 291-15
		DG200AC	★**3077**
			2615-79
			¶ 291-15
		DG200B	★**3077**
			2615-80
			¶ 291-15
		DG200C	★**3077**
			2615-81
			¶ 291-15
	Thomson-CSF		
		TDA200	3228-96
2000	**AMI**	**GA2000**	★**4619**
			4461-54
		GA2000D	★**4619**
			★**4619**
			4462-2
	CalDevices	CDI2000	4470-7
	Cherry	CS2000E	4473-16
	Curtis	PD2000S	4351-4
	Fairchild	**FGE2000**	★**4634**
			4460-14
	Fujitsu	**B2000**	★**4638**
			4460-44
	Fujitsu	C2000	4467-43
	Fujitsu	**C2000H**	★**4639**
			4464-16
	HyComp	M/DA2000	2653-7
	MicroTech	SG2000	4465-45
	National	**MA2000**	★**2047**
	NCM	2000 Series	4478-1
	Plessey	BAA2000	4475-23
	Plessey	**MV2000**	★**4820**
	Plessey	SCD2000H	4460-16
		SCD2000L	4461-40
			4462-24
		SCD2000M	4460-43
	RCA	MS2000	1815-18
		MS2000-Z	1815-19
	Siemens	TDA2000	3164-45
		TUA2000	3172-100
	Signetics	**SMVME2000**	★**2052**
			1967-6
	SSM	SSM2000	3155-119
			¶ 309-7
	Synertek	MDT-2000	1817-11
20000	ZyMOS	Zy20000	4479-1
2001	Aptek	AMS2001	3218-75
	Exar	**XR2001C**	★**3383**
			3158-9
	Motorola	**ULN2001A**	★**3064**
	National	LM2001	3164-85
	NCM	2001Z	3172-36
	Siemens	SDA2001	641-18
			3214-62
	Signetics	ULN2001	3158-46
	SiliconG	SG2001	2679-126
			(Continued)

Base Number	Source	Device	Page-Line
2001	SiliconG	SG2001	3158-49
	Siliconix	**VQ2001**	★**3085**
			2683-22
	Sprague	ULN-2001A	2679-130
			¶ 289-1
			3158-55
		ULS-2001H	2679-133
			3158-60
	TI	ULN2001A	2679-138
			3158-67
	Western	WD2001	640-63
2002	Aptek	AMS2002	3218-76
			¶ 286-17
	Exar	**XR2002C**	★**3383**
			3158-10
	Hitachi	TDA2002	3164-143
	Motorola	TDA2002	3164-144
		TDA2002A	3164-145
	Motorola	**ULN2002A**	★**3064**
	National	LM2002	3164-146
		TDA2002	3164-150
		TDA2002A	3164-151
	NCM	2002Z	3170-44
	RCA	CA2002	3164-153
	SGS	TDA2002	3164-174
		TDA2002A	3164-175
	Siemens	SDA2002	3214-28
	SiliconG	SG2002	2679-146
			3158-50
	Sprague	TDA2002	3164-181
		TDA2002A	3164-182
		ULN-2002A	2679-150
			¶ 289-1
			3158-56
		ULS-2002H	2679-153
			3158-61
	Telefunken	TDA2002	3165-9
		TDA2002A	3165-10
	TI	ULN2002A	2679-156
			3158-68
	Western	WD2002	640-64
2003	**Exar**	**XR2003C**	★**3383**
			3158-11
		XR2003M	★**3383**
			2679-91
	Motorola	**ULN2003A**	★**3064**
	National	TDA2003	3164-152
	SGS	TDA2003	3164-176
	Siemens	TDA2003	3164-179
	Signetics	ULN2003	2679-98
			3158-47
	SiliconG	SG2003	2679-99
			3158-51
	Sprague	TDA2003	3165-1
		ULN-2003A	2679-106
			¶ 289-1
			3158-57
		ULS-2003H	2679-112
			3158-62
	TeledyneP	2003	3155-21
		2003-01	3155-22
	Telefunken	TDA2003	3165-11
	TI	TZ2003	3216-164
		ULN2003A	2679-119
			3158-69
2004	**CMA**	**CMA2004**	★**4630**
			4465-9
	Exar	**XR2004C**	★**3383**
			3158-12
	Intel	**2004**	★**4023**
			3758-39
		2004-2	★**4023**
			3758-38
		2004-3	★**4023**
			3758-42
	Motorola	**ULN2004A**	★**3064**
	RCA	CA2004	3165-26
	SGS	TDA2004	3165-98
	Siemens	SDA2004	2662-134
	Signetics	ULN2004	2679-79
			3158-48
	SiliconG	SG2004	2679-80
	Siliconix	**VQ2004**	★**3085**
			2683-23
	Sprague	ULN-2004A	2679-83
			¶ 289-1
			(Continued)

Base Number	Source	Device	Page-Line
2004	Sprague	ULN-2004A	3158-58
		ULS-2004H	2679-86
			3158-63
	Telefunken	TDA2004	3165-12
	TI	ULN2004A	2679-90
			3158-70
2005	HyComp	M/D2005-1	2645-16
		M/DA2005	2654-42
	National	LM2005	3165-25
			3166-24
	SGS	TDA2005	3165-99
	Siemens	SDA2005	3171-127
	SiliconG	SG2005	2679-100
	Sprague	ULN-2005A	2679-107
			3158-59
		ULS-2005H	2679-113
			3158-64
	Telefunken	TDA2005	3165-102
	TI	ULN2005A	3158-71
2006	Aptek	AMS2006	3218-77
	SGS	TDA2006	3164-177
	Siliconix	**VQ2006**	★**3085**
			2683-24
2008	**CMA**	**CMA2008**	★**4630**
			4465-10
	SGS	TDA2008	3165-55
	Siemens	SDA2008	3169-52
	Sprague	TDA2008	3165-65
	TRW-LSI	**TMC2008**	★**1168**
			571-171
2009	National	AM2009	2622-14
		AM2009C	2622-15
	TRW-LSI	**TMC2009**	★**1169**
			571-158
201	**AD**	**AD201A**	★**3351**
			3191-31
	AD	ADG201A	2616-101
		ADG201B	2616-118
		ADG201C	2616-119
	Analogic	MP201A	3164-44
	Burr-Brown	**OPA201A**	★**2850**
			3187-6
		OPA201B	★**2850**
			3184-26
		OPA201C	★**2850**
			3183-5
		OPA201S	★**2850**
			3184-27
	Fairchild	uA201	3199-63
		uA201AM	3191-33
	Harris	**HI201-2**	★**2868**
			2616-102
		HI201-5	★**2868**
			2616-120
		HI201HS-2	★**2868**
			2616-87
		HI201HS-5	★**2868**
			2616-88
	Intersil	DG201C	2616-109
		DG201M	2616-99
		IH201C	2616-95
		IH201M	2616-89
	MicroPwr	**MP201DIA**	★**3047**
			2616-93
		MP201DIB	★**3047**
			2616-94
	Motorola	LM201A	3191-35
	Motorola	**MVME201**	★**2041**
	National	LM201	3200-1
		LM201A	3191-37
	PMI	SW-201B	2616-66
			2621-15
		SW-201F	2616-72
			2621-17
		SW-201G	2621-19
	RCA	GP201AD	1337-88
	SGS	L201	2679-125
			3158-42
	Siemens	FZH201	601-9
	SiliconG	SG201	3200-2
		SG201A	3191-40
	SiliconSys	**SSI201**	★**3685**
			3219-12
			¶ 299-13
	Siliconix	**DG201A**	★**3077**
			2617-10
			(Continued)

Arranged alphanumerically from left to right

Base Number	Source	Device	Page-Line
201	**Siliconix**	**DG201AA**	★3077
			2617-11
		DG201AB	★3077
			2617-16
		DG201AC	★3077
			2617-17
		DG201AHSA	★3077
			2617-18
		DG201AHSB	★3077
			2617-19
		DG201AHSC	★3077
			2617-20
		DG201B	★3077
			2617-21
		DG201C	★3077
			2617-22
	TauZero	CPU201	1965-26
	TI	LM201A	3191-42
		TC201	3234-37
2010	SGS	TDA2010	3165-56
			¶ 296-15
	SSM	SSM2010	3155-117
	Telmos	TMD2010	3233-56
	TRW-LSI	**TMC2010**	★1170
			571-178
	Western	**WD2010**	★1726
			1354-82
2011	**CMA**	**CMA2011**	★4630
			4465-11
	Exar	**XR2011C**	★3383
			3158-13
	Motorola	MBM2011A	3768-5
	National	LH2011	3203-54
		LH2011B	3204-29
		LH2011C	3204-50
	SiliconG	SG2011	2679-127
	SSM	SSM2011	3169-145
	Sprague	ULN-2011A	2679-131
			3158-72
		ULS-2011H	2679-134
			3158-77
2012	**Exar**	**XR2012C**	★3383
			3158-14
	SiliconG	SG2012	2679-147
	SSM	SSM-2012	2685-67
		SSM2012	3155-118
	Sprague	ULN-2012A	2679-151
			3158-73
		ULS-2012H	2679-135
			3158-78
2013	**Exar**	**XR2013C**	★3383
			3158-15
	SiliconG	SG2013	2679-101
	SSM	SSM2013	3156-128
	Sprague	ULN-2013A	2679-108
			3158-74
		ULS-2013H	2679-114
			3158-79
2014	**Exar**	**XR2014C**	★3383
			3158-16
	Siemens	SDA2014	2661-58
	SiliconG	SG2014	2679-81
	Sprague	ULN-2014A	2679-84
			3158-75
		ULS-2014H	2679-87
			3158-80
2015	**CMA**	**CMA2015**	★4630
			4465-12
	SiliconG	SG2015	2679-102
	SSM	SSM2015	3155-139
	Sprague	ULN-2015A	2679-109
			3158-76
		ULS-2015H	2679-115
			3158-81
2016	**Motorola**	**MCM2016-20**	★4046
			★4052
			3778-125
		MCM2016H-45	★4046
			★4052
			3777-103
			★4046
			★4052
			1343-128
		MCM2016H-55	★4046
			★4052
			3777-108
			(Continued)

Base Number	Source	Device	Page-Line
2016	**Motorola**	**MCM2016H-70**	★4046
			★4052
			3777-123
	National	**MA2016**	★2048
	Toshiba	TMM2016	3778-86
		TMM2016-2	3778-136
	TRW-LSI	**TMC2016**	★1167
			571-166
2016C20			
	SMOS	SRM2016C20	3778-114
2016C25			
	SMOS	SRM2016C25	3779-16
2017	SMC	COM2017	2686-57
		COM2017H	2686-58
2017C20			
	SMOS	SRM2017C20	3778-115
2017C25			
	SMOS	SRM2017C25	3779-17
2018C20			
	SMOS	SRM2018C20	3778-116
2018C25			
	SMOS	SRM2018C25	3779-18
202	Intersil	IH202C	2616-96
		IH202M	2616-90
	National	LM202	3174-35
	PMI	SW-202B	2616-67
			2621-16
		SW-202F	2616-73
			2621-18
	SGS	L202	2679-145
			3158-43
	SiliconG	SG202	3174-34
	SiliconSys	**SSI202**	★3685
			3218-138
			3219-13
	Siliconix	**DG202A**	★3077
			2617-12
		DG202B	★3077
			2617-13
		DG202C	★3077
			2617-23
	TI	TC202	3234-38
2020	AD	AD2020	2635-37
	HybridSys	HS2020	3156-39
	MicroNet	**MN2020**	★3042
			3156-40
	SGS	TDA2020	3165-57
			¶ 296-15
		TDA2020D	3165-58
			¶ 296-15
	SSM	SSM2020	3155-120
			3167-99
			¶ 309-7
2021	SiliconG	SG2021	2679-128
	Sprague	ULN-2021A	2679-132
			3158-82
		ULS-2021H	2679-136
			3158-87
2022	SiliconG	SG2022	2679-148
	SSM	SSM2022	3155-121
			3167-100
	Sprague	ULN-2022A	2679-152
			3158-83
		ULS-2022H	2679-154
			3158-88
2023	SiliconG	SG2023	2679-103
	Sprague	ULN-2023A	2679-110
			3158-84
		ULS-2023H	2679-116
			3158-89
2024	**CMA**	**CMA2024**	★4630
			4465-13
	SiliconG	SG2024	2679-82
	SSM	SSM2024	3156-140
	Sprague	ULN-2024A	2679-85
			3158-85
		ULS-2024H	2679-88
			3158-90
2025	SiliconG	SG2025	2679-104
	Sprague	ULN-2025A	2679-111
			3158-86
		ULS-2025H	2679-117
			3158-91
20254	**RCA**	**PA20254**	★4824
			4467-19

Base Number	Source	Device	Page-Line
203	Plessey	SW203	3172-35
	SGS	L203	2679-97
			3158-44
	SiliconSys	**SSI203**	★3685
2030	SGS	TDA2030	3165-59
	Siemens	TDA2030	3165-61
	SSM	SSM2030	3173-73
			¶ 302-6
	Telefunken	TDA2030	3165-66
2031	SSM	SSM2031	3239-31
	Sprague	ULN-2031A	3158-3
2032	Sprague	ULN-2032A	3158-4
2033	SSM	SSM2033	3173-74
	Sprague	ULN-2033A	3158-5
2035	TeledyneP	2035	3155-30
2038	SSM	SSM2038	3165-194
204	National	LM204	3229-113
	SGS	L204	3158-45
	SiliconG	SG204	3229-114
2040	SGS	TDA2040	3165-60
	SSM	SSM2040	3173-75
			¶ 302-6
2041	**Raytheon**	**RC2041**	★3592
			3206-14
2043	**Raytheon**	**RC2043**	★3592
			3206-16
2044	SSM	SSM2044	3173-76
2045	Sprague	ULS-2045H	3157-33
20450	**RCA**	**PA20450**	★4824
			4467-22
2046	Sprague	ULN-2046A	3157-31
2047	Sprague	ULN-2047A	3157-139
2048	Reticon	RL2048H	3234-76
205	Exar	XR205	3215-20
	National	LM205	3229-41
	Siemens	FZH205	601-10
		TCA205AK	3173-119
	SiliconG	SG205	3229-43
	TauZero	CPU205	1955-15
2050	SSM	SSM2050	3173-77
			¶ 302-6
2051	GI	ER2051	3758-7
		ER2051HR	3758-8
	NCR	NCR2051	3758-9
2054	SGS	TDA2054	3169-116
	Sprague	ULN-2054A	3157-43
2055	GI	ER2055	3758-18
			¶ 319-9
	NCR	NCR2055	3758-19
			3758-46
	SSM	SSM2055	3173-78
2056	SSM	SSM2056	3173-79
206	AnalogSys	MA206	3201-50
	National	LM206	3159-22
	TauZero	CPU206	1955-16
2061	Sprague	ULN-2061M	2681-37
			3157-37
2062	Sprague	ULN-2062M	2681-38
			3157-38
2064	SiliconG	SG2064	2682-83
			3157-105
	Sprague	ULN-2064B	2682-97
			3157-120
		ULS-2064H	2682-109
	TI	ULN2064	2682-124
			3157-134
2065	SiliconG	SG2065	2682-84
			3157-106
	Sprague	ULN-2065B	2682-98
			3157-121
		ULS-2065H	2682-110
	TI	ULN2065	2682-125
			3157-135
2066	SiliconG	SG2066	2682-85
			3157-107
	Sprague	ULN-2066B	2682-99
			3157-122
		ULS-2066H	2682-111
	TI	ULN2066	2682-126
2067	SiliconG	SG2067	2682-86
			3157-108
	Sprague	ULN-2067B	2682-100
			3157-123
		ULS-2067H	2682-112
	TI	ULN2067	2682-127

Base Number	Source	Device	Page-Line
2068	Motorola	ULN2068	3157-102
	Motorola	**ULN2068B**	★3064
	SiliconG	SG2068	2682-87
			3157-109
	Sprague	ULN-2068B	2682-101
			3157-124
		ULS-2068H	2682-113
	TI	ULN2068	2682-128
2069	SiliconG	SG2069	2682-88
			3157-110
	Sprague	ULN-2069B	2682-102
			3157-125
		ULS-2069H	2682-114
	TI	ULN2069	2682-129
207	AnalogSys	MA207	3193-9
	MicroPwr	**MPOP-207A**	★3529
			3203-29
		MPOP-207B	★3529
			3203-55
		MPOP-207E	★3529
			3203-30
		MPOP-207F	★3529
			3203-56
	Motorola	LM207	3191-19
	National	LM207	3191-21
	PMI	**OP-207A**	★3566
			3183-1
		OP-207B	★3566
			3183-2
		OP-207E	★3566
			3184-16
		OP-207F	★3566
			3184-17
	SiliconG	SG207	3191-24
	TI	LM207	3191-26
2070	SiliconG	SG2070	2682-89
			3157-111
	Sprague	ULN-2070B	2682-103
			3157-126
		ULS-2070H	2682-115
2071	SiliconG	SG2071	2682-90
	Sprague	**ULN-2071B**	2682-104
			3157-127
		ULS-2071H	2682-116
2072	SiliconG	SG2072	2682-91
			3157-112
2073	SiliconG	SG2073	2682-92
			3157-113
2074	Motorola	ULN2074	3157-103
	Motorola	**ULN2074B**	★3064
	SiliconG	SG2074	2682-93
			3157-114
	Sprague	ULN-2074B	2682-105
			3157-128
		ULS-2074H	2682-117
	TI	ULN2074	2682-130
2075	SiliconG	SG2075	2682-94
			3157-115
	Sprague	ULN-2075B	2682-106
			3157-129
		ULS-2075H	2682-118
	TI	ULN2075	2682-131
2076	SiliconG	SG2076	2682-95
			3157-116
	Sprague	ULN-2076B	2682-107
			3157-130
		ULS-2076H	2682-119
2077	SiliconG	SG2077	2682-96
			3157-117
	Sprague	ULN-2077B	2682-108
			3157-131
		ULS-2077H	2682-120
208	AMD	LM208	3190-32
		LM208A	3186-18
	AD	**AD208**	★3351
			3190-34
		AD208A	★3351
			3186-20
	AnalogSys	MA208	3209-52
	Fairchild	uA208AM	3186-22
		uA208M	3190-36
	MicroPwr	**MPLM208**	★3529
	Motorola	LM208	3190-41
		LM208A	3186-27
	National	LM208	3190-43
		LM208A	3186-29
			(Continued)

¶ Indicates page number in Application Note Directory.
★ Indicates addition data is provided on the page noted.

Base Number	Source	Device	Page-Line
208	**PMI**	**DAC-208A**	★3567
			2643-31
		DAC-208B	★3567
			2643-33
		DAC-208E	★3567
			2643-32
		DAC-208F	★3567
			2643-34
	PMI	PM-208	3190-45
		PM-208A	3186-31
	SGS	M208	3167-98
	SiliconG	SG208	3190-47
		SG208A	3186-33
2081	Sprague	ULN-2081A	3158-99
2082	Sprague	ULN-2082A	3158-94
2083	Sprague	ULN-2083A	3157-173
		ULS-2083H	3157-174
2085	Plessey	TDA2085A	3173-56
20850	**RCA**	**PA20850**	★4824
			4467-27
2086	Sprague	ULN-2086A	3157-32
2089	NEC	uPB2089	3771-23
209	Cherry	CS209	3236-36
	Fairchild	uA209M	3221-58
	Motorola	**LM209H**	★3531
			3221-22
		LM209K	★3531
			3221-61
	National	LM209H	3221-25
		LM209K	3221-64
	SiliconG	SG209K	3221-70
		SG209T	3221-30
2090	MicroSci	TDA2090	3239-89
2091	MicroSci	TDA2091	3239-90
209X4	National	DMPAL209X4C	
			4481-119
20C1	**MMI**	**HAL20C1C**	★4776
			★4783
			4483-106
		HAL20C1M	★4776
			★4783
			4484-27
		PAL20C1C	★4768
			4481-56
		PAL20C1M	★4768
			4481-57
	National	DMPAL20C1C	4481-68
		DMPAL20C1M	4481-69
	Si-Fab	**HCT20C1**	★4827
			4483-82
20L10	**MMI**	**HAL20L10C**	★4776
			★4785
			4484-14
		HAL20L10M	★4776
			★4785
			4484-28
		PAL20L10C	★4768
			4482-2
		PAL20L10M	★4768
			4481-115
	National	DMPAL20L10C	
			4481-120
		DMPAL20L10M	
			4482-6
	Si-Fab	**HCT20L10**	★4827
			4483-83
20L2	**MMI**	**HAL20L2C**	★4776
			★4783
			4483-107
		HAL20L2M	★4776
			★4783
			4484-8
		PAL20L2C	★4768
			4481-58
		PAL20L2M	★4768
			4481-59
	National	DMPAL20L2C	4481-70
		DMPAL20L2M	4481-71
	Si-Fab	**HCT20L2**	★4827
			4483-84
20L76	**Raytheon**	**CGA20L76**	★ 508
			★4822
			4462-28
			4463-1
20L8	**MMI**	**HAL20L8AC**	★4776
			★4787
			(Continued)

Base Number	Source	Device	Page-Line
20L8	**MMI**	**HAL20L8AC**	4483-27
		HAL20L8AM	★4776
			4483-31
		PAL20L8AC	★4768
			4480-37
		PAL20L8AM	★4768
			4480-70
20R4	**MMI**	**HAL20R4AC**	★4776
			★4787
			4483-28
		HAL20R4AM	★4776
			4483-32
		PAL20R4AC	★4768
			4480-38
		PAL20R4AM	★4768
			4480-71
20R6	**MMI**	**HAL20R6AC**	★4776
			★4787
			4483-29
		HAL20R6AM	★4776
			4483-33
		PAL20R6AC	★4768
			4480-39
		PAL20R6AM	★4768
			4480-72
20R8	**MMI**	**HAL20R8AC**	★4776
			★4787
			4483-30
		HAL20R8AM	★4776
			4483-34
		PAL20R8AC	★4768
			4480-40
		PAL20R8AM	★4768
			4480-73
20X10	**MMI**	**HAL20X10C**	★4776
			★4785
			4484-15
		HAL20X10M	★4776
			★4785
			4484-29
		PAL20X10C	★4768
			4482-3
		PAL20X10M	★4768
			4481-116
	National	DMPAL20X10C	
			4481-121
		DMPAL20X10M	
			4482-7
20X4	**MMI**	**HAL20X4C**	★4776
			★4785
			4484-16
		HAL20X4M	★4776
			★4785
			4484-30
		PAL20X4C	★4768
			4482-4
		PAL20X4M	★4768
			4481-117
	National	DMPAL20X4M	4482-8
20X8	**MMI**	**HAL20X8C**	★4776
			★4785
			4484-17
		HAL20X8M	★4776
			★4785
			4484-31
		PAL20X8C	★4768
			4482-5
		PAL20X8M	★4768
			4481-118
	National	DMPAL20X8C	4481-122
		DMPAL20X8M	4482-9
20x10	**Si-Fab**	**HCT20x10**	★4827
			4483-85
20x4	**Si-Fab**	**FCT20x4**	★4827
			4483-63
20x8	**Si-Fab**	**HCT20x8**	★4827
			4483-86
21	**Burr-Brown**	**MP21**	★2849
			2628-36
			¶ 261-3
			¶ 272-5
	Burr-Brown	MP21	1341-122
			1344-81
			1346-103
			1347-97
			1354-101
			(Continued)

Base Number	Source	Device	Page-Line
21	Burr-Brown	MP21	¶ 261-3
			¶ 272-5
		OP21A	3180-103
		OP21B	3180-105
		OP21E	3180-104
		OP21F	3180-106
		OP21G	3180-107
	Burr-Brown	**OPA21A**	★2850
			3183-6
		OPA21B	★2850
			3184-24
		OPA21E	★2850
			3183-7
		OPA21F	★2850
			3184-25
		OPA21G	★2850
			3187-5
		UAF21	★2852
			3232-12
		UAF21H	★2852
			3232-13
	PMI	**OP-21A**	★3566
			3184-13
		OP-21B	★3566
			3183-38
		OP-21E	★3566
			3184-14
		OP-21F	★3566
			3183-39
		OP-21G	★3566
			3184-28
	Rockwell	A21XX	1339-107
	Zilog	Model 21	1819-2
210	AnalogSys	MD-210	2683-81
	Barvon	BC210	4460-45
	Comlinear	CLC210A	3176-53
			3176-119
			3180-134
		CLC210AI	3197-25
		CLC210AM	3176-54
			3176-120
			3180-135
			3197-26
	Dionics	DI210	2663-118
	Exar	**XR210**	★3365
			3214-14
			¶ 310-12
		XR210M	★3365
			3214-15
			¶ 310-12
	Motorola	**MVME210**	★2041
	National	**COP210C**	★1526
			1338-56
	National	LM210	3174-18
	PMI	**DAC-210A**	★3567
			2647-22
		DAC-210B	★3567
			2647-23
		DAC-210E	★3567
			2647-24
		DAC-210F	★3567
			2647-29
		DAC-210G	★3567
			2647-26
	Signetics	TCA210	3164-1
	SiliconG	SG210	3174-16
2100	**Plessey**	**CLA2100**	★4819
			4466-1
	Sanyo	LA2100	3168-114
	Signetics	PCE2100	2664-23
	SSM	SSM2100	3155-127
	TI	SE2100P	1338-3
			1263-17
	TI	**TMS2100**	★1709
			1339-36
	TI	TMS2100	1265-11
	Thomson-CSF		
		SFC2100	3228-39
	TRW-LSI	CA2100	3170-88
21000	**RCA**	**PA21000**	★4824
			4467-28
2101	Intersil	LH2101A	3205-32
	National	LH2101A	3205-33
	Raytheon	LH2101A	3205-35
	Sanyo	LA2101	3168-115
	Signetics	**LH2101A**	★ 526
			(Continued)

Base Number	Source	Device	Page-Line
2101	**Signetics**	**LH2101A**	3205-36
	Synertek	**SY2101-1**	★4210
			3773-104
		SY2101A	★4210
			3773-63
		SY2101A-2	★4210
			3773-30
		SY2101A-4	★4210
			3773-89
	TI	TCM2101	3218-41
	Thomson-CSF		
		SFC2101A	3191-15
2102	Fairchild	2102F	3775-30
		2102FM	3775-31
		2102H	3775-14
		2102HM	3775-15
		2102LF	3775-32
		2102LFM	3775-33
		2102LH	3775-16
		2102LHM	3775-17
	NEC	uPD2102AL-2	3775-19
		uPD2102AL-4	3775-45
	SGS	M2102A	3775-35
		M2102A-2	3775-20
		M2102A-4	3775-46
		M2102A-6	3775-56
		M2102AL	3775-36
		M2102AL-2	3775-21
		M2102AL-4	3775-47
	TI	TCM2102	3218-42
21021	Fairchild	21021	3775-40
		21021M	3775-41
21022	Fairchild	21022	3775-51
		21022M	3775-52
2102L1	Fairchild	2102L1	3775-42
		2102L1M	3775-43
2102L2	Fairchild	2102L2	3775-53
		2102L2M	3775-54
2103	**Exar**	**XR2103**	★3368
			3218-4
2104	Thomson-CSF		
		SGC2104	3229-117
2105	Thomson-CSF		
		SFC2105	3229-44
2106	HP	2106BK	1965-15
	Hitachi	HM2106	598-20
2107	TeledyneC	2107BE	2615-21
	Thomson-CSF		
		SFC2107	3191-27
2108	Intersil	LH2108A	3204-14
	MicroPwr	**MPOP2108**	★3529
	National	LH2108	3205-18
		LH2108A	3204-15
	PMI	**PM-2108**	★3566
			3205-20
		PM-2108A	★3566
			3204-17
	Thomson-CSF		
		SFC2108	3190-48
		SFC2108A	3186-34
		SFC2108M	3190-49
2109	Thomson-CSF		
		SFC2109	3221-32
		SFC2109M	3221-76
211	AMD	LF211	3159-61
		LH211	3161-2
		LM211	3159-53
	AD	AD211	3159-38
	AnalogSys	MS211	3238-84
	Motorola	LM211	3159-42
	National	**COP211C**	★1526
			1338-57
	National	LF211	3159-59
		LM211	3159-44
	Siemens	FZH211	601-94
		FZH211S	602-22
	Signetics	LM211	3159-47
	SiliconG	SG211	3159-49
	Siliconix	**DG211C**	★3077
			2617-14
	TI	LM211	3160-38
2110	Hitachi	HM2110	598-40
			3774-45
		HM2110-1	3774-32
		HM2110-2	3774-26
	Intersil	LH2110	3174-22
			(Continued)

Arranged alphanumerically from left to right.

Base Number	Source	Device	Page-Line
2110	National	LH2110	3174-23
	Sanyo	LA2110	3168-116
	Siemens	SDA2110	3170-45
	Signetics	PCE2110	2664-24
	TeledyneC	2110BE	2615-19
	Thomson-CSF		
		SFC2110M	3193-34
2111	AMD	LH2111	3161-3
	Intersil	LH2111	3161-5
	National	LF2111	3159-10
		LH2111	3161-6
	NEC	uPD2111AL-2	3773-28
	Raytheon	LH2111	3161-8
	RCA	CA2111A	3168-69
	Signetics	PCF2111	2664-25
	Sprague	ULN-2111A	3168-93
			3172-16
	Synertek	**SY2111-1**	★**4210**
			3773-103
		SY2111A	★**4210**
			3773-62
		SY2111A-2	★**4210**
			3773-29
		SY2111A-4	★**4210**
			3773-88
	Thomson-CSF		
		SFC2111	3159-50
2112	Hitachi	HM2112	598-41
			3774-15
		HM2112-1	3774-8
	Siemens	SDA2112-2	3214-29
	Signetics	PCE2112	2664-14
	Synertek	**SY2112-1**	★**4210**
			3773-94
		SY2112A	★**4210**
			3773-61
		SY2112A-2	★**4210**
			3773-27
		SY2112A-4	★**4210**
			3773-87
2114	Fairchild	2114	3777-24
		2114-2	3776-56
		2114-3	3776-120
		2114-3M	3776-121
		2114L	3777-25
		2114L-2	3776-57
		2114L-3	3776-122
		2114M	3777-26
	Intel	2114AL-1	3776-21
		2114AL-2	3776-27
		2114AL-3	3776-32
		2114AL-4	3776-59
		M2114A-4	3776-60
		M2114A-5	3776-91
		M2114AL-3	3776-33
		M2114AL-4	3776-61
	MicroPwr	MP2114C	3776-84
	Motorola	**MCM2114-20**	★**4046**
			3776-63
		MCM2114-25	★**4046**
			3776-92
		MCM2114-30	★**4046**
			3776-125
		MCM2114-45	★**4046**
			3777-29
	National	AH2114	2618-81
		AH2114C	2618-84
		MM2114	3777-31
		MM2114-15	3776-34
		MM2114-2	3776-65
		MM2114-2L	3776-66
		MM2114-3	3776-127
		MM2114-3L	3776-128
		MM2114L	3777-32
		NMC2114A-3	3776-35
		NMC2114A-3L	3776-36
		NMC2114A-4	3776-67
		NMC2114A-4L	3776-68
	NEC	EA2114L	3777-33
		uPD2114L	3777-34
	OKI	**MSM2114**	★**4118**
	SMOS	SRM2114	3776-89
	Synertek	**SY2114**	★**4210**
			3777-35
		SY2114-2	★**4210**
			3776-69
			(Continued)

Base Number	Source	Device	Page-Line
2114	**Synertek**	**SY2114-3**	★**4210**
			3776-129
		SY2114A-4	★**4210**
			3776-70
		SY2114A-5	★**4210**
			3776-95
		SY2114AL-1	★**4210**
			3776-22
		SY2114AL-2	★**4210**
			3776-28
		SY2114AL-3	★**4210**
			3776-37
		SY2114AL-4	★**4210**
			3776-71
		SY2114L	★**4210**
			3777-36
		SY2114L-2	★**4210**
			3776-72
		SY2114L-3	★**4210**
			3776-130
		SY2114LV-2	★**4210**
			3776-73
		SYM2114	★ **535**
			3777-37
		SYM2114-3	★ **535**
			3776-131
		SYM2114A-3	★ **535**
			3776-38
		SYM2114A-4	★ **535**
			3776-74
		SYM2114A-5	★ **535**
			3776-96
	TI	TMS2114-15	3776-39
		TMS2114-20	3776-75
		TMS2114-25	3776-97
		TMS2114-45	3777-38
		TMS2114L-15	3776-40
		TMS2114L-20	3776-76
		TMS2114L-25	3776-98
		TMS2114L-45	3777-39
2114CLP1			
	MicroPwr	MP2114CLP1	3777-53
2114CLP3			
	MicroPwr	MP2114CLP3	3777-55
2115	Intel	2115A	3774-54
		2115A-2	3774-87
		2115AL	3774-55
		2115AL-2	3774-88
		2115H-2	3774-34
		2115H-3	3774-37
		2115H-4	3774-47
	Motorola	MCM2115A-45	
			3774-56
		MCM2115A-55	
			3774-74
		MCM2115A-70	
			3774-89
2116	National	NMC2116-15	3778-76
		NMC2116-15L	3778-77
		NMC2116-20L	3778-126
		NMC2116-25	3779-23
		NMC2116-25L	3778-127
2118	Intel	2118-4	3768-70
			¶ 321-9
		M2118-4	3768-71
		M2118-7	3768-81
	NEC	uPD-2118-2	3768-77
		uPD2118	3768-93
		uPD2118-3	3768-65
	Thomson-CSF		
		SFC2118	3193-52
212	AnalogSys	MC212	3173-42
			3234-153
	Motorola	LM212	3190-28
	National	LM212	3190-30
	Siliconix	**DG212C**	★**3077**
			2617-15
2120	**Exar**	**XR2120**	★**3368**
			3218-6
	Hitachi	HM2120	598-33
2121	**Exar**	**XR2121**	★**3369**
			3218-1
2122	**Exar**	**XR2122**	★**3370**
			3217-159

Base Number	Source	Device	Page-Line
2123	**Exar**	**XR2123**	★**3370**
			3217-158
	Western	WD2123	2686-62
2125	**Exar**	**XR2125**	★**3371**
			3218-2
	Intel	2125A	3774-58
		2125A-2	3774-91
		2125AL	3774-59
		2125AL-2	3774-92
		2125H-1	3774-30
		2125H-2	3774-35
		2125H-3	3774-38
		2125H-4	3774-48
	Motorola	MCM2125A-45	
			3774-60
		MCM2125A-55	
			3774-75
		MCM2125A-70	
			3774-93
2126	TeledyneC	2126BG	2618-53
2128	**OKI**	**MSM2128**	★**4118**
	Synertek	**SY2128-1**	★**4210**
			3778-15
		SY2128-2	★**4210**
			3778-45
		SY2128-3	★**4210**
			3778-79
		SY2128-4	★**4210**
			3778-129
		SY2128L-1	★**4210**
			3778-16
		SY2128L-2	★**4210**
			3778-46
		SY2128L-3	★**4210**
			3778-80
		SY2128L-4	★**4210**
			3778-130
		SYM2128-3	★ **535**
			3778-83
		SYM2128-4	★ **535**
			3778-133
2129	**Synertek**	**SY2129-1**	★**4210**
			3778-17
		SY2129-2	★**4210**
			3778-47
		SY2129-3	★**4210**
			3778-81
		SY2129-4	★**4210**
			3778-131
		SY2129L-1	★**4210**
			3778-18
		SY2129L-2	★**4210**
			3778-48
		SY2129L-3	★**4210**
			3778-82
		SY2129L-4	★**4210**
			3778-132
		SYM2129-3	★ **535**
			3778-84
		SYM2129-4	★ **535**
			3778-134
213	AnalogSys	MC213	3173-43
			3234-149
2130	**Synertek**	**SY2130**	★**4210**
			3777-69
	TI	SE2130P	1338-4
			1263-18
2131	**Synertek**	**SY2131**	★**4210**
			3777-70
2132	TI	TMS2132	1338-2
			1265-12
2136	Sprague	ULN-2136A	3168-94
214	AnalogSys	MS214	3238-85
	National	NMC214A-5	3776-94
	Panasonic	AN214	3164-92
2140	Hitachi	HM2140	598-58
	SGS	TDA2140	3170-173
	Sprague	ULN-2140A	2619-79
		ULS-2140H	2619-80
	Telefunken	TDA2140	3171-8
2141	Intel	2141-2	3780-15
		2141-3	3780-20
		2141-4	3780-32
		2141-5	3780-56
		2141L-3	3780-21
		2141L-4	3780-33
			(Continued)

Base Number	Source	Device	Page-Line
2141	Intel	2141L-5	3780-57
	National	NMC2141-2	3780-16
		NMC2141-3	3780-22
2142	Hitachi	HM2142	598-59
			3779-31
	Synertek	SY2142	3777-42
		SY2142-2	3776-79
		SY2142-3	3776-132
		SY2142L	3777-43
		SY2142L-2	3776-80
		SY2142L-3	3776-133
2143	Western	WD2143-03	1354-89
2147	AMD	AM2147-35	3779-62
		AM2147-45	3779-68
		AM2147-45M	3779-69
		AM2147-55	3779-82
		AM2147-55M	3779-83
		AM2147-70	3779-112
		AM2147-70M	3779-113
	Intel	2147-3	3779-86
		2147A	3779-116
		2147A-3	3779-87
		2147AL	3779-117
		2147AL-3	3779-88
		2147H	3779-118
		2147H-1	3779-63
		2147H-2	3779-72
		2147H-3	3779-89
		2147HL	3779-119
		2147HL-3	3779-90
		M2147H	3779-120
		M2147H-2	3779-73
		M2147H-3	3779-91
	Intersil	2147	3779-121
	ITT	ITT2147-55	3779-92
		ITT2147-70	3779-122
		ITT2147-90	3780-8
	Motorola	MCM2147-100	3780-9
		MCM2147-55	3779-93
		MCM2147-70	3779-123
		MCM2147-85	3780-5
	National	MM2147	3779-124
		MM2147-3	3779-94
		MM2147L	3779-125
		MM2147M	3780-6
		NMC2147H-3	3779-97
		NMC2147H-4	3779-98
	NEC	uPD2147	3780-10
		uPD2147-2	3779-128
		uPD2147-3	3779-99
	NEC	**μPD2147A**	★**4080**
	NEC	uPD2147A-25	3779-53
		uPD2147A-35	3779-64
		uPD2147A-45	3779-75
	Synertek	**SY2147-3**	★**4210**
			3779-100
		SY2147-6	★**4210**
			3780-7
		SY2147H	★**4210**
			3779-129
		SY2147H-1	★**4210**
			3779-65
		SY2147H-2	★**4210**
			3779-76
		SY2147H-3	★**4210**
			3779-101
		SY2147HL	★**4210**
			3780-1
		SY2147HL-3	★**4210**
			3779-102
		SYM2147	★ **535**
			3780-2
		SYM2147-3	★ **535**
			3779-103
		SYM2147-6	★ **535**
			3779-104
		SYM2147H-2	★ **535**
			3779-77
		SYM2147H-3	★ **535**
			3779-105
	Universal	UM2147-1	3779-107
2148	AMD	AM2148-35	3775-81
		AM2148-45	3775-88
		AM2148-45M	3775-89
		AM2148-55	3775-106
		AM2148-55M	3775-107
			(Continued)

¶ Indicates page number in Application Note Directory.
★ Indicates addition data is provided on the page noted.

Base Number	Source	Device	Page-Line
2148	AMD	AM2148-70	3775-125
		AM2148-70M	3775-126
	Hitachi	HM2148	3774-95
		HM2148-3	3775-104
	Intel	2148H	3776-2
		2148H-2	3775-94
		2148H-3	3775-112
		2148HL	3776-3
		2148HL-3	3775-113
		M2148H	3776-6
	National	MM2148H	3779-126
		MM2148H-2	3779-74
		MM2148H-3	3779-95
		MM2148H-3L	3779-96
		MM2148H-L	3779-127
		NMC2148	3776-7
		NMC2148-3	3775-115
		NMC2148H	3776-8
		NMC2148L	3776-9
	Synertek	**SY2148H**	★**4210**
			3776-10
		SY2148H-2	★**4210**
			3775-97
		SY2148H-3	★**4210**
			3775-117
		SY2148HL	★**4210**
			3776-11
		SY2148HL-3	★**4210**
			3775-118
		SYM2148H	★ **535**
			3776-14
		SYM2148H-3	★ **535**
			3775-121
		SYM2148H-6	★ **535**
			3776-17
2149	AMD	AM2149-35	3775-82
		AM2149-45	3775-90
		AM2149-45M	3775-91
		AM2149-55	3775-106
		AM2149-55M	3775-109
		AM2149-70	3775-127
		AM2149-70M	3775-128
	Intel	2149H	3776-4
		2149H-2	3775-95
		2149H-3	3775-114
		2149HL	3776-5
	NEC	**μPD2149**	★**4083**
			3775-116
		μPD2149-1	★**4083**
			3775-96
		μPD2149-2	★**4083**
			3775-83
	Synertek	**SY2149H**	★**4210**
			3776-12
		SY2149H-2	★**4210**
			3775-98
		SY2149H-3	★**4210**
			3775-119
		SY2149HL	★**4210**
			3776-13
		SY2149HL-3	★**4210**
			3775-120
		SYM2149H	★ **535**
			3776-15
		SYM2149H-3	★ **535**
			3775-122
		SYM2149H-6	★ **535**
			3776-18
215	Analogic	MP215	3155-35
	Exar	**XR215**	★**3365**
			3214-25
			¶ 301-6
			¶ 310-9
			¶ 310-12
		XR215M	★**3365**
			3214-26
			¶ 301-6
			¶ 310-9
			¶ 310-12
	ITT	SAK215	3173-85
	PMI	**OP-215B**	★**3566**
			3180-1
			3205-37
		OP-215C	★**3566**
			3180-2
			3206-21
			(Continued)

Base Number	Source	Device	Page-Line
215	**PMI**	**OP-215E**	★**3566**
			3188-31
		OP-215F	★**3566**
			3180-3
			3205-38
		OP-215G	★**3566**
			3180-4
			3206-22
	Siemens	FZH215B	601-95
2150	Telefunken	TDA2150	3171-9
	TI	**TMS2150-4**	★**4222**
			3232-96
		TMS2150-5	★**4222**
			3232-97
	TI	TMS2150-5	3774-5
	TI	**TMS2150-7**	★**4222**
			3232-98
	TI	TMS2150-7	3774-6
	TI	**TMS2150-9**	★**4222**
			3232-99
	TI	TMS2150-9	3774-7
2151	SGS	TDA2151	3170-174
	Telefunken	TDA2151	3171-10
2158	**Synertek**	**SY2158A-1**	★**4210**
			3777-61
		SY2158A-2	★**4210**
			3777-73
		SY2158A-3	★**4210**
			3777-81
		SY2158A-4	★**4210**
			3777-90
		SY2158B-1	★**4210**
			3777-62
		SY2158B-2	★**4210**
			3777-74
		SY2158B-3	★**4210**
			3777-82
		SY2158B-4	★**4210**
			3777-83
		SY2158L-1	★**4210**
			3777-63
		SY2158L-2	★**4210**
			3777-75
		SY2158L-3	★**4210**
			3777-84
		SY2158L-4	★**4210**
			3777-91
2159	**Synertek**	**SY2159A-1**	★**4210**
			3777-64
		SY2159A-2	★**4210**
			3777-76
		SY2159A-3	★**4210**
			3777-85
		SY2159A-4	★**4210**
			3777-92
		SY2159B-1	★**4210**
			3777-65
		SY2159B-2	★**4210**
			3777-77
		SY2159B-3	★**4210**
			3777-86
		SY2159B-4	★**4210**
			3777-93
		SY2159L-1	★**4210**
			3777-66
		SY2159L-2	★**4210**
			3777-78
		SY2159L-3	★**4210**
			3777-87
		SY2159L-4	★**4210**
			3777-94
216	Ferranti	ZNA216E	2637-43
		ZNA216J	2637-44
2160	Telefunken	TDA2160	3171-11
2161	SGS	TDA2161	3170-175
	Telefunken	TDA2161	3171-12
2164	Intel	2164A-15	3769-70
		2164A-20	3769-95
		M2164A-20	3769-96
2165	MCE	MCEL2165	3175-61
2167	**AMD**	**AM2167-35**	★**3915**
			3782-13
		AM2167-45	★**3915**
			3782-19
		AM2167-45M	★**3915**
			3782-20
			(Continued)

Base Number	Source	Device	Page-Line
2167	**AMD**	**AM2167-55**	★**3915**
			3782-30
		AM2167-55M	★**3915**
			3782-31
		AM2167-70	★**3915**
			3782-44
		AM2167-70M	★**3915**
			3782-45
	ITT	ITT2167-45	3782-23
		ITT2167-55	3782-35
		ITT2167-70	3782-51
	Motorola	**MCM2167H-35**	★**4046**
			★**4053**
			3782-15
		MCM2167H-45	★**4046**
			★**4053**
			3782-24
	NEC	**μPD2167**	★**4086**
			3782-36
		μPD2167-2	★**4086**
			3782-52
		μPD2167-3	★**4086**
			3782-37
	Synertek	**SY2167**	★**4210**
			3782-53
		SY2167-3	★**4210**
			3782-38
		SYM2167	★ **535**
			3782-54
2168	**AMD**	**AM2168-45**	★**3920**
			3781-17
		AM2168-55	★**3920**
			3781-36
		AM2168-55M	★**3920**
			3781-37
		AM2168-70	★**3920**
			3781-58
		AM2168-70M	★**3920**
			3781-59
	Synertek	**SY2168**	★**4210**
			3781-67
		SY2168-3	★**4210**
			3781-42
		SYM2168	★ **535**
			3781-69
2169	**AMD**	**AM2169-45**	★**3920**
			3781-18
		AM2169-55	★**3920**
			3781-38
		AM2169-55M	★**3920**
			3781-39
		AM2169-70	★**3920**
			3781-60
		AM2169-70M	★**3920**
			3781-61
	Synertek	**SY2169**	★**4210**
			3781-68
		SY2169-3	★**4210**
			3781-43
		SYM2169	★ **535**
			3781-70
217	Fairchild	uA217	3228-106
	MCE	MCELM217	3228-114
	Motorola	**LM217**	★**3532**
			3228-117
		LM217L	★**3532**
			3228-98
		LM217M	★**3532**
			3229-27
	National	LM217	3228-120
	Panasonic	AN217P	3168-2
	SiliconG	SG217	3228-102
			3228-123
	Telefunken	U217	3239-109
	TI	LM217	3228-125
	Unitrode	**UC217**	★**3711**
			3229-4
2170	Telefunken	U2170B	3172-97
	TI	**TMS2170**	★**1709**
			1339-37
	TI	TMS2170	1265-13
218	AMD	LM218	3193-45
	National	LM218	3193-49
	TI	LM218	3193-51
2186	Intel	2186-25	3768-52
			3781-123
			(Continued)

Base Number	Source	Device	Page-Line
2186	Intel	2186-25	¶ 321-10
		2186-30	3768-53
			3781-125
			¶ 321-10
		2186-35	3768-56
			3781-127
			¶ 321-10
2187	Intel	2187-35	3781-128
			¶ 321-10
		2187A-25	3768-57
			3781-129
			¶ 321-10
		2187A-30	3768-54
			3781-126
			¶ 321-10
		2187A-35	3768-55
			¶ 321-10
219	AMD	LM219	3161-20
	National	LM219	3161-22
	Signetics	LM219	3161-24
2190	SGS	TDA2190	3172-4
21C14	SSS	SCM21C14-1	3776-20
		SCM21C14-2	3776-26
		SCM21C14-3	3776-30
		SCM21C14-4	3776-49
21D1	Synertek	SY21D1	3777-67
		SYM21D1	3777-68
21H01	Synertek	SY21H01	3772-125
		SY21H01-2	3773-3
21H11	Synertek	SY21H11	3772-124
		SY21H11-2	3773-2
21H12	Synertek	SY21H12	3772-123
		SY21H12-2	3773-1
21L02	Fairchild	21L02F	3775-34
		21L02H	3775-18
21L021	Fairchild	21L021	3775-44
21L022	Fairchild	21L022	3775-55
21L14	**Motorola**	**MCM21L14-20**	★**4046**
			3776-64
		MCM21L14-25	★**4046**
			3776-93
		MCM21L14-30	★**4046**
			3776-126
		MCM21L14-45	★**4046**
			3777-30
21L15	Motorola	MCM21L15A-45	
			3774-57
		MCM21L15A-70	
			3774-90
21L25	Motorola	MCM21L25A-45	
			3774-61
		MCM21L25A-70	
			3774-94
21L41	AMD	AM21L41-12	3780-14
		AM21L41-15	3780-19
		AM21L41-20	3780-29
		AM21L41-25	3780-49
21L47	AMD	AM21L47-45	3779-70
		AM21L47-55	3779-84
		AM21L47-70	3779-114
21L48	AMD	AM21L48-45	3775-92
		AM21L48-55	3775-110
		AM21L48-70	3775-129
21L49	AMD	AM21L49-45	3775-93
		AM21L49-55	3775-111
		AM21L49-70	3776-1
21SC14	Mitel	MD21SC14-10	3776-19
		MD21SC14-15	3776-29
		MD21SC14-25	3776-86
22	**Burr-Brown**	**MP22**	★**2849**
			1344-82
			1345-40
			1348-61
			1354-102
	Datal/O	22A Personal Programmer	4351-14
		22B Personal Programmer	4351-15
	PMI	**OP-22A**	★**3566**
			3185-10
		OP-22B	★**3566**
			3187-18
		OP-22H	★**3566**
			3188-53

Arranged alphanumerically from left to right.

Base Number	Source	Device	Page-Line
220	Comlinear	CLC220A	3156-83
			3176-47
			3180-157
		CLC220AI	3197-27
		CLC220AM	3156-84
			3176-48
			3180-158
			3197-28
	MCE	MGA220	4470-12
	PMI	**OP-220**	★**3566**
			3180-40
		OP-220A	★**3566**
			3203-45
		OP-220B	★**3566**
			3203-57
		OP-220C	★**3566**
			3204-30
		OP-220E	★**3566**
			3203-46
		OP-220F	★**3566**
			3203-58
		OP-220G	★**3566**
			3204-31
		OP-220H	★**3566**
			3204-54
	Signetics	TCA220	3210-8
	SiliconG	SG220-05K	3226-40
		SG220-05P	3226-28
		SG220-05R	3226-41
		SG220-05T	3226-22
		SG220-12K	3227-9
		SG220-12P	3226-133
		SG220-12R	3227-10
		SG220-12T	3226-120
		SG220-15K	3227-60
		SG220-15P	3227-61
		SG220-15R	3227-50
		SG220-15T	3227-35
		SG220-5	3226-66
			3226-61
			3226-67
			3226-58
2200	Exar	XR2200	2679-68
		XR2200M	2679-69
	MicroNet	**MN2200**	★**3042**
			3155-74
			¶ 308-10
		MN2200H	★**3042**
			3155-75
			¶ 308-10
	NEC	uPB2200	3772-33
	Sanyo	LA2200	3238-155
	Signetics	**ACE2200**	★**4860**
			4460-10
	TI	SE2200P	1339-25
			1339-32
			1263-19
	Thomson-CSF		
		SFC2200	3228-40
2201	Exar	XR2201	2679-120
			3158-17
		XR2201M	2679-121
			3158-18
	MicroNet	MN2201	3155-76
		MN2201H	3155-77
	National	LH2201A	3205-34
	TI	TCM2201	3217-117
	Thomson-CSF		
		SFC2201A	3191-43
	Xicor	**X2201A**	★**4266**
			3758-51
		X2201ADM	★**4266**
			3758-52
22012	RCA	CD22012	3166-149
22014	RCA	CD22014	3166-150
2202	Exar	XR2202	2679-139
			3158-19
		XR2202M	2679-140
			3158-20
	NEC	uPB2202	3772-44
	TI	TCM2202	3217-111
			3217-112
2203	Exar	XR2203	2679-92
			3158-21
		XR2203M	3158-22
			(Continued)

Base Number	Source	Device	Page-Line
2203	TI	TCM2203	3217-113
			3217-115
2204	Exar	XR2204	2679-73
			3158-23
		XR2204M	2679-74
			3158-24
	Sprague	ULN-2204A	3168-10
			¶ 301-17
	TI	TCM2204	3217-114
			3217-116
	Thomson-CSF		
		SFC2204	3229-116
2205	NEC	uPB2205	3774-70
	Thomson-CSF		
		SFC2205	3229-45
2206	**Exar**	**XR2206**	★**3373**
			3215-21
			3215-22
			3218-24
			3218-25
			¶ 285-11
			¶ 287-2
			¶ 287-9
			¶ 307-15
		XR2206C	★**3373**
			3215-23
			¶ 285-11
			¶ 287-2
			¶ 287-9
			¶ 307-15
		XR2206M	★**3373**
			3215-24
			3218-26
			¶ 285-11
			¶ 287-2
			¶ 287-9
			¶ 307-15
	NEC	uPB2206	3772-30
2207	Exar	XR2207	3215-8
			3218-27
			¶ 287-2
			¶ 302-2
			¶ 310-7
		XR2207C	3215-9
			¶ 287-2
			¶ 302-2
			¶ 310-7
		XR2207M	3218-28
			¶ 287-2
			¶ 302-2
			¶ 310-7
	Raytheon	XR2207C	3215-14
		XR2207M	3215-15
	Thomson-CSF		
		SFC2207	3191-28
2208	Exar	XR2208	3235-30
			¶ 308-1
			¶ 310-6
			¶ 310-7
		XR2208M	3235-31
			¶ 308-1
			¶ 310-6
			¶ 310-7
	MicroPwr	**MPOP2208**	★**3529**
	National	LH2208	3205-19
		LH2208A	3204-16
	PMI	PM-2208	3205-21
		PM-2208A	3204-18
	Thomson-CSF		
		SFC2208	3190-50
		SFC2208A	3186-35
2209	**Exar**	**XR2209C**	★**3374**
			3215-10
		XR2209M	★**3374**
			3215-11
	Thomson-CSF		
		SFC2209	3221-33
221	Analogic	MP221	3155-134
	National	LM221	3156-29
		LM221A	3156-30
	PMI	OP-221	3180-41
		OP-221A	3203-47
		OP-221B	3204-1
		OP-221C	3204-27
		OP-221E	3203-48
		OP-221F	3204-2
			(Continued)

Base Number	Source	Device	Page-Line
221	PMI	OP-221G	3204-28
	Siemens	SAS221	3173-118
		TBA221	3198-37
	Siliconix	**DG221A**	★**3077**
			2616-107
		DG221C	★**3077**
			2616-108
2210	Dionics	DI2210	2663-119
	National	LH2210	3174-17
	Thomson-CSF		
		SFC2210	3174-19
	Xicor	**X2210**	★**4266**
			3758-15
		X2210M	★**4266**
			3758-16
22100	NEC	uPD22100	3216-139
	RCA	**CD22100**	★ **840**
			2622-63
	RCA	CD22100	3216-140
	SGS	M22100	3216-141
22101	**RCA**	**CD22101**	★ **840**
			2622-64
	RCA	CD22101	3216-143
22102	**RCA**	**CD22102**	★ **840**
			2622-65
	RCA	CD22102	3216-144
22103	**RCA**	**CD22103**	★ **840**
			3219-37
22104	**RCA**	**CD22104**	★ **839**
			579-156
		CD22104A	★ **839**
			579-157
22105	**RCA**	**CD22105**	★ **839**
			579-151
		CD22105A	★ **839**
			579-152
2211	AMD	LH2211	3161-4
	Exar	XR2211	3214-16
			3214-17
			3218-21
			3218-22
			¶ 282-17
			¶ 285-11
			¶ 287-2
			¶ 287-9
			¶ 308-1
		XR2211C	3214-18
			3214-138
			3218-120
			¶ 282-17
			¶ 285-11
			¶ 287-2
			¶ 287-9
			¶ 308-1
		XR2211M	3214-19
			3214-139
			3218-23
			3218-121
			¶ 282-17
			¶ 285-11
			¶ 287-2
			¶ 287-9
			¶ 308-1
	National	LH2211	3161-7
	Raytheon	XR2211C	3214-21
			3214-148
			3218-125
		XR2211M	3214-22
			3214-149
			3218-126
	Sanyo	LA2211	3238-168
	Thomson-CSF		
		SFC2211	3159-51
2212	**Exar**	**XR2212M**	★**3366**
			3214-20
			¶ 301-6
			¶ 309-13
			¶ 310-1
			¶ 310-3
	Xicor	**X2212**	★ **547**
			★**4266**
			3758-34
		X2212DM	★ **547**
			★**4266**
			3758-35

Base Number	Source	Device	Page-Line
2213	**Exar**	**XR2213C**	★**3366**
			3214-140
			¶ 310-6
		XR2213M	★**3366**
			3214-141
			¶ 310-6
2216	Exar	XR2216	3216-128
2218	Thomson-CSF		
		SFC2218	3193-53
222	Fairchild	CCD222	3234-92
	Siemens	TBA222	3193-55
2220	**TI**	**TMS2220**	★**1709**
			1339-35
	TI	TMS2220	1265-14
2228	Exar	XR2228	3235-32
			¶ 301-6
		XR2228M	3235-33
			¶ 301-6
223	Fairchild	SH223	3221-118
		uA223	3221-121
	Motorola	**LM223**	★**3531**
			3221-131
		LM223A	★**3531**
			3221-132
	National	LM223	3222-4
	SiliconG	SG223	3222-8
2230	**Exar**	**XR2230**	★**3382**
			3230-28
			3236-38
22301	**RCA**	**CD22301**	★ **840**
			3216-66
22302	**RCA**	**CD22302**	★ **840**
2232	**National**	**MA2232**	★**2049**
			2685-21
	National	MA2232	1354-43
2235	Exar	XR2235	3230-29
224	Fairchild	uA224	3180-46
	Motorola	LM224	3180-51
	National	LM224	3180-54
		LM224A	3210-51
	Raytheon	**LM224**	**3180-58**
	RCA	CA224	3180-61
	Signetics	LM224	3180-64
	SiliconG	SG224	3180-67
	TI	LM224	3180-70
2240	Exar	XR2240C	3220-18
			¶ 302-2
			¶ 315-1
		XR2240M	3220-19
			¶ 302-2
			¶ 315-1
	Fairchild	uA2240C	3220-20
		uA2240M	3220-21
	Sprague	ULN-2240A	3168-11
			¶ 300-12
	TI	**TMS2240**	★**1709**
			1338-1
			1339-38
	TI	TMS2240	1265-15
		uA2240C	3220-29
		uA2240M	3220-30
22401	**RCA**	**CD22401**	★ **838**
			3170-26
22402	RCA	CD22402	3172-63
2241	Sprague	ULN-2241A	3168-12
			¶ 300-12
			¶ 301-5
22413	**RCA**	**CD22413**	★ **840**
			3217-99
22414	**RCA**	**CD22414**	★ **840**
			3217-100
2242	Exar	XR2242C	3220-61
		XR2242M	3220-62
	Sprague	ULN-2242A	3168-13
			¶ 300-12
2243	Exar	XR2243	3220-8
	Sprague	ULN-2243A	3167-105
			3168-52
2247	**Exar**	**XR2247**	★**3371**
			★**3372**
			3155-47
2249	Sprague	ULN-2249A	3167-117
			¶ 301-5
225	Analogic	MP225A	3155-108
	Barvon	BC225	4460-46
			(Continued)

¶ Indicates page number in Application Note Directory.
★ Indicates addition data is provided on the page noted.

Base Number	Source	Device	Page-Line
225	Intech	iMDX225	1813-11
	Telefunken	U225	3217-120
2250	National	LH2250	3206-1
		LH2250C	3206-2
	SiliconG	SG2250	3190-58
2253	SiliconG	SG2253	3208-26
2256	Motorola	MBM2256	3768-9
2257	Nitron	NC2257	2686-25
			¶ 286-16
2259	Nitron	NC2259	2686-21
			¶ 286-16
226	Analogic	MP226	3155-110
2260	Nitron	NC2260	2686-26
			¶ 286-16
	Sprague	ULN-2260A	3171-1
2261	Motorola	MC2261A	2685-74
		MC2261B	2685-75
		MC2261C	2685-76
2264	Exar	XR2264	3238-93
2265	Exar	XR2265	3238-94
2266	Exar	XR2266	3238-95
227	Analogic	MP227	3155-109
	MicroPwr	**MPOP-227A**	★3529
			3203-25
		MPOP-227B	★3529
			3203-35
		MPOP-227C	★3529
			3203-49
		MPOP-227D	★3529
			3203-50
		MPOP-227E	★3529
			3203-26
		MPOP-227F	★3529
			3203-36
	PMI	**OP-227A**	★3566
			3203-27
		OP-227B	★3566
			3203-37
		OP-227C	★3566
			3203-51
		OP-227E	★3566
			3203-28
		OP-227F	★3566
			3203-38
		OP-227G	★3566
			3203-52
2270	Sprague	ULN-2270	3172-96
2271	Exar	XR2271	2663-70
2272	Exar	XR2272	2663-68
2276	Exar	XR2276	2661-1
			3234-117
2277	**Exar**	**XR2277**	★3375
			2661-23
2278	**Exar**	**XR2278**	★3375
			2661-24
2279	**Exar**	**XR2279**	★3375
			2661-25
2280	Sprague	ULN-2280B	3164-119
2283	Sprague	ULN-2283B	3164-120
2284	Exar	XR2284	2662-120
22859	**RCA**	**CD22859**	★ 840
			3219-85
2288	Exar	XR2288	2663-86
2289	NEC	uPB2289	3770-103
2290	Sprague	ULN-2290	3172-17
22V10	**AMD**	**AMPAL22V10**	★4600
			4480-106
		AMPAL22V10A	★4600
			4480-32
23	TeledyneC	CDA23	2617-106
			2618-87
	Wintek	**SDP23**	★2062
230	Dionics	DI230	2663-120
2300	Kontron	2300	1813-13
	Plessey	**CLA2300**	★4819
			4466-2
	Sanyo	LA2300	3168-107
	TI	**TMS2300**	★1709
			1339-39
	TI	TMS2300	1265-16
	Thomson-CSF		
		SFC2300	3228-31
	TRW-LSI	CA2300	3170-89
2301	Intersil	LH2301A	3209-15
	National	LH2301A	3209-16
			(Continued)

Base Number	Source	Device	Page-Line
2301	Thomson-CSF		
		SFC2301A	3199-57
	TRW-LSI	CA2301	3170-90
2304	National	COP2304	1338-52
	Thomson-CSF		
		SFC2304	3229-76
2305	Thomson-CSF		
		SFC2305	3229-49
2307	Thomson-CSF		
		SFC2307	3199-46
2308	Intersil	LH2308A	3204-22
	MicroPwr	**MPOP2308**	★3529
	National	LH2308	3209-13
		LH2308A	3204-23
	NEC	**μPD2308A**	★4096
			3783-68
		IPD2308A-35	★4096
			3783-57
		IPD2308A-45	★4096
			3783-62
	PMI	PM-2308	3209-14
		PM-2308A	3204-24
	Thomson-CSF		
		SFC2308	3199-37
		SFC2308A	3186-58
23080	**Harris**	**HA-23080**	★3464
			3156-9
2309	Thomson-CSF		
		SFC2309	3221-34
231	National	LM231	3233-125
		LM231A	3233-126
	SGS	TBA231	3180-42
	Siemens	FZH231	601-83
		SAS231L	641-71
2310	Intersil	LH2310	3174-27
	National	LH2310	3174-28
	SGS	TDA2310	3165-138
	Thomson-CSF		
		SFC2310	3199-24
231000	**NEC**		
		μPD231000-30	★4110
			3787-104
		μPD231000-35	★4110
			3787-106
2311	AMD	LH2311	3161-63
	intersil	LH2311	3162-1
	National	LH2311	3162-2
	Thomson-CSF		
		SFC2311	3160-37
2312	**OKI**	**MSL2312**	★4118
23121	VTI	VT23121	3786-110
23128	**AMI**	**S23128**	★3935
			587-173
		S23128A	★3935
			3787-26
		S23128B	★3935
			3787-6
	MicroPwr	MP23128-25	3787-1
	NEC	**μPD23128**	★4106
			3787-7
	Signetics	**23128-15**	★4200
		23128-20	★4200
			3786-117
		23128-25	★4202
			3787-8
		23128-30	★4202
			3787-18
		23128-45	★4202
	Synertek	**SY23128-2**	★4211
			3786-118
		SY23128-3	★4211
			3787-19
		SY23128A	★4211
			3787-33
		SY23128A-2	★4211
			3786-119
		SY23128A-3	★4211
			3787-20
		SYM23128	★ 535
			3787-36
		SYM23128-3	★ 535
			3787-23
		SYM23128A	★ 535
			3787-37
			(Continued)

Base Number	Source	Device	Page-Line
23128	**Synertek**	**SYM23128A-3**	★ 535
			3787-24
	Toshiba	TMM23128	3786-123
	VTI	**VT23128**	★4252
			3787-12
		VT23128A	★4252
			3786-125
		VT23128B	★4252
			3787-40
23129	**VTI**	**VT23129**	★4252
			3787-13
		VT23129A	★4252
			3786-126
		VT23129B	★4252
			3787-41
23130	**Synertek**	**SY23130**	★4211
			3787-34
		SY23130-2	★4211
			3786-120
		SY23130-3	★4211
			3787-21
		SY23130A	★4211
			3787-35
		SY23130A-2	★4211
			3786-121
		SY23130A-3	★4211
			3787-22
2315	Thomson-CSF		
		SFC2315	3202-34
2316	Analogic	MP2316	2630-18
	GTEMicro	G2316B-3	3783-123
		G2316B-4	3784-31
	Micrel	**MIC2316A**	★4765
	NEC	**μPD2316E**	★4098
			3784-34
		IPD2316E-35	★4098
			3784-16
		IPD2316E-45	★4098
			3784-35
		μPD2316E-5	★4098
			3784-17
	Rockwell	R2316B	3784-36
		R2316E	3784-37
	SGS	M2316	3784-38
	Synertek	**SY2316A**	★4211
			3783-102
		SY2316B	★4211
			3784-40
		SY2316B-2	★4211
			3783-115
		SY2316B-3	★4211
			3783-125
	Toshiba	TSU2316E	3784-45
2318	Thomson-CSF		
		SFC2318	3201-41
232	Cybernetic	CY232	2686-16
			1354-26
	Dionics	DI232	2661-74
	Fairchild	F232	3768-14
2320	SGS	TDA2320	3156-21
		TDA2320A	3165-171
2321	Analogic	MP2321	2630-19
2325	MicroPwr	MP2325-25	3787-62
		MP2325-45	3787-87
		MP2325-85	3787-99
	SMOS	2325	3787-89
23256	**AMI**	**S23256B**	★3936
			3787-65
		S23256C	★3936
			3787-47
	EXEL	XLS23256-200	3787-50
		XLS23256-300	3787-76
		XLS23256-450	3787-92
	NEC	**μPD23256**	★4108
			3787-70
	Signetics	**23256A**	★4204
	Signetics	23256A-20	3787-55
		23256A-25	3787-71
		23256A-30	3787-80
		23256A-35	3787-85
		23256A-45	3787-95
	Synertek	**SY23256-2**	★4211
			3787-56
		SY23256-3	★4211
			(Continued)

Base Number	Source	Device	Page-Line
23256	**Synertek**	**SY23256-3**	3787-81
		SY23256A	★4211
			3787-96
		SY23256A-2	★4211
			3787-57
		SY23256A-3	★4211
			3787-82
		SYM23256-3	★ 535
			3787-83
		SYM23256A	★ 535
			3787-97
		SYM23256A-3	★ 535
			3787-84
	Toshiba	TMM23256	3787-46
	VTI	**VT23256**	★4253
			3787-73
23257	EXEL	XLS23257-200	3787-51
		XLS23257-300	3787-77
		XLS23257-450	3787-93
	VTI	**VT23257**	★4253
			3787-74
23258	EXEL	XLS23258-200	3787-52
		XLS23258-300	3787-78
		XLS23258-450	3787-94
2326	MicroPwr	MP2326-25	3787-63
		MP2326-45	3787-88
		MP2326-85	3787-100
	SMOS	SMM2326	3787-90
2331	Siemens	TBB2331	3209-51
2332	GTEMicro	G2332-3	3784-111
		G2332-4	3785-10
	NEC	**μPD2332**	★4100
			3785-12
		μPD2332A	★4100
			3785-13
		μPD2332A-1	★4100
			3784-114
		IPD2332A-30	★4100
			3784-86
		IPD2332A-35	★4100
			3784-115
		IPD2332A-45	★4100
			3785-14
		μPD2332B	★4100
			3785-15
		μPD2332B-1	★4100
			3784-116
		IPD2332B-30	★4100
			3784-87
		IPD2332B-35	★4100
			3784-117
		IPD2332B-45	★4100
			3785-16
	Rockwell	R2332	3785-17
		R2332-3	3784-88
	Signetics	2332-20	3784-64
		2332-25	3784-72
		2332-30	3784-89
		2332-45	3785-18
	Synertek	**SY2332**	★4211
			3785-22
		SY2332-2	★4211
			3784-66
		SY2332-3	★4211
			3784-92
		SYM2332	★ 535
			3785-24
		SYM2332-3	★ 535
			3784-68
	Toshiba	TMM2332	3784-124
	VTI	**VT2332**	★4249
			3785-33
		VT2332A	★4249
			3784-98
2333	**AMI**	**S2333**	★3932
			3784-106
	Synertek	**SY2333**	★4211
			3785-23
		SY2333-2	★4211
			3784-67
			(Continued)

Arranged alphanumerically from left to right.

© IC MASTER 1984

Base Number	Source	Device	Page-Line
2333	**Synertek**	**SY2333-3**	★4211
			3784-93
		SYM2333	★ 535
			3785-25
		SYM2333-3	★ 535
			3784-69
	Universal	UM2333-25	3784-74
	VTI	**VT2333**	★4249
			3785-34
		VT2333A	★4249
			3784-99
234	Ferranti	ZNA234	3172-46
	National	LM234	3232-106
			3238-136
2340	National	COP2340	1338-81
2341	National	COP2341	1338-82
2342	National	COP2342	1338-83
2344	Analogic	MP2344	2636-24
235	Siemens	FZH235	601-84
2350	AMI	S2350	2686-90
			1343-99
23551	Harris	HA-23551	3232-120
236	National	LM236-2	3236-119
		LM236-5	3236-156
		LM236A-2	3236-120
		LM236A-5	3236-157
	Panasonic	AN236	3170-137
2362	SGS	M2362	3785-48
2363	Plessey	SL2363C	3157-48
2364	**AMI**	**S2364A**	★3934
			3786-50
		S2364B	★3934
			3785-99
	EXEL	XLS2364	3786-2
		XLS2364-450	3786-73
	GTEMicro	2364-3	3786-5
		2364-4	3786-42
	MicroPwr	MP2364-25	3785-74
		MP2364-35	3786-34
		MP2364-45	3786-67
		MP2364C	3786-68
	NEC	**μPD2364-30**	★4102
			3786-10
		μPD2364-35	★4102
			3786-48
		μPD2364-45	★4102
			3786-92
		μPD2364E	★4102
			★4104
			3785-64
		IPD2364E-20	★4102
			3785-65
		IPD2364E-25	★4102
			3785-105
	Plessey	SL2364C	3157-49
	SMOS	SMM2364	3786-36
	SGS	2364B	3785-46
	Signetics	**2364-15**	★4196
		2364-20	★4196
			3785-67
	Signetics	2364-25	3785-107
		2364-30	3785-114
		2364-35	3786-53
		2364-45	3786-93
	Synertek	**SY2364**	★4211
			3786-81
		SY2364-3	★4211
			3786-14
		SY2364A	★4211
			3785-96
		SY2364A-3	★4211
			3786-15
		SYM2364	★ 535
			3786-82
		SYM2364-3	★ 535
			3786-16
		SYM2364A	★ 535
			3786-83
		SYM2364A-3	★ 535
			3786-17
	Toshiba	TMM2364	3785-109
	VTI	**VT2364**	★4250
			3786-86
		VT2364A	★4250
			(Continued)

Base Number	Source	Device	Page-Line
2364	**VTI**	**VT2364A**	3786-19
		VT2364B	★4250
			3785-97
2364A2	Rockwell	R2364A2	3785-56
2364A25			
	Rockwell	R2364A25	3785-91
2364A3	Rockwell	R2364A3	3786-11
2364B2	Rockwell	R2364B2	3785-66
2364B25			
	Rockwell	R2364B25	3785-106
2364B3	Rockwell	R2364B3	3786-24
2364LP1			
	MicroPwr	MP2364LP1	3786-101
2365	EXEL	XLS2365	3786-21
		XLS2365-450	3786-88
	MCE	MCETCA2365	3175-62
	MicroPwr	MP2365-25	3785-75
		MP2365-35	3786-35
		MP2365-45	3786-69
	SMOS	SMM2365	3786-38
	Synertek	**SY2365**	★4211
			3786-94
		SY2365-3	★4211
			3786-25
		SY2365A	★4211
			3786-95
		SY2365A-3	★4211
			3786-26
		SYM2365	★ 535
			3786-96
		SYM2365-3	★ 535
			3786-27
		SYM2365A	★ 535
			3786-97
		SYM2365A-3	★ 535
			3786-28
	Toshiba	TMM2365	3785-70
	VTI	**VT2365**	★4251
			3786-99
		VT2365A	★4251
			3786-30
		VT2365B	★4251
			3785-71
2365LP1			
	MicroPwr	MP2365LP1	3786-102
2366	EXEL	XLS2366	3785-61
		XLS2366-450	3786-89
	Toshiba	TMM2366	3785-59
	VTI	**VT2366**	★4251
			3786-100
		VT2366A	★4251
			3786-31
		VT2366B	★4251
			3785-72
237	MCE	MCELM237	3229-95
	Motorola	**LM237**	★3532
			3229-90
		LM237M	★3532
			3229-91
	National	LM237	3229-98
			3230-1
	SiliconG	SG237	3229-103
	Telefunken	U237B	2661-14
			¶ 289-8
	TI	LM237	3229-106
	Unitrode	**UC237**	★3711
			3229-109
			3230-4
2370	**TI**	**TMS2370**	★1709
			1339-40
	TI	TMS2370	1265-17
2376	SMC	KR2376	2667-10
238	National	LM238	3228-83
239	**AMD**	**LM239**	3163-5
		LM239A	3162-29
	Fairchild	uA239	3163-7
		uA239A	3162-31
	Motorola	LM239	3163-10
		LM239A	3162-34
	National	LM239	3163-12
		LM239A	3162-36
	PMI	PM-239	3163-17
		PM-239A	3162-38
	Raytheon	LM239	3163-19
	RCA	**CA239**	★3599
			3163-21
			(Continued)

Base Number	Source	Device	Page-Line
239	**RCA**	**CA239A**	★3599
			3162-40
	Signetics	LM239A	3163-23
	SiliconG	SG239	3163-25
		SG239A	3162-42
	TI	LM239	3163-27
23C128	**NEC**	**μPD23C128**	★4112
			3787-107
	SSS	SCM23C128	3787-3
23C256	EXEL	XLS23C256	3787-59
	SSS	SCM23C256	3787-64
23C32	SSS	883/23C32M	3784-75
		SCM23C32	3784-77
		SCM23C32-3	3784-58
		SCM23C32-4	3784-60
		SCM23C32M	3784-78
23C33	SSS	883/23C33M	3784-76
		SCM23C33	3784-79
		SCM23C33-3	3784-59
		SCM23C33-4	3784-61
		SCM23C33M	3784-80
23C64	Hughes	HCMP23C64C	3785-115
	SSS	883/23C64M	3785-116
		SCM23C64	3785-123
		SCM23C64-3	3785-50
		SCM23C64-4	3785-51
		SCM23C64M	3785-117
	VTI	VT23C64	3785-79
23C65	SSS	SCM23C65	3785-118
23MC16			
	Supertex	23MC16A	3784-5
23MC32			
	Supertex	23MC32A	3784-102
23MC33			
	Supertex	23MC33A	3784-103
23MC64			
	Supertex	23MC64	3786-63
		23MC64A	3786-64
23MC65			
	Supertex	23MC65	3786-59
		23MC65A	3786-60
23SC16	Mitel	MD23SC16	3783-119
	Supertex	23SC16A	3783-116
		23SC16A-3	3784-6
23SC32	Supertex	23SC32A	3784-70
		23SC32A-3	3784-104
23SC33	Supertex	23SC33A	3784-71
		23SC33A-3	3784-105
23SC64	Supertex	23SC64	3785-124
		23SC64-3	3786-65
		23SC64A	3785-125
		23SC64A-3	3786-66
23SC65	Supertex	23SC65	3785-119
		23SC65-3	3786-61
		23SC65A	3785-120
		23SC65A-3	3786-62
24	Ferranti	ULA24RA	4465-28
		ULA24RB	4468-40
			4469-9
		ULA24RC	4470-27
			4470-53
		ULA24RD	4471-43
			4472-7
	Interdesign	ULA24RA	4465-29
		ULA24RB	4468-41
			4469-10
		ULA24RC	4470-28
			4470-54
		ULA24RD	4471-44
			4472-8
	Motorola	OP 24G	3184-15
	PMI	MUX-24A	2623-6
			¶ 290-5
		MUX-24B	2623-10
			¶ 290-5
		MUX-24E	2623-7
			¶ 290-5
		MUX-24F	2623-11
			¶ 290-5
	TeledyneC	CAG24	2615-109
240	Dionics	DI240	2663-121
	Exar	XRC240	3218-38
	Intech	ASH240	3238-19
	Panasonic	AN240P	3171-164
	Signetics	TCA240	3232-88
	SiliconG	SG240-20K	3225-50

Base Number	Source	Device	Page-Line
2400	**Fairchild**	**FGC2400**	★4634
			4461-11
	Harris	**HA-2400**	★3394
			3156-35
			3180-107
			3196-33
			¶ 295-20
	Motorola	**MCA2400ETL**	★4797
	TI	SE2400P	1338-5
			1263-20
	TI	**TMS2400**	★1709
			1339-41
	TI	TMS2400	1265-18
2401	AMD	AM2401	3788-27
	SiliconG	SG2401	3156-118
	Sprague	ULN-2401A	3166-11
			3239-114
	TI	TCM2401	3217-64
2402	SiliconG	SG2402	3235-45
2404	Harris	HA-2404	3156-36
			3180-108
			3196-34
	National	COP2404	1338-40
			1338-53
			1259-14
2405	Harris	HA-2405	3156-37
			3180-109
			3200-22
			¶ 295-20
24084	Hitachi	HN24084S	3764-111
241	Panasonic	AN241	3171-165
	Siemens	FZH241	602-43
		SAS241	641-72
2412	Western	WD2412	3166-161
			3167-4
2418	TRW-LSI	CA2418	3170-91
242	Dionics	DI242	2661-75
2420	**Harris**	**HA-2420**	★2955
			3238-13
			¶ 293-12
2425	**Harris**	**HA-2425**	★2955
			3238-14
			¶ 293-12
24250	National	LH24250	3206-3
		LH24250C	3208-18
2429	Sprague	ULN-2429A	3166-12
			3233-98
243	**Siliconix**	**DG243A**	★3078
			2618-115
		DG243C	★3078
			2618-116
2430	Sprague	ULN-2430M	3220-50
2435	Sprague	ULN-2435A	3166-1
			3232-71
			¶ 307-3
244	RCA	TCC-244	3773-23
	Telefunken	U244	2661-15
2440	National	COP2440	1338-84
			1259-15
		COP2440R	1338-45
			1338-89
			1259-16
2441	National	COP2441	1338-85
			1259-17
		COP2441R	1338-46
2442	National	COP2442	1338-86
			1259-18
2443	**Xicor**	**X2443**	★4267
2444	**Xicor**	**X2444**	★4265
			★4267
			3758-3
2445	Sprague	ULN-2445A	3166-2
			3232-72
245	Analogic	MN245	3237-174
	Siemens	FZH245	602-44
2455	Sprague	ULN-2455A	3166-3
			3232-73
2458	Thomson-CSF		
		SFC2458C	3208-49
		SFC2458M	3207-25
246	**Exar**	**XR246**	★3377
			3210-4
	National	LM246	3210-11
	Raytheon	LM246	3210-14

¶ Indicates page number in Application Note Directory.
★ Indicates addition data is provided on the page noted.

Base Number	Source	Device	Page-Line
247	Harris	LF247	3213-14
	Telefunken	U247B	2661-16
			¶ 289-8
2470	**TI**	**TMS2470**	**★1709**
			1339-42
	TI	TMS2470	1265-19
247A10	TI	TBP247A10M	3760-121
248	AMD	LM248	3212-27
	Fairchild	uA248	3212-29
	National	LM248	3212-31
	Raytheon	LM248	3212-33
	TI	LM248	3212-35
249	National	LM249	3212-37
	Raytheon	LM249	3212-39
24L8	MMI	HAL24L8M	4484-9
24L84	**Raytheon**	**CGA24L84**	**★ 508**
			★4822
			4462-29
			4463-2
24S10	**TI**	**TBP24S10**	**★ 542**
			★4238
			3760-99
		TBP24S10M	**★ 542**
			★4238
			3760-113
24S374	AMD	AM24S374	616-139
24S41	**TI**	**TBP24S41**	**★ 542**
			★4239
			3762-78
		TBP24S41M	**★ 542**
			★4239
			3762-79
24S81	**TI**	**TBP24S81**	**★ 542**
			★4239
			3764-17
		TBP24S81M	**★ 542**
			★4239
			3764-18
24S86	TI	TBP24S86M	3763-88
24SA10	**TI**	**TBP24SA10**	**★ 542**
			★4238
			3760-110
		TBP24SA10M	**★ 542**
			★4238
			3760-111
24SA41	**TI**	**TBP24SA41**	**★4239**
			3762-76
		TBP24SA41M	**★4239**
			3762-77
24SA81	**TI**	**TBP24SA81**	**★4240**
			3764-15
		TBP24SA81M	**★4240**
			3764-16
25	**Siliconix**	**PWM25**	**★3081**
			2622-30
		PWM25A	**★3081**
			3230-121
		PWM25C	**★3081**
			3230-122
250	Analogic	MP250M	3237-175
	ArrayTech	AT-D-250	4466-5
		AT-HSD-250	4462-35
	Cherry	CS250	2662-34
		CS250-1	2662-35
	Cybernetic	CY250	1354-25
	Intech	ASH250	3238-20
	MicroTech	SG250	4465-37
	Motorola	**LM250**	**★3532**
			3228-63
	National	LM250	3228-66
	SiliconG	SG250	3228-70
		SG250A	3228-71
	Telefunken	U250	3155-8
	Unitrode	**UC250**	**★3711**
			3228-76
2500	**AMI**	**GA2500**	**★4619**
			4461-55
	AMI	S2500A	3218-73
	Cherry	CS2500G	4473-17
	Harris	**HA-2500**	**★3396**
			3196-31
	Intersil	HA2500	3196-32
	Motorola	**MCA2500ECL**	**★4796**
			4460-3
	National	MCA2500ECL	4460-4
	Plessey	**CLA2500**	**★4619**
			(Continued)

Base Number	Source	Device	Page-Line
2500	**Plessey**	**CLA2500**	**4466-3**
	Signetics	**SCC2500SH**	**★4870**
2501	SiliconG	SG2501A	3228-21
			¶ 314-5
	Western	WD2501-01	2685-85
		WD2501-03	2685-87
		WD2501-11	2685-89
2502	AMD	AM2502C	639-10
		AM2502M	639-11
	Harris	HA-2502	3200-16
	Intersil	AM2502	639-14
		HA2502	3200-18
	National	DM2502C	639-18
		DM2502M	639-19
	SiliconG	SG2502	3230-15
	SMC	COM2502	2686-59
		COM2502H	2686-60
2503	AMD	AM2503C	639-12
		AM2503M	639-13
	Intersil	AM2503	639-15
	National	DM2503C	639-20
		DM2503M	639-21
	SiliconG	SG2503	3236-125
2504	AMD	AM2504C	639-123
		AM2504M	639-124
	Hitachi	HM2504	3772-37
		HM2504-1	3772-26
	Intersil	AM2504	639-125
	National	DM2504C	639-127
		DM2504M	639-128
25044	Hitachi	HN25044	3762-101
25045	Hitachi	HN25045	3762-105
2505	AMD	AM2505C	604-154
		AM2505M	604-155
	Harris	HA-2505	3200-17
	Intersil	HA2505	3200-19
	Raytheon	RC2505	604-156
		RM2505	604-157
2506	AMD	AM2506C	604-11
			¶ 250-11
		AM2506M	604-12
			¶ 250-11
2507	Intersil	HA2507	3201-18
25084	Hitachi	HN25084	3765-11
		HN25084S	3764-112
25085	Hitachi	HN25085	3765-13
		HN25085S	3764-121
25089	**AMI**	**S25089**	**★3340**
			3219-52
	Hitachi	HN25089S	3763-47
251	NEC	uPC251	3208-39
	Siemens	FZH251	601-67
		SAS251	641-73
	TI	**TLC251AC**	**★3689**
			3194-18
			3194-20
			3194-21
			3194-22
		TLC251BC	**★3689**
			3189-11
			3189-13
			3189-14
			3189-15
		TLC251C	**★3689**
			3200-23
			3200-25
			3200-26
			3200-27
2510	**Harris**	**HA-2510**	**★3398**
			3200-8
			¶ 293-3
	Hitachi	HM2510	3774-98
		HM2510-1	3774-64
		HM2510-2	3774-49
	Intersil	HA2510	3200-9
2511	Hitachi	HM2511	3774-102
		HM2511-1	3774-68
	Western	**WD2511-01**	**★1174**
			2685-86
		WD2511-05	**★1174**
			2685-88
		WD2511-11	**★1174**
			2685-90
2512	Harris	HA-2512	3201-19
	Intersil	HA2512	3201-20
2513	GI	R03-2513	3755-7

Base Number	Source	Device	Page-Line
2515	Harris	HA-2515	3201-25
	Intersil	HA2515	3201-26
2516	**TI**	**SMJ2516-35**	**★4232**
			3784-19
		SMJ2516-45	**★4232**
			3784-41
		TMS2516-35	**★ 543**
			★4232
			3784-42
			¶ 324-1
		TMS2516-45	**★ 543**
			★4232
			3784-42
			¶ 324-1
25168	Hitachi	HN25168S	3765-12
25169	Hitachi	HN25169S	3765-15
2517	Intersil	HA2517	3201-24
252	**TI**	**TLC252**	**★3691**
2520	**Harris**	**HA-2520**	**★3400**
			3176-89
			3200-10
			¶ 293-1
	Intersil	HA2520	3176-90
			3200-11
	Western	WD2520	1352-92
2522	Harris	HA-2522	3201-21
	Intersil	HA2522	3201-22
	National	TDA2522	3170-129
	Siemens	TDA2522	3170-176
2523	National	TDA2523	3170-130
2524	**Exar**	**XR2524**	**★3381**
			3230-30
	National	LM2524	3230-82
	RCA	**CA2524**	**★3602**
			3230-91
	SiliconG	SG2524	3230-107
			¶ 309-1
			¶ 309-3
	TI	SG2524	3231-1
	Unitrode	UC2524	3231-57
		UC2524A	3231-58
2525	**Exar**	**XR2525A**	**★3381**
			3230-31
	Harris	HA-2525	3201-27
	Intersil	HA2525	3201-28
	Motorola	**SG2525A**	**★3533**
			3230-68
	SiliconG	SG2525A	3230-108
	Unitrode	UC2525A	3231-59
2526	**Motorola**	**SG2526**	**★3533**
			3230-69
	SiliconG	SG2526	3230-109
	Unitrode	UC2526	3231-60
2527	**Exar**	**XR2527A**	**★3381**
			3230-32
	Intersil	HA2527	3201-31
	Motorola	**SG2527A**	**★3533**
			3230-70
	SiliconG	SG2527A	3230-110
	Unitrode	UC2527A	3231-61
253	Harris	LF253	3204-52
	Panasonic	AN253	3168-3
	SiliconG	SG253-05	3222-9
		SG253-08	3223-5
		SG253-12	3224-1
		SG253-15	3224-101
		SG253-18	3225-31
2530	Intersil	HA2530	3176-79
	National	TDA2530	3170-131
	Siemens	TDA2530	3170-177
2531	OEI	2531A	3155-123
2532	Plessey	TDA2532	3170-144
	SiliconG	SG2532	3229-52
	TI	**SMJ2532-30**	**★4231**
			3784-94
		SMJ2532-35	**★4231**
			3784-120
		SMJ2532-45	**★4231**
			3785-26
		TMS2532-30	**★ 543**
			★4231
			3784-95
			¶ 319-11
			¶ 324-1
		TMS2532-35	**★ 543**
			★4231
			(Continued)

Base Number	Source	Device	Page-Line
2532	**TI**	**TMS2532-35**	**3784-121**
			¶ 319-11
			¶ 324-1
		TMS2532-45	**★ 543**
			★4231
			3785-27
			¶ 319-11
			¶ 324-1
2533	AMD	AM2533	3791-102
2539	**Harris**	**HA-2539**	**★3402**
			3176-65
			3180-162
		HA-2539-2	**★3402**
			3197-43
		HA-2539-5	**★3402**
			3202-37
254	NEC	uPC254	3189-1
	Telefunken	U254	2661-17
	TI	**TLC254**	**★3693**
2540	**Harris**	**HA-2540**	**★3404**
			3176-70
			3180-160
		HA-2540-2	**★3404**
			3197-42
		HA-2540-5	**★3404**
			3202-36
	National	TDA2540	3172-122
2541	National	TDA2541	3172-123
	Sprague	UDN-2541	2682-160
25411	SSS	SCL25411	2662-149
2542	SiliconG	SG2542	3235-113
	Sprague	UDN-2542	2682-161
2543	**Exar**	**XR2543**	**★3382**
			3235-139
	SiliconG	SG2543	3235-143
			¶ 313-4
	Unitrode	**UC2543**	**★3710**
			3235-151
2544	Signetics	TDA2544	3172-155
	SiliconG	SG2544	3235-144
	Unitrode	**UC2544**	**★3710**
			3235-152
2546	Signetics	TDA2546A	3172-12
2549	SiliconG	SG2549	3232-118
255	AMD	LF255	3194-54
	MCE	MGA255	4470-13
			4475-19
			4475-20
			4475-21
	National	LF255	3194-57
	PMI	PM-255	3194-59
	Siemens	FZH255B	601-68
2550	**AMI**	**S2550A**	**★3344**
			3218-74
2556	Exar	XR2556C	3220-66
		XR2556M	3220-67
2559	**AMI**	**S2559A**	**★3339**
			3219-53
			¶ 299-17
		S2559B	**★3339**
			3219-54
			¶ 299-17
		S2559C	**★3339**
			3219-55
			¶ 299-17
		S2559D	**★3339**
			3219-56
			¶ 299-17
		S2559E	**★3339**
			3219-57
			¶ 299-17
		S2559F	**★3339**
			3219-58
			¶ 299-17
		S2559G	**★3339**
			3219-59
			¶ 299-17
		S2559H	**★3339**
			3219-60
			¶ 299-17
256	AMD	LF256	3195-1
	Cromemco	**256KZ**	**★2014**
	MicroTech	CCD256SERP	3232-58
		CCD256SPS	3232-59
	National	LF256	3195-5
	PMI	PM-256	3195-8
			(Continued)

Arranged alphanumerically from left to right.

Base Number	Source	Device	Page-Line
256	Reticon	RL256C	3234-77
		RL256EC	3234-78
		RL256G	3234-79
2560	**AMI**	**S2560A**	★3341
			3217-33
	National	TDA2560	3170-132
	Siemens	TDA2560	3170-178
2561	**AMI**	**S2561A**	★3343
			3219-21
		S2561C	★3343
			3219-22
25610	**AMI**	**S25610**	★3342
			3217-49
		S25610E	★3342
			3217-50
2562	AMI	S2562	3217-51
2563	AMI	S2563	3217-52
2564	**TI**	**SMJ2564-45**	★4229
			3785-44
		TMS2564-35	★ 543
			★4229
			3766-105
			3785-43
		TMS2564-45	★ 543
			★4229
			3766-117
			3785-45
		TMS2564-50	★ 543
			★4229
			3766-118
2567	AMI	S2567	3167-75
	Exar	**XR2567**	★3367
			3218-129
			¶ 299-3
		XR2567C	★3367
			3215-50
			¶ 299-3
		XR2567M	★3367
			3215-51
			3218-130
			¶ 299-3
2569	AMI	S2569	3219-97
		S2569A	3219-98
256X256			
	Reticon	RA256X256	3234-32
256x256			
	Reticon	RA-256x256	3234-62
257	National	LF257	3194-50
	PMI	PM-257	3194-53
	Telefunken	U257B	2661-18
			¶ 289-8
2577	Signetics	TDA2577A	3171-75
2578	Signetics	TDA2578A	3171-76
258	Cherry	CS258A	3173-80
	Motorola	LM258	3180-22
			3208-22
	National	LM258	3180-25
			3207-10
		LM258A	3180-26
			3206-5
	RCA	CA258	3180-29
			3207-12
		CA258A	3206-6
	SGS	M258	3167-79
	Signetics	LM258	3180-31
			3207-14
	TI	LM258	3180-71
2580	Sprague	UDN-2580A	3218-53
			¶ 288-13
			¶ 291-12
2585	Sprague	UDN-2585A	3218-54
			¶ 288-16
	Thomson-CSF		
		TEA2585	3172-44
			¶ 303-12
2586	Thomson-CSF		
		TEA2586	3172-45
			¶ 303-12
2588	Sprague	UDN-2588A	3218-55
259	Cherry	CS259	3173-33
	SGS	M259	3167-80
2590	National	TDA2590	3171-89
2591	National	TDA2591	3171-90
	Plessey	TDA2591	3171-93
	Telefunken	TDA2591	3171-102
2593	Signetics	TDA2593	3171-100
	Telefunken	TDA2593	3171-103
2594	Signetics	TDA2594	3171-101
2595	Signetics	TDA2595	3171-77
	Sprague	UDN-2595A	2680-47
			¶ 288-16
25L02	Intersil	AM25L02	639-16
25L03	Intersil	AM25L03	639-17
25L04	Intersil	AM25L04	639-126
25L2	**TI**	**TLC25L2**	★3691
25L32	**TI**	**TMS25L32**	★ 543
25L4	**TI**	**TLC25L4**	★3693
25LS07	**AMD**	**AM25LS07C**	★1427
			616-6
		AM25LS07M	★1427
			616-7
25LS08	**AMD**	**AM25LS08C**	★1427
			615-101
		AM25LS08M	★1427
			615-102
25LS09	**AMD**	**AM25LS09C**	★1427
			629-77
		AM25LS09M	★1427
			629-78
25LS138			
	AMD	AM25LS138C	1345-109
		AM25LS138M	1345-110
25LS139			
	AMD	AM25LS139C	612-136
		AM25LS139M	612-137
25LS14	AMD	AM25LS14AC	605-13
		AM25LS14AM	605-14
		AM25LS14C	605-15
		AM25LS14M	605-16
25LS15	AMD	AM25LS15C	603-8
		AM25LS15M	603-9
25LS168			
	AMD	AM25LS168AC	
			611-6
		AM25LS168AM	
			611-7
25LS174			
	AMD	AM25LS174C	615-168
		AM25LS174M	615-169
25LS18	AMD	AM25LS18C	1337-9
		AM25LS18M	1337-10
25LS190			
	AMD	AM25LS190C	611-90
25LS192			
	AMD	AM25LS192C	611-55
		AM25LS192M	611-56
25LS22	**AMD**	**AM25LS22C**	★1427
			605-128
		AM25LS22M	★1427
			605-129
25LS23	**AMD**	**AM25LS23C**	★1427
			632-179
	AMD	AM25LS23C	3789-124
	AMD	**AM25LS23M**	★1427
			632-180
	AMD	AM25LS23M	3790-1
25LS2513			
	AMD	**AM25LS2513C**	★1427
			639-45
	AMD	AM25LS2513C	1351-139
			1355-37
	AMD	**AM25LS2513M**	★1427
			639-46
25LS2517			
	AMD	**AM25LS2517C**	★1427
			604-45
		AM25LS2517M	★1427
			604-46
25LS2518			
	AMD	**AM25LS2518C**	★1427
			615-85
		AM25LS2518M	★1427
			615-86
25LS2519			
	AMD	**AM25LS2519C**	★1427
			615-119
		AM25LS2519M	★1427
			615-120
25LS2520			
	AMD	**AM25LS2520C**	★1427
			616-26
			(Continued)
25LS2520			
	AMD	**AM25LS2520M**	★1427
			616-27
25LS2521			
	AMD	**AM25LS2521C**	★1427
			603-100
			¶ 250-12
		AM25LS2521M	★1427
			603-101
			¶ 250-12
25LS2535			
	AMD	**AM25LS2535C**	★1427
			630-19
		AM25LS2535M	★1427
			630-20
25LS2536			
	AMD	**AM25LS2536C**	★1427
			613-82
		AM25LS2536M	★1427
			613-83
25LS2537			
	AMD	**AM25LS2537C**	★1427
			612-114
		AM25LS2537M	★1427
			612-115
25LS2538			
	AMD	**AM25LS2538C**	★1427
			613-88
		AM25LS2538M	★1427
			613-89
25LS2539			
	AMD	**AM25LS2539C**	★1427
			613-8
		AM25LS2539M	★1427
			613-9
25LS2548			
	AMD	AM25LS2548C	613-56
25LS2568			
	AMD	**AM25LS2568C**	★1427
			611-27
		AM25LS2568M	★1427
			611-28
25LS2569			
	AMD	**AM25LS2569C**	★1427
			609-74
		AM25LS2569M	★1427
			609-75
25LS273			
	AMD	**AM25LS273**	★1427
25LS299			
	AMD	**AM25LS299**	★1427
25LS373			
	AMD	**AM25LS373**	★1427
25LS374			
	AMD	**AM25LS374**	★1427
25LS377			
	AMD	**AM25LS377**	★1427
25LS378			
	AMD	AM25LS378C	616-8
		AM25LS378M	616-9
25LS379			
	AMD	AM25LS379C	615-103
		AM25LS379M	615-104
25LS381			
	AMD	**AM25LS381**	★1427
25LS399			
	AMD	AM25LS399C	629-79
		AM25LS399M	629-80
25LS533			
	AMD	**AM25LS533**	★1427
25LS534			
	AMD	**AM25LS534**	★1427
25M2	**TI**	**TLC25M2**	★3691
25M4	**TI**	**TLC25M4**	★3693
25S05	AMD	AM25S05C	604-158
		AM25S05M	604-159
25S07	**AMD**	**AM25S07C**	★1427
			616-22
		AM25S07M	★1427
			616-23
25S08	**AMD**	**AM25S08C**	★1427
			615-115
		AM25S08M	★1427
			615-116
25S09	**AMD**	**AM25S09C**	★1427
			629-109
			(Continued)
25S09	**AMD**	**AM25S09M**	★1427
			629-110
25S10	**AMD**	**AM25S10C**	★1427
			638-146
			¶ 250-2
		AM25S10M	★1427
			638-147
			¶ 250-2
	Signetics	N25S10	638-148
25S11	AMD	AM25S11C	638-112
25S12	AMD	AM25S12AC	638-113
		AM25S12AM	638-114
		AM25S12M	638-115
25S18	**AMD**	**AM25S18C**	★1427
			615-90
		AM25S18M	★1427
			615-91
25S373	**AMD**	**AM25S373**	★1427
			626-88
25S374	**AMD**	**AM25S374**	★1427
25S533	**AMD**	**AM25S533**	★1427
			626-133
25S534	**AMD**	**AM25S534**	★1427
			626-134
25S557	**AMD**	**AM25S557**	★ 701
			604-112
25S558	**AMD**	**AM25S558**	★ 701
			604-113
260	Analogic	MP260	3237-176
	Cherry	CS260	2662-40
	National	LM260	3160-2
2600	AMI	S2600	3169-11
	Fujitsu	**C2600**	★4640
	Harris	**HA-2600**	★3406
			3193-7
			¶ 293-3
			¶ 295-10
	Inmos	**IMS2600-10**	★3979
			3769-39
		IMS2600-12	★3979
			3769-49
		IMS2600-15	★3979
			3769-69
	Intersil	HA2600	3193-8
	Sanyo	LA2600	3164-26
	TI	**TMS2600**	★1709
			1339-43
	TI	TMS2600	1265-20
	TRW-LSI	CA2600	3170-92
2601	AMI	S2601	3169-12
	SMC	COM2601	2686-89
	TRW-LSI	CA2601	3170-93
2602	AMD	AM2602C	631-1
		AM2602M	631-2
	AMI	S2602	3169-13
	Harris	HA-2602	3195-48
	Intersil	HA2602	3195-50
2603	AMI	S2603	3169-14
2604	AMI	S2604	3169-15
2605	AMI	S2605	3169-16
	Harris	HA-2605	3195-49
			¶ 295-10
	Intersil	HA2605	3195-51
	SGS	L2605	3221-46
2607	Intersil	HA2607	3198-22
261	Analogic	MP261	3237-177
	National	FOR261F-1	3233-87
		FOR261F-2	3233-88
		LM261	3159-33
	Siemens	FZH261	601-69
		SAS261	641-74
2610	SGS	L2610	3223-36
26123	AMD	AM26123C	630-156
		AM26123M	630-157
2615	DDC	2615-10	2657-26
		2615-11	2657-24
		2615-12	2657-18
2616	Signetics	2616-30	3783-124
		2616-35	3784-18
		2616-45	3784-39
		2616A-25	3783-118
262	Exar	XRC262	3218-39
	Panasonic	AN262	3169-121
2620	**Harris**	**HA-2620**	★3408
			3176-45
			3180-148
			(Continued)

¶ Indicates page number in Application Note Directory.
★ Indicates addition data is provided on the page noted.

Base Number	Source	Device	Page-Line
2620	**Harris**	**HA-2620**	**3193-37**
			¶ 293-1
			¶ 293-2
			¶ 293-3
	Inmos	**IMS2620-10**	**★3979**
			3768-66
		IMS2620-12	**★3979**
			3768-79
		IMS2620-15	**★3979**
			3768-99
	Intersil	HA2620	3176-46
			3193-36
2621	Signetics	SCN2621A	3172-66
			1354-52
2622	Harris	HA-2622	3180-149
			3195-58
	Intersil	HA2622	3195-56
	Signetics	SCN2622A	3172-65
			1354-51
2625	Harris	HA-2625	3180-150
			3195-59
	Intersil	HA2625	3195-57
2627	Intersil	HA2627	3198-23
263	Cherry	CS263	3164-5
	SiliconSys	**SSI263**	**★3685**
2630	**Harris**	**HA-2630**	**★3410**
			3155-25
	Inmos	**IMS2630-12**	**★3980**
			3768-49
		IMS2630-15	**★3980**
			3768-50
		IMS2630-20	**★3980**
			3768-51
2632	Signetics	2632A-20	3784-65
		2632A-25	3784-73
		2632A-30	3784-90
		2632A-35	3784-118
		2632A-45	3785-19
		2632AE-30	3784-91
		2632AM-35	3784-119
		2632AM-45	3785-20
2635	Harris	HA-2635	3155-26
2636	Signetics	SCN2636A	3173-14
			1353-1
2637	Signetics	SCN2637A	3172-67
			3173-15
			1353-6
	Unitrode	**UC2637**	**★3710**
264	Fairchild	F264	3768-15
	Telefunken	U264	641-13
2640	**Harris**	**HA-2640**	**★3412**
			3176-123
			3193-39
2645	Harris	HA-2645	3176-124
			3198-26
2649	**National**	**HS2649**	**★4071**
			3769-121
265	Siemens	FZH265B	601-70
	Telefunken	U265	641-43
2650	**Harris**	**HA-2650**	**★3414**
			3206-11
	Signetics	2650A	1279-32
		2650A-1	1279-33
		SCN2650A	1340-152
26501	Hitachi	HD26501	1342-136
2651	National	INS2651	1346-12
	Signetics	**SCN2651C**	**★1669**
			2686-17
	Signetics	SCN2651C	1340-158
			1346-16
	SMC	COM2651	1340-162
			1346-20
2652	**Motorola**	**MC2652**	**★1511**
			2686-9
			¶ 276-5
	Motorola	MC2652	1351-111
	Motorola	**MC2652-2**	**★1511**
			2686-10
			¶ 276-5
	Signetics	**SCN2652A**	**★1670**
			2686-8
			2686-14
	Signetics	SCN2652A	1340-156
			1345-162
			1345-163
			1354-20

Base Number	Source	Device	Page-Line
2653	**Motorola**	**MC2653**	**★1512**
			2666-9
			¶ 276-5
	Motorola	MC2653	1352-22
	Signetics	**SCN2653**	**★1671**
			2666-13
		SCN2653A	**★1671**
			3218-45
	Signetics	SCN2653A	1340-157
			1346-7
			1354-27
		TDA2653	3172-88
		TDA2653A	3172-89
2655	Harris	HA-2655	3207-18
	Signetics	TDA2655A	3172-90
		TDA2655B	3172-91
266	Telefunken	U266	641-31
2661	**Motorola**	**MC2661**	**★1512**
			1351-113
			¶ 276-5
		MC2661A	**★1512**
			1353-51
			¶ 276-5
		MC2661B	**★1512**
			1353-52
			¶ 276-5
		MC2661C	**★1512**
			1353-53
			¶ 276-5
	Signetics	**SCN2661A**	**★1673**
			2685-81
	Signetics	SCN2661A	1340-159
			1346-17
			1354-31
	Signetics	**SCN2661B**	**★1673**
			2685-82
	Signetics	SCN2661B	1340-160
			1346-18
			1354-29
	Signetics	**SCN2661C**	**★1673**
			2685-83
	Signetics	SCN2661C	1340-161
			1346-19
			1354-30
	SMC	COM2661	1340-163
	Synertek	**SY2661**	**★1696**
			1340-164
2664	**Signetics**	**2664-15**	**★4198**
		2664-20	**★4198**
			3785-57
	Signetics	2664-25	3785-93
		2664A-20	3785-58
		2664A-25	3785-94
		2664A-30	3786-12
		2664A-45	3786-79
		2664AE-30	3786-13
		2664AM-35	3786-54
		2664AM-45	3786-80
267	Telefunken	U267B	2661-19
			¶ 289-8
2670	**Signetics**	**SCN2670**	**★1677**
			3783-112
		SCN2670A	**★1677**
			1353-41
		SCN2670B	**★1677**
			1353-42
	TI	**TMS2670**	**★1709**
			1339-44
	TI	TMS2670	1265-21
2670AC3			
	Signetics	SC2670AC3	1340-154
2670BC3			
	Signetics	SC2670BC3	1340-155
2671	**Signetics**	**SCN2671A**	**★1678**
			2667-14
	Signetics	SCN2671A	1341-1
			1354-40
	SiliconG	SC2671ACS	2686-18
2672	**Signetics**	**SCN2672**	**★1680**
			1344-92
		SCN2672A	**★1680**
			1341-2
			1353-2
2673	**Signetics**	**SCB2673A**	**★1681**
			1341-3
			1354-66
			(Continued)

Base Number	Source	Device	Page-Line
2673	**Signetics**	**SCB2673B**	**★1681**
			1341-4
			1354-67
		SCN2673A	**★1681**
			1341-5
			1353-9
		SCN2673B	**★1681**
			1341-6
			1353-10
2674	**Signetics**	**SCN2674**	**★1682**
			1340-153
			1352-96
2675	**Signetics**	**SCB2675**	**★1683**
			1339-116
			1352-97
2677	**Signetics**	**SCB2677A**	**★1684**
			1353-7
		SCB2677B	**★1684**
			1353-8
268	Intel	iAPX268/10	1285-18
	Interdesign	MOA-268B	2668-61
	National	LM268-10	3237-81
		LM268-5	3236-158
		LM268-6	3236-182
	SGS	M268	3167-81
2681	Motorola	MC2681	2686-92
	Signetics	**SCN2681**	**★1675**
			2685-72
	Signetics	SCN2681	1341-7
26810	Signetics	26810	2685-69
26814	Signetics	26814	2685-70
26818	Signetics	26818	2685-71
2685	SGS	L2685	3223-16
2688	AMI	S2688	3167-73
			3235-87
			¶ 302-15
	Mostek	MKA2688	4467-7
268T26	Hitachi	HD268T26	638-89
			2676-2
269	SGS	M269	3167-82
26C64	Hitachi	HN26C64-20	3766-79
26LS29	AMD	AM26LS29C	2668-45
			¶ 287-11
		AM26LS29M	2668-47
			¶ 287-11
	Signetics	AM26LS29	2668-46
26LS30	AMD	AM26LS30C	2668-58
			2671-17
			¶ 287-11
		AM26LS30M	2668-60
			2671-19
			¶ 287-11
	Signetics	AM26LS30	2668-59
			2671-18
26LS31	AMD	AM26LS31C	2671-34
			¶ 287-11
		AM26LS31M	2671-35
			¶ 287-11
	Motorola	**AM26LS31**	**★3064**
			2671-36
		AM26LS31C	**★3064**
			2671-37
		AM26LS31M	**★3064**
			2671-38
	National	DS26LS31C	2671-39
		DS26LS31M	2671-40
	Signetics	AM26LS31	2671-41
	TI	AM26LS31C	2671-42
		AM26LS31M	2671-43
26LS32	AMD	AM26LS32C	2674-25
			¶ 287-11
		AM26LS32M	2674-26
			¶ 287-11
	Motorola	**AM26LS32**	
		REC	**★3064**
	National	DS26LS32C	2674-27
		DS26LS32M	2674-28
	TI	AM26LS32C	2674-29
		AM26LS32M	2674-30
26LS33	AMD	AM26LS33C	2674-38
		AM26LS33M	2674-39
	National	DS26LS33C	2674-40
		DS26LS33M	2674-41
	TI	AM26LS33C	2674-42
		AM26LS33M	2674-43
26LS38	AMD	AM26LS38	638-8

Base Number	Source	Device	Page-Line
26S02	AMD	AM26S02C	631-15
		AM26S02M	631-16
26S10	AMD	AM26S10C	638-116
			2676-53
		AM26S10M	638-117
			2676-46
	Motorola	MC26S10	638-123
			2676-56
	National	DS26S10C	638-125
			2676-58
		DS26S10M	638-126
			2676-49
	TI	AM26S10C	638-130
			2676-60
		AM26S10M	638-131
			2676-51
26S11	AMD	AM26S11C	2676-54
		AM26S11M	638-118
			2676-47
	Motorola	MC26S11	638-124
			2676-57
	National	DS26S11C	638-127
			2676-59
		DS26S11M	638-128
			2676-50
	TI	AM	638-129
		AM26S11C	638-132
			2676-61
		AM26S11M	2676-52
26S12	AMD	AM26S12AC	2675-5
		AM26S12AM	2675-6
		AM26S12C	638-119
			2676-40
		AM26S12M	2676-41
26S64	SGS	26S64	3785-47
	Signetics	**26S64**	**★4206**
27	**Burr-Brown**	**OPA27A**	**★2850**
			3181-52
		OPA27B	**★2850**
			3182-24
		OPA27C	**★2850**
			3183-29
		OPA27E	**★2850**
			3181-53
		OPA27F	**★2850**
			3182-25
		OPA27G	**★2850**
			3183-30
	LinearTech	OP-27A	3181-44
		OP-27C	3183-27
		OP-27E	3181-45
		OP-27G	3183-28
		OP27A	3181-52
		OP27E	3181-53
	MicroPwr	**OP-27**	**★3529**
			3183-10
	Motorola	OP-27A	3181-46
		OP-27B	3182-26
		OP-27C	3183-19
		OP-27E	3181-47
		OP-27F	3182-27
		OP-27G	3183-17
		OP27A	3181-56
		OP27E	3181-57
	PMI	**OP-27A**	**★3566**
			3181-48
		OP-27B	**★3566**
			3182-28
		OP-27C	**★3566**
			3183-20
		OP-27E	**★3566**
			3181-49
		OP-27F	**★3566**
			3182-29
		OP-27G	**★3566**
			3183-18
	Raytheon	**OP-27A**	**★3592**
			3181-50
		OP-27B	**★3592**
			3182-30
		OP-27C	**★3592**
			3183-25
		OP-27E	**★3592**
			3181-51
		OP-27F	**★3592**
			3182-31
			(Continued)

Arranged alphanumerically from left to right.

© IC MASTER 1984

Base Number	Source	Device	Page-Line
27	**Raytheon**	**OP-27G**	★3592
			3183-26
	Siliconix	**PWM27**	★3081
			2622-31
		PWM27A	★3081
			3230-123
		PWM27C	★3081
			3230-124
	TeledyneC	CAG27	2615-84
		CAG27-10	2615-85
270	Analogic	MP270	3237-178
	HiLevel	DS270EMULYZER	
			1813-2
	RCA	CA270	3172-136
2700	**AD**	**AD2700J**	★2842
			3237-29
		AD2700L	★2842
			3237-30
		AD2700S	★2842
			3237-31
		AD2700U	★2842
			3237-32
	HyComp	HC2700	3237-58
		HC2700-883	3237-59
	Oliver	UPP-2700	4355-8
2701	AD	AD2701J	3237-33
		AD2701L	3237-34
		AD2701S	3237-35
		AD2701U	3237-36
	HyComp	HC2701	3237-60
		HC2701-883	3237-61
2702	AD	AD2702L	3237-102
		AD2702S	3237-103
		AD2702U	3237-104
	HyComp	HC2702	3237-110
		HC2702-883	3237-111
2706	**Unitrode**	**UC2706**	★3710
2708	AMD	AM2708	3763-122
		AM2708-13	3763-116
	Fairchild	F2708	3763-124
		F2708-1	3763-117
	Motorola	MCM2708	3763-126
	OKI	**MSM2708**	★4118
	TI	**SMJ2708-35**	★4234
			3783-58
		SMJ2708-45	★4234
			3783-63
		TMS2708-35	★ 543
			★4234
			3763-118
			3783-59
		TMS2708-45	★ 543
			★4234
			3764-3
			3783-65
2709	AMI	S2709	3166-119
	Thomson-CSF		
		SFC2709A	3191-49
		SFC2709M	3197-17
271	Analogic	MP271	3237-179
	Intech	ASH271	3238-21
	NEC	uPC271	3160-30
	Siemens	FZH271	602-2
	TI	**TLC271AC**	★ 541
			★3687
			★3689
			3194-19
			3194-23
		TLC271BC	★ 541
			★3687
			★3689
			3189-12
			3189-16
		TLC271C	★ 541
			★3687
			★3689
			3200-24
			3200-28
2710	**AD**	**AD2710K**	★2842
			3237-37
		AD2710L	★2842
			3237-38
	HyComp	HC2710	3237-62
		HC2710-883	3237-63
	Thomson-CSF		
		SFC2710	3159-28
2711	HyComp	HC2711	3237-64
		HC2711-883	3237-65
	Thomson-CSF		
		SFC2711	3161-41
2712	AD	AD2712K	3237-105
		AD2712L	3237-106
	HyComp	HC2712	3237-112
		HC2712-883	3237-113
27128	**AMD**	**AM27128**	★3929
			3766-128
		AM27128-1	★3929
			3766-119
		AM27128-15	★3929
			3766-120
		AM27128-2	★3929
			3766-121
		AM27128-20	★3929
			3766-122
			3766-123
		AM27128-25	★3929
			3767-1
			3767-2
		AM27128-3	★3929
			3767-10
		AM27128-30	★3929
			3767-11
		AM27128-4	★3929
			3767-21
		AM27128-45	★3929
			3767-22
			3767-23
	Fujitsu	MBM27128-25	3767-3
		MBM27128-30	3767-12
		MBM27128-30W	
			3767-17
	Intel	27128-25	3767-5
		27128-3	3767-14
		27128-30	3767-9
		27128-4	3767-25
		27128-45	3767-19
		M27128	3766-124
		M27128-45	3767-20
	Signetics	**27128**	★4194
	TI	**TMS27128-20**	★4227
			3786-122
		TMS27128-25	★4227
			3787-9
		TMS27128-30	★4227
			3787-25
		TMS27128-45	★4227
			3787-38
	Toshiba	TMM27128-20	3786-124
		TMM27128-25	3787-11
2713	Analogic	MP2713C	2635-39
2714	Analogic	MP2714C	2635-44
2716	AMD	AM2716	3765-70
		AM2716-1	3765-51
		AM2716-2	3765-61
		AM2716M	3765-71
	Fairchild	F2716	3765-72
		F2716-1	3765-52
	Intel	2716	3765-75
			¶ 260-17
		2716-1	3765-53
			¶ 260-17
		2716-2	3765-63
			¶ 260-17
		2716-5	3765-85
			¶ 260-17
		2716-6	3765-87
			¶ 260-17
		M2716	3765-76
	Mostek	MK2716-12	3765-88
		MK2716-5	3765-45
		MK2716-6	3765-54
		MK2716-7	3765-64
		MK2716-8	3765-78
	Motorola	MCM2716-35	3765-55
	National	MM2716	3765-79
		MM2716-1	3765-57
		MM2716-2	3765-65
		NMC2716E	3765-80
	NEC	uPD2716	3765-82
	OKI	**MSM2716**	★4118
	Synertek	SY2716	3765-83
		SY2716-1	3765-59
			(Continued)
2716	Synertek	SY2716-2	3765-67
	TI	**TMS2716-30**	★4233
			3765-47
		TMS2716-45	★4233
			3765-84
272	Analogic	MP272	3237-180
	Interdesign	MOB-272	2672-64
	TI	**TLC272**	★ 541
			★3691
2720	**AD**	**AD2720**	★2842
			3237-107
		AD2720A	★2842
			3237-39
		AD2720C	★2842
			3237-40
		AD2720S	★2842
			3237-41
		AD2720T	★2842
			3237-42
	Harris	**HA-2720**	★3416
			3193-1
2723	Thomson-CSF		
		SFC2723C	3229-24
		SFC2723EC	3229-25
2725	Harris	HA-2725	3195-29
27256	**AMD**	**AM27256**	★3930
			3767-35
		AM27256-1	★3930
			3767-29
		AM27256-2	★3930
			3767-31
		AM27256-20	★3930
			3767-32
		AM27256-25	★3930
			3767-36
		AM27256-3	★3930
			3767-40
		AM27256-30	★3930
			3767-41
		AM27256-4	★3930
			3767-43
		AM27256-45	★3930
			3767-44
	Intel	**27256**	★4025
			3767-37
2730	**Harris**	**HA-2730**	★3419
			3206-68
2731	SiliconG	SG2731	3173-64
			3235-12
			¶ 307-9
2732	**AMD**	**AM2732A**	★3926
			3766-35
		AM2732A-1	★3926
			3766-27
		AM2732A-15	★3926
			3766-28
		AM2732A-2	★3926
			3766-29
		AM2732A-20	★3926
			3766-30
		AM2732A-25	★3926
			3766-36
			3766-37
		AM2732A-3	★3926
			3766-43
		AM2732A-30	★3926
			3766-44
		AM2732A-4	★3926
			3766-54
		AM2732A-45	★3926
			3766-55
			3766-56
	Fairchild	F2732	3766-57
	Fujitsu	MBM2732A-20	
			3766-31
		MBM2732A-25	
			3766-38
		MBM2732A-30	
			3766-45
		MBM2732A-30X	
			3766-46
	Intel	2732A	3766-40
		2732A-2	3766-33
		2732A-20	3766-34
		2732A-25	3766-41
		2732A-3	3766-49
			(Continued)
2732	Intel	2732A-30	3766-50
		2732A-4	3766-60
		M2732A-25	3758-111
		M2732A-45	3758-118
	National	**MA2732**	★2050
	NEC	uPD2732	3766-63
	TI	**TMS2732A-30**	★4230
			3784-96
		TMS2732A-35	★4230
			3784-122
		TMS2732A-45	★4230
			3785-28
		TMS2732NLL	★4230
			1339-34
	Toshiba	TMM2732	3766-64
		TMM2732-2	3766-42
2734	Analogic	MP2734	2635-43
2735	Analogic	MP2735-1	2636-5
		MP2735-2	2636-4
	Harris	HA-2735	3206-53
274	**TI**	**TLC274**	★ 541
			★3693
2740	**Harris**	**HA-2740**	★3422
			3210-8
		HA-2740-2	★3422
			3210-50
		HA-2740-5	★3422
			3211-27
2741	Thomson-CSF		
		SFC2741	3175-38
		SFC2741C	3198-39
		SFC2741M	3196-40
2742	AMI	S2742	3169-17
			¶ 307-8
2743	AMI	S2743	3169-18
			¶ 307-8
2747	AMI	S2747	3169-19
	Thomson-CSF		
		SFC2747C	3208-48
		SFC2747M	3207-24
2748	**AMI**	**S2748**	3169-20
	Thomson-CSF		
		SFC2748C	3198-40
		SFC2748M	3196-41
275	Cybernetic	CYP275	4351-10
	Siemens	FZH275	602-3
27519	**Motorola**	**MCM27519**	★4047
275191	**Motorola**	**MCM275191**	★4047
275291	**Motorola**	**MCM275291**	★4047
27545	**Motorola**	**MCM27545**	★4047
27547	**Motorola**	**MCM27547**	★4047
2758	National	MM2758	3763-121
2761	Siemens	TAA2761	3176-24
	Thomson-CSF		
		SFC2761C	3199-14
		SFC2761M	3193-60
2762	Siemens	TAA2762	3176-25
			3206-25
2764	**AMD**	**AM2764-20**	★3928
			3766-77
		AM2764-25	★3928
			3766-86
		AM2764-30	★3928
			3766-97
		AM2764-45	★3928
			3766-109
	Fairchild	2764	3766-87
	Fujitsu	MBM2764-20	3766-78
		MBM2764-25	3766-88
		MBM2764-30	3766-98
		MBM2764-30X	
			3766-99
	Intel	2764	3766-90
		2764-2	3766-80
		2764-25	3766-91
		2764-3	3766-100
		2764-30	3766-101
		2764-4	3766-111
		2764-45	3766-112
		M2764-25	3759-7
		M2764-45	3759-17
	OKI	**MSM2764A**	★4118
			3766-114
	TI	**TMS2764H-20**	★4228
			3785-69
		TMS2764H-25	★4228
			(Continued)

¶ Indicates page number in Application Note Directory.
★ Indicates addition data is provided on the page noted.

Base Number	Source	Device	Page-Line
2764	TI	TMS2764H-25	3785-108
		TMS2764H-30	★4228
			3786-29
		TMS2764H-45	★4228
			3786-98
	Toshiba	TMM2764	3759-5
		TMM2764-2	3766-83
2765	Siemens	TAA2765	3176-26
277	Exar	XRC277	3218-40
27720	AD	AD27720B	3237-43
2776	Thomson-CSF		
		SFC2776C	3198-17
		SFC2776M	3195-27
278	Panasonic	AN278	3168-39
2791	Western	WD2791	1353-109
		WD2791-02	1353-95
2793	Western	WD2793-02	1353-110
2795	Western	WD2795-02	1353-111
2797	Western	WD2797-02	1353-112
27A08	Motorola	MCM27A08	3763-114
27A16	Motorola	TMS27A16	3765-46
27C128	Signetics	27C128	★4191
27C16	National	NMC27C16-45	3765-81
		NMC27C16-55	3765-86
27C256	Fujitsu	MBM27C256-20	
			3767-30
		MBM27C256-25	
			3767-34
		MBM27C256-30	
			3767-39
27C32	National	NMC27C32-35	3766-52
		NMC27C32-45	3766-62
		NMC27C32-55	3766-66
27C64	Fujitsu	MBM27C64-25	3766-84
			¶ 319-12
		MBM27C64-30	3766-94
			¶ 319-12
		MBM27C64-30W	
			3766-95
			¶ 319-12
	Hitachi	HN27C64-20	★3974
			3766-76
		HN27C64-25	★3974
			3766-85
		HN27C64-30	★3974
			3766-96
	Signetics	27C64	★4187
27L08	TI	SMJ27L08-45	★4234
			3783-64
		TMS27L08-45	★543
			★4234
			3764-4
			3783-66
27L16	Motorola	MCM27L16-35	3765-56
27L2	TI	TLC27L2	★3691
27L4	TI	TLC27L4	★3693
27LS00	AMD	AM27LS00AC	3772-18
		AM27LS00AM	3772-27
		AM27LS00C	3772-28
		AM27LS00LC	3772-51
		AM27LS00LM	3772-53
		AM27LS00M	3772-38
27LS01	AMD	AM27LS01AC	3772-23
		AM27LS01AM	3772-24
		AM27LS01LC	3772-50
		AM27LS01LM	3772-52
		AM27LS01M	3772-35
27LS02	AMD	AM27LS02C	3771-13
			3771-36
		AM27LS02M	3771-40
27LS03	AMD	AM27LS03C	3771-16
			3771-37
		AM27LS03M	3771-41
27LS06	AMD	AM27LS06C	3771-14
		AM27LS06M	3771-19
27LS07	AMD	AM27LS07C	3771-17
		AM27LS07M	3771-29
27LS18	AMD	AM27LS18C	3760-36
27LS184			
	AMD	AM27LS184M	3764-47
27LS185			
	AMD	AM27LS185C	3764-40
		AM27LS185M	3764-48
27LS19	AMD	AM27LS19C	3760-42
		AM27LS19M	3760-57
27M2	TI	TLC27M2	★3691
27M4	TI	TLC27M4	★3693
27PS181			
	AMD	AM27PS181	3763-15
27PS185			
	AMD	AM27PS185C	3764-41
		AM27PS185M	3764-49
27PS191			
	AMD	AM27PS191C	3764-114
		AM27PS191M	3765-21
27PS281			
	AMD	AM27PS281	3763-16
27PS291			
	AMD	AM27PS291AM	
			3765-22
		AM27PS291C	3764-115
27PS41	AMD	AM27PS41	3765-103
27S02	AMD	AM27S02AC	3770-81
		AM27S02AM	3770-88
		AM27S02C	3770-95
		AM27S02M	3770-116
27S03	AMD	AM27S03AC	3770-84
		AM27S03AM	3770-91
		AM27S03C	3770-106
		AM27S03M	3770-117
27S06	AMD	AM27S06AC	3770-82
		AM27S06AM	3770-89
		AM27S06C	3770-83
		AM27S06M	3770-90
27S07	AMD	AM27S07AC	3770-85
		AM27S07AM	3770-92
		AM27S07C	3770-86
		AM27S07M	3770-93
27S12	AMD	AM27S12AC	3761-26
		AM27S12AM	3761-28
		AM27S12C	3761-33
		AM27S12M	3761-50
27S13	AMD	AM27S13AC	3761-27
		AM27S13AM	3761-29
		AM27S13C	3761-36
		AM27S13M	3761-53
27S15	AMD	AM27S15C	3762-11
		AM27S15M	3762-52
27S18	AMD	AM27S18AC	3760-20
		AM27S18AM	3760-24
		AM27S18C	3760-30
		AM27S18M	3760-37
27S180	AMD	AM27S180AC	★3905
			3763-25
		AM27S180AM	★3905
			3763-42
		AM27S180C	★3905
			3763-59
		AM27S180M	★3905
			3763-92
27S181	AMD	AM27S181AC	★3905
			3763-30
		AM27S181AM	★3905
			3763-44
		AM27S181C	★3905
			3763-65
		AM27S181M	★3905
			3763-94
	Motorola	MCM27S181	★4047
27S184	AMD	AM27S184AC	3764-7
		AM27S184AM	3764-19
		AM27S184C	3764-25
		AM27S184M	3764-32
27S185	AMD	AM27S185AC	3764-9
		AM27S185AM	3764-21
		AM27S185C	3764-26
		AM27S185M	3764-34
27S19	AMD	AM27S19AC	3760-22
		AM27S19AM	3760-27
		AM27S19C	3760-32
		AM27S19M	3760-43
27S190	AMD	AM27S190AC	3764-82
		AM27S190C	3764-108
		AM27S190M	3765-18
27S191	AMD	AM27S191	3764-116
		AM27S191A	3764-84
		AM27S191AM	3764-117
	Motoroia	MCM27S191	3764-89
27S20	AMD	AM27S20AC	3760-69
		AM27S20AM	3760-73
		AM27S20C	3760-77
		AM27S20M	3760-100
27S21	AMD	AM27S21AC	3760-70
		AM27S21AM	3760-75
		AM27S21C	3760-80
		AM27S21M	3760-106
27S25	AMD	AM27S25AC	3761-83
		AM27S25AM	3761-84
		AM27S25C	3761-86
		AM27S25M	3761-88
	Motorola	MCM27S25	★4047
27S27	AMD	AM27S27C	3761-85
		AM27S27M	3761-87
	Motorola	MCM27S27	★4047
27S28	AMD	AM27S28AC	3761-92
		AM27S28AM	3761-103
		AM27S28C	3761-119
		AM27S28M	3762-16
27S280	AMD	AM27S280AC	★3905
			3763-26
		AM27S280AM	★3905
			3763-43
		AM27S280C	★3905
			3763-60
		AM27S280M	★3905
			3763-93
27S281	AMD	AM27S281AC	★3905
			3763-31
		AM27S281AM	★3905
			3763-45
		AM27S281C	★3905
			3763-66
		AM27S281M	★3905
			3763-95
	Motorola	MCM27S281	★4047
27S29	AMD	AM27S29AC	3761-98
		AM27S29AM	3761-109
		AM27S29C	3761-121
		AM27S29M	3762-22
	Motorola	MCM27S29	★4047
27S290	AMD	AM27S290AC	3764-83
		AM27S290AM	3764-109
		AM27S290C	3764-110
27S291	AMD	AM27S291	3764-118
		AM27S291A	3764-85
		AM27S291AM	3764-119
		AM27S291M	3765-23
	Motorola	MCM27S291	3764-90
27S30	AMD	AM27S30AC	3761-94
		AM27S30AM	3761-106
		AM27S30C	3761-120
		AM27S30M	3762-26
27S31	AMD	AM27S31AC	3761-100
		AM27S31AM	3761-115
		AM27S31C	3761-123
		AM27S31M	3762-23
	Motorola	MCM27S31	★4047
27S32	AMD	AM27S32AC	3762-68
		AM27S32AM	3762-82
		AM27S32C	3762-98
		AM27S32M	3762-120
27S33	AMD	AM27S33AC	3762-69
			3762-71
		AM27S33AM	3762-86
		AM27S33C	3762-102
		AM27S33M	3762-121
27S35	AMD	AM27S35AC	★3901
			3763-17
		AM27S35AM	★3901
			3763-18
		AM27S35C	★3901
			3763-19
		AM27S35M	★3901
			3763-20
	Motorola	MCM27S35	★4047
27S37	AMD	AM27S37	★3901
			3763-27
		AM27S37A	★3901
			3763-21
	Motorola	MCM27S37	★4047
27S40	AMD	AM27S40	★3907
			3765-101
		AM27S40A	★3907
			3765-90
		AM27S40AM	★3907
			3765-102
		AM27S40M	★3907
			3765-114
27S41	AMD	AM27S41	★3907
			3765-104
		AM27S41A	★3907
			3765-91
		AM27S41AM	★3907
			3765-105
		AM27S41M	★3907
			3765-115
27S43	AMD	AM27S43	★3908
			3765-121
		AM27S43A	★3908
			3765-118
27S45	AMD	AM27S45	★3904
			3764-70
		AM27S45A	★3904
			3764-71
	Motorola	MCM27S45	3764-80
27S47	AMD	AM27S47	★3904
			3764-72
		AM27S47A	★3904
			3764-73
	Motorola	MCM27S47	3764-81
27S65	AMD	AM27S65	★3902
			3762-65
27S75	AMD	AM27S75	★3902
			3764-5
27S85	AMD	AM27S85	★3902
			3765-89
28	PMI	MUX-28A	2624-30
			¶ 290-5
		MUX-28B	2624-32
			¶ 290-5
		MUX-28E	2624-31
			¶ 290-5
		MUX-28F	2624-33
			¶ 290-5
	TeledyneC	CDA28A	2621-20
280	Signetics	TCA280A	3239-103
2800	Cherry	CS2800	4473-15
	Motorola	MCA2800ALS	★4797
			4460-35
	National	MA2800	★2051
			1955-10
	National	MCA2800ALS	4460-36
	TRW-LSI	CA2800	3156-56
28000	Oliver	UPP-28000-ZIF	★4401
			4355-9
		UPP-28000	
		Scoop	★4401
			4355-10
2801	Motorola	MC2801	3171-59
		ULN2801	2680-31
	Motorola	ULN2801A	★3064
	Sprague	ULN-2801A	2680-32
			3158-111
		ULS-2801H	2680-35
			3158-116
	Synertek	SY2801A	3758-17
2802	AMD	AM2802C	3788-7
		AM2802M	3788-8
	Motorola	MCM2802	3758-11
		ULN2802	2680-38
	Motorola	ULN2802A	★3064
	Sprague	ULN-2802A	2680-39
			3158-112
		ULS-2802H	2680-42
			3158-117
	Synertek	SY2802E	3758-36
2803	AMD	AM2803C	3788-17
		AM2803M	3788-18
	Motorola	ULN2803	2680-12
	Motorola	ULN2803A	★3064
	Sprague	ULN-2803A	2680-15
			3158-113
		ULS-2803H	2680-21
			3158-118
2804	AMD	AM2804C	3788-25
		AM2804M	3788-26
	Motorola	ULN2804	2680-1
	Motorola	ULN2804A	★3064
	Sprague	ULN-2804A	2680-2
			3158-114
		ULS-2804H	2680-5
			3158-119
	Xicor	X2804	★4267
			★4268
			(Continued)

Arranged alphanumerically from left to right.

Base Number	Source	Device	Page-Line
2804	**Xicor**	**X2804**	**3762-59**
		X2804A	**★4267**
			★4268
			3758-40
			¶ 318-15
		X2804A-45	**★4267**
			★4268
			3758-43
		X2804AM-45	**★4267**
			★4268
			3758-44
2805	AMD	AM2805C	3788-13
		AM2805M	3788-11
	Sprague	ULN-2805A	2680-16
			3158-115
		ULS-2805H	2680-22
			3158-120
	Thomson-CSF		
		SFC2805	3221-77
2806	AMD	AM2806C	3788-21
		AM2806M	3788-19
	Thomson-CSF		
		SFC2806	3222-47
2807	AMD	AM2807C	3788-14
		AM2807M	3788-12
2808	AMD	AM2808C	3788-22
		AM2808M	3788-20
	Thomson-CSF		
		SFC2808	3222-112
2809	AMD	AM2809C	3791-86
		AM2809M	3791-82
	AMI	S2809	2661-76
281	National	AM281	2616-1
			2616-5
			2616-23
	Siemens	FZH281	601-126
	Siliconix	**DG281A**	**★3077**
			2616-49
		DG281B	**★3077**
			2616-50
2810	AMD	AM2810C	3791-83
		AM2810M	3791-84
	GI	ER2810	3758-56
			¶ 317-12
		ER2810HR	3758-57
			¶ 317-12
	TRW-LSI	CA2810	3156-57
28101	**OKI**	**MSM28101**	**★4118**
2811	Sprague	ULN-2811A	2680-33
			3158-121
		ULS-2811H	2680-36
			3158-126
2812	AMD	AM2812AC	3757-20
		AM2812AL	3757-21
		AM2812C	3757-16
		AM2812L	3757-17
	Plessey	MJ2812	3757-18
	Sprague	ULN-2812A	2680-40
			3158-122
		ULS-2812H	2680-43
			3158-127
	Thomson-CSF		
		SFC2812	3223-82
2813	AMD	AM2813AC	3757-25
		AM2813AL	3757-26
		AM2813C	3757-22
		AM2813L	3757-23
	Plessey	MJ2813	3757-24
	Sprague	ULN-2813A	2680-17
			3158-123
		ULS-2813H	2680-23
			3158-128
2814	AMD	AM2814C	3791-87
		AM2814M	3791-88
	Plessey	MJ2814	3757-19
	Sprague	ULN-2814A	2680-3
			3158-124
		ULS-2814H	2680-6
			3158-129
2815	Intel	2815	3758-62
		2815-3	3758-84
		2815-4	3758-98
	Sprague	ULN-2815A	2680-18
			3158-125
		ULS-2815H	2680-24
			3158-130
2816	EXEL	XL2816A-250	3758-61
		XLS2816A	3758-77
		XLS2816A-350	
			3758-83
	Intel	2816	3758-63
		2816-3	3758-85
		2816-4	3758-99
		2816A	3758-64
		2816A-3	3758-86
		2816A-4	3758-100
		M2816A	3758-65
	National	NMC2816-25	3758-66
		NMC2816-35	3758-87
		NMC2816-45	3758-101
		NMC2816E-25	3758-67
		NMC2816E-35	3758-88
		NMC2816E-45	3758-102
	OKI	MSM2816	3758-76
	Synertek	SY2816	3758-72
	Xicor	**X2816**	**★ 547**
			★4267
			★4268
			3758-48
		X2816A	**★ 547**
			★4267
			★4268
			3758-80
			¶ 318-15
		X2816A-35	**★ 547**
			★4267
			★4268
			3758-93
			3765-49
		X2816A-45	**★ 547**
			★4267
			★4268
			3758-104
			3765-68
		X2816AM	**★ 547**
			★4267
			★4268
			3758-81
		X2816AM-35	**★ 547**
			★4267
			★4268
			3765-50
		X2816AM-45	**★ 547**
			★4267
			★4268
			3765-69
2817	**Intel**	**2817**	**★4024**
			3758-74
		2817-3	**★4024**
			3758-96
		2817-4	**★4024**
			3758-105
	Intel	M2817	3758-106
2818	Thomson-CSF		
		SFC2818	3225-2
282	Analogic	MP282A	3237-181
	National	AM282	2616-37
			2616-41
2820	TRW-LSI	CA2820	3156-58
2821	Sprague	ULN-2821A	2680-34
			3158-135
		ULS-2821H	2680-37
			3158-140
28211	**AMI**	**S28211A**	**★3349**
			3218-63
		S28211B	**★3349**
			3218-64
28214	AMI	S28214A	1351-116
			1355-14
28215	AMI	S28215	3217-56
28216	AMI	S28216	3217-63
2822	Sprague	ULN-2822A	2680-41
			3158-136
		ULS-2822H	2680-44
			3158-141
2823	Sprague	ULN-2823A	2680-19
			3158-137
		ULS-2823H	2680-25
			3158-142
2824	Sprague	ULN-2824A	2680-4
			3158-138
		ULS-2824H	2680-7
			(Continued)
2824	Sprague	ULS-2824H	3158-143
	Thomson-CSF		
		SFC2824	3225-89
2825	AMD	AM2825C	3788-34
		AM2825M	3788-32
	Micrel	**MIC2825**	**★4765**
	Sprague	ULN-2825A	2680-20
			3158-139
		ULS-2825H	2680-26
			3158-144
2826	AMD	AM2826C	3788-35
		AM2826M	3788-33
2827	AMD	AM2827C	3788-38
		AM2827M	3788-37
	Micrel	**MIC2827**	**★4765**
2830	TRW-LSI	CA2830	3156-59
2832	Motorola	MCM2832	3758-107
2833	AMD	AM2833C	3791-103
		AM2833M	3791-104
2834	**Unitrode**	**UC2834**	**★3710**
			3234-132
284	National	AM284	2620-49
			2620-53
	Siliconix	**DG284A**	**★3079**
			2620-88
		DG284B	**★3079**
			2620-89
2840	Siemens	TDA2840	3172-6
	TRW-LSI	CA2840	3156-60
	Unitrode	UC2840	3231-62
	Western	**WD2840**	**★1172**
			1354-11
2841	AMD	AM2841A	3757-40
		AM2841C	3757-36
		AM2841M	3757-37
	Plessey	MJ2841	3757-39
	Siemens	TDA2841	3172-7
	SiliconG	SG2841	2682-133
	Sprague	UDN-2841B	3157-118
	TI	UDN2841	3157-132
2842	TRW-LSI	CA2842	3156-61
	Unitrode	UC2842	3231-63
2845	Sprague	UDN-2845B	3157-119
			¶ 288-13
	TI	UDN2845	3157-133
2846	Unitrode	UC2846	3232-125
2847	AMD	AM2847C	3791-71
		AM2847M	3791-68
	Fairchild	F2847	3791-72
		F2847L	3791-73
		F2847LM	3791-69
		F2847M	3791-70
	Unitrode	UC2847	3232-126
285	**Motorola**	**LM285-1**	**★3535**
			3236-61
		LM285-2	**★3535**
			3236-105
	National	AM285	2620-75
			2620-79
		LM285	3236-65
		LM285-1	3236-78
		LM285-2	3236-121
	SGS	LS285A	3218-90
			3219-99
	Siemens	FZH285B	601-127
2850	TRW-LSI	CA2850	3156-62
2851	TRW-LSI	CA2851	3156-63
2855	AMD	AM2855	3791-89
2856	AMD	AM2856	3791-96
2857	AMD	AM2857C	3791-99
2859	AMI	S2859	3219-61
286	**AMD**	**iAPX286**	**★1430**
			1283-33
	Intel	iAPX286/10	1349-4
			1285-19
		iAPX286/20	1285-20
2860	AMI	S2860	3219-62
2861	Thomson-CSF		
		SFC2861AC	3201-49
		SFC2861AM	3199-13
		SFC2861C	3201-45
		SFC2861M	3193-61
2864	EXEL	XLS2864A-200	
			3759-2
		XLS2864A-250	
			3759-6
			(Continued)
2864	EXEL	XLS2864A-300	
			3759-10
		XLS2864A-350	
			3759-15
	National	NMH2864	3759-18
		NMH2864C	3759-19
	Xicor	2864A	3759-16
	Xicor	**X2864**	**★4267**
			★4269
287	National	AM287	2618-44
			2618-48
	Siliconix	**DG287A**	**★3078**
			2618-85
		DG287B	**★3078**
			2618-86
	TI	TL287C	3204-25
		TL287M	3204-26
2870	Mostek	MK2870	1341-55
	TRW-LSI	CA2870	3156-64
2871	TRW-LSI	CA2871	3156-65
2872	Western	CR2872	1339-50
2875	TRW-LSI	CA2875	3156-66
2876	TRW-LSI	CA2876	3156-67
2877	National	LM2877	3165-72
2878	National	LM2878	3165-86
	Sprague	**UDN-2878**	**★3088**
			2682-82
2879	National	LM2879	3165-87
	Sprague	**UDN-2879**	**★3088**
			2682-132
288	National	AM288	2618-72
			2618-76
	SGS	LS288	3218-99
	TI	TL288C	3205-53
		TL288M	3205-54
2880	TRW-LSI	CA2880	3156-68
2886	Sprague	UTN-2886B	3158-149
2887	National	LM2887	3170-122
2888	Sprague	UTN-2888A	3158-150
2889	National	LM2889	3172-119
2895	National	LM2895	3164-86
2896	AMD	AM2896C	3791-79
		AM2896M	3791-78
	National	LM2896	3165-73
28L166	**TI**	**TBP28L166**	**★4243**
			3765-33
28L22	**TI**	**TBP28L22**	**★ 542**
			★4240
			3761-16
		TBP28L22M	**★ 542**
			★4240
			3761-21
28L42	**TI**	**TBP28L42**	**★ 542**
			★4241
			3761-126
28L45	TI	TBP28L45	3761-127
28L46	**TI**	**TBP28L46**	**★4242**
28L85	TI	TBP28L85	3763-73
28L86	**TI**	**TBP28L86**	**★ 542**
			★ 543
			★4242
			3763-90
		TBP28L86M	**★ 542**
			★ 543
			★4242
			3763-91
28LA22	**TI**	**TBP28LA22**	**★4240**
			3761-12
		TBP28LA22M	**★4240**
			3761-19
28P166	TI	TBP28P166	3764-76
28P42	TI	TBP28P42	3761-89
28P45	TI	TBP28P45	3761-90
28P85	TI	TBP28P85	3763-23
28R165	TI	TBP28R165	3764-6
28R166	TI	TBP28R166	3764-74
28R45	TI	TBP28R45	3761-82
28R85	TI	TBP28R85	3763-22
28S165	**TI**	**TBP28S165**	**★4247**
28S166	**TI**	**TBP28S166**	**★4247**
			3764-77
28S2708			
	TI	**TBP28S2708**	**★4248**
			3763-89
28S42	**TI**	**TBP28S42**	**★ 542**
			★4244
			(Continued)

¶ Indicates page number in Application Note Directory.
★ Indicates addition data is provided on the page noted.

Base Number	Source	Device	Page-Line
28S42	TI	TBP28S42	3762-10
		TBP28S42M	★ 542
			★4244
			3762-32
			3762-33
			3762-48
			3762-49
28S45	TI	TBP28S45	3761-91
28S46	TI	TBP28S46	★ 542
			★ 543
			★4245
			3762-15
		TBP28S46M	★ 542
			★ 543
			★4245
			3762-39
28S85	TI	TBP28S85	★4246
			3763-24
28S86	TI	TBP28S86-60	★ 542
			★ 543
			★4246
			3763-63
28SA166			
	TI	TBP28SA166	3764-75
28SA42	TI	TBP28SA42	★4245
			3762-18
		TBP28SA42M	★4245
			3762-45
28SA46	TI	TBP28SA46	★4245
			3762-21
		TBP28SA46M	★4245
			3762-47
28SA86	TI	TBP28SA86-60	★4247
			3763-64
		TBP28SA86A-50	
			★4247
			3764-113
		TBP28SA86M	★4247
			3763-85
29	AMD	AMSYS/29	1809-2
	AMD	AMSYS29/10	★1428
			★1901
			1809-3
	Datal/O	29A Universal Programmer	4353-1
	TeledyneC	CDA29A	2619-53
290	AD	AD290T	2652-34
	National	AM290	2619-29
			2619-31
	SGS	L290	3234-8
	SiliconG	SG290N	3173-39
	Siliconix	DG290A	★3078
			2619-51
		DG290B	★3078
			2619-52
2900	AMD	AM2900	★1401
			¶ 271-16
	National	LM2900	3180-92
	NCR	NCR2900	640-59
	Raytheon	LM2900	3180-94
	TI	LM2900	3180-96
2901	AMD	AM2901AC	★1401
			605-49
		AM2901AM	★1401
			605-50
		AM2901B	★1401
			1257-3
		AM2901BC	★1401
			605-51
	AMD	AM2901BC	1336-47
	AMD	AM2901BM	★1401
			605-52
	AMD	AM2901BM	1336-48
	AMD	AM2901C	★1401
			605-53
	AMD	AM2901C	1257-4
	AMD	AM2901M	★1401
			605-54
	Motorola	LM2901	3163-30
	National	ADM2901AC	605-59
		IDM2901A-2	1336-53
			1257-11
		IDM2901AC	1336-54
		IDM2901AM	605-60
			1336-55
			(Continued)

Base Number	Source	Device	Page-Line
2901	National	LM2901	3163-31
	NEC	uPC2901	3163-32
	Raytheon	2901	1257-12
		LM2901	3163-33
	Signetics	LM2901	3163-34
	TI	LM2901	3163-35
	Thomson-CSF		
		TDF2901	3163-36
	Unitrode	UC2901	★3710
			3235-153
2902	AMD	AM2902AC	1336-101
		AM2902AM	1336-102
	Motorola	LM2902	3180-7
	National	IDM2902C	1336-103
		IDM2902M	1336-104
		LM2902	3180-9
	NEC	uPC2902	3180-48
	Raytheon	LM2902	3180-11
	TI	LM2902	3180-13
	Thomson-CSF		
		TDF2902	3180-44
			3212-55
2903	AMD	AM2903	★1402
			1257-5
		AM2903AC	★1402
			1336-49
		AM2903AM	★1402
			1336-50
		AM2903C	★1402
			605-55
	AMD	AM2903C	1336-51
	AMD	AM2903M	★1402
			605-56
	AMD	AM2903M	1336-52
	Fairchild	uA2903	3161-54
	National	LM2903	3161-55
	Signetics	LM2903	3161-56
	TI	LM2903	3161-57
	Thomson-CSF		
		TDF2903	3161-58
	Unitrode	UC2903	★3710
			3235-154
2904	AMD	AM2904C	★1404
			1336-92
			¶ 271-9
		AM2904M	★1404
			1336-93
			¶ 271-9
	Hitachi	HD2904	2668-23
	Motorola	LM2904	3180-8
	National	LM2904	3180-10
	RCA	CA2904	3180-12
	TI	LM2904	3180-14
	Thomson-CSF		
		TDF2904	3180-15
			3209-8
2905	AMD	AM2905C	★1405
			2676-44
	AMD	AM2905C	1336-56
	AMD	AM2905M	★1405
			2676-37
	AMD	AM2905M	1336-57
	Hitachi	HD2905	2672-25
	National	LM2905	3220-14
	Thomson-CSF		
		TDC2905	3226-48
2906	AMD	AM2906C	★1405
			2676-45
	AMD	AM2906C	1336-58
	AMD	AM2906M	★1405
			2676-38
	AMD	AM2906M	1336-59
2907	AMD	AM2907C	★1406
			2676-42
	AMD	AM2907C	1336-60
	AMD	AM2907M	★1406
			2676-35
	AMD	AM2907M	1336-61
	Cherry	CS2907	3234-4
			3234-156
		MC2907	3173-47
	National	LM2907	3173-135
			3234-6
			¶ 308-12
2908	AMD	AM2908C	★1406
			2676-43
			(Continued)

Base Number	Source	Device	Page-Line
2908	AMD	AM2908M	★1406
			2676-36
2909	AMD	AM2909A	★1407
			637-41
		AM2909AC	★1407
			1336-111
		AM2909C	★1407
			637-42
	AMD	AM2909C	1336-112
	AMD	AM2909M	★1407
			637-43
	National	IDM2909AC	637-48
			1336-114
		IDM2909AM	637-49
			1336-115
291	National	AM291	2619-42
			2619-46
	SGS	L291	3234-9
	Siemens	FZH291	601-120
		S291	3216-104
	SiliconG	SG291N	3173-40
	TI	TL291	★3687
2910	AMD	AM2910C	★1408
			1350-40
			¶ 271-9
		AM2910M	★1408
			1350-41
			¶ 271-9
	Intel	2910	3216-111
		2910A	3216-112
	National	IDM2910A	1354-15
	OEI	2910	3155-125
			3155-130
	TI	TCM2910A	3216-122
2911	AMD	AM2911A	★1407
			637-44
	AMD	AM2911A	1336-113
	AMD	AM2911C	★1407
			637-45
		AM2911M	★1407
			637-46
	Intel	2911A	3216-48
	National	IDM2911AC	637-50
			1336-116
		IDM2911AM	637-51
			1336-117
	TI	TCM2911A	3216-56
29112	AMD	AM29112	★1423
			1350-43
29116	AMD	AM29116	★1424
			1283-28
			¶ 261-15
			¶ 271-9
2912	AMD	AM2912C	★1409
			1336-62
	Hitachi	HD2912	2682-162
	Intel	2912A	3217-90
			¶ 298-14
	TI	TCM2912A	3217-85
		TCM2912B	3217-102
	Thomson-CSF		
		TDC2912	3227-18
2913	AMD	AM2913C	★1409
			639-47
			¶ 271-16
	AMD	AM2913C	1336-132
	AMD	AM2913M	★1409
			639-48
			¶ 271-16
	AMD	AM2913M	1336-133
	Intel	2913	3216-72
			¶ 298-17
	TI	TCM2913	3216-76
2914	AMD	AM2914C	★1410
			1336-130
			1355-38
			¶ 271-9
			¶ 271-16
		AM2914M	★1410
			1336-131
			1355-39
			¶ 271-9
			¶ 271-16
	Intel	2914	3216-73
			¶ 298-17
	TI	TCM2914	3216-77

Base Number	Source	Device	Page-Line
2915	AMD	AM2915AC	★1411
			2675-47
	AMD	AM2915AC	1336-63
	AMD	AM2915AM	★1411
			2675-21
	AMD	AM2915AM	1336-64
	Hitachi	HD2915	2672-24
	Thomson-CSF		
		TDC2915	3227-69
2916	AMD	AM2916AC	★1411
			2675-48
	AMD	AM2916AC	1336-65
	AMD	AM2916AM	★1411
			2675-22
	AMD	AM2916AM	1336-66
	Hitachi	HD2916	2682-163
	OKI	MSM2916	★4118
	TI	TCM2916	3216-78
			3216-95
2917	AMD	AM2917AC	★1412
			2675-49
	AMD	AM2917AC	1336-67
	AMD	AM2917AM	★1412
			2675-23
	AMD	AM2917AM	1336-68
	Cherry	CS2917	3173-46
			3173-134
			3234-5
			3235-1
	National	LM2917	3173-136
			3234-7
			¶ 308-12
	TI	TCM2917	3216-63
			3216-79
2918	AMD	AM2918C	★1413
			615-83
	AMD	AM2918C	1337-11
	AMD	AM2918M	★1413
			615-84
	AMD	AM2918M	1337-12
2919	AMD	AM2919C	★1413
			1337-7
		AM2919M	★1413
			1337-8
	Hitachi	HD2919	2680-130
292	National	LM292	3156-5
			3207-20
	SGS	L292	3234-10
	TI	TL292	★3687
2920	AMD	AM2920C	★1414
			616-28
	AMD	AM2920C	1337-17
	AMD	AM2920M	★1414
			616-29
	AMD	AM2920M	1337-18
	Intel	2920	3238-96
			¶ 258-2
			¶ 258-6
			¶ 258-8
			¶ 261-13
			¶ 308-9
	OEI	2920	3155-126
			3155-131
29203	AMD	AM29203	★1402
			605-57
	AMD	AM29203	1257-6
2921	AMD	AM2921C	★1414
			612-31
	AMD	AM2921C	1337-33
	AMD	AM2921M	★1414
			612-32
	AMD	AM2921M	1337-34
	Intel	2921	3238-97
			¶ 261-13
2922	AMD	AM2922C	★1415
			630-21
	AMD	AM2922C	1337-45
	AMD	AM2922M	★1415
			630-22
	AMD	AM2922M	1337-46
2923	AMD	AM2923C	★1415
			1337-47
	Hitachi	HD2923	2682-166
2924	AMD	AM2924C	★1416
			1336-78
	National	LM2924	3156-2

Arranged alphanumerically from left to right.

Base Number	Source	Device	Page-Line
2925	**AMD**	**AM2925C**	★1416
			1336-75
		AM2925M	★1416
			1336-76
	SiliconG	SG2925	3173-41
2926	**AMD**	**AM2926C**	★1417
			1337-5
2927	**AMD**	**AM2927C**	★1417
			1336-69
2928	**AMD**	**AM2928C**	★1417
			1336-70
2929	**AMD**	**AM2929C**	★1417
			1337-6
293	Fairchild	uA293	3161-42
		uA293A	3160-55
	National	LM293	3161-44
		LM293A	3160-57
	SGS	L293	3234-11
	Signetics	LM293	3161-46
		LM293A	3161-47
	SiliconG	SG293A	2682-75
	TI	LM293	3161-49
2930	National	LM2930-5	3221-26
		LM2930-8	3222-98
	TI	LM2930-5	3221-19
		LM2930-8	3222-97
29301	TI	SN29301	612-88
29308	TI	SN29308	625-66
29309	TI	SN29309	627-137
2931	Motorola	LM2931-5	3221-7
	National	LM2931	3228-32
		LM2931-5	3221-93
29310	TI	SN29310	610-36
29311	TI	SN29311	613-120
29312	TI	SN29312	629-136
29316	TI	SN29316	608-4
29318	TI	SN29318	639-38
2932	**OKI**	**MSM2932**	★4118
2935	**National**	**LM2935**	★3540
			3221-55
			3228-1
	Sprague	UDN-2935Z	3234-143
294	**TI**	**TL294**	★3687
2940	**AMD**	**AM2940C**	★1418
			1336-79
		AM2940M	★1418
			1336-80
2942	**AMD**	**AM2942C**	★1419
			1336-81
		AM2942M	★1419
			1336-82
2946	**AMD**	**AM2946C**	★1420
			1336-71
2947	**AMD**	**AM2947C**	★1420
			1336-72
2948	**AMD**	**AM2948C**	★1420
			1336-73
2949	**AMD**	**AM2949C**	★1420
			1336-74
	Sprague	UDN-2949Z	3173-71
			3235-18
			¶ 288-13
295	National	LM295	3232-94
	Panasonic	AN295	3171-67
	Siemens	FZH295B	601-121
2950	**AMD**	**AM2950C**	★1421
			1337-41
		AM2950M	★1421
			1337-42
	Sprague	UDN-2950Z	3234-144
29501	**AMD**	**AM29501**	★702
			637-77
29509	AMD	AM29509	605-31
			1336-118
2951	**AMD**	**AM2951C**	★1421
			1337-43
		AM2951M	★1421
			1337-44
29510	AMD	AM29510	605-36
			1336-120
29516	**AMD**	**AM29516**	★701
			604-148
29517	**AMD**	**AM29517**	★701
			604-149
2952	AMD	AM2952C	1337-36
		AM2952M	1337-37
			(Continued)

Base Number	Source	Device	Page-Line
2952	**Sprague**	**UDN-2952**	★3089
			3234-139
29520	**AMD**	**AM29520**	★702
			637-57
29521	**AMD**	**AM29521**	★702
			637-58
2953	AMD	AM2953C	1337-38
		AM2953M	1337-39
2954	**AMD**	**AM2954C**	★1422
			1337-31
29540	**AMD**	**AM29540**	★703
			637-76
2955	**AMD**	**AM2955C**	★1422
			1337-32
2956	**AMD**	**AM2956C**	★1422
			1337-21
	Sprague	UDN-2956A	2679-66
			¶ 291-12
			3157-181
			3218-56
		UDQ-2956R	2680-64
2957	**AMD**	**AM2957C**	★1422
			1337-22
	Sprague	UDN-2957A	2679-67
			3157-182
			3218-57
		UDQ-2957	2680-65
2958	**AMD**	**AM2958C**	★1423
			1337-15
2959	**AMD**	**AM2959C**	★1423
			1337-16
2960	AMD	AM2960C	1336-87
		AM2960M	1336-88
29601	TI	SN29601	630-117
2961	AMD	AM2961C	1336-94
		AM2961M	1336-95
29610	**Raytheon**	**29610**	★4130
29611	**Raytheon**	**29611**	★4131
			3761-49
			3761-48
			3761-68
			3761-69
		29611A	★4131
			3761-30
29613	**Raytheon**	**29613A**	★4131
			3760-83
			3760-84
			3760-104
			3760-105
		29613C	★4131
			3761-56
		29613M	★4131
			3761-75
2962	AMD	AM2962C	1336-96
29620	**Raytheon**	**29620**	★4130
29621	**Raytheon**	**29621**	★4131
29623	**Raytheon**	**29623**	★4131
			3762-31
29630	**Raytheon**	**29630**	★4130
29631	**Raytheon**	**29631A**	★4131
			3763-68
			3763-69
29633	**Raytheon**	**29633A**	★4131
			3763-70
			3763-71
			3763-80
			3763-81
		29633C	★4131
			3763-105
2964	AMD	AM2964B	1336-83
	OKI	**MSM2964**	★4118
2965	AMD	AM2965C	2683-98
			1337-23
		AM2965M	2683-99
			1337-24
29650	**Raytheon**	**29650**	★4130
29651	**Raytheon**	**29651A**	★4131
			3764-44
		29651C	★4131
			3764-57
		29651M	★4131
			3764-62
29653	**Raytheon**	**29653A**	★4131
			3764-45
		29653C	★4131
			3764-58
			(Continued)

Base Number	Source	Device	Page-Line
29653	**Raytheon**	**29653M**	★4131
			3764-63
2966	AMD	AM2966C	2683-100
			1337-25
		AM2966M	2683-101
			1337-26
29670	**Raytheon**	**29670**	★4130
29671	**Raytheon**	**29671**	★4131
			3766-15
			3766-16
			3766-23
			3766-24
		29671A	★4131
			3766-13
			3766-14
			3766-17
			3766-18
29673	**Raytheon**	**29673**	★4131
			3766-21
			3766-22
			3766-25
			3766-26
2968	AMD	AM2968	2680-97
			1336-84
29681	**Raytheon**	**29681**	★4131
			3765-39
		29681A	★4131
			3765-1
			3765-2
			3765-29
			3765-30
29683	**Raytheon**	**29683**	★4131
			3765-41
		29683A	★4131
			3765-3
			3765-4
			3765-31
			3765-32
2969	AMD	AM2969	2680-87
			1336-105
29693	Raytheon	29693C	4483-21
		29693M	4483-22
2970	AMD	AM2970	2680-89
			1336-108
	National	IDM2970C	3771-6
29704	AMD	AM29704C	627-54
		AM29704M	627-55
	National	IDM29704C	627-63
		IDM29704M	627-64
			3771-15
29705	**AMD**	**AM29705C**	★1425
			627-65
	AMD	AM29705C	3771-7
			1336-136
	AMD	**AM29705M**	★1425
			627-66
	AMD	AM29705M	3771-18
			1336-137
	National	F29705M	3771-8
		IDM29705	3771-9
		IDM29705AC	627-76
			1337-1
		IDM29705AM	627-77
			1337-2
		IDM29705C	627-78
			3770-128
		IDM29705M	627-79
29707	**AMD**	**AM29707**	★1425
			1336-138
29720	AMD	AM29720C	3772-25
		AM29720M	3772-36
29721	AMD	AM29721C	3772-29
		AM29721M	3772-39
2975	Sprague	UDN-2975W	2682-71
2976	Sprague	UDN-2976W	2682-72
29760	AMD	AM29760AM	3760-101
298	AMD	LF298	3237-159
	Burr-Brown	**SHC298AM**	★2849
			3237-182
	Fairchild	uA298	3238-11
	National	LF298	3238-41
		LF298A	3238-42
	Signetics	LF298	3238-67
29800	**AMD**	**AM29800Series**	★2801
29803	**AMD**	**AM29803AC**	★1426
			1337-49
			(Continued)

Base Number	Source	Device	Page-Line
29803	**AMD**	**AM29803AM**	★1426
			1337-50
	National	IDM29803C	1337-51
		IDM29803M	1337-52
29806	AMD	AM29806	1337-35
29809	AMD	AM29809	1337-48
2981	Sprague	UDN-2981A	2680-27
			3158-103
		UDS-2981H	2680-29
			3158-107
29811	**AMD**	**AM29811AC**	★1426
			1336-124
		AM29811AM	★1426
			1336-125
	National	IDM29811C	1336-126
		IDM29811M	1336-127
29818	AMD	AM29818	1337-40
2982	Sprague	UDN-2982A	2680-8
			3158-104
		UDS-2982H	2680-10
			3158-108
29821	**AMD**	**AM29821**	★2802
			633-32
29822	**AMD**	**AM29822**	★2802
			633-33
29823	**AMD**	**AM29823**	★2802
			633-25
29824	**AMD**	**AM29824**	★2802
			633-26
29825	**AMD**	**AM29825**	★2802
			632-73
29826	**AMD**	**AM29826**	★2802
			632-74
29827	**AMD**	**AM29827**	★2804
			606-115
29828	**AMD**	**AM29828**	★2804
			606-116
2983	Sprague	UDN-2983A	2680-28
			3158-105
		UDS-2983H	2680-30
			3158-109
29833	**AMD**	**AM29833**	★2806
			636-94
29834	**AMD**	**AM29834**	★2806
			636-95
2984	Sprague	UDN-2984A	2680-9
			3158-106
		UDS-2984H	2680-11
			3158-110
29841	**AMD**	**AM29841**	★2807
			626-154
29842	**AMD**	**AM29842**	★2807
			626-155
29843	**AMD**	**AM29843**	★2807
			626-148
29844	**AMD**	**AM29844**	★2807
			626-149
29845	**AMD**	**AM29845**	★2807
			626-140
29846	**AMD**	**AM29846**	★2807
			626-141
29853	AMD	AM29853	636-96
29854	AMD	AM29854	636-97
29861	**AMD**	**AM29861**	★2804
			636-104
29862	**AMD**	**AM29862**	★2804
			636-105
29863	**AMD**	**AM29863**	★2804
			636-103
29864	**AMD**	**AM29864**	★2804
			636-102
299	National	LM299	3237-15
			¶ 315-6
		LM299A	3237-16
			¶ 315-6
			¶ 315-6
29901	National	IDM29901C	1337-19
		IDM29901M	1337-20
29902	National	IDM29902C	1336-128
		IDM29902M	1336-129
29903	National	IDM29903C	1337-53
29908	National	IDM29908C	1337-13
		IDM29908M	1337-14
29L509	AMD	AM29L509	605-32
			1336-119

¶ Indicates page number in Application Note Directory.
★ Indicates addition data is provided on the page noted.

Base Number	Source	Device	Page-Line
29L510	AMD	AM29L510	605-37
			1336-121
29L516	AMD	AM29L516	604-150
			1336-122
29L517	AMD	AM29L517	604-151
			1336-123
29LS18	**AMD**	**AM29LS18**	★ **1413**
			615-87
20V12	Lambda	L20V12	3235-96
20V15	Lambda	L20V15	3235-97
20V18	Lambda	L20V18	3235-98
20V20	Lambda	L20V20	3235-99
20V24	Lambda	L20V24	3235-100
20V5	Lambda	L20V5	3235-101
20V6	Lambda	L20V6	3235-102
20V9	Lambda	L20V9	3235-103
3	**AMI**	**UA-3**	★ **4619**
			4468-7
	DataGen	MBC/3	1965-23
	Datel	**ADC-HU3B**	★ **2862**
			2625-1
		VFQ-3	★ **2865**
			3239-29
		VFQ-3C	★ **2865**
			3233-114
	Ferranti	ULA3U	4474-5
		ZNPCM3	3216-69
	GI	LAD3	4466-39
	Mostek	MDX-CPU3	1957-6
	Octagon	SYS-3A	1965-5
	Siliconix	ISO-3	
		Library	4478-22
	Supertex	SD3A	3173-98
30	Ferranti	ULA30RA	4465-30
		ULA30RB	4468-42
			4469-11
		ULA30RC	4470-29
			4471-1
		ULA30RD	4471-45
			4472-9
	Interdesign	ULA30RA	4465-31
		ULA30RB	4468-43
			4469-12
		ULA30RC	4470-30
			4471-2
		ULA30RD	4471-46
			4472-10
	MicroTech	SGA30	4462-11
	TeledyneC	CAG30	2615-20
300	Cybernetic	CY300	2663-19
			1354-5
	Dionics	DI300	2663-122
	Exar	**XR300**	★ **3386**
			4471-29
	Harris	**HI300**	★ **2872**
			2615-30
	Intersil	LM300	3228-29
	ITT	SAJ300	3166-128
	LSIComp	**RED300/360**	★ **803**
			589-173
			641-41
	Mostek	MKA300	4467-4
	Motorola	**MVME300**	★ **2041**
	SiliconG	SG300	3228-30
	Siliconix	**DG300A**	★ **3077**
			2615-33
			¶ 291-2
		DG300AA	★ **3077**
			2615-34
			¶ 291-2
		DG300AB	★ **3077**
			2615-35
			¶ 291-2
		DG300AC	★ **3077**
			2615-36
			¶ 291-2
		DG300B	★ **3077**
			2615-37
			¶ 291-2
		DG300C	★ **3077**
			2615-38
			¶ 291-2
	Varix	SP0300-X	4357-9
3000	~~AMI~~	~~CA3000B~~	~~★ 4619~~
			4462-3
	CalDevices	CDI3000	4470-8
			(Continued)

Base Number	Source	Device	Page-Line
3000	Cherry	CS3000F	4473-20
	Curtis	PM3000S	4351-6
	Hughes	H3000	4353-11
	LSIComp	**RED3000/3600**	★ **803**
			589-174
			641-47
	MicroNet	**MN3000**	★ **3044**
			2642-7
		MN3000H	★ **3044**
			2642-8
	Motorola	MC3000	621-183
	Plessey	**CLA3000**	★ **4819**
			4466-29
	RCA	CA3000	3155-37
			¶ 292-8
	RCA	**CA3000SERIES**	★ **542**
			¶ 292-8
	Siemens	TDA3000	3165-62
3001	Intel	M3001	637-47
	MicroNet	**MN3001**	★ **3044**
			2642-9
		MN3001H	★ **3044**
			2642-10
	Motorola	MC3001	619-115
	Panasonic	**MN3001**	★ **3559**
			3165-181
			3232-40
	RCA	CA3001	3156-105
			¶ 297-11
	Signetics	**N3001**	★ **1663**
			637-52
			¶ 271-8
			¶ 271-14
	Signetics	N3001	1336-45
			¶ 271-8
			¶ 271-14
			1257-1
			¶ 271-8
			¶ 271-14
	~~Signetics~~	~~S3001~~	~~★ 1663~~
			637-54
	Signetics	S3001	1336-46
	SiliconG	SG3001	3156-119
	Siliconix	**VQ3001**	★ **3085**
			2683-25
3002	Intel	3002	605-58
	MicroNet	**MN3002**	★ **3044**
			2642-11
		MN3002H	★ **3044**
			2642-12
	Motorola	MC3002	624-116
	Panasonic	**MN3002**	★ **3559**
			3232-52
	RCA	CA3002	3168-41
			¶ 297-3
	Signetics	**N3002**	★ **1665**
			605-61
			¶ 270-11
			¶ 271-8
			¶ 271-14
	Signetics	N3002	1336-43
			¶ 270-11
			¶ 271-8
			¶ 271-14
			1257-2
			¶ 270-11
			¶ 271-8
			¶ 271-14
	Signetics	**S3002**	★ **1665**
			605-62
	Signetics	S3002	1336-44
	Signetics	**SN3002**	★ **1665**
	Siliconix	**SI3002**	★ **3078**
3003	**MicroNet**	**MN3003**	★ **3044**
			2645-8
		MN3003H	★ **3044**
			2645-9
	Motorola	MC3003	623-104
	Panasonic	**MN3003**	★ **3559**
			3232-42
3004	Hughes	HNVM3004	3758-45
	MicroNet	**MN3004**	★ **3044**
			2645-10
		~~MN3004H~~	~~★ 3044~~
			2645-11
	Panasonic	**MN3004**	★ **3559**
			(Continued)

Base Number	Source	Device	Page-Line
3004	**Panasonic**	**MN3004**	**3232-53**
	Signetics	SAA3004	3168-179
3005	**MicroNet**	**MN3005**	★ **3044**
			2645-12
		MN3005H	★ **3044**
			2645-13
	Panasonic	**MN3005**	★ **3559**
			3232-51
	RCA	**CA3005**	★ **3603**
			3168-42
			3169-1
			¶ 297-4
			¶ 301-9
3006	**MicroNet**	**MN3006**	★ **3044**
			2642-13
		MN3006H	★ **3044**
			2642-14
	Panasonic	MN3006	3232-46
	RCA	**CA3006**	★ **3603**
			3168-43
			3169-2
			¶ 297-4
	Signetics	SAA3006	3169-6
3007	**MicroNet**	**MN3007**	★ **3044**
			2645-14
		MN3007H	★ **3044**
			2645-15
	Panasonic	**MN3007**	★ **3559**
			3232-43
3008	Hughes	HNVM3008	3758-47
	MicroNet	**MN3008**	★ **3044**
			2641-36
			¶ 285-1
		MN3008H	★ **3044**
			2641-37
			¶ 285-1
	Panasonic	**MN3008**	★ **3559**
			3232-47
	RIFA	PBA3008	3220-2
3009	~~MicroNet~~	~~MN3009~~	~~★ 3044~~
			2641-38
		MN3009H	★ **3044**
			2641-39
	Panasonic	**MN3009**	★ **3559**
			3232-48
	RIFA	PBA3009	3220-3
301	**AD**	**AD301A**	★ **3351**
			3199-47
		AD301AL	★ **3351**
			3186-65
	Fairchild	uA301A	3199-48
	Harris	**HI301**	★ **2872**
			2617-111
	Intersil	ICL301ALN	3199-38
	LinearTech	LM301A	3199-49
	MicroPwr	MP301	3157-60
	Motorola	LM301A	3199-50
	National	LM301A	3199-51
	NEC	uPC301	3199-53
	Panasonic	AN301	3170-20
	Raytheon	LM301A	3196-36
	RCA	CA301A	3199-54
		GP301AD	1337-90
	Siemens	FZH301	601-124
		SM301A	3219-2
	SiliconG	SG301A	3199-55
	Siliconix	**DG301AA**	★ **3078**
			2617-114
			¶ 291-2
		DG301AB	★ **3078**
			2617-115
			¶ 291-2
		DG301AC	★ **3078**
			2617-116
			¶ 291-2
	TeledyneC	CSR301	2661-40
			2681-2
	TeledyneS	301A/C	601-44
		301B/M	601-45
	TI	LM301A	3199-56
3010	Intech	3010	3232-35
	Panasonic	**MN3010**	★ **3559**
			3165-182
			3232-41
	RCA	CA3010	3197-35
			¶ 293-9
			(Continued)

Base Number	Source	Device	Page-Line
3010	RCA	CA3010A	3191-56
			¶ 293-9
	Sharp	LI3010	1338-131
3011	National	LM3011	3168-61
	Panasonic	**MN3011**	★ **3559**
			3232-49
	RCA	CA3011	3156-106
			¶ 301-9
3012	**Panasonic**	**MN3012**	★ **3559**
			3232-50
	RCA	CA3012	3168-44
			¶ 301-9
3013	**MicroNet**	**MN3013**	★ **3044**
			2642-15
		MN3013H	★ **3044**
			2642-16
	RCA	CA3013	3168-70
			¶ 301-9
	Signetics	SAB3013	3171-43
	Sprague	UGN-3013T	641-75
			3234-17
3014	**MicroNet**	**MN3014**	★ **3044**
			2641-47
		MN3014H	★ **3044**
			2641-48
	RCA	CA3014	3168-71
			¶ 301-9
3015	RCA	CA3015	3180-112
			3197-44
			¶ 293-10
		CA3015A	3180-113
			3191-59
			¶ 293-10
30150	RCA	MA30150	4469-42
3016	IMS	IM3016 Multi-Master Programmer	4355-1
3018	**RCA**	**CA3018**	★ **3601**
			3157-1
			¶ 297-14
		CA3018A	★ **3601**
			3157-2
			¶ 297-14
3019	**RCA**	**CA3019**	★ **3601**
			3158-146
			¶ 298-1
	Signetics	SAF3019	3166-154
	Sprague	UGN-3019	641-76
			3234-18
		UGS-3019	641-84
			3234-25
302	Dionics	DI302	2663-123
	Harris	**HI302**	★ **2872**
			2619-112
	Intersil	LM302	3174-37
	MicroPwr	MP302	3157-61
	National	LM302	3174-39
	Panasonic	AN302	3170-16
	RCA	GP302AD	1337-91
	SiliconG	SG302	3174-38
	Siliconix	**DG302A**	★ **3079**
			2619-115
			¶ 291-2
		DG302AA	★ **3079**
			2619-116
			¶ 291-2
		DG302AB	★ **3079**
			2619-117
			¶ 291-2
		DG302AC	★ **3079**
			2619-118
			¶ 291-2
		DG302B	★ **3079**
			2619-119
			¶ 291-2
		DG302C	★ **3079**
			2619-120
			¶ 291-2
	TeledyneS	302A/C	601-39
			¶ 255-11
		302B/M	601-40
			¶ 255-11
3020	HybridSys	HS3020B	2641-49
		HS3020C	2641-50
	HyComp	HC3020	3155-87
			3187-15
			(Continued)

Arranged alphanumerically from left to right.

Base Number	Source	Device	Page-Line
3020	Intech	3020	3232-36
	LSILogic	**LL3020**	★4762
			4467-45
	MicroNet	**MN3020**	★3044
			2641-51
		MN3020H	★3044
			2641-52
	National	TP3020	3216-116
	RCA	CA3020	3164-99
		CA3020A	3156-107
	Sprague	UGN-3020	641-77
		UGS-3020	641-85
3021	Motorola	MC3021	625-21
	National	TP3021	3216-50
	RCA	CA3021	3156-108
			¶ 297-5
3022	Motorola	MC3022	625-49
	RCA	CA3022	3156-109
			¶ 297-5
3023	RCA	CA3023	3156-110
			¶ 297-5
3025	Motorola	MC3025	619-166
30250	RCA	MA30250	4469-43
3026	Motorola	MC3026	618-115
	RCA	CA3026	3157-40
3027	Signetics	SAA3027	3168-180
3028	**RCA**	**CA3028**	★3603
			3168-45
		CA3028A	★3603
			3155-32
			¶ 297-6
		CA3028B	★3603
			3155-33
			¶ 297-6
3029	RCA	CA3029	3197-36
		CA3029A	3191-57
303	**Harris**	**HI303**	★2872
			2618-101
	MicroPwr	MP303	3157-62
	Panasonic	AN303	3170-17
	Siliconix	**DG303AA**	★3078
			2618-104
			¶ 291-2
		DG303AB	★3078
			2618-105
			¶ 291-2
		DG303AC	★3078
			2618-106
			¶ 291-2
	TeledyneS	303A/C	601-102
		303B/M	601-103
3030	Intech	3030	3232-34
	LSILogic	**LL3030**	★4762
			4467-46
	RCA	CA3030	3180-114
			3197-45
		CA3030A	3180-115
			3191-60
	Sprague	UGN-3030	641-78
			3234-19
		UGS-3030	641-86
			3234-26
3035	Signetics	SAB3035	3171-49
			3171-60
3036	Signetics	SAB3036	3171-50
3037	RCA	CA3037	3197-37
		CA3037A	3191-58
	Signetics	SAB3037	3171-51
3038	RCA	CA3038	3180-116
			3197-46
		CA3038A	3180-117
			3191-61
3039	**RCA**	**CA3039**	★3601
304	**Harris**	**HI304**	★2872
			2615-31
	National	LM304	3229-73
	Panasonic	AN304	3170-10
	SiliconG	SG304	3229-75
			3229-115
	Siliconix	**DG304A**	★3077
			2615-39
			¶ 291-2
		DG304AA	★3077
			2615-40
			¶ 291-2
		DG304AB	★3077
			(Continued)

Base Number	Source	Device	Page-Line
304	**Siliconix**	**DG304AB**	2615-41
			¶ 291-2
		DG304AC	★3077
			2615-42
			¶ 291-2
		DG304B	★3077
			2615-43
			¶ 291-2
		DG304C	★3077
			2615-44
			¶ 291-2
	TeledyneS	304A/C	601-112
		304B/M	601-113
3040	Aptek	AMS3040A	3216-12
	Intech	3040	3239-18
	LSILogic	**LL3040**	★4762
			4467-47
	MicroNet	**MN3040**	★3044
			2644-50
		MN3040H	★3044
			2644-51
	National	TP3040	3217-97
		TP3040A	3217-98
	RCA	CA3040	3156-111
	Sprague	UGN-3040T	641-79
			3234-20
3041	Aptek	AMS3041A	3216-13
	Intech	3041	3239-17
3042	RCA	CA3042	3168-72
			3171-176
			¶ 304-1
	Sanyo	STK3042	3164-75
3043	Telefunken	U3043M	3155-9
			¶ 306-18
3044	Aptek	AMS3044	3216-14
3045	Aptek	AMS3045	3216-15
	National	LM3045	3157-8
	Plessey	SL3045	3157-12
	RCA	**CA3045**	★3601
			3157-15
	SiliconG	SG3045	3157-25
3046	National	LM3046	3157-9
	Plessey	SL3046	3157-13
	RCA	**CA3046**	★3601
			3157-16
	SiliconG	SG3046	3157-26
3047	Signetics	TDA3047	3156-22
			3168-177
3048	**RCA**	**CA3048**	★3601
			3155-1
			3232-1
			¶ 293-15
	Signetics	TDA3048	3168-178
3049	**RCA**	**CA3049**	★3601
			3157-44
			3169-3
304D2	FujitsuA	FBC304D2A	3768-13
	FujitsuA	**FBM304D2A**	★3938
304M1	FujitsuA	FBC304M1A	3768-12
	FujitsuA	**FBM304M1A**	★3938
305	Fairchild	uA305AC	3229-46
		uA305C	3228-47
	Harris	**HI305**	★2872
			2617-112
	Intersil	LM305	3228-48
	National	LM305	3228-49
		LM305A	3229-47
	NEC	uPC305	3228-51
	Panasonic	AN305	3170-5
	Siemens	FZH305	601-125
	SiliconG	SG305	3228-53
		SG305A	3229-48
	Siliconix	**DG305AA**	★3078
			2617-117
			¶ 291-2
		DG305AB	★3078
			2617-118
			¶ 291-2
		DG305AC	★3078
			2617-119
			¶ 291-2
3050	Intech	3050	3232-2
	RCA	CA3050	3157-46
	Telmos	TM3050	4468-46
3051	National	TP3051	3216-70
	RCA	CA3051	3157-47

Base Number	Source	Device	Page-Line
3052	National	TP3052	3216-84
	RCA	**CA3052**	★3601
			3155-2
3053	National	TP3053	3216-85
	RCA	**CA3053**	★3603
			3155-34
3054	Motorola	CA3054	3157-39
	National	TP3054	3216-86
	RCA	CA3054	3157-41
3056	National	TP3056	3216-71
3057	National	TP3057	3216-87
3058	**RCA**	**CA3058**	★3603
			3239-99
			¶ 291-7
3059	Motorola	CA3059	3239-91
	RCA	**CA3059**	★3603
			3239-100
			¶ 291-7
	SiliconG	SG3059	3239-106
306	**Harris**	**HI306**	★2872
			2619-113
	National	LM306	3160-4
	Siliconix	**DG306AA**	★3079
			2619-121
			¶ 291-2
		DG306AB	★3079
			2619-122
			¶ 291-2
		DG306AC	★3079
			2619-123
			¶ 291-2
	TeledyneS	306A/C	601-128
	TI	LM306	3160-10
3060	**LSILogic**	**LL3060**	★4762
			4467-48
	Motorola	MC3060	615-5
	RCA	**CA3060**	★3597
			3210-3
		CA3060A	★3597
			3208-23
		CA3060B	★3597
			3208-24
3061	Motorola	MC3061	617-121
3062	Motorola	MC3062	617-122
	Sanyo	STK3062	3164-76
3064	Aptek	AMS3064	3217-77
	National	LM3064	3170-36
	RCA	CA3064	3170-38
3065	Aptek	AMS3065	3217-78
	RCA	CA3065	3168-73
			3171-177
30650	**RCA**	**PA30650**	★4824
			4467-25
3067	RCA	CA3067	3170-146
3068	RCA	CA3068	3172-137
			¶ 303-4
3069	Intech	A3069	3233-59
307	**Harris**	**HI307**	★2872
			2618-102
	Intersil	LM307	3199-39
	LinearTech	LM307	3199-40
	Motorola	LM307	3199-41
	National	LM307	3199-42
	Raytheon	LM307	3196-35
	RCA	CA307	3199-43
	SiliconG	SG307	3199-44
	Siliconix	**DG307AA**	★3078
			2618-107
			¶ 291-2
		DG307AB	★3078
			2618-108
			¶ 291-2
		DG307AC	★3078
			2618-109
			¶ 291-2
	TeledyneS	307A/C	601-123
	TI	LM307	3199-45
3070	RCA	CA3070	3170-147
3071	RCA	CA3071	3170-148
3072	RCA	CA3072	3170-149
3075	National	LM3075	3168-62
	RCA	CA3075	3168-74
			3171-178
	Sprague	UGN-3075	2680-57
		UGS-3075	2680-59

Base Number	Source	Device	Page-Line
3076	RCA	CA3076	3168-46
	Sprague	UGN-3076	2680-58
		UGS-3076	2680-60
3078	**Raytheon**	**RC3078**	★3592
			3194-11
		RC3078A	★3592
			3193-32
	RCA	**CA3078**	★3597
			3194-12
		CA3078A	★3597
			3190-55
3079	Motorola	CA3079	3239-92
	RCA	**CA3079**	★3603
			3239-101
			¶ 291-7
	SiliconG	SG3079	3239-107
308	AMD	LM308	3199-28
		LM308A	3186-48
	AD	**AD308**	★3351
			3199-29
		AD308A	★3351
			3186-49
	Fairchild	uA308AC	3186-50
	Harris	LM308	3199-30
		LM308A	3186-51
	Intersil	LM308	3199-31
		LM308A	3186-52
		LM308LN	3199-25
	LinearTech	LM308	3199-32
		LM308A	3186-53
	MicroPwr	**MPLM308**	★3529
	Motorola	LM308	3199-33
		LM308A	3186-54
	National	LM308	3199-34
		LM308A	3186-55
	PMI	PM-308	3199-35
		PM-308A	3186-56
	SiliconG	SG308	3199-36
		SG308A	3186-57
	Siliconix	**DG308A**	★3077
			2617-6
			¶ 291-17
			¶ 292-1
		DG308C	★3077
			2617-7
			¶ 291-17
			¶ 292-1
3080	**LSILogic**	**LL3080**	★4762
			4467-49
	National	LM3080	3165-121
		LM3080A	3165-122
	RCA	**CA3080**	★3598
			3165-149
			3167-60
			3194-25
		CA3080A	★3598
			3165-150
			3167-61
			3194-26
			¶ 293-13
	Telefunken	U3080M	2661-70
3081	Aptek	AMS3081	3218-78
	RCA	**CA3081**	★3601
			3158-96
	Signetics	CA3081	3158-97
	SiliconG	SG3081	3158-98
3082	Aptek	AMS3082	3218-79
	RCA	**CA3082**	★3601
			3158-92
	Sanyo	STK3082	3164-77
	SiliconG	SG3082	3158-93
3083	RCA	CA3083	3157-167
	Signetics	TDA3083	3157-169
	SiliconG	SG3083	3157-170
	Telefunken	U3083M	3155-10
3084	Aptek	AMS3084	3218-80
	RCA	CA3084	3157-137
3085	Aptek	AMS3085	3218-81
	RCA	**CA3085**	★3602
			3228-33
			¶ 313-8
		CA3085A	★3602
			3228-90
			¶ 313-8
		CA3085B	★3602
			(Continued)

¶ Indicates page number in Application Note Directory.
★ Indicates addition data is provided on the page noted.

Base Number	Source	Device	Page-Line
3085	**RCA**	**CA3085B**	**3229-50**
			¶ 313-8
3086	Fairchild	uA3086M	3157-5
	National	LM3086	3157-10
	RCA	**CA3086**	**★3601**
			3157-17
	SiliconG	SG3086	3157-27
3088	RCA	CA3088	3167-111
3089	National	LM3089	3168-63
	RCA	CA3089	3168-75
			¶ 300-16
	Signetics	CA3089	3168-87
3089D2	Signetics	CA3089D2	3168-88
309	Fairchild	uA309C	3221-59
	Motorola	**LM309H**	**★3531**
			3221-23
		LM309K	**★3531**
			3221-62
	National	LM309H	3221-27
		LM309K	3221-65
	SiliconG	SG309K	3221-71
		SG309T	3221-31
	Siliconix	**DG309A**	**★3077**
			2617-8
		DG309C	**★3077**
			2617-9
3091	**RCA**	**CA3091**	**★3604**
			3235-41
3093	**RCA**	**CA3093**	**★3601**
3094	**RCA**	**CA3094**	**★3598**
			3164-135
			3175-107
			¶ 293-5
			¶ 311-6
		CA3094A	**★3598**
			3197-18
			¶ 293-5
			¶ 311-6
		CA3094B	**★3598**
			3197-19
			¶ 293-5
			¶ 311-6
3096	**RCA**	**CA3096**	**★3601**
			3157-140
		CA3096A	**★3601**
			3157-141
		CA3096C	**★3601**
			3157-142
3097	**RCA**	**CA3097**	**★3601**
			3158-151
3098	**RCA**	**CA3098**	**★3599**
			641-114
	RCA	CA3098	3232-103
3099	**RCA**	**CA3099**	**★3599**
			641-115
	RCA	CA3099	3232-104
31	**Burr-Brown**	**UAF31**	**★2852**
			3232-14
	FujitsuA	**FBM31DB**	**★3940**
			3768-7
	Zilog	Model 31	1819-3
310	HyComp	HCS310	2619-84
	Intersil	LM310	3174-29
	Intronics	C310	3232-110
	MicroPwr	MP310	3157-63
	Motorola	**MVME310**	**★2041**
	National	**COP310C**	**★1526**
			1338-58
		COP310L	**★1526**
			1338-59
	National	LM310	3174-30
	SiliconG	SG310	3174-26
3100	CalDevices	HCS3100	4463-14
	Holt	**HI3100**	**★4745**
			4468-3
	LSILogic	**LC3100**	**★4762**
			4468-18
	Motorola	MC3100	621-184
	RCA	**CA3100**	**★3596**
			3197-29
	Signetics	**SMVME3100**	**★2052**
	Telmos	TM3100	4468-47
3101	AMD	AM3101	3771-20
		AM3101-1C	3770-96
		AM3101-1M	3770-118
		AM3101AC	3770-97
			(Continued)

Base Number	Source	Device	Page-Line
3101	AMD	AM3101AM	3770-119
	Motorola	MC3101	619-116
	Panasonic	MN3101	3232-55
	Signetics	N3101A	3770-104
		S3101A	3770-126
	TI	TCM3101	3217-130
3102	Motorola	MC3102	624-117
	RCA	**CA3102**	**★3601**
			3157-45
3105	RCA	CA3105	3196-5
		CA3105M	3196-6
3108	Hughes	HNVM3108	3758-48
311	AMD	LF311	3160-43
		LM311	3160-40
	AD	AD311	3160-25
	Fairchild	uA311C	3160-26
	Intersil	LM311	3160-27
	Intronics	C311	3232-111
	MicroPwr	MP311	3157-64
	Motorola	LM311	3160-28
	National	COP311C	1338-60
		COP311L	1338-61
		LF311	3160-42
		LM311	3160-29
	NEC	uPC311	3160-31
	Raytheon	LM311	3160-32
	RCA	**CA311**	**★3598**
			3160-33
	Siemens	TCA311	3176-31
			3203-2
	Signetics	LM311	3160-34
	SiliconG	SG311	3160-35
	TeledyneS	311A/C	601-52
			¶ 255-11
		311B/M	601-53
			¶ 255-11
	TI	LM311	3160-39
		TL311	3160-44
			¶ 295-6
		TL311A	3160-41
			¶ 295-6
		TL311M	3160-36
			¶ 295-6
3110	**LSILogic**	**LL3110**	**★4762**
			4467-50
	National	TP3110	3217-57
	Sanyo	LA3110	3165-133
3114	AMD	TMS3114	3791-85
3115	Sanyo	LA3115	3165-165
3118	**RCA**	**CA3118**	**★3601**
			3157-3
		CA3118A	**★3601**
			3157-4
312	Intronics	C312	3232-112
	MicroPwr	MP312	3157-65
	Motorola	LM312	3199-26
	National	LM312	3199-27
	PMI	**DAC-312B**	**★3567**
			2655-23
		DAC-312F	**★3567**
			2655-24
	Siemens	TCA312	3176-32
			3201-57
	TeledyneS	312A/C	601-59
			¶ 255-11
		312B/M	601-60
			¶ 255-11
3120	HybridSys	DAC3120B-0	2655-45
		DAC3120C-0	2655-46
		HS3120B-2	2651-41
		HS3120C-2	2651-42
	National	TP3120	3217-58
	RCA	CA3120	3171-140
	Sanyo	LA3120	3165-134
3121	Motorola	MC3121	625-22
	RCA	CA3121	3170-150
3122	Motorola	MC3122	625-50
	Sanyo	LA3122	3165-166
3123	RCA	CA3123	3167-112
3125	RCA	CA3125	3170-151
3126	Motorola	MC3126	618-116
	National	LM3126	3170-123
	RCA	CA3126	3170-152
3127	Plessey	SL3127	3157-175
	RCA	**CA3127**	**★3601**
			(Continued)

Base Number	Source	Device	Page-Line
3127	**RCA**	**CA3127**	**3157-176**
			3168-122
3128	RCA	CA3128	3170-153
313	MicroPwr	MP313	3157-66
	National	LM313	3236-53
	TeledyneS	313A/C	601-61
		313B/M	601-62
3130	**LSILogic**	**LL3130**	**★4762**
			4467-51
	RCA	**CA3130**	**★3596**
			3202-8
			¶ 296-6
		CA3130A	**★3596**
			3194-31
			¶ 296-6
			¶ 296-6
	Sanyo	LA3130	3165-135
3131	RCA	CA3131	3164-154
3132	RCA	CA3132	3164-155
	TI	TMS3132	1339-45
			1265-22
3133	Sanyo	LA3133	3165-167
3134	RCA	CA3134	3171-179
			¶ 303-10
3135	RCA	CA3135	3170-154
3136	RCA	CA3136	3172-138
3137	RCA	CA3137	3170-155
3138	RCA	CA3138	3157-158
		CA3138A	3157-159
3139	RCA	CA3139	3170-39
314	Toshiba	TMM314A	3777-40
		TMM314A-1	3776-77
		TMM314AL	3777-41
		TMM314AL-1	3776-78
3140	**HybridSys**	**HS3140B-3**	**★2985**
			2657-47
		HS3140B-4	**★2985**
			2657-32
		HS3140C-3	**★2985**
			2657-46
		HS3140C-4	**★2985**
			2657-33
	MicroPwr	**MP3140B-3**	**★3046**
			2657-51
		MP3140B-4	**★3046**
			2657-45
		MP3140C-3	**★3046**
			2657-52
		MP3140C-4	**★3046**
			2657-46
	RCA	**CA3140**	**★3595**
			3175-43
			3202-7
		CA3140A	**★3595**
			3194-33
3141	**RCA**	**CA3141**	**★3601**
			3158-147
3142	RCA	CA3142	3171-141
3143	RCA	CA3143	3170-156
			¶ 303-3
			¶ 303-7
3144	RCA	CA3144	3170-157
			¶ 303-3
			¶ 303-7
3145	Plessey	SL3145	3157-14
	RCA	CA3145	3170-158
3146	National	LM3146	3157-11
	RCA	**CA3146**	**★3601**
			3157-18
		CA3146A	**★3601**
			3157-19
	SiliconG	SG3146	3157-28
315	**Motorola**	**MVME315**	**★2041**
	Siemens	TCA315	3176-33
			3203-3
	Toshiba	TMM315	3780-3
		TMM315-1	3779-106
3150	Sanyo	LA3150	3165-136
	Telmos	TH3150	4468-48
3151	RCA	CA3151	3170-159
3153	RCA	CA3153	3170-160
3154	RCA	CA3154	3171-142
			¶ 303-2
3155	Sanyo	LA3155	3165-168
3156	RCA	CA3156	3170-161
3158	RCA	CA3158	3170-162

Base Number	Source	Device	Page-Line
3159	RCA	CA3159	3171-96
316	National	LM316	3200-35
		LM316A	3192-28
	Panasonic	AN316	3170-8
3160	**HybridSys**	**HS3160B-3**	**★2985**
			2659-29
		HS3160B-4	**★2985**
			2658-47
		HS3160C-3	**★2985**
			2659-30
		HS3160C-4	**★2985**
			2658-48
	Motorola	MC3160	615-6
	RCA	**CA3160**	**★3596**
			3175-44
			3202-6
		CA3160A	**★3596**
			3194-30
	Sanyo	LA3160	3165-169
3161	Motorola	MC3161	617-123
	RCA	**CA3161**	**★3600**
			2637-26
	Sanyo	LA3161	3165-170
3162	Motorola	MC3162	617-124
	RCA	**CA3162**	**★3600**
			2637-27
3163	RCA	CA3163	641-22
			3215-81
3164	**RCA**	**CA3164**	**★3604**
			3173-93
		CA3164E	**★3604**
			3232-33
3165	**RCA**	**CA3165**	**★3602**
			3233-71
3166	RCA	CA3166	3155-141
3168	**RCA**	**CA3168**	**★3599**
			2662-70
3169	**RCA**	**CA3169**	**★3602**
			3234-137
		CA3169M	**★3602**
			3234-138
317	Fairchild	uA317	3228-107
	Lambda	LLM317	3228-108
	LinearTech	LM317	3228-110
		LM317AHV	3229-62
		LM317HV	3229-58
		LT317A	3228-112
		LT317AHV	3229-60
	MCE	MCELM317	3228-115
	Motorola	**LM317**	**★3532**
			3228-118
		LM317L	**★3532**
			3228-99
		LM317M	**★3532**
			3229-28
	National	LM317	3228-121
		LM317L	3228-100
	SiliconG	SG317	3228-103
			3228-124
	TI	LM317	3228-126
		TL317	3228-57
	Unitrode	**UC317**	**★3711**
			3229-5
3170	**LSILogic**	**LL3170**	**★4762**
			4467-52
	RCA	CA3170	3170-163
	Sanyo	LA3170	3165-137
3172	RCA	CA3172	3170-164
3177	RCA	CA3177	3156-1
3179	**RCA**	**CA3179**	**★3603**
			641-23
	RCA	CA3179	3214-70
			3215-82
318	AMD	LM318	3201-35
	AnalogSys	MA318	3198-35
	Fairchild	uA318	3201-36
	Harris	LM318	3201-37
	LinearTech	LM318	3201-38
	MicroPwr	MP318	3157-50
	National	LM318	3201-39
	Panasonic	AN318	3170-21
	Telefunken	U318	3169-59
	TI	LM318	3201-40
3182	**Harris**	**HS3182**	**★4644**
			2671-20
			2685-9

Arranged alphanumerically from left to right.

© IC MASTER 1984

Base Number	Source	Device	Page-Line
3183	**RCA**	**CA3183**	★**3601**
			3157-168
	SiliconG	SG3183	3157-171
		SG3183A	3157-172
3189	National	LM3189	3168-64
	RCA	CA3189	3168-76
	Signetics	CA3189	3168-89
319	AMD	LM319	3162-4
	National	LM319	3162-5
	NEC	uPC319	3162-6
	Signetics	LM319	3162-7
3190	Motorola	TDA3190P	3171-161
	SGS	TDA3190	3172-5
	Sprague	TDA3190	3172-15
	Toshiba	T3190	1350-102
3191	RCA	CA3191	3172-139
3192	RCA	CA3192	3172-140
3193	**RCA**	**CA3193**	★**3594**
			3187-3
		CA3193A	★**3594**
			3184-20
		CA3193B	★**3594**
			3182-58
3194	RCA	CA3194	3170-165
3195	RCA	CA3195	3168-141
3199	**RCA**	**CA3199**	★**3603**
			600-22
	RCA	CA3199	3214-71
31L01	AMD	AM31L01C	3771-42
		AM31L01M	3771-43
32	AD	ADVFG32	3239-24
	Burr-Brown	**MP32**	★**2849**
			1344-83
			1345-41
			1348-62
			1354-103
		VFC32	★**2849**
			★**2853**
			3233-100
			3239-51
			¶ 284-20
		VFC32M	★**2849**
			★**2853**
			3233-104
			3239-52
			¶ 284-20
	Cromemco	**32KBS**	★**2012**
	FujitsuA	**FBM32DA**	★**3940**
			3768-8
	MCE	MCEVFC32	3239-64
	MicroPwr	MPVFC32B	3233-120
		MPVFC32K	3233-121
		MPVFC32S	3233-122
	PMI	**OP-32**	★**3566**
			3195-36
		OP-32A	★**3566**
			3185-6
		OP-32B	★**3566**
			3186-59
		OP-32E	★**3566**
			3185-5
		OP-32F	★**3566**
			3186-60
		OP-32G	★**3566**
			3188-42
	Reticon	RL32WD	3234-80
		TAD32A	3238-89
	Wintek	**SFP32**	★**2062**
320	Amperex	OM320	3171-108
	AnalogSys	MZ320	3174-40
	Burr-Brown	**VFC320**	★**2849**
			3239-25
		VFC320B	★**2849**
			3233-102
		VFC320S	★**2849**
			3233-103
	Exar	XR320	3220-4
			¶ 310-1
			¶ 310-3
	ITT	DF320	3217-37
	National	COP320	1338-62
		COP320L	1338-63
	SiliconG	SG320-05K	3226-42
		SG320-05P	3226-29
		SG320-05R	3226-43
		SG320-05T	3226-23
			(Continued)

Base Number	Source	Device	Page-Line
320	SiliconG	SG320-08K	3226-98
		SG320-08P	3226-99
		SG320-08R	3226-100
		SG320-08T	3226-89
		SG320-12K	3227-11
		SG320-12P	3226-134
		SG320-12R	3227-12
		SG320-12T	3226-121
		SG320-15K	3227-62
		SG320-15P	3227-63
		SG320-15R	3227-51
		SG320-15T	3227-36
		SG320-18K	3227-88
		SG320-18P	3227-89
		SG320-18R	3227-90
		SG320-18T	3227-81
		SG320-5	3226-68
			3226-62
			3226-69
			3226-59
	Siliconix	DF320	3217-26
		DF320A	3217-27
	TI	**TMS320**	★**1699**
3200	Cherry	CS3200L	4473-19
	Supertex	CM3200-2	3785-37
		CM3200-3	3785-39
		MM3200	3785-38
	Telmos	TM3200	4468-49
32008	DDC	MT32008	2686-6
			1351-115
			1355-13
3201	Aptek	AMS3201	3219-5
	RCA	CA3201	3170-166
	Sanyo	LA3201	3169-143
	Sprague	UGN-3201M	641-80
3202	RCA	CA3202	3171-73
3203	Burr-Brown	VFC3203	3239-26
	Sprague	UGN-3203M	641-81
32032	Fairchild	F32032	1352-48
	National	**NS32032**	★**1513**
			1352-49
	National	NS32032	1289-11
3204	Panasonic	MN3204	3165-183
			3232-44
3205	Burr-Brown	VFC3205	3233-101
	Siemens	SDA3205	3169-53
3206	Siemens	SDA3206	3169-54
3207	Panasonic	MN3207	3165-184
			3232-45
	RCA	**CA3207**	★**3599**
			2679-12
	Signetics	3207A	2682-165
		3207A-1	2682-166
	Thomson-CSF		
		TDE3207	2679-57
3208	**RCA**	**CA3208**	★**3599**
			2679-11
3209	RCA	CA3209	3168-77
	Siemens	SAB3209	3169-48
320H12	National	LM320H12	3226-118
320H15	National	LM320H15	3227-33
320H5	National	LM320H5	3226-18
320K12	National	LM320K12	3226-129
320K15	National	LM320K15	3227-46
320K5	National	LM320K5	3226-36
320L05	National	LM320L05	3226-9
320L12	National	LM320L12	3226-112
320L15	National	LM320L15	3227-27
320ML05			
	National	LM320ML05	3226-14
320ML15			
	National	LM320ML15	3227-37
320MP12			
	National	LM320MP12	3226-124
320MP15			
	National	LM320MP15	3227-40
320MP5			
	National	LM320MP5	3226-19
320T12	National	LM320T12	3226-130
320T15	National	LM320T15	3227-47
320T5	National	LM320T5	3226-37
321	Amperex	OM321	3171-109
	Fairchild	CCD321	3788-9
		CCD321A	3239-5
	National	COP321	1338-64
		COP321L	1338-65
			(Continued)

Base Number	Source	Device	Page-Line
321	National	LM321	3156-31
		LM321A	3156-32
	Panasonic	AN321	3170-37
	Siemens	TCA321	3199-59
	TeledyneS	321A/C	601-104
		321B/M	601-105
	Telefunken	U321	3169-60
	TI	TL321C	3180-35
			3209-7
		TL321I	3196-27
		TL321M	3180-36
			3196-28
3210	Aptek	AMS3210	3219-6
	LSILogic	**LL3210**	★**4762**
			4467-53
	RCA	CA3210	3171-97
			¶ 303-11
	Sanyo	LA3210	3169-144
	Siemens	SAB3210	3169-49
3211	**Emulogic**	**ECL3211**	★**1904**
			1811-8
	RCA	**CA3211**	★**3603**
			600-29
	RCA	CA3211	3214-84
	Siemens	SAB3211	2662-59
3212	AMD	AM3212	1345-138
		M3212	1345-141
32128	Signetics	32128-45	3787-32
3215	RCA	CA3215	3168-78
3216	AMD	AM3216	1345-53
		M3216	1345-57
	National	DP3216	1345-66
	RCA	CA3216	3172-141
	Sanyo	LM3216	3167-63
3217	RCA	CA3217	3170-167
			¶ 304-2
	SiliconG	SG3217	3199-5
3219	**RCA**	**CA3219**	★**3602**
			2683-16
322	Amperex	OM322	3171-110
	AnalogSys	MA322	3193-27
	National	LM322	3220-15
	Siemens	TCA322	3197-21
	Siliconix	DF322	3217-28
	TeledyneS	322A/C	601-85
		322B/M	601-86
	TI	TL322C	3209-30
		TL322M	3209-19
3220	Sprague	UGN-3220S	641-82
			3234-21
3221	Motorola	MC3221	3164-71
	RCA	CA3221	3170-168
3223	RCA	CA3223	3171-74
3226	AMD	AM3226	1345-54
		M3226	1345-58
	National	DP3226	1345-67
	RCA	CD3226	3172-182
3227	**RCA**	**CA3227**	★**3601**
			3157-177
3228	**RCA**	**CA3228**	★**3602**
			3234-152
323	Amperex	OM323	3171-111
		OM323A	3171-112
	Fairchild	SH323	3221-119
		uA323	3221-122
	LinearTech	LM323	3221-127
		LM323A	3221-128
	Motorola	**LM323**	★**3531**
			3221-133
		LM323A	★**3531**
			3221-134
	National	LM323	3222-5
	SiliconG	SG323	3222-10
	TeledyneS	323A/C	601-91
		323B/M	601-92
	Toshiba	TMM323-1	3765-60
3232	Motorola	MC3232A	2680-102
	RCA	CA3232	600-28
324	AnalogSys	MA324	3199-23
	Fairchild	uA324	3180-47
	Intersil	LM324	3180-49
	Motorola	LM324	3180-52
	National	**COP324C**	★**1527**
			1338-41
	National	LM324	3180-55
		LM324A	3210-53
			(Continued)

Base Number	Source	Device	Page-Line
324	NEC	uPC324	3180-56
	Raytheon	LM324	3180-59
	RCA	CA324	3180-62
	Signetics	LM324	3180-65
	SiliconG	SG324	3180-68
	TeledyneS	324A/C	601-106
		324B/M	601-107
	TI	LM324	3180-72
		LM324A	3210-54
3240	**RCA**	**CA3240**	★**3595**
			3180-39
		CA3240A	★**3595**
			3206-39
3242	Motorola	MC3242A	2680-105
			¶ 320-10
3245	Fairchild	3245	2683-37
	National	DS3245	2682-146
3246	**RCA**	**CA3246**	★**3601**
			3157-178
325	**National**	**COP325C**	★**1527**
			1338-42
	National	LM325	3228-13
	NEC	uPC325	3228-52
	Siemens	TCA325	3176-34
			3199-60
	TeledyneS	325A/C	601-108
		325B/M	601-109
3250	**LSILogic**	**LL3250**	★**4762**
			4467-54
	SiliconG	SG3250	3198-18
3253	SiliconG	SG3253	3208-27
3257	Fairchild	3257	3755-23
3258	Fairchild	3258	3755-14
32581	Fairchild	32581	3755-15
32582	Fairchild	32582	3755-16
326	AnalogSys	MA326	3193-28
	National	LM326	3228-6
	TeledyneS	326A/C	601-110
		326B/M	601-111
3260	Fairchild	3260	3783-105
	RCA	**CA3260**	★**3595**
			3175-45
		CA3260AE	★**3595**
			3206-37
		CA3260AT	★**3595**
			3206-38
		CA3260B	★**3595**
			3205-1
		CA3260E	★**3595**
			3209-33
		CA3260T	★**3595**
			3209-34
3262	Fairchild	3262A	3170-48
		3262B	3170-49
3262210			
	TI	**TMDS3262210**	★**1931**
327	AnalogSys	MA327	3185-8
	Telefunken	U327	3169-61
3271	**Burr-Brown**	**3271**	★**2850**
	Siemens	SAB3271	3169-50
3273	Harris	HS3273	2685-65
328	AnalogSys	MQ328	3239-86
	Siliconix	DF328	3217-29
	Telefunken	U328	3169-62
3280	**RCA**	**CA3280**	★**3597**
			3206-17
3282	**Harris**	**HS3282**	★**4648**
			2685-10
329	AnalogSys	MA329	3202-35
	LinearTech	LM329	3237-11
	National	LM329	3237-17
	Raytheon	LM329	3237-21
3290	**RCA**	**CA3290**	★**3598**
			3162-15
		CA3290A	★**3598**
			3162-11
		CA3290B	★**3598**
			3161-52
3291	**Burr-Brown**	**3291**	★**2850**
			3182-60
32C032	**National**	**NS32C032**	★**1513**
			1352-50
32C132	**National**	**NS32C132**	★**1513**
			1352-51
32C32	National	NS32C32	1352-52
32X32	Reticon	RA-32X32A	3234-63

¶ Indicates page number in Application Note Directory.
★ Indicates addition data is provided on the page noted.

Base Number	Source	Device	Page-Line
330	National	LM330-5	3221-28
	TI	LM330-5	3221-20
3300	**Holt**	**HI3300**	★**4745**
			4468-4
	Hughes	HNVM3300	3758-6
	RCA	**CA3300**	★**3600**
			2625-17
	Thomson-CSF		
		CRN3300	3218-98
3301	Motorola	MC3301	3180-89
	National	LM3301	3180-90
	NEC	uPD3301	1344-91
			1345-100
			1346-111
	Raytheon	RC3301	3180-91
	Sanyo	LA3301	3168-143
3302	Motorola	MC3302	3163-39
	National	LM3302	3163-43
	Signetics	MC3302	3163-40
	SiliconG	SG3302	3163-41
	TI	LM3302	3160-45
	Thomson-CSF		
		TDF3302	3163-42
3303	Fairchild	uA3303C	3180-75
	Motorola	MC3303	3180-77
		MPQ3303	3157-149
	Signetics	MC3303	3213-1
	TI	MC3303	3213-2
33063	**Motorola**	**MC33063**	★**3533**
			3230-58
33074	Motorola	MC33074	3180-82
			3211-9
		MC33074A	3210-26
3308	**RCA**	**CA3308**	★**3600**
			2625-44
	Synertek	**SY3308**	★**4211**
			3783-33
		SY3308R	★**4211**
			3783-27
331	HybridSys	DAC331B-10	2644-47
		DAC331B-12	2651-47
		DAC331B-14	2657-35
		DAC331B-8	2641-41
		DAC331C-10	2644-48
		DAC331C-12	2651-48
		DAC331C-14	2657-36
		DAC331C-8	2641-42
	National	LM331	3233-127
		LM331A	3233-128
	SGS	TBA331	3157-20
	Siemens	TCA331	3176-35
			3203-4
	Siliconix	DF331A	3216-126
	TeledyneS	331A/C	602-5
		331B/M	602-6
	TI	TL331C	3160-14
		TL331M	3160-13
	Toshiba	TMM331A	3784-43
3310	SGS	TDA3310	3157-183
	Sprague	ULN-3310	3234-128
3311	Signetics	PCD3311	3219-90
3312	Signetics	PCD3312	3219-91
3316	MMI	SYM3316	3783-100
		SYM3316A	3783-101
	Synertek	**SY3316**	★**4211**
			3783-103
		SY3316A	★**4211**
			3783-104
		SY3316R	★**4211**
			3783-95
		SYM3316	★ **535**
			3783-106
		SYM3316A	★ **535**
			3783-107
332	AnalogSys	MA332	3197-23
	Siemens	TCA332	3176-36
			3201-58
	Siliconix	DF332A	3216-127
	TeledyneS	332A/C	601-15
		332B/M	601-16
3320	Motorola	MC3320	3164-72
	Signetics	PCD3320	3217-19
3321	Motorola	MC3321	3164-73
	Signetics	PCD3321	3217-20
3322	Signetics	PCD3322	3217-21
3323	Signetics	PCD3323	3217-22
3324	Motorola	MC3324	3162-13
			3236-1
		MC3324A	3162-8
			3236-2
	Signetics	PCD3324	3217-4
3325	Motorola	MC3325	3166-23
	Signetics	PCD3325	3217-5
3329	**Burr-Brown**	**3329**	★**2850**
			3155-13
			3175-99
333	AnalogSys	MA333	3200-32
	TeledyneS	333A/C	602-7
		333B/M	602-8
	Toshiba	TMM333	3785-31
		TSU333-2	3785-32
3330	Motorola	MC3330	3155-31
	Sprague	ULN-3330Y	3234-126
3333	Motorola	MC3333	3166-9
3334	Motorola	MC3334	3166-8
334	AnalogSys	MA334	3200-33
	National	LM334	3232-107
			3238-137
	TeledyneS	334A/C	601-7
	Toshiba	TMM334	3784-44
3340	Motorola	MC3340	3167-59
	Signetics	PCD3340	3216-163
3341	AMD	AM3341C	3757-33
	Fairchild	3341	3757-34
		3341A	3757-38
		3341M	3757-35
3342	Fairchild	3342	3791-61
3344	Motorola	MC3344	3233-99
3346	Motorola	MC3346	3157-6
3347	AMD	AM3347	3791-65
	Fairchild	3347	3791-66
3348	Fairchild	3348	3791-38
	MicroNet	**MN3348**	★**3044**
			2652-36
		MN3348H	★**3044**
			2652-37
3349	Fairchild	3349	3791-39
	MicroNet	**MN3349**	★**3044**
			2652-38
		MN3349H	★**3044**
			2652-39
335	Amperex	OM335	3171-113
	AnalogSys	MJ335	3232-121
	HybridSys	DAC335B-12	2651-27
		DAC335C-12	2651-28
	National	LM335	3238-138
	Siemens	TCA335	3176-37
	TeledyneS	335A/C	601-11
3350	Motorola	MC3350	3157-138
	Sanyo	LA3350	3168-144
	Telmos	TM3350	4468-50
3351	Fairchild	3351-3	3757-31
			¶ 323-7
		3351M	3757-29
			¶ 323-7
33511	Fairchild	33511	3757-32
33512	Fairchild	33512	3757-28
3354	**Burr-Brown**	**3354**	★**2850**
3356	Motorola	MC3356	3217-109
3357	Fairchild	3357-1	3791-74
		3357-2	3791-67
		F3357M	3791-75
	Motorola	MC3357	3168-121
3359	Motorola	MC3359	3168-103
336	Amperex	OM336	3171-114
	AnalogSys	MA336	3209-21
	HybridSys	DAC336B-1	2642-1
		DAC336B-12	2652-14
		DAC336B-8	2641-53
		DAC336C-12	2652-15
		DAC336C-8	2641-54
	LinearTech	LM336-2	3236-98
	National	LM336-2	3236-122
		LM336-5	3236-159
		LM336B-5	3236-160
	TI	TL336C	3163-45
		TL336M	3163-46
3361	Sanyo	LA3361	3168-145
3365	Sanyo	LA3365	3168-146
337	Amperex	OM337	3171-115
		OM337A	3171-116
	AnalogSys	MA337	3184-57
			(Continued)
337	HybridSys	DAC337B-0	2642-2
		DAC337B-2	2642-3
		DAC337B-3	2645-17
		DAC337B-4	2645-4
		DAC337B-5	2645-5
		DAC337B-6	2642-17
		DAC337B-7	2645-18
		DAC337C-0	2642-4
		DAC337C-1	2642-5
		DAC337C-2	2642-6
		DAC337C-3	2645-19
		DAC337C-4	2645-6
		DAC337C-5	2645-7
		DAC337C-6	2642-18
		DAC337C-7	2645-20
	LinearTech	LM337	3229-85
		LM337HV	3229-119
			3229-123
		LT337A	3229-87
		LT337AHV	3229-121
			3229-125
	MCE	MCELM337	3229-96
	Motorola	**LM337**	★**3532**
			3229-92
		LM337M	★**3532**
			3229-93
	National	LM337	3229-99
			3230-2
		LM337L	3229-128
		LT337A	3229-101
	Panasonic	AN337	3170-6
	SiliconG	SG337	3229-104
	TI	LM337	3229-107
	Unitrode	**UC337**	★**3711**
			3229-110
			3230-5
3370	Motorola	MC3370	3239-93
	Sanyo	LA3370	3168-147
3373	Motorola	MC3373	3168-176
3375	Sanyo	LA3375	3168-148
338	**HybridSys**	**DAC338B-12-0**	★**2983**
			2655-48
		DAC338B-12-1	★**2983**
			2654-38
		DAC338B-12-2	★**2983**
			2651-46
	Lambda	LLM338	3228-89
	LinearTech	LM338	3228-79
		LT338A	3228-81
	Micropac	LML338-15	3224-106
		MLM338-05	3222-20
		MLM338-12	3224-7
	National	LM338	3228-84
3380	Sanyo	LA3380	3168-149
3381	Sanyo	LA3381	3168-150
3386	Motorola	MC3386	3157-7
339	AMD	LM339	3163-6
		LM339A	3162-30
	Amperex	OM339	3171-117
	AnalogSys	MA339	3200-36
	Fairchild	uA339	3163-8
		uA339A	3162-32
	Intersil	LM339	3163-9
		LM339A	3162-33
	Motorola	LM339	3163-11
		LM339A	3162-35
	National	LM339	3163-13
		LM339A	3162-37
		LP339	3162-50
	NEC	uPC339	3163-15
	PMI	PM-339	3163-18
		PM-339A	3162-39
	Raytheon	LM339	3163-20
	RCA	**CA339**	★**3599**
			3163-22
		CA339A	★**3599**
			3162-41
	Signetics	LM339	3163-24
	SiliconG	SG339	3163-26
		SG339A	3162-43
	TI	LM339	3163-28
3390	Sanyo	LA3390	3168-151
3393	Motorola	MC3393	3215-73
3396	Motorola	MC3396	3214-61
340	**Motorola**	**LM340-12**	★**3531**
			3223-91
			(Continued)
340	**Motorola**	**LM340-15**	★**3531**
			3224-64
		LM340-18	★**3531**
			3225-8
		LM340-24	★**3531**
			3225-94
		LM340-5	★**3531**
			3221-86
		LM340-6	★**3531**
			3222-51
		LM340-8	★**3531**
			3222-118
	National	COP340	1338-66
		LM340-12	3223-98
			¶ 314-6
		LM340-15	3224-71
			¶ 314-6
		LM340-5	3221-94
			¶ 314-6
		LM340A-12	3223-99
			¶ 314-6
		LM340A-15	3224-72
			¶ 314-6
		LM340A-5	3221-95
			¶ 314-6
		LM340LA-12	3223-49
			¶ 314-6
		LM340LA-15	3224-23
			¶ 314-6
	Panasonic	AN340	3171-166
	SiliconG	SG340-05K	3221-99
		SG340-05R	3221-100
		SG340-05T	3221-50
		SG340-06K	3222-58
		SG340-06R	3222-59
		SG340-06T	3222-36
		SG340-08K	3222-125
		SG340-08R	3222-126
		SG340-08T	3222-105
		SG340-12K	3223-105
		SG340-12P	3223-106
		SG340-12R	3223-107
		SG340-12T	3223-67
		SG340-18K	3225-15
		SG340-18R	3225-16
		SG340-18T	3224-121
		SG340-20P	3225-51
		SG340-20R	3225-52
		SG340-20T	3225-40
		SG340-24K	3225-101
		SG340-24P	3225-102
		SG340-24R	3225-103
		SG340-24T	3225-74
	TI	LM340-12	3223-115
		LM340-15	3224-83
		LM340-5	3221-108
3400	GI	ER3400	3758-53
			¶ 317-13
			¶ 318-1
			¶ 318-7
	NCR	NCR3400	3758-54
	SMC	FDC3400	1353-106
34000	Mostek	MK34000-3	3784-12
		MK34000-84	3784-32
34001	Motorola	MC34001	3201-1
		MC34001A	3190-7
		MC34001B	3195-22
34002	Motorola	MC34002A	3205-14
34003	Motorola	MC34003A	3204-12
34004	Motorola	MC34004	3213-15
		MC34004B	3211-24
34009	MCE	MT34009	592-41
3401	Motorola	MC3401	3180-85
	National	LM3401	3180-86
	Raytheon	RC3401	3180-87
	RCA	CA3401	3180-88
	SiliconG	SG3401	3156-120
34010	**Motorola**	**MC34010**	★**3060**
			3217-65
34011	**Motorola**	**MC34011**	★**3060**
			3217-66
34012	**Motorola**	**MC34012**	★**3060**
			3219-20
		MC34012-1	★**3060**
			3219-27
		MC34012-2	★**3060**
			(Continued)

Arranged alphanumerically from left to right.

Base Number	Source	Device	Page-Line
34012	**Motorola**	**MC34012-2**	**3219-28**
		MC34012-3	**★3060**
			3219-29
34013	**Motorola**	**MC34013**	**★3060**
34015	Motorola	MC34015	3217-9
34017	**Motorola**	**MC34017**	**★3060**
34019	Motorola	MC34019	3218-85
3402	SiliconG	SG3402	3235-46
34022	Motorola	MC34022A	3204-13
			3205-8
3403	**Exar**	**XR3403**	**★3378**
			3180-73
			¶ 292-5
	Fairchild	uA3403	3213-27
		uA3403C	3180-76
	Motorola	MC3403	3180-78
	Raytheon	RC3403	3180-80
		RC3403A	3212-43
	Signetics	MC3403	3213-25
	TI	MC3403	3213-28
	Thomson-CSF		
		TDB3403	3213-26
		TDC3403	3211-50
		TDF3403	3213-3
34044	Motorola	MC34044	2679-26
34046	Motorola	MC34046S	2679-28
34047	Motorola	MC34047S	2679-29
3405	Motorola	MC3405	3156-7
			3163-38
34060	**Motorola**	**MC34060**	**★3533**
			3230-59
	TI	MC34060	3230-131
34061	Motorola	MC34061	3235-163
		MC34061A	3235-164
34062	Motorola	MC34062	3235-161
34063	**Motorola**	**MC34063**	**★3533**
			3230-60
34074	**Motorola**	**MC34074**	**★3530**
			3180-83
			3211-10
		MC34074A	**★3530**
			3210-27
3408	**Motorola**	**MC3408**	**★3069**
			2642-43
341	National	COP341	1338-67
		LM341-12	3223-62
			¶ 314-6
		LM341-15	3224-36
			¶ 314-6
		LM341-5	3221-42
			¶ 314-6
	TeledyneS	341A/C	601-117
		341B/M	601-118
3410	**Motorola**	**MC3410**	**★3069**
			2644-4
		MC3410C	**★3069**
			2645-43
	SGS	TDA3410	3165-139
	Signetics	MC3410	2644-6
		MC3410C	2645-44
3412	**MicroNet**	**MN3412**	**★3044**
			2653-4
	Motorola	**MC3412**	**★3067**
			2650-5
3416	**Motorola**	**MC3416**	**★3060**
			2622-60
			¶ 290-13
	Toshiba	T3416	1350-104
3417	Exar	XR3417	3216-150
	Motorola	MC3417	3216-156
3418	Exar	XR3418	3216-151
	Motorola	MC3418	3216-157
	Toshiba	T3418	1350-103
3419	**Motorola**	**MC3419**	**★3060**
			3218-86
		MC3419A	**★3060**
			3218-87
		MC3419C	**★3060**
			3218-88
342	AnalogSys	MA342	3193-57
	National	COP342	1338-51
		LM342-12	3223-57
		LM342-15	3224-31
		LM342-5	3221-35
	SGS	LS342	3218-35
			(Continued)

Base Number	Source	Device	Page-Line
342	TeledyneS	342A/C	602-13
		342B/M	602-14
3420	**Motorola**	**MC3420**	**★3533**
			3230-61
	RCA	**CA3420**	**★3594**
			3200-29
		CA3420A	**★3594**
			3194-24
		CA3420B	**★3594**
			3189-10
	SGS	TDA3420	3165-140
3423	Motorola	MC3423	3235-110
	SiliconG	SG3423	3235-114
		SG3423A	3235-115
	TI	MC3423	3235-119
3424	Motorola	MC3424	3162-14
			3236-3
		MC3424A	3162-9
			3236-4
3425	Motorola	MC3425	3236-7
		MC3425A	3236-8
3426	Motorola	MC3426	3173-34
343	AnalogSys	MC343	3236-37
	MicroNet	**MN343**	**★3045**
			3238-28
		MN343H	**★3045**
			3238-29
	National	LM343	3176-148
	TeledyneS	343A/C	601-1
		343B/M	601-2
3430	**Burr-Brown**	**3430**	**★2850**
	Motorola	MC3430	2684-59
			3162-44
3431	**Burr-Brown**	**3431**	**★2850**
	Motorola	MC3431	2684-60
			3162-45
3432	Motorola	MC3432	2684-61
			3162-46
3433	Motorola	MC3433	2684-62
			3162-47
3437	Motorola	MC3437	2672-61
3438	Motorola	MC3438	2675-1
344	AnalogSys	MA344	3192-30
	MicroNet	**MN344**	**★3045**
			3238-30
		MN344H	**★3045**
			3238-31
	National	**COP344C**	**★1527**
			1338-43
	National	LM344	3176-136
			3200-7
	TeledyneS	344A/C	601-114
3440	**Motorola**	**MC3440A**	**★3064**
			2675-40
	RCA	**CA3440**	**★3594**
			3200-31
		CA3440A	**★3594**
			3194-32
		CA3440B	**★3594**
			3189-22
3441	Motorola	MC3441A	2675-41
3442	Motorola	MC3442A	1343-24
3443	Motorola	MC3443A	2675-42
	TI	MC3443	2675-46
3444	Toshiba	T3444A	1353-82
		T3444B	1352-91
		T3444D	1353-103
3446	**Motorola**	**MC3446A**	**★3064**
			2675-19
	TI	MC3446	2675-20
3447	**Motorola**	**MC3447**	**★3064**
			★3066
			2678-35
3448	AMD	AM3448A	2675-34
	Fairchild	uA3448A	2675-35
	Motorola	**MC3448A**	**★3064**
			2675-36
345	Amperex	OM345	3171-118
	AnalogSys	MA345	3205-49
	HybridSys	DAC345I-10	2655-47
		DAC345I-12	2651-45
		DAC345V-10	2655-50
		DAC345V-12	2652-25
	National	**COP345C**	**★1527**
			1338-44
	Siemens	TCA345	3238-154

Base Number	Source	Device	Page-Line
3450	**Burr-Brown**	**3450**	**★2851**
	Motorola	MC3450	2674-16
			¶ 323-5
3451	**Burr-Brown**	**3451**	**★2851**
3452	**Burr-Brown**	**3452**	**★2851**
	Motorola	MC3452	2674-19
			¶ 323-5
3453	Motorola	MC3453A	2671-31
3455	**Burr-Brown**	**3455**	**★2851**
3456	**Burr-Brown**	**3456**	**★2851**
			3155-114
	Motorola	MC3456	3220-75
3458	Motorola	MC3458	3180-38
3459	Motorola	MC3459	2683-5
			¶ 323-5
345K5	National	LM345K5	3226-55
			3226-76
346	AD	ADX346	3237-169
	AnalogSys	MD346	2679-13
	Exar	**XR346**	**★3377**
			3210-5
		XR346-2	**★3377**
			3212-45
	MicroNet	**MN346**	**★3045**
			3238-32
		MN346H	**★3045**
			3238-33
	National	LM346	3210-12
	Raytheon	LM346	3210-15
3460	Motorola	MC3460	2683-6
			¶ 323-5
3466	Motorola	MC3466	2683-39
3467	Fairchild	FQ3467	3157-163
	Motorola	MC3467	3156-41
		MHQ3467	3157-165
	National	DH3467C	3157-166
3468	Fairchild	FQ3468	3157-164
	Motorola	MC3468	3156-42
3469	**Motorola**	**MC3469**	**★3062**
347	Harris	LF347A	3210-23
		LF347B	3211-20
	HybridSys	DAC347LPB-10B	
			2644-54
		DAC347LPB-10U	
			2645-1
		DAC347LPB-12U	
			2652-50
		DAC347LPC-10B	
			2645-2
		DAC347LPC-10U	
			2645-3
		DAC347LPC-12B	
			2653-1
		DAC347LPC-12U	
			2653-2
		HAC347LPB-12B	
			2653-3
	MicroNet	**MN347**	**★3045**
			3238-34
		MN347H	**★3045**
			3238-35
	Motorola	LF347	3213-21
		LF347B	3211-25
	National	LF347	3213-22
			¶ 293-16
		LF347B	3211-26
			¶ 293-16
	TeledyneS	347A/C	602-15
		347B/M	602-16
3470	**Exar**	**XR3470A**	**★3372**
			★3373
			3155-43
	Motorola	**MC3470**	**★3061**
			3155-44
		MC3470A	**★3061**
			3155-45
	TI	MC3470	3155-46
3471	**Motorola**	**MC3471**	**★3062**
3476	Motorola	MC3476	3190-54
348	AMD	LM348	3212-28
	Fairchild	uA348	3212-30
	HybridSys	DAC348B-10	2644-52
		DAC348B-12	2652-45
		DAC348C-10	2644-53
		DAC348C-12	2652-46
	National	LM348	3212-32
			(Continued)

Base Number	Source	Device	Page-Line
348	Raytheon	LM348	3212-34
	TI	LM348	3212-36
3480	Motorola	MC3480	2680-99
			¶ 320-10
			1343-25
3481	**Motorola**	**MC3481**	**★3064**
			★3065
			2668-37
3482	**Motorola**	**MC3482**	**★3063**
			606-87
		MC3482A	**★3063**
			606-88
	Motorola	MC3482A	1343-124
	Motorola	**MC3482B**	**★3063**
			606-89
	Motorola	MC3482B	1343-125
3484V2	Motorola	MC3484V2	2681-5
			3166-13
3484V4	Motorola	MC3484V4	2681-6
			3166-14
3485	**Motorola**	**MC3485**	**★3064**
			★3065
			2668-38
3486	**Motorola**	**MC3486**	**★3064**
			2674-22
			¶ 287-1
			¶ 288-14
	National	DS3486	2674-23
	TI	MC3486	2674-24
3487	**Motorola**	**MC3487**	**★3064**
			2671-27
			¶ 287-1
			¶ 288-14
	National	DS3487	2671-28
	TI	MC3487	2671-29
3488	**Motorola**	**MC3488A**	**★3064**
			¶ 287-1
			¶ 288-14
349	HybridSys	DAC349B-12	2652-47
		DAC349B-3D	2657-8
		DAC349C-12	2652-48
		DAC349C-3D	**2657-9**
	National	LM349	3212-38
	Raytheon	LM349	3212-40
	TeledyneS	349A/C	602-42
3490	**Motorola**	**MC3490**	**2663-66**
3491	Motorola	MC3491	2663-124
3492	Motorola	MC3492	2663-125
3493	**RCA**	**CA3493**	**★3594**
			3187-4
		CA3493B	**★3594**
			3182-59
3494	Motorola	MC3494	2663-67
35	Motorola	EXORsetDS35	1815-4
	National	LM35	3238-139
350	Amperex	OM350	3171-119
	ArrayTech	AT-D-350	4466-6
		AT-HSD-350	4462-36
	Fujitsu	**B350**	**★4637**
			4461-9
	Lambda	LLM350	3228-88
	LinearTech	LM350	3228-60
		LM350A	3228-61
	MicroPwr	MP350	3157-99
	Motorola	**LM350**	**★3532**
			3228-64
	National	LM350	3228-67
	SiliconG	SG350	3228-72
		SG350A	3228-73
	TeledyneS	350A/C	602-11
			¶ 256-3
	TI	LM350	3228-74
	Unitrode	**UC350**	**★3711**
			3228-77
3500	**Burr-Brown**	**3500A**	**★2850**
			★2853
			3196-1
			¶ 294-3
		3500B	**★2850**
			★2853
			3190-58
			¶ 294-3
		3500C	**★2850**
			★2853
			3188-43
			¶ 294-3
			(Continued)

¶ Indicates page number in Application Note Directory.
★ Indicates addition data is provided on the page noted.

Base Number	Source	Device	Page-Line
3500	**Burr-Brown**	**3500E**	★2850
			★2853
			3187-8
			¶ 294-3
		3500MP	★2850
			★2853
			3205-23
			¶ 294-3
		3500R	★2850
			★2853
			3196-2
			¶ 294-3
		3500R/MIL	★2850
			★2853
			3196-3
			¶ 294-3
		3500S	★2850
			★2853
			3190-59
			¶ 294-3
		3500T	★2850
			★2853
			3188-44
			¶ 294-3
		3500U/883B	★2850
			★2853
			3196-4
			¶ 294-3
	Cherry	CS3500	4473-18
	Hughes	HNVM3500	3758-21
	National	TDA3500	3170-133
	Sanyo	LB3500	3214-67
	Signetics	TDA3500	3170-179
	SMC	CCC3500	1352-89
	Telmos	TM3500	4468-52
35001	Motorola	MC35001	3200-37
		MC35001A	3190-6
		MC35001B	3195-16
35002	Motorola	MC35002A	3205-7
		MC35002B	3206-49
35004	Motorola	MC35004	3213-16
		MC35004A	3210-12
		MC35004B	3211-17
3501	AMI	S3501	3216-97
	Aptek	AMS3501	3218-36
	Burr-Brown	**3501A**	★2850
			3195-36
		3501B	★2850
			3190-52
		3501C	★2850
			3190-51
		3501R	★2850
			3195-37
		3501S	★2850
			3190-53
	National	ADD3501	2637-12
			¶ 307-16
		TDA3501	3170-134
	SiliconG	SG3501A	3228-22
			¶ 314-5
	Sprague	UGN-3501	641-83
			3234-22
	Toshiba	TD3501A	609-141
3502	AMI	S3502	3216-98
	SiliconG	SG3502	3230-16
	Toshiba	TD3502A	603-40
35022	Motorola	MC35022	3204-36
			3205-16
		MC35022A	3204-11
		MC35022B	3204-49
3503	AMI	S3503	3216-67
	Burr-Brown	3503A	3203-14
		3503B	3202-41
		3503R	3203-15
		3503S	3202-42
	Exar	**XR3503**	★3378
			3180-74
	Motorola	MC3503	3180-79
	Raytheon	RM3503	3180-81
		RM3503A	3211-7
	Signetics	MC3503	3211-49
	SiliconG	SG3503	3236-126
	Toshiba	TD3503	3790-105
3504	AMI	S3504	3216-68
3505	Motorola	MC3505	3156-8
			3163-29
			(Continued)

Base Number	Source	Device	Page-Line
3505	Signetics	TDA3505	3170-180
	Toshiba	TD3505A	608-119
3506	**AMI**	**S3506**	★3348
			3216-58
	Mitel	MT3506	3216-59
35060	**Motorola**	**MC35060**	★3533
			3230-62
35061	Motorola	MC35061	3235-165
		MC35061A	3235-166
35062	Motorola	MC35062	3235-162
35063	**Motorola**	**MC35063**	★3533
			3230-63
3507	**AMI**	**S3507**	★3348
			3216-88
	Burr-Brown	**3507J**	★2851
			3176-98
			3201-23
	Mitel	MT3507	3216-89
		MT3507A	3216-90
35074	Motorola	MC35074	3180-84
			3211-11
		MC35074A	3210-28
3508	**Burr-Brown**	**3508J**	★2851
			3195-60
3509	SiliconG	SG3509	3232-31
351	AD	AD351J	3160-21
		AD351K	3160-22
		AD351S	3160-23
	MicroPwr	MP351	3157-100
	Motorola	LF351	3175-46
			3200-61
	National	LF351	3175-42
		LF351A	3190-8
		LF351B	3195-23
	TeledyneS	351A/C	602-10
3510	**Burr-Brown**	**3510A**	★2850
			★2853
			3184-12
		3510B	★2850
			★2853
			3183-40
		3510C	★2850
			★2853
			3182-21
		3510S	★2850
			★2853
			3183-41
		3510V	★2850
			★2853
			3183-42
	Motorola	**MC3510**	★3069
			2644-5
	RIFA	PBD3510	2679-52
	Signetics	MC3510	2645-31
		TDA3510	3170-181
3511	National	ADC3511	2637-11
			¶ 280-13
	RIFA	PBD3511	2679-53
3512	**Motorola**	**MC3512**	★3067
			2648-9
3513	RIFA	PBD3513	2681-77
3514	Fairchild	3514	3783-18
3516	Fairchild	F3516-35	3784-9
		F3516-45	3784-29
	Harris	**HS3516RH**	★4705
			3193-19
3517	Exar	XR3517	3216-152
	Motorola	MC3517	3216-158
3518	Exar	XR3518	3216-153
	Motorola	MC3518	3216-159
3519	Motorola	MC3519	3218-89
352	MicroPwr	MP352	3157-101
3520	**Motorola**	**MC3520**	★3533
			3230-64
	RIFA	PBD3520	2679-44
	Signetics	TDA3520	3170-182
3521	**Burr-Brown**	**3521H**	★2850
			3185-36
			¶ 294-2
		3521J	★2850
			3184-45
			¶ 294-2
		3521K	★2850
			3184-44
			¶ 294-2
		3521L	★2850
			(Continued)

Base Number	Source	Device	Page-Line
3521	**Burr-Brown**	**3521L**	3184-41
			¶ 294-2
		3521R	★2850
			3184-46
			¶ 294-2
3522	**AMI**	**S3522**	★3345
			3218-7
	Burr-Brown	**3522J**	★2850
			3187-44
		3522K	★2850
			3185-29
		3522L	★2850
			3194-17
		3522S	★2850
			3185-30
3523	Burr-Brown	3523J	3187-36
		3523K	3185-16
		3523L	3185-14
	Fairchild	**F3523**	★1465
	Motorola	MC3523	3235-111
	SiliconG	SG3523	3235-116
		SG3523A	3235-117
352301	RIFA	PBD352301	2679-124
			3158-36
		RBD352301	3158-39
352302	RIFA	PBD352302	2679-144
			3158-37
		RBD352302	3158-40
352303	RIFA	PBD352303	2679-96
			3158-38
		RBD352303	3158-41
352304	RIFA	PBD352304	2679-78
3524	**Exar**	**XR3524**	★3381
			3230-33
	Motorola	MC3524	3162-12
			3236-5
		MC3524A	3162-10
			3236-6
	National	LM3524	3230-83
	RCA	**CA3524**	★3602
			3230-92
	Signetics	**SG3524**	★3661
			3230-102
	SiliconG	SG3524	3230-111
			¶ 309-1
			¶ 309-3
	TI	SG3524	3231-2
	Unitrode	UC3524	3231-64
		UC3524A	3231-65
3525	AMI	S3525A	3216-8
			3216-35
		S3525B	3216-9
			3216-36
	Exar	**XR3525A**	★3381
			3230-34
	Motorola	MC3525	3236-9
		MC3525A	3236-10
	Motorola	**SG3525A**	★3533
			3230-71
	SiliconG	SG3525A	3230-112
	TI	SG3525A	3231-3
	Unitrode	UC3525A	3231-66
3526	**AMI**	**S3526**	★3346
			3219-49
		S3526A	★3346
			3216-10
		S3526B	★3346
			3216-11
	Motorola	**SG3526**	★3533
			3230-72
	SiliconG	SG3526	3230-113
	Unitrode	UC3526	3231-67
3527	**Burr-Brown**	**3527A**	★2850
			3185-28
		3527B	★2850
			3184-40
		3527C	★2850
			3185-27
	Exar	**XR3527A**	★3381
			3230-35
	Motorola	**SG3527A**	★3533
			3230-73
	SiliconG	SG3527	3230-114
		SG3527A	3230-115
	TI	SG3527A	3231-4
	Unitrode	UC3527A	3231-68

Base Number	Source	Device	Page-Line
3528	**AMI**	**S3528**	★3347
			3217-76
	Burr-Brown	**3528A**	★2850
			3185-17
		3528B	★2850
			3184-30
		3528C	★2850
			3185-12
	Fairchild	F3528-10	3778-12
		F3528-12	3778-42
		F3528-15	3778-72
		F3528-20	3778-122
		F3528-35	3779-26
		F3528L-10	3778-13
		F3528L-12	3778-43
		F3528L-15	3778-73
		F3528L-20	3778-123
353	Harris	LF353A	3205-17
		LF353B	3206-47
	Motorola	LF353	3209-28
	National	LF353	3209-29
			¶ 293-16
		LF353A	3205-13
			¶ 293-16
		LF353B	3206-51
			¶ 293-16
	Siemens	S353	641-108
	SiliconG	SG353-05	3222-11
		SG353-08	3223-6
		SG353-12	3224-2
		SG353-15	3224-102
		SG353-18	3225-32
3530	**Harris**	**HS3530RH**	★4709
			3193-12
35316	**Fairchild**	**F35316-25**	★1464
			3783-117
		F35316-30	★1464
			3783-122
3532	**Fairchild**	**F3532-30**	★1465
			3784-83
		F3532-35	★1465
			3784-108
		F3532-45	★1465
			3785-5
	SiliconG	SG3532	3229-33
3533	**Fairchild**	**F3533-30**	★1465
			3784-84
		F3533-35	★1465
			3784-109
		F3533-45	★1465
			3785-6
3534	RIFA	PBD3534	3219-86
3535	RIFA	PBD3535	3219-87
354	NEC	uPC354	3184-6
3540	Signetics	TDA3540	3172-156
3541	Signetics	TDA3541	3156-114
			3172-157
3542	AD	AD3542J	3202-47
	Burr-Brown	**3542J**	★2850
			3202-49
		3542S	★2850
			3202-50
	SiliconG	SG3542	3235-118
3543	**Exar**	**XR3543**	★3382
			3235-140
	SiliconG	SG3543	3235-145
			¶ 313-4
	Unitrode	**UC3543**	★3710
			3235-155
3544	SiliconG	SG3544	3235-146
	Unitrode	**UC3544**	★3710
			3235-156
3546	**Harris**	**HS3546RH**	★4714
			3192-4
3549	SiliconG	SG3549	3232-119
355	AMD	LF355	3200-43
		LF355A	3189-39
	Intersil	LF355	3200-44
		LF355A	3189-41
	Motorola	LF355	3200-45
		LF355A	3189-43
		LF355B	3194-55
	National	LF355	3200-46
		LF355A	3189-45
		LF355B	3194-58
	PMI	PM355	3200-47
			(Continued)

Arranged alphanumerically from left to right.

© IC MASTER 1984

Base Number	Source	Device	Page-Line
355	PMI	PM355A	3189-47
	TeledyneS	355A/C	602-38
			3220-51
		355B/M	3220-52
3550	**Burr-Brown**	**3550J**	★2851
			3176-101
			3187-45
		3550K	★2851
			3176-93
			3187-47
		3550S	★2851
			3176-102
			3187-46
3551	**Burr-Brown**	**3551J**	★2851
			3176-81
			3180-110
			3188-12
		3551S	★2851
			3176-82
			3180-111
			3188-13
	SiliconG	SG3551	2684-58
3553	**Burr-Brown**	**3553**	★2850
			★2851
			3155-17
			3174-11
			3175-89
3554	**AD**	**AD3554**	★3353
			3176-59
			3180-136
		AD3554A	★3353
			3175-95
			3189-26
		AD3554B	★3353
			3188-7
		AD3554D	★3353
			3175-96
		AD3554S	★3353
			3175-97
			3176-60
			3180-137
			3188-9
	Burr-Brown	**3554**	★2851
			3176-61
		3554A	★2851
			3175-100
			3180-125
			3189-58
		3554B	★2851
			3175-101
			3180-126
			3188-6
		3554S	★2851
			3175-102
			3180-127
			3188-8
	TeledyneP	TP3554	3175-106
3556	Motorola	MC3556	3220-76
3558	Motorola	MC3558	3207-22
356	AMD	LF356	3200-48
		LF356A	3189-49
	HybridSys	DAC356B-12	2653-16
		DAC356C-12	2653-17
		DAC356LPB-12	
			2653-18
		DAC356LPC-12	
			2653-19
	Intersil	LF356	3200-49
		LF356A	3189-51
	Motorola	LF356	3200-50
		LF356A	3189-53
		LF356B	3195-3
	National	LF356	3200-51
		LF356A	3189-55
		LF356B	3195-6
	PMI	PM-356	3200-52
		PM-356A	3189-57
	Signetics	LF356	3200-53
3562	Signetics	TDA3562	3170-183
3563	Signetics	TDA3563	3170-184
3564	**Fairchild**	**F3564-25**	★1465
			3785-83
		F3564-35	★1465
			3786-40
	Signetics	TDA3564	3172-158
3565	**Fairchild**	**F3565-25**	★1465
			3785-100
		F3565-35	★1465
			3786-41
3566	**Fairchild**	**F3566-25**	★1466
			3785-110
		F3566-35	★1466
			3786-55
3568	**Fairchild**	**F3568-25**	★1466
			3785-111
		F3568-35	★1466
			3786-56
3569	**Fairchild**	**F3569-25**	★1466
			3785-112
		F3569-35	★1466
			3786-57
357	AnalogSys	LF357CP	3200-58
	Intersil	LF357	3200-39
		LF357A	3189-31
	Motorola	LF357	3200-40
		LF357A	3189-33
		LF357B	3194-48
	National	LF357	3200-41
		LF357A	3189-35
		LF357B	3194-51
	PMI	PM-357	3200-42
		PM-357A	3189-37
3570	**Fairchild**	**F3570-25**	★1467
			3785-113
		F3570-35	★1467
			3786-58
3571	**Burr-Brown**	**3571A**	★2850
			3175-82
			3176-117
			3190-12
	Motorola	MC3571	3212-2
3572	**Burr-Brown**	**3572A**	★2850
			3175-67
			3176-118
			3190-13
3573	**Burr-Brown**	**3573**	★2850
			3175-75
			3201-10
3575	Motorola	MC3575	3210-9
358	MicroPwr	MP358	3157-94
	Motorola	LM358	3180-23
			3208-23
	National	LM358	3180-17
		LM358A	3180-27
			3206-12
	NEC	uPC358	3209-10
	RCA	CA358	3180-18
		CA358A	3206-13
	Signetics	LM358	3180-19
	TI	LM358	3180-20
3580	**Burr-Brown**	**3580J**	★2850
			3176-5
			3176-134
			3200-30
3581	Burr-Brown	3581J	3176-21
			3176-110
			3192-14
3582	Burr-Brown	3582J	3176-42
			3176-107
			3192-13
3583	**Burr-Brown**	**3583**	★2850
			3176-1
			3176-43
			3176-108
			3192-15
3584	**Burr-Brown**	**3584**	★2850
			3176-44
			3176-109
			3192-16
359	National	LM359	3203-22
	Siemens	S359	3219-89
35LS190			
	AMD	AM35LS190M	611-91
360	Amperex	OM360	3171-120
	Cybernetic	CY360	3234-13
			1353-122
			1355-16
	DDC	HSDC-360	3237-128
	National	LM360	3160-3
	Panasonic	AN360	3165-128
	Plessey	SL360	3157-71
3600	Cherry	CS3600	4473-21
	Holt	**HI3600**	★4745
			4468-1
	LSIComp	D3600	589-175
	RCA	**CA3600**	★3601
			592-48
	RCA	CA3600	3158-145
	SMC	KR3600	2667-12
			¶ 260-4
		KR3600-PRO	2667-11
			¶ 260-4
	Telmos	TM3600	4468-51
36000	Mostek	MK36000-4	3785-84
		MK36000-5	3786-6
		MKB36000-83	3785-85
		MKB36000-84	3786-7
	SGS	M36000	3785-92
	SMC	ROM36000	3785-95
3603	National	DS3603	2673-38
			2684-56
3604	Harris	HS3604	3167-127
	National	DS3604	2673-18
			2684-54
	Sprague	UGN-3604M	3234-23
3605	National	DS3605	2684-67
	Sprague	UGN-3605M	3234-24
3606	**Burr-Brown**	**3606**	★2851
			3156-38
	National	DS3606	2684-68
3607	National	DS3607	2684-69
3608	National	DS3608	2684-70
361	Amperex	OM361	3171-121
	MicroPwr	MP361	3157-67
	National	FOR361B	3233-89
		LM361	3159-62
	TeledyneS	361A/C	602-27
		361B/M	602-28
3610	**AMI**	**S3610**	★2813
			3169-109
3611	National	DS3611	2681-111
	Sprague	UDN-3611M	2681-112
		UDS-3611H	2681-114
3612	National	DS3612	2681-150
	Sprague	UDN-3612M	2681-151
		UDS-3612H	2681-153
3613	National	DS3613	2682-54
	Sprague	UDN-3613M	2682-55
		UDS-3613H	2682-57
3614	National	DS3614	2682-20
	Sprague	UDN-3614M	2682-21
		UDS-3614H	2682-23
36143	National	DS36143	2682-147
36144	National	DS36144	2683-9
36147	National	DS36147	2682-152
36149	National	DS36149	614-82
			2683-84
3615	National	DS3615	2679-22
3616	National	DS3616	2679-14
3617	National	DS3617	2679-27
36177	National	DS36177	2682-153
36179	National	DS36179	614-83
			2683-85
3618	National	DS3618	2679-23
362	AD	AD362K	3233-40
		AD362S	3233-41
	MicroPwr	MP362	3157-68
	Panasonic	AN362	3168-139
	Plessey	SL362	3157-72
			¶ 298-4
	TeledyneS	362A/C	602-31
		362B/M	602-32
3620	**AMI**	**S3620**	★2814
			3169-110
3626	Burr-Brown	3626A	3155-64
		3626B	3155-65
		3626C	3155-66
3627	**Burr-Brown**	**3627**	★2851
			3155-107
	SiliconG	SG3627	2679-56
3628	National	DS3628	2683-118
3629	**Burr-Brown**	**3629**	★2851
			3155-67
		3629A	★2851
			3181-39
		3629B	★2851
			3181-36
			(Continued)
3629	**Burr-Brown**	**3629C**	★2851
			3181-37
		3629S	★2851
			3181-38
	National	DS3629	2680-70
	SiliconG	SG3629	2622-27
			2680-63
			3238-105
363	AD	AD363K	3233-6
		AD363S	3233-7
	National	LM363	3155-89
			3184-18
		LM363A	3155-90
			3182-9
	TeledyneS	363A/C	602-35
		363B/M	602-36
3630	AMI	S3630A	3787-27
		S3630B	3786-112
	Burr-Brown	**3630A**	★2851
			3155-68
		3630B	★2851
			3155-69
		3630C	★2851
			3155-70
		3630S	★2851
			3155-71
	Inmos	**IMS3630**	★3981
	National	DS3630	572-56
3631	National	DS3631	2681-107
3632	Intel	3632	3765-122
		3632-1	3765-119
		M3632	3766-1
			3766-2
	National	DS3632	2681-144
3633	National	DS3633	2682-50
3634	National	DS3634	2682-16
3635	SiliconG	SG3635	2679-43
			3234-142
3636	**Burr-Brown**	**3636**	★2851
	Intel	3636B	3764-122
		3636B-1	3764-87
		3636B-2	3764-105
	SiliconG	SG3636	2681-40
3637	SiliconG	SG3637	2679-65
	Unitrode	**UC3637**	★3710
3638	SiliconG	SG3638	2679-59
		SG3638A	2679-60
3639	SiliconG	SG3639	2679-61
		SG3639A	2679-62
364	**AD**	**AD364J**	★2846
			3233-8
		AD364K	★2846
			3233-9
		AD364S	★2846
			3233-10
		AD364T	★2846
			3233-11
3640	SiliconG	SG3640	2679-47
3641	SiliconG	SG3641	2679-48
3643	SiliconG	SG3643	2679-63
		SG3643A	2679-64
3644	National	DS3644	2683-10
3645	National	DS3645	2683-96
3647	National	DS3647	2682-154
3648	National	DS3648	2682-158
3649	National	DS3649	2683-92
365	MCE	MCETCA365	3175-63
	National	LP365	3236-34
3650	**Burr-Brown**	**3650HG**	★2852
			3155-111
	National	DS3650	2674-18
3651	National	DS3651	2684-65
	Signetics	TDA3651	3172-92
		TDA3651A	3172-93
3652	**Burr-Brown**	**3652HG**	★2852
			3155-112
	National	DS3652	2674-21
	Signetics	TDA3652	3172-94
3653	National	DS3653	2684-66
3654	National	DS3654	2680-131
3656	**Burr-Brown**	**3656AG**	★2851
			3155-115
	National	DS3656	2682-135
3658	National	DS3658	2682-138
366	Panasonic	AN366	3168-4

¶ Indicates page number in Application Note Directory.
★ Indicates addition data is provided on the page noted.

Base Number	Source	Device	Page-Line
3660	**Burr-Brown**	**3660**	★2851
			¶ 292-10
	MicroNet	**MN3660**	★3044
			2652-43
3662	**Burr-Brown**	**3662**	★2851
	National	DS3662	2675-43
3666	National	DS3666	2677-1
3667	National	DS3667	2678-22
3668	National	DS3668	2682-137
3669	National	DS3669	2682-139
367	TeledyneS	367A	2672-48
			¶ 256-3
		367A/C	602-45
			¶ 256-3
		367B	2672-52
			¶ 256-3
		367B/M	602-46
			¶ 256-3
		367C	2672-53
			¶ 256-3
		367M	2672-49
			¶ 256-3
3671	National	DS3671	2661-31
3674	National	DS3674	2683-11
3675	National	DS3675	2683-97
3677	National	DS3677	2682-155
3678	National	DS3678	2682-159
3679	National	DS3679	2683-93
368	National	LM368-10	3237-82
		LM368-5	3236-161
		LM368-6	3236-183
	TeledyneS	368A	2672-50
		368A/C	602-47
		368C	2672-51
3680	National	DS3680	2683-3
			3218-58
	TI	DS3680	2683-4
			3218-59
3686	National	DS3686	2680-148
			3218-51
3687	National	DS3687	2681-1
			3218-52
3689	National	DS3689	2674-36
3690	National	DS3690	2674-37
3691	National	DS3691	2668-43
3692	National	DS3692	2671-33
3695	National	DS3695	2678-40
3696	National	DS3696	2678-41
3697	National	DS3697	2678-42
3698	National	DS3698	2678-43
37	**Burr-Brown**	**OPA37A**	★2850
			3181-54
		OPA37B	★2850
			3182-32
		OPA37C	★2850
			3183-31
		OPA37E	★2850
			3181-55
		OPA37F	★2850
			3182-33
		OPA37G	★2850
			3183-32
	Citel	System 37	4351-3
	LinearTech	OP-37A	3181-56
		OP-37C	3183-33
		OP-37E	3181-57
		OP-37G	3183-34
		OP37A	3181-54
		OP37E	3181-55
	MicroPwr	**OP-37**	★3529
			3183-14
	Motorola	OP-37A	3181-58
		OP-37B	3182-34
		OP-37C	3183-35
		OP-37E	3181-59
		OP-37F	3182-35
		OP-37G	3183-36
		OP37A	3181-58
		OP37E	3181-59
	PMI	**OP-37A**	★3566
			3181-41
		OP-37B	★3566
			3182-36
		OP-37C	★3566
			3183-21
		OP-37E	★3566
			(Continued)

Base Number	Source	Device	Page-Line
37	**PMI**	**OP-37E**	3181-42
		OP-37F	★3566
			3182-37
		OP-37G	★3566
			3183-22
	Raytheon	**OP-37A**	★3592
			3181-40
		OP-37B	★3592
			3182-22
		OP-37C	★3592
			3183-15
		OP-37E	★3592
			3184-51
		OP-37F	★3592
			3182-23
		OP-37G	★3592
			3183-16
370	Amperex	OM370	3171-122
	AD	**AD370J**	★2826
			2653-10
		AD370K	★2826
			2653-11
		AD370S	★2826
			2653-12
	HiLevel	DS370	1813-3
	HybridSys	DAC370B-16	2658-11
		DAC370B-18	2659-45
		DAC370C-16	2658-12
		DAC370C-18	2659-46
	MicroNet	**MN370**	★3044
			2653-22
		MN370H	★3044
			2653-23
	MicroPwr	**MP370B-18**	★3046
			2659-47
		MP370C-18	★3046
			2659-48
	National	COP370	1338-95
	Panasonic	AN370	3165-129
	TeledyneS	370A/C	601-48
		370B/M	601-49
3700	**Holt**	**HI3700**	★4745
			4474-7
	Lambda	LAS3700	3229-38
	SiliconG	SG3700	2679-58
37000	Mostek	MK37000-4	3785-101
		MK37000-5	3785-102
		MKB37000-84	3785-86
		MKB37000-85	3786-8
3701	National	ADD3701	2637-46
	Sprague	ULN-3701Z	3165-2
			¶ 288-13
3702	Sprague	ULN-3702Z	3165-3
3703	Sprague	ULN-3703Z	3165-4
3704	Sprague	ULX-3704B	3165-6
3705	National	AM3705C	2623-107
	Siliconix	**SI3705**	★3082
			2623-101
	Sprague	ULN-3705M	3164-121
3706	**Unitrode**	**UC3706**	★3710
3708	Fairchild	3708	2623-108
	Hughes	HNVM3708	3758-49
371	**AD**	**AD371J**	★2826
			2653-13
		AD371K	★2826
			2654-43
		AD371S	★2826
			2654-44
	MicroNet	**MN371**	★3044
			2653-8
		MN371H	★3044
			2653-9
	NEC	uPD371	1345-84
			1346-109
			1352-90
			¶ 278-4
	TeledyneS	371A/C	601-29
			¶ 255-11
		371B/M	601-30
			¶ 255-11
3710	GI	KB3710	3234-108
3711	National	ADC3711	2637-45
			¶ 280-13
			¶ 308-6
3712	Burr-Brown	3712T/R	3233-73
3713	Burr-Brown	3713T/R	3233-74

Base Number	Source	Device	Page-Line
3714	Burr-Brown	3714T	3233-75
			¶ 286-6
3716	Citel	CopyROM 3716	4351-2
3717	MicroSci	TDA3717	3235-15
	Plessey	TDA3717	3235-16
	RIFA	PBL3717	3173-69
	Unitrode	**UC3717**	★3710
372	NEC	uPD372	1353-105
			¶ 278-5
	TeledyneS	372A/C	601-22
			¶ 255-11
		372B/M	601-23
			¶ 255-11
	TI	**TLC372**	★ 541
			★3695
3720	Fujitsu	MB3720	3165-19
3721	RIFA	PBL3721	3155-136
3724	Fairchild	FQ3724	3157-143
	Sprague	TPQ3724	3157-160
3725	Fairchild	FQ3725	3157-144
	Motorola	MPQ3725	3157-150
		MPQ3725A	3157-151
	National	DH3725C	3157-154
	RIFA	PBL3725	3218-67
	Sprague	TPQ3725	3157-161
		TPQ3725A	3157-162
37256	**OKI**	**MSM37256**	★4118
3726	RIFA	PBL3726	3218-68
373	**MicroNet**	**MN373**	★3045
			3238-163
	TeledyneS	373A/C	601-26
		373B/M	601-27
3730	Fujitsu	MB3730	3165-20
3731	Fujitsu	MB3731	3165-21
	SiliconG	SG3731	3173-65
			3235-13
			¶ 307-9
374	MicroNet	MN374	3238-164
	Panasonic	AN374	3164-93
	TeledyneS	374A/C	601-18
	TI	**TLC374**	★ 541
			★3697
375	**MicroNet**	**MN375A**	★3045
			3238-36
	TeledyneS	375A/C	602-18
			3788-44
		375B/M	602-19
			3788-45
3752	DataTrans	DT3752	1963-17
3754	DataTrans	DT3754	1963-12
3759	Fujitsu	MB3759	3230-46
376	Fairchild	uA376C	3229-31
	MicroNet	**MN376**	★3045
			3238-165
	National	LM376	3229-32
	TI	TL376C	3235-19
3760	Fujitsu	MB3760	3230-47
3764	**OKI**	**MSM3764-12**	★4118
			3769-55
		MSM3764-15	★4118
			3769-81
		MSM3764-20	★4118
			3769-107
377	**HybridSys**	**DAC377-18**	★2984
			2659-49
		DAC377B-18	★2984
			2659-50
		DAC377C-18	★2984
			2659-51
	MicroNet	**MN377**	★3045
			3238-166
	MicroPwr	**MP377B-18**	★3046
			2659-52
		MP377C-18	★3046
			2659-53
	National	LM377	3165-74
	Panasonic	AN377	3168-40
378	National	LM378	3165-75
3783	Sprague	ULX-3783M	3165-81
3784	Sprague	ULN-3784B	3165-5
379	**MicroNet**	**MN379**	★3045
			3238-167
	National	LM379	3165-88
	NEC	uPD379	2686-36
			¶ 271-1
			(Continued)

Base Number	Source	Device	Page-Line
379	NEC	uPD379	1344-157
			1346-64
			1346-68
38	**Wintek**	**MCN38**	★2062
380	**AD**	**AD380**	★3353
			3176-6
			3176-85
		AD380J	★3353
			3180-103
		AD380K	★3353
			3180-104
			3188-26
		AD380L	★3353
			3180-105
			3188-27
		AD380S	★3353
			3176-7
			3176-86
			3180-106
			3188-28
	National	FOE380B-1	3233-82
		FOE380B-2	3233-83
		LM380	3164-87
	TeledyneS	380A/C	601-41
			¶ 255-11
			2662-77
		380B/M	601-33
			¶ 255-11
			2662-78
3800	Lambda	LAS3800	3230-48
38000	Mostek	MK38000-20	3787-53
		MK38000-25	3787-66
		MKB38000-84	3787-67
		MKB38000-85	3787-79
3801	Mostek	MK3801	1354-44
3804	Sprague	ULX-3804A	3168-22
3805	Mostek	MK3805	1341-56
			¶ 265-13
			¶ 321-6
3806	Mostek	MK3806	1341-57
3807	Mostek	MK3807	1341-24
			¶ 265-13
			¶ 277-6
3809	Sprague	ULN-3809A	3168-158
381	**AD**	**AD381J**	★3353
			3188-3
		AD381K	★3353
			3185-43
		AD381L	★3353
			3184-52
		AD381S	★3353
			3187-54
		AD381T	★3353
			3185-41
	Harris	**HI381**	★2877
			2615-32
	National	LM381	3165-161
	Siliconix	**DG381A**	★3077
			2615-45
		DG381AA	★3077
			2615-46
		DG381AB	★3077
			2615-47
		DG381AC	★3077
			2615-48
		DG381B	★3077
			2615-49
		DG381C	★3077
			2615-50
	TeledyneS	381A/C	601-31
			2662-79
		381B/M	601-32
			2662-80
3810	**Signetics**	**TDA3810**	★3613
			3172-13
	Sprague	ULN-3810A	3168-159
3812	Sprague	ULN-3812A	3168-160
38128	**OKI**	**MSM38128**	★4118
3814	Fairchild	3814	641-55
3815	Fairchild	3815	640-51
3816	Fairchild	3816	641-111
3819	**Harris**	**HS3819**	★4658
			3173-1
	Harris	HS3819	1353-14
382	**AD**	**AD382**	★3353
			3176-8
			(Continued)

Arranged alphanumerically from left to right.

Base Number	Source	Device	Page-Line
382	**AD**	**AD382J**	★3353
			3188-2
		AD382K	★3353
			3185-42
		AD382S	★3353
			3176-9
			3189-53
		AD382T	★3353
			3185-40
	National	LM382	3165-162
	TeledyneS	382A/C	601-35
			2662-84
		382B/M	601-36
			2662-85
3820	Lambda	LAS3820	3230-49
	National	LM3820	3167-123
3821	SiliconG	SG3821	3157-29
3822	SiliconG	SG3822	3157-42
3823	SiliconG	SG3823	3157-34
383	National	LM383	3164-147
		LM383A	3164-148
	TeledyneS	383A/C	601-37
			2662-8
		383B/M	601-38
			2662-9
3834	**Unitrode**	**UC3834**	★3710
			3234-133
3838	Sprague	ULN-3838A	3167-118
384	**Harris**	**HI384**	★2877
			2619-114
	National	LM384	3164-149
	Siliconix	**DG384AA**	★3079
			2619-93
		DG384AB	★3079
			2619-94
		DG384AC	★3079
			2619-95
		DG384B	★3079
			2620-1
		DG384C	★3079
			2620-2
3840	Lambda	LAS3840	3230-50
			¶ 311-13
			¶ 312-5
	Sprague	ULX-3840A	3168-14
	Unitrode	UC3840	3231-69
3842	Unitrode	UC3842	3231-70
3846	Fairchild	F3846	2686-34
	Unitrode	UC3846	3232-127
3847	Unitrode	UC3847	3232-128
385	LinearTech	LM385-1	3236-58
		LM385-2	3236-99
	Motorola	**LM385-1**	★3535
			3236-62
		LM385-2	★3535
			3236-106
		LM385B-1	★3535
			3236-63
		LM385B-2	★3535
			3236-107
	National	LM385	3236-66
		LM385-1	3236-79
		LM385-2	3236-123
3850	Fairchild	F3850	1347-93
		F3850M	1347-94
	MicroNet	**MN3850**	★3044
			2652-26
		MN3850H	★3044
			2652-27
	Mostek	MK3850	1347-96
			1273-20
3851	Fairchild	3851	1347-107
		3851A	1347-108
		3851M	1347-109
	Mostek	MK3851	1347-115
	SiliconG	SG3851	2679-129
			3158-52
38510	Hitachi	HD38510	3166-27
38513	Hitachi	HD38513	3166-28
3852	Fairchild	F3852	1347-100
	Mostek	MK3852	1347-101
	SiliconG	SG3852	2679-149
			3158-53
3853	Fairchild	3853	1347-116
		3853M	1347-117
	Mostek	MK3853	1347-118
			(Continued)

Base Number	Source	Device	Page-Line
3853	SiliconG	SG3853	2679-105
			3158-54
3854	Fairchild	3854	1347-98
	Mostek	MK3854	1347-99
38546	Hitachi	HD38546	3166-29
38550	Hitachi	HD38550	3166-30
3856	Fairchild	3856	1347-110
		3856A	1347-111
38560	Hitachi	HD38560	3166-31
3857	Fairchild	3857	1347-112
38570	Hitachi	HD38570	3166-32
38580	Hitachi	HD38580	3166-33
38585	Hitachi	HD38585	3166-34
3859	Sprague	ULN-3859A	3168-104
386	National	LM386	3164-88
3860	**AD**	**AD3860K**	★2827
			2652-31
		AD3860S	★2827
			2652-32
	HybridSys	HS3860B	2652-18
		HS3860C	2652-19
	MicroNet	**MN3860**	★3044
			2652-28
		MN3860H	★3044
			2652-29
3861	Fairchild	3861	1347-102
		3861M	1347-103
	Mostek	MK3861	1347-105
3864	Fairchild	F3864	1342-105
387	**Fairchild**	**F387X**	★1454
	Harris	**HI387**	★2877
			2617-113
	National	LM387	3165-163
	Siliconix	**DG387AA**	★3078
			2617-120
		DG387AB	★3078
			2617-121
		DG387AC	★3078
			2617-122
3870	**Fairchild**	**F3870**	★1456
			1341-39
			¶ 260-7
	Fairchild	F3870	1267-15
	Fairchild	**F3870-PEP**	★1456
			1965-7
			¶ 260-7
	Mostek	MK3870	1273-21
		MK3870/10	1341-43
		MK3870/12	1341-33
		MK3870/20	1341-44
		MK3870/22	1341-34
		MK3870/30	1341-45
		MK3870/32	1341-35
		MK3870/40	1341-46
		MK3870/42	1341-36
	Motorola	MC3870	1341-37
			1273-31
	SGS	M3870	1341-47
	SMC	MPU3870	1341-48
3871	Fairchild	3871	1347-104
	Mostek	MK3871	1347-106
3872	Fairchild	F3872	1341-29
			1267-16
	SGS	M3872	1341-38
3873	Mostek	MK3873	1273-22
		MK3873/10	1341-49
		MK3873/12	1341-51
		MK3873/20	1341-50
		MK3873/22	1341-52
3875	Mostek	MK3875	1273-23
		MK3875/22	1341-53
		MK3875/42	1341-54
3876	Fairchild	F3876	1341-30
			1267-17
3878	Fairchild	F3878	1341-40
			1267-18
388	National	LM388	3164-89
	TI	LM388-3	3164-125
3880	Mostek	MK3880	1348-48
			1273-24
3881	Mostek	MK3881	1348-84
3882	Mostek	MK3882	1348-64
3883	Mostek	MK3883	1348-78
3884	Mostek	MK3884	1348-92
			¶ 266-1
			¶ 272-8

Base Number	Source	Device	Page-Line
3885	KineticSys	3885-ZIA	1963-25
	Mostek	MK3885	1348-93
			¶ 266-1
3886	Mostek	MK3886	1348-108
	SiliconG	SG3886	3157-30
3887	Mostek	MK3887	1348-94
			¶ 266-1
3889	Sprague	ULN-3889A	3168-95
389	National	LM389	3155-12
			3164-90
			¶ 302-4
3891	Mostek	MK3891	1354-42
38980	Hitachi	HD38980	3166-75
38991	Hitachi	HD38991C	3166-76
38C70	Fairchild	F38C70	1341-41
			1267-19
38E70	**Fairchild**	**F38E70**	★1456
			1341-25
			1341-42
	Fairchild	F38E70	1267-20
38L72	Fairchild	F38L72	1341-31
			1267-21
38L76	Fairchild	F38L76	1341-32
			1267-22
38P70	Mostek	MK38P70	1341-28
		MK38P70/02	1341-26
38P73	Mostek	MK38P73/02	1341-27
38T56	Fairchild	38T56	1347-113
38T57	Fairchild	38T57	1347-114
39	Lambda	LAS39U	3228-26
390	**AD**	**AD390J**	★2816
			★2827
			2653-24
		AD390K	★2816
			★2827
			2652-35
		AD390S	★2816
			★2827
			2653-25
	Harris	**HI390**	★2877
			2618-103
	National	LM390	3164-91
	Siliconix	**DG390AA**	★3078
			2618-110
		DG390AB	★3078
			2618-111
		DG390AC	★3078
			2618-112
	TeledyneS	390	601-66
		390A/C	2682-73
3900	**Fujitsu**	**C3900**	★4640
			4467-44
		C3900H	★4639
			★4640
			4464-17
	Holt	**HI3900**	★4745
			4468-2
	National	LM3900	3180-93
	Raytheon	LM3900	3180-95
	TI	LM3900	3180-97
3901	**Unitrode**	**UC3901**	★3710
			3235-157
3903	**Unitrode**	**UC3903**	★3710
			3235-158
3905	Lambda	LAS3905	3222-21
		LAS3905K	3222-22
	National	LM3905	3220-16
3909	National	LM3909	3233-95
391	HybridSys	DAC391B-12	2649-7
		DAC391C-12	2649-8
	National	LM391	3164-74
	TeledyneS	391	601-65
		391A/C	2681-26
3911	National	LM3911	3238-140
	NEC	uPC3911	3238-141
			¶ 315-5
3914	National	LM3914	2661-2
			¶ 289-2
	OKI	**MSM3914A**	★4118
			2667-15
	Sprague	ULN-3914A	3171-2
3915	National	LM3915	2661-3
3916	National	LM3916	2661-28
392	HybridSys	DAC392B-12	2650-40
		DAC392C-12	2650-41
	National	LM392	3156-6
			(Continued)

Base Number	Source	Device	Page-Line
392	National	LM392	3207-21
	TeledyneS	392	601-71
		392A/C	2681-60
3924	National	LM3924	3156-3
393	Fairchild	uA393	3161-43
		uA393A	3160-56
	National	LM393	3161-45
		LM393A	3160-58
	NEC	uPC393	3161-51
	Signetics	LM393A	3161-48
	TeledyneS	393	601-119
		393A/C	2681-62
	TI	LM393	3161-50
39301	TI	SN39301	612-89
39308	TI	SN39308	625-67
39309	TI	SN39309	627-138
3931	National	LM3931-5	3221-18
39310	TI	SN39310	610-37
39311	TI	SN39311	613-121
39312	TI	SN39312	629-137
39316	TI	SN39316	608-5
39318	TI	SN39318	639-39
394	National	LM394	3157-70
	TeledyneS	394	601-122
		394A/C	2681-61
395	National	LM395	3232-95
	TeledyneS	395	601-72
		395A/C	2682-74
3954	MicroPwr	MP3954	3157-77
		MP3954A	3157-78
3955	MicroPwr	MP3955	3157-79
3956	MicroPwr	MP3956	3157-80
3958	MicroPwr	MP3958	3157-81
396	Micropac	MLM396-05	3222-26
		MLM396-12	3224-10
		MLM396-15	3224-109
	National	LM396	3228-28
	TeledyneS	396AC	602-30
397	HybridSys	DAC397B-12	2649-9
		DAC397C-12	2649-10
398	AMD	LF398	3237-160
	Fairchild	**uAF398**	3238-12
	National	COP398	1338-93
		LF398	3238-43
		LF398A	3238-44
	Signetics	LF398	3238-68
399	LinearTech	LM399	3237-23
	National	COP399	1338-97
		LM399	3237-18
			¶ 315-6
		LM399A	3237-20
			¶ 315-6
			¶ 315-6
3999	National	LM3999	3237-19
3D5	Cromemco	CS-3D5E	1809-17
3G01	Barvon	BC3G01	4473-4
3G02	Barvon	BC3G02	4473-3
4	**AMI**	**UA-4**	★4619
			4468-8
	Burr-Brown	**MPC4D**	★2850
			2623-1
	Cromemco	**4PIO**	★2028
	Ferranti	ZNPCM4	3216-65
	Intech	RGBDAC4T	2638-5
			1353-28
	Mostek	MDX-CPU4	1955-35
	National	**MF4**	★3541
			3232-25
	NEC	uCOM-4	1261-9
	Octagon	SYS-4B	1965-6
	Rockwell	PPS4/1	1817-4
	Sharp	SM-4	1338-129
	STC	MSIV-4	4475-30
	TeledyneC	CDA4A	2617-105
		CLD4	2662-119
40	Ferranti	ULA40RA	4465-32
		ULA40RB	4468-44
			4469-13
		ULA40RC	4470-31
			4471-3
		ULA40RD	4471-47
			4472-11
	IntCirSys	IMC-40A	4474-19
		IMC-40B	4474-11
	Interdesign	ULA40RA	4465-33
		ULA40RB	4468-45
			(Continued)

¶ Indicates page number in Application Note Directory.
★ Indicates addition data is provided on the page noted.

Base Number	Source	Device	Page-Line
40	Interdesign	ULA40RB	4469-14
		ULA40RC	4470-32
			4471-4
		ULA40RD	4471-48
			4472-12
	MCE	MCEA40AS	4474-44
		MCEA40BS	4475-9
		MCEA40D	4474-42
		MCEA40DS	4474-43
		MCEP40A	4475-8
	MicroTech	SGA40	4462-12
	Rockwell	A65/40-1000	1959-3
400	AnalogSys	MA400	3200-34
	Elind	RP400-S	4353-9
	Exar	**XR400**	★ **3386**
			4460-2
	IntCirSys	IMC-400	4474-10
	MicroTech	SG400	4465-39
	Motorola	HDS-400	1815-6
	Motorola	**MVME400**	★ **2044**
	National	LF400	3201-3
		MCA400ALS	4462-16
	Sprague	UHC/D-400	613-153
			2683-42
		UHP-400	613-157
			2683-46
4000	**AMI**	**GA4000D**	★ **4619**
			4462-4
	CalDevices	CDI4000	4470-9
	Cherry	CS4000	4473-22
	Fairchild	**FGC4000**	★ **4634**
			4461-12
	HyComp	DA4000	2655-17
		HC4000	2649-3
		HC4000-883	2649-4
	Motorola	MC4000	628-31
			2684-1
	Motorola	**MC4000Series**	★ **820**
	National	CD4000C	584-122
		CD4000M	584-123
	NCM	4000 Series	4478-2
	Plessey	CLA4000	4462-22
	Plessey	**SCD4000**	★ **4815**
			4460-17
	RCA	**CD4000A**	★ **837**
			584-124
			¶ 252-14
		CD4000AE	★ **837**
			584-125
		CD4000B	★ **837**
			584-126
		CD4000BE	★ **837**
			584-127
		CD4000UB	★ **837**
			584-128
		CD4000UBE	★ **837**
			584-129
	SGS	HCC4000B	584-130
		HCF4000B	584-131
	Signetics	**HEF4000B**	★ **864**
			★ **898**
			584-132
		HEF4000BD	★ **864**
			584-133
	SSS	883/4000B	584-134
		SCL4000B	584-135
	Solitron	CM4000A	584-136
		CM4000AE	584-137
	Toshiba	TC4000B	584-138
40000	ZyMOS	Zy40000	4479-3
4001	Fairchild	F4001BC	585-31
		F4001BM	585-32
	Motorola	MC4001	612-34
		MHQ4001A	3157-145
	National	CD4001A	585-40
		CD4001BC	585-41
		CD4001BM	585-42
	NCM	4001Z	3171-130
	Panasonic	**MN4001B**	★ **828**
			★ **834**
			585-48
	RCA	**CD4001A**	★ **837**
			585-50
			¶ 250-4
			¶ 252-14
		CD4001AE	★ **837**
			(Continued)

Base Number	Source	Device	Page-Line
4001	**RCA**	**CD4001AE**	**585-51**
			¶ 250-4
		CD4001B	★ **837**
			585-52
			¶ 250-4
		CD4001BE	★ **837**
			585-53
			¶ 250-4
		CD4001UB	★ **837**
			585-54
			¶ 250-4
		CD4001UBE	★ **837**
			585-55
			¶ 250-4
	Sanyo	LC4001B	585-60
	SGS	HCC4001B	585-63
		HCF4001B	585-64
	Signetics	**HEF4001B**	★ **864**
			★ **898**
			585-67
		HEF4001BD	★ **864**
			585-68
		HEF4001UB	★ **864**
			★ **864**
			★ **898**
			585-69
	SSS	883/4001B	585-70
		883/4001UB	585-71
		SCL4001B	585-72
		SCL4001UB	585-73
	Solitron	CM4001A	585-74
		CM4001AE	585-75
		CM4001B	585-76
		CM4001BE	585-77
	Thomson-CSF		
		UAA4001	3231-16
			¶ 312-4
			¶ 312-15
	Toshiba	TC4001B	585-80
		TC4001UB	585-81
40014	Fairchild	F40014AM	593-122
		F40014BC	593-123
4002	Fairchild	F4002BC	584-139
		F4002BM	584-140
	Motorola	MHQ4002A	3157-146
	National	CD4002A	584-148
		CD4002BC	584-149
		CD4002BM	584-150
	NCM	4002Z	3171-106
	Panasonic	**MN4002B**	★ **828**
			★ **834**
			584-153
	RCA	**CD4002A**	★ **837**
			584-155
		CD4002AE	★ **837**
			584-156
		CD4002B	★ **837**
			584-157
		CD4002BE	★ **837**
			584-158
		CD4002UB	★ **837**
			584-159
		CD4002UBE	★ **837**
			584-160
	SGS	HCC4002B	584-166
		HCF4002B	584-167
	Signetics	**HEF4002B**	★ **864**
			★ **898**
			584-170
		HEF4002BD	★ **864**
			584-171
	SSS	883/4002B	584-172
		SCL4002B	584-173
	Solitron	CM4002A	584-174
		CM4002AE	584-175
	Thomson-CSF		
		UAA4002	2679-41
			¶ 312-6
			3233-69
	Toshiba	TC4002B	584-176
4003	**AMI**	**S4003**	★ **705**
			3166-6
			3166-122
	Burr-Brown	**4003**	★ **2852**
	Motorola	MPQ4003	3157-152
			(Continued)

Base Number	Source	Device	Page-Line
4003	NCM	4003Z	3171-107
	Thomson-CSF		
		UAA4003	3231-17
4004	Motorola	MC4004	626-171
			3770-65
		MPQ4004	3157-153
	NCM	4004Z	3172-52
			3173-141
	Thomson-CSF		
		UAA4004	2679-34
4005	Motorola	MC4005	626-172
			3770-66
4006	Fairchild	F4006BC	591-161
			3789-97
		F4006BM	591-162
		F4006M	3789-101
	Motorola	MC4006	612-21
	National	CD4006A	591-166
			3789-102
		CD4006BC	591-167
		CD4006BM	591-168
	RCA	**CD4006A**	★ **838**
			591-169
		CD4006AE	★ **838**
			591-170
		CD4006B	★ **838**
			591-171
		CD4006BE	★ **838**
			591-172
	RCA	CD4006BE	3789-98
	SGS	HCC4006B	591-173
		HCF4006B	591-174
	Signetics	**HEF4006B**	★ **864**
			★ **898**
			591-175
		HEF4006BD	★ **864**
			591-176
	SSS	883/4006B	591-177
			3789-103
		SCL4006B	591-178
			3789-104
	Solitron	CM4006A	591-179
			3789-99
		CM4006AD	591-180
			3789-96
		CM4006AE	591-181
			3789-100
	Thomson-CSF		
		UAA4006	3231-18
			¶ 311-14
	Toshiba	TC4006B	591-182
40061	RCA	CD40061	587-152
		CD40061A	587-153
			3772-58
		CO40061	3772-61
4007	Fairchild	F4007UBC	573-144
		F4007UBM	573-145
	Mostek	MK4007	3772-62
		MK4007-4	3772-63
	Motorola	MC4007	612-116
	National	CD4007C	573-149
		CD4007M	573-150
	Panasonic	MN4007UB	573-151
	RCA	**CD4007A**	★ **837**
			573-152
			¶ 282-5
		CD4007AE	★ **837**
			573-153
		CD4007UB	★ **837**
			573-154
		CD4007UBE	★ **837**
			573-155
	SGS	HCC4007UB	573-156
		HCF4007UB	573-157
	Signetics	**HEF4007UB**	★ **864**
			★ **898**
			573-158
	Signetics	HEF4007UBD	573-159
	SSS	883/4007UB	573-160
		SCL4007UB	573-161
	Solitron	CM4007A	573-162
		CM4007AE	573-163
	Thomson-CSF		
		UAA4007	3238-77
	Toshiba	TC4007UB	573-164

Base Number	Source	Device	Page-Line
4008	Fairchild	F4008BC	571-33
		F4008BM	571-34
	Motorola	MC4008	639-5
	National	CD4008BC	571-40
		CD4008BM	571-41
	RCA	**CD4008A**	★ **840**
			571-44
			¶ 250-4
		CD4008AE	★ **840**
			571-45
			¶ 250-4
		CD4008B	★ **840**
			571-46
			¶ 250-4
		CD4008BE	★ **840**
			571-47
			¶ 250-4
	SGS	HCC4008B	571-49
		HCF4008B	571-50
	Signetics	**HEF4008B**	★ **864**
			★ **898**
			571-51
	SSS	883/4008B	571-52
		SCL4008B	571-53
	Solitron	CM4008A	571-54
		CM4008AE	571-55
	Thomson-CSF		
		UAA4008	3238-78
	Toshiba	TC4008B	571-56
40085	Fairchild	F40085BC	571-104
		F40085BM	571-105
4009	National	CD4009AC	572-74
		CD4009AM	572-75
	RCA	**CD4009A**	★ **837**
			572-76
			¶ 251-8
		CD4009AE	★ **837**
			572-77
			¶ 251-8
		CD4009UB	★ **837**
			572-78
			¶ 251-8
		CD4009UBE	★ **837**
			572-79
			¶ 251-8
	SSS	883/4009UB	572-80
		SCL4009UB	572-81
	Solitron	CM4009A	572-82
		CM4009AE	572-83
	Toshiba	TC4009UB	572-84
40097	Fairchild	F40097BC	573-37
		F40097BM	573-38
	Signetics	**HEF40097B**	★ **865**
			★ **899**
			573-76
		HEF40097BD	★ **865**
			573-77
40098	Fairchild	F40098BC	573-174
		F40098BM	573-175
	Signetics	**HEF40098B**	★ **865**
			★ **899**
			573-180
		HEF40098BD	★ **865**
			573-181
401	Cherry	CS401	3234-111
	Motorola	MHW401	3156-46
	Telefunken	U401	3169-130
4010	Hughes	HCTR4010	577-61
	Motorola	MC4010	637-124
	National	CD4010A	572-119
	RCA	**CD4010A**	★ **837**
			572-120
			¶ 251-8
		CD4010AE	★ **837**
			572-121
			¶ 251-8
		CD4010B	★ **837**
			572-122
			¶ 251-8
		CD4010BE	★ **837**
			572-123
			¶ 251-8
	SSS	883/4010B	572-124
		SCL4010B	572-125
	Solitron	CM4010A	572-126
			(Continued)

Arranged alphanumerically from left to right.

Base Number	Source	Device	Page-Line
4010	Solitron	CM4010AE	572-127
	Toshiba	TC4010B	572-128
40100	**RCA**	**CD40100B**	★ **838**
			591-185
		CD40100BE	★ **838**
			591-186
	SGS	HCC40100B	591-187
		HCF40100B	591-188
40101	**RCA**	**CD40101B**	★ **840**
			592-81
		CD40101BE	★ **840**
			592-82
	SGS	HCC40101B	592-83
		HCF40101B	592-84
40102	**RCA**	**CD40102B**	★ **839**
			576-184
		CD40102BE	★ **839**
			576-185
	SGS	HCC40102B	576-190
		HCF40102B	576-191
	Toshiba	TC40102B	576-192
40103	**RCA**	**CD40103B**	★ **839**
			574-174
		CD40103BE	★ **839**
			574-175
	SGS	HCC40103B	574-176
		HCF40103B	574-177
	Toshiba	TC40103B	574-178
40104	**RCA**	**CD40104B**	★ **838**
			590-157
	SGS	HCC40104B	590-163
		HCF40104B	590-165
	Toshiba	TC40104B	591-9
40105	**RCA**	**CD40105B**	★ **838**
			587-93
	RCA	CD40105B	3757-1
	RCA	**CD40105BE**	★ **838**
			587-94
	RCA	CD40105BE	3757-2
	SGS	HCC40105B	587-95
		HCF40105B	587-96
40106	National	CD40106BC	593-129
		CD40106BM	593-130
	RCA	**CD40106B**	★ **837**
			593-138
		CD40106BE	★ **837**
			593-139
	SGS	HCC40106B	593-146
		HCF40106B	593-147
	Signetics	**HEF40106**	★ **865**
			593-150
		HEF40106B	★ **865**
			★ **899**
			593-151
		HEF40106BD	★ **865**
			593-152
40107	**RCA**	**CD40107B**	★ **837**
			582-161
		CD40107BE	★ **837**
			582-162
			¶ 251-5
	SGS	HCC40107B	582-163
		HCF40107B	582-164
	Toshiba	TC40107	582-165
40108	**RCA**	**CD40108B**	★ **838**
			★ **840**
			587-100
		CD40108BE	★ **838**
			★ **840**
			587-101
40109	**RCA**	**CD40109B**	★ **837**
			592-26
		CD40109BE	★ **837**
			592-27
	SGS	HCC40109B	592-28
		HCF40109B	592-29
4011	Fairchild	F4011BC	583-69
		F4011BM	583-70
	National	CD4011AC	583-80
		CD4011AM	583-81
		CD4011BC	583-82
		CD4011BM	583-83
	Panasonic	**MN4011B**	★ **828**
			★ **834**
			583-89
	RCA	**CD4011A**	★ **837**
			(Continued)

Base Number	Source	Device	Page-Line
4011	**RCA**	**CD4011A**	**583-90**
			¶ 250-4
		CD4011AE	★ **837**
			583-91
			¶ 250-4
		CD4011B	★ **837**
			583-92
			¶ 250-4
		CD4011BE	★ **837**
			583-93
			¶ 250-4
	RCA	CD4011BE	3771-48
	RCA	**CD4011UB**	★ **837**
			583-94
			¶ 250-4
		CD4011UBE	★ **837**
			583-95
			¶ 250-4
	Sanyo	LC4011B	583-101
	SGS	HCC4011B	583-104
		HCF4011B	583-105
	Signetics	**HEF4011B**	★ **864**
			★ **898**
			583-108
		HEF4011UB	★ **864**
			★ **864**
			★ **898**
	SSS	883/4011B	583-110
		883/4011UB	583-111
		SCL4011B	583-112
		SCL4011UB	583-113
	Solitron	CM4011A	583-114
		CM4011AE	583-115
		CM4011B	583-116
		CM4011BE	583-117
	Toshiba	TC4011B	583-120
		TC4011UB	583-121
40110	**RCA**	**CD40110B**	★ **839**
			577-7
		CD40110BE	★ **839**
			577-8
40114	RCA	CD40114B	587-133
			3771-47
		CD40114BE	587-134
40115	**RCA**	**CD40115**	★ **837**
40116	**RCA**	**CD40116**	★ **837**
			592-36
40117	**RCA**	**CD40117B**	★ **840**
			593-36
4012	Fairchild	F4012BC	582-170
		F4012BM	582-171
	Motorola	MC4012	631-86
			3789-17
	National	CD4012A	582-179
		CD4012BC	582-180
		CD4012BM	582-181
	Panasonic	**MN4012B**	★ **828**
			★ **834**
			582-184
	RCA	**CD4012A**	★ **837**
			582-186
		CD4012AE	★ **837**
			582-187
		CD4012B	★ **837**
			582-188
		CD4012BE	★ **837**
			582-189
		CD4012UB	★ **837**
			582-190
		CD4012UBE	★ **837**
			582-191
	SGS	HCC4012B	582-198
		HCF4012B	582-199
	Signetics	**HEF4012B**	★ **864**
			★ **898**
			583-3
		HEF4012BD	★ **864**
			583-4
	SSS	883/4012B	583-5
		SCL4012B	583-6
	Solitron	CM4012A	583-7
		CM4012AE	583-8
	Toshiba	TC4012B	583-11
4013	Fairchild	F4013BC	580-43
		F4013BM	580-44
			(Continued)

Base Number	Source	Device	Page-Line
4013	Motorola	MHQ4013	3157-147
	National	CD4013BC	580-50
		CD4013BM	580-51
	Panasonic	**MN4013B**	★ **828**
			★ **834**
			580-57
	RCA	**CD4013A**	★ **838**
			580-59
			¶ 250-4
		CD4013AE	★ **838**
			580-60
			¶ 250-4
		CD4013B	★ **838**
			580-61
			¶ 250-4
		CD4013BE	★ **838**
			580-62
			¶ 250-4
	Sanyo	LC4013B	580-67
	SGS	HCC4013B	580-70
		HCF4013B	580-71
	Signetics	**HEF4013B**	★ **864**
			★ **898**
			580-74
		HEF4013BD	★ **864**
			580-75
	SSS	883/4013B	580-76
		SCL4013B	580-77
	Solitron	CM4013A	580-78
		CM4013AE	580-79
		CM4013B	580-80
		CM4013BE	580-81
	Toshiba	TC4013B	580-84
4014	Fairchild	F4014BC	591-124
			3790-53
		F4014BM	591-125
			3790-65
	Motorola	MHQ4014	3157-148
	National	CD4014A	591-131
			3790-57
		CD4014BC	591-132
		CD4014BM	591-133
	RCA	**CD4014A**	★ **838**
			591-134
		CD4014AE	★ **838**
			591-135
		CD4014B	★ **838**
			591-136
	RCA	CD4014B	3790-69
	RCA	**CD4014BE**	★ **838**
			591-137
	RCA	CD4014BE	3790-59
	SGS	HCC4014B	591-138
		HCF4014B	591-139
	Signetics	**HEF4014B**	★ **864**
			★ **898**
			591-140
		HEF4014BD	★ **864**
			591-141
	SSS	883/4014B	591-142
			3790-71
		SCL4014B	591-143
			3790-61
	Solitron	CM4014A	591-144
			3790-73
		CM4014AE	591-145
	Toshiba	TC4014B	591-146
40147	**RCA**	**CD40147B**	★ **837**
			595-22
		CD40147BE	★ **837**
			595-23
4015	Fairchild	F4015BC	590-49
			3789-70
		F4015BM	590-50
			3789-75
	Motorola	MC4015	615-35
	National	CD4015A	3789-73
		CD4015AC	590-54
		CD4015BC	590-55
		CD4015BM	590-56
	Panasonic	**MN4015B**	★ **828**
			590-57
	RCA	**CD4015A**	★ **838**
			590-58
		CD4015AE	★ **838**
			590-59
			(Continued)

Base Number	Source	Device	Page-Line
4015	**RCA**	**CD4015B**	★ **838**
			590-60
	RCA	CD4015B	3789-76
	RCA	**CD4015BE**	★ **838**
			590-61
	RCA	CD4015BE	3789-74
	SGS	HCC4015B	590-66
		HCF4015B	590-67
	Signetics	**HEF4015B**	★ **864**
			★ **898**
			590-70
		HEF4015BD	★ **864**
			590-71
	SSS	883/4015B	590-72
			3789-77
		SCL4015B	590-73
			3789-78
	Solitron	CM4015A	590-74
			3789-69
		CM4015AE	590-75
			3789-68
	Toshiba	TC4015B	590-76
4016	Fairchild	F4016C	2617-56
		F4016M	2617-57
	Motorola	MC4016	611-143
			¶ 258-16
			¶ 310-5
	National	CD4016BC	2617-64
		CD4016BM	2617-65
	NEC	**μPD4016-1**	★ **4088**
			3779-24
		μPD4016-2	★ **4088**
			3778-128
		μPD4016-3	★ **4088**
			3778-78
	Panasonic	**MN4016B**	★ **828**
			★ **834**
			2617-66
	RCA	**CD4016A**	★ **839**
			★ **840**
			2617-67
			¶ 287-8
		CD4016AE	★ **839**
			★ **840**
			2617-68
		CD4016B	★ **839**
			★ **840**
			2617-69
		CD4016BE	★ **839**
			★ **840**
			2617-70
	SGS	HCC4016B	2617-71
		HCF4016B	2617-72
	Signetics	**HEF4016**	★ **864**
			2617-73
		HEF4016B	★ **898**
	SSS	883/4016B	2617-51
		SCL4016B	2617-52
	Solitron	CM4016A	2617-53
			2617-74
		CM4016AE	2617-54
			2617-75
	TI	TMS4016-12	3778-40
		TMS4016-20	3778-135
		TMS4016-25	3779-25
	Toshiba	TC4016B	2617-55
40160	Fairchild	F40160BC	576-96
		F40160BM	576-97
	National	CD40160BC	576-103
		CD40160BM	576-104
	RCA	**CD40160B**	★ **839**
			576-110
		CD40160BE	★ **839**
			576-111
	SGS	HCC40160B	576-118
		HCF40160B	576-119
	Signetics	**HEF40160B**	★ **865**
			★ **899**
			576-120
		HEF40160BD	★ **865**
			576-121
	Toshiba	TC40160B	576-126
40161	Fairchild	F40161BC	574-79
		F40161BM	574-80
	National	CD40161BC	574-86
		CD40161BM	574-87
			(Continued)

¶ Indicates page number in Application Note Directory.
★ Indicates addition data is provided on the page noted.

Integrated Circuits Magazine
The magazine for the engineering design strategist*

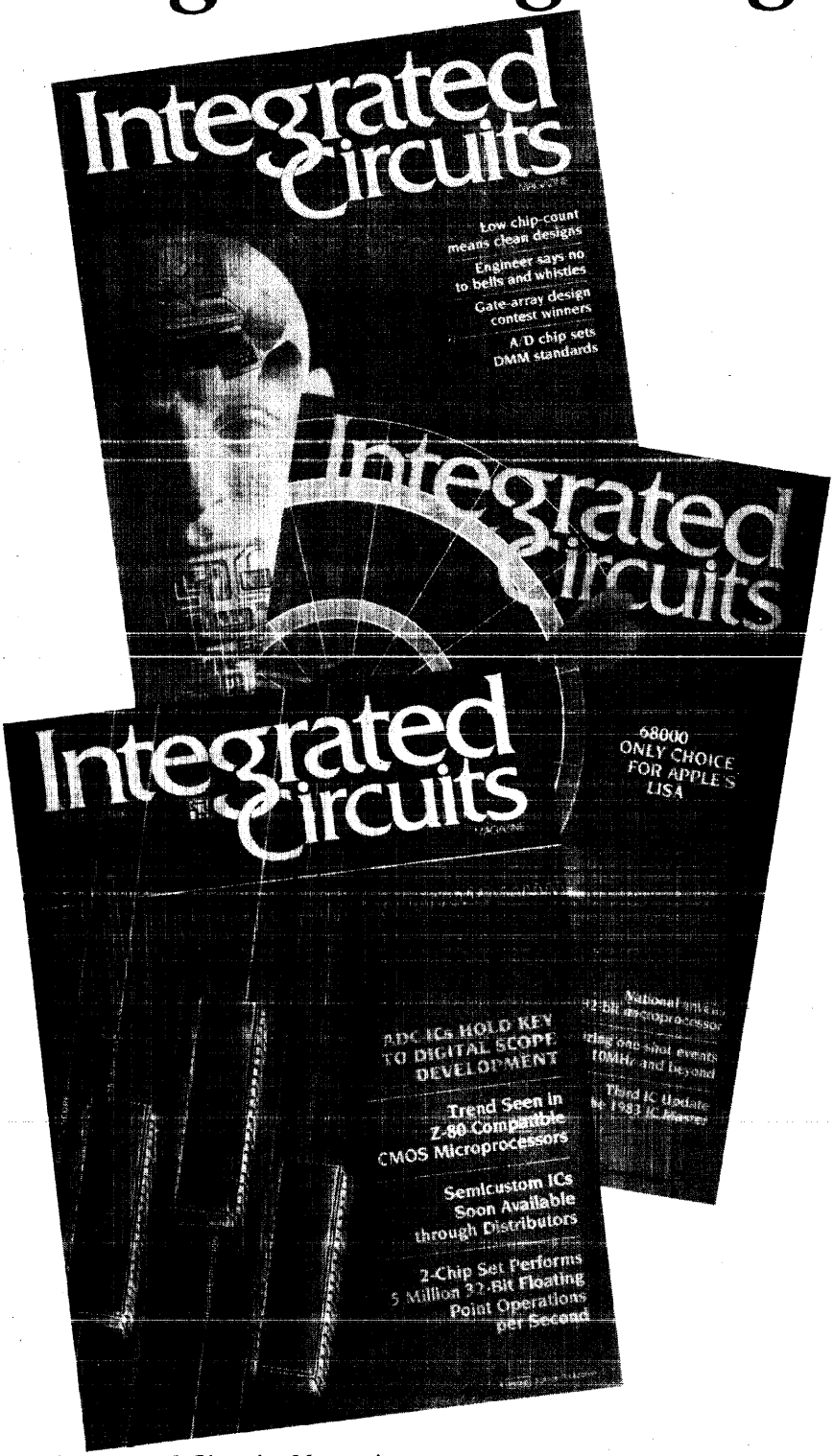

Integrated Circuits Magazine
Circulation Department
645 Stewart Ave.
Garden City, NY 11530
(516) 222-2500
TWX: 510-222-1673

Integrated Circuits Magazine is the only publication written for senior design engineers and engineering managers who specialize in the specifying and use of ICs and related components in the design of instruments, equipment and systems.

It is unique in that it concentrates on reporting *from the viewpoint of the user.*

Each issue of *Integrated Circuits Magazine* includes staff-written interviews with leading designers at major IC customers, as well as articles written by IC users themselves.

Regular features include: IC User Feedback Reports, Semicustom Design Techniques, IC Design Problems and Solutions. What's New in ICs, and much more.

To receive *Integrated Circuits Magazine* absolutely FREE† simply give us your authorization right now! Just fill out, sign, date and return the subscription card located inside the back cover of Volume I.

Card missing? Additional subscription cards available from publisher upon request.

Integrated Circuits Magazine is designed for *YOU.*

**Designers who must keep pace with contemporary engineering design techniques, practices and trends, and how they affect the selection and application of integrated circuits, microcomputers, boards, and systems.*

†Integrated Circuits Magazine is made available on a complimentary basis to those qualified recipients within the United States only.

Canadian and Foreign Subscriptions are available, prepaid by check or money order payable in United States currency, at the following rates: $35.00 per year Canadian/Foreign; $55.00 per year Foreign via Air Mail; $18.00 per year non-qualified Domestic United States.

Don't miss the Sections on Semicustom ICs

Digital Gate Arrays, Standard Cells, and Linear Arrays Are All Covered

Vol. II, page 4425

Base Number	Source	Device	Page-Line
40161	**Panasonic**	**MN40161B**	★ **828**
			★ **834**
			574-92
	RCA	**CD40161B**	★ **839**
			574-94
		CD40161BE	★ **839**
			574-95
	SGS	HCC40161B	574-102
		HCF40161B	574-103
	Signetics	**HEF40161B**	★ **865**
			★ **899**
			574-106
		HEF40161BD	★ **865**
			574-107
	Toshiba	TC40161B	574-110
40162	Fairchild	F40162BC	576-56
		F40162BM	576-57
	National	CD40162BC	576-63
		CD40162BM	576-64
	RCA	**CD40162B**	★ **839**
			576-69
		CD40162BE	★ **839**
			576-70
	SGS	HCC40162B	576-77
		HCF40162B	576-78
	Signetics	**HEF40162B**	★ **865**
			★ **899**
			576-81
		HEF40162BD	★ **865**
			576-82
	Toshiba	TC40162B	576-87
40163	Fairchild	F40163BC	574-44
		F40163BM	574-45
	National	CD40163BC	574-51
		CD40163BM	574-52
	RCA	**CD40163B**	★ **839**
			574-58
		CD40163BE	★ **839**
			574-59
	SGS	HCC40163	574-66
		HCF40163	574-67
	Signetics	**HEF40163B**	★ **865**
			★ **899**
			574-70
		HEF40163BD	★ **865**
			574-71
	Toshiba	TC40163B	574-74
4017	Fairchild	F4017BC	576-15
		F4017BM	576-16
	Motorola	MC4017	611-144
	National	CD4017BC	576-22
		CD4017BM	576-23
	Panasonic	**MN4017B**	★ **828**
			★ **834**
			576-26
	RCA	**CD4017A**	★ **839**
			576-27
			¶ 253-16
		CD4017AE	★ **839**
			576-28
			¶ 253-16
		CD4017B	★ **839**
			576-29
			¶ 253-16
		CD4017BE	★ **839**
			576-30
			¶ 253-16
	Sanyo	STK4017	3164-162
	SGS	HCC4017B	576-37
		HCF4017B	576-38
	Signetics	**HEF4017B**	★ **864**
			★ **898**
			576-41
		HEF4017BD	★ **864**
			576-42
	SSS	883/4017B	576-43
		SCL4017B	576-44
	Solitron	CM4017A	576-45
		CM4017AE	576-46
	Toshiba	TC4017B	576-49
40174	Fairchild	F40174BC	580-155
		F40174BM	580-156
	National	CD40174BC	580-162
		CD40174BM	580-163
	RCA	**CD40174B**	★ **838**
			580-167
			(Continued)

Base Number	Source	Device	Page-Line
40174	**RCA**	**CD40174BE**	★ **838**
			580-168
	SGS	HCC40174B	580-176
		HCF40174B	580-177
	Signetics	**HEF40174B**	★ **865**
			★ **899**
			580-180
		HEF40174BD	★ **865**
			580-181
	Toshiba	TC40174B	580-186
40175	Fairchild	F40175BC	580-127
		F40175BM	580-128
	National	CD40175B	580-134
	RCA	**CD40175B**	★ **838**
			580-139
		CD40175BE	★ **838**
			580-140
	Signetics	**HEF40175B**	★ **865**
			★ **899**
			580-148
		HEF40175BD	★ **865**
			580-149
	Toshiba	TC40175B	580-152
4018	Fairchild	F4018BC	577-139
		F4018BM	577-140
	Motorola	MC4018	611-137
			¶ 258-16
	National	CD4018BC	577-144
		CD4018BM	577-145
	RCA	**CD4018A**	★ **839**
			577-146
			¶ 254-4
		CD4018AE	★ **839**
			577-147
			¶ 254-4
		CD4018B	★ **839**
			577-148
			¶ 254-4
		CD4018BE	★ **839**
			577-149
			¶ 254-4
	SGS	HCC4018B	577-150
		HCF4018B	577-151
	Signetics	**HEF4018B**	★ **864**
			★ **898**
		HEF4018BD	★ **864**
			577-153
	SSS	883/4018B	577-154
		SCL4018B	577-155
	Solitron	CM4018A	577-156
		CM4018AE	577-157
			3790-63
	Toshiba	TC4018B	577-158
40181	**RCA**	**CD40181B**	★ **840**
			571-81
		CD40181BE	★ **840**
			571-82
	SGS	HCC40181B	571-84
		HCF40181B	571-85
40182	**RCA**	**CD40182B**	★ **840**
			571-95
		CD40182BE	★ **840**
			571-96
	SGS	HCC40182	571-98
		HCF40182	571-99
4019	Fairchild	F4019BC	583-172
		F4019BM	583-173
	Motorola	MC4019	611-138
	National	CD4019BC	583-175
		CD4019BM	583-176
	RCA	**CD4019A**	★ **837**
			★ **839**
			583-177
			¶ 250-4
		CD4019AE	★ **837**
			★ **839**
			583-178
			¶ 250-4
		CD4019B	★ **837**
			★ **839**
			583-179
			¶ 250-4
		CD4019BE	★ **837**
			★ **839**
			583-180
			(Continued)

Base Number	Source	Device	Page-Line
4019	**RCA**	**CD4019BE**	¶ 250-4
	Sanyo	STK4019	3164-163
	SGS	HCC4019B	583-181
		HCF4019B	583-182
	Signetics	**HEF4019B**	★ **864**
			★ **898**
			583-183
	SSS	883/4019B	583-185
		SCL4019B	583-186
	Solitron	CM4019A	583-187
		CM4019AE	583-188
	Toshiba	TC4019B	583-189
40192	Fairchild	F40192BC	576-133
		F40192BM	576-134
	National	CD40192BC	576-143
		CD40192BM	576-144
	RCA	**CD40192B**	★ **839**
			576-152
		CD40192BE	★ **839**
			576-153
	SGS	HCC40192B	576-162
		HCF40192B	576-164
	Signetics	**HEF40192B**	★ **865**
			★ **899**
			576-168
		HEF40192BD	★ **865**
			576-169
	Toshiba	TC40192B	576-178
40193	Fairchild	F40193BC	574-121
		F40193BM	574-122
	National	CD40193BC	574-132
		CD40193BM	574-133
	RCA	**CD40193B**	★ **839**
			574-142
		CD40193BE	★ **839**
			574-143
	Signetics	**HEF40193B**	★ **865**
			★ **899**
			574-162
		HEF40193BD	★ **865**
			574-163
	Toshiba	TC40193	574-170
40194	Fairchild	F40194BC	590-95
			3789-46
		F40194BM	590-96
			3789-35
	RCA	**CD40194B**	★ **838**
			590-158
	SGS	HCC40194B	590-111
		HCF40194B	590-112
	Signetics	**HEF40194B**	★ **865**
			★ **899**
			591-1
		HEF40194BD	★ **865**
			591-2
	Toshiba	TC40194B	590-117
40195	Fairchild	F40195BC	590-127
			3789-47
		F40195BM	590-128
			3789-36
	National	CD40195BC	590-131
		CD40195BM	590-132
	Signetics	**HEF40195B**	★ **865**
			★ **899**
			590-144
		HEF40195BD	★ **865**
			590-145
402	AnalogSys	MD402	2679-72
	Cherry	CS402	3234-112
	National	COP402	1338-54
			1259-19
		COP402M	1338-47
			1259-20
	Sprague	UHC/D-402	614-29
			2683-73
		UHP-402	614-33
			2683-77
4020	Fairchild	F4020BC	575-125
		F4020BM	575-126
	National	CD4020BC	575-132
		CD4020BM	575-133
	RCA	**CD4020A**	★ **839**
			575-136
		CD4020AE	★ **839**
			575-137
		CD4020B	★ **839**
			(Continued)

Base Number	Source	Device	Page-Line
4020	**RCA**	**CD4020B**	**575-138**
		CD4020BE	★ **839**
			575-139
	SGS	HCC4020B	575-146
		HCF4020B	575-147
	Signetics	**HEF4020B**	★ **864**
			★ **898**
			575-150
		HEF4020BD	★ **864**
			575-151
	SSS	883/4020B	575-152
		SCL4020B	575-153
	Solitron	CM4020A	575-154
		CM4020AE	575-155
	Toshiba	TC4020B	575-156
40208	**RCA**	**CD40208B**	★ **838**
			★ **840**
			587-102
		CD40208BE	★ **838**
			★ **840**
			587-103
	SGS	HCC40208B	587-104
		HCF40208B	587-105
4021	Fairchild	F4021BC	591-11
			3790-54
		F4021BM	591-12
			3790-66
	Motorola	MC4021	603-34
	National	CD4021A	591-16
			3790-58
		CD4021BC	591-17
		CD4021BM	591-18
	RCA	**CD4021A**	★ **838**
			591-19
		CD4021AE	★ **838**
			591-20
		CD4021B	★ **838**
			591-21
	RCA	CD4021B	3790-70
	RCA	**CD4021BE**	★ **838**
			591-22
	RCA	CD4021BE	3790-60
	Sanyo	STK4021	3165-49
	SGS	HCC4021B	591-23
		HCF4021B	591-24
	Signetics	**HEF4021B**	★ **864**
			★ **898**
			591-25
		HEF4021BD	★ **864**
			591-26
	SSS	883/4021B	591-27
			3790-72
		SCL4021B	591-28
			3790-62
	Solitron	CM4021A	591-29
			3790-74
		CM4021AE	591-30
			3790-64
	Toshiba	TC4021B	591-31
4022	Fairchild	F4022BC	577-111
		F4022BM	577-112
	Motorola	MC4022	603-35
	National	CD4022BC	577-115
		CD4022BM	577-116
	RCA	**CD4022A**	★ **839**
			577-117
		CD4022AE	★ **839**
			577-118
		CD4022B	★ **839**
			577-119
		CD4022BE	★ **839**
			577-120
	SGS	HCC4022B	577-121
		HCF4022B	577-122
	Signetics	**HEF4022B**	★ **864**
			★ **898**
			577-123
		HEF4022BD	★ **864**
			577-124
	SSS	883/4022B	577-125
		SCL4022B	577-126
	Solitron	CM4022A	577-127
		CM4022AE	577-128
	Toshiba	TC4022B	577-129
4023	**Burr-Brown**	**4023**	★ **2852**
			3235-93
			(Continued)

Arranged alphanumerically from left to right

Base Number	Source	Device	Page-Line
4023	Fairchild	F4023BC	583-17
		F4023BM	583-18
	Motorola	MC4023	611-169
	National	CD4023BC	583-26
		CD4023BM	583-27
	Panasonic	**MN4023B**	★ **828**
			★ **834**
			583-34
	RCA	**CD4023A**	★ **837**
			583-36
		CD4023AE	★ **837**
			583-37
		CD4023B	★ **837**
			583-38
		CD4023BE	★ **837**
			583-39
		CD4023UB	★ **837**
			583-40
		CD4023UBE	★ **837**
			583-41
	Sanyo	STK4023	3165-50
	SGS	HCC4023B	583-48
		HCF4023B	583-49
	Signetics	**HEF4023B**	★ **864**
			★ **898**
			583-52
		HEF4023BD	★ **864**
			583-53
	SSS	883/4023B	583-54
		SCL4023B	583-55
	Solitron	CM4023A	583-56
		CM4023AE	583-57
	Toshiba	TC4023B	583-60
4024	Fairchild	F4024BC	575-48
		F4024BM	575-49
	Motorola	MC4024	631-19
			¶ 258-16
			¶ 310-5
			3215-30
			¶ 258-16
			¶ 310-5
	National	CD4024BC	575-55
		CD4024BM	575-56
	Panasonic	**MN4024B**	★ **828**
			★ **834**
			575-57
	RCA	**CD4024A**	★ **838**
			575-58
			¶ 253-16
		CD4024AE	★ **838**
			575-59
			¶ 253-16
		CD4024B	★ **838**
			575-60
			¶ 253-16
		CD4024BE	★ **838**
			575-61
			¶ 253-16
	SGS	HCC4024B	575-66
		HCF4024B	575-67
	Signetics	**HEF4024B**	★ **864**
			★ **898**
			575-70
		HEF4024BD	★ **864**
			575-71
	SSS	883/4024B	575-72
		SCL4024B	575-73
	Solitron	CM4024A	575-74
		CM4024AE	575-75
	Toshiba	TC4024B	575-76
40240	**Signetics**	**HEF40240B**	★ **865**
			★ **899**
			594-31
40244	**Signetics**	**HEF40244B**	★ **865**
			★ **899**
			593-184
40245	**Signetics**	**HEF40245B**	★ **865**
			★ **899**
			594-154
4025	AMD	MM4025	3788-30
	Burr-Brown	**4025**	★ **2852**
			3235-94
	Fairchild	F4025BC	584-180
		F4025BM	584-181
	National	CD4025A	584-189
		CD4025BC	584-190
			(Continued)

Base Number	Source	Device	Page-Line
4025	National	CD4025BM	584-191
	Panasonic	**MN4025B**	★ **828**
			★ **834**
			584-194
	RCA	**CD4025A**	★ **837**
			585-2
		CD4025AE	★ **837**
			585-3
		CD4025B	★ **837**
			585-4
		CD4025BE	★ **837**
			585-5
		CD4025UB	★ **837**
			585-6
		CD4025UBE	★ **837**
			585-7
	Sanyo	STK4025	3165-51
	SGS	HCC4025B	585-14
		HCF4025B	585-15
	Signetics	**HEF4025B**	★ **864**
			★ **898**
			585-18
		HEF4025BD	★ **864**
			585-19
	SSS	883/4025B	585-20
		SCL4025B	585-21
	Solitron	CM4025A	585-22
		CM4025AE	585-23
	Toshiba	TC4025B	585-26
40257	**RCA**	**CD40257B**	★ **839**
			588-129
		CD40257BE	★ **839**
			588-130
	SGS	HCC40257B	588-137
		HCF40257B	588-138
4026	AMD	MM4026	3788-31
	RCA	**CD4026A**	★ **839**
			575-184
			¶ 251-8
		CD4026AE	★ **839**
			575-185
			¶ 251-8
		CD4026B	★ **839**
			575-186
			¶ 251-8
		CD4026BE	★ **839**
			575-187
			¶ 251-8
	SGS	HCC4026B	575-188
		HCF4026B	575-189
	SSS	883/4026AB	575-190
		SCL4026AB	575-192
	Solitron	CM4026A	575-194
		CM4026AE	575-195
4027	AMD	MM4027	3788-36
	Fairchild	F4027BC	582-10
		F4027BM	582-11
	Intersil	MK4027-2	3768-22
		MK4027-3	3768-29
		MK4027-4	3768-38
	ITT	ITT4027-2	3768-23
		ITT4027-3	3768-30
		ITT4027-4	3768-39
		ITT4027-6	3768-48
	Mostek	MK4027-1	3768-19
			¶ 268-8
			¶ 277-10
			¶ 319-6
			¶ 321-1
			¶ 323-11
			¶ 323-15
		MK4027-2	3768-24
			¶ 268-8
			¶ 277-10
			¶ 319-6
			¶ 321-1
			¶ 323-11
			¶ 323-15
		MK4027-3	3768-31
			¶ 268-8
			¶ 277-10
			¶ 319-6
			¶ 321-1
			¶ 323-11
			¶ 323-15
		MK4027-4	3768-40
			(Continued)

Base Number	Source	Device	Page-Line
4027	Mostek	MK4027-4	¶ 268-8
			¶ 277-10
			¶ 319-6
			¶ 321-1
			¶ 323-11
			¶ 323-15
		MKB4027-83	3768-32
		MKB4027-84	3768-41
	Motorola	MCM4027A-1	3768-20
			¶ 322-15
		MCM4027A-2	3768-25
			¶ 322-15
		MCM4027A-3	3768-33
			¶ 322-15
		MCM4027A-4	3768-42
			¶ 322-15
	National	CD4027BC	582-19
		CD4027BM	582-20
	Panasonic	**MN4027B**	★ **828**
			★ **834**
			582-27
	RCA	**CD4027A**	★ **838**
			582-30
		CD4027AE	★ **838**
			582-31
		CD4027B	★ **838**
			582-32
		CD4027BE	★ **838**
			582-33
	SGS	HCC4027B	582-42
		HCF4027B	582-43
		M4027-2	3768-26
		M4027-3	3768-34
		M4027-4	3768-43
	Signetics	**HEF4027B**	★ **864**
			★ **898**
			582-46
		HEF4027BD	★ **864**
			582-47
	SSS	883/4027B	582-48
		SCL4027B	582-49
	Solitron	CM4027A	582-50
		CM4027AE	582-51
	Toshiba	TC4027B	582-56
4028	Fairchild	F4028BC	578-27
		F4028BM	578-28
	National	CD4028BC	578-34
		CD4028BM	578-35
	Panasonic	**MN4028B**	★ **828**
			578-40
	RCA	**CD4028A**	★ **837**
			578-42
		CD4028AE	★ **837**
			578-43
		CD4028B	★ **837**
			578-44
		CD4028BE	★ **837**
			578-45
	SGS	HCC4028B	578-52
		HCF4028B	578-53
	Signetics	**HEF4028B**	★ **864**
			★ **898**
			578-56
		HEF4028BD	★ **864**
			578-57
	SSS	883/4028B	578-58
		SCL4028B	578-59
	Solitron	CM4028A	578-60
		CM4028AE	578-61
	Toshiba	TC4028B	578-64
4029	Fairchild	F4029BC	577-159
		F4029BM	577-160
	National	CD4029BC	577-163
		CD4029BM	577-164
	Panasonic	**MN4029B**	★ **828**
			★ **834**
			578-1
	RCA	**CD4029A**	★ **839**
			578-2
		CD4029B	★ **839**
			578-3
		CD4029BE	★ **839**
			578-4
	SGS	HCC4029B	578-5
		HCF4029B	578-6
	Signetics	**HEF4029B**	★ **864**
			(Continued)

Base Number	Source	Device	Page-Line
4029	**Signetics**	**HEF4029B**	★ **898**
			578-7
		HEF4029BD	★ **864**
			578-8
	SSS	883/4029B	578-9
		SCL4029B	578-10
	Solitron	CM4029A	578-11
		CM4029AE	578-12
	Toshiba	TC4029B	578-13
403	AnalogSys	MA403	3190-16
	Sprague	UHC/D-403	614-30
			2683-74
		UHP-403	614-34
			2683-78
4030	Fairchild	F4030BC	585-113
		F4030BM	585-114
	National	CD4030A	585-122
	Panasonic	**MN4030B**	★ **828**
			★ **834**
			585-131
	RCA	**CD4030A**	★ **837**
			★ **840**
			585-134
		CD4030AE	★ **837**
			★ **840**
			585-135
		CD4030B	★ **837**
			★ **840**
			585-136
		CD4030BE	★ **837**
			★ **840**
			585-137
	SGS	HCC4030B	585-146
		HCF4030B	585-148
	Signetics	**HEF4030B**	★ **864**
			★ **898**
			585-152
		HEF4030BD	★ **864**
			585-153
	SSS	883/4030B	585-156
		SCL4030B	585-158
	Solitron	CM4030A	585-160
		CM4030AE	585-161
	Telmos	TM4030	4467-29
	Toshiba	TC4030B	585-166
4031	Fairchild	F4031BC	592-1
			3791-40
		F4031BM	592-2
			3791-42
	National	CD4031BC	592-3
			3791-46
		CD4031BM	592-4
			3791-47
	RCA	**CD4031A**	★ **838**
			592-5
		CD4031AE	★ **838**
			592-6
		CD4031B	★ **838**
			592-7
	RCA	CD4031B	3791-43
	RCA	**CD4031BE**	★ **838**
			592-8
	RCA	CD4031BE	3791-41
	SGS	HCC4031B	592-10
		HCF4031B	592-11
	Signetics	**HEF4031B**	★ **864**
			★ **898**
			592-12
		HEF4031BD	★ **864**
			592-13
4032	**RCA**	**CD4032A**	★ **840**
			571-20
		CD4032AE	★ **840**
			571-21
		CD4032B	★ **840**
			571-22
		CD4032BE	★ **840**
			571-23
	SGS	HCC4032B	571-24
		HCF4032B	571-25
	Solitron	CM4032A	571-26
		CM4032AE	571-27
	Toshiba	TC4032B	571-28
4033	**RCA**	**CD4033A**	★ **839**
			576-1
			¶ 251-8
			(Continued)

¶ Indicates page number in Application Note Directory.
★ Indicates addition data is provided on the page noted.

Base Number	Source	Device	Page-Line
4033	**RCA**	**CD4033AE**	★ **839**
			576-2
			¶ 251-8
		CD4033B	★ **839**
			576-3
			¶ 251-8
		CD4033BE	★ **839**
			576-4
			¶ 251-8
	SGS	HCC4033B	576-5
		HCF4033B	576-6
	SSS	883/4033AB	576-7
		SCL4033AB	576-9
	Solitron	CM4033A	576-11
		CM4033AE	576-12
4034	Fairchild	F4034BC	591-32
		F4034BM	591-33
	National	CD4034BC	591-37
			3790-17
		CD4034BM	591-38
			3790-18
	RCA	**CD4034A**	★ **838**
			★ **840**
			591-39
		CD4034AE	★ **838**
			★ **840**
			591-40
		CD4034B	★ **838**
			★ **840**
			591-41
			★ **838**
			★ **840**
			3790-19
		CD4034BE	★ **838**
			★ **840**
			591-42
	SGS	HCC4034B	591-43
		HCF4034B	591-44
	SSS	883/4034B	591-45
			3790-20
		SCL4034B	591-46
			3790-14
	Solitron	CM4034A	591-47
			3790-24
		CM4034AE	591-48
			3790-16
	Toshiba	TC4034B	591-49
			3790-21
4035	Fairchild	F4035BC	590-149
			3789-48
		F4035BM	590-150
			3789-37
	National	CD4035BC	590-154
			3789-40
		CD4035BM	590-155
			3789-50
	Panasonic	**MN4035B**	★ **828**
			590-156
	RCA	**CD4035A**	★ **838**
			590-159
		CD4035AE	★ **838**
			590-160
		CD4035B	★ **838**
			590-161
	RCA	CD4035B	3789-52
	RCA	**CD4035BE**	★ **838**
			590-162
	RCA	CD4035BE	3789-42
	SGS	HCC4035B	590-164
		HCF4035B	590-166
	Signetics	**HEF4035B**	★ **864**
			★ **898**
			591-3
		HEF4035BD	★ **864**
			591-4
	SSS	883/4035B	591-5
			3789-43
		SCL4035B	591-6
			3789-44
	Solitron	CM4035A	591-7
			3789-53
		CM4035AE	591-8
			3789-45
	Toshiba	TC4035B	591-10
4036	AMI	S4036	3173-32
	RCA	CD4036A	587-115
			(Continued)

Base Number	Source	Device	Page-Line
4036	RCA	CD4036A	3770-58
		CD4036AE	587-116
	Solitron	CM4036A	587-117
			3770-56
		CM4036AE	587-118
	Toshiba	TC4036B	587-119
40368	Toshiba	TC40368	573-27
4037	**RCA**	**CD4037A**	★ **837**
			583-168
		CD4037AE	★ **837**
			583-169
	Solitron	CM4037A	583-170
		CM4037AE	583-171
40373	**Signetics**	**HEF40373B**	★ **865**
			★ **899**
			586-171
40374	**Signetics**	**HEF40374B**	★ **865**
			★ **899**
			581-117
4038	Motorola	MC4038	612-19
	RCA	**CD4038A**	★ **840**
			571-8
		CD4038AE	★ **840**
			571-9
		CD4038B	★ **840**
			571-10
		CD4038BE	★ **840**
			571-11
	SGS	HCC4038B	571-12
		HCF4038B	571-13
	Solitron	CM4038A	571-14
		CM4038AE	571-15
	Toshiba	TC4038B	571-16
4039	Motorola	MC4039	2661-147
	RCA	CD4039A	587-120
			3770-55
		CD4039AE	587-121
	Solitron	CM4039A	587-122
			3770-57
		CM4039AE	587-123
	Toshiba	TC4039B	587-124
404	AnalogSys	MK404	3160-15
	Fairchild	F404BC	575-89
	Ferranti	ZN404	3236-84
	National	**COP404**	★ **1525**
			1338-55
		COP404LP	★ **1525**
			1259-21
		COP404LS	★ **1525**
			1259-22
4040	Fairchild	F4040BM	575-88
	Motorola	MC4040	612-33
	National	CD4040BC	575-95
		CD4040BM	575-96
	Panasonic	**MN4040B**	★ **828**
			★ **834**
			575-99
	RCA	**CD4040A**	★ **838**
			575-101
		CD4040AE	★ **838**
			575-102
		CD4040B	★ **838**
			575-103
		CD4040BE	★ **838**
			575-104
	SGS	HCC4040B	575-110
		HCF4040B	575-111
	Signetics	**HEF4040B**	★ **864**
			★ **898**
			575-114
		HEF4040BD	★ **864**
			575-115
	SSS	883/4040B	575-116
		SCL4040B	575-117
	Solitron	CM4040A	575-118
		CM4040AE	575-119
	Telmos	TM4040	4467-31
	Toshiba	TC4040B	575-120
4041	Fairchild	F4041BC	572-28
		F4041BM	572-29
	Motorola	MC4041	2666-15
	National	CD4041C	572-30
		CD4041M	572-31
	RCA	**CD4041A**	★ **837**
			572-32
		CD4041AE	★ **837**
			(Continued)

Base Number	Source	Device	Page-Line
4041	**RCA**	**CD4041AE**	**572-33**
		CD4041UB	★ **837**
			572-34
		CD4041UBE	★ **837**
			572-35
	SGS	HCC4041UB	572-36
		HCF4041UB	572-37
	Siemens	SDA4041	3214-60
	Signetics	**HEF4041B**	★ **864**
			★ **898**
			572-38
		HEF4041BD	★ **864**
			572-39
	SSS	883/4041UB	572-40
		SCL4041UB	572-41
	Solitron	CM4041A	572-42
		CM4041AE	572-43
4042	Fairchild	F4042BC	586-47
		F4042BM	586-48
	Motorola	MC4042	613-150
			2683-35
	National	CD4042BC	586-54
		CD4042BM	586-55
	RCA	**CD4042A**	★ **838**
			586-59
		CD4042AE	★ **838**
			586-60
		CD4042B	★ **838**
			586-61
		CD4042BE	★ **838**
			586-62
	SGS	HCC4042B	586-69
		HCF4042B	586-70
	Signetics	**HEF4042B**	★ **864**
			★ **898**
			586-73
		HEF4042BD	★ **864**
			586-74
	SSS	883/4042B	586-75
		SCL4042B	586-76
	Solitron	CM4042A	586-77
		CM4042AE	586-78
	Toshiba	TC4042B	586-81
4043	Fairchild	F4043BC	586-103
		F4043BM	586-104
	Motorola	MC4043	2681-42
	National	CD4043A	586-108
		CD4043BC	586-109
		CD4043BM	586-110
	RCA	**CD4043A**	★ **838**
			586-111
		CD4043AE	★ **838**
			586-112
		CD4043B	★ **838**
			586-113
		CD4043BE	★ **838**
			586-114
	SGS	HCC4043B	586-115
		HCF4043B	586-116
	Signetics	**HEF4043B**	★ **864**
			★ **898**
			586-117
		HEF4043BD	★ **864**
			586-118
	SSS	883/4043B	586-119
		SCL4043B	586-120
	Solitron	CM4043A	586-121
		CM4043AE	586-122
	Toshiba	TC4043B	586-123
4044	AMD	AM4044C	3780-78
	Fairchild	F4044BC	586-82
		F4044BM	586-83
	Motorola	MC4044	637-73
			¶ 258-16
			¶ 310-5
			3214-56
			¶ 258-16
			¶ 310-5
	National	CD4044A	586-87
		CD4044BC	586-88
		CD4044BM	586-89
	RCA	**CD4044A**	★ **838**
			586-90
		CD4044A/B	★ **838**
			586-91
		CD4044A/BE	★ **838**
			(Continued)

Base Number	Source	Device	Page-Line
4044	**RCA**	**CD4044A/BE**	**586-92**
		CD4044AE	★ **838**
			586-93
		CD4044B	★ **838**
			586-94
	SGS	HCC4044B	586-95
		HCF4044B	586-96
	Signetics	**HEF4044B**	★ **864**
			★ **898**
			586-97
		HEF4044BD	★ **864**
			586-98
	SSS	883/4044B	586-99
		SCL4044B	586-100
	Solitron	CM4044A	586-101
	TI	TMS4044-12	3780-17
		TMS4044-20	3780-43
		TMS4044-25	3780-66
		TMS4044-45	3780-127
	Toshiba	TC4044B	586-102
4045	**RCA**	**CD4045A**	★ **839**
			590-25
		CD4045AE	★ **839**
			590-26
		CD4045B	★ **839**
			590-27
		CD4045BE	★ **839**
			590-28
	SGS	HCC4045B	590-29
		HCF4045B	590-30
	Solitron	CM4045A	590-33
		CM4045AE	590-34
4046	Fairchild	F4046BC	592-85
			3214-34
		F4046BM	592-86
			3214-35
	National	CD4046BC	592-92
			3214-38
		CD4046BM	592-93
			3214-39
	RCA	**CD4046A**	★ **840**
			592-94
			¶ 310-10
	RCA	CD4046A	3214-40
	RCA	**CD4046AE**	★ **840**
			592-95
	RCA	CD4046AE	3214-41
	RCA	**CD4046B**	★ **840**
			592-96
	RCA	CD4046B	3214-42
	RCA	**CD4046BE**	★ **840**
			592-97
	RCA	CD4046BE	3214-43
	SGS	HCC4046B	592-102
		HCF4046B	592-103
	Signetics	**HEF4046B**	★ **864**
			★ **898**
			592-106
		HEF4046BD	★ **864**
			592-107
	SSS	883/4046B	592-108
			3214-48
		SCL4046B	592-110
			¶ 310-11
			3214-50
4047	Fairchild	F4047BC	589-75
		F4047BM	589-76
	National	CD4047BC	589-77
		CD4047BM	589-78
	RCA	**CD4047A**	★ **838**
			589-79
			¶ 253-6
		CD4047AE	★ **838**
			589-80
			¶ 253-6
		CD4047B	★ **838**
			589-81
			¶ 253-6
		CD4047BE	★ **838**
			589-82
			¶ 253-6
	SGS	HCC4047B	589-83
		HCF4047B	589-84
	Signetics	**HEF4047B**	★ **864**
			★ **898**
			589-85
			(Continued)

Arranged alphanumerically from left to right.

© IC MASTER 1984

Base Number	Source	Device	Page-Line
4047	**Signetics**	**HEF4047BD**	★ **864**
			589-86
	SSS	883/4047B	589-87
		SCL4047B	589-88
	Solitron	CM4047A	589-89
		CM4047AE	589-90
	Toshiba	TC4047B	589-91
4048	Motorola	MC4048	612-20
	National	CD4048BC	586-9
		CD4048BM	586-10
	RCA	**CD4048A**	★ **837**
			586-11
		CD4048AE	★ **837**
			586-12
		CD4048B	★ **837**
			586-13
		CD4048BE	★ **837**
			586-14
	SGS	HCC4048B	586-15
		HCF4048B	586-16
	Solitron	CM4048A	586-19
		CM4048AE	586-20
4049	Fairchild	F4049BC	572-87
		F4049BM	572-88
	National	CD4049UB	572-94
	Panasonic	**MN4049B**	★ **828**
			★ **834**
			572-97
	RCA	**CD4049A**	★ **837**
			572-99
		CD4049AE	★ **837**
			572-100
		CD4049UB	★ **837**
			572-101
		CD4049UBE	★ **837**
			572-102
	SGS	HCC4049UB	572-105
		HCF4049UB	572-106
	Signetics	**HEF4049B**	★ **864**
			★ **898**
			572-109
		HEF4049BD	★ **864**
			572-110
	SSS	883/4049UB	572-111
		SCL4049UB	572-112
	Solitron	CM4049A	572-113
		CM4049AE	572-114
	Toshiba	TC4049B	572-115
405	**Barvon**	**BC405**	★ **4626**
			4464-9
			4466-13
4050	Fairchild	F4050BC	572-131
		F4050BM	572-132
	Motorola	MC4050	611-166
	National	CD4050BC	572-138
		CD4050BM	572-139
	Panasonic	**MN4050B**	★ **828**
			★ **834**
			572-142
	RCA	**CD4050A**	★ **837**
			572-144
		CD4050AE	★ **837**
			572-145
		CD4050B	★ **837**
			572-146
		CD4050BE	★ **837**
			572-147
	SGS	HCC4050B	572-150
		HCF4050B	572-151
	Siemens	TDA4050B	3156-23
	Signetics	**HEF4050B**	★ **864**
			★ **898**
			572-154
		HEF4050BD	★ **864**
			572-155
	SSS	883/4050B	572-156
		SCL4050B	572-157
	Solitron	CM4050A	572-158
		CM4050AE	572-159
	Toshiba	TC4050B	572-160
4051	Fairchild	F4051BC	2623-30
		F4051BM	2623-31
	RCA	**CD4051B**	★ **839**
			2623-42
		CD4051BE	★ **839**
			2623-43
			(Continued)

Base Number	Source	Device	Page-Line
4051	SGS	HCC4051B	2623-45
		HCF4051B	2623-46
	Signetics	**HEF4051B**	★ **864**
			★ **898**
			2623-47
		HEF4051BD	★ **864**
			2623-48
	SSS	883/4051B	2623-51
		SCL4051B	2623-52
	Solitron	CM4051A	2623-53
		CM4051AE	2623-54
	Toshiba	TC4051B	2623-55
4052	Fairchild	F4052BC	2622-75
		F4052BM	2622-76
	Fujitsu	MB4052	2627-27
	National	CD4052BC	2622-84
		CD4052BM	2622-85
	Panasonic	**MN4052B**	★ **828**
			2622-86
	RCA	**CD4052B**	★ **839**
			2622-88
		CD4052BE	★ **839**
			2622-89
	SGS	HCC4052B	2622-91
		HCF4052B	2622-92
	Signetics	**HEF4052B**	★ **864**
			★ **898**
			2623-49
		HEF4052BD	★ **864**
			2623-50
	SSS	883/4052B	2622-93
		SCL4052B	2622-94
	Solitron	CM4052B	2622-95
		CM4052BE	2622-96
	Toshiba	TC4052B	2622-97
4053	Fairchild	F4053BC	2619-54
		F4053BM	2619-55
	Fujitsu	MB4053	2628-34
			2628-43
	National	CD4053BC	2619-63
		CD4053BM	2619-64
	Panasonic	**MN4053B**	★ **828**
			2619-65
	RCA	**CD4053B**	★ **839**
			2619-67
		CD4053BE	★ **839**
			2619-68
	SGS	HCC4053B	2619-70
		HCF4053B	2619-71
	Signetics	**HEF4053B**	★ **864**
			★ **898**
			2619-72
		HEF4053BD	★ **864**
			2619-73
	SSS	883/4053B	2619-74
		SCL4053B	2619-75
	Solitron	CM4053A	2619-76
		CM4053AE	2619-77
	Toshiba	TC4053B	2619-78
4054	**RCA**	**CD4054B**	★ **839**
			579-159
	RCA	CD4054B	2663-10
	RCA	**CD4054BE**	★ **839**
			579-160
	SGS	HCC4054B	579-161
		HCF4054B	579-162
	Telmos	TM4054	4467-32
	Toshiba	TC4054B	579-163
			2663-11
4055	AMD	AM4055	3791-90
	RCA	**CD4055B**	★ **839**
			579-120
	RCA	CD4055B	2662-36
	RCA	**CD4055BE**	★ **839**
			579-121
	RCA	CD4055BE	2662-37
	SGS	HCC4055B	579-122
		HCF4055B	579-123
	Toshiba	TC4055B	579-124
			2662-38
4056	AMD	AM4056	3791-97
	Motorola	MC4056	603-3
	RCA	**CD4056B**	★ **839**
			579-125
	RCA	CD4056B	2662-65
	RCA	**CD4056BE**	★ **839**
			(Continued)

Base Number	Source	Device	Page-Line
4056	**RCA**	**CD4056BE**	**579-126**
	RCA	CD4056BE	2662-66
	SGS	HCC4056B	579-127
		HCF4056B	579-128
	Toshiba	TC4056B	579-129
			2662-69
4057	AMD	AM4057	3791-100
	RCA	**CD4057A**	★ **840**
			571-83
4058	SGS	HCF4058B	586-32
	TeledyneP	4058	2651-40
4059	**RCA**	**CD4059A**	★ **839**
			577-92
			¶ 309-14
		CD4059AE	★ **839**
			577-93
			¶ 309-14
	Signetics	**HEF4059B**	★ **864**
			★ **898**
			577-94
		HEF4059BD	★ **864**
			577-95
406	AnalogSys	MA406	3205-15
	Sprague	UHC/D-406	613-154
			2683-43
		UHP-406	613-158
			2683-47
4060	IntlMicCir	G4060	4471-13
	Motorola	MC4060	636-138
	National	CD4060BC	575-161
		CD4060BM	575-162
	RCA	**CD4060A**	★ **839**
			575-165
		CD4060AE	★ **839**
			575-166
		CD4060B	★ **839**
			575-167
			¶ 306-14
		CD4060BE	★ **839**
			575-168
	SGS	HCC4060B	575-173
		HCF4060B	575-174
	Signetics	**HEF4060B**	★ **864**
			★ **898**
			575-177
		HEF4060BD	★ **864**
			575-178
	SSS	883/4060B	575-179
		SCL4060B	575-180
4061	RCA	CD4061A	587-154
			¶ 322-9
4063	**RCA**	**CD4063B**	★ **840**
			571-117
		CD4063BE	★ **840**
			571-118
	SGS	HCC4063B	571-126
		HCF4063B	571-127
	Toshiba	TC4063B	571-136
4065	TeledyneP	4065	2649-12
40650	**RCA**	**PA40650**	★ **4824**
			4466-17
4066	Fairchild	F4066BC	2617-24
		F4066BM	2617-25
	National	CD4066BC	2617-31
		CD4066BM	2617-32
	Panasonic	**MN4066B**	★ **828**
			2617-33
	RCA	**CD4066A**	★ **840**
			2617-35
		CD4066AE	★ **840**
			2617-36
		CD4066B	★ **840**
			2617-37
		CD4066BE	★ **840**
			2617-38
	SGS	HCC4066B	2617-40
		HCF4066B	2617-41
	Signetics	**HEF4066B**	★ **864**
			★ **898**
			2617-42
		HEF4066BD	★ **864**
			2617-43
	Signetics	N4066A	2617-44
	SSS	883/4066B	2617-45
		SCL4066B	2617-46
	Toshiba	TC4066B	2617-47

Base Number	Source	Device	Page-Line
4067	Fairchild	F4067BC	2624-48
		F4067BM	2624-49
	RCA	**CD4067B**	★ **839**
			2624-50
		CD4067BE	★ **839**
			2624-51
	SGS	HCC4067B	2624-52
		HCF4067B	2624-53
	Signetics	**HEF4067B**	★ **864**
			★ **898**
			2624-54
		HEF4067BD	★ **864**
			2624-55
4068	Fairchild	F4068BC	583-129
		F4068BM	583-130
	RCA	**CD4068B**	★ **837**
			583-141
		CD4068BE	★ **837**
			583-142
	SGS	HCC4068B	583-145
		HCF4068B	583-146
	Signetics	**HEF4068B**	★ **864**
			★ **898**
			583-147
		HEF4068BD	★ **864**
			583-148
	SSS	883/4068B	583-149
		SCL4068B	583-150
	Solitron	CM4068A	583-151
		CM4068AE	583-152
	Toshiba	TC4068B	583-155
4069	Fairchild	F4069UBC	573-184
		F4069UBM	573-185
	National	CD4069C	573-197
		CD4069M	573-198
	Panasonic	**MN4069UB**	★ **828**
			★ **834**
			574-5
	RCA	**CD4069UB**	★ **837**
			574-6
		CD4069UBE	★ **837**
			574-7
	Sanyo	LC4069UB	574-15
	SGS	HCC4069UB	574-18
		HCF4069UB	574-19
	Signetics	HEF4069B	574-22
		HEF4069BD	574-23
	Signetics	**HEF4069UB**	★ **864**
			★ **898**
			574-24
	SSS	883/4069UB	574-25
		SCL4069UB	574-27
	Solitron	CM4069A	574-29
		CM4069AE	574-30
	Toshiba	TC4069UB	574-33
407	Sprague	UHC/D-407	614-8
			2683-53
		UHP-407	614-12
			2683-57
4070	Fairchild	F4070BC	585-115
		F4070BM	585-116
	National	CD4070BC	585-123
		CD4070BM	585-124
	Panasonic	**MN4070B**	★ **828**
			★ **834**
			585-132
	RCA	**CD4070B**	★ **837**
			★ **840**
			585-138
		CD4070BE	★ **837**
			★ **840**
			585-139
	SGS	HCC4070B	585-147
		HCF4070B	585-149
	Signetics	**HEF4070B**	★ **864**
			★ **898**
			585-154
		HEF4070BD	★ **864**
			585-155
	SSS	883/4070B	585-157
		SCL4070B	585-159
	Solitron	CM4070A	585-162
		CM4070AE	585-163
4071	Fairchild	F4071BC	584-79
		F4071BM	584-80
	National	CD4071BC	584-86
			(Continued)

¶ Indicates page number in Application Note Directory.
★ Indicates addition data is provided on the page noted.

Base Number	Source	Device	Page-Line
4071	National	CD4071BM	584-87
	Panasonic	**MN4071B**	★ **828**
			★ **834**
			584-92
	RCA	**CD4071B**	★ **837**
			584-94
		CD4071BE	★ **837**
			584-95
	Sanyo	LC4071B	584-100
	SGS	HCC4071B	584-103
		HCF4071B	584-104
	Signetics	**HEF4071B**	★ **864**
			★ **898**
			584-107
		HEF4071BD	★ **864**
			584-108
	SSS	883/4071B	584-109
		SCL4071B	584-110
	Solitron	CM4071A	584-111
		CM4071AE	584-112
	Toshiba	TC4071B	584-115
4072	Fairchild	F4072BC	584-29
		F4072BM	584-30
	National	CD4072BC	584-34
		CD4072BM	584-35
	Panasonic	**MN4072B**	★ **828**
			★ **834**
			584-36
	RCA	**CD4072B**	★ **837**
			584-37
		CD4072BE	★ **837**
			584-38
	SGS	HCC4072B	584-39
		HCF4072B	584-40
	Signetics	**HEF4072B**	★ **864**
			★ **898**
			584-41
		HEF4072BD	★ **864**
			584-42
	SSS	883/4072B	584-43
		SCL4072B	584-44
	Toshiba	TC4072B	584-45
4073	Fairchild	F4073BC	582-81
		F4073BM	582-82
	National	CD4073BC	582-88
		CD4073BM	582-89
	Panasonic	**MN4073B**	★ **828**
			★ **834**
			582-92
	RCA	**CD4073B**	★ **837**
			582-94
		CD4073BE	★ **837**
			582-95
	SGS	HCC4073B	582-102
		HCF4073B	582-103
	Signetics	**HEF4073B**	★ **864**
			★ **898**
			582-106
		HEF4073BD	★ **864**
			582-107
	SSS	883/4073B	582-108
		SCL4073B	582-109
	Solitron	CM4073A	582-110
		CM4073AE	582-111
	Toshiba	TC4073B	582-114
4075	Fairchild	F4075BC	584-46
		F4075BM	584-47
	National	CD4075BC	584-53
		CD4075BM	584-54
	Panasonic	**MN4075B**	★ **828**
			★ **834**
			584-57
	RCA	**CD4075B**	★ **837**
			584-59
		CD4075BE	★ **837**
			584-60
	SGS	HCC4075B	584-65
		HCF4075B	584-66
	Signetics	**HEF4075B**	★ **864**
			★ **898**
			584-69
		HEF4075BD	★ **864**
			584-70
	SSS	883/4075B	584-71
		SCL4075B	584-72
	Toshiba	TC4075B	584-75
4076	Fairchild	F4076BC	580-91
		F4076BM	580-92
	National	CD4076BC	580-98
		CD4076BM	580-99
	Panasonic	**MN4076B**	★ **828**
			★ **834**
			580-102
	RCA	**CD4076B**	★ **838**
			580-103
		CD4076BE	★ **838**
			580-104
	SGS	HCC4076B	580-111
		HCF4076B	580-112
	Signetics	**HEF4076B**	★ **864**
			★ **898**
			580-115
		HEF4076BD	★ **864**
			580-116
	SSS	883/4076B	580-117
		SCL4076B	580-118
	Solitron	CM4076A	580-119
		CM4076AE	580-120
	Toshiba	TC4076B	580-123
4077	Fairchild	F4077BC	585-169
		F4077BM	585-170
	RCA	**CD4077B**	★ **837**
			★ **840**
			585-177
		CD4077BE	★ **837**
			★ **840**
			585-178
	SGS	HCC4077B	585-181
		HCF4077B	585-182
	Signetics	**HEF4077B**	★ **864**
			★ **898**
			585-183
		HEF4077BD	★ **864**
			585-184
	SSS	883/4077B	585-185
		SCL4077B	585-186
	Solitron	CM4077A	585-187
		CM4077AE	585-188
	Telmos	TM4077	4467-33
4078	Fairchild	F4078BC	585-86
		F4078BM	585-87
	Panasonic	**MN4078B**	★ **828**
			★ **834**
			585-95
	RCA	**CD4078B**	★ **837**
			585-97
		CD4078BE	★ **837**
			585-98
	SGS	HCC4078B	585-99
		HCF4078B	585-100
	Signetics	**HEF4078B**	★ **864**
			★ **898**
			585-101
		HEF4078BD	★ **864**
			585-102
	SSS	883/4078B	585-103
		SCL4078B	585-104
	Solitron	CM4078A	585-106
		CM4078AE	585-107
	Toshiba	TC4078B	585-109
408	Sprague	UHC/D-408	614-9
			2683-54
		UHP-408	614-13
			2683-58
4080	TeledyneP	4080	2649-28
		4080-83	2649-29
4081	Fairchild	F4081BC	582-119
		F4081BM	582-120
	National	CD4081BC	582-126
		CD4081BM	582-127
	NEC	uPC4081	3202-31
	Panasonic	**MN4081B**	★ **828**
			★ **834**
			582-133
	RCA	**CD4081B**	★ **837**
			582-135
		CD4081BE	★ **837**
			582-136
	Sanyo	LC4081B	582-141
	SGS	HCC4081B	582-144
		HCF4081B	582-145
	Signetics	**HEF4081B**	★ **864**
			(Continued)
4081	**Signetics**	**HEF4081B**	★ **898**
			582-148
		HEF4081BD	★ **864**
			582-149
	SSS	883/4081B	582-150
		SCL4081B	582-151
	Solitron	CM4081A	582-152
		CM4081AE	582-153
	TeledyneP	4081	2649-30
		4081-83	2649-31
	Toshiba	TC4081B	582-156
4082	**Burr-Brown**	**4082/03**	★ **2852**
			3232-100
	Fairchild	F4082BC	582-64
		F4082BM	582-65
	National	CD4082BC	582-69
		CD4082BM	582-70
	NEC	uPC4082	3209-43
	RCA	**CD4082B**	★ **837**
			582-71
		CD4082BE	★ **837**
			582-72
	SGS	HCC4082B	582-73
		HCF4082B	582-74
	Signetics	**HEF4082B**	★ **864**
			★ **898**
			582-75
		HEF4082BD	★ **864**
			582-76
	SSS	883/4082B	582-77
		SCL4082B	582-78
	TeledyneP	4082	2649-32
		4082-83	2649-33
	Toshiba	TC4082B	582-79
4084	NEC	uPC4084	3213-33
	TeledyneP	4084	2640-14
		4084-01	2640-15
		4084-02	2639-10
		4084-03	2639-11
4085	**Burr-Brown**	**4085**	★ **2852**
			3235-120
		4085M	★ **2852**
			3235-121
	Fairchild	F4085BC	583-194
		F4085BM	583-195
	Panasonic	**MN4085B**	★ **828**
			★ **834**
			584-1
	RCA	**CD4085B**	★ **837**
			584-2
		CD4085BE	★ **837**
			584-3
	SGS	HCC4085B	584-4
		HCF4085B	584-5
	Signetics	**HEF4085B**	★ **864**
			★ **898**
			584-6
		HEF4085BD	★ **864**
			584-7
	SSS	883/4085B	584-8
		SCL4085B	584-9
	Toshiba	TC4085B	584-10
40850	**RCA**	**PA40850**	★ **4824**
			4466-18
4086	Fairchild	F4086BC	584-18
		F4086BM	584-19
	RCA	**CD4086B**	★ **837**
			584-20
		CD4086BE	★ **837**
			584-21
	SGS	HCC4086B	584-22
		HCF4086B	584-23
	Signetics	**HEF4086B**	★ **864**
			★ **898**
			584-24
		HEF4086BD	★ **864**
			584-25
	SSS	883/4086B	584-26
		SCL4086B	584-27
	Toshiba	TC4086B	584-28
4089	National	CD4089BC	593-6
		CD4089BM	593-7
	RCA	**CD4089B**	★ **840**
			593-8
			¶ 250-5
		CD4089BE	★ **840**
			(Continued)
4089	**RCA**	**CD4089BE**	**593-9**
			¶ 250-5
	SGS	HCC4089B	593-10
		HCF4089B	593-11
	TeledyneP	4089-02	2647-50
		4089-03	2647-47
		4089-04	2647-51
		4089-05	2647-48
409	AnalogSys	MF409	3234-129
	Datel	**MVD-409**	★ **2864**
			2622-69
		MVD-409M	★ **2864**
			2622-70
		MXD-409	★ **2864**
			2623-2
		MXD-409M	★ **2864**
			2623-3
	Ferranti	ZN409CE	3238-90
	NEC	uPB409	3768-16
	Signetics	HEF409BD	583-184
4093	Fairchild	F4093BC	593-86
		F4093BM	593-87
	National	CD4093BC	593-93
		CD4093BM	593-94
	Panasonic	**MN4093B**	★ **828**
			593-97
	RCA	**CD4093B**	★ **837**
			593-98
			¶ 251-4
		CD4093BE	★ **837**
			593-99
	SGS	HCC4093B	593-106
		HCF4093B	593-107
	Signetics	**HEF4093B**	★ **864**
			★ **898**
			593-110
		HEF4093BD	★ **864**
			593-111
	SSS	883/4093B	593-112
		SCL4093B	593-113
	Toshiba	TC4093B	593-116
4094	**RCA**	**CD4094B**	★ **838**
			591-53
	RCA	CD4094B	3790-129
	RCA	**CD4094BE**	★ **838**
			591-54
	RCA	CD4094BE	3791-1
	SGS	HCC4094B	591-58
		HCF4094B	591-59
	Signetics	**HEF4094B**	★ **864**
			★ **898**
			591-62
		HEF4094BD	★ **864**
			591-63
	SSS	883/4094B	591-64
			3791-2
		SCL4094B	591-65
			3791-3
	Toshiba	TC4094B	591-66
			3791-4
4095	**RCA**	**CD4095B**	★ **838**
			581-136
		CD4095BE	★ **838**
			581-137
	RCA	HCF4095B	581-140
	SGS	HCC4095B	581-141
4096	**RCA**	**CD4096B**	★ **838**
			581-138
		CD4096BE	★ **838**
			581-139
	Reticon	RL4096	3234-81
	SGS	HCC4096B	581-142
		HCF4096B	581-143
4097	**RCA**	**CD4097B**	★ **839**
			2624-1
		CD4097BE	★ **839**
			2624-2
	SGS	HCC4097B	2624-3
		HCF4097B	2624-4
4098	**RCA**	**CD4098B**	★ **838**
			589-104
		CD4098BE	★ **838**
			589-105
	SGS	HCC4098B	589-110
		HCF4098B	589-111

Arranged alphanumerically from left to right.

© IC MASTER 1984

Base Number	Source	Device	Page-Line
4099	National	CD4099BC	587-53
		CD4099BM	587-54
	RCA	**CD4099B**	★ **838**
			587-61
		CD4099BE	★ **838**
			587-62
	SGS	HCC4099B	587-69
		HCF4099B	587-70
	SSS	883/4099B	587-75
		SCL4099B	587-76
	Toshiba	TC4099B	587-79
40H000	Toshiba	TC40H000	583-122
40H002	Toshiba	TC40H002	585-82
40H004	Toshiba	TC40H004	574-34
40H008	Toshiba	TC40H008	582-157
40H010	Toshiba	TC40H010	583-61
40H011	Toshiba	TC40H011	582-115
40H020	Toshiba	TC40H020	583-12
40H021	Toshiba	TC40H021	582-80
40H027	Toshiba	TC40H027	585-27
40H032	Toshiba	TC40H032	584-116
40H042	Toshiba	TC40H042	578-65
40H051	Toshiba	TC40H051	584-11
40H074	Toshiba	TC40H074	580-85
40H076	Toshiba	TC40H076	582-57
		TC40H076A	582-58
40H107	Toshiba	TC40H107	581-201
		TC40H107A	581-202
40H138	Toshiba	TC40H138	578-184
40H139	Toshiba	TC40H139	578-135
40H147	Toshiba	TC40H147	592-64
40H148	Toshiba	TC40H148	592-65
40H151	Toshiba	TC40H151	588-182
40H153	Toshiba	TC40H153	588-63
40H155	Toshiba	TC40H155	578-141
40H157	Toshiba	TC40H157	588-100
40H158	Toshiba	TC40H158	588-119
40H160	Toshiba	TC40H160	576-127
40H161	Toshiba	TC40H161	574-111
40H162	Toshiba	TC40H162	576-88
40H163	Toshiba	TC40H163	574-75
40H164	Toshiba	TC40H164	591-113
40H166	Toshiba	TC40H166	591-88
40H174	Toshiba	TC40H174	580-187
40H175	Toshiba	TC40H175	580-153
40H192	Toshiba	TC40H192	576-179
40H193	Toshiba	TC40H193	574-171
40H194	Toshiba	TC40H194	591-67
40H240	Toshiba	TC40H240	594-35
40H241	Toshiba	TC40H241	594-70
40H244	Toshiba	TC40H244	593-188
40H245	Toshiba	TC40H245	594-162
40H259	Toshiba	TC40H259	587-80
40H273	Toshiba	TC40H273	581-13
40H365	Toshiba	TC40H365	573-80
40H366	Toshiba	TC40H366	573-28
40H367	Toshiba	TC40H367	573-81
40H373	Toshiba	TC40H373	586-180
40H374	Toshiba	TC40H374	581-128
40H375	Toshiba	TC40H375	586-44
40H386	Toshiba	TC40H386	585-167
40H393	Toshiba	TC40H393	575-39
40HC390			
	Toshiba	TC40HC390	577-60
40L44	TI	TMS40L44-12	3780-18
		TMS40L44-20	3780-44
		TMS40L44-25	3780-67
		TMS40L44-45	3780-128
41	**Burr-Brown**	**UAF41**	★ **2852**
			3232-15
410	AnalogSys	MH410	3237-173
	Barvon	**BC410**	★ **4626**
			4464-10
			4466-14
	Datel	**AM-410-2C**	★ **2864**
			3189-5
		AM-410-2M	★ **2864**
			3188-4
	Intronics	C410	3232-113
	Motorola	**MVME410**	★ **2044**
	National	**COP410C**	★ **1526**
			1338-68
	National	COP410C	1259-23
	National	**COP410L**	★ **1526**
			1338-69
	National	COP410L	1259-24
			(Continued)

Base Number	Source	Device	Page-Line
410	Siemens	SAJ410	3167-68
	Telefunken	U410	3164-123
410,30,90			
	CompAuto	410,30,90	1809-15
4100	CalDevices	HCS4100	4463-15
	LSILogic	**LC4100**	★ **4762**
			4468-19
	Sanyo	LA4100	3164-100
	Telmos	TM4100	4467-34
41000	**RCA**	**PA41000**	★ **4824**
			4466-19
4101	AppMicroTech		
		ST4101	1955-26
	Lambda	LPD4101	2682-67
	Sanyo	LA4101	3164-101
4102	AppMicroTech		
		ST4102	1957-5
	Lambda	LPD4102	2682-68
	Sanyo	LA4102	3164-102
	Solitron	CM4102	577-63
4103	Lambda	LPD4103	2682-69
4104	**Burr-Brown**	**4104**	★ **2852**
	Fairchild	F4104BE	592-30
		F4104BM	592-31
	Lambda	LPD4104	2682-70
	Mostek	MK4104-3	3780-38
		MK4104-33	3780-39
		MK4104-34	3780-58
		MK4104-35	3780-90
		MK4104-4	3780-59
		MK4104-5	3780-91
		MK4104-6	3780-105
		MKB4104-84	3780-60
		MKB4104-85	3780-92
		MKB4104-86	3780-106
	NEC	uPD4104	3780-97
		uPD4104-1	3780-65
		uPD4104-2	3780-42
	Signetics	**HEF4104B**	★ **864**
			★ **898**
			592-32
4105	Lambda	LPD4105	2681-41
4106	Lambda	LPD4106	2681-31
411	**Datel**	**AM-411-2C**	★ **2864**
			3189-6
		AM-411-2M	★ **2864**
			3188-5
	Intronics	C411	3232-114
	National	**COP411C**	★ **1526**
			1338-70
	National	COP411C	1259-25
	National	**COP411L**	★ **1526**
			1338-71
	National	COP411L	1259-26
		LF411	3190-20
		LF411A	3186-7
	NEC	uPD411	3768-46
		uPD411-1	3768-44
		uPD411-2	3768-35
		uPD411-3	3768-27
		uPD411-4	3768-21
		uPD411A	3768-47
		uPD411A-1	3768-45
		uPD411A-2	3768-36
	Telefunken	U411	3164-124
4110	Sanyo	LA4110	3164-103
	TI	TCM4110	3216-123
4111	Fujitsu	MB4111	2681-18
4112	Fujitsu	MB4112	2681-19
	IntlMicCir	G4112	4471-14
	Sanyo	LA4112	3164-104
4115	**Burr-Brown**	**4115/04**	★ **2852**
			3232-102
4116	Fairchild	F4116-2	3768-85
		F4116-3	3768-102
		F4116-4	3769-5
	ITT	ITT4116-2	3768-87
		ITT4116-3	3768-104
		ITT4116-4	3769-7
	Mostek	MK4116-2	3768-89
			¶ 268-8
			¶ 277-10
			¶ 319-6
			¶ 320-14
			¶ 320-16
			¶ 322-12
			(Continued)

Base Number	Source	Device	Page-Line
4116	Mostek	MK4116-2	¶ 322-14
			¶ 323-11
			¶ 323-15
		MK4116-3	3768-106
			¶ 268-8
			¶ 277-10
			¶ 319-6
			¶ 320-14
			¶ 320-16
			¶ 322-12
			¶ 322-14
			¶ 323-11
			¶ 323-15
		MK4116-4	3769-8
			¶ 268-8
			¶ 277-10
			¶ 319-6
			¶ 320-14
			¶ 320-16
			¶ 322-12
			¶ 322-14
			¶ 323-11
			¶ 323-15
		MKB4116-82	3768-90
		MKB4116-83	3768-107
		MKB4116-84	3769-9
	Motorola	**MCM4116B-15**	★ **4046**
			3768-91
			¶ 320-10
			¶ 322-15
			¶ 322-16
		MCM4116B-20	★ **4046**
			3768-108
			¶ 320-10
			¶ 322-15
			¶ 322-16
		MCM4116B-25	★ **4046**
			3769-10
			¶ 320-10
			¶ 322-15
			¶ 322-16
		MCM4116B-30	★ **4046**
			3769-18
			¶ 320-10
			¶ 322-15
			¶ 322-16
	SGS	M4116	3768-95
	Siemens	HYB4116-3	3768-112
		HYB4116-4	3769-13
		HYB4116-P2	3768-96
		HYB4116-P3	3768-113
	Solitron	CM4116A	2617-76
		CM4116AE	2617-77
	TI	TMS4116-15	3768-97
			¶ 322-18
		TMS4116-20	3769-1
			¶ 322-18
		TMS4116-25	3769-14
			¶ 322-18
4118	Mostek	MK4118A-1	3777-71
		MK4118A-2	3777-80
		MK4118A-3	3777-89
		MK4118A-4	3777-96
412	National	LF412	3205-55
		LF412A	3204-53
	Siliconix	DF412	2662-148
4120	Sanyo	LA4120	3165-78
41200	**RCA**	**PA41200**	★ **4824**
			4466-20
4125	Sanyo	LA4125	3165-79
		LA4125T	3165-80
41256	Toshiba	TMM41256-12	3770-8
		TMM41256-15	3770-15
4126	Sanyo	LA4126	3164-105
	Telmos	TM4126	4467-35
4127	**Burr-Brown**	**4127**	★ **2852**
			3155-128
4131	Burr-Brown	4131	3238-151
	Raytheon	RC4131	3196-26
		RM4131	3191-11
4132	Raytheon	RC4132	3195-44
		RM4132	3193-6
4136	**Exar**	**XR4136C**	★ **3378**
			3212-47
			¶ 292-5
		XR4136M	★ **3378**
			(Continued)

Base Number	Source	Device	Page-Line
4136	**Exar**	**XR4136M**	**3211-51**
			¶ 292-5
	Fairchild	uA4136C	3212-48
		uA4136M	3211-52
	MicrePwr	**MP4136**	★ **3529**
			3211-53
		MP4136C	★ **3529**
			3212-49
	Raytheon	RC4136	3212-50
		RM4136	3211-54
	SiliconG	SG4136	3212-51
		SG4136C	3212-52
	TI	RC4136	3212-53
4137	NEC	MC4137	3216-147
	Sanyo	LA4137	3164-106
4138	NEC	MC4138	3216-148
	Sanyo	LA4138	3164-107
414	Ferranti	ZN414	3167-124
4140	Sanyo	LA4140	3164-156
	TeledyneP	4140	2627-39
4143	TeledyneP	4143	2627-40
		4143-01	2627-41
4144	TeledyneP	4144	2629-50
4145	TeledyneP	4145	2634-11
4146	TeledyneP	4146	2636-3
415	**Barvon**	**BC415**	★ **4626**
			4464-11
			4466-15
4151	**Exar**	**XR4151**	★ **3385**
			3239-59
			¶ 309-13
		XR4151C	★ **3385**
			3233-115
			¶ 309-13
		XR4151M	★ **3385**
			3233-116
			¶ 309-13
	Raytheon	RC4151	3233-129
			¶ 283-2
			¶ 283-15
			¶ 284-12
		RM4151	3233-132
			¶ 283-2
			¶ 284-12
4152	Raytheon	RC4152	3233-130
			¶ 283-15
		RM4152	3233-133
4153	Raytheon	RC4153	3233-131
			¶ 283-15
		RM4153	3233-134
4156	**Harris**	**HA-4156-5**	★ **3424**
			3211-41
	Raytheon	RC4156	3211-42
		RM4156	3210-55
4157	Raytheon	RC4157	3211-1
		RM4157	3211-2
416	**NEC**	**μPD416**	★ **4073**
			3769-19
		μPD416-1	★ **4073**
			3769-12
		μPD416-2	★ **4073**
			3768-111
		μPD416-3	★ **4073**
			3768-94
		μPD416-5	★ **4073**
			3768-78
	Telefunken	U416	3168-16
	Toshiba	TMM416-2	3768-98
		TMM416-3	3769-2
		TMM416-4	3769-15
4160	**IntlMicCir**	**G4160**	★ **4747**
			4471-15
	SSS	883/4160B	576-122
		SCL4160B	576-123
4161	SSS	883/4161B	574-108
		SCL4161B	574-109
	TeledyneP	4161	2633-44
	TI	**TMS4161**	★ **4214**
			3769-87
4162	SSS	883/4162B	576-83
		SCL4162B	576-84
	TeledyneP	4162	2633-45
4163	SSS	883/4163B	574-72
		SCL4163B	574-73
	TeledyneP	4163	2633-46

¶ Indicates page number in Application Note Directory.
★ Indicates addition data is provided on the page noted.

Base Number	Source	Device	Page-Line
4164	Fairchild	F4164	3769-35
		F4164-12	3769-41
		F4164-15	3769-59
		F4164-20	3769-88
	ITT	ITT4164-15	3782-112
		ITT4164-20	3782-113
	National	NMC4164-12	3769-53
			¶ 321-12
		NMC4164-15	3769-78
			¶ 321-12
		NMC4164-20	3769-104
			¶ 321-12
	NEC	**μPD4164-0**	**★4077**
			3769-105
		μPD4164-1	**★4077**
			3769-115
		μPD4164-12	**★4077**
			3769-54
		μPD4164-15	**★4077**
			3769-79
		μPD4164-2	**★4077**
			3769-40
		μPD4164-20	**★4077**
			3769-106
		μPD4164-3	**★4077**
			3769-80
	Panasonic	**MN4164-15**	**★4120**
			3769-82
		MN4164-20	**★4120**
			3769-108
	Siemens	HYB4164-2	3769-83
		HYB4164-3	3769-109
	TeledyneP	4164	2633-47
	TI	**SMJ4164-12**	**★4219**
			3769-56
		SMJ4164-15	**★4219**
			3769-84
		SMJ4164-20	**★4219**
			3769-110
		TMS4164-12	**★ 543**
			★4219
			3769-57
			¶ 320-7
			¶ 320-8
			¶ 320-9
			¶ 322-18
			¶ 322-19
			¶ 322-20
			¶ 323-2
		TMS4164-15	**★ 543**
			★4219
			3769-85
			¶ 320-7
			¶ 320-8
			¶ 320-9
			¶ 322-18
			¶ 322-19
			¶ 322-20
			¶ 323-2
		TMS4164-20	**★ 543**
			★4219
			3769-111
			¶ 320-7
			¶ 320-8
			¶ 320-9
			¶ 322-18
			¶ 322-19
			¶ 322-20
			¶ 323-2
		TMS4164-25	**★ 543**
			★4219
			3769-116
			¶ 320-7
			¶ 320-8
			¶ 320-9
			¶ 322-18
			¶ 322-19
			¶ 322-20
			¶ 323-2
	Toshiba	TMM4164-2	3769-58
		TMM4164-3	3769-86
		TMM4164-4	3769-112
4165	TeledyneP	4165	2633-48
417	Telefunken	U417	3168-17
4170	Sanyo	LA4170	3164-2
4174	SSS	883/4174B	580-182
		SCL4174B	580-183
4175	Sanyo	LA4175	3164-3
4177	Sanyo	LA4177	3164-4
418	Telefunken	U418	3168-18
4180	Sanyo	LA4180	3164-108
	Telefunken	TDA4180	3155-48
			¶ 304-5
4182	Sanyo	LA4182	3164-109
4191	**Raytheon**	**RC4191**	**★3588**
			3230-84
	Raytheon	RM4191	3230-87
4192	**Raytheon**	**RC4192**	**★3588**
			3230-85
	Raytheon	RM4192	3230-88
	SSS	883/4192B	576-172
		SCL4192B	576-174
4193	**Raytheon**	**RC4193**	**★3576**
			★3588
			3230-86
			¶ 312-13
	Raytheon	RM4193	3230-89
	SSS	883/4193B	574-166
		SCL4193B	574-168
4194	Exar	XR4194M	3230-18
	MCE	MCE4194	3230-19
	Raytheon	RC4194	3230-20
		RM4194	3230-21
	SiliconG	SG4194	3230-22
		SG4194C	3230-23
4195	Exar	XR4195	3228-9
	Raytheon	RC4195	3228-14
		RM4195	3228-15
42	**Burr-Brown**	**VFC42**	**★2849**
			3233-105
			3239-53
		VFC42M	**★2849**
			3233-106
			3239-54
	FujitsuA	**FBM42DA**	**★3941**
			3768-11
	Hitachi	HMCS42	1338-107
			1259-2
		HMCS42C	1259-3
		HMSC42C	1338-116
	TeledyneC	CAG42	2616-14
420	**Barven**	**BC420**	**★4626**
			4464-12
			4466-16
	Motorola	**MVME420**	**★2044**
	National	COP420	1338-72
			1259-27
		COP420L	1338-73
			1259-28
		COP420R	1338-48
			1338-90
			1259-29
	PMI	**OP-420B**	**★3566**
			3180-99
		OP-420C	**★3566**
			3180-100
		OP-420F	**★3566**
			3180-101
		OP-420G	**★3566**
			3180-102
4200	Mitel	MA4200	4463-33
	Raytheon	RC4200	3235-85
			¶ 309-5
		RC4200A	3235-86
			¶ 309-5
	Sanyo	LA4200	3164-110
	Siemens	TDA4200	3168-49
	Western	WD4200	1265-26
4201	Sanyo	LA4201	3164-111
4202	**Exar**	**XR4202**	**★3378**
			3210-6
			¶ 292-5
		XR4202M	**★3378**
			3210-7
			¶ 292-5
	Motorola	MC4202	3211-47
	Sprague	UCN-4202A	3235-20
			¶ 288-4
			¶ 288-13
42022	Hitachi	HC42022	3167-10
4203	**Burr-Brown**	**4203**	**★2852**
			3235-68
		4203S	**★2852**
			3235-69
	Sprague	UCN-4203A	3235-21
42030	Hitachi	HC42030	3167-11
4204	**Burr-Brown**	**4204**	**★2852**
			3235-70
		4204S	**★2852**
			3235-71
	Fujitsu	MB4204	3163-4
	TI	TCM4204	3218-93
4205	**Burr-Brown**	**4205**	**★2852**
			3235-72
		4205S	**★2852**
			3235-73
	TI	TCM4205	3218-94
42050	Micropac	42050-055	3222-18
		42050-109	3223-43
		42050-128	3224-8
		42050-148	3224-17
		42050-158	3224-107
		42050-168	3224-111
		42050-188	3225-33
		42050-208	3225-59
		42050-224	3225-61
		42050-244	3225-118
		42050-264	3225-120
		42050-284	3225-123
		42050-304	3225-125
		42050-324	3225-127
		42050-344	3225-129
		42050-510	3222-24
		42050-610	3222-75
		42050-710	3222-82
42051	Micropac	42051	3228-4
		42051-055	3226-56
		42051-065	3226-84
		42051-075	3226-85
		42051-085	3226-106
		42051-095	3226-107
		42051-105	3226-109
		42051-124	3227-23
		42051-144	3227-24
		42051-154	3227-74
		42051-164	3227-78
		42051-184	3227-96
		42051-204	3227-110
		42051-223	3227-111
		42051-243	3227-120
		42051-263	3227-121
		42051-283	3227-123
		42051-303	3227-124
		42051-323	3227-126
		42051-363	3227-129
42055	Micropac	42055-1020	3223-44
		42055-1216	3224-11
		42055-1416	3224-18
		42055-1516	3224-110
		42055-1612	3224-112
		42055-1812	3225-34
		42055-2010	3225-60
		42055-2210	3225-62
		42055-2410	3225-119
		42055-2608	3225-121
		42055-2808	3225-124
		42055-520	3222-28
		42055-620	3222-76
		42055-720	3222-83
		42055-820	3223-13
		42055-920	3223-28
	Toshiba	42055-1812	3225-35
4206	**Burr-Brown**	**4206**	**★2852**
			3235-74
4207	TI	TCM4207	3218-95
4209	Siemens	SAB4209	3169-51
421	National	COP421	1338-74
		COP421L	1338-75
	NEC	uPD421	3777-100
		uPD421-1	3777-97
		uPD421-2	3777-95
		uPD421-3	3777-88
		uPD421-5	3777-79
	PMI	**OP-421B**	**★3566**
			3210-29
		OP-421C	**★3566**
			(Continued)
421	**PMI**	**OP-421C**	**3211-5**
		OP-421F	**★3566**
			3210-30
		OP-421G	**★3566**
			3211-6
		OP-421H	**★3566**
			3212-41
4210	Western	WD4210	1265-27
4212	**Exar**	**XR4212**	**★3378**
			3165-180
		XR4212C	**★3378**
			3212-44
		XR4212M	**★3378**
			3211-48
4213	**Burr-Brown**	**4213**	**★2852**
			★2853
			3235-75
		4213S	**★2852**
			★2853
			3235-76
		4213U	**★2852**
			★2853
			3235-77
		4213V	**★2852**
			★2853
			3235-78
		4213W	**★2852**
			★2853
			3235-79
4214	**Burr-Brown**	**4214**	**★2852**
			3235-80
		4214M	**★2852**
			3235-81
42148	Cypress	C42148-25	3775-68
		C42148-35	3775-79
		C42148-45	3775-86
		C42148-55	3775-102
422	National	LF422A	3204-46
4220	**IntMicCir**	**G4220**	**★4747**
			4471-17
	Sanyo	LA4220	3164-112
423	Ferranti	ZN423	3236-80
4230	Sanyo	LA4230	3164-157
424	Ferranti	ZN424	3199-16
			¶ 293-14
	Inmos	T424	1289-8
	National	**COP424C**	**★1527**
			1259-30
4242	Inmos	T4242	1352-77
4244	AMD	AM4244C	3780-79
42468	Motorola	SC42468	2679-15
425	Ferranti	ZN425E-6	2638-33
			¶ 280-7
		ZN425E-7	2638-39
			¶ 280-7
		ZN425E-8	2642-51
			¶ 280-7
		ZN425J-8	2642-52
			¶ 280-7
	Fujitsu	MB425	1344-88
	National	**COP425C**	**★1527**
			1259-31
4250	Harris	LM4250	3190-50
		LM4250C	3195-31
	Intersil	ICL4250	3193-2
		ICL4250C	3195-32
	National	LM4250	3193-3
		LM4250C	3195-33
	NEC	uPC4250C	3198-33
	Panasonic	**AN4250**	**★3556**
	Sanyo	LA4250	3164-158
	SiliconG	SG4250	3193-4
		SG4250C	3195-34
	Solitron	UC4250	3193-5
		UC4250C	3195-35
4256	TI	**TMS4256-10**	**★4212**
			3769-130
		TMS4256-12	**★4212**
			3770-6
		TMS4256-15	**★4212**
			3770-13
		TMS4256-20	**★4212**
			3770-19
4257	TI	**TMS4257-10**	**★4212**
			3769-131
		TMS4257-12	**★4212**
			(Continued)

Arranged alphanumerically from left to right.

Base Number	Source	Device	Page-Line
4257	TI	**TMS4257-12**	**3770-7**
		TMS4257-15	**★4212**
			3770-14
		TMS4257-20	**★4212**
			3770-20
42584	Motorola	SC42584	2679-17
42585	Motorola	SC42585	2679-18
426	Ferranti	ZN426E-6	2638-30
		ZN426E-7	2638-37
		ZN426E-8	2641-32
		ZN426J-8	2641-33
	Fujitsu	MB426	1344-89
	Intersil	DG426A	2620-68
	TeledyneS	**TSC426**	**★3091**
4260	Siemens	SDA4260	3170-41
4264	AMI	S4264	587-174
			3786-1
	IntlMicCir	**G4264**	**★4747**
			4471-19
	MicronTech	MT4264-15A	3769-71
		MT4264-20A	3769-97
	NEC	MC4264	3217-82
4265	MicronTech	MT4265-12A	3769-50
427	Analogic	AH427	3155-116
	Datel	**AM-427-A**	**★2864**
			3183-23
		AM-427-B	**★2864**
			3181-43
		AM-427-M	**★2864**
			3183-24
	Ferranti	ZN427E-8	2626-54
			¶ 282-7
			¶ 283-10
		ZN427J-8	2626-55
			¶ 282-7
			¶ 283-10
	TeledyneS	**TSC427**	**★3091**
428	Ferranti	ZN428E-8	2641-29
			¶ 282-7
			¶ 283-10
		ZN428J-8	2641-30
			¶ 282-7
			¶ 283-10
	TeledyneS	**TSC428**	**★3091**
4280	Siemens	TDA4280T/U	3172-8
4281	Siemens	TDA4281T/U	3172-9
429	Ferranti	ZN429E-7	2638-38
		ZN429E-8	2641-34
		ZN429J-8	2641-35
	Intersil	DG429A	2620-45
	NEC	uPB429	3768-17
4290	**NEC**	**MC4290**	**★3549**
			2681-24
	Siemens	TDA4290-5	3164-29
43	**FujitsuA**	**FBM43DA**	**★3941**
			3768-10
	Hitachi	HMCS43	1338-108
			1259-4
		HMCS43C	1338-109
			1259-5
	Toshiba	TLCS-43	1338-132
430	**Datel**	**AM-430**	**★2864**
			3176-22
		AM-430A	**★2864**
			3187-26
		AM-430B	**★2864**
			3184-49
		AM-430M	**★2864**
			3176-23
			3187-27
	National	COP430	1338-99
	TI	TL430C	3228-42
4300	Motorola	MC4300	628-32
			2684-2
	Motorola	**MC4300Series**	**★820**
	Signetics	**SMVME4300**	**★2052**
	Toshiba	TMP4300C	1265-24
4301	**Burr-Brown**	**4301**	**★2852**
			3235-24
			¶ 309-6
4302	**Burr-Brown**	**4302**	**★2852**
			3235-25
43032	Hitachi	HC43032	3167-12
4304	Motorola	MC4304	626-173
			3770-67
4305	Motorola	MC4305	626-174
			3770-68
4306	Motorola	MC4306	612-22
4307	Motorola	MC4307	612-117
	National	NSM4307	2663-5
4308	Motorola	MC4308	639-6
431	Fairchild	uA431	3228-91
	Motorola	**TL431C**	**★3535**
			3228-92
		TL431M	**★3535**
			3228-93
	National	COP431	1338-100
	TI	TL431C	3228-94
		TL431M	3228-95
4310	Motorola	MC4310	637-125
43115	Hitachi	HD43115	3166-77
4312	**IntlMicCir**	**G4312**	**★4747**
			4471-20
	Motorola	MC4312	631-87
			3789-18
43128	Hitachi	HN43128	3787-44
			3787-45
4315	Hitachi	HM4315	3780-111
4316	Motorola	MC4316	611-145
			¶ 310-5
4317	Motorola	MC4317	611-146
4318	Motorola	MC4318	611-139
4319	Motorola	MC4319	611-140
432	Ferranti	ZN432BJ-10	2629-35
			¶ 283-11
		ZN432CJ-10	2629-36
			¶ 283-11
		ZN432E-10	2629-37
			¶ 283-11
		ZN432J-10	2629-38
			¶ 283-11
	DDC	ZN432CK-10	2629-39
		ZN432K-10	2629-40
	Intel	iAPX432	1289-9
		iAPX432GDP	1285-21
		iAPX432IP	1285-22
	National	COP432	1338-101
	PMI	**OP-432**	**★3570**
	Sprague	UHC/D-432	614-18
			2683-63
		UHP-432	614-22
			2683-67
4320	Mitel	MT4320	3217-38
	TI	TP4320A	589-66
	Western	WD4320	1265-28
43201	Intel	iAPX43201	1352-79
43202	Intel	iAPX43202	1352-80
43203	Intel	iAPX43203	1352-82
43204	Intel	iAPX43204	1352-81
43205	Intel	iAPX43205	1352-83
4321	Motorola	MC4321	603-36
	Western	WD4321	1265-29
4322	Mitel	MT4322	3217-39
	Motorola	MC4322	603-37
4323	Mitel	MT4323	3217-40
4324	Motorola	MC4324	631-20
			¶ 258-16
			¶ 310-5
			3215-31
			¶ 258-16
			¶ 310-5
4325	Mitel	MT4325	3217-41
4326	Mitel	MT4326	3217-42
4327	Mitel	MT4327	3217-43
433	Ferranti	ZN433BJ-10	2629-6
		ZN433CJ-10	2629-7
		ZN433J-10	2629-8
	DDC	ZN433BJ-9	2628-47
		ZN433CJ-9	2628-48
		ZN433CK-10	2629-9
		ZN433J-9	2628-49
		ZN433K-10	2629-10
	Intersil	DG433A	2615-125
	Sanyo	STK433	3165-91
	Sprague	UHC/D-433	614-19
			2683-64
		UHP-433	614-23
			2683-68
4330	Mitel	MD4330B	591-183
			2664-11
			(Continued)
4330	Mitel	MD4330B	3791-37
	Plessey	MV4330	591-184
4331	Siemens	TBB4331	3213-42
4332	Mitel	MD4332B	591-189
	Mostek	MK4332D-3	3769-29
			¶ 322-14
		MKM4332-83	3769-30
		MKM4332-84	3769-31
	Plessey	MV4332	591-190
	Sanyo	STK4332	3164-164
4334	Hitachi	HM4334-3	3776-104
		HM4334-4	3777-11
4335	Siemens	TBE4335	3213-43
434	Ferranti	ZN434E	2638-1
	Intersil	DG434A	2616-27
	National	COP434	1338-102
4340	**Burr-Brown**	**4340**	**★2852**
			3237-154
4341	**Burr-Brown**	**4341**	**★2852**
			3237-155
4344	Motorola	MC4344	637-74
			¶ 258-16
			¶ 310-5
			3214-57
			¶ 258-16
			¶ 310-5
435	Ferranti	ZN435E	2642-53
		ZN435J	2642-54
	Motorola	**MVME435**	**★2044**
	Sanyo	STK435	3165-92
4350	Motorola	MC4350	611-167
435101	Hitachi	HM435101	588-26
		HM435101-1	3773-81
4352	Sanyo	STK4352	3164-165
4355	Motorola	MC4355	609-122
4356	Motorola	MC4356	603-4
4362	Sanyo	STK4362	3164-166
4364	**IntlMicCir**	**G4364**	**★4747**
			4471-21
437	Ferranti	ZN437E	2626-42
		ZN437J	**2626-43**
	Sanyo	STK437	3165-107
4372	Sanyo	STK4372	3165-52
438	Ferranti	ZN438	2639-4
	National	**COP438**	**1338-103**
43802	Hitachi	HC43802	3167-13
43803	Hitachi	HC43803	3167-14
43850	Hitachi	HC43850	3167-7
43890	Hitachi	HD43890	3166-78
439	Intersil	DG439A	2620-115
	Sanyo	STK439	3165-108
4391	**Raytheon**	**RC4391**	**★3576**
4392	Sanyo	STK4392	3165-53
44	Hitachi	HMCS44A	1338-110
			1259-6
		HMCS44C	1338-111
			1259-7
	Wintek	**MDS44**	**★2062**
440	Ferranti	ZN440CJ	2625-14
	Fujitsu	**C440H**	**★4639**
			4464-13
	Intersil	DG440A	2620-28
	National	COP440	1338-76
			1259-32
		COP440R	1338-49
			1338-91
			1261-1
		TBA440	3172-120
		TDA440	3172-124
	Plessey	SL440	3173-54
			3235-5
			¶ 311-5
		TDA440	3172-134
	Siemens	TCA440	3167-113
	Telefunken	TDA440	3172-159
4400	Telefunken	TDA4400	3172-160
44007	Hitachi	HD44007	3170-52
4401	Sprague	UCN-4401A	2682-144
		UCS-4401H	2679-8
			2682-145
			¶ 288-11
44010	Hitachi	HD44010	3166-123
4402	SSS	883/4402B	586-17
		SCL4402B	586-18
	Solitron	883/4402B	585-105
		SCL4402B	585-108
4404	SSS	883/4404B	575-84
		SCL4404B	575-85
441	Intersil	DG441A	2615-104
	National	COP441	1338-77
			1261-2
		LF441	3195-9
		LF441A	3186-6
	Plessey	SL441	3239-96
	Sanyo	STK441	3165-109
	TI	TL441M	3155-132
4410	Telefunken	TDA4410	3172-161
4412	SSS	883/4412B	582-166
		SCL4412B	582-167
4416	SSS	883/4416B	2617-58
		SCL4416B	2617-59
	TI	**SMJ4416-15**	**★4220**
			3769-24
		SMJ4416-20	**★4220**
			3769-26
		TMS4416-15	**★4220**
			3769-25
			¶ 323-1
			¶ 323-2
		TMS4416-20	**★4220**
			3769-27
			¶ 323-1
			¶ 323-2
		TMS4416-25	**★4220**
			3769-28
			¶ 323-1
			¶ 323-2
442	Ferranti	ZN442E	2629-33
		ZN442J	2629-34
	Intersil	DG442A	2620-121
	National	COP442	1338-78
			1261-3
		LF442	3206-44
		LF442A	3204-47
	TI	TL442M	3232-74
4420	**IntlMicCir**	**G4420**	**★4747**
			4471-23
	Sanyo	LA4420	3164-159
	SGS	TDA4420	3172-146
	Telefunken	TDA4420	3172-162
4421	Telefunken	TDA4421	3172-163
4422	Sanyo	LA4422	3164-160
	Telefunken	TDA4422	3172-164
4423	**Burr-Brown**	**4423**	**★2852**
			3235-95
4426	SSS	883/4426AB	575-191
		SCL4426AB	575-193
4428	SSS	883/4428B	578-144
		SCL4428B	578-145
443	Intersil	DG443A	2618-65
	Plessey	SL443	3239-97
	Sanyo	STK443	3165-93
4430	Sanyo	LA4430	3164-113
	Telefunken	TDA4430	3172-165
4431	SGS	TDA4431	3171-48
	Telefunken	TDA4431	3172-166
4432	Telefunken	TDA4432	3172-167
4433	SGS	TDA4433	3172-147
	SSS	883/4433AB	576-8
		SCL4433AB	576-10
444	Intech	VDAC444	2638-4
			1353-31
	Intersil	DG444A	2618-40
	National	**COP444C**	**★1527**
			1261-4
		COP444L	**★1527**
			1338-79
	National	COP444L	1261-5
	National	**COP444LR**	**★1527**
			1338-50
			1338-92
	National	COP444LR	1261-6
		LF444	3213-12
		LF444A	3211-16
	NEC	uPD444-3	3776-45
		uPD444/6514	3777-13
		uPD444/6514-1	3776-107
		uPD444/6514-2	3776-87
		uPD444/6514-3	3776-46

¶ Indicates page number in Application Note Directory.
★ Indicates addition data is provided on the page noted.

Base Number	Source	Device	Page-Line
4440	Sanyo	LA4440	3164-161
	Telefunken	TDA4440	3172-168
	Thomson-CSF		
		EF4440	2685-8
			¶ 266-11
4441	SSS	883/4441UB	572-26
		SCL4441UB	572-27
4442	Thomson-CSF		
		EF4442	2685-11
			¶ 266-11
4443	Thomson-CSF		
		EF4443	3235-14
4444	Raytheon	RC4444	2622-61
			3216-133
		RM4444	2622-62
			3216-134
4445	SSS	883/4445B	590-31
		SCL4445B	590-32
4446	SSS	883/4446B	592-109
			3214-49
		SCL4446B	592-111
			¶ 310-11
			3214-51
4449	SSS	883/4449UB	574-26
		SCL4449UB	574-28
445	Dionics	DI445	2679-51
	Intersil	DG445A	2620-106
	National	**COP445C**	★ **1527**
			1261-7
		COP445L	★ **1527**
			1338-80
	National	COP445L	1261-8
	NEC	uPD445L	588-44
			3777-14
		uPD445L-1	3777-49
	Plessey	SL445A	3235-137
4450	Telefunken	TDA4450	3172-169
446	Dionics	DI446	2679-54
	Intersil	DG446A	2618-24
	NEC	**μPD446**	★ **4090**
			3779-27
		μPD446-1	★ **4090**
			3779-10
		μPD446-2	★ **4090**
			3778-108
		μPD446-3	★ **4090**
			3778-66
	Plessey	SL446	3239-98
4460	Sanyo	LA4460	3165-27
4461	Sanyo	LA4461	3165-28
4464	**TI**	**TMS4464-10**	★ **4213**
			3769-117
		TMS4464-12	★ **4213**
			3769-118
		TMS4464-15	★ **4213**
			3769-119
		TMS4464-20	★ **4213**
			3769-120
447	Ferranti	ZN447E	2625-33
		ZN447J	2625-34
	DDC	ZN447E-8	2625-29
		ZN447J-8	2625-30
4470	Hitachi	HD4470	1338-105
			1257-38
44790	Hitachi	HD44790	1338-106
			1259-1
448	Ferranti	ZN448E	2626-45
		ZN448E-8E	2626-46
		ZN448J	2626-47
4480	**IntlMicCir**	**G4480**	★ **4747**
			4471-24
449	Ferranti	ZN449E	2628-10
		ZN449J	2628-11
	DDC	ZN449E-8	2628-7
		ZN449J-8	2628-8
	NEC	**μPD449**	★ **4093**
			3779-28
		μPD449-1	★ **4093**
			3779-11
		μPD449-2	★ **4093**
			3778-109
		μPD449-3	★ **4093**
			3778-67
45	**Fairchild**	**PEP-45**	★ **1910**
			1965-20
	Hitachi	HMCS45A	1338-112
			(Continued)

Base Number	Source	Device	Page-Line
45	Hitachi	HMCS45A	1259-8
		HMCS45C	1338-113
			1259-9
	TeledyneC	CAG45A	2616-15
	Wintek	**MCL45**	★ **2062**
			1959-19
	Wintek	MCV45	1959-20
450	Burr-Brown	CS-450	1809-11
	Cherry	CS450	3234-113
		IC450	3198-42
	Datel	**AM-450-2**	★ **2864**
			3200-14
		AM-450-2M	★ **2864**
			3200-15
	Ferranti	ZN450	2637-28
	Intersil	MM450	2622-19
	NEC	uPB450	4482-69
	TeledyneS	TSC450C	2682-60
		TSC450M	2682-61
4500	Motorola	TCA4500	3168-132
	National	LM4500A	3168-137
	Siemens	TCA4500A	3168-152
	Signetics	TDA4500	3171-149
	TI	**TMS4500A**	★ **4221**
			2680-109
			¶ 317-9
			¶ 317-10
			¶ 317-11
	VTI	**VL4500A**	★ **4254**
			2680-110
4501	Mostek	MK4501-12	3757-69
		MK4501-15	3757-68
		MK4501-20	3757-67
	National	CD4501BC	2623-39
		CD4501BM	2623-40
	SiliconG	SG4501	3228-18
			3230-17
	Toshiba	TC4501B	586-4
4502	**RCA**	**CD4502B**	★ **837**
			572-62
		CD4502BE	★ **837**
			572-63
	SGS	HCC4502B	572-64
		HCF4502B	572-65
	Signetics	**HEF4502B**	★ **864**
			★ **898**
			572-66
		HEF4502BD	★ **864**
			572-67
	SSS	883/4502B	572-68
		SCL4502B	572-69
	Toshiba	TC4502B	572-70
4503	National	CD4503BC	573-46
		CD4503BM	573-47
	Panasonic	**MN4503B**	★ **828**
			★ **834**
			573-56
	RCA	**CD4503BD**	★ **837**
			573-59
		CD4503BE	★ **837**
			573-60
	Toshiba	TM4503	3173-67
4505	**Signetics**	**HEF4505**	★ **864**
			587-140
	Signetics	HEF4505	3771-81
	Signetics	**HEF4505B**	★ **864**
			★ **898**
			587-141
4507	National	CD4507BC	585-125
		CD4507BM	585-126
		NSM4507	2663-6
4508	**RCA**	**CD4508B**	★ **838**
			586-29
		CD4508BE	★ **838**
			586-30
	SGS	HCC4508B	586-31
	Signetics	**HEF4508B**	★ **864**
			★ **898**
			586-33
		HEF4508BD	★ **864**
			586-34
	SSS	883/4508B	586-35
		SCL4508B	586-36
	Solitron	CM4508	586-37
	Toshiba	TC4508B	586-40

Base Number	Source	Device	Page-Line
451	Ferranti	ZN451	2637-29
	Intersil	DG451A	2615-107
		MM451	2621-97
	NEC	uPC451	3180-49
4510	Fairchild	F4510BC	576-135
		F4510BM	576-136
	National	CD4510BC	576-145
		CD4510BM	576-146
	RCA	**CD4510B**	★ **839**
			576-154
		CD4510BE	★ **839**
			576-155
	SGS	HCC4510B	576-163
		HCF4510B	576-165
	Siemens	TCA4510	3168-153
	Signetics	**HEF4510B**	★ **864**
			★ **898**
			576-170
		HEF4510BD	★ **864**
			576-171
	SSS	883/4510B	576-173
		SCL4510B	576-175
	Toshiba	TC4510B	576-180
4511	Fairchild	F4511BC	579-170
			2662-41
		F4511BM	579-171
			2662-42
	National	CD4511BC	580-1
			2662-48
		CD4511BM	580-2
			2662-49
	Panasonic	MN4511B	580-7
	RCA	**CD4511B**	★ **839**
			580-8
	RCA	CD4511B	2662-50
	RCA	**CD4511BE**	★ **839**
			580-9
	RCA	CD4511BE	2662-51
	SGS	HCC4511B	580-14
		HCF4511B	580-15
	Signetics	**HEF4511B**	★ **864**
			★ **898**
			580-18
		HEF4511BD	★ **864**
			580-19
	SSS	883/4511B	580-20
			2662-52
		SCL4511B	580-21
			2662-53
	Solitron	CM4511B	580-22
			2662-54
		CM4511BE	580-23
			2662-55
	Toshiba	TC4511B	580-24
4512	Fairchild	F4512BC	588-184
		F4512BM	588-185
	National	CD4512BC	588-189
		CD4512BM	588-190
	Panasonic	**MN4512B**	★ **828**
			★ **834**
			588-191
	RCA	**CD4512B**	★ **839**
			589-1
		CD4512BE	★ **839**
			589-2
	SGS	HCC4512B	589-3
		HCF4512B	589-4
	Signetics	**HEF4512B**	★ **864**
			★ **898**
			589-5
		HEF4512BD	★ **864**
			589-6
	SSS	883/4512B	589-7
		SCL4512B	589-8
	Toshiba	TC4512B	589-9
4514	Fairchild	F4514BC	579-18
		F4514BM	579-19
	National	CD4514BC	579-30
		CD4514BM	579-31
	RCA	**CD4514B**	★ **837**
			579-36
		CD4514BE	★ **837**
			579-37
	SGS	HCC4514B	579-48
		HCF4514B	579-50
	Signetics	**HEF4514B**	★ **864**
			(Continued)

Base Number	Source	Device	Page-Line
4514	**Signetics**	**HEF4514B**	★ **898**
			579-56
		HEF4514BD	★ **864**
			579-57
	SSS	883/4514B	579-60
		SCL4514B	579-62
	Solitron	CM4514B	579-64
		CM4514BE	579-65
	Toshiba	TC4514B	579-68
4515	Fairchild	F4515BC	579-20
		F4515BM	579-21
	National	CD4515BC	579-32
		CD4515BM	579-33
	RCA	CD4515B	579-38
		CD4515BE	579-39
	SGS	HCC4515B	579-49
		HCF4515B	579-51
	Signetics	**HEF4515B**	★ **864**
			★ **898**
			579-58
		HEF4515BD	★ **864**
			579-59
	SSS	883/4515B	579-61
		SCL4515B	579-63
	Solitron	CM4515B	579-66
		CM4515BE	579-67
	Toshiba	TC4515B	579-69
4516	Fairchild	F4516BC	574-123
		F4516BM	574-124
	Mostek	MK4516-10	3768-63
			¶ 322-14
		MK4516-12	3768-72
			¶ 322-14
		MK4516-15	3768-82
			¶ 322-14
		MKB4516-80	3769-3
		MKB4516-81	3769-16
		MKB4516-82	3769-20
	National	CD4516BC	574-134
		CD4516BM	574-135
	Panasonic	**MN4516B**	★ **828**
			★ **834**
			574-140
	RCA	**CD4516B**	★ **839**
			574-144
		CD4516BE	★ **839**
			574-145
	SGS	HCC4516B	574-156
		HCF4516B	574-157
	Signetics	**HEF4516B**	★ **864**
			★ **898**
			574-164
		HEF4516BD	★ **864**
			574-165
	SSS	883/4516B	574-167
		SCL4516B	574-169
	Toshiba	TC4516B	574-172
4517	**Motorola**	**MCM4517-10**	★ **4046**
			★ **4049**
			3768-64
		MCM4517-12	★ **4046**
			★ **4049**
			3768-73
		MCM4517-15	★ **4046**
			★ **4049**
			3768-83
		MCM4517-20	★ **4046**
			★ **4049**
			3768-100
	RCA	**CD4517B**	★ **838**
			590-83
		CD4517BE	★ **838**
			590-84
	RCA	CD4517BE	3791-52
			3791-55
	Signetics	**HEF4517B**	★ **864**
			★ **898**
			590-85
		HEF4517BD	★ **864**
			590-86
	SSS	883/4517B	590-87
			3791-56
		SCL4517B	590-88
			3791-53
4518	Fairchild	F4518BC	577-19
		F4518BM	577-20
			(Continued)

Arranged alphanumerically from left to right.

Base Number	Source	Device	Page-Line
4518	National	CD4518BC	577-26
		CD4518BM	577-27
	Panasonic	**MN4518B**	★ **828**
			★ **834**
			577-28
	RCA	**CD4518B**	★ **839**
			577-29
			¶ 253-16
		CD4518BE	★ **839**
			577-30
			¶ 253-16
	SGS	HCC4518B	577-35
		HCF4518B	577-36
	Signetics	**HEF4518B**	★ **864**
			★ **898**
			577-39
		HEF4518BD	★ **864**
			577-40
	SSS	883/4518B	577-41
		SCL4518B	577-42
	Solitron	CM4518B	577-43
		CM4518BE	577-44
	Toshiba	TC4518B	577-47
4519	Fairchild	F4519BC	588-153
		F4519BM	588-154
	National	CD4519BC	588-158
		CD4519BM	588-159
	Signetics	**HEF4519B**	★ **864**
			★ **898**
			588-160
		HEF4519BD	★ **864**
			588-161
	Toshiba	TC4519B	588-162
452	**Datel**	**AM-452-2**	★ **2864**
			3201-29
		AM-452-2M	★ **2864**
			3201-30
	Intersil	DG452A	2616-43
		MM452	2622-1
	National	COP452	1338-87
4520	Fairchild	F4520BC	575-1
		F4520BM	575-2
	National	CD4520BC	575-8
		CD4520BM	575-9
	Panasonic	**MN4520B**	★ **828**
			★ **834**
			575-10
	RCA	**CD4520B**	★ **839**
			575-11
			¶ 253-7
		CD4520BE	★ **839**
			575-12
	SGS	HCC4520B	575-13
		HCF4520B	575-14
	Signetics	**HEF4520B**	★ **864**
			★ **898**
			575-17
		HEF4520BD	★ **864**
			575-18
	SSS	883/4520B	575-19
		SCL4520B	575-20
	Solitron	CM4520B	575-21
		CM4520BE	575-22
	Toshiba	TC4520B	575-25
4521	**AMI**	**S4521**	★ **2810**
			2664-15
			2680-50
	Signetics	**HEF4521B**	★ **864**
			★ **898**
			590-43
		HEF4521BD	★ **864**
			590-44
	Toshiba	TC4521B	590-45
4522	Fairchild	F4522BC	576-193
		F4522BM	576-194
	National	CD4522BC	577-1
		CD4522BM	577-2
	Signetics	**HEF4522B**	★ **864**
			★ **898**
			577-3
	SSS	883/4522B	577-4
		SCL4522B	577-5
	Toshiba	TC4522B	577-6
4526	Fairchild	F4526BC	574-179
		F4526BM	574-180
	National	CD4526BC	574-184
			(Continued)

Base Number	Source	Device	Page-Line
4526	National	CD4526BM	574-185
	Signetics	**HEF4526B**	★ **864**
			★ **898**
			574-186
		HEF4526BD	★ **864**
			574-187
	SSS	883/4526B	574-188
		SCL4526B	574-189
	Toshiba	TC4526B	574-190
4527	National	CD4527BC	593-17
		CD4527BM	593-18
	RCA	**CD4527B**	★ **840**
			593-19
			¶ 250-5
		CD4527BE	★ **840**
			593-20
			¶ 250-5
	SGS	HCC4527B	593-21
		HCF4527B	593-22
	Signetics	**HEF4527B**	★ **864**
			★ **898**
			593-23
		HEF4527BD	★ **864**
			593-24
	SSS	883/4527B	593-25
		SCL4527B	593-26
	Toshiba	TC4527B	593-27
4528	Fairchild	F4528BC	589-92
		F4528BM	589-93
	Mostek	MK4528-15	3769-122
			¶ 322-14
		MK4528-20	3769-123
			¶ 322-14
		MK4528-25	3769-125
			¶ 322-14
		MKM4528D-83	
			3769-124
		MKM4528D-84	
			3769-126
	National	CD4528BC	589-99
		CD4528BM	589-100
	Panasonic	**MN4528B**	★ **828**
			589-136
	Signetics	**HEF4528B**	★ **864**
			★ **898**
			589-114
		HEF4528BD	★ **864**
			589-115
	SSS	883/4528B	589-116
		SCL4528B	589-117
			¶ 253-8
	Toshiba	TC4528B	589-118
4529	National	CD4529BC	2622-73
			2623-19
		CD4529BM	2622-74
			2623-20
453	**Datel**	**AM-453-2C**	★ **2864**
			3194-8
		AM-453-2M	★ **2864**
			3194-9
	Intersil	DG453A	2620-31
4530	Toshiba	TC4530B	585-195
4531	Fairchild	F4531BC	595-25
		F4531BM	595-26
	Raytheon	RC4531	3199-17
		RM4531	3196-39
	Signetics	**HEF4531B**	★ **865**
			★ **898**
			595-30
		HEF4531BD	★ **865**
			595-31
	SSS	883/4531B	595-32
		SCL4531B	595-33
	Toshiba	TC4531B	595-34
4532	Fairchild	F4532BC	595-3
		F4532BM	595-4
	RCA	**CD4532B**	★ **837**
			595-8
		CD4532BE	★ **837**
			595-9
	SGS	HCC4532B	595-10
		HCF4532B	595-11
	Signetics	**HEF4532B**	★ **865**
			★ **898**
			595-12
		HEF4532BD	★ **865**
			(Continued)

Base Number	Source	Device	Page-Line
4532	**Signetics**	**HEF4532BD**	**595-13**
	SSS	883/4532B	595-14
		SCL4532B	595-15
	Toshiba	TC4532B	595-16
4534	**AMI**	**S4534**	★ **2811**
			2663-142
			2680-48
	Signetics	**HEF4534B**	★ **865**
			★ **898**
			577-109
4535	**AMI**	**S4535**	★ **2812**
			2664-16
			2680-51
4536	**RCA**	**CD4536B**	★ **839**
			590-7
		CD4536BE	★ **839**
			590-8
4538	National	CD4538BC	589-132
		CD4538BM	589-133
	Panasonic	MN4538B	589-137
	RCA	**CD4538B**	★ **838**
			589-139
		CD4538BE	★ **838**
			589-140
	Signetics	**HEF4538B**	★ **865**
			★ **898**
			589-159
		HEF4538BD	★ **865**
			589-160
	Toshiba	TC4538B	589-165
4539	Fairchild	F4539BC	588-51
		F4539BM	588-52
	Panasonic	**MN4539B**	★ **828**
			★ **834**
			588-58
	Signetics	**HEF4539B**	★ **865**
			★ **898**
			588-61
		HEF4539BD	★ **865**
			588-62
	Toshiba	TC4539B	588-64
454	Intersil	DG454A	2620-82
	NEC	uPC454	3203-44
4541	**RCA**	**CD4541B**	★ **839**
			589-179
		CD4541BE	★ **839**
			590-1
	Signetics	**HEF4541B**	★ **865**
			★ **899**
			590-2
		HEF4541BD	★ **865**
			590-3
4543	National	CD4543BC	579-135
		CD4543BM	579-136
	RCA	**CD4543BD**	★ **839**
			2662-57
		CD4543BE	★ **839**
			2662-58
	Signetics	**HEF4543B**	★ **865**
			★ **899**
			579-143
		HEF4543BD	★ **865**
			579-144
	SSS	883/4543B	579-145
			2662-67
		SCL4543B	579-146
			2662-68
	Toshiba	TC4543B	579-147
455	Intersil	MM455	2621-74
	National	**NS455**	★ **1528**
			1353-4
4550	Signetics	TDA4550	3170-185
4553	Fairchild	F4553BC	577-65
		F4553BM	577-66
4555	Fairchild	F4555BC	578-75
		F4555BM	578-76
	RCA	**CD4555B**	★ **837**
			★ **839**
			578-80
		CD4555BE	★ **837**
			★ **839**
			578-81
	SGS	HCC4555B	578-82
		HCF4555B	578-83
	Signetics	**HEF4555B**	★ **865**
			★ **899**
			(Continued)

Base Number	Source	Device	Page-Line
4555	**Signetics**	**HEF4555B**	**578-84**
		HEF4555BD	★ **865**
			578-85
	SSS	883/4555B	578-86
		SCL4555B	578-87
	Toshiba	TC4555B	578-88
4556	Fairchild	F4556BC	578-89
		F4556BM	578-90
	NEC	uPC4556	3208-30
	Panasonic	MN4556B	578-93
	Raytheon	**RC4556**	★ **3592**
	RCA	**CD4556B**	★ **837**
			★ **839**
			578-94
		CD4556BE	★ **837**
			★ **839**
			578-95
	SGS	HCC4556B	578-97
		HCF4556B	578-98
	Signetics	**HEF4556B**	★ **865**
			★ **899**
			578-99
		HEF4556BD	★ **865**
			578-100
	SSS	883/4556B	578-101
		SCL4556B	578-102
	Toshiba	TC4556B	578-103
4557	Fairchild	F4557BC	592-14
			3791-48
		F4557BM	592-15
			3791-44
	NEC	uPC4557	3208-28
	Signetics	**HEF4557B**	★ **865**
			★ **899**
			592-19
		HEF4557BD	★ **865**
			592-20
4558	Exar	XR4558	3208-56
			¶ 292-5
	Motorola	MC4558	3207-29
		MC4558A	3207-30
		MC4558C	3208-50
		MC4558N	3207-31
		MC4558NC	3208-51
	NEC	uPC4558	3208-57
	Raytheon	**RC4558**	★ **3592**
			3208-58
	Raytheon	RM4558	3207-26
	Signetics	NE4558	3208-53
		SE4558	3207-27
	TI	RC4558	3208-59
	Thomson-CSF		
		TDB4558	3208-52
		TDC4558	3207-28
4559	NEC	uPC4559	3208-29
	Raytheon	**RC4559**	★ **3592**
			3208-54
	Raytheon	RM4559	3207-32
4560	NEC	uPC4560	3208-61
	Raytheon	**RC4560**	★ **3592**
	Signetics	TDA4560	3170-186
	Toshiba	TC4560B	571-4
4561	Toshiba	TC4561B	572-9
4562	**Raytheon**	**RC4562**	★ **3592**
4564	Mostek	MK4564-15	3769-73
			¶ 319-6
			¶ 322-14
			¶ 323-16
		MK4564-20	3769-99
			¶ 319-6
			¶ 322-14
			¶ 323-16
		MK4564-25	3769-113
			¶ 319-6
			¶ 322-14
			¶ 323-16
		MKB4564-82	3769-74
		MKB4564-83	3769-100
		MKB4564-84	3769-114
457	Sanyo	STK457	3165-94
4572	Toshiba	TC4572B	586-8
458	Ferranti	ZN458	3236-85
		ZN458A	3236-86
		ZN458B	3236-87
4581	SSS	883/4581B	571-86
		SCL4581B	571-87

¶ Indicates page number in Application Note Directory.
★ Indicates addition data is provided on the page noted.

Base Number	Source	Device	Page-Line
4582	Fairchild	F4582BC	571-88
		F4582BM	571-89
	SSS	883/4582B	571-100
		SCL4582B	571-101
4583	Fairchild	F4583BC	593-30
		F4583BM	593-31
	Toshiba	TC4583B	593-35
4584	National	CD4584BC	593-131
		CD4584BM	593-132
	SSS	883/4584B	593-153
		SCL4584B	593-154
4585	Panasonic	MN4585B	571-115
	RCA	**CD4585B**	★ **840**
			571-119
		CD4585BE	★ **840**
			571-120
	Signetics	**HEF4585B**	★ **865**
			★ **899**
			571-130
		HEF4585BD	★ **865**
			571-131
	SSS	883/4585B	571-132
		SCL4585B	571-133
	Toshiba	TC4585B	571-137
459	Ferranti	ZN459	3165-111
		ZN459C	3165-112
		ZN459CP	3165-113
	Sanyo	STK459	3165-95
4592	GI	AY3-4592	2667-13
46	Hitachi	HMCS46C	1338-114
			1259-10
	Toshiba	TLCS-46	1339-1
460	Burr-Brown	CS460	1809-12
	Cherry	CS460	3166-44
	Datel	**AM-460-2**	★ **2864**
			3195-46
		AM-460-2M	★ **2864**
			3195-47
	Fairchild	CCD460	3788-39
	Ferranti	ZN460	3165-114
		ZN460C	3165-115
		ZN460CP	3165-116
	TI	TIED460	3233-78
4600	**Harris**	**HA-4600-2**	★ **3426**
			3210-33
		HA-4600-5	★ **3426**
			3210-34
	Siemens	TDA4600-2	3230-93
	Toshiba	TCP4600AC	1265-23
4602	Harris	HA-4602-2	3210-36
	Harris	**HS4602RH**	★ **4721**
			3210-35
4605	Harris	HA-4605-5	3211-4
461	Cherry	CS461	3166-45
	Intersil	DG461A	2618-26
	TI	TIED461	3233-79
4610	Siemens	TDA4610	3171-46
462	Cherry	CS462	3166-46
	Datel	**AM-462-1**	★ **2864**
			3195-52
		AM-462-1M	★ **2864**
			3195-53
		AM-462-2	★ **2864**
			3195-54
		AM-462-2M	★ **2864**
			3195-55
	Intersil	DG462A	2618-79
	TI	TIED462	3233-80
4620	**Harris**	**HA-4620-2**	★ **3428**
			3210-31
		HA-4620-5	★ **3428**
			3210-32
4622	Harris	HA-4622-2	3211-3
4625	Harris	HA-4625-5	3211-8
462532	Hitachi	HN462532	3766-58
462716	Hitachi	HN462716	3765-74
		HN462716-2	3765-62
462732	Hitachi	HN462732	3766-59
463	Cherry	CS463	3166-47
	Intersil	DG463A	2620-109
	Sanyo	STK463	3165-96
	TI	TIED463	3233-81
4632	Plessey	SP4632	3214-83
464	Cherry	CS464	3166-48
	Datel	**AM-464-2**	★ **2864**
			3176-121
			(Continued)

Base Number	Source	Device	Page-Line
464	**Datel**	**AM-464-2**	**3198-24**
		AM-464-2M	★ **2864**
			3176-122
			3198-25
	Fairchild	F464	3788-40
	Intersil	DG464A	2621-5
4642	Plessey	SP4642	3214-80
465	Sanyo	STK465	3165-97
	Telefunken	U465	641-44
4652	Plessey	SP4652	3214-81
4653	Plessey	SP4653	3214-82
46810	Hitachi	HM46810	3771-127
46830	Hitachi	HN46830	3783-69
468A10	Hitachi	HM468A10	3771-121
469	**Siliconix**	**D469**	★ **3080**
			2622-46
47	Hitachi	HMCS47C	1338-115
			1259-11
470	Cherry	CS470	3166-49
	Datel	**AM-470-2C**	★ **2865**
			3196-8
		AM-470-2M	★ **2865**
			3196-9
	Ferranti	ZN470AE	3217-121
	HiLevel	DS470	1813-4
	National	COP470	579-109
			2663-9
			1338-96
4700	Siemens	TDA4700	3230-94
		TDA4700A	3230-95
	Toshiba	TMP4700C	1265-25
4701	Hitachi	H4701B	3791-106
4702	Fairchild	F4702BC	592-43
			2685-33
			1336-29
		F4702BM	592-44
			2685-34
			1336-30
	Harris	**HD4702-2**	★ **1492**
			592-45
	Harris	HD4702-2	2685-35
			1336-31
	Harris	**HD4702-9**	★ **1492**
			592-46
	Harris	HD4702-9	2685-36
			1336-32
	Intersil	IM4702	2685-37
4703	Fairchild	F4703BC	587-125
			1336-25
		F4703BM	587-126
			1336-26
	Intersil	IM4703	2685-38
4704	Fairchild	F4704BC	571-59
			1336-21
		F4704BM	571-60
			1336-22
4705	Fairchild	F4705BC	571-74
			1336-17
		F4705BM	571-75
			1336-18
	SGS	L4705	3221-47
4706	Fairchild	F4706BC	587-127
			1336-27
		F4706BM	587-128
			1336-28
4707	Fairchild	F4707BC	571-57
			1336-19
		F4707BM	571-58
			1336-20
4708	Analogic	MN4708	2623-82
		MN4708D	2624-28
	Fairchild	F4708C	1336-23
		F4708M	1336-24
4710	Fairchild	F4710BC	587-135
			3771-44
			1336-33
		F4710BM	587-136
			3771-45
			1336-34
	SGS	L4710	3223-37
47128	**TI**	**TMS47128-25**	★ **4224**
			3787-10
		TMS47128-35	★ **4224**
			3787-28
		TMS47128-45	★ **4224**
			3787-39

Base Number	Source	Device	Page-Line
4716	Analogic	MN4716	2624-79
	Hitachi	HM4716A-1	3768-75
		HM4716A-2	3768-86
		HM4716A-3	3768-103
		HM4716A-4	3769-6
4718	Siemens	TDA4718	3230-96
		TDA4718A	3230-97
472	Ferranti	ZN472E	3217-122
	National	COP472	1338-88
4720	Fairchild	F4720AC	587-143
			3772-55
		F4720AM	587-144
		F4720C	587-145
			3772-56
			1336-37
		F4720M	587-146
			3772-57
			1336-38
	Signetics	**HEF4720BV**	★ **865**
			★ **899**
			587-155
		HEF4720BVD	★ **865**
			★ **899**
			587-156
4721	Fairchild	F4721BC	588-22
		F4721BM	588-23
472114	Hitachi	HM472114-3	3776-123
		HM472114-4	3777-27
		HM472114A-1	3776-31
		HM472114A-2	3776-58
4723	Fairchild	F4723BC	586-21
		F4723BM	586-22
	National	CD4723BC	586-23
		CD4723BM	586-24
4724	Fairchild	F4724BC	587-46
		F4724BM	587-47
	National	CD4724BC	587-55
		CD4724BM	587-56
	RCA	**CD4724B**	★ **838**
			587-63
		CD4724BE	★ **838**
			587-64
	Signetics	**HEF4724B**	★ **865**
			★ **899**
			587-73
		HEF4724BD	★ **865**
			587-74
4725	Fairchild	F4725BC	587-129
			1336-35
		F4725BM	587-130
			1336-36
47256	**TI**	**TMS47256-25**	★ **4223**
			3787-72
		TMS47256-35	★ **4223**
			3787-86
		TMS47256-45	★ **4223**
			3787-98
4726	Fairchild	F4726BC	1336-39
		F4726BM	1336-40
472632	Hitachi	HN472632A-30	
			3766-47
473	Ferranti	ZN473E	3218-119
4731	Fairchild	F4731BC	590-91
			3791-59
		F4731BM	590-92
			3791-60
	Signetics	**HEF4731BV**	★ **865**
			★ **899**
			590-93
		HEF4731BVD	★ **865**
			★ **899**
			590-94
	TeledyneP	4731	3239-32
		4731-83	3239-33
4732	SMC	ROM4732	3785-21
			¶ 260-4
	TeledyneP	4732	3239-34
		4732-83	3239-35
	TI	**TMS4732**	★ **4226**
			3785-29
			¶ 324-1
		TMS4732-30	★ **4226**
			3784-97
			¶ 324-1
		TMS4732-35	★ **4226**
			3784-123
			(Continued)

Base Number	Source	Device	Page-Line
4732	**TI**	**TMS4732-35**	¶ 324-1
		TMS4732-45	★ **4226**
			3785-30
			¶ 324-1
4733	TeledyneP	4733	3239-36
		4733-83	3239-37
4734	Fairchild	F4734BC	579-172
			2662-75
		F4734BM	579-173
			2662-76
	TeledyneP	4734	3239-38
		4734-83	3239-39
4735	Fairchild	F4735BC	1336-41
		F4735BM	1336-42
	TeledyneP	4735	3239-40
		4735-83	3239-41
4736	Fairchild	F4736BC	588-4
		F4736BM	588-5
	TeledyneP	4736	3234-12
		4736-83	3239-42
4737	**Signetics**	**HEF4737**	★ **865**
			★ **899**
			577-99
4738	**Signetics**	**HEF4738**	★ **865**
			★ **899**
			1343-19
			1355-20
4739	**Exar**	**XR4739**	★ **3378**
			3165-151
			3208-60
		XR4739M	★ **3378**
			3165-152
	Raytheon	**RC4739**	★ **3592**
			3208-55
	TeledyneP	4739	3239-43
		4739-80	3239-44
474	Ferranti	ZN474E	3216-149
4741	**Exar**	**XR4741C**	★ **3378**
			3211-44
		XR4741M	★ **3378**
			3210-56
	Harris	**HA-4741-2**	★ **3430**
			3210-57
		HA-4741-5	★ **3430**
			3211-45
	Motorola	MC4741	3211-58
		MC4741C	3212-46
	NEC	uPC4741	3211-43
	Raytheon	HA4741-2	3210-58
		HA4741-5	3211-46
		HA4741-8	3210-11
4742	Plessey	SP4742	3214-78
4743	TeledyneP	4743	3239-45
		4743-80	3239-46
475	Ferranti	ZN475E	3217-123
4750	**Signetics**	**HEF4750**	★ **865**
			★ **899**
			3214-130
4751	**Signetics**	**HEF4751**	★ **865**
			★ **899**
			641-110
4752	**Signetics**	**HEF4752V**	★ **865**
			★ **899**
			3234-136
4754	**Signetics**	**HEF4754**	★ **865**
			★ **899**
476	Ferranti	ZN476E	3217-124
4761	Siemens	TAA4761	3176-27
4764	**TI**	**TMS4764**	★ **4225**
			3786-84
		TMS4764-30	★ **4225**
			3786-18
		TMS4764-35	★ **4225**
			3786-49
		TMS4764-45	★ **4225**
			3786-85
4765	Siemens	TAA4765	3176-28
477	Ferranti	ZN477E	3217-125
4780	Plessey	SP4780	3214-79
	TeledyneP	4780	3233-135
4781	TeledyneP	4781	3233-136
4782	TeledyneP	4782	3233-137
4785	SGS	L4785	3223-17
48	Intersil	Concept-48	1961-25
	Sunrise	**ZAP48**	★ **4403**
	TeledyneC	CAG48A	2616-74

Arranged alphanumerically from left to right.

© IC MASTER 1984

Base Number	Source	Device	Page-Line
480	Cherry	CS480	3166-50
	Cybernetic	CY480	2680-129
			1354-28
	Sprague	UHP-480	2663-31
4801	Mostek	MK4801A-55	3777-56
		MK4801A-70	3777-57
		MK4801A-90	3777-59
		MKB4801A-81	3777-72
		MKB4801A-870	3777-58
		MKB4801A-890	3777-60
	Sprague	UCN-4801A	2683-123
		UCS-4801H	2679-9
			¶ 288-11
48016	Hitachi	HN48016	3758-78
4802	Mostek	MKB4802-81	3778-44
4805	**Raytheon**	**RC4805**	★ **3805**
			3159-6
			¶ 300-9
		RC4805A	★ **3805**
			3159-1
			¶ 300-9
		RM4805	★ **3582**
			3159-7
		RM4805A	★ **3582**
			3159-2
	SGS	L4805	3221-36
	Sprague	UCN-4805A	2661-79
4806	Sprague	UCN-4806A	2661-80
4807	Sprague	UCN-4807A	2680-45
4808	Sprague	UCN-4808A	2680-46
481	Cherry	CS481	3166-51
	Sprague	UHP-481	2663-74
4810	SGS	L4810	3223-34
	Sprague	UCN-4810A	2663-143
		UCS-4810H	2679-10
			2680-49
			¶ 288-11
	TI	UCN4810A	2663-144
			¶ 287-15
4815	Sprague	UCN-4815A	2663-84
		UCS-4815H	2663-85
			¶ 288-11
4816	Hitachi	HM4816A-7	3768-80
482	Cherry	CS482	3166-52
	Sprague	UHP-482	2662-142
4821	Sprague	UCN-4821A	2683-132
		UCS-4821H	2683-135
4822	Sprague	UCN-4822A	2683-133
		UCS-4822H	2683-136
4823	Sprague	UCN-4823A	2683-134
		UCS-4823H	2683-137
4827128			
	Hitachi	**HM4827128-25**	★ **3975**
			3766-127
			3767-4
		HM4827128-30	★ **3975**
			3767-8
			3767-13
		HM4827128-45	★ **3975**
			3767-18
			3767-24
482732	Hitachi	HN482732A-20	3766-32
		HN482732A-25	3766-39
		HN482732A-30	3766-48
482764	Hitachi	HN482764-3	3766-89
		HN482764-4	3766-110
483	Cherry	CS483	3166-53
484	Cherry	CS484	3166-54
4847	Hitachi	HM4847	3779-115
		HM4847-2	3779-71
		HM4847-3	3779-85
485	Cherry	CS485	3166-55
4856	TeledyneP	4856	3238-72
4857	TeledyneP	4857	3238-73
486	Cherry	CS486	3166-56
4860	**Datel**	**SHM-4860**	★ **2861**
			★ **2864**
	TeledyneP	4860	3238-74
		4860-83	3238-75
4864	Hitachi	HM4864-1	3769-46
		HM4864-2	3769-66
			(Continued)

Base Number	Source	Device	Page-Line
4864	Hitachi	HM4864-3	3769-92
		HM4864A-12	3769-47
		HM4864A-15	3769-67
		HM4864A-20	3769-93
	National	NMC4864	3781-118
4865	Hitachi	HM4865A-12	3769-48
		HM4865A-15	3769-68
		HM4865A-20	3769-94
487	Cherry	CS487	3166-57
	SGS	L487	3221-48
488	Cherry	CS488	3166-58
4885	SGS	L4885	3223-15
489	Cherry	CS489	3166-59
49	TeledyneC	CAG49	2617-84
			2617-86
490	**Datel**	**AM-490**	★ **2865**
			3182-61
		AM-490-2A	★ **2865**
			3181-18
		AM-490-2B	★ **2865**
			3181-16
		AM-490-2C	★ **2865**
			3181-15
		AM-490-2M	★ **2865**
			3181-17
	Plessey	SL490	3169-46
	Sprague	UHD-490	2663-25
		UHP-490	2663-26
4900	**Harris**	**HA-4900-2**	★ **3457**
			3162-49
4902	Harris	HA-4902-2	3163-1
	TeledyneP	4902	3233-62
		4902-83	3233-63
4905	Harris	HA-4905-5	3163-37
491	Sprague	UHD-491	2663-43
		UHP-491	2663-44
4910	TI	TCM4910	3216-124
4913	TI	TCM4913	3216-80
4914	TI	TCM4914	3216-81
4916	TI	TCM4916	3216-82
			3216-96
4917	TI	TCM4917	3216-64
			3216-83
493	TI	TL493C	3231-5
	Unitrode	**UC493A**	★ **3709**
			3231-71
		UC493AC	★ **3709**
			3231-72
494	**Exar**	**XR494**	★ **3380**
			3230-36
	Fairchild	uA494	3230-39
		uA494M	3230-40
	Motorola	**TL494C**	★ **3533**
			3230-74
		TL494M	★ **3533**
			3230-75
	National	**COP494**	★ **4067**
			3758-1
	National	COP494	1338-104
	TI	TL494C	3231-6
		TL494M	3231-7
	Unitrode	**UC494A**	★ **3709**
			3231-73
		UC494AC	★ **3709**
			3231-74
4944	National	NSL4944	3234-109
495	**Exar**	**XR495**	★ **3380**
			3230-37
	Motorola	**TL495C**	★ **3533**
			3230-76
		TL495M	★ **3533**
			3230-77
	National	**COP495**	★ **4068**
			3758-22
	Sprague	UHP-495	2663-45
	TI	TL495C	3231-8
	Unitrode	**UC495**	★ **3709**
			3231-75
		UC495A	★ **3709**
			3231-76
		UC495AC	★ **3709**
			3231-77
		UC495B	★ **3709**
			3231-78
		UC495BC	★ **3709**
			3231-79

Base Number	Source	Device	Page-Line
496	Telefunken	U496BS	641-48
	TI	TL496C	3235-160
497	TI	TL497AC	3231-9
		TL497AM	3231-10
498	National	COP498	587-167
			1338-94
499	National	COP499	1338-98
4R101	TeledyneC	CS4R101A	2620-59
5	**AMI**	**UA-5**	★ **4619**
			4468-9
	Ferranti	ULA5C	4469-17
			4469-32
		ULA5L	4474-6
		ULA5N	4470-35
			4471-7
		ULA5RA	4464-35
			4465-16
		ULA5RB	4468-28
			4468-53
		ULA5RC	4470-15
			4470-41
		ULA5RD	4471-31
			4471-49
	Interdesign	ULA5C	4469-18
			4469-33
			4469-33
		ULA5N	4470-36
			4471-8
		ULA5RA	4464-36
			4465-17
		ULA5RB	4468-29
			4468-54
		ULA5RC	4470-16
			4470-42
		ULA5RD	4471-32
			4471-50
	LSIComp	**RED5/6**	★ **803**
			589-168
			640-89
	National	MF5	3232-26
	Sharp	SM-5	1338-130
	Siliconix	ISO-5	
		Library	4478-23
	Supertex	ED5	592-123
50	**Burr-Brown**	**PCM50**	★ **2849**
			¶ 281-13
	IntMicCir	Interchip 50	4463-30
	LSIComp	**RED50/60**	★ **803**
			589-170
			641-10
	MicroTech	SGA50	4462-13
	TeledyneC	CAG50	2617-85
	TI	**SDS50**	★ **1719**
	Wintek	**CAF50**	★ **2062**
500	**AMI**	**GA500**	★ **4619**
			4463-16
	AnalogSys	MA500	3156-20
	Cybernetic	CY500	2680-121
			1354-2
	Datel	**AM-500**	★ **2861**
			★ **2865**
			3176-10
		AM-500GC	★ **2861**
			★ **2865**
			3176-62
			3180-138
			3192-56
		AM-500MC	★ **2861**
			★ **2865**
			3176-63
			3180-139
			3192-57
		AM-500MM	★ **2861**
			★ **2865**
			3192-59
		AM-500MR	★ **2861**
			★ **2865**
			3192-58
	Dionics	DI500	2662-129
	Exar	**XR500**	★ **3386**
			4471-30
	Fujitsu	**B500**	★ **4637**
			4461-23
	Motorola	**MCA500AL3**	★ **4797**
			4462-15
	Quay	500T	1815-12
			(Continued)

Base Number	Source	Device	Page-Line
500	Sprague	UHC/D-500	613-155
			2683-44
		UHP-500	613-159
			2683-48
5000	**AMI**	**GA5000D**	★ **4619**
			4462-5
	Curtis	PD5000E	4351-5
	Signetics	SAA5000	3169-55
	Signetics	**SCC5000SH**	★ **4870**
	Siliconix	**SD5000**	★ **3080**
			2617-80
	Toshiba	TC5000	590-79
50000	ZyMOS	Zy50000	4479-2
5001	Intersil	IH5001	2615-15
			¶ 292-2
	Siliconix	**SD5001**	★ **3080**
			2617-78
	Telmos	TM5001	4467-30
	Toshiba	TC5001	577-100
5002	Intersil	IH5002	2615-18
	Mostek	MK5002	640-29
	Siliconix	**SD5002**	★ **3080**
			2617-79
	Telmos	TMG5002	4465-38
	Toshiba	TC5002B	578-74
5003	Intersil	IH5003	2615-119
	MicroPwr	MPS5003	3164-8
	Toshiba	TC5003	3172-181
5004	Intersil	IH5004	2616-12
	MicroPwr	MPS5004	3164-9
	Toshiba	TC5004	590-90
5005	Intersil	IH5005	2615-91
	Mostek	MK5005	640-30
5006	Intersil	IH5006	2615-120
	OEI	5006	3235-122
5007	Intersil	IH5007	2616-29
	Mostek	MK5007	640-31
5009	Intersil	IH5009C	2621-84
			¶ 281-8
			¶ 281-8
			¶ 292-2
		IH5009M	2621-85
			¶ 281-8
			¶ 281-8
			¶ 292-2
	Mostek	MK5009	640-43
			¶ 254-10
	National	AH5009C	2621-86
501	**Burr-Brown**	**OPA501**	★ **2850**
			3175-52
		OPA501A	★ **2850**
			3175-53
			3201-12
		OPA501B	★ **2850**
			3195-42
		OPA501R	★ **2850**
			3201-11
		OPA501S	★ **2850**
			3175-51
			3195-43
	Burr-Brown	PCM501	3164-36
	Fujitsu	MB501	2685-92
	RCA	GP501AD	1337-83
	SiliconSys	**SSI501**	★ **4208**
	Siliconix	**DG501A**	★ **3082**
			2623-98
			2623-104
		DG501B	★ **3082**
			2623-99
			2623-105
		DG501C	★ **3082**
			2623-100
			2623-106
5010	**AD**	**AD5010K**	★ **2839**
			2625-9
	Intersil	IH5010C	2621-91
		IH5010M	2621-92
	MicroPwr	**MP5010**	★ **3529**
			3236-48
		MP5010A	★ **3529**
			3236-49
	National	AH5010C	2621-93
	Panasonic	AN5010	3170-97
	Siemens	SDA5010	2625-11
	Toshiba	TC5010	577-98

¶ Indicates page number in Application Note Directory.
★ Indicates addition data is provided on the page noted.

Base Number	Source	Device	Page-Line
5011	Intersil	IH5011C	2621-110
		IH5011M	2621-111
	National	AH5011C	2621-112
	Panasonic	AN5011	3170-98
5012	Intersil	IH5012C	2621-117
		IH5012M	2621-118
	National	AH5012C	2621-119
	Signetics	SAA5012	3169-56
	Toshiba	TC5012B	573-82
5013	Intersil	IH5013C	2621-60
		IH5013M	2621-61
5014	Intersil	IH5014C	2621-64
		IH5014M	2621-65
5015	Intersil	IH5015C	2621-68
		IH5015M	2621-69
	SMC	SR5015	3788-41
		SR5015-133	3791-92
		SR5015-80	3791-62
		SR5015-81	3791-76
5016	Intersil	IH5016C	2621-72
		IH5016M	2621-73
	SMC	COM5016	640-3
			2685-60
		COM5016T	640-4
			2685-61
5017	Intersil	IH5017C	2621-52
		IH5017M	2621-53
	SMC	SR5017	3757-72
			3791-93
5018	Intersil	IH5018C	2621-48
		IH5018M	2621-49
	Signetics	NE5018	2641-45
			1354-106
	Signetics	**SE5018**	★ **526**
			2641-46
	SMC	SR5018	3757-70
			3791-77
	Toshiba	TC5018	574-38
		TC5018B	594-183
5019	Intersil	IH5019C	2621-44
		IH5019M	2621-45
	Signetics	**NE5019**	★ **3607**
			2639-50
		SE5019	★ **3607**
			2639-51
502	AD	AD502J	3198-19
		AD502K	3195-26
		AD502L	3195-25
		AD502S	3195-30
	Dionics	DI502	2662-130
	Fujitsu	MB502	1354-12
	RCA	GP502AD	1350-42
	Sprague	UHC/D-502	614-31
			2683-75
		UHP-502	614-35
			2683-79
5020	Intersil	IH5020C	2621-56
		IH5020M	2621-57
	Signetics	**NE5020**	★ **3608**
			2644-49
	Signetics	SAA5020	3218-106
	Toshiba	TC5020B	592-35
5021	Intersil	IH5021C	2621-31
		IH5021M	2621-32
	OEI	5021	3238-53
5022	Intersil	IH5022C	2621-38
		IH5022M	2621-39
	Toshiba	TC5022B	580-25
5023	Intersil	IH5023C	2621-33
		IH5023M	2621-34
	Toshiba	TC5023	2624-42
5024	Intersil	IH5024C	2621-40
		IH5024M	2621-41
	Toshiba	TC5024	572-47
50240	AMI	S50240	3167-90
			¶ 302-11
	Mostek	MK50240	3167-93
50241	AMI	S50241	3167-91
	Mostek	MK50241	3167-94
50242	AMI	S50242	3167-92
	Mostek	MK50242	3167-95
5025	Intersil	IH5025C	2621-82
			¶ 281-8
			¶ 292-2
		IH5025M	2621-83
			¶ 281-8
			(Continued)

Base Number	Source	Device	Page-Line
5025	Intersil	IH5025M	¶ 292-2
	OEI	5025	3238-54
	Signetics	SAA5025B	3218-103
		SAA5025C	3218-104
		SAA5025D	3218-105
	SMC	COM5025	2686-91
	Toshiba	TC5025	572-48
50256	**Hitachi**	**HM50256-12**	★ **3970**
			3770-3
		HM50256-15	★ **3970**
			3770-11
		HM50256-20	★ **3970**
			3770-16
50257	**Hitachi**	**HM50257-12**	★ **3971**
			3770-4
		HM50257-15	★ **3971**
			3770-12
		HM50257-20	★ **3971**
			3770-17
5026	Intersil	IH5026C	2621-89
		IH5026M	2621-90
	SMC	COM5026	640-14
			2685-29
		COM5026T	640-15
			2685-30
	Toshiba	TC5026B	578-15
5027	Intersil	IH5027C	2621-108
		IH5027M	2621-109
	SSS	SND5027	1353-32
			¶ 255-1
			¶ 255-6
			¶ 264-6
			¶ 288-6
			¶ 305-7
			¶ 306-9
	SMC	CRT5027	1353-34
			¶ 261-18
			¶ 263-5
			¶ 263-11
	Toshiba	TC5027B	574-41
5028	Intersil	IH5028C	2621-115
		IH5028M	2621-116
5029	Intersil	IH5029C	2621-58
		IH5029M	2621-59
	Toshiba	TC5029B	583-66
503	**AD**	**AD503J**	★ **3351**
			3203-13
		AD503K	★ **3351**
			3202-56
		AD503S	★ **3351**
			3202-57
	Dionics	DI503	2662-150
	RCA	GP503AD	1337-93
	Siliconix	**DG503A**	★ **3082**
			2623-102
		DG503B	★ **3082**
			2623-103
	Sprague	UHC/D-503	614-32
			2683-76
		UHP-503	614-36
			2683-80
5030	Intersil	IH5030C	2621-62
		IH5030M	2621-63
	OEI	5030A	3235-123
	Signetics	SAA5030	3218-107
5031	Intersil	IH5031C	2621-66
		IH5031M	2621-67
5032	Intersil	IH5032C	2621-70
		IH5032M	2621-71
	OEI	5032A	3235-124
	Toshiba	TC5032	577-110
5033	**Harris**	**HA-5033**	★ **3462**
			3155-14
		HA-5033-2	★ **3462**
			3156-75
			3174-41
		HA-5033-5	★ **3462**
			3156-76
			3174-42
	Intersil	IH5033C	2621-50
		IH5033M	2621-51
5034	Intersil	IH5034C	2621-46
		IH5034M	2621-47
	Signetics	**NE5034**	★ **3609**
			2627-1

Base Number	Source	Device	Page-Line
5035	Intersil	IH5035C	2621-42
		IH5035M	2621-43
5036	Intersil	IH5036C	2621-54
		IH5036M	2621-55
	Signetics	NE5036	2625-18
	SMC	COM5036	640-5
			2685-62
		COM5036T	640-6
			2685-63
	Toshiba	TC5036	575-122
5037	Intersil	IH5037C	2621-29
		IH5037M	2621-30
	Signetics	**NE5037**	★ **3610**
			2625-19
	SSS	SND5037	1353-33
			¶ 264-6
			¶ 265-7
			¶ 288-6
			¶ 305-7
	SMC	CRT5037	1353-37
			¶ 260-4
			¶ 262-17
			¶ 263-5
			¶ 268-5
	Toshiba	TC5037	577-101
5038	Intersil	IH5038C	2621-36
		IH5038M	2621-37
50395	Mostek	MK50395	640-33
			¶ 254-1
50396	Mostek	MK50396	640-34
			¶ 254-1
50397	Mostek	MK50397	640-35
			¶ 254-1
50398	Mostek	MK50398	640-36
50399	Mostek	MK50399	640-37
504	**AD**	**AD504B**	★ **3351**
			2633-6
		AD504J	★ **3351**
			3192-3
		AD504K	★ **3351**
			3189-8
		AD504L	★ **3351**
			3187-13
		AD504M	★ **3351**
			3187-12
		AD504S	★ **3351**
			3187-14
	Dionics	DI504	2662-151
	RCA	GP504AD	1337-81
	RTC	MS504	2623-23
5040	**Harris**	**HI5040-2**	★ **2882**
			2615-5
		HI5040-5	★ **2882**
			2615-6
	Intersil	**IH5040C**	★ **3021**
			2615-8
			¶ 281-8
			¶ 292-2
		IH5040M	★ **3021**
			2615-7
			¶ 281-8
			¶ 292-2
	Signetics	SAA5040B	3218-100
	Siliconix	**DG5040A**	★ **3077**
			2615-2
		DG5040C	★ **3077**
			2615-3
5041	**Harris**	**HI5041-2**	★ **2882**
			2615-67
		HI5041-5	★ **2882**
			2615-68
	Intersil	**IH5041C**	★ **3021**
			2615-70
		IH5041M	★ **3021**
			2615-66
	Siliconix	**DG5041A**	★ **3077**
			2615-53
		DG5041C	★ **3077**
			2615-54
5042	**Harris**	**HI5042-2**	★ **2882**
			2618-2
		HI5042-5	★ **2882**
			2618-3
	Intersil	**IH5042C**	★ **3021**
			2618-4
		IH5042M	★ **3021**
			(Continued)

Base Number	Source	Device	Page-Line
5042	**Intersil**	**IH5042M**	**2618-1**
	Siliconix	**DG5042A**	★ **3078**
			2617-125
		DG5042C	★ **3078**
			2617-126
5043	**Harris**	**HI5043-2**	★ **2882**
			2618-121
		HI5043-5	★ **2882**
			2618-122
	Intersil	**IH5043C**	★ **3021**
			2619-1
		IH5043M	★ **3021**
			2618-120
	Siliconix	**DG5043A**	★ **3078**
			2618-117
		DG5043C	★ **3078**
			2618-118
5044	**Harris**	**HI5044-2**	★ **2882**
			2619-101
		HI5044-5	★ **2882**
			2619-102
	Intersil	**IH5044C**	★ **3021**
			2619-103
		IH5044M	★ **3021**
			2619-96
			2619-104
	Signetics	**NE5044**	★ **3626**
			3218-46
	Siliconix	**DG5044A**	★ **3079**
			2619-99
		DG5044C	★ **3079**
			2619-100
5045	**Harris**	**HI5045-2**	★ **2882**
			2620-9
		HI5045-5	★ **2882**
			2620-10
	Intersil	**IH5045C**	★ **3021**
			2620-11
		IH5045M	★ **3021**
			2620-8
	Signetics	**NE5045**	★ **3629**
			3218-47
	Signetics	SAA5045	3218-108
	Siliconix	**DG5045A**	★ **3079**
			2620-5
		DG5045C	★ **3079**
			2620-6
5046	**Harris**	**HI5046-2**	★ **2882**
			2620-95
		HI5046-5	★ **2882**
			2620-96
		HI5046A-2	★ **2882**
			2620-92
		HI5046A-5	★ **2882**
			2620-93
	Intersil	**IH5046C**	★ **3021**
			2620-97
		IH5046M	★ **3021**
			2620-94
	SMC	COM5046	640-16
			2685-31
		COM5046T	640-17
			2685-32
5047	**Harris**	**HI5047-2**	★ **2882**
			2621-24
		HI5047-5	★ **2882**
			2621-25
		HI5047A-2	★ **2882**
			2621-21
		HI5047A-5	★ **2882**
			2621-22
	Intersil	**IH5047C**	★ **3021**
			2621-26
		IH5047M	★ **3021**
			2621-23
	SMC	CRT5047	1353-36
	Toshiba	TC5047A-1	3777-48
		TC5047A-2	3777-51
5048	**Harris**	**HI5048-2**	★ **2882**
			2615-51
		HI5048-5	★ **2882**
			2615-52
	Intersil	**IH5048C**	★ **3021**
			2615-26
		IH5048M	★ **3021**
			(Continued)

Arranged alphanumerically from left to right.

© IC MASTER 1984

Base Number	Source	Device	Page-Line
5048	**Intersil**	**IH5048M**	**2615-25**
	Toshiba	TC5048	575-47
5049	**Harris**	**HI5049-2**	**★2882**
			2620-3
		HI5049-5	**★2882**
			2620-4
	Intersil	**IH5049C**	**★3021**
			2619-110
		IH5049M	**★3021**
			2619-109
505	**Barvee**	**BC505**	**★4626**
			4466-51
			4467-9
	Dionics	DI505	2663-35
	RCA	GP505AD	1337-89
	TI	TL505C	2637-25
5050	**Harris**	**HI5050-2**	**★2882**
			2617-123
		HI5050-5	**★2882**
			2617-124
	Intersil	**IH5050C**	**★3021**
			2617-109
		IH5050M	**★3021**
			2617-108
	Mitel	MA5050	4465-34
	Toshiba	TC5050	590-89
50500	GTEMicro	50500A	4466-31
		50500B	4462-30
5051	**Harris**	**HI5051-2**	**★2882**
			2618-113
		HI5051-5	**★2882**
			2618-114
	Intersil	**IH5051C**	**★3021**
			2618-99
		IH5051M	**★3021**
			2618-98
	Toshiba	TC5051	577-102
5052	Intersil	IH5052C	2616-97
		IH5052M	2616-91
	Toshiba	TC5052	577-103
5053	Intersil	IH5053C	2616-98
		IH5053M	2616-92
	MicroPwr	MPS5053	3164-10
	Toshiba	TC5053	577-104
5054	Siemens	5054	3167-101
	Toshiba	TC5054	577-105
5055	AMD	AM5055	3791-91
	MMI	5055	3755-8
	Signetics	SAA5055	3218-102
5056	AMD	AM5056	3791-98
5057	AMD	AM5057	3791-101
	SMC	CRT5057	1353-35
			¶ 263-5
506	**AD**	**AD506J**	**★3351**
			3193-31
		AD506K	**★3351**
			3189-3
		AD506L	**★3351**
			3187-39
		AD506S	**★3351**
			3189-4
	Harris	**HI506-2**	**★2885**
			2624-60
		HI506-5	**★2885**
			2624-61
		HI506A-2	**★2885**
			2624-77
		HI506A-5	**★2885**
			2624-80
		HI506L-2	**★2885**
			2624-78
		HI506L-5	**★2885**
			2624-81
	RCA	GP506AD	1337-82
	Siliconix	**DG506A**	**★3082**
			2624-62
			¶ 291-11
		DG506AA	**★3082**
			2622-111
			¶ 291-11
		DG506AB	**★3082**
			2622-113
			¶ 291-11
		DG506AC	**★3082**
			2622-114
			¶ 291-11
			(Continued)

Base Number	Source	Device	Page-Line
506	**Siliconix**	**DG506B**	**★3082**
			2624-66
			¶ 291-11
		DG506C	**★3082**
			2624-67
			¶ 291-11
	Sprague	UHC/D-506	613-156
			2683-45
		UHP-506	613-160
			2683-49
	TI	TL506C	3161-53
		TL506M	3161-1
5062	**Harris**	**HA-5062-2**	**★3432**
			3198-6
		HA-5062-5	**★3432**
			3202-30
		HA-5062A-5	**★3432**
			3198-7
		HA-5062B-5	**★3432**
			3192-47
5064	**Harris**	**HA-5064-2**	**★3434**
			3212-5
		HA-5064-5	**★3434**
			3213-41
		HA-5064A-5	**★3434**
			3212-6
		HA-5064B-5	**★3434**
			3210-46
	Toshiba	TC5064B	572-57
5065	**MicroNet**	**MN5065**	**★3043**
			2627-23
		MN5065H	**★3043**
			2627-24
	Toshiba	TC5065B	572-58
5066	**MicroNet**	**MN5066**	**★3043**
			2627-25
		MN5066H	**★3043**
			2627-26
	Toshiba	TC5066B	573-142
5067	Toshiba	TC5067B	573-143
5068	Toshiba	TC5068B	580-26
5069	Toshiba	TC5069B	580-27
507	**AD**	**AD507J**	**★3353**
			3198-21
		AD507K	**★3353**
			3193-11
		AD507S	**★3353**
			3193-38
	Dionics	DI507	2663-36
	Harris	**HI507-2**	**★2885**
			2624-9
		HI507-5	**★2885**
			2624-10
		HI507A-2	**★2885**
			2624-27
		HI507A-5	**★2885**
			2624-29
		HI507L-2	**★2885**
			2624-34
		HI507L-5	**★2885**
			2624-35
	RCA	GP507AD	1337-85
	Sanyo	STK507	3225-67
	Siliconix	**DG507AA**	**★3082**
			2624-11
		DG507AB	**★3082**
			2624-16
		DG507AC	**★3082**
			2624-17
	Sprague	UHC/D-507	614-10
			2683-55
		UHP-507	614-14
			2683-59
	TI	TL507C	2625-21
5070	Signetics	SAA5070	3219-47
5071	MicroPwr	MP5071	3168-120
508	Dionics	DI508	2663-59
	Harris	**HI508-2**	**★2893**
			2623-62
		HI508-5	**★2893**
			2623-63
		HI508A-2	**★2893**
			2623-85
		HI508A-5	**★2893**
			2623-87
		HI508L-2	**★2893**
			(Continued)

Base Number	Source	Device	Page-Line
508	**Harris**	**HI508L-2**	**2624-36**
		HI508L-5	**★2893**
			2624-37
		HS508ARH	**★4729**
			2623-86
	RCA	GP508AD	1337-84
	Siliconix	**DG508AA**	**★3082**
			2623-72
		DG508AB	**★3082**
			2623-75
		DG508AC	**★3082**
			2623-76
	Sprague	UHC/D-508	614-11
			2683-56
		UHP-508	614-15
			2683-60
5080	**LSILogic**	**LL5080**	**★4762**
			4465-46
50808	Mostek	MK50808	2627-35
50816	Mostek	MK50816	2627-36
5082	**Harris**	**HA-5082-2**	**★3436**
			3198-11
		HA-5082-5	**★3436**
			3202-33
		HA-5082A-5	**★3436**
			3198-12
		HA-5082B-5	**★3436**
			3192-50
	Toshiba	TC5082	590-11
		TC5082L	590-10
5084	**Harris**	**HA-5084-2**	**★3438**
			3211-22
		HA-5084-5	**★3438**
			3213-31
		HA-5084A-5	**★3438**
			3211-23
		HA-5084B-5	**★3438**
			3210-22
5086	**MMI**	**5086**	**★ 819**
			627-99
	MMI	5086	3756-3
5087	**MMI**	**5087**	**★ 819**
			627-100
	MMI	5087	3756-4
	Mostek	MK5087	3219-72
	TI	TCM5087	3219-92
5089	ITT	SBA5089	3219-69
	Mitel	MT5089	3219-71
	Mostek	MK5089	3219-73
	TI	TCM5089	3219-93
509	**AD**	**AD509J**	**★3353**
			3176-97
			3201-17
		AD509K	**★3353**
			3176-91
			3200-12
		AD509S	**★3353**
			3176-92
			3200-13
	Dionics	DI509	2663-60
	Harris	**HI509-2**	**★2893**
			2622-101
		HI509-5	**★2893**
			2622-102
		HI509A-2	**★2893**
			2623-4
		HI509A-5	**★2893**
			2623-5
		HI509L-2	**★2893**
			2623-12
		HI509L-5	**★2893**
			2623-13
	RCA	GP509AD	1337-87
	Siliconix	**DG509AA**	**★3082**
			2622-112
		DG509AB	**★3082**
			2622-115
		DG509AC	**★3082**
			2622-116
5090	OEI	5090A	3232-109
	Signetics	**NE5090**	**★3624**
			2680-13
	Signetics	SE5090	2680-14
	Toshiba	TC5090	2628-31
5091	ITT	SBA5091	3219-70
	Mostek	MK5091	3219-74
			(Continued)

Base Number	Source	Device	Page-Line
5091	TI	TCM5091	3219-94
	Toshiba	TC5091	2628-30
5092	Mostek	MK5092	3219-75
	TI	TCM5092	3219-95
5094	Mostek	MK5094	3219-76
50981	Mostek	MK50981	3217-44
			¶ 299-15
50982	Mostek	MK50982	3217-45
			¶ 299-15
50991	Mostek	MK50991	3217-46
50992	Mostek	MK50992	3217-47
			¶ 298-12
			¶ 299-15
50H000	Toshiba	TC50H000	572-116
50H001	Toshiba	TC50H001	572-161
50X50	Reticon	RA-50X50A	3234-64
51	NEC	UPC51A	3197-33
510	**AD**	**AD510J**	**★3351**
			3183-8
		AD510K	**★3351**
			3182-10
		AD510L	**★3351**
			3181-33
		AD510S	**★3351**
			3182-11
	Barvee	**BC510**	**★4626**
			4466-53
	Dionics	DI510	2663-88
	National	TBA510	3170-124
	RCA	GP510AD	1337-92
5100	**Harris**	**HA-5100-2**	**★3440**
			3186-3
		HA-5100-5	**★3440**
			3186-4
	MicroNet	**MN5100**	**★3043**
			2626-8
		MN5100H	**★3043**
			2626-9
	Mitel	MA5100	4465-35
	Plessey	**CLA5100**	**★4817**
	TI	TMS5100	3169-96
51000	GTEMicro	51000A	4466-32
		51000B	4462-31
5101	AMI	S5101-8	3773-115
		S5101L	588-21
			3773-105
		S5101L-1	3773-78
		S5101L-3	3773-106
	Datel	**ADC-5101**	**★2860**
			2625-50
		ADC-5101E	**★2860**
			2625-51
		ADC-5101H	**★2860**
			2625-52
	DDC	DDC-5101	2625-49
	ITT	ITT5101S	3772-64
	MicroNet	**MN5101**	**★3043**
			2625-53
		MN5101H	**★3043**
			2625-54
	Motorola	MCM5101	588-29
		MCM5101-65	3773-110
		MCM5101-80	3773-119
	NEC	uPD5101L	588-36
			3773-112
		uPD5101L-1	3773-84
	Panasonic	MN5101	3773-120
	RCA	**MWS5101**	**★1594**
	Sharp	LH-5101S	3773-41
		LH-5101W	3773-121
	SSS	883/5101-4	3773-122
		SCM5101	588-39
			¶ 322-13
		SCM5101-1	3773-85
			¶ 322-13
		SCM5101-1A	3773-60
			¶ 322-13
		SCM5101-1B	3773-21
			¶ 322-13
		SCM5101-3	3773-113
			¶ 322-13
5101DL3			
	RCA	**MWS5101DL3**	**★1594**
			3773-58

¶ Indicates page number in Application Note Directory.
★ Indicates addition data is provided on the page noted.

Base Number	Source	Device	Page-Line
5101EL2			
	RCA	**MWS5101EL2**	★ **1594**
			3773-20
5101EL3			
	RCA	**MWS5101EL3**	★ **1594**
			3773-59
5101L1	AMI	S5101L1	3773-79
5101L3	AMI	S5101L3	3773-107
5101L8	AMI	S5101L8	3773-116
5102	**Harris**	**HA-5102-2**	★ **3459**
			3205-39
		HA-5102-5	★ **3459**
			3205-40
	Mostek	MK5102-5	3218-141
			¶ 298-13
	Sharp	LH-5102	3774-3
5103	Mostek	MK5103-5	3219-1
			¶ 298-13
5104	**Harris**	**HA-5104-2**	★ **3459**
			3210-37
		HA-5104-5	★ **3459**
			3210-38
	OKI	**MSM5104**	★ **4118**
	RCA	CMM5104/1RZ	
			3780-76
5105	Harris	HA-5105-5	3188-29
5106	Reticon	R5106	3238-88
5108	**Intersil**	**IH5108C**	★ **3026**
			2623-80
		IH5108M	★ **3026**
			2623-79
511	RCA	GP511AD	1337-86
5110	**Harris**	**HA-5110-2**	★ **3442**
			3186-2
		HA-5110-5	★ **3442**
			3186-5
	Intersil	IH5110	3238-22
	TI	**TMS5110**	★ **1717**
			3169-97
5111	Intersil	IH5111	3238-23
	Panasonic	AN5111	3172-127
5112	**Harris**	**HA-5112**	★ **3459**
			3180-122
		HA-5112-2	★ **3459**
			3205-41
		HA-5112-5	★ **3459**
			3205-42
	Intersil	IH5112	3238-24
	Sanyo	LA5112	3171-134
5113	Intersil	IH5113	3238-25
5114	**Harris**	**HA-5114**	★ **3459**
			3180-123
		HA-5114-2	★ **3459**
			3210-39
		HA-5114-5	★ **3459**
			3210-40
	Intersil	IH5114	3238-26
	OKI	**MSM5114-2**	★ **4118**
			3776-47
	RCA	CMM5114/1RZ	
			3776-108
	RCA	**MWS5114-1**	★ **1594**
			3776-109
		MWS5114-2	★ **1594**
			3776-88
		MWS5114-3	★ **1594**
			3776-48
5115	Harris	HA-5115-5	3188-30
	Intersil	IH5115	3238-27
	OKI	**MSM5115**	★ **4118**
5116	Fairchild	5116	3216-106
	Harris	HC5116A	3216-109
	Mostek	MK5116	3216-113
	National	TP5116	3216-117
		TP5116A	3216-118
	SGS	M5116	3216-120
5117	National	TP5117A	3216-103
5118	Signetics	NE5118	2640-17
		SE5118	2640-18
5119	**Signetics**	**NE5119**	★ **3611**
			2639-40
		SE5119	★ **3611**
			2639-41
512	AD	AD512K	3193-20
		AD512S	3193-22
	Cybernetic	CY512	2680-122
			(Continued)

Base Number	Source	Device	Page-Line
512	Cybernetic	CY512	1354-3
	Dionics	DI512	2663-89
	Panasonic	MEL512KV	3234-57
		MN512	3234-60
	Reticon	RL512C	3234-82
		RL512EC	3234-83
		RL512G	3234-84
		RL512S	3234-85
		RL512SF	3234-86
		RL512SFX	3234-35
5120	**MicroNet**	**MN5120**	★ **3043**
			2626-34
		MN5120H	★ **3043**
			2626-35
	Panasonic	AN5120	3172-128
5121	**MicroNet**	**MN5121**	★ **3043**
			2626-36
		MN5121H	★ **3043**
			2626-37
5122	**MicroNet**	**MN5122**	★ **3043**
			2626-38
		MN5122H	★ **3043**
			2626-39
5123	**MicroNet**	**MN5123**	★ **3043**
			2626-40
		MN5123H	★ **3043**
			2626-41
5128	**OKI**	**MSM5128**	★ **4118**
			3778-110
513	Dionics	DI513	2663-99
5130	**Harris**	**HA-5130-2**	★ **3444**
			3181-29
		HA-5130-5	★ **3444**
			3181-31
	MicroNet	**MN5130**	★ **3043**
			2626-23
		MN5130H	★ **3043**
			2626-24
5131	HybridSys	HS5131B	2628-5
		HS5131C	2628-6
	MicroNet	**MN5131**	★ **3043**
			2626-25
		MN5131H	★ **3043**
			2626-26
5132	**MicroNet**	**MN5132**	★ **3043**
			2626-27
		MN5132H	★ **3043**
			2626-28
5133	**MicroNet**	**MN5133**	★ **3043**
			2626-29
		MN5133H	★ **3043**
			2626-30
	SEEQ	**5133-2**	★ **513**
			★ **4137**
			3766-81
		5133-200	★ **513**
			★ **4137**
			3766-82
		5133-250	★ **513**
			★ **4137**
			3766-92
		5133-3	★ **513**
			★ **4137**
			3766-102
		5133-300	★ **513**
			★ **4137**
			3766-103
		5133-4	★ **513**
			★ **4137**
			3766-106
		5133-450	★ **513**
			★ **4137**
			3766-115
		M5133-250	★ **513**
			3766-93
		M5133-450	★ **513**
			3766-116
5134	**SEEQ**	**5134**	★ **4137**
5135	Harris	HA-5135-2	3181-30
		HA-5135-5	3181-32
514	AD	AD514J	3203-16
		AD514K	3202-43
		AD514L	3202-40
		AD514S	3202-44
	Dionics	DI514	2663-100
		DI514A	2663-101
			(Continued)

Base Number	Source	Device	Page-Line
514	TI	TL514C	3161-12
		TL514M	3160-48
5140	Dionics	DI5140	2663-27
	Intersil	**IH5140C**	★ **3028**
			2615-4
		IH5140M	★ **3028**
			2615-1
	LSILogic	**LL5140**	★ **4762**
			4465-47
	MicroNet	**MN5140**	★ **3043**
			2626-15
		MN5140H	★ **3043**
			2626-16
5141	**Harris**	**HA-5141**	★ **3446**
			3199-19
		HA-5141A	★ **3446**
			3198-32
	Intersil	**IH5141C**	★ **3028**
			2615-63
		IH5141M	★ **3028**
			2615-29
	MicroNet	**MN5141**	★ **3043**
			2626-17
		MN5141H	★ **3043**
			2626-18
5142	Harris	HA-5142	3180-5
			3209-6
		HA-5142A	3208-20
	Intersil	**IH5142C**	★ **3028**
			2617-127
		IH5142M	★ **3028**
			2617-110
	MicroNet	**MN5142**	★ **3043**
			2626-19
		MN5142H	★ **3043**
			2626-20
5143	**Intersil**	**IH5143C**	★ **3028**
			2618-119
		IH5143M	★ **3028**
			2618-100
	MicroNet	**MN5143**	★ **3043**
			2626-21
		MN5143H	★ **3043**
			2626-22
	SEEQ	**5143-2**	★ **513**
			3766-125
		5143-200	★ **513**
			3766-126
		5143-250	★ **513**
			3767-6
		5143-3	★ **513**
			3767-15
		5143-300	★ **513**
			3767-16
		5143-4	★ **513**
			3767-26
		5143-450	★ **513**
			3767-27
		M5143-250	★ **513**
			3767-7
		M5143-450	★ **513**
			3767-28
5144	Harris	HA-5144	3180-43
		HA-5144A	3212-23
	Intersil	**IH5144C**	★ **3028**
			2619-97
		IH5144M	★ **3028**
			2619-98
5145	**Intersil**	**IH5145C**	★ **3028**
			2620-7
		IH5145M	★ **3028**
			2619-111
515	**AD**	**AD515J**	★ **3351**
			3192-10
		AD515K	★ **3351**
			3187-34
		AD515L	★ **3351**
			3187-33
	Barvon	**BC515**	★ **4626**
			4466-55
			4467-11
	Siliconix	**DG515A**	★ **3082**
			2619-85
		DG515B	★ **3082**
			2619-86
			(Continued)

Base Number	Source	Device	Page-Line
515	**Siliconix**	**DG515C**	★ **3082**
			2619-87
5150	**MicroNet**	**MN5150**	★ **3043**
			2626-31
	Mitel	MA5150	4465-36
51500	GTEMicro	51500A	4466-33
		51500B	4462-32
5151	Fairchild	5151	3216-107
	Mostek	MK5151	3216-114
5155	MMI	5155	3755-9
5156	Fairchild	5156	3216-44
	Harris	HC5156A	3216-46
	Mostek	MK5156	3216-49
	National	TP5156	3216-51
		TP5156A	3216-52
	SGS	M5156	3216-54
516	**Harris**	**HI516-2**	★ **2907**
			2624-68
		HI516-5	★ **2907**
			2624-69
	Siliconix	**DG516A**	★ **3082**
			2619-90
		DG516B	★ **3082**
			2619-91
		DG516C	★ **3082**
			2619-92
5160	**Harris**	**HA-5160**	★ **3448**
			3176-95
			3180-140
		HA-5160-2	★ **3448**
			3192-23
		HA-5160-5	★ **3448**
			3192-24
5162	Harris	HA-5162	3176-96
			3180-141
		HA-5162-5	3202-19
517	**AD**	**AD517J**	★ **3351**
			3183-57
		AD517K	★ **3351**
			3182-4
		AD517L	★ **3351**
			3181-19
		AD517S	★ **3351**
			3182-5
	MicroPwr	MP517J	3183-58
		MP517K	3182-6
		MP517L	3181-20
		MP517S	3182-7
5170	**Harris**	**HA-5170-2**	★ **3450**
			3185-45
		HA-5170-5	★ **3450**
			3186-8
	Mostek	MK5170	3216-162
5175	Mostek	MK5175	3217-54
518	**AD**	**AD518J**	★ **3353**
			3199-12
		AD518K	★ **3353**
			3193-42
		AD518S	★ **3353**
			3193-43
	Harris	**HI518-2**	★ **2910**
			2624-19
		HI518-5	★ **2910**
			2624-20
5180	Dionics	DI5180	2663-28
	Harris	**HA-5180**	★ **3452**
			3185-17
		HA-5180-2	★ **3452**
			3192-11
		HA-5180-5	★ **3452**
			3192-12
		HA-5180A	★ **3452**
			3185-18
		HA-5180A-2	★ **3452**
			3185-21
		HA-5180A-5	★ **3452**
			3185-22
5181	Motorola	MHW5181	3170-77
5182	Motorola	MHW5182	3170-78
5188	**OKI**	**MSM5188**	★ **4118**
5190	**Harris**	**HA-5190**	★ **3455**
			3176-97
			3197-30
			¶ 294-11
			¶ 297-13

Arranged alphanumerically from left to right.

© IC MASTER 1984

Base Number	Source	Device	Page-Line
5195	Harris	HA-5195	3176-88
			3197-38
			¶ 294-11
			¶ 297-13
51L01	Motorola	MCM51L01-45	3773-83
		MCM51L01-65	3773-111
52	**Burr-Brown**	**PCM52**	★2849
			2659-26
			¶ 281-13
	Burr-Brown	PCM52	3164-37
	Burr-Brown	**VFC52**	★2849
			3233-107
			3239-55
		VFC52M	★2849
			3233-108
			3239-56
	Rockwell	A52XX	1339-104
520	**Barvon**	**BC520**	★4626
			4467-1
			4467-10
			4467-12
	Signetics	TCA520B	3198-34
	Siliconix	**SI520**	★3083
			2628-2
	Siliconix	SI520	3233-33
	Telefunken	TBA520	3171-3
	TI	TL520	2628-3
			3233-34
5200	**AD**	**AD5200**	★2838
	Curtis	PR5200B	4351-8
	DDC	DDC-5200-1	2633-22
		DDC5200-3	2633-26
	Intersil	**IH5200**	★3031
			2615-56
		IH5200C	★3031
			2615-72
	Intersil	IM5200	4482-70
	MicroNet	**MN5200**	★3043
			2633-30
			¶ 284-1
		MN5200H	★3043
			2633-31
			¶ 284-1
	Plessey	**CLA5200**	★4817
	Siliconix	**SD5200**	★3080
			2617-81
	TI	TMS5200	3169-98
52000	GTEMicro	52000B	4462-33
52001	NCR	NCR52001	3758-32
			¶ 322-11
52002	NCR	NCR52002	3758-37
			¶ 322-11
52004	NCR	NCR52004	3758-41
			¶ 322-11
5201	AD	AD5201	2633-38
		AD5201A	2634-43
		AD5201B	2633-7
		AD5201S	2634-44
		AD5201T	2633-8
	DDC	DDC-5201-1	2633-23
		DDC5201-3	2633-27
	Intersil	IH5201C	2616-110
		IH5201M	2616-100
	MicroNet	**MN5201**	★3043
			2633-32
		MN5201H	★3043
			2633-33
5202	AD	AD5202	2633-39
		AD5202A	2634-45
		AD5202B	2633-9
		AD5202S	2634-46
		AD5202T	2633-10
	DDC	DDC-5202-1	2633-24
		DDC5202-3	2633-28
	MicroNet	**MN5202**	★3043
			2633-34
		MN5202H	★3043
			2633-35
5203	AD	AD5203	2633-40
	MicroNet	**MN5203**	★3043
			2633-14
		MN5203H	★3043
			2633-15
5204	AD	AD5204	2633-41
		AD5204A	2634-47
		AD5204S	2634-48
			(Continued)

Base Number	Source	Device	Page-Line
5204	AD	AD5204T	2633-11
	MicroNet	**MN5204**	★3043
			2633-16
		MN5204H	★3043
			2633-17
	OKI	**MSM5204**	★4118
5205	AD	AD5205	2633-42
		AD5205A	2634-49
		AD5205B	2633-12
		AD5205S	2634-50
		AD5205T	2633-13
	MicroNet	**MN5205**	★3043
			2633-18
		MN5205H	★3043
			2633-19
	OKI	**MSM5205**	★4118
			3169-107
5206	AD	AD5206	2633-43
	DDC	DDC-5206-1	2633-25
		DDC5206-3	2633-29
	MicroNet	**MN5206**	★3043
			2633-36
		MN5206H	★3043
			2633-37
5208	**Intersil**	**IH5208C**	★3032
			2622-121
		IH5208M	★3032
			2622-120
521	AD	AD521J	3155-60
		AD521K	3155-61
		AD521L	3155-62
		AD521S	3155-63
	Plessey	SL521	3156-138
			¶ 297-8
	Sanyo	STK521	3223-76
	Siemens	TAA521	3200-6
	Signetics	**NE521**	★3620
			3161-59
		SE521	★ 526
			★3620
			3161-60
	TI	TL521	2628-19
5210	**AD**	**AD5210**	★2838
			2632-19
	Datel	**ADC-5210**	★2860
			2631-43
		ADC-5210E	★2860
			2631-44
		ADC-5210H	★2860
			2631-45
	HybridSys	**HS5210B**	★2982
			2635-19
		HS5210C	★2982
			2635-20
	DDC	DDC-5210-1	2632-2
		DDC5210-3	2632-6
	MicroNet	**MN5210**	★3043
			2632-10
			¶ 284-1
		MN5210H	★3043
			2632-11
			¶ 284-1
	Panasonic	AN5210	3171-167
	TeledyneP	TP5210	2632-18
5211	**AD**	**AD5211**	★2838
			2632-20
	Datel	**ADC-5211**	★2860
			2631-46
		ADC-5211E	★2860
			2631-47
		ADC-5211H	★2860
			2631-48
	HybridSys	**HS5211B**	★2982
			2635-21
		HS5211C	★2982
			2635-22
	DDC	DDC-5211-1	2632-3
		DDC5211-3	2632-7
	MicroNet	**MN5211**	★3043
			2632-12
		MN5211H	★3043
			2632-13
52116	National	MM52116	3784-33
		MM52116FDW	3755-6
		MM52116FDX	3755-31

Base Number	Source	Device	Page-Line
5212	AD	AD5212	2632-21
	Datel	**ADC-5212**	★2860
			2631-49
		ADC-5212E	★2860
			2631-50
		ADC-5212H	★2860
			2631-51
	HybridSys	**HS5212B**	★2982
			2635-23
		HS5212C	★2982
			2635-24
	DDC	DDC-5212-1	2632-4
		DDC5212-3	2632-8
	MicroNet	**MN5212**	★3043
			2632-14
		MN5212H	★3043
			2632-15
5213	AD	AD5213	2632-22
	Datel	**ADC-5213**	★2860
			2631-27
		ADC-5213E	★2860
			2631-28
		ADC-5213H	★2860
			2631-29
	HybridSys	**HS5213B**	★2982
			2635-25
		HS5213C	★2982
			2635-26
	MicroNet	**MN5213**	★3043
			2631-36
		MN5213H	★3043
			2631-37
	SEEQ	5213-250	3758-69
			¶ 318-6
		5213-350	3758-90
			¶ 318-6
		5213H-250	3758-70
			¶ 318-6
		5213H-350	3758-91
			¶ 318-6
		M5213-350	3758-92
52132	National	MM52132	3785-11
5214	**AD**	**AD5214**	★2838
			2632-23
	Datel	**ADC-5214**	★2860
			2631-30
		ADC-5214E	★2860
			2631-31
		ADC-5214H	★2860
			2631-32
	HybridSys	**HS5214B**	★2982
			2635-27
		HS5214C	★2982
			2635-28
	MicroNet	**MN5214**	★3043
			2631-38
		MN5214H	★3043
			2631-39
5215	AD	AD5215	2632-24
	Datel	**ADC-5215**	★2860
			2631-33
		ADC-5215E	★2860
			2631-34
		ADC-5215H	★2860
			2631-35
	HybridSys	**HS5215B**	★2982
			2635-29
		HS5215C	★2982
			2635-30
	MicroNet	**MN5215**	★3043
			2631-40
		MN5215H	★3043
			2631-41
52150	TI	TM52150-4	3774-4
5216	AD	AD5216	2632-25
	Datel	**ADC-5216**	★2860
			2631-52
		ADC-5216E	★2860
			2631-53
		ADC-5216H	★2860
			2631-54
	HybridSys	**HS5216B**	★2982
			2635-31
		HS5216C	★2982
			2635-32
	DDC	DDC-5216-1	2632-5
			(Continued)

Base Number	Source	Device	Page-Line
5216	DDC	DDC5216-3	2632-9
	MicroNet	**MN5216**	★3043
			2632-16
		MN5216H	★3043
			2632-17
52164	National	MM52164	3786-78
5218	**OKI**	**MSM5218**	★4118
			3169-82
5219	OKI	MSM5219	2663-65
522	AD	AD522A	3155-84
			3185-11
			¶ 292-7
		AD522B	3155-85
			3184-19
			¶ 292-7
		AD522S	3155-86
			3184-23
			¶ 292-7
	Sanyo	STK522	3224-127
	Signetics	NE522	3161-61
		SE522	3161-62
	TI	TL522	2625-39
5220	**LSILogic**	**LL5220**	★4762
			4465-48
	Panasonic	AN5220	3171-168
	TI	**TMS5220**	★1717
			3169-99
52201	NCR	NCR52201	3758-50
52210	NCR	NCR52210	3758-14
			¶ 322-11
52211	NCR	NCR52211	3758-29
			¶ 322-11
52212	NCR	NCR52212	3758-33
			¶ 322-11
5223	SEEQ	5223-200	3758-108
523	AD	AD523J	3203-12
		AD523K	3202-39
		AD523L	3202-38
	Plessey	SL523	3156-139
	Sanyo	STK523	3225-82
5233	SSS	SCL5233	3166-7
			3166-155
5238	SSS	SCL5238	3166-156
524	**AD**	**AD524A**	★3354
			3184-53
		AD524B	★3354
			3183-4
		AD524C	★3354
			3182-14
		AD524S	★3354
			3183-12
	Harris	**HI524-2**	★2913
			2623-15
		HI524-5	★2913
			2623-16
5240	**AD**	**AD5240K**	★2839
			2630-41
		AD5240S	★2839
			2630-42
	Dionics	DI5240	2663-29
	DDC	DDC-5240-10	2629-19
		DDC-5240-12	2630-44
			2634-24
	MicroNet	**MN5240-10**	★3043
			2629-18
		MN5240-12	★3043
			2630-43
5243	**MicroNet**	**MN5243**	★3043
			2630-28
5244	**MicroNet**	**MN5244**	★3043
5245	**MicroNet**	**MN5245A**	★3043
			2630-23
5246	**MicroNet**	**MN5246**	★3043
5247	**MicroNet**	**MN5247**	★3043
			2630-21
5248	**MicroNet**	**MN5248**	★3043
5250	HybridSys	HS5250B	2634-51
		HS5250C	2633-49
	MicroNet	MN5250	2633-53
		MN5250H	2633-54
	Panasonic	AN5250	3171-169
5251	HybridSys	HS5251B	2634-52
		HS5251C	2633-50
	MicroNet	MN5251	2633-55
		MN5251H	2634-1

¶ Indicates page number in Application Note Directory.
★ Indicates addition data is provided on the page noted.

Base Number	Source	Device	Page-Line
5252	HybridSys	HS5252B	2634-53
		HS5252C	2633-51
	MicroNet	MN5252	2634-2
		MN5252H	2634-3
5253	HybridSys	HS5253B	2634-54
		HS5253C	2633-52
	MicroNet	MN5253	2634-4
		MN5253H	2634-5
5255	MMI	5255-1	3783-82
5256	MMI	5256-1	3783-83
5257	National	MM5257	3780-125
			¶ 322-17
		MM5257-25	3780-63
			¶ 322-17
		MM5257-25L	3780-64
			¶ 322-17
		MM5257-3	3780-95
			¶ 322-17
		MM5257-3L	3780-96
			¶ 322-17
		MM5257L	3780-126
			¶ 322-17
526	**Siliconix**	**DG526**	★3082
			2624-63
		DG526A	★3082
			2624-39
		DG526B	★3082
			2624-40
		DG526C	★3082
			2624-41
5260	**MicroNet**	**MN5260**	★3043
			2635-51
	MMI	5260-1	3783-78
	Panasonic	AN5260	3171-170
5261	MMI	5261-1	3783-79
5263	MicroNet	MN5263	2635-38
527	**Signetics**	**NE527**	★3621
			3160-17
		SE527	★3621
			3159-56
	Siliconix	**DG527**	★3082
			2624-12
		DG527A	★3082
			2623-109
		DG527B	★3082
			2623-110
		DG527C	★3082
			2623-111
5275	MMI	5275-1	3783-111
5276	MMI	5276-1	3783-112
528	AD	AD528J	3192-17
		AD528K	3187-48
		AD528S	3187-49
	Siliconix	**DG528A**	★3082
			2624-13
		DG528C	★3082
			2624-18
5280	Dionics	DI5280	2663-30
	MicroNet	**MN5280**	★3043
			2636-47
	MMI	5280-1	3783-43
		5280-2	3783-34
52801	NCR	NCR52801	3758-4
5281	MMI	5281-1	3783-45
		5281-2	3783-35
5282	**MicroNet**	**MN5282**	★3043
			2636-42
	MMI	5282-1	3783-44
5283	MMI	5283-1	3783-46
52832	NCR	NCR52832	3758-119
			¶ 318-12
5284	**MicroNet**	**MN5284**	★3043
			2636-38
52864	NCR	NCR52864	3759-1
			¶ 318-12
529	**Signetics**	**NE529**	★3622
			3160-18
		SE529	★3622
			3159-57
	Siliconix	**DG529A**	★3082
			2623-21
		DG529C	★3082
			2623-22
5290	~~MicroNet~~	~~MN5290~~	~~★3043~~
			2636-32
	MMI	5290	3755-32
			(Continued)

Base Number	Source	Device	Page-Line
5290	National	MM5290-1	3768-76
			¶ 320-12
		MM5290-2	3768-92
			¶ 320-12
		MM5290-3	3768-110
			¶ 320-12
		MM5290-4	3769-11
			¶ 320-12
5291	**MicroNet**	**MN5291**	★3043
			2636-33
	MMI	5291	3755-33
5292	MMI	5292	3783-108
5293	MMI	5293	3783-109
52B13	**SEEQ**	**52B13-200**	★ 516
			★4133
			3758-58
			¶ 319-1
		52B13-250	★ 516
			★4133
			3758-73
			¶ 319-1
		52B13-350	★ 516
			★4133
			3758-94
			¶ 319-1
		52B13H-200	★ 516
			★4133
			3758-59
			¶ 319-1
		52B13H-250	★ 516
			★4133
			3758-71
			¶ 319-1
		52B13H-350	★ 516
			★4133
			3758-95
			¶ 319-1
		~~M52B13-300~~	~~★ 516~~
			3758-82
		M52B13H-300	★ 516
			3758-79
52B23	**SEEQ**	**52B23-200**	★4133
			3758-109
		52B23-250	★4133
			3758-112
		52B23-3	★4133
			3758-114
		52B23-300	★4133
			3758-115
		52B23H-200	★4133
			3758-110
		52B23H-250	★4133
			3758-113
		52B23H-3	★4133
			3758-116
		52B23H-300	★4133
			3758-117
52B33	SEEQ	52B33-200	3759-3
		52B33-250	3759-8
		52B33-3	3759-11
		52B33-300	3759-12
		52B33H-200	3759-4
		52B33H-250	3759-9
		52B33H-3	3759-13
		52B33H-300	3759-14
53	**Burr-Brown**	**PCM53**	★2849
			2659-27
			¶ 281-13
	Burr-Brown	PCM53	3164-38
530	AD	AD530J	3235-48
			¶ 309-9
		AD530K	3235-49
			¶ 309-9
		AD530L	3235-50
			¶ 309-9
		AD530S	3235-51
			¶ 309-9
	National	TBA530	3170-125
	Signetics	NE530	3196-25
		SE530	3191-13
	Telefunken	TBA530	3171-4
	TI	TL530	2627-37
5300	MMI	5300-1	3760-119
	Mostek	MK5300	3216-94
	Plessey	**CLA5300**	★4817

Base Number	Source	Device	Page-Line
5301	MMI	5301-1	3760-123
	National	NF5301	3173-92
5303	National	MM5303	2686-52
			¶ 266-13
5305	MMI	5305-1	3761-71
5306	MMI	5306-1	3761-73
5307	National	MM5307	640-13
			2685-40
5308	MMI	5308-1	3761-18
5309	MMI	5309-1	3761-20
	National	MM5309	3166-130
			¶ 315-3
531	**AD**	**AD531J**	★3363
			3235-52
			¶ 309-9
		AD531K	★3363
			3235-53
			¶ 309-9
		AD531L	★3363
			3235-54
			¶ 309-9
		AD531S	★3363
			3235-55
			¶ 309-9
	Plessey	SL531C	3156-131
	Sanyo	STK531	3223-123
	Signetics	NE531	3199-18
		SE531	3196-43
	TI	TL531	2628-28
5310	Harris	HA-5310	3238-15
	Panasonic	AN5310	3170-138
53100	National	MM53100	3172-47
			¶ 304-4
53104	National	MM53104	3173-2
53105	National	MM53105	3172-48
53107	National	MM53107	590-21
			¶ 304-4
53108	National	MM53108	3166-86
53111	National	MM53111	3166-131
			¶ 315-3
	Panasonic	AN5311	3170-139
53110	National	MM53110	3166-132
53113	National	MM53113	3166-104
5312	National	MM5312	3166-133
			¶ 315-3
53124	National	MM53124	3166-105
53125	National	MM53125	3219-81
53128	**RCA**	**CDM53128**	★1593
			3787-2
5313	National	MM5313	3166-134
53130	National	MM53130	3219-82
5314	National	MM5314	3166-135
53143	National	MM53143	3217-10
53144	National	MM53144	3217-11
5315	National	MM5315	3166-136
			¶ 315-3
5316	National	MM5316	3166-87
5318	National	MM5318	3166-137
53190	National	MM53190	3217-12
532	**AD**	**AD532J**	★3363
			3235-56
			¶ 309-9
		AD532K	★3363
			3235-57
			¶ 309-9
		AD532S	★3363
			3235-58
			¶ 309-9
	Plessey	SL532C	3156-132
	Sanyo	STK532	3225-27
	Signetics	NE532	3180-32
			3208-24
		SA532	3209-12
	Signetics	**SE532**	★ 526
			3180-33
			3207-15
	Sprague	UHC/D-532	614-20
			2683-65
		UHP-532	614-24
			2683-69
	TI	TL532	2627-38
	TI	**TLC532**	★ 541
5320	**Harris**	**HA-5320-2**	★2958
			3238-16
		HA-5320-5	★2958
			3238-17
			(Continued)

Base Number	Source	Device	Page-Line
5320	**LSILogic**	**LL5320**	★4762
			4465-49
	Panasonic	AN5320	3170-140
	STDMicro	5320	1955-27
5321	National	MM5321	3170-53
	STDMicro	5321	1955-30
5322	National	MM5322	3166-162
	STDMicro	5322	1955-31
53226	National	MM53226	3169-5
5323	STDMicro	5323	1955-28
5324	STDMicro	5324	1955-29
53256	**OKI**	**MSM53256**	★4118
	RCA	**CDM53256**	★1593
			3787-58
5327	STDMicro	5327	1955-32
5328	STDMicro	5328	1955-33
5329	STDMicro	5329	1955-34
533	**AD**	**AD533J**	★3363
			3235-59
			¶ 309-9
		AD533K	★3363
			3235-60
			¶ 309-9
		AD533L	★3363
			3235-61
			¶ 309-9
		AD533S	★3363
			3235-62
			¶ 309-9
	Sanyo	STK533	3225-115
	Sprague	UHC/D-533	614-21
			2683-66
		UHP-533	614-25
			2683-70
	TI	TL533	2628-29
	TI	**TLC533**	★ 541
5330	MMI	5330-1	3760-51
	Panasonic	AN5330	3170-141
5331	MMI	5331-1	3760-53
	SSS	SCL5331-5	3173-94
		SCL5331-6	3173-95
5332	**RCA**	**CDM5332**	★1593
			3784-100
	Toshiba	TC5332	3784-125
5333	**RCA**	**CDM5333**	★1593
			3784-101
	Toshiba	TC5333	3784-126
5334	Toshiba	TC5334	3784-127
5335	Toshiba	TC5335	3784-128
534	**AD**	**AD534J**	★3363
			3235-63
			¶ 309-9
		AD534K	★3363
			3235-64
			¶ 309-9
		AD534L	★3363
			3235-65
			¶ 309-9
		AD534S	★3363
			3235-66
			¶ 309-9
		AD534T	★3363
			3235-67
			¶ 309-9
	Signetics	SA534	3180-47
5340	MMI	5340-1	3762-41
		5340-2	3762-51
5341	**Intersil**	**IH5341**	★3033
	MMI	5341-1	3762-44
		5341-2	3762-35
	SSS	SCL5341	3173-96
5348	MMI	5348-1	3762-40
5349	MMI	5349-1	3762-43
535	AD	AD535J	3233-66
		AD535K	3233-67
5350	MMI	5350-1	3763-5
5351	MMI	5351-1	3763-8
5352	MMI	5352-1	3763-6
5353	MMI	5353-1	3763-9
536	**AD**	**AD536A**	★3363
			3237-146
			¶ 309-9
		AD536AJ	★3363
			3237-147
			¶ 309-9
		AD536AK	★3363
			(Continued)

Arranged alphanumerically from left to right.

© IC MASTER 1984

Base Number	Source	Device	Page-Line
536	**AD**	**AD536AK**	**3237-148**
			¶ 309-9
		AD536AS	**★3363**
			3237-149
			¶ 309-9
5364	GTEMicro	G5364-3	3785-121
		G5364-4	3786-70
	RCA	**CDM5364**	**★1593**
			3785-73
	Toshiba	TC5364	3785-76
5365	GTEMicro	G5365-3	3785-122
		G5365-4	3786-71
	RCA	CDM5365	3785-80
	Toshiba	TC5365	3785-77
5366	Toshiba	TC5366	3785-78
5368	National	MM5368	590-46
5369	National	MM5369	590-47
537	AD	AD537J	3239-20
			¶ 280-6
		AD537K	3239-21
			¶ 280-6
		AD537S	3239-22
			¶ 280-6
5378	National	MM5378	3166-138
538	Signetics	NE538	3196-29
		SE538	3191-12
5380	MMI	5380-1	3763-111
		5380-2	3763-97
	Mostek	MK5380	3219-77
			¶ 299-11
5381	MMI	5381-1	3763-112
		5381-2	3763-77
5382	Mostek	MK5382	3219-78
5387	National	MM5387	3166-88
5388	MMI	5388-1	3764-64
	NEC	uPD5388	3166-93
5389	MMI	5389-1	3764-65
		5389-2	3764-53
	Mostek	MK5389	3219-79
539	**AD**	**AD539J**	**★3362**
			★3363
			3235-26
		AD539K	**★3362**
			★3363
			3235-27
		AD539S	**★3362**
			★3363
			3235-28
	Harris	**HI539-2**	**★2917**
			2622-118
		HI539-5	**★2917**
			2622-119
5393	National	MM5393	3217-13
5394	National	MM5394	3217-14
5395	National	MM5395	3219-83
53B33	**SEEQ**	**53B33**	**★4133**
53D1641			
	MMI	**53D1641**	**★4041**
			3765-97
53LS140			
	MMI	53LS140	3760-120
53LS141			
	MMI	53LS141	3760-124
53LS240			
	MMI	53LS240	3761-72
53LS241			
	MMI	53LS241	3761-74
53RA1681			
	MMI	**53RA1681**	**★4035**
			3764-97
		53RA1681A	**★4035**
			3764-93
53RA441			
	MMI	**53RA441**	**★4030**
			3762-108
53RS1681			
	MMI	**53RS1681**	**★4038**
			3764-98
		53RS1681A	**★4038**
			3764-94
53RS881			
	MMI	**53RS881**	**★4032**
			3763-55
53S080	**MMI**	**53S080**	**★4026**
			4482-87
	MMI	53S080	3760-25

Base Number	Source	Device	Page-Line
53S081	**MMI**	**53S081**	**★4026**
			4482-88
	MMI	53S081	3760-28
53S140	**MMI**	**53S140**	**★4026**
			3760-92
53S141	**MMI**	**53S141**	**★4026**
			3760-96
53S1641			
	MMI	**53S1641**	**★4026**
			3765-116
		53S1641A	**★4026**
			4482-90
	MMI	53S1641A	3765-106
53S1681			
	MMI	**53S1681**	**★4026**
			3765-24
		53S1681A	**★4026**
			3764-124
53S240	**MMI**	**53S240**	**★4026**
			3761-41
53S241	**MMI**	**53S241**	**★4026**
			3761-44
53S3281			
	MMI	**53S3281**	**★4026**
53S441	**MMI**	**53S441**	**★4026**
			3762-106
		53S441A	**★4026**
			4482-82
	MMI	53S441A	3762-95
53S841	**MMI**	**53S841**	**★4026**
			3764-37
		53S841A	**★4026**
			4482-84
	MMI	53S841A	3764-28
54	Amperex	BGY54A	3170-57
	Motorola	**MC54HCSeries**	**★824**
540	**AD**	**AD540J**	**★3351**
			3203-17
		AD540K	**★3351**
			3202-46
		AD540S	**★3351**
			3202-48
	National	TBA540	3170-126
	Telefunken	TBA540	3171-5
	TI	**TLC540**	**★541**
			★3103
			2626-44
5400	CalDevices	HCS5400	4463-17
	Fairchild	5400	621-149
	Ferranti	ZN5400	621-151
	LSILogic	**LC5400**	**★4762**
			4468-20
	National	DM5400	621-155
	Plessey	**CLA5400**	**★4817**
	Signetics	**5400**	**★528**
			★860
			621-158
	TI	**SN5400**	**★920**
			621-160
5401	Fairchild	5401	621-73
	Ferranti	ZN5401	621-77
	National	DM5401	621-85
	TI	**SN5401**	**★920**
			621-93
54016	TI	TM54016-15	3778-85
5402	Fairchild	5402	624-40
	Ferranti	ZN5402	624-42
	National	DM5402	624-48
		MM5402	3166-89
	Signetics	**5402**	**★860**
			624-50
	TI	**SN5402**	**★920**
			624-54
5403	Fairchild	5403	621-74
	Ferranti	ZN5403	621-78
	National	DM5403	621-86
	Signetics	**5403**	**★860**
			621-90
	TI	**SN5403**	**★921**
			621-94
54030	**NEC**	**μPB54030**	**★4809**
5404	Fairchild	5404	607-40
	Ferranti	ZN5404	607-42
	National	DM5404	607-46
	Signetics	**5404**	**★528**
			★860
			(Continued)

Base Number	Source	Device	Page-Line
5404	**Signetics**	**5404**	**607-49**
	TI	**SN5404**	**★921**
			607-54
5405	Fairchild	5405	606-117
	Ferranti	ZN5405	606-119
	National	DM5405	606-123
		MM5405	3166-90
	Signetics	**5405**	**★860**
			606-125
	TI	**SN5405**	**★921**
			606-128
5406	Fairchild	5406	614-70
	National	DM5406	614-74
	Signetics	**5406**	**★860**
			614-76
	TI	**SN5406**	**★922**
			614-78
5407	Fairchild	5407	614-47
	National	DM5407	614-51
	Signetics	**5407**	**★860**
			614-53
	TI	**SN5407**	**★922**
			614-55
5408	Fairchild	5408	619-79
	Ferranti	ZN5408	619-81
	National	DM5408	619-85
	Signetics	**5408**	**★860**
			619-87
	TI	**SN5408**	**★922**
			619-89
5409	Fairchild	5409	619-42
	Ferranti	ZN5409	619-44
	National	DM5409	619-48
	TI	**SN5409**	**★923**
			619-50
541	HybridSys	ADC541B-8	2626-11
		ADC541C-8	2626-12
	Plessey	SL541	3156-99
	Sanyo	STK541	3223-77
	TI	**TLC541**	**★541**
			★3103
			2628-12
5410	Fairchild	5410	620-120
	Ferranti	ZN5410	620-122
	Motorola	MC5410	620-125
	National	DM5410	620-128
	Panasonic	AN5410	3171-68
	Signetics	**5410**	**★860**
			620-131
		NE5410	**★3612**
			2645-32
		SE5410	**★3612**
			2645-33
	TI	**SN5410**	**★923**
			620-133
54100	**TI**	**SN54100**	**★955**
			625-71
54104	Fairchild	54104	617-22
	National	MM54104	3169-93
54105	Fairchild	54105	617-23
54107	Fairchild	54107	617-95
	Ferranti	ZN54107	617-99
	National	DM54107	617-107
	Signetics	**54107**	**★860**
			617-111
	TI	**SN54107**	**★957**
			617-115
54109	National	DM54109	617-44
	Signetics	**54109**	**★860**
			617-46
	TI	**SN54109**	**★958**
			617-48
5411	Fairchild	5411	618-175
	National	DM5411	618-178
	Panasonic	AN5411	3171-69
	Signetics	**5411**	**★860**
	SSS	SCL5411	590-16
54110	**TI**	**SN54110**	**★958**
			617-3
54111	**TI**	**SN54111**	**★959**
			617-153
54116	**Signetics**	**54116**	**★860**
			625-64
	TI	**SN54116**	**★960**
			625-68
54118	Ferranti	ZN54118	625-151

Base Number	Source	Device	Page-Line
54119	Ferranti	ZN54119	625-152
5412	Fairchild	5412	620-97
	Ferranti	ZN5412	620-99
	TI	**SN5412**	**★924**
			620-102
54120	**TI**	**SN54120**	**★961**
			637-106
54121	Fairchild	54121	630-95
	Ferranti	ZN54121	630-97
	National	DM54121	630-101
	Signetics	**54121**	**★528**
			★860
			630-103
	TI	**SN54121**	**★961**
			630-105
54122	Fairchild	54122	630-120
	Ferranti	ZN54122	630-122
	TI	**SN54422**	**★961**
			630-125
54123	Fairchild	54123	630-158
	Ferranti	ZN54123	630-160
	National	DM54123	630-164
	Signetics	**54123**	**★528**
			★861
			630-166
	TI	**SN54123**	**★962**
			630-168
54125	Fairchild	54125	605-161
	National	DM54125	605-164
	Signetics	**54125**	**★861**
			605-168
	TI	**SN54125**	**★963**
			605-170
54126	Fairchild	54126	605-137
	Signetics	**54126**	**★528**
			★861
			605-142
	TI	**SN54126**	**★963**
			605-144
54128	**Signetics**	**54128**	**★861**
			2671-25
	TI	**SN54128**	**★964**
			614-27
	TI	SN54128	2671-26
5413	Fairchild	5413	637-126
	Ferranti	ZN5413	637-128
	National	5413	637-132
	Signetics	**5413**	**★860**
			637-134
	TI	**SN5413**	**★924**
			637-136
54132	Fairchild	54132	638-17
	National	DM54132	638-21
	Signetics	**54132**	**★861**
			638-23
	TI	**SN54132**	**★965**
			638-25
54136	**TI**	**SN54136**	**★966**
			624-132
5414	Fairchild	5414	638-52
	National	DM5414	638-56
	Signetics	**5414**	**★860**
			638-58
	TI	**SN5414**	**★924**
			638-60
54141	Fairchild	54141	2662-86
	Motorola	MC54141	2662-89
	National	DM54141	2662-91
54143	**TI**	**SN54143**	**★970**
			611-156
54144	**TI**	**SN54144**	**★970**
			611-158
54145	Fairchild	54145	612-49
	National	DM54145	612-53
	Signetics	**54145**	**★861**
			612-55
	TI	**SN54145**	**★970**
			612-57
54147	National	DM54147	639-113
	Signetics	**54147**	**★861**
			639-115
	TI	**SN54147**	**★970**
			639-117
54148	National	DM54148	639-32
	Signetics	**54148**	**★861**
			639-36
			(Continued)

¶ Indicates page number in Application Note Directory.
★ Indicates addition data is provided on the page noted.

Base Number	Source	Device	Page-Line
54148	TI	SN54148	★ 971
			639-40
54150	Fairchild	54150	630-74
	Ferranti	ZN54150	630-76
	National	DM54150	630-80
	Signetics	54150	★ 861
			630-82
	TI	SN54150	★ 971
			630-84
54151	Fairchild	54151	629-145
	Ferranti	ZN54151	629-147
	National	DM54151A	629-151
	Signetics	54151	★ 528
			★ 861
			629-153
	TI	SN54151A	★ 972
			629-155
54152	Fairchild	54152	630-5
	TI	SN54152A	★ 972
			630-11
54153	Fairchild	54153	628-26
	Ferranti	ZN54153	628-28
	National	DM54153	628-34
	Signetics	54153	★ 528
			★ 861
			628-36
	TI	SN54153	★ 972
			628-38
54154	Fairchild	54154	613-105
	Ferranti	ZN54154	613-108
	National	DM54154	613-114
	Signetics	54154	★ 528
			★ 861
			613-118
	TI	SN54154	★ 973
			613-122
	TI	SN54154	2672-58
54155	Fairchild	54155	613-10
	Ferranti	ZN54155	613-12
	National	DM54155	613-16
	Signetics	54155	★ 861
	TI	SN54155	★ 974
			613-19
54156	Fairchild	54156	612-163
	National	DM54156	612-167
	Signetics	54156	★ 861
			612-169
	TI	SN54156	★ 974
			612-171
54157	Fairchild	54157	628-196
	Ferranti	ZN54157	629-1
	National	DM54157	629-6
	Signetics	54157	★ 528
			★ 861
			629-12
	TI	SN54157	★ 975
			629-16
54158	Signetics	54158	★ 861
			628-125
54159	TI	SN54159	★ 976
			613-130
5416	Fairchild	5416	614-58
	National	DM5416	614-62
	Signetics	5416	★ 860
			614-66
	TI	SN5416	★ 925
			614-68
54160	Fairchild	54160	610-21
	National	DM54160A	610-29
	Signetics	54160	★ 861
			610-33
	TI	SN54160	★ 977
			610-39
54161	Fairchild	54161	607-178
	Ferranti	ZN54161	607-182
	National	DM54161A	607-189
	Signetics	54161	★ 528
			★ 861
			608-1
	TI	SN54161	★ 977
			608-6
54162	Fairchild	54162	610-72
	National	DM54162A	610-76
	TI	SN54162	★ 978
			610-78
54163	Fairchild	54163	608-41
	Ferranti	ZN54163	608-43
	National	DM54163	608-47
	Signetics	54163	★ 528
			★ 861
			608-49
	TI	SN54163	★ 978
			608-51
54164	Fairchild	54164	632-20
			3790-81
	Ferranti	ZN54164	632-22
			3790-85
	National	DM54164	632-25
			3790-91
	Signetics	54164	★ 528
			★ 861
			632-29
			★ 528
			★ 861
			3790-97
	TI	SN54164	★ 979
			632-31
	TI	SN54164	3790-101
54165	Fairchild	54165	632-75
			3790-27
	Ferranti	ZN54165	632-77
	National	DM54165	632-80
			3790-30
	Signetics	54165	★ 861
			632-82
	Signetics	54165	3790-32
	TI	SN54165	★ 979
			632-84
	TI	SN54165	3790-34
54166	Fairchild	54166	632-95
			3790-36
	Ferranti	ZN54166	632-97
	National	DM54166	632-100
			3790-43
	Signetics	54166	★ 861
			632-102
	Signetics	54166	3790-45
	TI	SN54166	★ 979
			632-104
	TI	SN54166	3790-47
54167	Fairchild	54167	637-78
	TI	SN54167	★ 980
			637-81
5417	Fairchild	5417	614-37
	National	DM5417	614-41
	Signetics	5417	★ 860
			614-43
	TI	SN5417	★ 925
			614-45
54170	Fairchild	54170	627-5
			3770-23
		ZN54170	3770-27
	Ferranti	ZN54170	627-7
	National	DM54170	3770-31
	Signetics	54170	★ 861
			627-10
	TI	SN54170	★ 981
			627-12
	TI	SN54170	3770-38
54173	Fairchild	54173	615-121
	National	DM54173	615-124
	Signetics	54173	★ 861
			615-128
	TI	SN54173	★ 982
			615-132
54174	Fairchild	54174	615-145
	Ferranti	ZN54174	615-148
	National	DM54174	615-152
	Signetics	54174	★ 528
			★ 861
			615-154
	TI	SN54174	★ 983
			615-156
54175	Fairchild	54175	615-36
	Ferranti	ZN54175	615-38
	National	DM54175	615-42
	Signetics	54175	★ 528
			★ 861
			615-44
	TI	SN54175	★ 983
			615-46
54176	Fairchild	54176	609-169
	National	DM54176	609-178
	TI	SN54176	★ 984
			609-191
54177	Fairchild	54177	607-122
	National	DM54177	607-131
	TI	SN54177	★ 984
			607-144
54178	Fairchild	54178	631-111
			3788-63
	TI	SN54178	★ 984
			631-116
	TI	SN54178	3788-86
54179	Fairchild	54179	631-118
			3788-64
	TI	SN54179	★ 985
			631-126
	TI	SN54179	3788-87
54180	Fairchild	54180	639-65
	Ferranti	ZN54180	639-67
	National	DM54180	639-71
	Signetics	54180	★ 528
			★ 861
			639-75
	TI	SN54180	★ 985
			639-79
54181	Fairchild	54181	604-17
	Ferranti	ZN54181	604-20
	National	DM54181	604-22
	Signetics	54181	★ 861
			604-23
	TI	SN54181	★ 985
			604-25
54182	Fairchild	54182	604-73
	National	DM54182	604-78
	TI	SN54182	★ 986
			604-80
54184	Ferranti	ZN54184	637-99
	National	DM54184	637-101
	TI	SN54184	★ 987
			637-103
	TI	SN54184	3756-12
54185	National	DM54185A	637-93
	TI	SN54185A	★ 988
			637-96
	TI	SN54185A	3756-1
54188	TI	SN54188A	3760-48
5419	SSS	SCL5419	590-39
54190	Fairchild	54190	611-71
	National	DM54190	611-75
	Signetics	54190	★ 861
			611-77
	TI	SN54190	★ 989
			611-79
54191	Fairchild	54191	609-28
	Ferranti	ZN54191	609-30
	National	DM54191	609-34
	Signetics	54191	★ 861
			609-36
	TI	SN54191	★ 989
			609-38
54192	Fairchild	54192	611-31
	Ferranti	ZN54192	611-33
	National	DM54192	611-37
	Signetics	54192	★ 861
			611-41
	TI	SN54192	★ 990
			611-43
54193	Fairchild	54193	609-79
	Ferranti	ZN54193	609-81
	National	DM54193	609-85
	Signetics	54193	★ 528
			★ 861
			609-89
	TI	SN54193	★ 990
			609-91
54194	Fairchild	54194	631-148
			3788-65
	Ferranti	ZN54194	631-150
	National	DM54194	631-154
			3788-77
	Signetics	54194	★ 861
			631-156
	Signetics	54194	3788-81
	TI	SN54194	★ 990
			(Continued)
54194	TI	SN54194	631-158
	TI	SN54194	3788-88
54195	Fairchild	54195	631-41
			3788-100
	National	DM54195	631-49
			3788-127
	Signetics	54195	★ 861
			631-53
	TI	SN54195	★ 991
			631-56
	TI	SN54195	3789-8
54196	Fairchild	54196	609-170
	National	DM54196	609-179
	TI	SN54196	★ 991
			610-1
54197	Fairchild	54197	607-123
	National	DM54197	607-132
	TI	SN54197	★ 992
			607-145
54198	Fairchild	54198	632-56
			3789-109
	National	DM54198	632-59
			3789-115
	TI	SN54198	★ 992
			632-61
	TI	SN54198	3789-120
54199	Fairchild	54199	632-64
			3789-110
	National	DM54199	632-67
			3789-116
	Signetics	54199	★ 861
			632-69
	TI	SN54199	★ 993
			632-71
	TI	SN54199	3789-121
542	AD	AD542J	★3351
			3189-21
			¶ 294-14
		AD542K	★3351
			3187-57
			¶ 294-14
		AD542L	★3351
			3185-44
			¶ 294-14
		AD542S	★3351
			3187-56
			¶ 294-14
	Datel	AM-542MC	★2861
			3155-97
			3182-18
		AM-542MM	★2861
			3155-98
			3182-12
		AM-542MR	★2861
			3155-99
			3182-13
	HybridSys	ADC542B-8	2626-13
		ADC542C-8	2626-14
	Sanyo	STK542	3224-128
	Signetics	NE542	3165-172
5420	Fairchild	5420	620-36
	Ferranti	ZN5420	620-38
	LSILogic	LL5420	★4762
			4465-50
	National	DM5420	620-42
	Signetics	5420	★ 528
			★ 860
			620-45
	TI	SN5420	★ 926
			620-47
5421	Fairchild	5421	618-117
	Signetics	5421	★ 860
5422	Fairchild	5422	620-1
	TI	SN5422	★ 927
			620-4
54221	Signetics	54221	★ 861
			630-141
	TI	SN54221	★ 994
			630-143
54225	Signetics	54225	★ 861
5423	Fairchild	5423	623-144
	National	DM5423	623-148
	TI	SN5423	★ 927
			623-150
5424	TI	SN5424	★ 928
54240	National	MM54240	2685-18

Arranged alphanumerically from left to right.

Base Number	Source	Device	Page-Line
54246	TI	SN54246	★1001
			2662-28
54247	TI	SN54247	★1001
			2662-10
54248	TI	SN54248	★1002
			2661-135
54249	TI	SN54249	★1002
			2661-102
5425	Fairchild	5425	623-132
	Ferranti	ZN5425	623-134
	National	DM5425	623-138
		MM5425	3169-35
	Signetics	5425	★860
			623-140
	TI	SN5425	623-142
54251	National	DM54251	630-32
	TI	SN54251	★1003
			630-34
54259	National	DM54259	626-15
	TI	SN54259	★1005
			626-21
5426	Fairchild	5426	613-163
	National	DM5426	613-167
	Signetics	5426	★528
			★860
			614-1
	TI	SN5426	★928
			614-3
54265	TI	SN54265	★1007
			638-11
5427	Fairchild	5427	623-171
	Ferranti	ZN5427	623-173
	National	DM5427	623-177
	Signetics	5427	★860
			623-179
	TI	SN5427	★929
			623-181
54273	TI	SN54273	★1007
			616-63
54276	TI	SN54276	★1008
			618-112
54278	TI	SN54278	★1009
			638-135
54279	Fairchild	54279	625-130
	Signetics	54279	★862
			625-133
	TI	SN54279	★1009
			625-135
5428	Ferranti	ZN5428	624-43
	Signetics	5428	★860
			624-51
	TI	SN5428	★929
			624-55
54283	Fairchild	54283	605-66
	Ferranti	ZN54283A	605-70
	TI	SN54283	605-81
54284	National	DM54284	604-122
	TI	SN54284	★1011
			604-123
54285	TI	SN54285	★1011
			604-120
54290	TI	SN54290	★1012
			609-137
54293	Fairchild	54293	608-99
	TI	SN54293	★1014
			608-115
54298	Fairchild	54298	629-61
	Signetics	54298	★862
			629-64
	TI	SN54298	★1015
			629-66
543	Datel	AM-543MC	★2861
			3155-100
			3182-3
		AM-543MM	★2861
			3155-101
			3182-1
		AM-543MM	★2861
			3155-102
			3182-2
5430	Fairchild	5430	622-19
	Ferranti	ZN5430	622-21
	National	DM5430	622-25
		MM5430	3167-150
	Panasonic	AN5430	3171-70
	Signetics	5430	★860
			(Continued)

Base Number	Source	Device	Page-Line
5430	TI	SN5430	★929
			622-28
54301	SSS	SCL54301	3167-37
5431	National	MM5431	3167-151
	Panasonic	AN5431	3171-71
5432	Fairchild	5432	623-76
	Ferranti	ZN5432	623-78
	National	DM5432	623-81
	Signetics	5432	★528
			★860
			623-83
	TI	SN5432	★930
			623-85
5433	Signetics	5433	★860
			624-21
	TI	SN5433	★930
			624-23
5435	Panasonic	AN5435	3171-72
54365	National	DM54365	606-24
	Signetics	54365A	★528
			★862
			606-32
	TI	SN54365A	★1023
			606-36
54366	National	DM54366	606-166
			614-88
	Signetics	54366A	★528
			★862
			606-174
			614-92
	TI	SN54366A	★1023
			606-178
			614-96
54367	National	DM54367	606-25
			614-89
	Signetics	54367A	★528
			★862
			606-33
			614-93
	TI	SN54367A	★1024
			606-37
			614-97
54368	National	DM54368	606-167
	Signetics	54368A	★528
			★862
			606-175
	TI	SN54368A	★1024
			606-179
5437	Fairchild	5437	621-35
	Ferranti	ZN5437	621-37
	National	DM5437	621-41
		MM5437	3164-43
	Signetics	5437	★860
			621-45
	TI	SN5437	★932
			621-47
54376	TI	SN54376	★1027
			618-110
5438	Fairchild	5438	620-178
	Ferranti	ZN5438	620-181
	National	DM5438	620-185
	Signetics	5438	★860
			620-187
	TI	SN5438	★932
			620-191
5439	Signetics	5439	★860
			620-188
	TI	SN5439	★932
			620-192
54390	TI	SN54390	★1031
			610-123
54393	TI	SN54393	★1031
			608-82
544	AD	AD544J	★3351
			3189-29
			¶ 294-14
		AD544K	★3351
			3187-52
			¶ 294-14
		AD544L	★3351
			3185-39
			¶ 294-14
		AD544S	★3351
			3187-55
			¶ 294-14
	Intel	iSBC544	1963-16
			(Continued)

Base Number	Source	Device	Page-Line
544	Signetics	NE544	★3632
			3173-86
5440	Fairchild	5440	619-146
	Ferranti	ZN5440	619-148
	National	DM5440	619-152
	Signetics	5440	★860
			619-155
	TI	SN5440	★933
			619-157
5441	National	DM5441A	2662-82
5442	Fairchild	5442	612-66
	Ferranti	ZN5442	612-72
	National	DM5442	612-78
	Signetics	5442	★860
			612-86
	TI	SN5442A	★933
			612-90
54425	TI	SN54425	★1034
			605-171
54426	TI	SN54426	★1034
			605-145
5443	Fairchild	5443	612-12
	TI	SN5443A	★934
			612-16
5444	Fairchild	5444	612-6
	TI	SN5444A	★934
			612-9
5445	Fairchild	5445	612-39
	National	DM5445	612-43
		MM5445	2662-110
	Signetics	5445	★860
			612-45
	TI	SN5445	★934
			612-47
5446	Fairchild	5446	2662-20
	National	DM5446A	2662-26
			¶ 288-8
		MM5446	2662-111
	TI	SN5446A	★935
			2662-29
54468	Motorola	MC54468	636-109
5447	Fairchild	5447	2661-153
	National	DM5447A	2662-2
			¶ 288-8
		MM5447	2662-112
	TI	SN5447A	★935
			2662-11
5448	Fairchild	5448	2661-110
	National	DM5448	2661-127
		MM5448	2662-113
	TI	SN5448	★935
			2661-136
5449	Fairchild	5449	2661-86
	TI	SN5449	★935
			2661-103
54490	TI	SN54490	★1043
			610-124
545	AD	AD545J	★3351
			3187-38
		AD545K	★3351
			3187-37
		AD545L	★3351
			3194-16
		AD545M	★3351
			3184-38
5450	Fairchild	5450	622-95
	Ferranti	ZN5450	622-97
	National	DM5450	622-101
		MM5450	2662-108
	Signetics	5450	★860
			622-104
	TI	SN5450	★936
			622-106
5451	Fairchild	5451	622-114
	Ferranti	ZN5451	622-116
	National	DM5451	622-120
		MM5451	2662-109
	SGS	LS5451	622-143
	Signetics	5451	★860
			622-122
	TI	SN5451	622-124
5452	National	MM5452	2664-12
5453	Fairchild	5453	623-29
	Ferranti	ZN5453	623-31
	National	DM5453	623-35
		MM5453	2664-13
			(Continued)

Base Number	Source	Device	Page-Line
5453	TI	SN5453	★937
			623-37
5454	Fairchild	5454	623-18
	Ferranti	ZN5454	623-20
	National	DM5454	623-24
	TI	SN5454	★938
			623-26
5455	National	MM5455	3166-106
	SSS	SCL5455	3166-157
5456	National	MM5456	3166-107
5457	National	MM5457	3166-108
5458	SSS	SCL5458	3166-121
5460	Fairchild	5460	622-158
	National	DM5460	622-162
	Signetics	5460	622-164
	TI	SN5460	★940
			622-165
5462	National	MM5462	3166-109
5463	National	MM5463	3166-110
	SSS	SCL5463	3166-158
5464	National	MM5464	3166-111
5465	National	MM5465	3166-112
5466	National	MM5466	3166-113
547	AD	AD547J	★3350
			★3351
			3188-1
		AD547K	★3350
			★3351
			3185-37
		AD547L	★3350
			★3351
			3184-47
		AD547S	★3350
			★3351
			3185-38
5470	Fairchild	5470	616-182
	Ferranti	ZN5470	616-184
	National	DM5470	616-187
	TI	SN5470	★943
			617-1
5472	Fairchild	5472	617-5
	Ferranti	ZN5472	617-7
	National	DM5472	617-11
	TI	SN5472	★944
			617-13
5473	Fairchild	5473	617-96
	Ferranti	ZN5473	617-100
	National	DM5473	617-108
	Signetics	5473	★528
			★860
			617-112
	TI	SN5473	★944
			617-116
5474	Fairchild	5474	614-151
	Ferranti	ZN5474	614-153
	National	DM5474	614-157
		MM5474	2662-104
	Signetics	5474	★528
			★860
			614-159
	SSS	SCL5474	3166-159
	TI	SN5474	614-161
5475	Fairchild	5475	625-81
	Ferranti	ZN5475	625-83
	National	DM5475	625-87
	Signetics	5475	★860
			625-89
	TI	SN5475	★946
			625-91
5476	Fairchild	5476	617-155
	Ferranti	ZN5476	617-157
	National	DM5476	617-161
		MM5476	2662-105
	Signetics	5476	★528
			★860
			617-163
	TI	SN5476	★946
			617-165
5477	Fairchild	5477	625-115
	National	MM5477	2662-106
	TI	SN5477	★947
			625-117
5478	National	MM5478	2662-107
5480	Fairchild	5480	603-160
	TI	SN5480	★948
			603-162

¶ Indicates page number in Application Note Directory.
★ Indicates addition data is provided on the page noted.

Base Number	Source	Device	Page-Line
5481	TI	SN5481A	★ 948
			627-1
5482	Fairchild	5482	604-4
	Ferranti	ZN5482	604-6
	SSS	SCL5482	3167-38
	TI	SN5482	★ 948
			604-9
5483	Fairchild	5483	605-67
	Ferranti	ZN5483A	605-71
	National	DM5483	605-77
			¶ 250-7
		MM5483	2664-22
	Signetics	5483	★ 860
			605-79
	SSS	SCL5483	3167-39
	TI	SN5483A	★ 949
			605-82
5484	National	MM5484	2664-8
	TI	SN5484A	★ 949
5485	Fairchild	5485	603-41
	Ferranti	ZN5485	603-47
	National	DM5485	603-56
		MM5485	2663-146
	Signetics	5485	★ 528
			★ 860
			603-63
	TI	SN5485	★ 950
			603-68
		SN5485A	★ 950
			627-3
5486	Fairchild	5486	624-152
	Ferranti	ZN5486	624-154
	National	DM5486	624-160
		MM5486	2661-61
	Signetics	5486	★ 860
			624-165
	TI	SN5486	★ 950
			624-167
5489	AMD	AM5489	3771-21
		SN5489-1	3770-120
	Ferranti	ZN5489	627-56
5490	Fairchild	5490	609-124
	Ferranti	ZN5490A	609-127
	National	DM5490	609-133
	Signetics	5490	★ 860
			609-135
	TI	SN5490A	★ 952
			609-138
5491	Fairchild	5491	632-135
			3790-113
	Ferranti	ZN5491A	632-137
			3790-115
	Motorola	MC5491A	3790-117
	National	DM5491A	632-141
		SN5491A	3790-119
	Signetics	5491	★ 860
			632-143
	Signetics	5491	3790-121
	TI	SN5491A	★ 952
			632-145
	TI	SN5491A	3790-123
5492	Fairchild	5492	611-110
	Ferranti	ZN5492A	611-112
	National	DM5492A	611-116
	RIFA	SN5492A	611-118
	Signetics	5492	★ 860
			611-119
	TI	SN5492A	★ 952
			611-121
5493	Fairchild	5493	608-100
	Ferranti	ZN5493A	608-105
	National	DM5493A	608-111
	Signetics	5493	★ 528
			★ 860
			608-113
	TI	SN5493A	★ 953
			608-116
5494	Fairchild	5494	631-141
			3789-57
	Ferranti	ZN5494	3789-59
	Signetics	5494	★ 860
			3789-62
	TI	SN5494	★ 953
			631-146
	TI	SN5494	3789-64
5495	Fairchild	5495	631-81
			3788-66
	Ferranti	ZN5495A	631-83
			3788-71
	National	DM5495	631-89
			3788-78
	Signetics	5495A	★ 860
			631-91
	Signetics	5495A	3788-82
	TI	SN5495A	★ 954
			631-93
	TI	SN5495A	3788-89
5496	Fairchild	5496	631-187
			3789-80
	Ferranti	ZN5496	631-189
			3789-82
	National	DM5496	632-4
			3789-86
	Signetics	5496	★ 528
			★ 860
			632-6
			★ 528
			★ 860
			3789-88
	TI	SN5496	★ 954
			632-8
	TI	SN5496	3789-92
5497	Fairchild	5497	638-156
	TI	SN5497	★ 954
			638-159
54A500	TI	SN54A500	★ 920
54ALS00			
	Motorola	SN54ALS00	621-163
	National	DM54ALS00	621-165
	TI	SN54ALS00	621-167
	TI	SN54ALS00A	★ 920
54ALS01			
	Motorola	SN54ALS01	621-100
	TI	SN54ALS01	★ 920
			621-104
54ALS02			
	Motorola	SN54ALS02	624-58
	National	DM54ALS02	624-62
	TI	SN54ALS02	★ 920
			624-64
54ALS03			
	Motorola	SN54ALS03	621-101
	TI	SN54ALS03	★ 921
			621-105
54ALS04			
	Motorola	SN54ALS04	607-57
	National	DM54ALS04	607-59
	TI	SN54ALS04	★ 921
			607-61
54ALS05			
	Motorola	SN54ALS05	606-130
	TI	SN54ALS05	★ 921
			606-132
54ALS08			
	Motorola	SN54ALS08	619-92
	National	DM54ALS08	619-96
	TI	SN54ALS08	★ 921
			619-100
54ALS09			
	Motorola	SN54ALS09	619-53
	TI	SN54ALS09	★ 923
			619-55
54ALS10			
	Motorola	SN54ALS10	620-136
	TI	SN54ALS10	★ 923
			620-138
54ALS1000			
	TI	SN54ALS1000	★ 1114
			621-168
54ALS1002			
	TI	SN54ALS1002	★ 1114
			624-65
54ALS1003			
	TI	SN54ALS1003	★ 1115
			621-106
54ALS1004			
	TI	SN54ALS1004	★ 1115
			607-62
54ALS1005			
	TI	SN54ALS1005	★ 1115
			606-133
54ALS1008			
	TI	SN54ALS1008	★ 1116
			619-101
54ALS1010			
	TI	SN54ALS1010	★ 1116
			620-139
54ALS1011			
	TI	SN54ALS1011	★ 1116
			619-2
54ALS1020			
	TI	SN54ALS1020	★ 1117
			620-52
54ALS1032			
	TI	SN54ALS1032	★ 1117
			623-91
54ALS1034			
	TI	SN54ALS1034	★ 1118
			606-40
54ALS1035			
	TI	SN54ALS1035	★ 1118
			606-22
54ALS109			
	Motorola	SN54ALS109	★ 823
			617-51
	National	DM54ALS109	617-53
	TI	SN54ALS109	★ 958
			617-55
54ALS11			
	Motorola	SN54ALS11	618-181
	TI	SN54ALS11	★ 923
			619-3
54ALS112			
	TI	SN54ALS112	★ 959
			618-43
54ALS113			
	National	DM54ALS113	618-3
	TI	SN54ALS113	★ 959
			618-4
		SN54ALS113A	★ 959
54ALS114			
	TI	SN54ALS114	★ 960
			618-80
54ALS12			
	Motorola	SN54ALS12	★ 822
			620-104
	TI	SN54ALS12	★ 924
			620-106
54ALS1240			
	TI	SN54ALS1240	★ 1119
			633-150
54ALS1241			
	TI	SN54ALS1241	★ 1119
			634-20
54ALS1242			
	TI	SN54ALS1242	★ 1119
			633-73
54ALS1243			
	TI	SN54ALS1243	★ 1120
			633-74
54ALS1244			
	TI	SN54ALS1244	★ 1120
			634-21
54ALS1245			
	TI	SN54ALS1245	★ 1120
			635-77
54ALS13			
	Motorola	SN54ALS13	★ 822
			637-138
54ALS131			
	TI	SN54ALS131	★ 964
			613-101
54ALS132			
	Motorola	SN54ALS132	★ 823
			638-27
54ALS133			
	TI	SN54ALS133	★ 965
			622-71
54ALS137			
	TI	SN54ALS137	★ 967
			613-90
54ALS138			
	Motorola	SN54ALS138	★ 823
			613-41
	TI	SN54ALS138	★ 968
			613-45
54ALS139			
	Motorola	SN54ALS139	★ 823
			612-124
			(Continued)
54ALS139			
	TI	SN54ALS139	★ 968
			612-126
54ALS14			
	Motorola	SN54ALS14	★ 822
			638-62
54ALS15			
	Motorola	SN54ALS15	★ 822
			618-148
	TI	SN54ALS15	★ 925
			618-150
54ALS151			
	Motorola	SN54ALS151	★ 823
			629-157
	TI	SN54ALS151	★ 972
			629-159
54ALS153			
	Motorola	SN54ALS153	★ 823
			628-40
	TI	SN54ALS153	★ 972
			628-42
54ALS157			
	Motorola	SN54ALS157	★ 823
			629-18
	TI	SN54ALS157	★ 975
			629-20
54ALS158			
	Motorola	SN54ALS158	★ 823
			628-127
	TI	SN54ALS158	★ 975
			628-129
54ALS160			
	Motorola	SN54ALS160	★ 823
			610-40
	National	DM54ALS160	610-42
	TI	SN54ALS160	★ 977
			610-44
54ALS161			
	Motorola	SN54ALS161	★ 823
			608-8
	National	DM54ALS161	608-10
	TI	SN54ALS161	★ 977
			608-12
54ALS1616			
	TI	SN54ALS1616	★ 1121
			605-27
54ALS162			
	Motorola	SN54ALS162	★ 823
			610-80
	National	DM54ALS162	610-86
	TI	SN54ALS162	★ 978
			610-92
54ALS1620			
	TI	SN54ALS1620	★ 1122
			636-62
54ALS1621			
	TI	SN54ALS1621	★ 1122
			636-30
54ALS1622			
	TI	SN54ALS1622	★ 1122
			636-31
54ALS1623			
	TI	SN54ALS1623	★ 1122
			636-63
54ALS163			
	Motorola	SN54ALS163	★ 823
			608-53
	National	DM54ALS163	608-55
	TI	SN54ALS163	★ 978
			608-57
54ALS1638			
	TI	SN54ALS1638	★ 1123
			634-125
54ALS1639			
	TI	SN54ALS1639	★ 1123
			634-126
54ALS164			
	Motorola	SN54ALS164	★ 823
			632-33
	TI	SN54ALS164	★ 979
			632-35
54ALS1640			
	TI	SN54ALS1640	★ 1124
			634-165
54ALS1641			
	TI	SN54ALS1641	★ 1124
			635-53

Arranged alphanumerically from left to right.

© IC MASTER 1984

Base Number	Source	Device	Page-Line
54ALS1642			
	TI	SN54ALS1642 ★	1124
			634-143
54ALS1643			
	TI	SN54ALS1643 ★	1124
			634-166
54ALS1644			
	TI	SN54ALS1644 ★	1124
			635-138
54ALS1645			
	TI	SN54ALS1645 ★	1124
			635-78
	TI	SN54ALS1645	2677-35
54ALS165			
	TI	SN54ALS165 ★	979
			632-86
54ALS1652			
	TI	SN54ALS1652 ★	1125
54ALS166			
	TI	SN54ALS166 ★	979
			632-106
54ALS168			
	Motorola	SN54ALS168 ★	823
			610-185
	TI	SN54ALS168 ★	980
			610-187
54ALS169			
	Motorola	SN54ALS169 ★	823
			608-181
	TI	SN54ALS169 ★	980
			608-183
54ALS16R4			
	TI	SN54ALS16R4-1	
			4480-87
54ALS174			
	Motorola	MC54ALS174	615-158
	TI	SN54ALS174 ★	983
			615-160
54ALS175			
	TI	SN54ALS175 ★	983
			615-48
54ALS190			
	Motorola	SN54ALS190 ★	823
			611-81
	TI	SN54ALS190 ★	989
			611-83
54ALS191			
	Motorola	SN54ALS191 ★	823
			609-40
	TI	SN54ALS191 ★	989
			609-49
54ALS192			
	Motorola	SN54ALS192 ★	823
			611-45
	TI	SN54ALS192 ★	990
			611-47
54ALS193			
	Motorola	SN54ALS193 ★	823
			609-93
	TI	SN54ALS193 ★	990
			609-95
54ALS194			
	TI	SN54ALS194 ★	990
			631-160
54ALS20			
	Motorola	SN54ALS20 ★	822
			620-50
	TI	SN54ALS20 ★	926
			620-53
54ALS21			
	Motorola	SN54ALS21 ★	822
			618-121
	TI	SN54ALS21 ★	927
			618-123
54ALS22			
	Motorola	SN54ALS22 ★	822
			620-6
	TI	SN54ALS22 ★	927
			620-8
54ALS238			
	Motorola	SN54ALS238 ★	823
			613-80
54ALS239			
	Motorola	SN54ALS239 ★	823
			612-161
54ALS240			
	Motorola	SN54ALS240 ★	823
			633-142
	National	DM54ALS240	633-146
	TI	SN54ALS240 ★	998
			633-151
	TI	SN54ALS240	2670-6
54ALS241			
	Motorola	SN54ALS241 ★	823
			634-13
	National	DM54ALS241	634-17
	TI	SN54ALS241 ★	999
			634-22
	TI	SN54ALS241	2669-39
54ALS242			
	Motorola	SN54ALS242 ★	823
			633-65
	National	DM54ALS242	633-69
	TI	SN54ALS242 ★	999
			633-75
	TI	SN54ALS242	2675-28
54ALS243			
	Motorola	SN54ALS243 ★	823
			633-66
	National	DM54ALS243	633-70
	TI	SN54ALS243 ★	1000
			633-76
	TI	SN54ALS243	2675-29
54ALS244			
	Motorola	SN54ALS244 ★	823
			634-72
	National	DM54ALS244	634-74
	TI	SN54ALS244 ★	1000
			634-75
	TI	SN54ALS244	2669-40
54ALS245			
	Motorola	SN54ALS245 ★	823
			635-69
	National	DM54ALS245	635-75
	TI	SN54ALS245 ★	1001
			635-79
	TI	SN54ALS245	2677-36
54ALS251			
	Motorola	SN54ALS251 ★	823
			630-36
	TI	SN54ALS251 ★	1003
			630-38
54ALS253			
	Motorola	SN54ALS253 ★	823
			627-165
	TI	SN54ALS253 ★	1003
			627-167
54ALS257			
	Motorola	SN54ALS257 ★	823
			628-163
	TI	SN54ALS257 ★	1004
			628-165
54ALS258			
	Motorola	SN54ALS258 ★	823
			628-88
	TI	SN54ALS258 ★	1005
			628-90
54ALS259			
	TI	SN54ALS259 ★	1005
			626-23
54ALS260			
	TI	SN54ALS260	623-153
54ALS27			
	Motorola	SN54ALS27 ★	822
			623-183
	TI	SN54ALS27 ★	929
			624-2
54ALS273			
	Motorola	SN54ALS273 ★	823
			616-65
	National	DM54ALS273	616-67
	TI	SN54ALS273 ★	1007
			616-69
54ALS28			
	Motorola	SN54ALS28 ★	822
			624-59
	TI	SN54ALS28 ★	929
			624-66
54ALS299			
	TI	SN54ALS299 ★	1016
			632-161
54ALS30			
	TI	SN54ALS30 ★	929
			622-30
54ALS32			
	Motorola	SN54ALS32 ★	822
			623-87
	National	DM54ALS32	623-89
	TI	SN54ALS32 ★	930
			623-92
54ALS323			
	TI	SN54ALS323 ★	1018
			632-162
54ALS33			
	Motorola	SN54ALS33 ★	822
			624-25
	TI	SN54ALS33 ★	930
			624-27
54ALS34			
	TI	SN54ALS34 ★	931
			606-16
54ALS35			
	TI	SN54ALS35 ★	931
			606-20
54ALS352			
	Motorola	SN54ALS352 ★	823
			627-139
	TI	SN54ALS352 ★	1020
			627-141
54ALS353			
	Motorola	SN54ALS353 ★	823
			627-105
	TI	SN54ALS353 ★	1021
			627-107
54ALS365			
	TI	SN54ALS365 ★	1023
			606-41
54ALS366			
	TI	SN54ALS366 ★	1023
			614-99
54ALS367			
	TI	SN54ALS367 ★	1024
			606-42
54ALS368			
	TI	SN54ALS368 ★	1024
			607-1
54ALS37			
	Motorola	SN54ALS37 ★	823
			621-49
	TI	SN54ALS37 ★	932
			621-51
54ALS373			
	Motorola	SN54ALS373 ★	823
			626-40
	National	DM54ALS373	626-44
	TI	SN54ALS373 ★	1025
			626-48
54ALS374			
	Motorola	SN54ALS374 ★	823
			616-89
	National	DM54ALS374	616-97
	TI	SN54ALS374 ★	1026
			616-101
54ALS377			
	Motorola	SN54ALS377 ★	823
			616-149
	National	DM54ALS377	616-151
54ALS38			
	Motorola	SN54ALS38 ★	823
			620-195
	TI	SN54ALS38 ★	932
			620-197
54ALS40			
	Motorola	SN54ALS40 ★	823
			619-159
	TI	SN54ALS40 ★	933
			619-161
54ALS465			
	TI	SN54ALS465 ★	1040
			606-95
54ALS466			
	TI	SN54ALS466 ★	1040
			607-108
54ALS467			
	TI	SN54ALS467 ★	1040
			606-96
54ALS468			
	TI	SN54ALS468 ★	1040
			607-109
54ALS474			
	TI	SN54ALS474	1345-92
54ALS51			
	Motorola	SN54ALS51 ★	823
			622-127
54ALS518			
	TI	SN54ALS518 ★	1044
			603-104
54ALS519			
	TI	SN54ALS519 ★	1044
			603-105
54ALS520			
	TI	SN54ALS520 ★	1044
			603-88
54ALS521			
	TI	SN54ALS521 ★	1044
			603-89
54ALS522			
	TI	SN54ALS522 ★	1044
			603-90
54ALS526			
	TI	SN54ALS526 ★	1045
			4482-53
	TI	SN54ALS526	603-151
			636-88
54ALS527			
	TI	SN54ALS527 ★	1045
			4482-55
	TI	SN54ALS527	603-102
54ALS528			
	TI	SN54ALS528 ★	1046
			4482-51
	TI	SN54ALS528	603-149
54ALS533			
	Motorola	SN54ALS533 ★	823
			626-102
	TI	SN54ALS533 ★	1047
			626-110
54ALS534			
	Motorola	SN54ALS534 ★	823
			616-34
	TI	SN54ALS534 ★	1047
			616-38
54ALS537			
	Motorola	SN54ALS537 ★	823
			612-108
54ALS538			
	Motorola	SN54ALS538 ★	823
			613-42
	TI	SN54ALS538 ★	1048
			613-46
54ALS539			
	Motorola	SN54ALS539 ★	823
			612-120
	TI	SN54ALS539 ★	1049
			612-122
54ALS54			
	Motorola	SN54ALS54	623-3
54ALS540			
	Motorola	SN54ALS540 ★	823
			633-143
	TI	SN54ALS540 ★	1050
			633-148
	TI	SN54ALS540	2670-7
54ALS541			
	Motorola	SN54ALS541 ★	823
			634-14
	TI	SN54ALS541 ★	1050
			634-23
	TI	SN54ALS541	2669-41
54ALS55			
	Motorola	MC54ALS55	622-168
	Motorola	SN54ALS55 ★	823
54ALS560			
	Motorola	SN54ALS560 ★	823
			610-154
	TI	SN54ALS560 ★	1051
			610-156
54ALS561			
	Motorola	SN54ALS561 ★	823
			608-149
	TI	SN54ALS561 ★	1051
			608-151

¶ Indicates page number in Application Note Directory.
★ Indicates addition data is provided on the page noted.

IC MASTER

INTERNATIONAL DISTRIBUTORS

ARGENTINA, COLUMBIA, ECUADOR, VENEZUELA, MEXICO, PERU
Intectra
2629 Terminal Blvd.
Mt. View, CA 94043
Tel. (415) 967-8818

AUSTRALIA
A J Distributors Pty Ltd.
P.O. Box 71
Prospect, S. Australia 5082
Tel. 269-1244
Telex (790) 82635

AUSTRIA
Becos Electronic Ges. M.G.H.
Gablenzgasse 52
A-1160 Vienna, Austria
Tel. 0222/959145
Telex (847) 134606

BELGIUM
J. P. LeMaire S.A.
Limberg, Stirum 243
1810 Wemmel, Belgium
Tel. 02/4784847
Telex (846) 24610

BRAZIL
Filcres Importacao
Rua Aurora
CEP 01209
Caixa Postal 18767
Sao Paulo, Brazil
Tel. (011) 223 7388
Telex (391) 113298

CANADA
Future Electronics
237 Hymus Blvd.
Pointe Claire
Quebec H9R 5C7
Canada
Tel. 514-694-7710
TWX: 610-421-3251
Telex 05-823554

DENMARK
Advanced Electronik
55, Mariendalsvej
DK2000, Copenhagen F, Denmark
Tel. 01 194433
Telex (855) 22431

ENGLAND
Paterson/Steadman & Partner Ltd.
The Hub
Emson Close
Saffron Walden, Essex
CB10 1HL, England
Tel. 27067
Telex (851) 81653

J. B. Tratsart Ltd.
Dogmersfield Nr.
Baskingstroke
Hampshire RG27 8SU, England
Tel. 02514 3334
Telex (851) 916196

FINLAND
ITT Multikomponent
Tyopajakatu 5
PL107,00501
Helsinki 50, Finland
Tel. 739100
Telex (857) 121450

FRANCE
Conseilet Promotion
28 Rue de la Procession
92150 Suresnes, France
Tel. 5064275
Telex (842) 614596F

HOLLAND
Manudax-Nederland B.V.
54732G Heeswijk (N.B.)
Meerstraat 7, Holland
Tel. 04139 2901
Telex (844) 50175

HONG KONG
Conmos Products, Ltd.
Haynein Bldg., 11th Floor
1 Tai Yip Street
Keun Tong, Kowloon, Hong Kong
Tel. 3-684572
Telex (780) 85448

INDIA, MALAYSIA, SINGAPORE, THAILAND
Radio & Craft Publications
4794/23 Bharat Ram Road
Daryanganj, New Delhi 2, India
Tel. 277147

ISRAEL
STG International Ltd.
10 Humberman Street
P. O. Box 1276
61012 Tel Aviv, Israel
Tel. 248231
Telex (922) 342229

ITALY
Gruppo Editoriale Jackson S.R.L.
Via Rosellini 12
20124 Milan, Italy
Tel. 68 80951
Telex (843) 315366

JAPAN
Asahi Glass Company, Ltd. Electronic Components Group
1-2 Marunouchi 2-chome
Chiyoda-ku, Tokyo 100, Japan
Tel. (03) 218-5813
Telex (781) TK4616

Overseas Data Service Co. Ltd.
Shugetsu Building No. 12-7
Kita-Aoyama 3-chome
Minato-ku, Tokyo 107, Japan
Tel. (03) 400-7090
Telex (781) J26487

Tokyo International Communications Inc.
Miyajima Bldg.
28 Yoyogi 1-chome,
Shibuya-ku
Tokyo 151, Japan
Tel. 379-2561
Telex (781) 33106

NORWAY
Fagbokservice A.S.
Ekebergn, 130B
Box 94
Bekkelagshogda, Oslo 2, Norway
Tel. (02) 282237

SOUTH AFRICA
Suntronika
Dargene House,
10 Station Street
Braamfontein, Johannesburg
South Africa
Tel. 725-1210
Telex (960) 4-24143

SPAIN
Sagitron
Castello 25, 2, °
Madrid 1, Spain
Tel. 402 6085
Telex (831) 43819

SWEDEN
Fertronic AB
Snormakarvagen 35
Box 56,
16126 Bromma, Sweden
Tel. 08/252610
Telex (854) 11181

SWITZERLAND
W. Stolz AG
Taefernstrasse 15
CH-5404 Baden-Daettwil
Switzerland
Tel. 056 840151
Telex (845) 54070Z

TAIWAN
Helm Engineering & Trading Co.
49 No. 143 Section 4
Hsin Yi Rd.
Taipei, Taiwan, ROC
Tel. 709-1888
Telex (785) 28204

TURKEY
EMPA Elektronik (Mamulleri Pazarlama AS)
Tersane Cad. Kuthan 38/408
Tr-Kara Koy — Istanbul, Turkey
Tel. (11) 496249
Telex 24429

WEST GERMANY
Astronic GmbH
Winzererstrasse 47d
8000 Munich 40, West Germany
Tel. (089) 309031
Telex (841) 5216187

Hearst
HEARST BUSINESS COMMUNICATIONS, INC./UTP DIVISION
645 Stewart Avenue, Garden City, NY 11530 (516) 222-2500 TWX: 510-222-1673

Don't Miss the
IC Updates

These quarterly updates keep your IC Master current the year 'round.

Look for them in Integrated Circuits Magazine

Base Number	Source	Device	Page-Line
54ALS563			
	Motorola	**SN54ALS563** ★	**823**
			626-103
	TI	**SN54ALS563** ★	**1052**
			626-111
54ALS564			
	Motorola	**SN54ALS564** ★	**823**
			616-35
	TI	**SN54ALS564** ★	**1052**
			616-39
54ALS568			
	Motorola	**SN54ALS568** ★	**823**
			610-175
	TI	**SN54ALS568** ★	**1053**
			610-177
54ALS569			
	Motorola	MC54ALS569	609-70
	Motorola	**SN54ALS569** ★	**823**
			608-169
	TI	**SN54ALS569** ★	**1053**
			609-72
54ALS573			
	Motorola	**SN54ALS573** ★	**823**
			626-41
	National	DM54ALS573	626-45
	TI	**SN54ALS573** ★	**1054**
			626-49
54ALS574			
	Motorola	**SN54ALS574** ★	**823**
			616-90
	National	DM54ALS574	616-98
	TI	**SN54ALS574** ★	**1054**
			616-102
54ALS575			
	Motorola	**SN54ALS575** ★	**823**
			616-91
	TI	**SN54ALS575** ★	**1054**
			616-103
54ALS576			
	Motorola	**SN54ALS576** ★	**823**
			619-93
	National	DM54ALS576	619-97
	TI	**SN54ALS576** ★	**1055**
			616-40
54ALS577			
	Motorola	**SN54ALS577** ★	**823**
			616-92
	TI	**SN54ALS577** ★	**1055**
			616-104
54ALS580			
	Motorola	**SN54ALS580** ★	**823**
			626-104
	National	DM54ALS580	626-108
	TI	**SN54ALS580** ★	**1056**
			626-112
54ALS620			
	Motorola	**SN54ALS620** ★	**823**
			636-52
	National	DM54ALS620	636-56
	TI	**SN54ALS620** ★	**1066**
			636-64
54ALS621			
	Motorola	**SN54ALS621** ★	**823**
			636-28
	TI	**SN54ALS621** ★	**1066**
			636-32
54ALS622			
	Motorola	**SN54ALS622** ★	**823**
			636-26
	National	DM54ALS622	636-57
	TI	**SN54ALS622** ★	**1066**
			636-33
54ALS623			
	Motorola	**SN54ALS623** ★	**823**
			636-53
	National	DM54ALS623	636-58
	TI	**SN54ALS623** ★	**1066**
			636-65
54ALS632			
	National	MM54ALS632	2665-35
	TI	**SN54ALS632** ★	**1070**
		★	**374**
			639-140
		¶	264-8
		★	**1070**
		★	**374**
			2665-47
54ALS633			
	National	MM54ALS633	2665-36
	TI	**SN54ALS633** ★	**374**
		★	**1070**
			639-141
		¶	264-8
		★	**374**
		★	**1070**
			2665-48
54ALS634			
	National	MM54ALS634	2665-37
	TI	**SN54ALS634** ★	**374**
		★	**1071**
			639-142
		¶	264-8
		★	**374**
		★	**1071**
			2665-49
54ALS635			
	National	MM54ALS635	2665-38
	TI	**SN54ALS635** ★	**374**
		★	**1071**
			639-135
		¶	264-8
		★	**374**
		★	**1071**
			2665-50
54ALS636			
	TI	SN54ALS636	639-1
54ALS637			
	TI	SN54ALS637	639-2
54ALS638			
	Motorola	**SN54ALS638** ★	**823**
			634-121
	TI	**SN54ALS638** ★	**1073**
			634-127
54ALS639			
	Motorola	**SN54ALS639** ★	**823**
			634-122
	TI	**SN54ALS639** ★	**1073**
			634-128
54ALS640			
	Motorola	**SN54ALS640** ★	**823**
			634-158
	TI	**SN54ALS640** ★	**1074**
			634-167
54ALS641			
	Motorola	**SN54ALS641** ★	**823**
			635-49
	National	DM54ALS641	635-51
	TI	**SN54ALS641** ★	**1074**
			635-54
54ALS642			
	Motorola	**SN54ALS642** ★	**823**
			634-139
	National	DM54ALS642	634-141
	TI	**SN54ALS642** ★	**1074**
			634-144
54ALS643			
	Motorola	**SN54ALS643** ★	**823**
			634-159
	National	DM54ALS643	634-162
	TI	**SN54ALS643** ★	**1074**
			634-168
54ALS644			
	Motorola	**SN54ALS644** ★	**823**
			635-134
	National	DM54ALS644	635-136
	TI	**SN54ALS644** ★	**1074**
			635-139
54ALS645			
	TI	**SN54ALS645** ★	**1074**
			635-80
	TI	SN54ALS645	2677-37
54ALS646			
	Motorola	**SN54ALS646** ★	**823**
			636-113
	National	DM54ALS646	636-117
	TI	**SN54ALS646** ★	**1076**
			635-184
54ALS647			
	Motorola	**SN54ALS647** ★	**823**
			635-166
	National	DM54ALS647	635-170
	TI	**SN54ALS647** ★	**1076**
			635-178
54ALS648			
	Motorola	**SN54ALS648** ★	**823**
			636-114
	National	DM54ALS648	636-118
	TI	**SN54ALS648** ★	**1076**
			635-185
54ALS649			
	Motorola	**SN54ALS649** ★	**823**
			635-167
	National	DM54ALS649	635-171
	TI	**SN54ALS649** ★	**1076**
			635-179
54ALS651			
	Motorola	**SN54ALS651** ★	**823**
			635-70
	TI	**SN54ALS651** ★	**1078**
			635-81
			635-186
54ALS652			
	Motorola	**SN54ALS652** ★	**823**
			635-71
	TI	**SN54ALS652** ★	**1078**
			635-82
			635-187
54ALS653			
	Motorola	MC54ALS653	635-152
	Motorola	**SN54ALS653** ★	**823**
	TI	**SN54ALS653** ★	**1079**
			635-154
54ALS654			
	Motorola	MC54ALS654	635-159
	Motorola	**SN54ALS654** ★	**823**
	TI	**SN54ALS654** ★	**1079**
			635-161
54ALS671			
	Motorola	**SN54ALS671** ★	**823**
			631-22
54ALS672			
	Motorola	**SN54ALS672** ★	**823**
			631-23
54ALS677			
	TI	**SN54ALS677** ★	**1083**
			603-23
54ALS678			
	TI	**SN54ALS678** ★	**1083**
			603-24
54ALS679			
	TI	**SN54ALS679** ★	**1084**
			603-25
54ALS680			
	TI	**SN54ALS680** ★	**1084**
			603-26
54ALS688			
	TI	**SN54ALS688** ★	**1088**
			603-126
54ALS689			
	TI	**SN54ALS689** ★	**1088**
			603-106
54ALS690			
	Motorola	**SN54ALS690** ★	**823**
			610-81
	National	DM54ALS690	610-87
54ALS691			
	Motorola	**SN54ALS691** ★	**823**
			607-164
	National	DM54ALS691	607-168
54ALS692			
	Motorola	**SN54ALS692** ★	**823**
			610-82
	National	DM54ALS692	610-88
54ALS693			
	Motorola	**SN54ALS693** ★	**823**
			607-165
	National	DM54ALS693	607-169
54ALS694			
	Motorola	**SN54ALS694** ★	**823**
			611-160
54ALS695			
	Motorola	**SN54ALS695** ★	**823**
			611-161
54ALS696			
	Motorola	**SN54ALS696** ★	**823**
			610-161
	National	DM54ALS696	610-165
54ALS697			
	Motorola	**SN54ALS697** ★	**823**
			609-41
	National	DM54ALS697	609-45
54ALS698			
	Motorola	**SN54ALS698** ★	**823**
			610-162
	National	DM54ALS698	610-166
54ALS699			
	Motorola	**SN54ALS699** ★	**823**
			608-163
	National	DM54ALS699	609-46
54ALS74			
	Motorola	**SN54ALS74** ★	**823**
			614-164
	National	DM54ALS74	614-166
	TI	**SN54ALS74** ★	**945**
			614-168
54ALS790			
	Motorola	**SN54ALS790** ★	**823**
			637-2
54ALS8003			
	TI	**SN54ALS8003** ★	**1126**
			619-144
54ALS804			
	TI	**SN54ALS804** ★	**1094**
			614-108
54ALS805			
	TI	**SN54ALS805** ★	**1095**
			614-112
54ALS808			
	TI	**SN54ALS808** ★	**1095**
			614-104
54ALS832			
	TI	**SN54ALS832** ★	**1098**
			614-116
			623-128
54ALS857			
	TI	**SN54ALS857** ★	**1102**
			633-134
54ALS86			
	TI	**SN54ALS86** ★	**951**
			624-169
54ALS873			
	Motorola	**SN54ALS873** ★	**823**
			625-73
	National	DM54ALS873	625-75
	TI	**SN54ALS873** ★	**1106**
			625-77
54ALS874			
	Motorola	**SN54ALS874** ★	**823**
			614-124
	TI	**SN54ALS874** ★	**1106**
			614-131
54ALS876			
	Motorola	**SN54ALS876** ★	**823**
			614-125
	National	DM54ALS876	614-128
	TI	**SN54ALS876** ★	**1107**
			614-132
54ALS878			
	Motorola	MC54ALS878	614-120
	Motorola	**SN54ALS878** ★	**823**
	TI	**SN54ALS878** ★	**1108**
			614-133
54ALS879			
	Motorola	MC54ALS879	614-121
	Motorola	**SN54ALS879** ★	**823**
	TI	**SN54ALS879** ★	**1108**
			614-134
54ALS880			
	Motorola	**SN54ALS880** ★	**823**
			625-155
	National	DM54ALS880	625-157
	TI	**SN54ALS880** ★	**1109**
			625-159
54ALS91			
	Motorola	**SN54ALS91** ★	**823**
			632-147
54AS00	TI	**SN54AS00** ★	**920**
			621-171
54AS02	TI	**SN54AS02** ★	**920**
			624-70
54AS04	TI	**SN54AS04** ★	**921**
			607-65
54AS08	TI	**SN54AS08** ★	**922**
			619-104

Arranged alphanumerically from left to right.

© IC MASTER 1984

Base Number	Source	Device	Page-Line
54AS10	TI	SN54AS10	★ 923 620-142
54AS1000	TI	SN54AS1000	★ 1114 621-172
54AS1002	TI	SN54AS1002	★ 1114 624-71
54AS1004	TI	SN54AS1004	★ 1115 607-66
54AS1008	TI	SN54AS1008	★ 1116 619-105
54AS1032	TI	SN54AS1032	★ 1117 623-95
54AS1034	TI	SN54AS1034	★ 1118 606-14 606-46
54AS1036	TI	SN54AS1036	★ 1118 614-16 624-72
54AS109	TI	SN54AS109	★ 958 617-57
54AS11	TI	SN54AS11	★ 923 619-6
54AS112	TI	SN54AS112	★ 959 618-45
54AS113	TI	SN54AS113	★ 959 618-6
54AS114	TI	SN54AS114	★ 960 618-82
54AS1242	TI	SN54AS1242	633-81
54AS1243	TI	SN54AS1243	633-82
54AS131	TI	SN54AS131	★ 964 613-103
54AS137	TI	SN54AS137	★ 967 613-92
54AS138	TI	SN54AS138	★ 968 613-49
54AS139	TI	SN54AS139	★ 968 612-127
54AS150	TI	SN54AS150	★ 971 630-86
54AS151	TI	SN54AS151	★ 972 629-161
54AS153	TI	SN54AS153	★ 972 628-44
54AS157	TI	SN54AS157	★ 975 629-22
54AS158	TI	SN54AS158	★ 975 628-131
54AS160	TI	SN54AS160	★ 977 610-46
54AS161	TI	SN54AS161	★ 977 608-14
54AS162	TI	SN54AS162	★ 978 610-94
54AS163	TI	SN54AS163	★ 978 608-59
54AS168	TI	SN54AS168	★ 980 611-1
54AS169	TI	SN54AS169	★ 980 608-185
54AS174	TI	SN54AS174	★ 983 615-162
54AS175	TI	SN54AS175	★ 983 615-50
54AS181	TI	SN54AS181A	★ 985 604-27
54AS182	TI	SN54AS182	★ 986 604-82
54AS194	TI	SN54AS194	★ 990 631-162
54AS195	TI	SN54AS195	★ 991 631-58
54AS20	TI	SN54AS20	★ 926 620-56
54AS21	TI	SN54AS21	★ 927 618-125
54AS230	TI	SN54AS230	★ 998 634-78
54AS231	TI	SN54AS231	★ 998 634-79
54AS240	TI	SN54AS240	★ 998 633-152
	TI	SN54AS240	2670-8
54AS241	TI	SN54AS241	★ 999 634-27
	TI	SN54AS241	2669-42
54AS242	TI	SN54AS242	★ 999 633-83
54AS243	TI	SN54AS243	★ 1000 633-84
54AS244	TI	SN54AS244	★ 1000 634-28
54AS245	TI	SN54AS245	★ 1001 635-88
	TI	SN54AS245	2678-26
54AS251	TI	SN54AS251	★ 1003 630-40
54AS253	TI	SN54AS253	★ 1003 627-169
54AS257	TI	SN54AS257	★ 1004
54AS258	TI	SN54AS258	★ 1005 628-92
54AS2620	TI	SN54AS2620	★ 1126 635-39
54AS2623	TI	SN54AS2623	★ 1126 635-45
54AS264	TI	SN54AS264	★ 1006 604-83
54AS2640	TI	SN54AS2640	★ 1127 635-40
54AS2643	TI	SN54AS2643	635-43
54AS2645	TI	SN54AS2645	★ 1127 635-46
54AS27	TI	SN54AS27	★ 929 624-4
54AS280	TI	SN54AS280	★ 1009 639-81
54AS282	TI	SN54AS282	★ 1010 604-84
54AS286	TI	SN54AS286	★ 1012 639-110
54AS298	TI	SN54AS298	★ 1015 629-68
54AS299	TI	SN54AS299	★ 1016 632-165
54AS30	TI	SN54AS30	★ 929 622-32
54AS32	TI	SN54AS32	★ 930 623-96
54AS323	TI	SN54AS323	★ 1018 632-166
54AS34	TI	SN54AS34	★ 931 606-18
54AS352	TI	SN54AS352	★ 1020 627-143
54AS353	TI	SN54AS353	★ 1021 627-108
54AS373	TI	SN54AS373	★ 1025 626-52
54AS374	TI	SN54AS374	★ 1026 616-109
54AS395	TI	SN54AS395	★ 1031 631-129
54AS533	TI	SN54AS533	★ 1047 626-116
54AS534	TI	SN54AS534	★ 1047 616-41
54AS573	TI	SN54AS573	★ 1054 626-53
54AS574	TI	SN54AS574	★ 1054 616-110
54AS575	TI	SN54AS575	★ 1054 616-111
54AS576	TI	SN54AS576	★ 1055 616-46
54AS577	TI	SN54AS577	★ 1055 616-112
54AS580	TI	SN54AS580	★ 1056 626-117
54AS620	TI	SN54AS620	★ 1066 636-72
54AS621	TI	SN54AS621	★ 1066 636-40
54AS622	TI	SN54AS622	★ 1066 636-41
54AS623	TI	SN54AS623	★ 1066 636-73
54AS638	TI	SN54AS638	★ 1073 634-135
54AS639	TI	SN54AS639	★ 1073 634-136
54AS640	TI	SN54AS640	★ 1074 635-9
54AS641	TI	SN54AS641	★ 1074 635-58
54AS642	TI	SN54AS642	★ 1074 634-148
54AS643	TI	SN54AS643	★ 1074 635-10
54AS644	TI	SN54AS644	★ 1074 635-143
54AS645	TI	SN54AS645	★ 1074 635-89
54AS646	TI	SN54AS646	★ 1076 636-8
54AS648	TI	SN54AS648	★ 1076 636-9
54AS651	TI	SN54AS651	★ 1078 635-11
54AS652	TI	SN54AS652	★ 1078 635-12
54AS74	TI	SN54AS74	★ 945 614-170
54AS756	TI	SN54AS756	★ 1091 633-138
54AS757	TI	SN54AS757	★ 1091 634-11
54AS758	TI	SN54AS758	★ 1092 633-61
54AS759	TI	SN54AS759	★ 1092 633-62
54AS760	TI	SN54AS760	★ 1092 634-111
54AS762	TI	SN54AS762	★ 1093 634-112
54AS763	TI	SN54AS763	★ 1093 634-109
54AS800	TI	SN54AS800	★ 1093 613-142
54AS802	TI	SN54AS802	★ 1094 613-144
54AS804	TI	SN54AS804	622-17
	TI	SN54AS804A	★ 1094 614-110
54AS805	TI	SN54AS805	624-118
	TI	SN54AS805A	★ 1095 614-114
54AS808	TI	SN54AS808	619-142
	TI	SN54AS808A	★ 1095 614-106
54AS821	TI	SN54AS821	★ 1096 616-180
54AS822	TI	SN54AS822	★ 1096 616-178
54AS823	TI	SN54AS823	★ 1096 616-176
54AS824	TI	SN54AS824	★ 1097 616-174
54AS825	TI	SN54AS825	★ 1097 616-172
54AS826	TI	SN54AS826	★ 1097 616-170
54AS832	TI	SN54AS832	623-130
	TI	SN54AS832A	★ 1098 614-118
54AS841	TI	SN54AS841	★ 1098 626-152
54AS842	TI	SN54AS842	★ 1098 626-150
54AS843	TI	SN54AS843	★ 1099 626-146

¶ Indicates page number in Application Note Directory.
★ Indicates addition data is provided on the page noted.

Base Number	Source	Device	Page-Line
54AS844			
	TI	SN54AS844	★1099
			626-144
54AS845			
	TI	SN54AS845	★1099
			626-138
54AS846			
	TI	SN54AS846	★1100
			626-100
54AS850			
	TI	SN54AS850	★1100
			630-70
54AS851			
	TI	SN54AS851	★1100
			630-71
54AS852			
	TI	SN54AS852	★1101
			636-98
54AS856			
	TI	SN54AS856	★1101
			636-99
54AS857			
	TI	SN54AS857	★1102
			633-136
54AS866			
	TI	SN54AS866	★1103
			605-126
54AS867			
	TI	SN54AS867	★1103
			608-170
			¶ 254-9
54AS869			
	TI	SN54AS869	★1103
			608-171
			¶ 254-9
54AS870			
	TI	SN54AS870	★1104
			626-161
54AS871			
	TI	SN54AS871	★1105
			626-162
54AS873			
	TI	SN54AS873	★1106
			625-79
54AS874			
	TI	SN54AS874	★1106
			614-139
54AS876			
	TI	SN54AS876	★1107
			614-140
54AS877			
	TI	SN54AS877	★1107
			639-25
54AS878			
	TI	SN54AS878	★1108
			614-141
54AS879			
	TI	SN54AS879	★1108
			614-142
54AS880			
	TI	SN54AS880	★1109
			625-161
54AS881			
	TI	SN54AS881A	★1109
			604-28
54AS882			
	TI	SN54AS882	★1110
			604-85
54AS885			
	TI	SN54AS885	★1110
			603-128
54AS888			
	TI	SN54AS888	★1111
			★1129
			1337-73
54AS889			
	TI	SN54AS889	★1111
			★1129
			1337-74
54AS890			
	TI	SN54AS890	★1112
			★1142
			1337-77
54AS891			
	TI	SN54AS891	★1112
			★1142
			1337-78
54AS894			
	TI	SN54AS894	605-45
54AS897			
	TI	SN54AS897	★1113
			603-21
54AS95	TI	SN54AS95	★954
			631-95
54C00	National	MM54C00	583-84
54C02	National	MM54C02	585-43
54C04	National	MM54C04	573-199
54C08	National	MM54C08	582-128
54C10	National	MM54C10	583-28
54C107	National	MM54C107	581-172
54C14	National	MM54C14	593-133
			¶ 259-8
54C150	National	MM54C150	589-64
54C151	National	MM54C151	588-167
54C154	National	MM54C154	579-76
54C157	National	MM54C157	588-83
54C160	National	MM54C160	576-105
54C161	National	MM54C161	574-88
54C162	National	MM54C162	576-65
54C163	National	MM54C163	574-53
54C164	National	MM54C164	591-100
			3790-107
54C165	National	MM54C165	591-72
			3790-75
54C173	National	MM54C173	580-100
54C174	National	MM54C174	580-164
54C175	National	MM54C175	580-135
54C192	National	MM54C192	576-147
54C193	National	MM54C193	574-136
54C195	National	MM54C195	590-133
			3789-41
54C20	National	MM54C20	582-182
54C200	National	MM54C200	587-150
			3772-59
54C221	National	MM54C221	589-134
			¶ 259-11
54C240	National	MM54C240	594-15
54C244	National	MM54C244	593-169
54C30	National	MM54C30	583-136
54C32	National	MM54C32	584-88
54C374	National	MM54C374	581-86
54C42	National	MM54C42	578-36
54C48	National	MM54C48	578-72
54C73	National	MM54C73	581-173
54C74	National	MM54C74	580-52
54C76	National	MM54C76	582-21
54C83	National	MM54C83	571-42
54C85	National	MM54C85	571-111
54C86	National	MM54C86	585-127
54C89	National	MM54C89	587-131
54C90	National	MM54C90	576-92
54C901	National	MM54C901	572-171
			¶ 290-1
54C902	National	MM54C902	572-173
			¶ 290-1
54C903	National	MM54C903	572-167
			¶ 290-1
54C904	National	MM54C904	572-169
			¶ 290-1
54C905	National	MM54C905	592-132
54C906	National	MM54C906	572-163
54C907	National	MM54C907	572-165
54C909	National	MM54C909	592-56
			3163-2
54C910	National	MM54C910	587-168
54C914	National	MM54C914	593-134
54C915	National	MM54C915	580-39
			2663-82
54C920	National	MM54C920	588-30
			¶ 320-6
54C921	National	MM54C921	588-31
			¶ 320-6
54C922	National	MM54C922	2667-1
			¶ 254-6
54C923	National	MM54C923	2667-6
54C929	National	MM54C929	588-10
			¶ 320-6
54C93	National	MM54C93	574-39
54C930	National	MM54C930	588-11
			¶ 320-6
54C941	National	MM54C941	573-140
			2669-34
54C95	National	MM54C95	590-102
			3789-55
54F00	Fairchild	54F00	621-175
	Motorola	MC54F00	★822
			621-177
	Signetics	54F00	621-179
54F02	Fairchild	54F02	624-76
	Motorola	MC54F02	★822
			624-78
54F04	Fairchild	54F04	607-69
	Motorola	MC54F04	★822
			607-71
	Signetics	54F04	607-73
54F08	Fairchild	54F08	619-108
	Motorola	MC54F08	★822
			619-110
54F10	Fairchild	54F10	620-144
	Motorola	MC54F10	★822
			620-126
54F109	Fairchild	54F109	617-59
	Motorola	MC54F109	★822
			617-61
54F11	Fairchild	54F11	619-8
	Motorola	MC54F11	★822
			619-10
54F112	Fairchild	54F112	618-47
	Motorola	MC54F112	★822
			618-49
54F113	Fairchild	54F113	618-8
	Motorola	MC54F113	★822
			618-10
54F114	Fairchild	54F114	618-84
	Motorola	MC54F114	★822
			618-86
54F138	Fairchild	54F138	613-51
	Motorola	MC54F138	★822
			613-53
54F139	Fairchild	54F139	612-130
	Motorola	MC54F139	★822
			612-132
	Signetics	54F139	612-134
54F148	Fairchild	54F148	639-42
54F151	Fairchild	54F151	629-163
	Motorola	MC54F151	★822
			629-165
54F153	Fairchild	54F153	628-46
	Motorola	MC54F153	★822
			628-48
54F157	Fairchild	54F157	629-24
	Motorola	MC54F157	★822
			629-26
	Signetics	54F157	629-28
54F158	Fairchild	54F158	628-133
	Motorola	MC54F158	★822
			628-135
	Signetics	54F158	628-137
54F160	Fairchild	54F160A	★710
			610-48
	Motorola	MC54F160	★822
			610-50
54F161	Fairchild	54F161A	★714
			608-16
	Motorola	MC54F161	★822
			608-18
54F162	Fairchild	54F162A	★710
			610-96
	Motorola	MC54F162	★822
			610-98
54F163	Fairchild	54F163A	★714
			608-61
	Motorola	MC54F163	★822
			608-63
54F164	Fairchild	54F164	632-37
54F168	Motorola	MC54F168	★822
			611-3
54F169	Fairchild	54F169	608-187
	Motorola	MC54F169	★822
			609-4
54F174	Fairchild	54F174	618-114
	Motorola	MC54F174	★822
			615-165
54F175	Fairchild	54F175	615-52
	Motorola	MC54F175	★822
			615-54
54F181	Fairchild	54F181	★718
			604-31
			(Continued)
54F181	Motorola	MC54F181	★822
			604-37
	Signetics	54F181	604-43
54F182	Fairchild	54F182	604-90
	Motorola	MC54F182	★822
			604-92
54F189	Fairchild	54F189	627-69
	Motorola	MC54F189	★822
			627-73
54F190	Fairchild	54F190	★722
			611-85
	Motorola	MC54F190	★822
			611-87
54F191	Fairchild	54F191	★722
			609-51
	Motorola	MC54F191	★822
			609-53
54F192	Fairchild	54F192	★726
			611-49
	Motorola	MC54F192	★822
			611-51
54F193	Fairchild	54F193	★726
			609-97
	Motorola	MC54F193	★822
			609-99
54F194	Fairchild	54F194	631-164
	Motorola	MC54F194	★822
			631-166
54F195	Motorola	MC54F195	★822
			616-168
54F20	Fairchild	54F20	620-58
	Motorola	MC54F20	★822
			620-60
	Signetics	54F20	620-62
54F211	Fairchild	54F211	627-89
54F212	Fairchild	54F212	627-90
54F213	Fairchild	54F213	627-95
54F219	Fairchild	54F219	627-70
54F240	Fairchild	54F240	★729
			633-156
	Fairchild	54F240	2669-55
	Motorola	MC54F240	★822
			633-158
	Signetics	54F240	★881
			633-160
54F241	Fairchild	54F241	★729
			634-30
	Motorola	MC54F241	★822
			634-32
	Signetics	54F241	★881
			634-34
54F242	Fairchild	54F242	633-88
	Motorola	MC54F242	★822
			633-92
	Signetics	54F242	633-96
54F243	Fairchild	54F243	633-89
	Motorola	MC54F243	★822
			633-93
	Signetics	54F243	633-97
54F244	Fairchild	54F244	★729
			634-83
	Motorola	MC54F244	★822
			634-85
	Signetics	54F244	★882
			634-87
54F245	Fairchild	54F245	635-92
	Motorola	MC54F245	★822
			635-96
	Signetics	54F245	★883
			635-102
54F251	Fairchild	54F251	630-42
	Motorola	MC54F251	★822
			630-44
54F253	Fairchild	54F253	627-171
	Motorola	MC54F253	★822
			627-173
54F257	Fairchild	54F257	628-167
	Motorola	MC54F257	★822
			628-169
	Signetics	54F257	628-171
54F258	Fairchild	54F258	628-94
	Motorola	MC54F258	★822
			628-96
	Signetics	54F258	628-98
54F269	Fairchild	54F269	609-1

Arranged alphanumerically from left to right.

© IC MASTER 1984

Base Number	Source	Device	Page-Line
54F280	Fairchild	54F280	639-83
	Motorola	**MC54F280**	★ **822**
			639-85
	Signetics	54F280	639-87
	Signetics	**54F280A**	★ **884**
54F283	Fairchild	54F283	605-85
	Motorola	**MC54F283**	★ **822**
			605-87
54F289	Fairchild	54F289	627-48
	Motorola	**MC54F289**	★ **822**
			627-52
54F2960			
	Motorola	**MC54F2960**	★ **822**
			635-97
	Motorola	MC54F2960	1336-89
54F2961			
	Motorola	**MC54F2961**	★ **822**
			1336-97
54F2962			
	Motorola	**MC54F2962**	★ **822**
			1336-98
54F2968			
	Motorola	**MC54F2968**	★ **822**
			1336-85
54F2969			
	Motorola	**MC54F2969**	★ **822**
			1336-106
54F2970			
	Motorola	**MC54F2970**	★ **822**
			1336-109
54F299	**Fairchild**	**54F299**	★ **731**
			632-169
	Motorola	**MC54F299**	★ **822**
			632-173
54F311	Fairchild	54F311	627-85
54F312	Fairchild	54F312	627-86
54F313	Fairchild	54F313	627-93
54F319	Fairchild	54F319	627-49
54F32	Fairchild	54F32	623-99
	Motorola	**MC54F32**	★ **822**
			623-101
54F322	Fairchild	54F322	632-121
54F323	Fairchild	54F323	632-170
	Motorola	**MC54F323**	★ **822**
			632-174
54F350	Fairchild	54F350	629-119
			629-123
	Motorola	**MC54F350**	★ **822**
			629-121
			638-137
54F352	Fairchild	54F352	627-145
	Motorola	**MC54F352**	★ **822**
			627-147
54F353	Fairchild	54F353	627-111
	Motorola	**MC54F353**	★ **822**
			627-113
54F365	**Signetics**	**54F365**	★ **885**
			606-48
54F366	**Signetics**	**54F366**	★ **885**
54F367	**Signetics**	**54F367**	★ **885**
			606-49
54F368	**Signetics**	**54F368**	★ **885**
			607-3
54F373	**Fairchild**	**54F373**	★ **734**
			626-56
	Motorola	**MC54F373**	★ **822**
			626-62
	Signetics	**54F373**	★ **886**
			626-64
54F374	**Fairchild**	**54F374**	★ **736**
			616-117
	Motorola	**MC54F374**	★ **822**
			616-119
	Signetics	**54F374**	★ **886**
			616-121
54F378	Fairchild	54F378	616-1
	Motorola	**MC54F378**	★ **822**
			616-3
54F379	Fairchild	54F379	615-96
	Motorola	**MC54F379**	★ **822**
			615-98
54F381	Fairchild	54F381	604-32
	Motorola	**MC54F381**	★ **822**
			604-38
54F382	Fairchild	54F382	604-33
	Motorola	**MC54F382**	★ **822**
			604-39
54F384	Fairchild	54F384	605-11
54F385	Fairchild	54F385	603-6
54F398	Fairchild	54F398	629-70
54F399	Fairchild	54F399	629-71
54F401	Fairchild	54F401	2665-7
54F402	**Fairchild**	**54F402**	★ **738**
			2665-11
54F403	**Fairchild**	**54F403**	★ **743**
			637-10
	Fairchild	54F403	3757-3
54F412	Fairchild	54F412	626-57
54F413	**Fairchild**	**54F413**	★ **750**
			637-12
	Fairchild	54F413	3757-46
54F416	Fairchild	54F416	2665-24
54F418	**Fairchild**	**54F418**	★ **757**
			2665-25
			2666-1
54F430	Fairchild	54F430	2665-64
54F432	Fairchild	54F432	626-58
54F433	**Fairchild**	**54F433**	★ **743**
			637-14
	Fairchild	54F433	3757-47
54F492	Fairchild	54F492	2665-12
54F500	**Fairchild**	**54F500**	★ **762**
			2625-6
54F510	Fairchild	54F510	638-144
54F521	Fairchild	54F521	603-94
	Motorola	**MC54F521**	★ **822**
			603-96
	Signetics	54F521	603-98
54F524	Fairchild	54F524	603-31
54F525	Fairchild	54F525	639-133
54F526	Fairchild	54F526	636-90
54F533	Fairchild	54F533	626-120
	Motorola	**MC54F533**	★ **822**
			626-122
	Signetics	54F533	626-124
54F534	Fairchild	54F534	616-48
	Motorola	**MC54F534**	★ **822**
			616-50
	Signetics	54F534	616-52
54F537	Fairchild	54F537	612-110
	Motorola	**MC54F537**	★ **822**
			612-112
54F538	Fairchild	54F538	613-84
	Motorola	**MC54F538**	★ **822**
			613-86
54F539	Fairchild	54F539	613-4
	Motorola	**MC54F539**	★ **822**
			613-6
54F543	Fairchild	54F543	636-12
54F544	Fairchild	54F544	636-13
54F545	Fairchild	54F545	635-93
54F547	Fairchild	54F547	613-35
54F548	Fairchild	54F548	613-36
54F550	Fairchild	54F550	636-14
54F551	Fairchild	54F551	636-15
54F557	Fairchild	54F557	605-21
54F558	Fairchild	54F558	605-1
54F559	Fairchild	54F559	604-108
54F568	Fairchild	54F568	610-179
54F569	Fairchild	54F569	608-174
54F570	Fairchild	54F570	627-46
54F571	Fairchild	54F571	627-44
54F579	Fairchild	54F579	608-175
54F582	Fairchild	54F582	605-47
54F583	Fairchild	54F583	603-164
54F588	Fairchild	54F588	637-22
54F604	Fairchild	54F604	625-163
	Signetics	**54F604**	★ **887**
			625-171
54F605	Fairchild	54F605	625-164
	Signetics	**54F605**	★ **887**
			625-172
54F606	Fairchild	54F606	625-165
54F607	Fairchild	54F607	625-166
54F610	Fairchild	54F610	637-25
54F611	Fairchild	54F611	637-26
54F612	Fairchild	54F612	637-27
54F613	Fairchild	54F613	637-28
54F620	**Motorola**	**MC54F620**	★ **822**
			636-76
54F621	Motorola	MC54F621	636-44
54F623	**Motorola**	**MC54F623**	★ **822**
			636-77
54F630	Fairchild	54F630	2665-26
	Signetics	**54F630**	★ **888**
			2665-43
54F631	Fairchild	54F631	2665-27
	Signetics	**54F631**	★ **888**
			2665-44
54F64	Fairchild	54F64	623-53
	Motorola	**MC54F64**	★ **822**
			623-55
	Signetics	54F64	623-57
54F640	**Motorola**	**MC54F640**	★ **822**
			635-17
54F643	**Motorola**	**MC54F643**	★ **822**
			635-18
54F645	Motorola	MC54F645	635-98
54F646	**Signetics**	**54F646**	★ **889**
			636-20
54F647	**Signetics**	**54F647**	★ **889**
			635-174
54F648	**Signetics**	**54F648**	★ **889**
			636-21
54F649	**Signetics**	**54F649**	★ **889**
			635-175
54F655	**Signetics**	**54F655**	★ **890**
			607-106
54F656	**Signetics**	**54F656**	★ **890**
			606-93
54F673	Fairchild	54F673	633-54
			3791-21
54F674	Fairchild	54F674	633-41
			3791-22
54F675	Fairchild	54F675	633-51
			3791-23
54F676	**Fairchild**	**54F676**	★ **763**
			633-48
	Fairchild	54F676	3791-24
54F74	Fairchild	54F74	614-172
	Motorola	**MC54F74**	★ **822**
			614-174
54F779	Fairchild	54F779	608-176
54F784	Fairchild	54F784	605-25
54F86	Fairchild	54F86	624-171
	Motorola	**MC54F86**	★ **822**
			624-173
	Signetics	54F86	624-175
54H00	Fairchild	54H00	621-181
	National	DM54H00	621-185
	TI	**SN54H00**	★ **920**
			621-187
54H01	Fairchild	54H01	621-110
	National	DM54H01	621-112
	TI	**SN54H01**	★ **920**
			621-114
54H04	Fairchild	54H04	607-75
	National	DM54H04	607-77
	TI	**SN54H04**	★ **921**
			607-79
54H05	Fairchild	54H05	606-136
	National	DM54H05	606-138
	TI	SN54H05	606-140
54H08	Fairchild	54H08	619-113
	National	DM54H08	619-117
54H09	Fairchild	54H09	619-57
54H10	Fairchild	54H10	620-148
	National	DM54H10	620-150
	TI	**SN54H10**	★ **923**
			620-152
54H101	Fairchild	54H101	617-36
	TI	**SN54H101**	★ **956**
			617-38
54H102	Fairchild	54H102	617-33
	TI	**SN54H102**	★ **956**
			617-34
54H103	Fairchild	54H103	618-37
	National	DM54H103	618-39
	TI	**SN54H103**	★ **956**
			618-41
54H106	Fairchild	54H106	618-52
	National	DM54H106	618-54
	TI	**SN54H106**	★ **957**
			618-56
54H108	Fairchild	54H108	617-183
	National	DM54H108	617-185
			(Continued)
54H108	**TI**	**SN54H108**	★ **958**
			618-1
54H11	Fairchild	54H11	619-13
	National	DM54H11	619-15
	TI	**SN54H11**	★ **923**
			619-17
54H15	**TI**	**SN54H15**	★ **925**
			618-152
54H183	Fairchild	54H183	603-170
	TI	**SN54H183**	★ **986**
			603-173
54H20	Fairchild	54H20	620-64
	National	DM54H20	620-66
	TI	**SN54H20**	★ **926**
			620-68
54H21	Fairchild	54H21	618-127
	National	DM54H21	618-129
	TI	**SN54H21**	★ **927**
			618-131
54H22	Fairchild	54H22	620-10
	National	DM54H22	620-12
	TI	**SN54H22**	★ **927**
			620-14
54H30	Fairchild	54H30	622-34
	National	DM54H30	622-36
	TI	**SN54H30**	★ **929**
			622-38
54H40	Fairchild	54H40	619-164
	National	DM54H40	619-167
	TI	**SN54H40**	★ **933**
			619-169
54H50	Fairchild	54H50	622-108
	National	DM54H50	622-110
	TI	**SN54H50**	★ **936**
			622-112
54H51	Fairchild	54H51	622-129
	National	DM54H51	622-131
	TI	**SN54H51**	★ **936**
			622-133
54H52	Fairchild	54H52	622-89
	National	DM54H52	622-91
	TI	**SN54H52**	★ **937**
			622-93
54H53	Fairchild	54H53	623-12
	National	DM54H53	623-14
	TI	**SN54H53**	★ **937**
			623-16
54H54	Fairchild	54H54	623-5
	National	DM54H54	623-7
	TI	**SN54H54**	★ **938**
			623-9
54H55	Fairchild	54H55	622-183
	National	DM54H55	622-185
	TI	**SN54H55**	★ **939**
			623-1
54H60	Fairchild	54H60	637-161
	National	DM54H60	637-162
	TI	**SN54H60**	★ **940**
			637-164
54H61	Fairchild	54H61	638-2
	National	DM54H61	638-4
	TI	**SN54H61**	★ **940**
			638-6
54H62	Fairchild	54H62	638-83
	National	DM54H62	638-85
	TI	**SN54H62**	★ **941**
			638-87
54H71	Fairchild	54H71	617-27
	National	DM54H71	617-28
	TI	**SN54H71**	★ **943**
			617-30
54H72	Fairchild	54H72	617-15
	National	DM54H72	617-17
	TI	**SN54H72**	★ **944**
			617-19
54H73	Fairchild	54H73	617-119
	National	DM54H73	617-125
	TI	**SN54H73**	★ **944**
			617-127
54H74	Fairchild	54H74	615-3
	National	DM54H74	615-7
	TI	**SN54H74**	★ **945**
			615-9
54H76	Fairchild	54H76	617-167
	National	DM54H76	617-168
			(Continued)

¶ Indicates page number in Application Note Directory.
★ Indicates addition data is provided on the page noted.

Base Number	Source	Device	Page-Line
54H76	TI	SN54H76	★ 946
			617-170
54H78	Fairchild	54H78	617-81
	National	DM54H78	617-82
	TI	SN54H78	★ 947
			617-84
54H87	Fairchild	54H87	638-149
	Motorola	MC54H87	638-151
	TI	SN54H87	★ 951
			638-153
54HC00	Fairchild	54HC00	583-67
	Motorola	MC54HC00	583-76
	National	MM54HC00	583-85
	RCA	CD54HC00	★ 842
			583-96
	SPI	SP54HC00	★ 848
			583-102
	TI	SN54HC00	583-118
54HC02	Fairchild	54HC02	585-29
	Motorola	MC54HC02	585-38
	National	MM54HC02	585-44
	RCA	CD54HC02	★ 842
			585-56
	SPI	SP54HC02	★ 848
			585-61
	TI	SN54HC02	585-78
54HC03	Motorola	MC54HC03	583-64
54HC04	Motorola	MC54HC04	573-189
	National	MM54HC04	574-1
	RCA	CD54HC04	★ 842
			574-8
	SPI	SP54HC04	★ 848
			574-16
	TI	SN54HC04	574-31
54HC07	Fairchild	54HC07	573-89
54HC08	Fairchild	54HC08	582-117
	Motorola	MC54HC08	582-124
	National	MM54HC08	582-129
	RCA	CD54HC08	★ 842
			582-137
	SPI	SP54HC08	★ 848
			582-142
	TI	SN54HC08	582-154
54HC10	Fairchild	54HC10	583-15
	Motorola	MC54HC10	583-24
	National	MM54HC10	583-29
	RCA	CD54HC10	★ 842
			583-42
	SPI	SP54HC10	★ 848
			583-46
	TI	SN54HC10	583-58
54HC107			
	Motorola	MC54HC107	581-168
	National	MM54HC107	581-174
	RCA	CD54HC107	★ 842
			581-181
	SPI	SP54HC107	★ 848
			581-189
	TI	SN54HC107	581-197
54HC109			
	Fairchild	54HC109	582-6
	Motorola	MC54HC109	582-15
	National	MM54HC109	582-22
	RCA	CD54HC109	★ 842
			582-34
	SPI	SP54HC109	★ 848
			582-38
	TI	SN54HC109	582-52
54HC11	Motorola	MC54HC11	582-86
	National	MM54HC11	582-90
	RCA	CD54HC11	★ 842
			582-96
	SPI	SP54HC11	★ 848
			582-100
	TI	SN54HC11	582-112
54HC112			
	Fairchild	54HC112	581-152
	Motorola	MC54HC112	581-154
	National	MM54HC112	581-156
	RCA	CD54HC112	★ 842
			581-159
	SPI	SP54HC112	★ 848
			581-162
54HC113			
	Motorola	MC54HC113	581-144
	SPI	SP54HC113	★ 848
			(Continued)

Base Number	Source	Device	Page-Line
54HC113			
	SPI	SP54HC113	581-146
	TI	SN54HC113	581-148
54HC123			
	Motorola	MC54HC123	589-97
	National	MM54HC123	589-101
	RCA	CD54HC123	★ 842
			589-106
54HC125			
	Fairchild	54HC125	572-49
	Motorola	MC54HC125	572-22
	National	MM54HC125	572-51
	SPI	SP54HC125	★ 848
			572-53
54HC126			
	Motorola	MC54HC126	572-23
	National	MM54HC126	572-44
	SPI	SP54HC126	★ 848
54HC132			
	Fairchild	54HC132	593-84
	Motorola	MC54HC132	593-91
	National	MM54HC132	593-95
	RCA	CD54HC132	★ 842
			593-100
	SPI	SP54HC132	★ 848
	TI	SN54HC132	593-114
54HC133			
	Fairchild	54HC133	583-157
	Motorola	MC54HC133	583-159
	National	MM54HC133	583-161
	SPI	SP54HC133	★ 848
			583-164
	TI	SN54HC133	583-166
54HC137			
	Motorola	MC54HC137	579-4
	TI	SN54HC137	579-16
54HC138			
	Fairchild	54HC138	578-146
	Motorola	MC54HC138	578-153
	National	MM54HC138	578-157
	RCA	CD54HC138	★ 842
			578-161
	SPI	SP54HC138	★ 848
			578-168
	TI	SN54HC138	578-182
54HC139			
	Fairchild	54HC139	578-104
	Motorola	MC54HC139	578-111
	National	MM54HC139	578-113
	RCA	CD54HC139	★ 842
			578-117
	SPI	SP54HC139	★ 848
			578-121
	TI	SN54HC139	578-133
54HC14	Fairchild	54HC14	573-165
	Motorola	MC54HC14	593-127
	National	MM54HC14	593-120
	RCA	CD54HC14	★ 842
			593-140
	SPI	SP54HC14	★ 848
			593-144
	TI	SN54HC14	593-155
54HC147			
	Fairchild	54HC147	589-56
			589-60
	Motorola	MC54HC147	579-92
	National	MM54HC147	589-58
			589-62
	RCA	CD54HC147	★ 842
			579-94
	SPI	SP54HC147	★ 848
			579-98
54HC148			
	SPI	SP54HC148	★ 848
			579-89
54HC151			
	Fairchild	54HC151	588-163
	Motorola	MC54HC151	588-165
	National	MM54HC151	588-168
	RCA	CD54HC151	★ 842
			588-172
	SPI	SP54HC151	★ 848
			588-176
	TI	SN54HC151	588-180
54HC153			
	Fairchild	54HC153	589-14
	Motorola	MC54HC153	588-56
			(Continued)

Base Number	Source	Device	Page-Line
54HC153			
	National	MM54HC153	588-75
	RCA	CD54HC153	★ 842
			588-77
	SPI	SP54HC153	★ 848
			588-59
54HC154			
	Fairchild	54HC154	579-70
	Motorola	MC54HC154	579-74
	National	MM54HC154	579-77
	RCA	CD54HC154	★ 842
			579-81
	TI	SN54HC154	579-87
54HC157			
	Motorola	MC54HC157	588-81
	National	MM54HC157	588-84
	RCA	CD54HC157	★ 842
			588-90
	SPI	SP54HC157	★ 848
			588-94
	TI	SN54HC157	588-98
54HC158			
	Motorola	MC54HC158	588-104
	National	MM54HC158	588-85
	RCA	CD54HC158	★ 842
			588-107
	SPI	SP54HC158	★ 848
			588-111
	TI	SN54HC158	588-117
54HC160			
	Fairchild	54HC160	576-94
	Motorola	MC54HC160	576-101
	National	MM54HC160	576-106
	RCA	CD54HC160	★ 842
			576-112
	SPI	SP54HC160	★ 848
			576-116
	TI	SN54HC160	576-124
54HC161			
	Motorola	MC54HC161	574-84
	National	MM54HC161	574-89
	RCA	CD54HC161	★ 842
			574-96
	SPI	SP54HC161	★ 848
			574-100
54HC162			
	Fairchild	54HC162	576-54
	Motorola	MC54HC162	576-61
	National	MM54HC162	576-66
	RCA	CD54HC162	★ 842
			576-71
	SPI	SP54HC162	★ 848
			576-75
	TI	SN54HC162	576-85
54HC163			
	Fairchild	54HC163	574-42
	Motorola	MC54HC163	574-49
	National	MM54HC163	574-54
	RCA	CD54HC163	★ 842
			574-60
	SPI	SP54HC163	★ 848
			574-64
54HC164			
	Fairchild	54HC164	591-96
	Motorola	MC54HC164	591-98
	National	MM54HC164	591-101
	RCA	CD54HC164	★ 842
			591-104
	TI	SN54HC164	591-111
54HC165			
	Fairchild	54HC165	591-68
	Motorola	MC54HC165	591-70
	National	MM54HC165	591-73
	RCA	CD54HC165	★ 842
			591-76
	TI	SN54HC165	591-86
54HC166			
	Motorola	MC54HC166	591-117
	RCA	CD54HC166	★ 842
			591-119
54HC173			
	Fairchild	54HC173	580-89
	Motorola	MC54HC173	580-96
	RCA	CD54HC173	★ 842
			580-105
	SPI	SP54HC173	★ 848
			(Continued)

Base Number	Source	Device	Page-Line
54HC173			
	SPI	SP54HC173	580-109
	TI	SN54HC173	580-121
54HC174			
	Motorola	MC54HC174	580-160
	RCA	CD54HC174	★ 842
			580-169
	SPI	SP54HC174	★ 848
			580-173
	TI	SN54HC174	580-184
54HC175			
	Fairchild	54HC175	580-125
	Motorola	MC54HC175	580-132
	National	MM54HC175	580-136
	RCA	CD54HC175	★ 842
			580-141
	SPI	SP54HC175	★ 848
			580-174
	TI	SN54HC175	580-150
54HC176			
	SPI	SP54HC176	★ 848
			592-59
54HC177			
	SPI	SP54HC177	★ 848
54HC181			
	Motorola	MC54HC181	571-79
54HC182			
	Motorola	MC54HC182	571-93
54HC190			
	Motorola	MC54HC190	577-11
	RCA	CD54HC190	★ 842
			577-13
54HC191			
	Motorola	MC54HC191	574-128
	RCA	CD54HC191	★ 842
			574-146
54HC192			
	Fairchild	54HC192	576-131
	Motorola	MC54HC192	576-141
	National	MM54HC192	576-146
	RCA	CD54HC192	★ 842
			576-156
	SPI	SP54HC192	★ 848
			576-160
	TI	SN54HC192	576-176
54HC193			
	Fairchild	54HC193	574-115
	Motorola	MC54HC193	574-129
	National	MM54HC193	574-137
	RCA	CD54HC193	★ 842
			574-147
	SPI	SP54HC193	★ 848
			574-154
54HC194			
	Motorola	MC54HC194	590-100
	National	MM54HC194	590-103
	RCA	CD54HC194	★ 842
			590-106
	TI	SN54HC194	590-115
54HC195			
	Fairchild	54HC195	590-125
	Motorola	MC54HC195	590-129
	National	MM54HC195	590-134
	RCA	CD54HC195	★ 842
			590-137
	TI	SN54HC195	590-146
54HC20	Fairchild	54HC20	582-168
	Motorola	MC54HC20	582-177
	National	MM54HC20	583-30
	RCA	CD54HC20	★ 842
			582-192
	SPI	SP54HC20	★ 848
			582-196
	TI	SN54HC20	583-9
54HC221			
	Fairchild	54HC221	589-119
	Motorola	MC54HC221	589-126
	RCA	CD54HC221	★ 842
			589-141
	TI	SN54HC221	589-161
54HC237			
	Motorola	MC54HC237	579-5
54HC238			
	RCA	CD54HC238	★ 842
			578-162

Arranged alphanumerically from left to right

© IC MASTER 1984

Base Number	Source	Device	Page-Line
54HC240			
	Fairchild	54HC240	594-4
	Motorola	MC54HC240	594-11
		¶	268-3
	National	MM54HC240	594-16
	RCA	**CD54HC240** ★	**842**
			594-20
	SPI	**SP54HC240** ★	**848**
			594-24
54HC241			
	Fairchild	54HC241	594-42
	Motorola	MC54HC241	594-49
		¶	268-3
	National	MM54HC241	594-53
	RCA	**CD54HC241** ★	**842**
			594-56
	SPI	**SP54HC241** ★	**848**
			594-60
54HC242			
	Fairchild	54HC242	593-50
	Motorola	MC54HC242	593-54
		¶	268-3
	National	MM54HC242	593-58
	RCA	**CD54HC242** ★	**842**
			593-62
54HC243			
	Fairchild	54HC243	593-51
	Motorola	MC54HC243	593-55
		¶	268-3
	RCA	**CD54HC243** ★	**842**
			593-63
54HC244			
	Fairchild	54HC244	593-158
	Motorola	MC54HC244	593-165
		¶	268-3
	National	MM54HC244	593-170
	RCA	**CD54HC244** ★	**842**
			593-174
	SPI	**SP54HC244** ★	**848**
54HC245			
	Fairchild	54HC245	594-132
	Motorola	MC54HC245	594-139
		¶	268-3
	RCA	**CD54HC245** ★	**842**
			594-144
	TI	SN54HC245	594-158
54HC251			
	Fairchild	54HC251	589-15
	Motorola	MC54HC251	589-30
	National	MM54HC251	589-12
	RCA	**CD54HC251** ★	**842**
			589-36
	SPI	**SP54HC251** ★	**848**
			589-48
54HC253			
	Fairchild	54HC253	588-46
	Motorola	MC54HC253	588-65
	National	MM54HC253	588-67
	RCA	**CD54HC253** ★	**842**
			588-69
	SPI	**SP54HC253** ★	**848**
			588-73
54HC257			
	Fairchild	54HC257	588-123
	Motorola	MC54HC257	588-125
	National	MM54HC257	588-127
	RCA	**CD54HC257** ★	**842**
			588-131
	SPI	**SP54HC257** ★	**848**
			588-135
54HC258			
	SPI	**SP54HC258** ★	**848**
			588-144
54HC259			
	Fairchild	54HC259	587-44
	Motorola	MC54HC259	587-51
	National	MM54HC259	587-57
	RCA	**CD54HC259** ★	**842**
			587-65
	TI	SN54HC259	587-77
54HC266			
	Motorola	MC54HC266	585-174
	National	MM54HC266	584-55
	SPI	**SP54HC266** ★	**848**
			585-179
	TI	SN54HC266	585-189
54HC27	Fairchild	54HC27	584-178
	Motorola	MC54HC27	584-187
	National	MM54HC27	584-192
	RCA	**CD54HC27** ★	**842**
			585-8
	SPI	**SP54HC27** ★	**848**
			585-12
	TI	SN54HC27	585-24
54HC273			
	Fairchild	54HC273	580-189
	Motorola	MC54HC273	580-191
	RCA	**CD54HC273** ★	**842**
			581-3
	SPI	**SP54HC273** ★	**848**
			581-7
	TI	SN54HC273	581-11
54HC280			
	Fairchild	54HC280	571-179
	Motorola	MC54HC280	571-181
	National	MM54HC280	571-183
	RCA	**CD54HC280** ★	**842**
			571-185
	SPI	**SP54HC280** ★	**848**
			572-2
54HC283			
	Fairchild	54HC283	571-31
	Motorola	MC54HC283	571-38
54HC292			
	Motorola	MC54HC292	592-117
54HC294			
	Motorola	MC54HC294	592-118
54HC297			
	RCA	**CD54HC297** ★	**842**
			592-71
			592-112
54HC298			
	Motorola	MC54HC298	588-149
	SPI	**SP54HC298** ★	**848**
			588-151
54HC299			
	Fairchild	54HC299	591-147
	Motorola	MC54HC299	591-149
	National	MM54HC299	591-151
	RCA	**CD54HC299** ★	**842**
			591-153
	TI	SN54HC299	591-159
54HC30	Fairchild	54HC30	583-127
	Motorola	MC54HC30	583-134
	National	MM54HC30	583-137
	SPI	**SP54HC30** ★	**848**
			583-143
	TI	SN54HC30	583-153
54HC32	Fairchild	54HC32	584-77
	Motorola	MC54HC32	584-84
	National	MM54HC32	584-89
	RCA	**CD54HC32** ★	**842**
			584-96
	SPI	**SP54HC32** ★	**848**
			584-101
	TI	SN54HC32	584-113
54HC354			
	Motorola	MC54HC354	589-31
	National	MM54HC354	589-26
	RCA	**CD54HC354** ★	**842**
			589-37
54HC356			
	Motorola	MC54HC356	589-32
	National	MM54HC356	589-27
	RCA	**CD54HC356** ★	**842**
			589-38
54HC365			
	Fairchild	54HC365	573-33
	Motorola	MC54HC365	573-42
	National	MM54HC365	573-48
	RCA	**CD54HC365** ★	**842**
			573-61
	SPI	**SP54HC365** ★	**848**
			573-69
	TI	SN54HC365	573-78
54HC366			
	Fairchild	54HC366	572-175
	Motorola	MC54HC366	573-1
	National	MM54HC366	573-5
	RCA	**CD54HC366** ★	**842**
			573-11
	TI	SN54HC366	573-23
54HC367			
	Fairchild	54HC367	573-34
	Motorola	MC54HC367	573-43
	National	MM54HC367	573-49
	RCA	**CD54HC367** ★	**842**
			573-62
54HC368			
	Fairchild	54HC368	572-176
	Motorola	MC54HC368	573-2
	National	MM54HC368	573-6
	RCA	**CD54HC368** ★	**842**
			573-12
	TI	SN54HC368	573-24
54HC373			
	Fairchild	54HC373	586-124
	Motorola	MC54HC373	586-137
	National	MM54HC373	586-143
	RCA	**CD54HC373** ★	**842**
			586-149
	SPI	**SP54HC373** ★	**848**
			586-157
54HC374			
	Fairchild	54HC374	581-67
	Motorola	MC54HC374	581-80
	National	MM54HC374	581-87
	RCA	**CD54HC374** ★	**842**
			581-95
	SPI	**SP54HC374** ★	**848**
			581-103
	TI	SN54HC374	581-124
54HC377			
	RCA	**CD54HC377** ★	**842**
			581-21
54HC384			
	RCA	**CD54HC384** ★	**843**
			571-145
54HC390			
	Fairchild	54HC390	577-49
	Motorola	MC54HC390	577-24
	National	MM54HC390	577-51
	RCA	**CD54HC390** ★	**843**
			577-54
	TI	SN54HC390	577-45
54HC393			
	Fairchild	54HC393	575-26
	Motorola	MC54HC393	575-6
	National	MM54HC393	575-28
	RCA	**CD54HC393** ★	**843**
			575-31
	SPI	**SP54HC393** ★	**848**
			575-35
	TI	SN54HC393	575-23
54HC4002			
	Motorola	MC54HC4002	584-146
	National	MM54HC4002	584-151
	RCA	**CD54HC4002** ★	**843**
			584-161
54HC40102			
	RCA	**CD54HC40102** ★	**843**
			576-186
54HC40103			
	RCA	**CD54HC40103** ★	**843**
			575-78
54HC40104			
	RCA	**CD54HC40104** ★	**843**
			590-119
54HC40105			
	RCA	**CD54HC40105** ★	**843**
			587-87
54HC4015			
	RCA	**CD54HC4015** ★	**843**
			590-62
54HC4016			
	Motorola	MC54HC4016	2617-60
	RCA	**CD54HC4016** ★	**843**
54HC4017			
	Fairchild	54HC4017	576-13
	Motorola	MC54HC4017	576-20
	National	MM54HC4017	576-24
	RCA	**CD54HC4017** ★	**843**
			576-31
	SPI	**SP54HC4017** ★	**848**
			576-35
	TI	SN54HC4017	576-47
54HC4018			
	National	MM54HC4018	585-93
54HC4020			
	Fairchild	54HC4020	575-123
	Motorola	MC54HC4020	575-130
	National	MM54HC4020	575-134
	RCA	**CD54HC4020** ★	**843**
			575-140
	SPI	**SP54HC4020** ★	**848**
			575-144
54HC4024			
	Motorola	MC54HC4024	575-53
	RCA	**CD54HC4024** ★	**843**
			575-62
54HC4040			
	Fairchild	54HC4040	575-86
	Motorola	MC54HC4040	575-93
	National	MM54HC4040	575-97
	RCA	**CD54HC4040** ★	**843**
			575-105
54HC4046			
	Fairchild	54HC4046	589-71
	Motorola	MC54HC4046	592-90
	RCA	**CD54HC4046** ★	**843**
			592-98
54HC4047			
	Fairchild	54HC4047	589-72
54HC4049			
	Fairchild	54HC4049	572-85
	Motorola	MC54HC4049	572-92
	National	MM54HC4049	572-95
	RCA	**CD54HC4049** ★	**843**
			572-103
54HC4050			
	Fairchild	54HC4050	572-129
	Motorola	MC54HC4050	572-136
	National	MM54HC4050	572-140
	RCA	**CD54HC4050** ★	**843**
			572-148
54HC4051			
	Fairchild	54HC4051	595-17
	Motorola	MC54HC4051	2623-35
	RCA	**CD54HC4051** ★	**843**
54HC4052			
	Fairchild	54HC4052	593-37
	Motorola	MC54HC4052	2622-80
	RCA	**CD54HC4052** ★	**843**
54HC4053			
	Fairchild	54HC4053	593-42
	Motorola	MC54HC4053	2619-59
	RCA	**CD54HC4053** ★	**843**
54HC4060			
	Motorola	MC54HC4060	575-159
	National	MM54HC4060	575-163
	RCA	**CD54HC4060** ★	**843**
			575-169
	TI	SN54HC4060	575-181
54HC4066			
	Motorola	MC54HC4066	2617-29
	RCA	**CD54HC4066** ★	**843**
54HC4067			
	RCA	**CD54HC4067** ★	**843**
54HC4075			
	Motorola	MC54HC4075	584-51
	RCA	**CD54HC4075** ★	**843**
			584-61
	TI	SN54HC4075	584-73
54HC4078			
	Motorola	MC54HC4078	585-91
54HC4094			
	RCA	**CD54HC4094** ★	**843**
			591-55
54HC42	Fairchild	54HC42	578-25
	Motorola	MC54HC42	578-32
	National	MM54HC42	578-37
	RCA	**CD54HC42** ★	**842**
			578-46
	SPI	**SP54HC42** ★	**848**
			578-50
	TI	SN54HC42	578-62
54HC423			
	Motorola	MC54HC423	589-127
	RCA	**CD54HC423** ★	**843**
			589-142
	TI	SN54HC423	589-162
54HC4301			
	National	MM54HC4301	587-38
54HC4302			
	National	MM54HC4302	587-36

¶ Indicates page number in Application Note Directory.
★ Indicates addition data is provided on the page noted.

Base Number	Source	Device	Page-Line
54HC4303			
	National	MM54HC4303	581-19
54HC4304			
	National	MM54HC4304	581-17
54HC4305			
	National	MM54HC4305	573-93
54HC4316			
	Motorola	MC54HC4316	2617-61
54HC4335			
	Motorola	MC54HC4335	2619-60
54HC4351			
	Motorola	MC54HC4351	2623-36
54HC4352			
	Motorola	MC54HC4352	2622-81
54HC4510			
	Fairchild	54HC4510	577-9
54HC4511			
	Motorola	MC54HC4511	579-179
	National	MM54HC4511	580-3
	RCA	**CD54HC4511 ★**	**843**
			580-10
54HC4512			
	Fairchild	54HC4512	589-16
54HC4514			
	Fairchild	54HC4514	579-71
	Motorola	MC54HC4514	579-28
	National	MM54HC4514	579-34
	RCA	**CD54HC4514 ★**	**843**
			579-40
54HC4515			
	RCA	**CD54HC4515 ★**	**843**
			579-41
54HC4516			
	Fairchild	54HC4516	574-116
54HC4518			
	RCA	**CD54HC4518 ★**	**843**
			577-31
54HC4520			
	RCA	**CD54HC4520 ★**	**843**
			575-41
54HC4538			
	Fairchild	54HC4538	589-120
	Motorola	MC54HC4538	589-128
	RCA	**CD54HC4538 ★**	**843**
			589-143
54HC4543			
	Motorola	MC54HC4543	579-133
	National	MM54HC4543	580-4
	RCA	**CD54HC4543 ★**	**843**
			579-137
54HC4703			
	Fairchild	54HC4703	592-69
54HC51	Motorola	MC54HC51	584-12
	National	MM54HC51	584-14
54HC533			
	Fairchild	54HC533	586-188
	Motorola	MC54HC533	586-193
	National	MM54HC533	587-1
	RCA	**CD54HC533 ★**	**843**
			587-7
	SPI	**SP54HC533 ★**	**848**
			587-15
	TI	SN54HC533	587-27
54HC534			
	Fairchild	54HC534	581-27
	Motorola	MC54HC534	581-31
	National	MM54HC534	581-37
	RCA	**CD54HC534 ★**	**843**
			581-41
	TI	SN54HC534	581-60
54HC540			
	Motorola	MC54HC540	573-103
	RCA	**CD54HC540 ★**	**843**
			573-111
	SPI	**SP54HC540 ★**	**848**
			573-119
54HC541			
	Motorola	MC54HC541	573-104
	RCA	**CD54HC541 ★**	**843**
			573-112
	SPI	**SP54HC541 ★**	**848**
			573-120
54HC543			
	Fairchild	54HC543	594-168
54HC544			
	Fairchild	54HC544	594-169
54HC550			
	Fairchild	54HC550	594-174
			594-178
54HC551			
	Fairchild	54HC551	594-175
			594-179
54HC563			
	Fairchild	54HC563	586-189
	Motorola	MC54HC563	586-194
	National	MM54HC563	587-2
	RCA	**CD54HC563 ★**	**843**
			587-8
	TI	SN54HC563	587-28
54HC564			
	Fairchild	54HC564	581-28
	Motorola	MC54HC564	581-32
	National	MM54HC564	581-38
	RCA	**CD54HC564 ★**	**843**
			581-42
54HC568			
	Fairchild	54HC568	577-17
54HC569			
	Fairchild	54HC569	574-117
54HC573			
	Fairchild	54HC573	586-125
	Motorola	MC54HC573	586-138
	National	MM54HC573	586-144
	RCA	**CD54HC573 ★**	**843**
			586-150
	SPI	**SP54HC573 ★**	**848**
			586-158
	TI	SN54HC573	586-178
54HC574			
	Fairchild	54HC574	581-68
	Motorola	MC54HC574	581-81
	National	MM54HC574	581-88
	RCA	**CD54HC574 ★**	**843**
			581-96
	SPI	**SP54HC574 ★**	**848**
			581-104
	TI	SN54HC574	581-125
54HC58	Motorola	MC54HC58	583-190
	National	MM54HC58	583-192
54HC589			
	Motorola	MC54HC589	591-129
54HC595			
	Motorola	MC54HC595	591-120
	TI	SN54HC595	591-122
54HC597			
	Motorola	MC54HC597	591-92
	TI	SN54HC597	591-94
54HC640			
	Fairchild	54HC640	594-105
	Motorola	MC54HC640	594-108
	RCA	**CD54HC640 ★**	**843**
			594-116
54HC643			
	Fairchild	54HC643	594-102
	Motorola	MC54HC643	594-109
	RCA	**CD54HC643 ★**	**843**
			594-117
54HC645			
	Fairchild	54HC645	594-166
	TI	SN54HC645	594-159
54HC646			
	Fairchild	54HC646	594-88
	Motorola	MC54HC646	594-90
	National	MM54HC646	594-92
	RCA	**CD54HC646 ★**	**843**
			594-94
	TI	SN54HC646	594-100
54HC648			
	Fairchild	54HC648	594-74
			594-172
	Motorola	MC54HC648	594-76
	National	MM54HC648	594-78
	RCA	**CD54HC648 ★**	**843**
			594-80
	TI	SN54HC648	594-86
54HC670			
	RCA	**CD54HC670 ★**	**843**
			587-106
54HC688			
	Fairchild	54HC688	571-61
			571-139
	Motorola	MC54HC688	571-141
	National	MM54HC688	592-66
			(Continued)
54HC688			
	RCA	**CD54HC688 ★**	**843**
			571-65
	TI	SN54HC688	571-143
54HC73	Motorola	MC54HC73	581-169
	National	MM54HC73	581-175
	RCA	**CD54HC73 ★**	**842**
			581-182
	SPI	**SP54HC73 ★**	**848**
			581-190
	TI	SN54HC73	581-198
54HC74	Fairchild	54HC74	580-41
	Motorola	MC54HC74	580-48
	National	MM54HC74	580-53
	RCA	**CD54HC74 ★**	**842**
			580-63
	SPI	**SP54HC74 ★**	**848**
			580-68
	TI	SN54HC74	580-82
54HC75	Fairchild	54HC75	586-45
	Motorola	MC54HC75	586-52
	National	MM54HC75	586-56
	RCA	**CD54HC75 ★**	**842**
			586-63
	SPI	**SP54HC75 ★**	**848**
			586-67
	TI	SN54HC75	586-79
54HC76	Fairchild	54HC76	582-7
	Motorola	MC54HC76	582-16
	National	MM54HC76	582-23
	SPI	**SP54HC76 ★**	**848**
			582-39
	TI	SN54HC76	582-53
54HC77	National	MM54HC77	587-58
	SPI	**SP54HC77 ★**	**848**
			586-42
	TI	SN54HC77	586-38
54HC80	**SPI**	**SP54HC80 ★**	**848**
			571-72
54HC82	**SPI**	**SP54HC82 ★**	**848**
			571-29
54HC85	Fairchild	54HC85	571-102
	Motorola	MC54HC85	571-109
	National	MM54HC85	571-112
	RCA	**CD54HC85 ★**	**842**
			571-121
	TI	SN54HC85	571-134
54HC86	Fairchild	54HC86	585-111
	Motorola	MC54HC86	585-120
	National	MM54HC86	585-128
	RCA	**CD54HC86 ★**	**842**
			585-140
	SPI	**SP54HC86 ★**	**848**
			585-144
	TI	SN54HC86	585-164
54HC90	**SPI**	**SP54HC90 ★**	**848**
			576-52
54HC93	**SPI**	**SP54HC93 ★**	**848**
			575-45
54HC942			
	National	MM54HC942	3217-154
54HCT00			
	Motorola	MC54HCT00	583-77
	RCA	CD54HCT00	583-97
	Zytrex	ZX54HCT00	583-125
54HCT02			
	RCA	CD54HCT02	585-57
	Zytrex	ZX54HCT02	585-84
54HCT04			
	Fairchild	54HCT04	573-182
	Motorola	MC54HCT04	573-190
	RCA	CD54HCT04	574-9
	Zytrex	ZX54HCT04	574-36
54HCT05			
	Motorola	MC54HCT05	573-191
54HCT07			
	Fairchild	54HCT07	573-90
54HCT08			
	RCA	CD54HCT08	582-138
	Zytrex	ZX54HCT08	582-159
54HCT10			
	RCA	CD54HCT10	583-43
54HCT107			
	RCA	CD54HCT107	581-183
	Zytrex	ZX54HCT107	582-2
54HCT109			
	RCA	CD54HCT109	582-35
54HCT11			
	RCA	CD54HCT11	582-97
54HCT112			
	Zytrex	ZX54HCT112	581-166
54HCT113			
	Zytrex	ZX54HCT113	581-150
54HCT123			
	RCA	CD54HCT123	589-107
54HCT132			
	RCA	CD54HCT132	593-101
54HCT137			
	Supertex	54HCT137	579-10
54HCT138			
	Mitel	**MD54HCT138R ★**	**3048**
			578-149
	Motorola	MC54HCT138	578-154
	RCA	CD54HCT138	578-163
	Supertex	54HCT138	578-176
	Zytrex	ZX54HCT138	578-186
54HCT139			
	Mitel	**MD54HCT139R ★**	**3049**
			578-107
	RCA	CD54HCT139	578-118
	Supertex	54HCT139	578-127
	Zytrex	ZX54HCT139	578-137
54HCT14			
	RCA	CD54HCT14	593-141
54HCT147			
	RCA	CD54HCT147	579-95
54HCT151			
	RCA	CD54HCT151	588-173
54HCT153			
	RCA	CD54HCT153	588-78
54HCT154			
	RCA	CD54HCT154	579-82
54HCT157			
	RCA	CD54HCT157	588-91
	Zytrex	ZX54HCT157	588-102
54HCT158			
	RCA	CD54HCT158	588-108
	Zytrex	ZX54HCT158	588-121
54HCT160			
	RCA	CD54HCT160	576-113
	Zytrex	ZX54HCT160	576-129
54HCT161			
	RCA	CD54HCT161	574-97
	Zytrex	ZX54HCT161	574-113
54HCT162			
	RCA	CD54HCT162	576-72
	Zytrex	ZX54HCT162	576-90
54HCT163			
	RCA	CD54HCT163	574-61
	Zytrex	ZX54HCT163	574-77
54HCT164			
	RCA	CD54HCT164	591-105
	Zytrex	ZX54HCT164	591-115
54HCT165			
	RCA	CD54HCT165	591-77
	Zytrex	ZX54HCT165	591-90
54HCT173			
	RCA	CD54HCT173	580-106
54HCT174			
	RCA	CD54HCT174	580-170
54HCT175			
	RCA	CD54HCT175	580-142
54HCT190			
	RCA	CD54HCT190	577-14
54HCT191			
	RCA	CD54HCT191	574-148
54HCT192			
	RCA	CD54HCT192	576-157
54HCT193			
	RCA	CD54HCT193	574-149
54HCT194			
	RCA	CD54HCT194	590-107
54HCT195			
	RCA	CD54HCT195	590-138
54HCT20			
	RCA	CD54HCT20	582-193
54HCT210			
	Zytrex	ZX54HCT210	594-38
54HCT221			
	RCA	CD54HCT221	589-144
54HCT237			
	Supertex	54HCT237	579-11
54HCT238			
	Supertex	54HCT238	578-177
	Zytrex	ZX54HCT238	578-187

Arranged alphanumerically from left to right

© IC MASTER 1984

Base Number	Source	Device	Page-Line
54HCT239			
	Supertex	54HCT239	578-128
	Zytrex	ZX54HCT239	578-138
54HCT240			
	Mitel	**MD54HCT240 ★**	**3050**
			594-7
	Motorola	MC54HCT240	594-12
	RCA	CD54HCT240	594-21
	Supertex	54HCT240	594-32
	Zytrex	ZX54HCT240	594-39
54HCT241			
	Mitel	**MD54HCT241R ★**	**3051**
			594-45
	Motorola	MC54HCT241	594-50
	RCA	CD54HCT241	594-57
	Supertex	54HCT241	594-67
	Zytrex	ZX54HCT241	594-72
54HCT242			
	RCA	CD54HCT242	593-64
	Supertex	54HCT242	593-74
54HCT243			
	RCA	CD54HCT243	593-65
	Supertex	54HCT243	593-75
54HCT244			
	Mitel	**MD54HCT244R ★**	**3052**
			593-161
	Motorola	MC54HCT244	593-166
	RCA	CD54HCT244	593-175
	Supertex	54HCT244	593-185
	Zytrex	ZX54HCT244	594-2
54HCT245			
	Mitel	**MD54HCT245R ★**	**3053**
			594-135
	Motorola	MC54HCT245	594-140
	RCA	CD54HCT245	594-145
	Supertex	54HCT245	594-155
	Zytrex	ZX54HCT245	594-164
54HCT251			
	RCA	CD54HCT251	589-39
54HCT253			
	RCA	CD54HCT253	588-70
54HCT257			
	RCA	CD54HCT257	588-132
	Zytrex	ZX54HCT257	588-142
54HCT258			
	Zytrex	ZX54HCT258	588-147
54HCT259			
	RCA	CD54HCT259	587-66
	Zytrex	ZX54HCT259	587-82
54HCT27			
	RCA	CD54HCT27	585-9
54HCT273			
	RCA	CD54HCT273	581-4
	Zytrex	ZX54HCT273	581-15
54HCT280			
	RCA	CD54HCT280	571-186
54HCT297			
	RCA	CD54HCT297	592-72
			592-113
			3214-44
54HCT299			
	RCA	CD54HCT299	591-154
54HCT32			
	RCA	CD54HCT32	584-97
	Zytrex	ZX54HCT32	584-118
54HCT34			
	Motorola	MC54HCT34	573-192
54HCT354			
	RCA	CD54HCT354	589-40
54HCT356			
	RCA	CD54HCT356	589-41
54HCT365			
	RCA	CD54HCT365	573-63
	Zytrex	ZX54HCT365	573-85
54HCT366			
	RCA	CD54HCT366	573-13
	Zytrex	ZX54HCT366	573-29
54HCT367			
	RCA	CD54HCT367	573-64
	Zytrex	ZX54HCT367	573-86
54HCT368			
	RCA	CD54HCT368	573-14
	Zytrex	ZX54HCT368	573-30
54HCT373			
	Mitel	**MD54HCT373R ★**	**3054**
			586-130
	Motorola	MC54HCT373	586-139
	RCA	CD54HCT373	586-151
			(Continued)

Base Number	Source	Device	Page-Line
54HCT373			
	Supertex	54HCT373	586-172
	Zytrex	ZX54HCT373	586-184
54HCT374			
	Mitel	**MD54HCT374R ★**	**3055**
			581-72
	Motorola	MC54HCT374	581-82
	RCA	CD54HCT374	581-97
	Supertex	54HCT374	581-118
	Zytrex	ZX54HCT374	581-132
54HCT377			
	RCA	CD54HCT377	581-22
54HCT384			
	RCA	CD54HCT384	571-146
54HCT390			
	RCA	CD54HCT390	577-55
54HCT393			
	RCA	CD54HCT393	575-32
54HCT4002			
	RCA	CD54HCT4002	584-162
54HCT40102			
	RCA	CD54HCT40102	
			576-187
54HCT40103			
	RCA	CD54HCT40103	
			575-79
54HCT40104			
	RCA	CD54HCT40104	
			590-120
54HCT40105			
	RCA	CD54HCT40105	
			587-88
54HCT4015			
	RCA	CD54HCT4015	590-63
54HCT4017			
	RCA	CD54HCT4017	576-32
54HCT4020			
	RCA	CD54HCT4020	575-141
54HCT4024			
	RCA	CD54HCT4024	575-63
54HCT4040			
	RCA	CD54HCT4040	575-106
54HCT4046			
	RCA	CD54HCT4046	592-99
54HCT4060			
	RCA	CD54HCT4060	575-170
54HCT4075			
	RCA	CD54HCT4075	584-62
54HCT42			
	RCA	CD54HCT42	578-47
54HCT423			
	RCA	CD54HCT423	589-145
54HCT4511			
	RCA	CD54HCT4511	580-11
54HCT4514			
	RCA	CD54HCT4514	579-42
54HCT4515			
	RCA	CD54HCT4515	579-43
54HCT4518			
	RCA	CD54HCT4518	577-32
54HCT4520			
	RCA	CD54HCT4520	575-42
54HCT4538			
	RCA	CD54HCT4538	589-146
54HCT4543			
	RCA	CD54HCT4543	579-138
54HCT533			
	Motorola	MC54HCT533	586-195
	RCA	CD54HCT533	587-9
	Supertex	54HCT533	587-21
	Zytrex	ZX54HCT533	587-32
54HCT534			
	Motorola	MC54HCT534	581-33
	RCA	CD54HCT534	581-43
	Supertex	54HCT534	581-54
	Zytrex	ZX54HCT534	581-63
54HCT540			
	Mitel	**MD54HCT540R ★**	**3056**
			573-95
	Motorola	MC54HCT540	573-105
	RCA	CD54HCT540	573-113
	Zytrex	ZX54HCT540	573-136
54HCT541			
	Mitel	**MD54HCT541R ★**	**3057**
			573-96
	Motorola	MC54HCT541	573-106
	RCA	CD54HCT541	573-114
			(Continued)

Base Number	Source	Device	Page-Line
54HCT541			
	Supertex	54HCT541	573-131
	Zytrex	ZX54HCT541	573-137
54HCT563			
	RCA	CD54HCT563	587-10
	Supertex	54HCT563	587-22
	Zytrex	ZX54HCT563	587-33
54HCT564			
	RCA	CD54HCT564	581-44
	Supertex	54HCT564	581-55
	Zytrex	ZX54HCT564	581-64
54HCT573			
	Mitel	**MD54HCT573R ★**	**3058**
			586-131
	RCA	CD54HCT573	586-152
	Supertex	54HCT573	586-173
	Zytrex	ZX54HCT573	586-185
54HCT574			
	Mitel	**MD54HCT574R ★**	**3059**
			581-73
	RCA	CD54HCT574	581-98
	Supertex	54HCT574	581-119
	Zytrex	ZX54HCT574	581-133
54HCT640			
	Motorola	MC54HCT640	594-112
	RCA	CD54HCT640	594-118
	Zytrex	ZX54HCT640	594-128
54HCT643			
	Motorola	MC54HCT643	594-113
	RCA	CD54HCT643	594-119
	Zytrex	ZX54HCT643	594-129
54HCT646			
	RCA	CD54HCT646	594-95
54HCT648			
	RCA	CD54HCT648	594-81
54HCT670			
	RCA	CD54HCT670	587-107
54HCT688			
	Motorola	MC54HCT688	571-63
	RCA	CD54HCT688	571-66
54HCT73			
	RCA	CD54HCT73	581-184
	Zytrex	ZX54HCT73	582-3
54HCT74			
	RCA	CD54HCT74	580-64
	Zytrex	ZX54HCT74	580-87
54HCT75			
	RCA	CD54HCT75	586-64
54HCT76			
	Zytrex	ZX54HCT76	582-62
54HCT85			
	RCA	CD54HCT85	571-122
54HCT86			
	RCA	CD54HCT86	585-141
54HCU04			
	Motorola	MC54HCU04	573-168
	National	MM54HCU04	573-170
	RCA	CD54HCU04	574-10
54L00	**TI**	**SN54L00 ★**	**920**
			621-189
54L02	**TI**	**SN54L02 ★**	**920**
			624-81
54L03	**TI**	**SN54L03 ★**	**921**
			621-95
54L04	**TI**	**SN54L04 ★**	**921**
			607-55
54L10	**TI**	**SN54L10 ★**	**923**
			620-134
54L122	**TI**	**SN54L122 ★**	**961**
			630-127
54L123	TI	SN54L123	630-170
54L153	**TI**	**SN54L153 ★**	**972**
			628-51
54L154	**TI**	**SN54L154 ★**	**973**
54L157	**TI**	**SN54L157 ★**	**975**
			629-30
54L164	National	DM54L164A	3790-77
	TI	SN54L164	3790-79
54L192	**TI**	**SN54L192 ★**	**990**
			611-54
54L193	**TI**	**SN54L193 ★**	**990**
			609-102
54L20	**TI**	**SN54L20 ★**	**926**
			620-70
54L30	**TI**	**SN54L30 ★**	**929**
			622-40

Base Number	Source	Device	Page-Line
54L42	**TI**	**SN54L42 ★**	**933**
			612-91
54L43	**TI**	**SN54L43 ★**	**934**
			612-17
54L44	**TI**	**SN54L44 ★**	**934**
			612-10
54L46	TI	SN54L46	596-148
54L47	**TI**	**SN54L47 ★**	**934**
			596-130
54L51	**TI**	**SN54L51 ★**	**936**
			622-125
54L54	**TI**	**SN54L54 ★**	**938**
			623-27
54L55	**TI**	**SN54L55 ★**	**939**
			622-170
54L71	**TI**	**SN54L71 ★**	**943**
			617-32
54L72	**TI**	**SN54L72, ★**	**944**
			617-20
54L73	**TI**	**SN54L73 ★**	**944**
			617-129
54L74	**TI**	**SN54L74 ★**	**945**
			615-11
54L75	**TI**	**SN54L75 ★**	**946**
			625-93
54L77	**TI**	**SN54L77 ★**	**947**
54L78	**TI**	**SN54L78 ★**	**947**
			617-86
54L85	**TI**	**SN54L85 ★**	**950**
			603-73
54L86	**TI**	**SN54L86 ★**	**950**
			624-177
54L90	**TI**	**SN54L90 ★**	**952**
			609-142
54L91	National	DM54L91	3790-111
	TI	**SN54L91 ★**	**952**
			3790-109
54L93	**TI**	**SN54L93 ★**	**953**
			608-120
54L95	National	DM54L95	3788-46
	TI	**SN54L95 ★**	**954**
			631-97
	TI	SN54L95	3788-90
54L96	**TI**	**SN54L96 ★**	**954**
			632-10
54L98	**TI**	**SN54L98 ★**	**955**
			631-30
~~54L99~~	~~**TI**~~	~~**SN54L99 ★**~~	~~**955**~~
			3788-91
54LS00	Fairchild	54LS00	621-190
	Motorola	**SN54LS00 ★**	**822**
			621-194
	National	DM54LS00	621-196
	SGS	54LS00	622-2
	Signetics	**54LS00 ★**	**529**
			622-4
	TI	**SN54LS00 ★**	**920**
			622-6
54LS01	**Motorola**	**SN54LS01 ★**	**822**
			621-121
	National	DM54LS01	621-125
	Signetics	54LS01	621-133
	TI	**SN54LS01 ★**	**920**
			621-136
54LS02	Fairchild	54LS02	624-82
	Motorola	**SN54LS02 ★**	**822**
			624-88
	National	DM54LS02	624-92
	SGS	54LS02	624-96
	Signetics	**54LS02 ★**	**529**
			624-100
	TI	**SN54LS02 ★**	**920**
			624-103
54LS03	Fairchild	54LS03	621-116
	Motorola	**SN54LS03 ★**	**822**
			621-122
	National	DM54LS03	621-126
	SGS	54LS03	621-131
	Signetics	54LS03	621-134
	TI	**SN54LS03 ★**	**921**
			621-137
54LS04	Fairchild	54LS04	607-81
	Motorola	**SN54LS04 ★**	**822**
			607-85
	National	DM54LS04	607-87
	SGS	54LS04	607-90
			(Continued)

¶ Indicates page number in Application Note Directory.
★ Indicates addition data is provided on the page noted.

Base Number	Source	Device	Page-Line
54LS04	**Signetics**	**54LS04**	★ **529**
			607-92
	TI	**SN54LS04**	★ **921**
			607-94
54LS05	Fairchild	54LS05	606-142
	Motorola	**SN54LS05**	★ **822**
			606-146
	National	DM54LS05	606-148
	SGS	54LS05	606-151
	Signetics	54LS05	606-153
	TI	**SN54LS05**	★ **921**
			606-155
54LS08	Fairchild	54LS08	619-119
	Motorola	**SN54LS08**	★ **822**
			619-123
	National	DM54LS08	619-125
	SGS	54LS08	619-128
	Signetics	**54LS08**	★ **529**
			619-130
	TI	**SN54LS08**	★ **922**
			619-132
54LS09	Fairchild	54LS09	619-59
	Motorola	**SN54LS09**	★ **822**
			619-63
	National	DM54LS09	619-65
	SGS	54LS09	619-69
	Signetics	54LS09	619-71
	TI	**SN54LS09**	★ **923**
			619-73
54LS10	Fairchild	54LS10	620-154
	Motorola	**SN54LS10**	★ **822**
			620-158
	National	DM54LS10	620-160
	SGS	54LS10	620-163
	Signetics	**54LS10**	★ **529**
			620-165
	TI	**SN54LS10**	★ **923**
			620-167
54LS104			
	TI	SN54LS104	636-142
54LS105			
	TI	SN54LS105	636-143
54LS107			
	Motorola	SN54LS107A	617-135
	National	DM54LS107A	617-139
	Signetics	**54LS107**	★ **529**
			617-145
	TI	**SN54LS107A**	★ **957**
			617-149
54LS109			
	Fairchild	54LS109	617-64
	Motorola	SN54LS109A	617-68
	National	DM54LS109	617-70
	SGS	54LS109	617-73
	Signetics	54LS109	617-75
	TI	**SN54LS109A**	★ **958**
			617-77
54LS11	Fairchild	54LS11	619-19
	Motorola	**SN54LS11**	★ **822**
			619-22
	National	DM54LS11	619-24
	SGS	54LS11	619-27
	Signetics	54LS11	619-29
	TI	**SN54LS11**	★ **923**
			619-31
54LS112			
	Fairchild	54LS112	618-58
	Motorola	SN54LS112A	618-62
	National	DM54LS112	618-64
	SGS	54LS112	618-98
	Signetics	54LS112	618-67
	TI	**SN54LS112A**	★ **959**
			618-69
54LS113			
	Fairchild	54LS113	618-13
	Motorola	SN54LS113A	618-17
	National	DM54LS113A	618-19
	SGS	54LS113	618-22
	Signetics	54LS113	618-24
	TI	SN54LS113A	618-26
54LS114			
	Fairchild	54LS114	618-89
	Motorola	SN54LS114A	618-93
	National	DM54LS114A	618-95
	SGS	T54LS114	618-100
			(Continued)

Base Number	Source	Device	Page-Line
54LS114			
	TI	**SN54LS114A**	★ **960**
			618-102
54LS12	Fairchild	54LS12	620-108
	Motorola	SN54LS12	620-112
	National	DM54LS12	620-114
	TI	**SN54LS12**	★ **924**
			620-117
54LS122			
	Fairchild	54LS122	630-128
	Motorola	SN54LS122	630-130
	National	DM54LS122	630-132
	TI	**SN54LS122**	★ **961**
			630-134
54LS123			
	Fairchild	54LS123	630-171
	Motorola	SN54LS123	630-173
	National	DM54LS123	630-175
	TI	**SN54LS123**	★ **962**
			630-178
			¶ 259-9
54LS125			
	Fairchild	54LS125A	605-174
	Motorola	SN54LS125A	606-3
	National	DM54LS125A	606-5
	SGS	54LS125A	606-8
	Signetics	54LS125A	606-10
	TI	**SN54LS125A**	★ **962**
			606-12
54LS126			
	Fairchild	54LS126	605-148
	Motorola	SN54LS126A	605-151
	National	DM54LS126	605-153
	SGS	54LS126	605-155
	Signetics	54LS126A	605-157
	TI	**SN54LS126A**	★ **962**
			605-159
54LS13	Fairchild	54LS13	637-141
	Motorola	SN54LS13	637-145
	National	DM54LS13	637-147
	SGS	T54LS13	637-152
	Signetics	54LS13	637-154
	TI	**SN54LS13**	★ **924**
			637-156
54LS132			
	Fairchild	54LS132	638-30
	Motorola	SN54LS132	638-34
	National	DM54LS132	638-36
	SGS	54LS132	637-150
	Signetics	**54LS132**	★ **529**
			638-39
		54LS132A	★ **529**
			638-40
	TI	**SN54LS132**	★ **965**
			638-42
54LS133			
	Fairchild	54LS133	622-73
	Motorola	SN54LS133	622-76
	SGS	54LS133	622-78
54LS136			
	Fairchild	54LS136	624-134
	Motorola	SN54LS136	624-138
	National	DM54LS136	624-140
	SGS	54LS136	624-143
	Signetics	54LS136	624-145
	TI	**SN54LS136**	★ **966**
			624-147
54LS137			
	Motorola	SN54LS137	613-94
	TI	**SN54LS137**	★ **967**
			613-96
54LS138			
	Fairchild	54LS138	613-57
	Motorola	SN54LS138	613-61
	National	DM54LS138	613-63
	SGS	54LS138	613-66
	Signetics	**54LS138**	★ **529**
			613-68
	TI	**SN54LS138**	★ **968**
			613-70
54LS139			
	Fairchild	54LS139	612-138
	Motorola	SN54LS139	612-141
	National	DM54LS139	612-143
	SGS	54LS139	612-146
	Signetics	**54LS139**	★ **529**
			612-148
			(Continued)

Base Number	Source	Device	Page-Line
54LS139			
	TI	**SN54LS139**	★ **968**
			612-150
54LS14	Fairchild	54LS14	638-65
	Motorola	SN54LS14	638-69
	National	DM54LS14	638-71
	SGS	54LS14	638-74
	Signetics	**54LS14**	★ **529**
			638-76
	TI	**SN54LS14**	★ **924**
			638-78
54LS145			
	Motorola	SN54LS145	612-61
	TI	**SN54LS145**	★ **970**
			612-64
54LS147			
	Motorola	SN54LS147	639-119
	TI	**SN54LS147**	★ **970**
			639-121
54LS148			
	Motorola	SN54LS148	639-50
	TI	**SN54LS148**	★ **971**
			639-54
54LS15	Fairchild	54LS15	618-154
	Motorola	SN54LS15	618-158
	National	DM54LS15	618-160
	SGS	54LS15	618-164
	TI	**SN54LS15**	★ **925**
			618-166
54LS151			
	Fairchild	54LS151	629-168
	Motorola	SN54LS151	629-172
	National	DM54LS151	629-174
	SGS	54LS151	629-177
	Signetics	54LS151	629-179
	TI	**SN54LS151**	★ **972**
			629-181
54LS152			
	Fairchild	54LS152	630-13
	Motorola	SN54LS152	630-15
	TI	**SN54LS152A**	★ **972**
			630-17
54LS153			
	Fairchild	54LS153	628-52
	Motorola	SN54LS153	628-56
	National	DM54LS153	628-58
	SGS	54LS153	628-61
	Signetics	**54LS153**	★ **529**
			628-63
	TI	**SN54LS153**	★ **972**
			628-65
54LS154			
	National	DM54LS154	613-125
	Signetics	**54LS154**	★ **529**
			613-127
54LS155			
	Fairchild	54LS155	613-21
	Motorola	SN54LS155	613-24
	National	DM54LS155	613-26
	SGS	54LS155	613-29
	Signetics	54LS155	613-31
	TI	**SN54LS155**	★ **974**
			613-33
54LS156			
	Fairchild	54LS156	612-173
	Motorola	SN54LS156	612-176
	National	DM54LS156	612-178
	SGS	54LS156	612-181
	Signetics	54LS156	612-183
	TI	**SN54LS156**	★ **974**
			613-2
54LS157			
	Fairchild	54LS157	629-31
	Motorola	SN54LS157	629-35
	National	DM54LS157	629-37
	SGS	54LS157	629-40
	Signetics	**54LS157**	★ **529**
			629-42
	TI	**SN54LS157**	★ **975**
			629-44
54LS158			
	Fairchild	54LS158	628-139
	Motorola	SN54LS158	628-143
	National	DM54LS158	628-145
	SGS	54LS158	628-148
	Signetics	54LS158	628-150
			(Continued)

Base Number	Source	Device	Page-Line
54LS158			
	TI	**SN54LS158**	★ **975**
			628-152
54LS160			
	Fairchild	54LS160A	610-53
	Motorola	SN54LS160A	610-56
	National	DM54LS160A	610-58
	SGS	54LS160	610-61
	Signetics	54LS160A	610-63
	TI	**SN54LS160A**	★ **977**
			610-65
54LS161			
	Fairchild	54LS161	608-21
	Motorola	SN54LS161A	608-24
	National	DM54LS161A	608-26
	SGS	54LS161	608-29
	Signetics	**54LS161A**	★ **529**
			608-31
	TI	**SN54LS161A**	★ **977**
			608-33
54LS162			
	Fairchild	54LS162A	610-101
	Motorola	SN54LS162A	610-104
	National	DM54LS162	610-106
	SGS	54LS162	610-109
	Signetics	54LS162A	610-111
	TI	**SN54LS162A**	★ **978**
			610-113
54LS163			
	Fairchild	54LS163A	608-66
	Motorola	SN54LS163A	608-70
	National	DM54LS163A	608-72
	Signetics	**54LS163A**	★ **529**
			608-76
	TI	**SN54LS163A**	★ **978**
54LS164			
	Fairchild	54LS164	632-40
			3790-82
	Motorola	SN54LS164	632-44
			3790-89
	National	DM54LS164	632-46
			3790-92
	SGS	54LS164	632-49
	Signetics	**54LS164**	★ **529**
			632-51
	Signetics	54LS164	3790-98
	Signetics	**54LS164B**	★ **529**
			632-52
	TI	**SN54LS164**	★ **979**
			632-54
	TI	SN54LS164	3790-102
54LS165			
	Fairchild	54LS165	632-88
			3790-37
	Motorola	SN54LS165	632-91
			3790-41
	TI	**SN54LS165**	★ **979**
			632-93
	TI	SN54LS165	3790-48
54LS166			
	Motorola	SN54LS166	632-109
	National	DM54LS166	632-111
	TI	**SN54LS166**	★ **979**
			632-113
	TI	SN54LS166	3790-49
54LS168			
	Fairchild	54LS168	611-8
	Motorola	SN54LS168	611-11
	National	DM54LS168A	611-15
	SGS	T54LS168	611-17
	Signetics	54LS168A	611-19
	TI	SN54LS168	611-22
54LS169			
	Fairchild	54LS169	609-8
	Motorola	SN54LS169	609-11
	National	DM54LS169A	609-13
	SGS	T54LS169	609-15
	Signetics	54LS169A	609-17
	TI	SN54LS169	609-19
		SN54LS169A	609-20
54LS170			
	Fairchild	54LS170	627-14
			3770-24
	National	DM54LS170	627-19
			3770-32
	SGS	54LS170	627-22
	Signetics	54LS170	3770-36
			(Continued)

Arranged alphanumerically from left to right.

© IC MASTER 1984

Base Number	Source	Device	Page-Line
54LS170			
	TI	**SN54LS170**	★ **981**
			627-25
	TI	SN54LS170	3770-39
54LS171			
	TI	**SN54LS171**	★ **981**
			615-94
54LS173			
	Fairchild	54LS173A	615-134
	Motorola	SN54LS173A	615-136
	National	DM54LS173	615-138
	Signetics	54LS173	615-141
	TI	**SN54LS173A**	★ **982**
			615-143
54LS174			
	Fairchild	54LS174	615-170
	Motorola	SN54LS174	615-174
	National	DM54LS174	615-176
	SGS	54LS174	615-179
	Signetics	**54LS174**	★ **529**
			615-181
	TI	**SN54LS174**	★ **983**
			615-183
54LS175			
	Fairchild	54LS175	615-57
	Motorola	SN54LS175	615-61
	National	DM54LS175	615-63
	SGS	54LS175	615-66
	Signetics	**54LS175**	★ **529**
			615-68
	TI	**SN54LS175**	★ **983**
			615-70
54LS18	**TI**	**SN54LS18**	★ **926**
			637-157
54LS181			
	Fairchild	54LS181	604-47
	Motorola	SN54LS181	604-50
	SGS	54LS181	604-52
	Signetics	54LS181	604-54
	TI	**SN54LS181**	★ **985**
			604-56
54LS182			
	Motorola	SN54LS182	604-95
54LS183			
	Motorola	SN54LS183	603-175
	TI	**SN54LS183**	★ **986**
			604-2
54LS189			
	Fairchild	54LS189	3771-12
	TI	**SN54LS189A**	★ **988**
			3771-30
54LS19	**TI**	**SN54LS19**	★ **926**
			638-79
54LS190			
	Fairchild	54LS190	611-92
	Motorola	SN54LS190	611-95
	National	DM54LS190	611-97
	SGS	54LS190	611-100
	Signetics	**54LS190**	★ **529**
			611-102
	TI	**SN54LS190**	★ **989**
			611-103
54LS191			
	Fairchild	54LS191	609-56
	Motorola	SN54LS191	609-59
	National	DM54LS191	609-61
	SGS	54LS191	609-64
	Signetics	**54LS191**	★ **529**
			609-66
	TI	**SN54LS191**	★ **989**
			609-68
54LS192			
	Fairchild	54LS192	611-57
	Motorola	SN54LS192	611-60
	National	DM54LS192	611-62
	SGS	54LS192	611-65
	Signetics	**54LS192**	★ **530**
			611-67
	TI	**SN54LS192**	★ **990**
			611-69
54LS193			
	Fairchild	54LS193	609-103
	Motorola	SN54LS193	609-106
	National	DM54LS193	609-108
	SGS	54LS193	609-111
	Signetics	**54LS193**	★ **530**
			609-113
			(Continued)

Base Number	Source	Device	Page-Line
54LS193			
	TI	**SN54LS193**	★ **990**
			609-115
54LS194			
	Fairchild	54LS194A	631-169
			3788-101
	Motorola	SN54LS194A	631-172
			3788-117
	National	DM54LS194A	631-174
	Signetics	**54LS194A**	★ **530**
			631-177
	TI	**SN54LS194A**	★ **990**
			631-179
	TI	SN54LS194A	3788-92
54LS195			
	Fairchild	54LS195	631-61
		54LS195A	3788-102
	Motorola	SN54LS195A	631-65
			3788-118
	National	DM54LS195A	631-67
	Signetics	**54LS195A**	★ **530**
			3789-5
	TI	**SN54LS195A**	★ **991**
			631-71
	TI	SN54LS195A	3789-9
54LS196			
	Fairchild	54LS196	610-4
	Motorola	SN54LS196	610-6
	National	DM54LS196	610-8
	SGS	54LS196	610-11
	TI	**SN54LS196**	★ **991**
			610-13
54LS197			
	Fairchild	54LS197	607-148
	Motorola	SN54LS197	607-151
	National	DM54LS197	607-153
	SGS	54LS197	607-156
	Signetics	**54LS197**	★ **530**
			607-158
	TI	**SN54LS197**	★ **992**
			607-160
54LS20	Fairchild	54LS20	620-71
	Motorola	SN54LS20	620-75
	National	DM54LS20	620-77
	SGS	54LS20	620-80
	Signetics	**54LS20**	★ **529**
			620-82
	TI	**SN54LS20**	★ **926**
			620-84
54LS21	Fairchild	54LS21	618-133
	Motorola	SN54LS21	618-137
	National	DM54LS21	618-139
	SGS	54LS21	618-142
	Signetics	54LS21	618-144
	TI	**SN54LS21**	★ **927**
			618-146
54LS210			
	MMI	**SN54LS210**	★ **804**
			633-166
54LS211			
	TI	SN54LS211	3771-53
54LS212			
	TI	SN54LS212	3771-54
54LS213			
	TI	SN54LS213	3771-57
54LS216			
	TI	SN54LS216	3771-89
54LS217			
	TI	SN54LS217	3771-90
54LS218			
	TI	SN54LS218	3771-62
54LS219			
	TI	**SN54LS219A**	★ **994**
			3771-31
54LS22	Fairchild	54LS22	620-16
	Motorola	SN54LS22	620-20
	National	DM54LS22	620-22
	SGS	54LS22	620-25
	TI	**SN54LS22**	★ **927**
			620-27
54LS221			
	Fairchild	54LS221	630-145
	Motorola	SN54LS221	630-147
	National	DM54LS221	630-149
	Signetics	54LS221	630-151
	TI	**SN54LS221**	★ **994**
			630-152

Base Number	Source	Device	Page-Line
54LS222			
	TI	**SN54LS222**	★ **995**
			3757-6
54LS224			
	TI	**SN54LS224**	★ **995**
			3757-7
54LS227			
	TI	**SN54LS227**	★ **997**
			3757-10
54LS228			
	TI	**SN54LS228**	★ **997**
			3757-11
54LS24	**TI**	**SN54LS24**	★ **928**
			638-43
54LS240			
	Fairchild	54LS240	633-162
			2669-56
	MMI	**SN54LS240**	★ **804**
			633-167
	MMI	SN54LS240	2669-62
	Motorola	SN54LS240	633-172
			2669-67
	National	DM54LS240	633-176
	Signetics	**54LS240**	★ **530**
			634-5
	TI	SN54LS240	633-179
			2670-9
54LS241			
	Fairchild	54LS241	634-36
			2669-1
	MMI	**SN54LS241**	★ **804**
			634-41
	MMI	SN54LS241	2669-10
	Motorola	SN54LS241	634-47
			2669-24
	National	DM54LS241	634-51
	Signetics	**54LS241**	★ **530**
			634-55
	TI	SN54LS241	634-59
			2669-43
54LS242			
	Fairchild	54LS242	2675-24
	Motorola	SN54LS242	633-106
			2675-26
	National	DM54LS242	633-110
	TI	SN54LS242	633-118
			2675-30
54LS243			
	Fairchild	54LS243	2675-25
	Motorola	SN54LS243	633-107
			2675-27
	National	DM54LS243	633-111
	TI	SN54LS243	633-119
			2675-31
54LS244			
	Fairchild	54LS244	634-89
	MMI	**SN54LS244**	★ **804**
			634-93
	MMI	SN54LS244	2669-11
	Motorola	SN54LS244	634-97
			2669-25
	National	DM54LS244	634-52
	Signetics	**54LS244**	★ **530**
			634-99
	TI	SN54LS244	634-101
			2669-44
54LS245			
	Fairchild	54LS245	635-106
			2678-3
	MMI	**SN54LS245**	★ **804**
			635-111
	MMI	SN54LS245	2669-12
	Motorola	SN54LS245	635-116
			2678-4
	National	DM54LS245	635-120
	Signetics	**54LS245**	★ **530**
			635-123
	TI	SN54LS245	635-129
54LS247			
	Fairchild	54LS247	2661-154
	Motorola	SN54LS247	2661-165
	National	DM54LS247	2662-3
	TI	**SN54LS247**	★ **1001**
			2662-12
		SN54LS247A	★ **1001**
			2662-13

Base Number	Source	Device	Page-Line
54LS248			
	Fairchild	54LS248	2661-111
	Motorola	SN54LS248	2661-123
	National	DM54LS248	2661-128
	TI	**SN54LS248**	★ **1002**
			2661-137
54LS249			
	Fairchild	54LS249	2661-87
	Motorola	SN54LS249	2661-94
	National	DM54LS249	2661-98
	TI	**SN54LS249**	★ **1002**
			2661-104
54LS251			
	Fairchild	54LS251	630-47
	Motorola	SN54LS251	630-51
	National	DM54LS251	630-53
	SGS	54LS251	630-56
	Signetics	54LS251	630-65
		54LS251A	630-58
	TI	**SN54LS251**	★ **1003**
			630-60
	TI	SN54LS251	1349-142
54LS253			
	Fairchild	54LS253	628-3
	Motorola	SN54LS253	628-7
	National	DM54LS253	628-9
	SGS	54LS253	628-12
	Signetics	54LS253	628-14
	TI	**SN54LS253**	★ **1003**
			628-16
54LS256			
	Fairchild	54LS256	625-53
	Motorola	SN54LS256	625-56
	SGS	T54LS256	625-58
	Signetics	54LS256	628-111
54LS257			
	Fairchild	54LS257A	628-173
	Motorola	SN54LS257A	628-177
	National	DM54LS257B	628-179
	SGS	54LS257	628-182
	Signetics	**54LS257A**	★ **530**
			628-184
	TI	**SN54LS257A**	★ **1004**
			628-186
54LS258			
	Fairchild	54LS258A	628-100
	Motorola	SN54LS258A	628-104
	National	DM54LS258B	628-106
	SGS	54LS258	628-109
	Signetics	**54LS258A**	★ **530**
			628-112
	TI	**SN54LS258A**	★ **1005**
			628-114
54LS259			
	Fairchild	54LS259	626-26
	Motorola	SN54LS259	626-30
	National	DM54LS259	626-32
	SGS	54LS259	626-34
	Signetics	54LS259	626-36
	TI	**SN54LS259**	★ **1005**
			626-38
	TI	SN54LS259	1349-129
54LS26	Fairchild	54LS26	621-20
	Motorola	SN54LS26	621-23
	National	DM54LS26	621-25
	Signetics	54LS26	621-29
	TI	**SN54LS26**	★ **928**
			621-31
54LS260			
	Fairchild	54LS260	623-154
	Motorola	SN54LS260	623-156
	SGS	T54LS260	623-159
	Signetics	54LS260A	623-161
	TI	SN54LS260A	623-163
54LS261			
	Signetics	54LS261	604-116
	TI	**SN54LS261**	★ **1006**
			604-117
54LS266			
	Fairchild	54LS266	625-32
	Motorola	SN54LS266	625-36
	National	DM54LS266	625-38
	SGS	54LS266	625-41
	Signetics	**54LS266**	★ **530**
			625-43
	TI	**SN54LS266**	★ **1007**
			625-46

¶ Indicates page number in Application Note Directory.
★ Indicates addition data is provided on the page noted.

Base Number	Source	Device	Page-Line
54LS27	Fairchild	54LS27	624-6
	Motorola	SN54LS27	624-10
	National	DM54LS27	624-12
	SGS	54LS27	624-15
	Signetics	54LS27	624-17
	TI	**SN54LS27**	★ **929**
			624-19
54LS273			
	Fairchild	54LS273	616-72
	MMI	**SN54LS273**	★ **804**
			616-76
	Motorola	SN54LS273	616-78
	Signetics	**54LS273**	★ **530**
			616-81
	TI	**SN54LS273**	★ **1007**
			616-83
54LS275			
	TI	**SN54LS275**	★ **1008**
			605-122
54LS279			
	Fairchild	54LS279	625-137
	Motorola	SN54LS279	625-141
	National	DM54LS279	625-143
	SGS	54LS279	625-146
	Signetics	54LS279	625-148
	TI	**SN54LS279**	★ **1009**
			625-149
54LS28	Fairchild	54LS28	624-83
	Motorola	SN54LS28	624-89
	SGS	T54LS28	624-98
	Signetics	54LS28	624-101
	TI	**SN54LS28**	★ **929**
			624-104
54LS280			
	Motorola	SN54LS280	639-91
	TI	**SN54LS280**	★ **1009**
			639-93
54LS283			
	Fairchild	54LS283	605-90
	Motorola	SN54LS283	605-97
	National	DM54LS283	605-101
	SGS	54LS283	605-107
	Signetics	54LS283	605-111
	TI	**SN54LS283**	★ **1011**
			605-115
54LS289			
	Fairchild	54LS289	3771-10
	TI	**SN54LS289A**	★ **1012**
			3771-25
54LS290			
	Fairchild	54LS290	609-143
	Motorola	SN54LS290	609-147
	National	DM54LS290	609-151
	SGS	54LS290	609-157
	Signetics	**54LS290**	★ **530**
			609-161
	TI	**SN54LS290**	★ **1012**
			609-165
54LS292			
	TI	**SN54LS292**	★ **1013**
			612-2
54LS293			
	Fairchild	54LS293	608-121
	Motorola	SN54LS293	608-127
	National	DM54LS293	608-131
	SGS	54LS293	608-137
	Signetics	**54LS293**	★ **530**
			608-141
	TI	**SN54LS293**	★ **1014**
			608-145
54LS294			
	TI	SN54LS294	611-168
54LS295			
	Fairchild	54LS295A	3788-103
	Motorola	SN54LS295A	631-33
			3788-119
	SGS	54LS295A	631-35
	Signetics	**54LS295B**	★ **530**
			631-37
	TI	**SN54LS295B**	★ **1014**
			631-39
	TI	SN54LS295B	3789-10
54LS297			
	TI	**SN54LS297**	★ **1015**
			637-71
			¶ 258-13
	TI	SN54LS297	3214-32
54LS298			
	Fairchild	54LS298	629-83
	Motorola	SN54LS298	629-91
	National	DM54LS298	629-97
	SGS	54LS298	629-99
	Signetics	**54LS298**	★ **530**
			629-101
	TI	**SN54LS298**	★ **1015**
			629-103
54LS299			
	Fairchild	54LS299	632-183
			3790-4
	Motorola	SN54LS299	633-7
	TI	**SN54LS299**	★ **1016**
			633-11
	TI	SN54LS299	3790-8
54LS30	Fairchild	54LS30	622-41
	Motorola	SN54LS30	622-45
	National	DM54LS30	622-47
	SGS	54LS30	622-50
	Signetics	54LS30	622-52
	TI	**SN54LS30**	★ **929**
			622-54
54LS301			
	Signetics	54LS301	627-97
			3772-46
54LS31	**TI**	**SN54LS31**	★ **930**
			636-152
54LS310			
	MMI	**SN54LS310**	★ **804**
			634-42
54LS311			
	TI	SN54LS311	3771-49
54LS312			
	TI	SN54LS312	3771-50
54LS313			
	TI	SN54LS313	3770-69
54LS316			
	TI	SN54LS316	3771-65
54LS317			
	TI	SN54LS317	3771-86
54LS318			
	TI	SN54LS318	3771-60
54LS319			
	TI	**SN54LS319A**	★ **1017**
			3771-26
54LS32	Fairchild	54LS32	623-105
	Motorola	SN54LS32	623-109
	National	DM54LS32	623-111
	SGS	54LS32	623-114
	Signetics	**54LS32**	★ **529**
			623-116
	TI	**SN54LS32**	★ **930**
			623-118
54LS320			
	TI	**SN54LS320**	★ **1017**
			637-65
54LS321			
	TI	**SN54LS321**	★ **1017**
			637-66
54LS322			
	AMD	SN54LS322	605-130
	Fairchild	54LS322	605-132
	Motorola	SN54LS322	605-133
	TI	**SN54LS322A**	★ **1018**
			605-135
54LS323			
	AMD	SN54LS323	632-181
			3790-2
	Fairchild	54LS323	633-1
			3790-5
	Motorola	SN54LS323	633-8
	TI	**SN54LS323**	★ **1018**
			633-12
	TI	SN54LS323	3790-9
54LS324			
	TI	SN54LS324	3214-156
54LS325			
	TI	SN54LS325	637-108
			3215-32
54LS326			
	TI	SN54LS326	637-109
			3215-33
54LS327			
	TI	SN54LS327	637-110
			3215-34
54LS33	Fairchild	54LS33	624-29
	Motorola	SN54LS33	624-31
	SGS	T54LS33	624-34
	Signetics	54LS33	624-36
	TI	**SN54LS33**	★ **930**
			624-38
54LS340			
	MMI	**SN54LS340**	★ **804**
			633-168
	MMI	SN54LS340	2669-63
54LS341			
	MMI	**SN54LS341**	★ **804**
			634-43
	MMI	SN54LS341	2669-13
54LS344			
	MMI	**SN54LS344**	★ **804**
			634-94
	MMI	SN54LS344	2669-14
54LS347			
	Fairchild	54LS347	2661-143
	TI	**SN54LS347**	★ **1019**
			2661-149
54LS348			
	Motorola	SN54LS348	639-51
	TI	**SN54LS348**	★ **1019**
			639-55
54LS352			
	Fairchild	54LS352	627-150
	Motorola	SN54LS352	627-153
	National	DM54LS352	627-155
	SGS	T54LS352	627-157
	Signetics	54LS352	627-159
	TI	**SN54LS352**	★ **1020**
			627-161
54LS353			
	Fairchild	54LS353	627-116
	Motorola	SN54LS353	627-119
	National	DM54LS353	627-121
	SGS	T54LS353	627-123
	Signetics	54LS353	627-125
	TI	**SN54LS353**	★ **1021**
			627-127
54LS354			
	TI	**SN54LS354**	★ **1021**
			630-27
54LS355			
	TI	**SN54LS355**	★ **1022**
			630-23
54LS356			
	TI	**SN54LS356**	★ **1022**
			630-26
54LS357			
	TI	**SN54LS357**	★ **1023**
			630-24
54LS360			
	TI	SN54LS360	2679-20
54LS361			
	TI	SN54LS361	2679-19
54LS362			
	TI	SN54LS362	1349-136
54LS363			
	Signetics	**54LS363**	★ **530**
			626-79
54LS364			
	Signetics	**54LS364**	★ **530**
			616-32
54LS365			
	Fairchild	54LS365	606-52
	Motorola	SN54LS365A	606-60
	National	DM54LS365A	606-64
	SGS	54LS365	606-70
	Signetics	**54LS365A**	★ **530**
			606-74
	TI	**SN54LS365A**	★ **1023**
			606-78
	TI	SN54LS365A	2670-18
54LS366			
	Fairchild	54LS366	607-6
	Motorola	SN54LS366A	607-13
	National	DM54LS366A	607-17
	SGS	54LS366	607-23
	Signetics	54LS366A	607-27
	TI	**SN54LS366A**	★ **1023**
			607-31
	TI	SN54LS366A	2670-22
54LS367			
	Fairchild	54LS367	606-53
	Motorola	SN54LS367A	606-61
	National	DM54LS367A	606-65
	SGS	54LS367	606-71
	Signetics	**54LS367A**	★ **530**
			606-75
	TI	**SN54LS367A**	★ **1024**
			606-79
	TI	SN54LS367A	2670-19
54LS368			
	Fairchild	54LS368	607-7
	Motorola	SN54LS368A	607-14
	National	DM54LS368A	607-18
	SGS	54LS368	607-24
	Signetics	**54LS368A**	★ **530**
			607-28
	TI	**SN54LS368A**	★ **1024**
			607-32
	TI	SN54LS368A	2670-23
54LS37	Fairchild	54LS37	621-54
	Motorola	SN54LS37	621-58
	National	DM54LS37	621-60
	SGS	54LS37	621-63
	Signetics	**54LS37**	★ **529**
			621-65
	TI	**SN54LS37**	★ **932**
			621-67
54LS373			
	Fairchild	54LS373	626-66
	MMI	**SN54LS373**	★ **804**
			626-71
	Motorola	SN54LS373	626-73
	National	DM54LS373	626-75
	Signetics	**54LS373**	★ **530**
			626-80
	TI	**SN54LS373**	★ **1025**
			626-86
54LS374			
	Fairchild	54LS374	616-123
	MMI	**SN54LS374**	★ **804**
			616-128
	Motorola	SN54LS374	616-130
	National	DM54LS374	616-132
	Signetics	**54LS374**	★ **530**
			616-135
	TI	**SN54LS374**	★ **1026**
			616-137
54LS375			
	Fairchild	54LS375	625-94
	Motorola	SN54LS375	625-100
	Signetics	**54LS375**	★ **530**
			625-107
	TI	**SN54LS375**	★ **1026**
			625-111
54LS377			
	Fairchild	54LS377	616-154
	MMI	**SN54LS377**	★ **804**
			616-157
	Motorola	SN54LS377	616-159
	National	DM54LS377	625-121
	Signetics	**54LS377**	★ **530**
			616-162
	TI	**SN54LS377**	★ **1027**
			616-164
54LS378			
	AMD	SN54LS378	616-10
	Fairchild	54LS378	616-12
	Motorola	SN54LS378	616-14
	SGS	T54LS378	616-16
	Signetics	54LS378	616-18
	TI	**SN54LS378**	★ **1027**
			616-20
54LS379			
	AMD	SN54LS379	615-105
	Fairchild	54LS379	615-107
	Motorola	SN54LS379	615-109
	SGS	T54LS379	615-111
	TI	**SN54LS379**	★ **1028**
			615-113
54LS38	Fairchild	54LS38	621-3
	Motorola	SN54LS38	621-7
	National	DM54LS38	621-9
	SGS	54LS38	621-144
	Signetics	54LS38	621-12

(Continued)

Arranged alphanumerically from left to right.

© IC MASTER 1984

Base Number	Source	Device	Page-Line
54LS38	TI	**SN54LS38**	★ **932**
			621-14
54LS380			
	MMI	SN54LS380	632-157
54LS381			
	TI	**SN54LS381**	★ **1028**
			604-57
54LS382			
	TI	**SN54LS382**	★ **1029**
			604-58
54LS384			
	AMD	SN54LS384	605-17
	TI	**SN54LS384**	★ **1029**
			605-19
54LS385			
	AMD	SN54LS385	603-10
	Motorola	SN54LS385	603-12
	TI	**SN54LS385**	★ **1030**
			603-14
54LS386			
	Fairchild	54LS386	624-178
	Motorola	SN54LS386	624-186
	National	DM54LS386	624-190
	TI	**SN54LS386**	★ **1030**
			625-9
54LS388			
	AMD	SN54LS388	615-88
54LS390			
	Fairchild	54LS390	610-127
	Motorola	SN54LS390	610-133
	National	DM54LS390	610-137
	SGS	T54LS390	610-141
	Signetics	54LS390	610-145
	TI	**SN54LS390**	★ **1031**
			610-149
54LS393			
	Fairchild	54LS393	608-84
	Motorola	SN54LS393	608-88
	National	DM54LS393	608-90
	SGS	T54LS393	608-93
	Signetics	**54LS393**	★ **530**
			608-95
	TI	**SN54LS393**	★ **1031**
			608-97
54LS395			
	Fairchild	54LS395	3788-104
	Motorola	SN54LS395	3788-120
	SGS	T54LS395	631-135
			3789-3
	Signetics	**54LS395A**	★ **530**
			631-137
	TI	**SN54LS395A**	★ **1031**
			631-139
	TI	SN54LS395A	3789-11
54LS396			
	TI	**SN54LS396**	★ **1032**
			626-165
54LS398			
	Fairchild	54LS398	629-84
	Motorola	SN54LS398	629-92
	TI	**SN54LS398**	★ **1032**
			629-104
54LS399			
	AMD	SN54LS399	629-81
	Fairchild	54LS399	629-85
	Motorola	SN54LS399	629-93
	TI	**SN54LS399**	★ **1032**
			629-105
54LS40	Fairchild	54LS40	619-171
	Motorola	SN54LS40	619-175
	National	DM54LS40	619-177
	SGS	54LS40	619-180
	Signetics	54LS40	619-182
	TI	**SN54LS40**	★ **933**
			619-184
54LS42	Fairchild	54LS42	612-93
	Motorola	SN54LS42	612-96
	National	DM54LS42	612-98
	SGS	54LS42	612-101
	Signetics	**54LS42**	★ **529**
			612-103
	TI	**SN54LS42**	★ **933**
			612-105
54LS422			
	TI	**SN54LS422**	★ **1033**
			630-118
54LS423			
	TI	**SN54LS423**	★ **1033**
			630-154
54LS424			
	TI	SN54LS424	1345-93
54LS440			
	TI	**SN54LS440**	★ **1035**
			★ **1036**
			2675-7
54LS441			
	TI	**SN54LS441**	★ **1035**
			★ **1036**
			2675-8
54LS442			
	TI	**SN54LS442**	★ **1035**
			★ **1036**
			633-126
			★ **1035**
			★ **1036**
			2675-10
54LS443			
	TI	**SN54LS443**	★ **1035**
			★ **1036**
			633-127
			★ **1035**
			★ **1036**
			2675-11
54LS444			
	TI	**SN54LS444**	★ **1035**
			★ **1036**
			633-128
			★ **1035**
			★ **1036**
			2675-12
54LS445			
	Signetics	54LS445	612-35
	TI	**SN54LS445**	★ **1037**
			612-37
54LS446			
	TI	**SN54LS446**	★ **1038**
			2675-32
54LS447			
	Fairchild	54LS447	2661-144
	TI	**SN54LS447**	★ **1038**
			2661-150
54LS448			
	TI	**SN54LS448**	★ **1039**
			633-129
	TI	SN54LS448	2675-9
54LS449			
	TI	**SN54LS449**	★ **1039**
			2675-33
54LS450			
	MMI	SN54LS450	630-88
54LS451			
	MMI	SN54LS451	628-75
54LS453			
	MMI	SN54LS453	629-117
54LS46	TI	**SN54LS46**	★ **935**
			2662-30
54LS461			
	MMI	SN54LS461	608-153
54LS465			
	TI	**SN54LS465**	★ **1040**
			606-111
54LS466			
	TI	**SN54LS466**	★ **1040**
			607-114
54LS467			
	TI	**SN54LS467**	★ **1040**
			606-112
54LS468			
	TI	**SN54LS468**	★ **1040**
			607-115
54LS47	Fairchild	54LS47	2661-155
	Motorola	SN54LS47	2661-166
	National	DM54LS47	2662-4
	TI	**SN54LS47**	★ **935**
			2662-14
54LS471			
	National	**DM54LS471**	★ **4057**
			3761-15
54LS48	Fairchild	54LS48	2661-112
	Motorola	SN54LS48	2661-124
	National	DM54LS48	2661-129
	TI	**SN54LS48**	★ **935**
			2661-138
54LS49	Fairchild	54LS49	2661-88
	Motorola	SN54LS49	2661-95
	National	DM54LS49	2661-99
	TI	**SN54LS49**	★ **935**
			2661-105
54LS490			
	Fairchild	54LS490	610-128
	Motorola	SN54LS490	610-134
	SGS	T54LS490	610-142
	Signetics	**54LS490**	★ **530**
			610-146
	TI	**SN54LS490**	★ **1043**
			610-150
54LS491			
	MMI	SN54LS491	611-172
54LS498			
	MMI	SN54LS498	632-155
54LS503			
	Fairchild	54LS503	639-22
54LS51	Fairchild	54LS51	622-135
	Motorola	SN54LS51	622-138
	National	DM54LS51	622-140
	Signetics	54LS51	622-145
	TI	**SN54LS51**	★ **936**
			622-147
54LS533			
	Fairchild	54LS533	626-126
	MMI	**SN54LS533**	★ **804**
			626-130
54LS534			
	Fairchild	54LS534	616-54
	MMI	**SN54LS534**	★ **804**
			616-56
54LS54	Fairchild	54LS54	623-39
	Motorola	SN54LS54	623-42
	National	DM54LS54	623-44
	SGS	54LS54	623-47
	Signetics	54LS54	623-49
	TI	**SN54LS54**	★ **938**
			623-51
54LS540			
	Fairchild	54LS540	2669-57
	Motorola	SN54LS540	633-173
			2669-68
	Signetics	54LS540	2670-3
	TI	**SN54LS540**	★ **1050**
			633-180
	TI	SN54LS540	2670-10
54LS541			
	Fairchild	54LS541	2669-2
	Motorola	SN54LS541	634-48
			2669-26
	Signetics	54LS541	634-56
	TI	**SN54LS541**	★ **1050**
			634-60
	TI	SN54LS541	2669-45
54LS55	Fairchild	54LS55	622-171
	Motorola	SN54LS55	622-174
	National	DM54LS55	622-176
	SGS	54LS55	622-179
	TI	**SN54LS55**	★ **939**
			622-181
54LS56	TI	**SN54LS56**	★ **939**
			639-143
54LS568			
	Motorola	SN54LS568	611-29
54LS569			
	Motorola	SN54LS569	609-76
54LS57	TI	**SN54LS57**	★ **940**
			639-145
54LS590			
	TI	**SN54LS590**	★ **1056**
			608-159
54LS591			
	TI	**SN54LS591**	★ **1056**
			608-160
54LS592			
	TI	**SN54LS592**	★ **1057**
			608-155
54LS593			
	TI	**SN54LS593**	★ **1057**
			608-156
54LS594			
	TI	**SN54LS594**	★ **1058**
			632-127
54LS595			
	TI	**SN54LS595**	★ **1058**
			632-128
54LS596			
	TI	**SN54LS596**	★ **1058**
			632-129
54LS597			
	TI	**SN54LS597**	★ **1059**
			632-117
54LS598			
	TI	**SN54LS598**	★ **1059**
			632-118
54LS599			
	TI	**SN54LS599**	★ **1060**
			632-130
54LS600			
	TI	SN54LS600	636-162
		SN54LS600A	636-154
54LS601			
	TI	SN54LS601	636-163
		SN54LS601A	636-155
54LS602			
	TI	SN54LS602	636-164
		SN54LS602A	636-156
54LS603			
	TI	SN54LS603	636-165
		SN54LS603A	636-157
54LS604			
	Motorola	SN54LS604	625-175
	TI	**SN54LS604**	★ **1063**
			626-2
54LS605			
	Motorola	SN54LS605	625-176
	TI	**SN54LS605**	★ **1063**
			626-3
54LS606			
	Motorola	SN54LS606	625-177
	TI	**SN54LS606**	★ **1063**
			626-4
54LS607			
	Motorola	SN54LS607	625-178
	TI	**SN54LS607**	★ **1063**
			626-5
54LS608			
	TI	**SN54LS608**	★ **1064**
			626-6
54LS610			
	TI	**SN54LS610**	★ **1065**
			637-33
			¶ 264-15
54LS611			
	TI	**SN54LS611**	★ **1065**
			637-34
			¶ 264-15
54LS612			
	TI	**SN54LS612**	★ **1065**
			637-35
			¶ 264-15
54LS613			
	TI	**SN54LS613**	★ **1065**
			637-36
			¶ 264-15
54LS620			
	TI	**SN54LS620**	★ **1066**
			2677-38
54LS621			
	Motorola	SN54LS621	636-48
	TI	**SN54LS621**	★ **1066**
			2677-14
54LS622			
	Motorola	SN54LS622	636-49
	TI	**SN54LS622**	★ **1066**
			2677-15
54LS623			
	Motorola	SN54LS623	636-82
	Signetics	54LS623	636-85
	TI	**SN54LS623**	★ **1066**
			2677-39
54LS624			
	TI	**SN54LS624**	★ **1067**
			637-87
	TI	SN54LS624	3214-157
54LS625			
	TI	**SN54LS625**	★ **1067**
			637-115
	TI	SN54LS625	3215-35

¶ Indicates page number in Application Note Directory.
★ Indicates addition data is provided on the page noted.

Base Number	Source	Device	Page-Line
54LS626			
	TI	**SN54LS626**	**★1067**
			637-116
	TI	SN54LS626	3215-36
54LS627			
	TI	**SN54LS627**	**★1068**
			637-117
	TI	SN54LS627	3215-37
54LS628			
	TI	**SN54LS628**	**★1068**
			637-88
	TI	SN54LS628	3214-158
54LS629			
	TI	**SN54LS629**	**★1068**
			637-118
	TI	SN54LS629	3215-38
54LS63	**TI**	**SN54LS63**	**★941**
			638-50
54LS630			
	TI	**SN54LS630**	**★1069**
			2665-51
			¶ 319-4
54LS631			
	TI	**SN54LS631**	**★1069**
			2665-52
			¶ 319-4
54LS636			
	TI	**SN54LS636**	**★1072**
			★1153
			2665-53
54LS637			
	TI	**SN54LS637**	**★1072**
			★1153
			2665-54
54LS640			
	Motorola	SN54LS640	635-23
			2678-5
	TI	**SN54LS640**	**★1074**
			635-31
	TI	SN54LS640	2677-40
54LS641			
	Motorola	SN54LS641	635-61
			2677-66
	Signetics	54LS641	635-63
			2677-8
	TI	**SN54LS641**	**★1074**
			635-66
	TI	SN54LS641	2677-16
54LS642			
	Motorola	SN54LS642	634-151
			2677-67
	Signetics	54LS642	2677-9
	TI	**SN54LS642**	**★1074**
			634-155
	TI	SN54LS642	2677-17
54LS643			
	Motorola	SN54LS643	635-24
	TI	**SN54LS643**	**★1074**
			★1074
			★1075
			635-32
			★1074
			★1074
			★1075
			2677-41
54LS644			
	Motorola	SN54LS644	635-146
	TI	**SN54LS644**	**★1074**
			635-148
	TI	SN54LS644	2677-18
54LS645			
	MMI	**SN54LS645**	**★804**
			635-112
	MMI	SN54LS645	2677-25
	MMI	**SN54LS645-1**	**★804**
			2677-26
	Motorola	SN54LS645	635-117
			2678-6
	Signetics	54LS645	635-124
	TI	**SN54LS645**	**★1074**
			635-130
	TI	SN54LS645	2677-42
54LS646			
	TI	**SN54LS646**	**★1076**
			2678-7
54LS647			
	TI	**SN54LS647**	**★1076**
			2678-1
54LS648			
	TI	**SN54LS648**	**★1076**
			2678-8
54LS649			
	TI	**SN54LS649**	**★1076**
			2678-2
54LS651			
	TI	**SN54LS651**	**★1078**
			635-188
54LS652			
	TI	**SN54LS652**	**★1078**
			635-189
54LS653			
	TI	**SN54LS653**	**★1079**
			635-157
54LS654			
	TI	**SN54LS654**	**★1079**
			635-164
54LS668			
	Motorola	SN54LS668	611-12
	TI	**SN54LS668**	**★1080**
			611-23
54LS669			
	Motorola	SN54LS669	609-120
	TI	**SN54LS669**	**★1080**
			609-21
54LS670			
	Fairchild	54LS670	627-27
			3770-42
	Motorola	SN54LS670	627-31
			3770-46
	National	DM54LS670	627-33
			3770-48
	SGS	54LS670	627-35
	Signetics	**54LS670**	**★530**
			627-37
	Signetics	54LS670	3770-51
	TI	**SN54LS670**	**★1080**
			627-39
	TI	SN54LS670	3770-53
54LS671			
	TI	**SN54LS671**	**★1081**
			631-26
54LS672			
	TI	**SN54LS672**	**★1081**
			631-27
54LS673			
	Motorola	SN54LS673	633-57
	TI	**SN54LS673**	**★1082**
			633-59
54LS674			
	Motorola	SN54LS674	633-44
	TI	**SN54LS674**	**★1082**
			633-46
54LS68	**TI**	**SN54LS68**	**★942**
			611-153
54LS681			
	TI	**SN54LS681**	**★1085**
			605-40
54LS682			
	Motorola	SN54LS682	603-130
	TI	**SN54LS682**	**★1086**
			603-139
54LS683			
	Motorola	SN54LS683	603-110
	TI	**SN54LS683**	**★1086**
			603-118
54LS684			
	Motorola	SN54LS684	603-131
	TI	**SN54LS684**	**★1086**
			603-140
54LS685			
	Motorola	SN54LS685	603-111
	TI	**SN54LS685**	**★1086**
			603-119
54LS686			
	Motorola	SN54LS686	603-132
	TI	**SN54LS686**	**★1087**
			603-141
54LS687			
	Motorola	SN54LS687	603-112
	TI	**SN54LS687**	**★1087**
			603-120
54LS688			
	Motorola	SN54LS688	603-133
	TI	**SN54LS688**	**★1088**
			603-142
54LS689			
	Motorola	SN54LS689	603-113
	TI	**SN54LS689**	**★1088**
			603-121
54LS69	**TI**	**SN54LS69**	**★942**
			611-151
54LS690			
	TI	**SN54LS690**	**★1089**
			610-114
54LS691			
	TI	**SN54LS691**	**★1089**
			607-172
54LS692			
	TI	**SN54LS692**	**★1089**
			610-115
54LS693			
	TI	**SN54LS693**	**★1089**
			607-173
54LS696			
	TI	**SN54LS696**	**★1090**
			610-169
54LS697			
	TI	**SN54LS697**	**★1090**
			608-164
54LS698			
	TI	**SN54LS698**	**★1090**
			610-170
54LS699			
	TI	**SN54LS699**	**★1090**
			608-165
54LS716			
	Motorola	SN54LS716	611-147
54LS718			
	Motorola	SN54LS718	611-141
54LS73	Motorola	SN54LS73A	617-136
	National	DM54LS73A	617-140
	Signetics	**54LS73**	**★529**
			617-146
	TI	**SN54LS73A**	**★944**
			617-150
54LS74	Fairchild	54LS74	615-12
	Motorola	SN54LS74A	615-16
	National	DM54LS74	615-18
	SGS	54LS74	615-21
	Signetics	**54LS74A**	**★529**
			615-23
	TI	**SN54LS74A**	**★945**
			★946
			615-25
54LS75	Motorola	SN54LS75	625-101
	National	DM54LS75	625-104
	Signetics	**54LS75**	**★529**
			625-108
	TI	SN54LS75	625-112
54LS76	Motorola	SN54LS76A	617-174
	National	DM54LS76	617-176
	Signetics	54LS76	617-179
	TI	**SN54LS76A**	**★946**
			617-181
54LS77	Motorola	SN54LS77	625-119
	TI	**SN54LS77**	**★947**
			625-123
54LS78	Motorola	SN54LS78A	617-88
	National	DM54LS78	617-90
	TI	**SN54LS78A**	**★947**
			617-93
54LS795			
	Motorola	SN54LS795	606-99
54LS796			
	Motorola	SN54LS796	606-100
54LS797			
	Motorola	SN54LS797	606-101
54LS798			
	Motorola	SN54LS798	606-102
54LS83	Fairchild	54LS83	605-91
	Motorola	SN54LS83A	605-98
	National	DM54LS83A	605-102
	SGS	54LS83A	605-108
	Signetics	54LS83A	605-112
	TI	**SN54LS83A**	**★949**
			605-116
54LS848			
	Motorola	SN54LS848	639-63
54LS85	Fairchild	54LS85	603-42
	Motorola	SN54LS85	603-54
	National	DM54LS85	603-57
	SGS	54LS85	603-61
	Signetics	**54LS85**	**★529**
			603-64
	TI	**SN54LS85**	**★950**
			603-69
54LS86	Fairchild	54LS86	624-179
	Motorola	SN54LS86	624-187
	National	DM54LS86	625-1
	SGS	54LS86	625-5
	Signetics	**54LS86**	**★529**
			625-7
	TI	**SN54LS86**	**★950**
			625-10
54LS89	Fairchild	54LS89	3771-11
54LS90	Fairchild	54LS90	609-144
	Motorola	SN54LS90	609-148
	National	DM54LS90	609-152
	SGS	54LS90	609-158
	Signetics	**54LS90**	**★529**
			609-162
	TI	**SN54LS90**	**★952**
			609-166
54LS91	Motorola	SN54LS91	632-151
	TI	**SN54LS91**	**★952**
			632-153
	TI	SN54LS91	3790-124
54LS92	Fairchild	54LS92	611-123
	Motorola	SN54LS92	611-126
	National	DM54LS92	611-128
	SGS	54LS92	611-131
	Signetics	54LS92	611-133
	TI	**SN54LS92**	**★952**
			611-135
54LS924			
	TI	**SN54LS924**	**★1014**
54LS93	Fairchild	54LS93	608-122
	Motorola	SN54LS93	608-128
	National	DM54LS93	608-132
	SGS	54LS93	608-138
	Signetics	**54LS93**	**★529**
			608-142
	TI	**SN54LS93**	**★953**
			608-146
54LS95	Fairchild	54LS95B	631-98
			3788-105
	Motorola	SN54LS95B	631-102
			3788-121
	SGS	54LS95B	631-105
	Signetics	**54LS95B**	**★529**
			631-107
	TI	**SN54LS95B**	**★954**
			631-109
	TI	SN54LS95B	3788-93
54LS96	**Signetics**	**54LS96**	**★529**
			632-12
	Signetics	54LS96	3789-89
	TI	**SN54LS96**	**★954**
			632-14
	TI	SN54LS96	3789-94
54PL16L8			
	TI	**SN54PL16L8-1**	**★4901**
			★4910
			4480-88
54PL16R4			
	TI	**SN54PL16R4-1**	**★4901**
			★4910
			4480-89
54PL16R6			
	TI	**SN54PL16R6-1**	**★4902**
			★4910
			4480-90
54PL16R8			
	TI	**SN54PL16R8-1**	**★4902**
			★4910
			4480-91
54PL20L8			
	TI	**SN54PL20L8**	**★4903**
			★4914
			4480-1
54PL20R4			
	TI	**SN54PL20R4**	**★4903**
			★4914
			4480-2

Arranged alphanumerically from left to right

© IC MASTER 1984

Base Number	Source	Device	Page-Line
54PL20R6			
	TI	SN54PL20R6	★4904
			★4914
			4480-3
54PL20R8			
	TI	SN54PL20R8	★4904
			★4914
			4480-4
54PL333			
	TI	SN54PL333	4482-93
54PL335			
	TI	SN54PL335	4482-91
54PL839			
	TI	SN54PL839	★4905
			★4918
			4482-59
54PL840			
	TI	SN54PL840	★4905
			★4918
			4482-57
54PLR19L8			
	TI	SN54PLR19L8	★4906
			★4922
			4480-5
54PLR19R4			
	TI	SN54PLR19R4	★4906
			★4922
			4480-6
54PLR19R6			
	TI	SN54PLR19R6	★4907
			★4922
			4480-7
54PLR19R8			
	TI	SN54PLR19R8	★ 353
			★4907
			★4922
			4480-8
54PLT19L8			
	TI	SN54PLT19L8	★ 353
			★4908
			★4926
			4480-9
54PLT19R4			
	TI	SN54PLT19R4	★ 353
			★4908
			★4926
			4480-10
54PLT19R6			
	TI	SN54PLT19R6	4480-11
54PLT19R8			
	TI	SN54PLT19R8	★ 353
			★4909
			★4926
			4480-12
54S00	Fairchild	54S00	622-8
	National	DM54S00	622-11
	Signetics	54S00	★ 531
			622-13
	TI	SN54S00	★ 920
			622-15
54S02	Fairchild	54S02	624-107
	National	DM54S02	624-110
	Signetics	54S02	★ 531
			624-112
	TI	SN54S02	★ 920
			624-114
54S03	National	DM54S03	621-142
	TI	SN54S03	★ 921
			621-147
54S04	Fairchild	54S04	607-96
	National	DM54S04	607-99
	Signetics	54S04	★ 531
			607-101
	TI	SN54S04	★ 921
			607-104
54S05	Fairchild	54S05	606-157
	National	DM54S05	606-160
	Signetics	54S05	606-162
	TI	SN54S05	★ 921
			606-164
54S08	Fairchild	54S08	619-134
	National	DM54S08	619-136
	Signetics	54S08	★ 531
			619-138
	TI	SN54S08	★ 921
			619-140
54S09	Fairchild	54S09	619-75
	National	DM54S09	619-76
	TI	SN54S09	★ 923
			619-77
54S10	Fairchild	54S10	620-169
	National	DM54S10	620-172
	Signetics	54S10	★ 531
			620-174
	TI	SN54S10	★ 923
			620-176
54S109	Fairchild	54S109	617-79
54S11	Fairchild	54S11	619-33
	National	DM54S11	619-36
	Signetics	54S11	★ 531
			619-38
	TI	SN54S11	619-40
54S112	Fairchild	54S112	618-71
	National	DM54S112	618-74
	Signetics	54S112	★ 531
			618-76
	TI	SN54S112	★ 959
			618-78
54S113	Fairchild	54S113	618-28
	National	DM54S113	618-31
	Signetics	54S113	★ 531
			618-33
	TI	SN54S113	★ 959
			618-35
54S114	Fairchild	54S114	618-104
	National	DM54S114	618-106
	TI	SN54S114	★ 960
			618-108
54S124	TI	SN54S124	★ 962
			3215-39
54S13	Signetics	54S13	637-160
54S132	Fairchild	54S132	638-46
	TI	SN54S132	★ 965
			638-48
54S133	Fairchild	54S133	622-80
	National	DM54S133	622-83
	Signetics	54S133	★ 531
			622-85
	TI	SN54S133	★ 965
			622-87
54S134	Fairchild	54S134	622-62
	National	DM54S134	622-65
	Signetics	54S134	622-67
	TI	SN54S134	★ 965
			622-69
54S135	Fairchild	54S135	624-120
	National	DM54S135	624-123
	Signetics	54S135	624-125
	TI	SN54S135	★ 966
			624-127
54S136	National	DM54S136	624-149
54S137	Fairchild	54S137	613-98
54S138	Fairchild	54S138	613-72
	National	DM54S138	613-75
	TI	SN54S138	★ 968
			613-78
54S139	Fairchild	54S139	612-152
	National	DM54S139	612-155
	Signetics	54S139	612-157
	TI	SN54S139	★ 968
			612-159
54S140	Fairchild	54S140	613-133
			2670-39
	National	DM54S140	613-136
	Signetics	54S140	★ 531
			613-138
	Signetics	54S140	2670-45
	TI	SN54S140	★ 969
			613-140
	TI	SN54S140	2670-48
54S148	MMI	SN54S148	★ 819
	Motorola	SN54S148	639-61
54S15	Fairchild	54S15	618-168
	National	DM54S15	618-171
	TI	SN54S15	★ 925
			618-173
54S151	Fairchild	54S151	629-183
	National	DM54S151	629-188
	Signetics	54S151	★ 531
			629-190
	TI	SN54S151	★ 972
			630-1
54S153	Fairchild	54S153	628-67
	National	DM54S153	628-69
	Signetics	54S153	★ 531
			628-71
	TI	SN54S153	★ 972
			628-73
54S157	Fairchild	54S157	629-46
	National	DM54S157	629-49
	Signetics	54S157	★ 531
			629-51
	TI	SN54S157	★ 975
			629-53
54S158	Fairchild	54S158	628-154
	National	DM54S158	628-157
	Signetics	54S158	★ 531
			628-159
	TI	SN54S158	★ 975
			628-161
54S160	AMD	SN54S160	★1427
			610-68
54S161	AMD	SN54S161	★1427
			608-37
54S162	National	DM54S162	610-119
	TI	SN54S162	★ 978
			610-121
54S163	TI	SN54S163	★ 978
			608-79
54S167	Fairchild	54S167	637-83
54S168	TI	SN54S168	★ 980
			611-25
54S169	TI	SN54S169	★ 980
			609-26
54S172	Signetics	54S172	627-42
54S174	Fairchild	54S174	615-185
	National	DM54S174	615-188
	Signetics	54S174	615-190
	TI	SN54S174	★ 983
			615-192
54S175	Fairchild	54S175	615-72
	National	DM54S175	615-75
	Signetics	54S175	615-77
	TI	SN54S175	★ 983
			615-79
54S181	Signetics	54S181	★ 531
			604-67
	TI	SN54S181	★ 985
			604-69
54S182	MMI	SN54S182	★ 819
			604-100
	Signetics	54S182	604-103
	TI	SN54S182	★ 986
			604-105
54S188	National	DM54S188	★4057
			3760-34
54S189	AMD	SN54S189	3770-129
	Fairchild	54S189	3771-1
	National	DM54S189	3771-2
		DM54S189A	3770-94
	Signetics	54S189	★ 532
			3771-4
	TI	SN54S189A	★ 988
			3771-5
54S194	Fairchild	54S194	631-181
			3789-19
	National	DM54S194	631-183
	TI	SN54S194	★ 990
			631-185
	TI	SN54S194	3789-25
54S195	National	DM54S195	631-75
	Signetics	54S195	631-77
	TI	SN54S195	★ 991
			631-79
	TI	SN54S195	3789-26
54S196	National	DM54S196	610-15
	TI	SN54S196	★ 991
			610-17
54S197	TI	SN54S197	★ 992
			607-162
54S20	Fairchild	54S20	620-86
	National	DM54S20	620-89
	Signetics	54S20	620-91
	TI	SN54S20	★ 926
			620-93
54S210	MMI	SN54S210	★ 804
			607-118
			633-140
54S22	Fairchild	54S22	620-29
	National	DM54S22	620-32
	TI	SN54S22	★ 927
			620-34
54S226	TI	SN54S226	★ 996
			638-133
54S240	MMI	SN54S240	★ 804
			634-3
	MMI	SN54S240	2669-64
	National	DM54S240	2670-1
	Signetics	54S240	★ 531
			634-6
	TI	SN54S240	634-8
			2670-11
54S241	MMI	SN54S241	★ 804
			634-63
	MMI	SN54S241	2669-15
	National	DM54S241	2669-30
	Signetics	54S241	★ 531
			634-65
	TI	SN54S241	634-67
			2669-46
54S242	National	DM54S242	633-122
54S243	National	DM54S243	633-123
54S244	MMI	SN54S244	★ 804
			634-103
	MMI	SN54S244	2669-16
	Signetics	54S244	★ 531
			634-105
	TI	SN54S244	634-107
54S251	National	DM54S251	630-63
	Signetics	54S251	630-66
	TI	SN54S251	★1003
			630-68
54S253	Fairchild	54S253	628-18
	National	DM54S253	628-20
	Signetics	54S253	628-22
	TI	SN54S253	★1003
			628-24
54S257	National	DM54S257	628-190
	Signetics	54S257	628-192
	TI	SN54S257	★1004
			628-194
54S258	Fairchild	54S258	628-116
	National	DM54S258	628-119
	Signetics	54S258	628-121
	TI	SN54S258	★1005
			628-123
54S260	Fairchild	54S260	623-164
	Signetics	54S260	623-167
	TI	SN54S260	★1006
			623-169
54S273	MMI	SN54S273	★ 804
			616-85
	Signetics	54S273	★ 531
			616-87
54S274	TI	SN54S274	★1008
			604-125
54S275	TI	SN54S275	★1008
			605-124
54S280	Fairchild	54S280	639-97
	National	DM54S280	639-101
	Signetics	54S280	639-103
	TI	SN54S280	★1009
			639-106
54S281	TI	SN54S281	★1010
			605-43
54S283	TI	SN54S283	★1011
			605-119
54S287	National	DM54S287	★4057
			3760-108
54S288	National	DM54S288	★4057
			3760-35
54S289	AMD	SN54S289	3770-121
	Fairchild	54S289	3770-123
	National	DM54S289	3770-124
	TI	SN54S289A	★1012
			3770-127
54S299	National	DM54S299	633-15
	TI	SN54S299	★1016
			633-17
	TI	SN54S299	3790-12
54S30	Fairchild	54S30	622-56
	National	DM54S30	622-58
	TI	SN54S30	★ 929
			622-60

¶ Indicates page number in Application Note Directory.
★ Indicates addition data is provided on the page noted.

Base Number	Source	Device	Page-Line
54S301	**Signetics**	**54S301**	★ **532**
			3772-47
54S32	Fairchild	54S32	623-120
	National	DM54S32	623-122
	Signetics	54S32	623-124
	TI	**SN54S32**	★ **930**
			623-126
54S348	**MMI**	**SN54S348**	★ **819**
			639-58
	Motorola	SN54S348	639-62
54S350	AMD	SN54S350	638-140
	Signetics	54S350	638-142
54S37	Signetics	54S37	621-69
	TI	**SN54S37**	★ **932**
			621-71
54S373	**MMI**	**SN54S373**	★ **804**
			626-89
	National	DM54S373	626-92
	Signetics	54S373	626-94
	TI	**SN54S373**	★ **1025**
			626-96
54S374	**MMI**	**SN54S374**	★ **804**
			616-140
	National	DM54S374	616-143
	Signetics	**54S374**	★ **531**
			616-145
	TI	**SN54S374**	★ **1026**
			616-147
54S377	**MMI**	**SN54S377**	★ **804**
			616-166
54S378	AMD	SN54S378	616-24
54S379	AMD	SN54S379	615-117
54S38	Signetics	54S38	621-16
	TI	**SN54S38**	★ **932**
			621-18
54S381	**MMI**	**SN54S381**	★ **819**
			604-65
	TI	**SN54S381**	★ **1028**
			604-70
~~54S383~~	~~**MMI**~~	~~**SN54S383**~~	~~★ **804**~~
54S387	**National**	**DM54S387**	★ **4057**
			3760-103
54S388	AMD	SN54S388	615-92
54S399	AMD	SN54S399	629-111
54S40	Fairchild	54S40	619-186
	National	DM54S40	619-189
	Signetics	**54S40**	★ **531**
			619-191
	TI	**SN54S40**	★ **933**
			619-193
54S412	**TI**	**SN54S412**	★ **1033**
			626-97
	TI	SN54S412	1345-149
54S436	**TI**	**SN54S436**	★ **1035**
			★ **1036**
			614-84
			★ **1035**
			★ **1036**
			2683-86
54S437	**TI**	**SN54S437**	★ **1035**
			★ **1036**
			614-85
			★ **1035**
			★ **1036**
			2683-87
54S455	TI	SN54S455	3764-13
54S472	**National**	**DM54S472**	★ **4057**
			3762-4
		DM54S472A	★ **4057**
			3762-5
		DM54S472B	★ **4057**
			3762-6
54S473	**National**	**DM54S473**	★ **4057**
			3762-17
		DM54S473A	★ **4057**
			3761-128
54S474	**National**	**DM54S474**	★ **4057**
			3762-38
		DM54S474A	★ **4057**
			3762-7
		DM54S474B	★ **4057**
			3762-8
54S475	**National**	**DM54S475**	★ **4057**
			3762-19
		DM54S475A	★ **4057**
			3762-2
54S482	**TI**	**SN54S482**	★ **1042**
			637-55
	TI	SN54S482	1337-64
54S484	**TI**	**SN54S484**	★ **1043**
			3756-14
54S485	**TI**	**SN54S485**	★ **1043**
			3756-10
54S508	**MMI**	**SN54S508**	★ **810**
			603-1
54S51	Fairchild	54S51	622-149
	National	DM54S51	622-152
	Signetics	**54S51**	★ **531**
			622-154
	TI	**SN54S51**	★ **936**
			622-156
54S516	**MMI**	**SN54S516**	★ **813**
			604-110
54S533	**MMI**	**SN54S533**	★ **804**
			626-135
54S534	**MMI**	**SN54S534**	★ **804**
			616-58
	Signetics	54S534	616-61
54S557	**MMI**	**SN54S557**	★ **816**
			605-7
54S558	**MMI**	**SN54S558**	★ **816**
			605-8
54S570	**National**	**DM54S570**	★ **4057**
			3761-57
		DM54S570A	★ **4057**
			3761-58
54S571	**National**	**DM54S571**	★ **4057**
			3761-59
		DM54S571A	★ **4057**
			3761-60
		DM54S571B	★ **4057**
			3761-61
54S572	**National**	**DM54S572**	★ **4057**
			3763-7
		DM54S572A	★ **4057**
			3762-66
54S573	**National**	**DM54S573**	★ **4057**
			3763-10
		DM54S573A	★ **4057**
			3762-67
		DM54S573B	★ **4057**
			3762-97
54S64	Fairchild	54S64	623-59
	National	DM54S64	623-62
	Signetics	54S64	623-64
	TI	**SN54S64**	★ **941**
			623-66
54S65	Fairchild	54S65	623-68
	National	DM54S65	623-71
	Signetics	54S65	623-73
	TI	SN54S65	623-74
54S700	**MMI**	**SN54S700**	★ **804**
			★ **819**
			2683-102
54S730	MMI	54S730	1337-27
	MMI	**SN54S730**	★ **804**
			★ **819**
			2683-103
54S731	**MMI**	**SN54S731**	★ **804**
			★ **819**
			2683-104
54S734	MMI	54S734	1337-28
	MMI	**SN54S734**	★ **804**
			★ **819**
			2683-105
54S74	Fairchild	54S74	615-27
	Signetics	**54S74**	★ **531**
			615-31
	TI	SN54S74	615-33
54S740	TI	SN54S740	634-116
54S744	TI	SN54S744	634-68
54S85	**Signetics**	**54S85**	★ **531**
			603-74
	TI	**SN54S85**	★ **950**
			603-76
54S86	Fairchild	54S86	625-13
	Signetics	**54S86**	★ **531**
			625-17
	TI	**SN54S86**	★ **950**
			625-19
54SC137			
	Mitel	MD54SC137	579-2
54SC138			
	Mitel	MD54SC138	578-150
54SC139			
	Mitel	MD54SC139	578-108
54SC240			
	Mitel	MD54SC240	594-8
	SPI	SP54SC240	594-25
54SC241			
	Mitel	MD54SC241	594-46
	SPI	SP54SC241	594-61
54SC244			
	Mitel	MD54SC244	593-162
	SPI	SP54SC244	593-178
54SC245			
	Mitel	MD54SC245	594-136
			2678-33
	SPI	SP54SC245	594-149
54SC373			
	Mitel	MD54SC373	586-132
	SPI	SP54SC373	586-159
54SC374			
	Mitel	MD54SC374	581-74
	SPI	SP54SC374	581-105
54SC540			
	Mitel	MD54SC540	573-97
54SC541			
	Mitel	MD54SC541	573-98
54SC573			
	Mitel	MD54SC573	586-133
	SPI	SP54SC573	586-160
54SC574			
	Mitel	MD54SC574	581-75
	SPI	SP54SC574	581-106
54SL170			
	Motorola	SN54SL170	627-17
54SL245			
	TI	SN54SL245	2677-43
55	Amperex	BGY55A	3170-58
	Western	WD55	1265-30
550	ArrayTech	AT-D-550	4466-7
		AT-HSD-550	4462-37
	Intersil	MM550	2622-20
	National	TAA550	3225-126
			3225-128
			3225-130
			3227-125
			3227-127
			3227-128
	Plessey	SL550	3156-100
	SGS	TAA550	3173-143
5500	**Plessey**	**CLA5500**	★ **4817**
	Siemens	SDA5500	3172-148
		TDA5500	3172-151
~~5501~~	~~**MicroPwr**~~	~~**MP5501A**~~	~~★ **3529**~~
			3187-19
		MP5501C	★ **3529**
			3196-11
		MP5501E	★ **3529**
			3190-61
		MP5501F	★ **3529**
			3191-1
		MP5501G	★ **3529**
			3196-12
		MP5501H	★ **3529**
			3187-20
	TI	TMS5501	1346-22
			¶ 275-17
			¶ 276-2
	Toshiba	TC5501	588-40
			3773-86
		TC5501-1	3773-114
5502	**Harris**	**HC5502**	★ **3466**
			3218-82
	MicroPwr	**MP5502**	★ **3529**
			3175-28
			3191-6
		MP5502A	★ **3529**
			3186-61
		MP5502B	★ **3529**
			3196-18
		MP5502D	★ **3529**
			3196-19
		MP5502E	★ **3529**
			3186-62
5503	**MicroPwr**	**MP5503**	★ **3529**
5504	**Harris**	**HC5504**	★ **3467**
			3218-83
			(Continued)
5504	**MicroPwr**	**MP5504**	★ **3529**
	Toshiba	TC5504-1	3781-1
		TC5504-2	3781-2
		TC5504A-2	3780-28
		TC5504A-3	3780-77
5505	**MicroPwr**	**MP5505A**	★ **3529**
			3183-55
		MP5505B	★ **3529**
			3186-39
		MP5505C	★ **3529**
			3188-57
		MP5505E	★ **3529**
			3186-45
5507	**MicroPwr**	**MP5507A**	★ **3529**
			3181-26
		MP5507B	★ **3529**
			3182-42
		MP5507C	★ **3529**
			3203-42
		MP5507D	★ **3529**
			3184-10
		MP5507E	★ **3529**
			3182-54
5508	**MicroPwr**	**MP5508**	★ **3529**
			3185-9
	Toshiba	TC5508	588-18
			3775-37
		TC5508-1	3775-50
		TC5508-4	3775-39
5509	**MicroPwr**	**MP5509A**	★ **3529**
			3210-13
		MP5509E	★ **3529**
			3210-14
	OKI	**MSM5509**	★ **4118**
			3166-139
551	**Datel**	**AM-551MC**	★ **2861**
			3188-10
		AM-551MM	★ **2861**
			3188-11
	Intersil	MM551	2621-98
	Siemens	S551	3166-20
5510	Harris	HC5510	3216-110
	MicroPwr	**MP5510A**	★ **3529**
			3189-8
		MP5510B	★ **3529**
			3189-9
		MP5510C	★ **3529**
			3204-58
		MP5510E	★ **3529**
			3189-10
	Panasonic	AN5510	3172-75
55107	Fairchild	55107A	2673-21
	~~Motorola~~	~~MC55107~~	~~2673-24~~
	National	DS55107	2673-26
			2673-40
	TI	SN55107A	2673-28
		SN55107B	2673-42
55108	Motorola	MC55108	2673-31
	National	DS55108	2673-33
			2673-45
		MM55108	3214-117
	TI	SN55108A	2673-35
		SN55108B	2673-47
55109	TI	SN55109A	2671-7
5511	Harris	HC5511	3216-47
	MicroPwr	**MP5511A**	★ **3529**
			3210-15
		MP5511E	★ **3529**
			3210-16
55110	Fairchild	55110A	2671-9
	National	MM55110	3214-118
	TI	SN55110A	2671-14
55113	National	DS55113	2670-57
	TI	SN55113	2670-59
55114	National	DS55114	2670-32
	TI	SN55114	2670-35
55115	National	DS55115	2673-61
	TI	SN55115	2674-1
55116	TI	SN55116	2678-50
55117	TI	SN55117	2678-56
55118	TI	SN55118	2678-52
55119	TI	SN55119	2678-54
5512	**Harris**	**HC5512**	★ **3468**
			3217-87
		HC5512A	★ **3468**
			★ **3468**
			(Continued)

Arranged alphanumerically from left to right.

Base Number	Source	Device	Page-Line
5512	**Harris**	**HC5512A**	**3217-88**
		HC5512C	**★3468**
			3217-89
	Panasonic	AN5512	3172-76
	Signetics	**NE5512**	**★3638**
			3175-8
			3206-54
		SE5512	**★ 526**
			★3638
			3175-10
55121	National	DS55121	2668-7
		MM55121	3214-119
	TI	SN55121	2668-12
55122	National	DS55122	2672-19
	TI	SN55122	2672-22
55123	National	MM55123	3214-120
55124	National	MM55124	3214-121
55126	National	MM55126	3214-122
55128	TI	SN55128	2670-37
55138	TI	SN55138	2676-39
5514	**MicroPwr**	**MP5514**	**★3529**
	Signetics	**NE5514**	**★3640**
			3175-9
		SE5514	**★3640**
			3175-11
	Toshiba	TC5514	3777-15
		TC5514-1	3777-50
		TC5514-2	3777-52
		TC5514A-2	3776-50
		TC5514A-3	3776-110
		TC5514AL-2	3776-51
		TC5514AL-3	3776-111
55140	TI	SN55140	2672-6
55141	TI	SN55141	2672-7
55142	TI	SN55142A	2672-2
55143	TI	SN55143A	2672-3
55150	TI	SN55150	2668-21
55152	TI	SN55152	2674-6
55154	Fairchild	55154	2672-54
55157	TI	SN55157	2673-55
5516	Toshiba	TC5516A	3779-19
		TC5516A-2	3778-118
		TC5516AL-2	3778-119
5517	**Signetics**	**NE5517**	**★3642**
			3206-55
		NE5517A	**★3642**
			3206-56
		SE5517	**★3642**
	TI	**TMS5517**	**★ 543**
	Toshiba	TC5517A	3779-20
		TC5517A-2	3779-21
55173	TI	SN55173	2674-31
5518	Toshiba	TC5518B-2	3779-22
55180	TI	SN55180	636-127
55182	TI	SN55182	2674-7
55183	TI	SN55183	2670-49
55188	TI	SN55188	2668-56
55189	TI	SN55189	2672-32
		SN55189A	2672-41
552	Intersil	MM552	2622-2
	Siemens	S552	3166-21
5520	**MicroPwr**	**MP5520A**	**★3046**
			2638-15
		MP5520B	**★3046**
			2638-16
		MP5520C	**★3046**
			2638-17
		MP5520D	**★3046**
			2638-31
		MP5520F	**★3046**
			2638-18
		MP5520H	**★3046**
			2638-19
	Panasonic	AN5520	3172-77
	Signetics	**NE5520**	**★3635**
			3234-135
			3235-9
	SiliconG	SG5520	2684-6
	TI	SN5520	2684-10
5521	SiliconG	SG5521	2684-7
5522	SiliconG	SG5522	2684-42
	TI	SN5522	2684-46
5523	SiliconG	SG5523	2684-43
55232	TI	SN55232	2684-24
55234	TI	SN55234	2684-17
55236	SiliconG	SG55236	2684-11
	TI	SN55236	2684-13
55237	TI	SN55237	2684-14
5524	**OKI**	**MSM5524**	**★4118**
			3166-114
	SiliconG	SG5524	2684-32
	TI	SN5524	2684-36
5525	**OKI**	**MSM5525**	**★4118**
			3167-141
	SiliconG	SG5525	2684-33
5526	OKI	MSM5526	3167-136
5527	**MicroPwr**	**MP5527**	**★3529**
			3181-11
5528	**OKI**	**MSM5528**	**★4118**
			3166-140
	SiliconG	SG5528	2684-37
	TI	SN5528	2684-41
5529	OKI	MSM5529	3166-141
	SiliconG	SG5529	2684-38
5530	SMOS	SVM5530	3167-1
5531	**MicroPwr**	**MP5531**	**★3529**
			3236-138
5532	**Exar**	**XR5532**	**★3378**
			3206-29
		XR5532A	**★3378**
			3206-30
	MicroPwr	**MP5532**	**★3529**
			3237-66
	Raytheon	**RC5532**	**★3592**
	Signetics	**NE5532**	**★3644**
			3206-33
		NE5532A	**★3644**
			★3644
			3206-34
		SE5532	**★ 526**
			★3644
			3205-43
		SE5532A	**★ 526**
			★3644
			★3644
			3205-44
	TI	NE5532	3206-27
		NE5532A	3206-28
55325	Motorola	MC55325	2680-71
	National	DS55325	2680-73
	SiliconG	SG55325	2680-75
	TI	SN55325	2680-77
55326	SiliconG	SG55326	2680-79
	TI	SN55326	2680-83
55327	SiliconG	SG55327	2680-80
	TI	SN55327	2680-84
55329	TI	SN55329	2684-71
5533	**Exar**	**XR5533**	**★3379**
			3206-31
		XR5533A	**★3379**
			3206-32
	Signetics	**NE5533**	**★3646**
			3206-35
		NE5533A	**★3646**
			3206-36
5534	**Exar**	**XR5534**	**★3379**
			3193-62
		XR5534A	**★3379**
			3194-1
		XR5534C	**★3379**
			3194-2
		XR5534M	**★3379**
			3191-51
	Raytheon	**RC5534**	**★3592**
			3194-3
	Raytheon	RM5534	3191-52
	Signetics	NE5534	3194-4
	Signetics	**NE5534A**	**★3646**
			3194-5
		SE5534	**★ 526**
			3191-53
		SE5534A	**★ 526**
			★3646
			3191-54
	SiliconG	SG5534	2684-20
	TI	NE5534	3194-6
		NE5534A	3194-7
		SE5534	3191-55
5535	Signetics	NE5535	3208-21
		SE5535	3206-19
	SiliconG	SG5535	2684-21
55355	TI	SN55355	2682-167
55363	TI	SN55363	2681-28
55365	TI	SN55365	2683-1
55369	TI	SN55369	2681-55
5537	**MicroPwr**	**MP5537**	**★3529**
			3181-12
	Signetics	**NE5537**	**★3669**
			3238-69
	Signetics	SE5537	3238-70
5538	SiliconG	SG5538	2684-25
5539	**Signetics**	**NE5539**	**★3678**
			3180-143
			3197-39
		SE5539	**★ 526**
			★3678
			3180-144
			3197-40
	SiliconG	SG5539	2684-26
554	National	MM554	2623-14
5540	MicroPwr	MP5540	3236-104
5541	MicroPwr	MP5541	3236-139
5542	MicroPwr	MP5542	3237-67
55426	TI	SN55426B	2662-94
55427	TI	SN55427B	2662-95
5543	MicroPwr	MP5543	3236-140
5544	MicroPwr	MP5544	3237-25
5545	MicroPwr	MP5545	3237-68
55450	Fairchild	55450B	2681-63
	National	DS55450	2681-71
	SiliconG	SG55450	2681-78
		SG55450B	2681-79
	TI	SN55450B	2681-90
55451	National	DS55451	2681-72
	SiliconG	SG55451	2681-80
	TI	SN55451B	2681-91
55452	Fairchild	55452B	2681-118
	National	DS55452	2681-124
	SiliconG	SG55452	2681-128
	TI	SN55452B	2681-132
55453	National	DS55453	2682-28
	SiliconG	SG55453	2682-32
	TI	SN55453B	2682-36
55454	National	DS55454	2681-157
	SiliconG	SG55454	2681-161
	TI	SN55454B	2682-3
55460	SiliconG	SG55460	2681-81
		SG55460B	2681-82
	TI	SN55460	2681-92
55461	National	DS55461	2681-73
	SiliconG	SG55461	2681-83
	TI	SN55461	2681-93
55462	National	DS55462	2681-125
	SiliconG	SG55462	2681-129
	TI	SN55462	2681-133
55463	National	DS55463	2682-29
	SiliconG	SG55463	2682-33
	TI	SN55463	2682-37
55464	National	DS55464	2681-158
	SiliconG	SG55464	2681-162
	TI	SN55464	2682-4
55470	TI	SN55470	2681-94
55471	TI	SN55471	2681-95
55472	TI	SN55472	2681-134
55473	TI	SN55473	2682-38
55474	TI	SN55474	2682-5
55492	Fairchild	55492A	2663-47
55493	National	DS55493	2663-14
55494	National	PS55494	2663-55
555	Exar	XR555C	3220-31
		XR555M	3220-32
		XRL555	3220-33
	Fairchild	uA555C	3220-34
	Intersil	MM555	2621-75
		NE555	3220-35
		SE555	3220-36
	National	LM555C	3220-39
	Raytheon	RC555	3220-41
		RM555	3220-42
	RCA	**CA555**	**★3604**
			3220-43
		CA555C	**★3604**
			3220-44
	Signetics	NE555	3220-45
	Signetics	**SE555**	**★ 526**
			3220-46
		SE555C	**★ 526**
			(Continued)
555	**Signetics**	**SE555C**	**3220-47**
	SiliconG	SG555	3220-48
		SG555C	3220-49
	TI	NE555	3220-53
		SE555	3220-54
	TI	**TLC555C**	**★3699**
5550	**OKI**	**MSM5550**	**★4118**
	Signetics	TEA5550	3167-116
55500	**TI**	**SN55500**	**★ 541**
55501	**TI**	**SN55501**	**★ 541**
55536	**Harris**	**HC55536**	**★3470**
			3169-72
			3216-154
55564	**Harris**	**HC55564**	**★3469**
			3169-73
			3216-155
5557	**OKI**	**MSM5557**	**★4118**
			3166-120
5558	**OKI**	**MSM5558**	**★4118**
			3166-142
55581	**OKI**	**MSM55581**	**★4118**
556	Exar	XR556C	3220-68
		XR556M	3220-69
		XRL556C	3220-70
		XRL556M	3220-71
	Fairchild	uA556C	3220-72
	Intersil	NE556	3220-73
		SE556	3220-74
	National	LM556	3220-77
		LM556C	3220-78
	Raytheon	RC556	3220-79
		RM556	3220-80
	Signetics	NE556	3220-81
		NE556-1	3220-82
		SA556	3220-83
		SA556-1	3220-84
	Signetics	**SE556**	**★ 526**
			3220-85
		SE556-1	**★ 526**
			3220-86
		SE556-1C	**★ 526**
			3220-87
	SiliconG	SG556	3220-88
		SG556C	3220-89
	TI	NE556	3220-90
		SE556	3220-91
5560	**Signetics**	**NE5560**	**★3652**
			3230-98
		SE5560	**★ 526**
			★3652
			3230-100
	Signetics	TEA5560	3168-51
5561	Signetics	NE5561	3230-99
		SE5561	3230-101
5564	Toshiba	TC5564	3781-100
		TC5564-1	3781-115
		TC5564L	3781-101
		TC5564L-1	3781-116
5565	Toshiba	TC5565	3781-102
		TC5565-1	3781-117
		TC5565L	3781-103
5570	Signetics	TEA5570	3168-7
558	**AD**	**AD558J**	**★2817**
			★2825
			2641-40
			¶ 279-14
			¶ 283-4
		AD558K	**★2817**
			★2825
			2639-49
			¶ 279-14
			¶ 283-4
		AD558S	**★2817**
			★2825
			2642-19
			¶ 279-14
			¶ 283-4
		AD558T	**★2817**
			★2825
			2640-1
			¶ 279-14
			¶ 283-4
	Exar	XR558C	3220-93
		XR558M	3220-94
	Signetics	**NE558**	**★3670**
			3220-95
			(Continued)

¶ Indicates page number in Application Note Directory.
★ Indicates addition data is provided on the page noted.

Base Number	Source	Device	Page-Line
558	**Signetics**	**SA558**	★3670
			3220-96
		SE558	★3670
			3220-97
5580	Signetics	TEA5580	3168-156
559	Exar	XR559C	3220-98
		XR559M	3220-99
	Motorola	MHW559	3170-79
5592	**Signetics**	**NE5592**	★3683
		SE5592	★3683
55S20	Fairchild	55S20	2684-4
55S234	Fairchild	55S234	2684-15
55S24	Fairchild	55S24	2684-29
56	Amperex	BGY56	3170-59
560	Cherry	CS560	3238-153
	Hitachi	SAS560	3173-100
	Motorola	MHW560	3170-80
	National	TBA560	3170-127
	Plessey	SL560	3156-101
			¶ 299-18
	SBE	560	1959-32
	Siemens	SAS560	3173-103
	Telefunken	TBA560	3171-6
5600	Intersil	IM5600C	3760-55
	LSILogic	**LL5600**	★4762
			4465-51
	Plessey	**CLA5600**	★4817
	Siemens	TDA5600	3172-152
5601	Reticon	R5601A-1	3239-1
			¶ 316-12
		R5601A-2	3239-2
			¶ 316-12
	SiliconSys	**SSI5601**	★3685
	SSS	SCL5601	3166-160
5602	Reticon	R5602A-1	3216-4
		R5602A-3	3216-5
		R5602A-7	3216-6
		R5602A-8	3216-7
5603	Intersil	IM5603C	3760-114
		IM5603M	3760-125
5604	Intersil	IM5604C	3761-77
		IM5604M	3761-81
	Reticon	R5604	3216-22
5605	Reticon	R5605	3216-23
5606	Reticon	R5606	3216-24
5609	Reticon	R5609	3216-25
561	**AD**	**AD561J**	★2825
			2644-9
		AD561K	★2825
			2643-43
		AD561S	★2825
			2644-10
		AD561T	★2825
			2643-44
	Motorola	MHW561	3170-81
	Plessey	SL561	3165-130
		SL561B	3165-131
		SL561C	3165-132
	Signetics	MB561	3166-99
	Signetics	**NE561**	★3657
		SE561	★3657
5610	**Harris**	**HI5610-2**	★2926
			2643-37
			¶ 282-2
		HI5610-4	★2926
			2643-38
			¶ 282-2
		HI5610-5	★2926
			2643-39
			¶ 282-2
		HI5610-8	★2926
			2643-40
			¶ 282-2
	Intersil	IM5610C	3760-54
		IM5610M	3760-59
	MicroNet	**MN5610**	★3043
			2631-42
	Siemens	TDA5610	3172-153
5611	**MicroNet**	**MN5611**	★3043
	Reticon	R5611	3216-26
	Siemens	TDA5611	3172-154
5612	**MicroNet**	**MN5612**	★3043
	Reticon	R5612	3216-27
5613	**MicroNet**	**MN5613**	★3043
	Reticon	R5613	3216-28
	Sanyo	LC5613	3167-42
5614	**MicroNet**	**MN5614**	★3043
	Reticon	R5614	3216-29
5615	**MicroNet**	**MN5615**	★3043
	Reticon	R5615	3216-30
5616	**MicroNet**	**MN5616**	★3043
	Reticon	R5616	3216-31
5617	**MicroNet**	**MN5617**	★3043
5618	**Harris**	**HI5618A-2**	★2929
			2639-8
		HI5618A-5	★2929
			2639-9
		HI5618B-2	★2929
			2640-12
		HI5618B-5	★2929
			2640-13
562	**AD**	**AD562A/BCD**	★2827
			★2829
			2652-12
		AD562A/BIN	★2827
			★2829
			2652-13
		AD562K/BCD	★2827
			★2829
			2657-11
		AD562K/BIN	★2827
			★2829
			2651-30
		AD562S/BCD	★2827
			★2829
			2657-12
		AD562S/BIN	★2827
			★2829
			2648-31
	Datel	**DAC-562C**	★2863
			2650-3
		DAC-562M	★2863
			2648-8
	Harris	**HI562A-2**	★2920
			2648-24
			¶ 282-2
		HI562A-4	★2920
			2650-22
			¶ 282-2
		HI562A-5	★2920
			2650-23
			¶ 282-2
		HI562A-8	★2920
			2648-25
			¶ 282-2
	MicroPwr	AD562S/BIN	2648-32
	MicroPwr	**MP562H**	★3046
			2651-24
		MP562J	★3046
			2651-25
		MP562K	★3046
			2651-26
	Motorola	**AD562**	★3069
			2650-36
	Motorola	MHW562	3170-82
	Signetics	MB562	3166-100
5620	Panasonic	AN5620	3170-142
	Reticon	R5620	3216-32
			3232-8
5621	Reticon	R5621	3216-33
			3232-6
			3232-28
	Sanyo	LC5621	3167-35
5622	Reticon	R5622	3216-34
			3232-7
			3232-29
5623	Intersil	IM5623C	3760-116
		IM5623M	3760-126
5624	Intersil	IM5624C	3761-76
		IM5624M	3761-80
5625	Reticon	R5625	3217-68
5626	Reticon	R5626	4475-24
			3216-21
			3238-108
563	**AD**	**AD563J**	★2826
			2651-29
		AD563J/BCD	★2826
			2657-13
		AD563J/BIN	★2826
			2651-31
		AD563K/BCD	★2826
			2657-14
			(Continued)
563	**AD**	**AD563K/BIN**	★2826
			2648-33
		AD563S/BCD	★2826
			2657-15
		AD563S/BIN	★2826
			2648-34
		AD563T/BCD	★2826
			2657-16
		AD563T/BIN	★2826
			2648-35
	Motorola	**AD563**	★3069
			2650-37
5630	Panasonic	AN5630	3170-143
	Reticon	R5630	3218-11
5631	Reticon	R5631	3218-12
5632	Reticon	R5632	3218-17
5633	Reticon	R5633	3218-5
5634	Reticon	R5634	3218-18
564	Siemens	SM564	3171-58
	Signetics	**NE564**	★3649
			3214-30
		SE564	★3649
			3214-31
565	**AD**	**AD565AJ**	★2826
			★2828
			2649-24
		AD565AK	★2826
			★2828
			2648-1
		AD565AS	★2826
			★2828
			2649-25
		AD565AT	★2826
			★2828
			2648-2
		AD565J	★2826
			★2828
			2650-16
		AD565K	★2826
			★2828
			2648-18
		AD565S	★2826
			★2828
			2650-17
		AD565T	★2826
			★2828
			2648-19
	Fairchild	uA565J	2650-18
		uA565K	2648-20
		uA565S	2650-19
		uA565T	2648-21
	Harris	**HI565AJ**	★2923
			2650-32
		HI565AK	★2923
			2648-26
		HI565AS	★2923
			2650-33
		HI565AT	★2923
			2648-27
	MCE	MCE565AJ	2649-26
		MCE565AS	2649-27
		MCE565J	2650-10
		MCE565K	2648-22
		MCE565S	2650-11
		MCE565T	2648-23
	MicroNet	**MN565A**	★3044
	Motorola	LM565	3215-1
		NE565	3215-2
	National	LM565	3215-3
		LM565C	3215-4
	Raytheon	**DAC-565**	★3589
	Signetics	NE565	3215-5
		SE565	3215-6
566	**AD**	**AD566AJ**	★2827
			★2829
			2650-6
		AD566AK	★2827
			★2829
			2648-10
		AD566AS	★2827
			★2829
			2650-7
		AD566AT	★2827
			★2829
			2648-11
		AD566J	★2827
			(Continued)
566	**AD**	**AD566J**	★2829
			2650-8
		AD566K	★2827
			★2829
			2648-12
		AD566S	★2827
			★2829
			2650-9
		AD566T	★2827
			★2829
			2648-13
	MCE	MCE566AJ	2650-12
		MCE566AK	2648-14
		MCE566AS	2650-13
		MCE566AT	2648-15
		MCE566J	2650-14
		MCE566K	2648-16
		MCE566S	2650-15
		MCE566T	2648-17
	National	LM566	3215-12
		LM566C	3215-13
	NEC	uPC566	3165-126
	Signetics	NE566	3215-16
		SE566	3215-17
5660	**Harris**	**HI5660-2**	★2950
			2654-47
		HI5660-5	★2950
			2654-48
		HI5660A-2	★2950
			2654-49
		HI5660A-5	★2950
			2654-50
567	**AD**	**AD567J**	★2827
			2650-34
		AD567K	★2827
			2648-28
		AD567S	★2827
			2650-35
	Exar	XR567AC	★3367
			3214-142
			3218-122
			¶ 299-3
		XR567AM	★3367
			3214-143
			3218-123
			¶ 299-3
		XRL567C	★3367
			3214-144
		XRL567M	★3367
			3214-145
	National	LM567	3214-146
		LM567C	3214-147
			3218-124
	Signetics	NE567	3214-150
			3218-127
		SE567	3214-151
			3218-128
5680	**Harris**	**HI5680I-5**	★2932
			2649-40
		HI5680V-5	★2932
			2652-7
5685	**Harris**	**HI5685I-4**	★2938
			2649-41
		HI5685V-4	★2938
			2652-8
5687	Harris	HI5687I-2	2649-42
		HI5687V-2	2652-9
569	Intel	iSBC569	1963-24
57	Amperex	BGY57	3170-60
570	**AD**	**AD570J**	★2838
			2627-7
		AD570S	★2838
			2627-8
	HiLevel	DS570EMULYZER	1813-5
	Hitachi	SAS570	3173-101
	MCE	MCE570J	2627-9
		MCE570S	2627-10
	Motorola	MHW570	3170-83
	Siemens	SAS570	3173-104
	Signetics	**NE570**	★3616
			3216-129
	SiliconSys	**SSI570**	★4208
5700	**MicroNet**	**MN5700**	★3043
			2634-6
	National	TP5700	3218-65
			(Continued)

Arranged alphanumerically from left to right.

Base Number	Source	Device	Page-Line
5700	Panasonic	AN5700	3172-53
	Plessey	**CLA5700**	★4817
	Sanyo	LA5700	3235-159
5703	Sprague	UDN-5703A	2683-71
		UDS-5703H	2683-72
5706	Sprague	UDN-5706A	613-161
			2683-40
		UDS-5706H	613-162
			2683-41
5707	Sprague	UDN-5707A	2683-50
		UDS-5707H	2683-51
571	AD	AD571J	2630-2
		AD571K	2629-43
		AD571S	2630-3
	Fairchild	uA571J	2630-6
		uA571K	2629-44
		uA571S	2630-7
		uA571T	2629-45
	MCE	MCE571J	2630-4
		MCE571S	2630-5
	Signetics	**NE571**	★3616
			3216-130
		SA571	★3616
			3216-132
5710	National	TP5710	3218-66
	Panasonic	AN5710	3172-129
5711	Sprague	UDN-5711M	2681-113
		UDS-5711H	2681-115
5712	**Harris**	**HI5712-2**	★2961
			2631-20
			¶ 266-16
			¶ 267-6
		HI5712-5	★2961
			2631-21
			¶ 266-16
			¶ 267-6
		HI5712-7	★2961
			2631-22
			¶ 266-16
			¶ 267-6
		HI5712-8	★2961
			2631-23
			¶ 266-16
			¶ 267-6
		HI5712A-2	★2961
			2631-24
			¶ 266-16
			¶ 267-6
		HI5712A-7	★2961
			2631-25
			¶ 266-16
			¶ 267-6
		HI5712A-8	★2961
			2631-26
			¶ 266-16
			¶ 267-6
	Intech	DAS5712	2630-20
			3233-53
	Sprague	UDN-5712M	2681-152
		UDS-5712H	2681-154
5713	Sprague	UDN-5713M	2682-56
		UDS-5713H	2682-58
5714	Intech	DAS5714	2635-42
			3233-54
	Sprague	UDN-5714M	2682-22
		UDS-5714H	2682-24
5716	Intech	DAS5716	2636-13
			3233-55
57190	National	MM57190	3214-89
572	**AD**	**AD572A**	★2838
			2632-37
		AD572B	★2838
			2632-38
		AD572S	★2838
			2632-39
	Motorola	MHW572	3170-84
	Siemens	S572	3173-60
	Signetics	**NE572**	★3616
			3216-131
5720	Panasonic	AN5720	3172-130
5722	Sprague	UDN-5722M	2681-146
573	**AD**	**AD573J**	★2832
			★2838
			2630-1
		AD573K	★2832
			★2838
			(Continued)

Base Number	Source	Device	Page-Line
573	**AD**	**AD573K**	2629-31
		AD573S	★2832
			★2838
			2629-32
5730	Panasonic	AN5730	3171-171
5732	Sprague	UDN-5732M	2681-116
5733	Sprague	UDN-5733M	2683-61
		UDS-5733H	2683-62
574	**AD**	**AD574AJ**	★2833
			★2838
			2634-33
		AD574AK	★2833
			★2838
			2632-33
		AD574AS	★2833
			★2838
			2634-34
		AD574AT	★2833
			★2838
			2632-42
		AD574J	★2833
			★2838
			2634-37
		AD574K	★2833
			★2838
			2632-43
		AD574L	★2833
			★2838
			2632-44
		AD574S	★2833
			★2838
			2632-45
		AD574T	★2833
			★2838
			2632-46
		AD574U	★2833
			★2838
			2632-47
		AD574ZJ	★2833
			★2838
			2634-39
		AD574ZK	★2833
			★2838
			2634-40
		AD574ZL	★2833
			★2838
			2632-53
		AD574ZS	★2833
			★2838
			2632-54
		AD574ZT	★2833
			★2838
			2632-55
		AD574ZU	★2833
			★2838
			2633-1
	Harris	**HI574AJ**	★2969
			2634-31
		HI574AK	★2969
			2635-4
		HI574AL	★2969
			2635-5
		HI574AS	★2969
			2634-32
		HI574AT	★2969
			2635-6
		HI574AU	★2969
			2635-7
	HybridSys	**HS574J**	★2981
			2630-16
		HS574K	★2981
			2632-26
		HS574L	★2981
			2632-27
		HS574S	★2981
			2630-17
		HS574T	★2981
			2634-26
		HS574U	★2981
			2634-27
	MCE	MCD574K	2632-48
		MCE574AS	2634-30
		MCE574J	2634-38
		MCE574L	2632-49
		MCE574S	2632-50
		MCE574T	2632-51
			(Continued)

Base Number	Source	Device	Page-Line
574	MCE	MCE574U	2632-52
		MCE574ZJ	2634-41
		MCE574ZK	2634-42
		MCE574ZL	2633-2
		MCE574ZS	2633-3
		MCE574ZT	2633-4
		MCE574ZU	2633-5
	MicroNet	**MN574A**	★3043
			2632-34
	MicroPwr	**MP574J**	★3046
			2634-35
		MP574K	★3046
			2635-8
		MP574L	★3046
			2635-9
		MP574S	★3046
			2634-36
		MP574T	★3046
			2635-10
		MP574U	★3046
			2635-11
57401	**MMI**	**C57401**	★ 805
			3757-41
		C57401A	★ 805
			3757-50
57402	**MMI**	**C57402**	★ 805
			3757-56
		C57402A	★ 805
			3757-59
57409	National	MM57409	1351-150
			1355-48
5742	Sprague	UDN-5742M	2681-117
57436	National	MM57436	1351-155
			1355-53
57455	National	MM57455	1354-97
57459	National	MM57459	1351-156
			1355-54
57499	National	MM57499	641-90
575	NEC	uPC575	3171-163
5750	Panasonic	AN5750	3171-91
		MN5750	3166-25
5753	Fujitsu	FT5753	2682-76
5754	Fujitsu	FT5754	2682-77
5755	Fujitsu	[illegible]5	2682-78
57558	MMI	57558	604-166
		57558-1	604-167
576	Siemens	S576A	3173-128
		S576B	3173-129
		S576C	3173-130
5760	Panasonic	AN5760	3171-92
577	NEC	uPC577	3167-145
578	**AD**	**AD578J**	★2839
			2630-46
		AD578K	★2839
			2630-39
		AD578L	★2839
			2630-33
		AD578S	★2839
			2630-47
		AD578T	★2839
			2630-40
579	**AD**	**AD579B**	★2839
			2629-14
		AD579J	★2839
			2629-17
		AD579K	★2839
			2629-15
		AD579T	★2839
			2629-16
5790	Sprague	UDS-5790H	641-102
			2683-12
			3235-129
5791	Sprague	UDS-5791H	641-103
			2683-13
			3235-130
58	Amperex	BGY58A	3170-61
580	**AD**	**AD580J**	★2842
			3236-90
		AD580K	★2842
			3236-91
		AD580L	★2842
			3236-92
		AD580S	★2842
			3236-93
		AD580T	★2842
			3236-94
			(Continued)

Base Number	Source	Device	Page-Line
580	**AD**	**AD580U**	★2842
			3236-95
	AWI	AW580	2661-22
	Cherry	CS580	3166-60
	Motorola	MHW580	3170-85
	NEC	UPC580	3170-135
	Siemens	SAS580	3173-105
5800	**Plessey**	**CLA5800**	★4817
5803	**OKI**	**MSM5803**	★4118
			3167-30
5805K3	Motorola	MC5805K3	1273-32
581	**AD**	**AD581J**	★2842
			3237-44
		AD581K	★2842
			3237-45
		AD581L	★2842
			3237-46
		AD581S	★2842
			3237-47
		AD581T	★2842
			3237-48
		AD581U	★2842
			3237-49
	HybridSys	ADC581B-12	2632-29
		ADC581C-12	2632-30
5810	Sprague	UCN-5810A	2679-5
58106	National	MM58106	3166-164
5812	Sprague	UCN-5812A	2679-6
58142	National	MM58142	3166-165
58143	National	MM58143	3166-91
58144	National	MM58144	3166-92
5815	**MicroNet**	**MN5815**	★3043
			2625-48
5816	**OKI**	**MSM5816**	★4118
			3173-68
5818	Sprague	UCN-5818A	2679-7
5819	**OKI**	**MSM5819**	★4118
			3173-53
582	**AD**	**AD582K**	★2847
			3237-161
		AD582S	★2847
			3237-162
	HybridSys	ADC582B-12	2631-55
		ADC582C-12	2632-1
58201	National	MM58201	2661-73
5825	**MicroNet**	**MN5825**	★3043
			2626-4
58250	National	MM58250	3169-36
58275	Mitsubishi	M58275-15	3778-75
58282	**OKI**	**MSM58282**	★4118
			1338-125
58283	**OKI**	**MSM58283**	★4118
			1338-126
58292	**OKI**	**MSM58292**	★4118
			1338-127
58293	**OKI**	**MSM58293**	★4118
			1338-128
583	**AD**	**AD583K**	★2847
			3237-163
		AD583S	★2847
			3237-164
5832	**OKI**	**MSM5832**	★4118
58321	**OKI**	**MSM58321**	★4118
			1338-121
5837	National	MM5837	3167-74
			3235-88
58371	**OKI**	**MSM58371**	★4118
			1338-124
5838	**OKI**	**MSM5838**	★4118
			1338-123
5839	**OKI**	**MSM5839**	★4118
			1338-122
584	**AD**	**AD584**	★2842
			3236-96
			3236-137
			3237-24
			3237-50
		AD584J	★2842
			3236-130
		AD584K	★2842
			3236-131
		AD584L	★2842
			3236-132
		AD584S	★2842
			3236-133
		AD584T	★2842
			(Continued)

¶ Indicates page number in Application Note Directory.
★ Indicates addition data is provided on the page noted.

Base Number	Source	Device	Page-Line
584	**AD**	**AD584T**	**3236-134**
		AD584U	**★2842**
			3236-135
	Toshiba	TC584B	593-157
5840	**OKI**	**MSM5840**	**★4118**
			1261-11
		MSM5840RS	**★4118**
			1261-12
5842	**OKI**	**MSM5842**	**★4118**
			1338-119
58421	**OKI**	**MSM58421**	**★4118**
			1338-117
		MSM58421GS	**★4118**
			1261-13
58422	**OKI**	**MSM58422**	**★4118**
			1338-118
584223	OKI	MSM584223RS	
			1261-14
58438	National	MM58438	2664-17
5845	**OKI**	**MSM5845**	**★4118**
			1338-120
	OKI	MSM5845	1261-15
5846	**OKI**	**MSM5846**	**★4118**
585	**AD**	**AD585J**	**★2842**
			★2847
			3237-165
		AD585S	**★2842**
			★2847
			3237-166
5865	National	MM5865	640-38
			¶ 314-12
			¶ 314-13
			3220-63
			¶ 314-12
			¶ 314-13
587	Signetics	NE587	2662-72
58725	Mitsubishi	M58725	3778-124
58735	Mitsubishi	M58735	3766-53
589	**AD**	**AD589J**	**★2842**
			3236-68
			¶ 314-2
		AD589K	**★2842**
			3236-69
			¶ 314-2
		AD589L	**★2842**
			3236-70
			¶ 314-2
		AD589M	**★2842**
			3236-71
			¶ 314-2
		AD589S	**★2842**
			3236-72
			¶ 314-2
		AD589T	**★2842**
			3236-73
			¶ 314-2
		AD589U	**★2842**
			3236-74
			¶ 314-2
	Signetics	NE589	2662-56
58981	Mitsubishi	M58981-45	3777-12
590	AD	AD590I	3238-119
		AD590J	3238-120
		AD590K	3238-121
		AD590L	3238-122
		AD590M	3238-123
	Intersil	AD590I	3238-124
		AD590J	3238-125
		AD590K	3238-126
		AD590L	3238-127
		AD590M	3238-128
	Motorola	MHW590	3156-47
	SBE	590	1961-10
	Siemens	SAS590	3173-106
	Signetics	**NE590**	**★3625**
			2679-1
	Signetics	NE590	1354-95
		SE590	2679-3
5900	**Harris**	**HI5900-2**	**★2975**
			3232-130
			¶ 267-6
			¶ 285-8
		HI5900-5	**★2975**
			3232-131
			¶ 267-6
			(Continued)

Base Number	Source	Device	Page-Line
5900	**Harris**	**HI5900-5**	¶ 285-8
	Plessey	**CLA5900**	**★4817**
5901	GI	ER5901	3758-30
	Harris	**HI5901-2**	**★2977**
			3233-1
		HI5901-5	**★2977**
			3233-2
5902	OEI	5902	3235-125
591	Motorola	MHW591	3156-48
	Signetics	**NE591**	**★3625**
			2679-2
	Signetics	NE591	1354-96
5910	Reticon	R5910	3218-3
5911	MicroPwr	MP5911	3157-82
5912	MicroPwr	MP5912	3157-83
		MP5912C	3157-84
	Mostek	MK5912	3217-91
	SGS	M5912	3217-101
592	Motorola	MHW592	3156-49
		NE592	3156-92
		SE592	3156-93
	NEC	uPC592	3165-127
	Signetics	**NE592**	**★3675**
			3156-112
		SE592	**★3675**
			3156-113
	TI	NE592	3156-123
		TL592	3156-124
593	Motorola	MHW593	3156-50
	TI	**TL593C**	**★ 541**
			3231-11
594	**AD**	**AD594A**	**★3356**
			3156-71
		AD594C	**★3356**
			3156-72
	Motorola	MHW594	3170-86
	Signetics	**NE594**	**★3623**
			2663-104
		SA594	**★3623**
			2663-105
	TI	**TL594C**	**★ 541**
			3231-12
		TL594M	**★ 541**
			3231-13
5945	TI	AC5945	3168-23
5947	TI	AC5947	2664-9
595	**AD**	**AD595A**	**★3356**
			3156-73
		AD595C	**★3356**
			3156-74
	Motorola	MHW595	3170-87
	NEC	uPC595	3172-125
	TI	TL595C	3231-14
596	NEC	uPC596	3172-126
5C6847	Mitsubishi	M5C6847-1	1353-16
5K4116	Mitsubishi	M5K4116-2	3768-88
		M5K4116-3	3768-105
5K4164	Mitsubishi	M5K4164-15	3769-72
		M5K4164-20	3769-98
5L2114	Mitsubishi	M5L2114L	3777-28
		M5L2114L-2	3776-62
		M5L2114L-3	3776-124
5L2716	Mitsubishi	M5L2716	3765-77
5L2732	Mitsubishi	M5L2732	3766-61
5L2764	Mitsubishi	M5L2764	3766-113
5L5101	Mitsubishi	M5L5101L-1	3773-82
5L8035	Mitsubishi	M5L8035	1273-8
5L8039	Mitsubishi	M5L8039	1344-14
		M5L8039-11	1273-9
		M5L8039-6	1273-10
		M5L8039-8	1273-11
5L8041	Mitsubishi	M5L8041A	1344-165
5L8048	Mitsubishi	M5L8048	1344-52
			1273-12
5L8049	Mitsubishi	M5L8049	1344-53
			1273-13
		M5L8049-6	1273-14
		M5L8049-8	1273-15
5L8085	Mitsubishi	M5L8085A	1346-99
			1273-16
5L8086	Mitsubishi	M5L8086	1349-18
5L80C49			
	Mitsubishi	M5L80C49	1344-54
			1273-17
5L8155	Mitsubishi	M5L8155	1347-24
5L8156	Mitsubishi	M5L8156	1347-25

Base Number	Source	Device	Page-Line
5L8212	Mitsubishi	M5L8212	1345-144
5L8216	Mitsubishi	M5L8216	1345-65
5L8228	Mitsubishi	M5L8228	1346-76
5L8243	Mitsubishi	M5L8243	1346-132
5L8251	Mitsubishi	M5L8251A	1346-144
5L8253	Mitsubishi	M5L8253-5	1347-2
5L8255	Mitsubishi	M5L8255A-5	1347-8
5L8257	Mitsubishi	M5L8257-5	1346-152
5L8259	Mitsubishi	M5L8259A	1346-164
5L8279	Mitsubishi	M5L8279	1345-156
		M5L8279-5	1345-157
5L8282	Mitsubishi	M5L8282	1349-98
5L8283	Mitsubishi	M5L8283	1349-91
5L8284	Mitsubishi	M5L8284A	1349-49
5L8286	Mitsubishi	M5L8286	1349-84
5L8287	Mitsubishi	M5L8287	1349-77
5L8288	Mitsubishi	M5L8288	1349-41
5L8289	Mitsubishi	M5L8289	1349-35
5L8748	Mitsubishi	M5L8748	1344-1
			1273-18
5M2167			
	Mitsubishi	M5M2167-55	3768-58
		M5M2167-70	3768-59
5M8050			
	Mitsubishi	M5M8050H	1273-19
5T4044	Mitsubishi	M5T4044-20	3780-37
		M5T4044-30	3780-89
5W1791			
	Mitsubishi	M5W1791-02	1353-68
5X08	Intersil	IM5X08-1	3774-115
6	**AMI**	**UA-6**	**★4619**
			4468-10
	Datel	**SHM-6MM**	**★2861**
			3237-188
	LSIComp	D6	589-169
	National	MF6	3232-27
	SiliconSys	**SCA-6**	**★3685**
			★4872
			4475-25
			★3685
			★4872
			3238-107
	TeledyneC	CAG6	2615-9
		CAG6-10	2615-11
		CDA6	2617-107
	Western	SMP-E6	1963-23
60	**Burr-Brown**	**ADC60-12**	**★2848**
			2630-36
		DAC60	**★2848**
		SHM60	**★2849**
	LSIComp	D60	589-171
	MCE	MCE60	3198-3
	MicroTech	SGA60	4462-14
600	AMD	MCA600	4460-23
	Burr-Brown	**OPA600/MIL**	**★2853**
			3180-163
		OPA600N	**★2853**
			3190-9
		OPA600U	**★2853**
			3195-17
		OPA600U/883B	
			★2853
			3195-18
		OPA600V/883B	**★2853**
			3190-10
		OPA600V/MIL	**★2853**
			3190-11
	Cybernetic	CY600	2679-33
			3232-129
			1354-98
	Elind	RP600	4353-10
	Inmos	IMSP600	1349-26
			1352-15
			1352-37
	LSILogic	**LCA600**	**★4762**
			4460-24
	MicroTech	SG600	4465-40
	Motorola	**MCA600ECL**	**★4796**
			4460-25
		MVME600	**★2044**
	National	MCA600ECL	4460-26
	Signetics	**ACE600**	**★4858**
			4460-6
	Unitrode	PIC600	3231-19
6000	CalDevices	CDI6000	4470-10
	Fairchild	**FGC6000**	**★4634**
			(Continued)

Base Number	Source	Device	Page-Line
6000	**Fairchild**	**FGC6000**	**4461-13**
	ITT	SAA6000	1338-6
	Omnibyte	OB6000	1961-17
6001	Fujitsu	MB6001	3217-69
	Telmos	**TM6001**	**★4877**
			4475-32
6002	Fujitsu	MB6002	3217-70
	ITT	SAA6002	3216-161
	Telmos	**TM6002**	**★4877**
			4475-34
6003	**Telmos**	**TM6003**	**★4877**
			4475-33
6004	Panasonic	MN6004	3167-69
	Telmos	**TM6004**	**★4877**
			4475-35
6005	Panasonic	MN6005	3167-70
	Telmos	**TM6005**	**★4877**
			4475-31
601	Motorola	MHW601	3156-51
	SGS	L601	3158-131
	TeledyneC	CAM601A	2623-24
	TI	TL601C	2618-96
		TL601I	2618-92
		TL601M	2618-93
	Unitrode	PIC601	3231-20
6010	Hughes	HCTR6010	577-62
6012	**AMD**	**AM6012C**	**★3301**
			2650-28
			¶ 279-13
		AM6012M	**★3301**
			2650-29
			¶ 279-13
	MCE	MCE6012C	2650-30
		MCE6012M	2650-31
	Raytheon	**DAC-6012AC**	**★3590**
			2655-19
		DAC-6012AM	**★3590**
			2655-20
		DAC-6012C	**★3590**
			2655-21
		DAC-6012M	**★3590**
			2655-22
	Signetics	**AM6012**	**★3605**
			2655-36
60150	**RCA**	**MA60150**	**★4824**
			4467-16
602	DataGen	MN602	1352-31
		mN602	1285-2
	Motorola	MHW602	3156-52
	SGS	L602	3158-132
	Unitrode	PIC602	3231-21
6020	**AD**	**AD6020K**	**★2839**
			2625-10
	Siemens	SDA6020	2625-12
6021	Panasonic	MN6021	3169-39
6025	Panasonic	MN6025	3169-40
60250	**RCA**	**MA60250**	**★4824**
			4467-18
603	Dionics	DI603A	2663-37
	Motorola	MHW603	3156-53
	NEC	uPC603	2638-20
	SGS	L603	3158-133
6031	Panasonic	MN6031	640-48
6032	Panasonic	MN6032	641-54
604	Dionics	DI604A	2663-38
	SGS	L604	3158-134
	TeledyneC	CAM604A	2617-82
	TI	TL604C	2618-90
		TL604I	2618-88
		TL604M	2618-89
6040	Panasonic	MN6040	3214-123
		MN6040A	3214-124
		MN6040Z	3214-125
60400	**RCA**	**MA60400**	**★4824**
			4467-21
6044	Panasonic	MN6044	3171-61
6049	Panasonic	MN6049	3171-62
605	**Burr-Brown**	**OPA605**	**★2851**
			3176-94
			3180-124
		OPA605A	**★2851**
			3187-58
		OPA605B	**★2851**
			3185-48
		OPA605C	**★2851**
			3185-46
			(Continued)

Arranged alphanumerically from left to right.

Base Number	Source	Device	Page-Line
605	**Burr-Brown**	**OPA605H**	★ **2851**
			3187-59
		OPA605J	★ **2851**
			3185-49
		OPA605K	★ **2851**
			3185-47
	Dionics	DI605A	2663-39
	Motorola	**MVME605**	★ **2044**
	Panasonic	AN605	641-121
6055	MMI	6055	3755-10
60550	**RCA**	**MA60550**	★ **4824**
			4467-24
6056	MMI	6056	3755-17
6057	Panasonic	MN6057	3166-143
6059	Panasonic	MN6059	3166-144
606	MicroTech	606	4469-21
6061	MMI	6061	3755-18
	Panasonic	MN6061A	3170-7
6062	MMI	6062	3755-19
6063	Panasonic	MN6063	3170-54
6064	Panasonic	MN6064	3170-55
60650	**RCA**	**PA60650**	★ **4824**
			4466-23
607	Panasonic	AN607	3156-96
	TI	TL607C	2618-97
		TL607I	2618-94
		TL607M	2618-95
6070	AMD	AM6070AC	2643-19
			2656-31
		AM6070AM	2643-20
			2656-32
		AM6070C	2643-24
			2656-34
		AM6070M	2643-25
			2656-35
6071	MMI	6071	3755-34
6072	AMD	AM6072C	2643-17
			2656-29
		AM6072M	2643-18
			2656-30
	MMI	6072	3755-35
6076	Panasonic	MN6076	3166-95
6078	RCA	CA6078A	3190-56
608	**Datel**	**DAC-608**	★ **2863**
	Panasonic	AN608	3156-97
6080	AMD	AM6080AC	2639-36
		AM6080AM	2639-37
		AM6080C	2640-50
		AM6080M	2640-51
	Panasonic	MN6080	3166-65
60800	**RCA**	**MA60800**	★ **4824**
			4467-26
6081	AMD	AM6081AC	2639-38
		AM6081AM	2639-39
		AM6081C	2640-52
		AM6081M	2640-53
6082	AMD	AM6082C	2649-13
6086	**MMI**	**6086**	★ **819**
			627-101
	MMI	6086	3756-5
6087	**MMI**	**6087**	★ **819**
			627-102
	MMI	6087	3756-6
6092	Panasonic	MN6092	3166-96
6093	Panasonic	MN6093	3166-145
61	Hitachi	HD61J	4463-26
		HD61K	4463-27
		HD61L	4463-28
		HIT	4463-29
	Siemens	SM61C	3216-105
610	**Datel**	**DAC-610**	★ **2863**
	Motorola	**MVME610**	★ **2044**
	NEC	uPC610	2647-25
	Panasonic	AN610	3232-80
	Plessey	SL610C	3156-102
	TI	TL610C	2615-24
		TL610I	2615-22
		TL610M	2615-23
	Unitrode	PIC610	3231-22
6100	**Harris**	**HM6100**	★ **1488**
			1283-25
			¶ 269-4
			¶ 269-5
			¶ 275-18
		HM6100-2	★ **1488**
			1350-46
			(Continued)

Base Number	Source	Device	Page-Line
6100	**Harris**	**HM6100-2**	¶ 269-4
			¶ 269-5
			¶ 275-18
		HM6100C-9	★ **1488**
			1350-47
			¶ 269-4
			¶ 269-5
			¶ 275-18
	Intersil	IM6100	1283-26
			¶ 266-7
		IM6100-1I	1350-48
			¶ 266-7
		IM6100-1M	1350-49
			¶ 266-7
		IM6100AI	1350-50
			¶ 266-7
		IM6100AM	1350-51
			¶ 266-7
		IM6100I	1350-52
			¶ 266-7
	TI	**TMS6100**	★ **1718**
			3169-111
	Toshiba	TD6100	611-107
61001	TI	VM61001	3169-74
61002	**TI**	**VM61002**	★ **1718**
			3169-75
61003	**TI**	**VM61003**	★ **1718**
			3169-76
61004	**TI**	**VM61004**	★ **1718**
			3169-77
61005	**TI**	**VM61005**	★ **1718**
			3169-78
61006	**TI**	**VM61006**	★ **1718**
6101	**Harris**	**HD6101-2**	★ **1488**
			1350-70
		HD6101-9	★ **1488**
			1350-71
		HD6101C-9	★ **1488**
			1350-72
	Intersil	IM6101-1I	1350-73
		IM6101-1M	1350-74
		IM6101AI	1350-75
		IM6101AM	1350-76
		IM6101I	1350-77
	NEC	**μPB6101**	★ **4804**
			4465-14
6102	Intersil	IM6102-1I	1350-65
		IM6102-1M	1350-66
		IM6102AI	1350-67
		IM6102AM	1350-68
		IM6102I	1350-69
	NEC	**μPB6102**	★ **4804**
			4465-15
	Toshiba	TD6102	3214-63
			3215-58
6103	Intersil	IM6103AI	1350-97
		IM6103AM	1350-98
		IM6103C	1350-99
		IM6103I	1350-100
		IM6103M	1350-101
	NEC	**μPB6103**	★ **4804**
6104	Toshiba	TD6104	3168-117
6108	**AMD**	**AM6108**	★ **3303**
			2626-5
	Intersil	**IH6108C**	★ **3035**
			2623-71
		IH6108M	★ **3035**
			2623-64
611	Plessey	SL611C	3156-103
	Unitrode	PIC611	3231-23
6110	NEC	uPB6110	4463-20
6112	**AMD**	**AM6112**	★ **3306**
			2634-25
6116	Hitachi	HM6116-10	3778-10
		HM6116-15	3778-52
		HM6116-2	3778-28
		HM6116-20	3778-94
		HM6116-3	3778-53
		HM6116-4	3778-95
		HM6116L-2	3778-29
		HM6116L-4	3778-96
	Intersil	**IH6116C**	★ **3037**
			2624-70
		IH6116M	★ **3037**
			2624-71
	MicroPwr	MP6116-20	3778-98
			(Continued)

Base Number	Source	Device	Page-Line
6116	MicroPwr	MP6116-25	3779-2
		MP6116S-1	3777-118
		MP6116S-12	3778-34
		MP6116S-15	3778-59
	Mostek	MKB6116-82	3778-62
		MKB6116-83	3778-104
		MKB6116-84	3779-8
		MKB6116L-82	3778-63
		MKB6116L-83	3778-105
		MKB6116L-84	3779-9
	Motorola	**MCM6116-12**	★ **4046**
			3778-37
		MCM6116-15	★ **4046**
			3778-64
		MCM6116-20	★ **4046**
			3778-106
	Nitron	NC6116	3777-121
	RCA	**CDM6116-1**	★ **1594**
			3779-12
		CDM6116-2	★ **1594**
			3778-111
		CDM6116A-3	★ **1594**
			3778-68
		CDM6116A-9	★ **1594**
			3779-13
	SSS	SCM6116-2	3778-39
		SCM6116-3	3778-69
		SCM6116-4	3778-117
	Sprague	UDN-6116	2663-61
6116L120			
	IDT	**IDT6116L120**	★ **3982**
			3778-30
			3778-31
6116L150			
	IDT	**IDT6116L150**	★ **3982**
			3778-55
			3778-56
6116L90			
	IDT	**IDT6116L90**	★ **3982**
			3778-6
			3778-7
6116S120			
	IDT	**IDT6116S120**	★ **3982**
			3778-32
			3778-33
6116S150			
	IDT	**IDT6116S150**	★ **3982**
			3778-57
			3778-58
6116S70			
	IDT	**IDT6116S70**	★ **3982**
			3777-117
6116S90			
	IDT	**IDT6116S90**	★ **3982**
			3778-8
			3778-9
6117	Hitachi	HM6117-3	3778-54
		HM6117-4	3778-97
	MicroPwr	MP6117-20	3778-99
		MP6117-25	3779-3
		MP6117S-1	3777-119
		MP6117S-12	3778-35
		MP6117S-15	3778-60
	RCA	**CDM6117-1**	★ **1594**
			3779-14
		CDM6117-2	★ **1594**
			3778-112
6118	**Exar**	**XR6118**	★ **3376**
			2663-102
	MicroPwr	MP6118-20	3778-100
		MP6118-25	3779-4
		MP6118S-1	3777-120
		MP6118S-12	3778-36
		MP6118S-15	3778-61
	RCA	**CDM6118-1**	★ **1594**
			3779-15
		CDM6118-2	★ **1594**
			3778-113
	SiliconG	SG6118	2663-106
	Sprague	UDN-6118	2663-107
612	**Datel**	**DAC-612**	★ **2863**
	Panasonic	AN612	3232-81
	Plessey	SL612C	3156-104
	RTC	MS612	592-9
			3791-50
	Unitrode	PIC612	3231-24

Base Number	Source	Device	Page-Line
6120	**Harris**	**HD6120**	★ **1489**
			1283-24
		HD6120-2	★ **1489**
			1350-44
		HD6120-9	★ **1489**
			1350-45
61200	**RCA**	**PA61200**	★ **4824**
			4466-25
6121	**Harris**	**HD6121-2**	★ **1489**
			1350-63
		HD6121-9	★ **1489**
			1350-64
6125	OEI	6125A	3234-36
	TI	**TMS6125**	★ **1718**
			3169-112
61256	Hitachi	HN61256	3787-101
			3787-102
6126	Sprague	UDN-6126	2663-62
6128	**Exar**	**XR6128**	★ **3376**
			2663-103
	Sprague	UDN-6128	2663-108
613128	Hitachi	HN613128	3786-127
613256	Hitachi	HN613256	3787-61
6135	Panasonic	AN6135	3164-68
61364	Hitachi	HN61364	3786-37
61365	Hitachi	HN61365	3786-32
61366	Hitachi	HN61366	3786-33
6138	Sprague	UDN-6138	2663-109
614	Panasonic	AN614	3170-46
6142	Panasonic	MN6142	3214-126
6147	Hitachi	HM6147	3779-108
		HM6147-3	3779-78
		HM6147-45	3779-67
		HM6147-55	3779-79
		HM6147-6	3780-4
		HM6147H-35	3779-55
		HM6147L	3779-109
	Motorola	**MCM6147-55**	★ **4046**
			3779-80
		MCM6147-70	★ **4046**
			3779-110
6148	**AMD**	**AM6148**	★ **3303**
			2626-6
	Hitachi	HM6148	3775-123
		HM6148-35	3775-80
		HM6148-45	3775-87
		HM6148-55	3775-103
		HM6148-6	3776-16
		HM6148L	3775-124
	Sprague	UDN-6148	2663-110
615	**Motorola**	**MVME615**	★ **2044**
6155	MMI	6155	3755-11
6156	MMI	6156	3755-20
616	MicroTech	616	4469-22
	Motorola	**MVME616**	★ **2044**
	Panasonic	AN616	3170-47
6161	MMI	6161	3755-21
6162	MMI	6162	3755-22
6164	Sprague	UDN-6164A	2663-42
6167	Hitachi	HM6167	3782-41
		HM6167-45	3782-16
		HM6167-55	3782-25
		HM6167-6	3782-55
		HM6167-8	3782-64
		HM6167L-6	3782-56
		HM6167L-8	3782-65
6167L100			
	IDT	**IDT6167L100**	★ **3988**
			3782-68
			3782-69
6167L45			
	IDT	**IDT6167L45**	★ **3988**
			3782-17
6167L55			
	IDT	**IDT6167L55**	★ **3988**
			3782-26
6167L70			
	IDT	**IDT6167L70**	★ **3988**
			3782-42
6167L85			
	IDT	**IDT6167L85**	★ **3988**
			3782-57
6167S100			
	IDT	**IDT6167S100**	★ **3988**
			3782-66

¶ Indicates page number in Application Note Directory.
★ Indicates addition data is provided on the page noted.

Base Number	Source	Device	Page-Line
6167S45			
	IDT	**IDT6167S45**	★**3988**
			3782-18
6167S55			
	IDT	**IDT6167S55**	★**3988**
			3782-28
			3782-29
6167S70			
	IDT	**IDT6167S70**	★**3988**
			3782-43
6167S85			
	IDT	**IDT6167S85**	★**3988**
			3782-59
6168	**Hitachi**	**HM6168-45**	★**3972**
			3781-5
		HM6168-55	★**3972**
			3781-22
		HM6168-70	★**3972**
			3781-44
		HM6168H-45	★**3972**
			3781-6
		HM6168H-55	★**3972**
			3781-23
		HM6168H-70	★**3972**
			3781-45
	Zilog	05-6168-01	1965-35
6168L100			
	IDT	**IDT6168L100**	★**3993**
			3781-84
			3781-85
6168L45			
	IDT	**IDT6168L45**	★**3993**
			3781-7
			3781-8
6168L55			
	IDT	**IDT6168L55**	★**3993**
			3781-24
			3781-25
6168L70			
	IDT	**IDT6168L70**	★**3993**
			3781-46
			3781-47
6168L85			
	IDT	**IDT6168L85**	★**3993**
			3781-71
			3781-72
6168S100			
	IDT	**IDT6168S100**	★**3993**
			3781-86
6168S45			
	IDT	**IDT6168S45**	★**3993**
			3781-9
			3781-10
6168S55			
	IDT	**IDT6168S55**	★**3993**
			3781-26
			3781-27
6168S70			
	IDT	**IDT6168S70**	★**3993**
			3781-48
			3781-49
6168S85			
	IDT	**IDT6168S85**	★**3993**
			3781-73
			3781-74
6170	Motorola	MC6170	3218-10
6171	MMI	6171	3755-36
6172	MMI	6172	3755-37
	Motorola	**MC6172**	★**3536**
			3217-60
			¶ 298-5
6173	**Motorola**	**MC6173**	★**3536**
			3218-34
			¶ 298-5
6174	Teltone	TT6174	3219-4
6177	Teltone	TT6177	3216-39
618	RTC	MS618	592-21
			3757-15
6190	Motorola	MC6190	3170-29
			3172-69
6191	Motorola	MC6191	3170-30
			3172-70
6192	Motorola	MC6192	3170-31
			3172-71
6193	Motorola	MC6193	3170-32
			3172-72
6194	Motorola	MC6194	3170-33
			3172-73
6195	Motorola	MC6195	3170-34
			3214-112
6196	Motorola	MC6196	3170-35
			3214-113
61L16	Motorola	MCM61L16-12	3778-38
		MCM61L16-15	3778-65
		MCM61L16-20	3778-107
61L47	Motorola	MCM61L47-55	3779-81
		MCM61L47-70	3779-111
62	**Burr-Brown**	**VFC62**	★**2849**
			3233-109
		VFC62B	★**2849**
			3233-110
		VFC62C	★**2849**
			3233-111
		VFC62S	★**2849**
			3233-112
620	**Motorola**	**MVME620**	★**2044**
	Plessey	SL620C	3155-5
6200	Panasonic	MN6200	3166-146
6201	Intersil	IH6201C	2681-35
		IH6201M	2681-36
6202	**OKI**	**MSM6202**	★**4118**
			3169-108
6208	**Intersil**	**IH6208C**	★**3039**
			2622-108
		IH6208M	★**3039**
			2622-103
621	Plessey	SL621C	3155-4
6212	National	SCX6212	4461-14
6216	**Intersil**	**IH6216C**	★**3040**
			2624-21
		IH6216M	★**3040**
			2624-22
622	Telefunken	U622BS	640-72
6224	National	SCX6224	4461-15
6225	National	SCX6225	4461-16
623	Plessey	SL623C	3167-125
62301	Hitachi	HN62301	3787-105
624	**AD**	**AD624A**	★**3355**
			3155-103
			3184-54
		AD624B	★**3355**
			3155-104
			3183-11
		AD624C	★**3355**
			3155-105
			3182-15
		AD624S	★**3355**
			3155-106
			3183-37
	NEC	uPC624	2640-39
	Telefunken	U624BS	641-16
6248	National	SCX6248	4461-17
6249	Panasonic	AN6249	3169-152
625	**Motorola**	**MVME625**	★**2044**
	RTC	MS625	592-22
			3791-80
	Unitrode	PIC625	3231-25
6250	Panasonic	AN6250	3169-153
6251	Panasonic	AN6251	3170-1
		MN6251	3166-147
6252	Panasonic	MN6252	3166-148
6255	MMI	6255-1	3783-80
6256	MMI	6256-1	3783-81
	Motorola	**MCM6256-10**	★**4051**
			3769-129
		MCM6256-20	★**4051**
			3770-5
			3770-18
626	MicroTech	626	4469-23
	Telefunken	U626BS	641-35
	Unitrode	PIC626	3231-26
6260	MMI	6260-1	3783-76
	National	SCX6260	4461-18
6261	MMI	6261-1	3783-77
6264	**Hitachi**	**HM6264-10**	★**3973**
			3781-99
		HM6264-12	★**3973**
			3781-104
		HM6264-15	★**3973**
			3781-110
627	Unitrode	PIC627	3231-27
6270	Plessey	SL6270	3155-6
6275	MMI	6275-1	3783-109
6276	MMI	6276-1	3783-110
6280	MMI	6280-1	3783-36
		6280-2	3783-30
6281	MMI	6281-1	3783-38
		6281-2	3783-31
6282	MMI	6282-1	3783-37
6283	MMI	6283-1	3783-39
629	DataGen	MN629	1352-33
6290	MMI	6290	3783-90
6291	MMI	6291	3783-91
6292	MMI	6292	3783-110
6293	MMI	6293	3783-111
63	**Burr-Brown**	**DAC63**	★**2848**
			2648-48
			¶ 281-1
		DAC63S	★**2848**
			2649-1
			¶ 281-1
630	**AD**	**AD630**	★**3361**
			3232-75
6300	**AMD**	**AM6300**	★**3312**
			3235-136
	Lambda	LAS6300	3230-51
			¶ 313-13
			¶ 313-14
			¶ 313-15
		LAS6300L	3230-52
			¶ 313-13
			¶ 313-14
			¶ 313-15
	MMI	6300-1	3760-93
	Panasonic	AN6300	3170-25
6301	**AMD**	**AM6301**	★**3315**
			3230-24
	Hitachi	HD6301	1271-3
	Lambda	LAS6301	3230-53
	MMI	6301-1	3760-97
	NEC	**μPB6301**	★**4799**
			4460-18
	Toshiba	TD6301A	3167-137
6302	Lambda	LAS6302	3230-54
6303	Hitachi	HD6303	1342-62
			1271-4
6304	Toshiba	TD6304	3169-127
6305	MMI	6305-1	3761-51
6306	MMI	6306-1	3761-54
	Motorola	HCA6306	4466-22
	National	SCX6306	4463-3
6308	MMI	6308-1	3761-11
	Toshiba	TD6308	3169-128
6309	MMI	6309-1	3761-14
6310	**NEC**	**μPB6310**	★**4799**
			4460-19
	Plessey	SL6310	3155-138
63102	DDC	BUS63102	2686-85
63105	DDC	BUS-63105	2686-39
6312	Intersil	IM6312-1I	3783-86
		IM6312-1M	3783-87
		IM6312AI	3783-84
		IM6312AM	3783-85
		IM6312I	3783-88
		IM6312M	3783-89
	Motorola	HCA6312	4466-24
	National	SCX6312	4463-4
63128	**Motorola**	**MCM63128-15**	★**4048**
			★**4055**
			★**4056**
			3786-113
		MCM63128-20	★**4048**
			★**4055**
			★**4056**
			3786-114
6316	Intersil	IM6316I	3784-1
		IM6316M	3784-2
6320	**NEC**	**μPB6320**	★**4799**
			4460-20
	Panasonic	AN6320	3170-14
6321	Panasonic	AN6321	3170-12
6324	Motorola	HCA6324	4466-28
	National	SCX6324	4463-5
6325	National	SCX6325	4463-6
63256	**Motorola**	**MCM63256-15**	★**4048**
			★**4055**
			★**4056**
			3787-48
			(Continued)
63256	**Motorola**	**MCM63256-20**	★**4048**
			★**4055**
			★**4056**
			3787-54
6330	Lambda	LAS6330	3230-55
	MMI	6330-1	3760-39
	Panasonic	AN6330	3170-15
6331	Lambda	LAS6331	3230-56
	MMI	6331-1	3760-45
	Panasonic	AN6331	3170-13
6332	Lambda	LAS6332	3230-57
6333	Hitachi	HD6333	1271-5
6335	MMI	6335-1	3761-13
6336	MMI	6336-1	3761-17
6340	MMI	6340-1	3762-28
6341	MMI	6341-1	3762-36
		6341-2	3761-125
	Panasonic	AN6341	3170-22
6342	Panasonic	AN6342	3170-23
6344	Panasonic	AN6344	3170-24
6348	MMI	6348-1	3762-25
	Motorola	HCA6348	4466-30
	National	SCX6348	4463-7
6349	MMI	6349-1	3762-29
		6349-2	3761-122
635	Unitrode	PIC635	3231-28
6350	MMI	6350-1	3762-111
6351	MMI	6351-1	3762-116
6352	MMI	6352-1	3762-112
6353	MMI	6353-1	3762-117
		6353-2	3762-107
636	**AD**	**AD636J**	★**3359**
			★**3363**
			3237-150
		AD636K	★**3359**
			★**3363**
			3237-151
	DataGen	MN636	1352-34
	MicroTech	636	4469-24
	Telefunken	U636BS	641-36
	Unitrode	PIC636	3231-29
6360	National	SCX6360	4463-8
6364	**Synertek**	**SY6364**	★**4211**
6365	**Synertek**	**SY6365**	★**4211**
			3785-68
637	**AD**	**AD637J**	★**3360**
			★**3363**
			3237-152
		AD637K	★**3360**
			★**3363**
			3237-153
	Unitrode	PIC637	3231-30
6376	National	DH6376C	3157-155
6380	MMI	6380-1	3763-98
		6380-2	3763-74
6381	MMI	6381-1	3763-101
		6381-2	3763-56
6388	MMI	6388-1	3764-50
6389	MMI	6389-1	3764-54
		6389-2	3764-38
63D1641			
	MMI	**63D1641**	★**4041**
			3765-96
63L05	Hitachi	HD63L05	1271-6
63LS140			
	MMI	63LS140	3760-94
63LS141			
	MMI	63LS141	3760-98
63LS240			
	MMI	63LS240	3761-52
63LS241			
	MMI	63LS241	3761-55
63RA1681			
	MMI	**63RA1681**	★**4035**
			3764-95
		63RA1681A	★**4035**
			3764-78
63RA441			
	MMI	**63RA441**	★**4030**
			3762-92
63RS1681			
	MMI	**63RS1681**	★**4038**
			3764-96
		63RS1681A	★**4038**
			3764-79

Arranged alphanumerically from left to right.

© IC MASTER 1984

Base Number	Source	Device	Page-Line
63RS881			
	MMI	63RS881	3763-34
63S080	**MMI**	**63S080**	★4026
			4482-85
	MMI	63S080	3760-21
63S081	**MMI**	**63S081**	★4026
			4482-86
	MMI	63S081	3760-23
63S140	**MMI**	**63S140**	★4026
			3760-79
63S141	**MMI**	**63S141**	★4026
			3760-82
63S1641			
	MMI	**63S1641**	★4026
			3765-107
		63S1641A	★4026
			4482-89
	MMI	63S1641A	3765-92
63S1681			
	MMI	**63S1681**	★4026
			3764-125
		63S1681A	★4026
			3764-88
63S240	**MMI**	**63S240**	★4026
			3761-31
63S241	**MMI**	**63S241**	★4026
			3761-32
63S3281			
	MMI	**63S3281**	★4026
63S441	**MMI**	**63S441**	★4026
			3762-89
		63S441A	★4026
			4482-81
	MMI	63S441A	3762-73
63S841	**MMI**	**63S841**	★4026
			3764-29
		63S841A	★4026
			4482-83
	MMI	63S841A	3764-11
64	**Cromemco**	**64FDC**	★2027
		64KZ-H	★2013
	Fairchild	F64K-12	3769-42
		F64K-15	3769-60
		F64K-20	3769-89
	MicroTech	CCD64	3232-56
	Oliver	**OMNI64**	★4401
	Panasonic	MEL64A	3234-58
	Reticon	RL64A	3234-87
		RL64W	3234-88
		RO64	3234-42
640	GI	SPB640	3169-86
	Plessey	SL640C	3232-82
6400	Supertex	CM6400	3786-103
		CM6400-3	3786-104
		CM6400A-3	3786-105
		MM6400	3786-106
		MM6400A	3786-107
64000	HP	HP64000	1811-16
6401	National	SHM6401	3238-51
6402	**Harris**	**HD6402-2**	★1492
			2686-71
	Harris	HD6402-2	1350-79
	Harris	**HD6402-9**	★1492
			2686-72
	Harris	HD6402-9	1350-80
	Harris	**HD6402C-9**	★1492
			2686-68
	Harris	HD6402C-9	1350-81
	Intersil	**IM6402**	★3041
			2686-73
	Intersil	IM6402	1350-82
	Intersil	**IM6402-11**	★3041
			1350-83
		IM6402-1M	★3041
			1350-84
		IM6402AI	★3041
			1350-85
		IM6402AM	★3041
			1350-86
		IM6402M	★3041
			2686-74
	RCA	**CDP6402**	★1595
			593-5
		CDP6402D	★1595
			2686-77
		CDP6402E	★1595
			(Continued)

Base Number	Source	Device	Page-Line
6402	**RCA**	**CDP6402E**	**2686-78**
	Sanyo	LM6402	1338-7
6403	**Intersil**	**IM6403**	★3041
			2686-75
	Intersil	IM6403	1350-87
	Intersil	**IM6403-11**	★3041
			1350-88
		IM6403AI	★3041
			1350-89
		IM6403AM	★3041
			1350-90
		IM6403M	★3041
			2686-76
6404	National	NMC6404-9	3780-73
6405	Sanyo	LM6405	1338-8
6406	**Harris**	**HD6406**	★1492
			★1495
			2686-66
			★1492
			★1495
			1350-78
6408	**Harris**	**HD6408**	★1492
			★1496
			2685-22
		HD6408-9	★1492
			★1496
			592-42
6409	**Harris**	**HD6409**	★1493
			★1497
			592-128
			¶ 286-12
		HD6409-2	★1493
			★1497
			2685-93
			¶ 286-12
		HD6409-9	★1493
			★1497
			2685-94
			¶ 286-12
641	Fairchild	TBA641	3164-78
	Plessey	SL641C	3232-83
64100	DDC	BUS-64100	2686-7
642	**AD**	**AD642J**	★3351
			3205-9
		AD642K	★3351
			3204-43
		AD642L	★3351
			3204-9
		AD642S	★3351
			3204-44
6431	**Harris**	**HD6431-2**	★1490
			579-105
	Harris	HD6431-2	1350-55
	Harris	**HD6431-9**	★1490
			579-106
	Harris	HD6431-9	1350-56
6432	**Harris**	**HD6432-2**	★1490
			579-103
	Harris	HD6432-2	1350-53
	Harris	**HD6432-9**	★1490
			579-104
	Harris	HD6432-9	1350-54
6433	**Harris**	**HD6433-2**	★1490
			579-107
	Harris	HD6433-2	1350-61
	Harris	**HD6433-9**	★1490
			579-108
	Harris	HD6433-9	1350-62
6434	**Harris**	**HD6434-2**	★1490
			1350-59
		HD6434-9	★1490
			1350-60
6435	Harris	HD6435-2	1350-57
		HD6435-9	1350-58
6436	**Harris**	**HD6436-2**	★1491
			1350-93
		HD6436-9	★1491
			1350-94
644	**AD**	**AD644J**	★3351
			3205-10
		AD644K	★3351
			3204-45
		AD644L	★3351
			3204-8
		AD644S	★3351
			3204-10

Base Number	Source	Device	Page-Line
6440	**Harris**	**HD6440-2**	★1491
			580-34
	Harris	HD6440-2	1350-95
	Harris	**HD6440-9**	★1491
			580-35
	Harris	HD6440-9	1350-96
645	Signetics	NE645	3164-57
	Unitrode	PIC645	3231-31
646	MicroTech	646	4469-25
	Signetics	NE646	3164-58
	Unitrode	PIC646	3231-32
647	**AD**	**AD647J**	★3350
			★3351
			3204-48
		AD647K	★3350
			★3351
			3204-5
		AD647L	★3350
			★3351
			3203-53
		AD647S	★3350
			★3351
			3204-6
		AD647S/883B	★3350
			★3351
			3204-7
	Unitrode	PIC647	3231-33
648	NEC	uPC648	2650-21
	Signetics	NE648	3164-59
6482	Motorola	MC6482	606-90
		MC6482A	606-91
		MC6482B	606-92
649	NEC	uPC649	3238-52
	Signetics	NE649	3164-60
6495	**Harris**	**HD6495-2**	★1491
			580-32
	Harris	HD6495-2	1350-91
	Harris	**HD6495-9**	★1491
			580-33
	Harris	HD6495-9	1350-92
64LS299			
	TI	SN64LS299	3790-10
65	RCIData	CMC65/04	1959-7
	Rockwell	RM65-1000	1959-4
		SYSTEM65	1817-5
650	**AD**	**AD650**	★2840
			3239-23
		AD650J	★2840
			3239-48
		AD650K	★2840
			3239-49
		AD650S	★2840
			3239-50
	Plessey	SL650	3215-19
			¶ 310-8
	Signetics	NE650	3164-61
6500	Cubit	6500	1957-37
	Rockwell	6500	1817-3
		R6500	1341-82
			¶ 267-12
			¶ 267-14
			¶ 268-13
			¶ 270-4
			¶ 274-1
			1279-16
			¶ 267-12
			¶ 267-14
			¶ 268-13
			¶ 270-4
			¶ 274-1
		R6500/1	1279-17
			¶ 260-12
			¶ 264-2
			¶ 267-12
			¶ 267-14
			¶ 268-13
			¶ 270-4
			¶ 274-1
			¶ 288-1
		R6500/1-10	1341-60
			¶ 267-12
			¶ 267-14
			¶ 268-13
			¶ 270-4
			¶ 274-1
		R6500/11	1341-61
			(Continued)

Base Number	Source	Device	Page-Line
6500	Rockwell	R6500/11	¶ 267-12
			¶ 267-14
			¶ 268-13
			¶ 270-4
			¶ 274-1
			1279-18
			¶ 267-12
			¶ 267-14
			¶ 268-13
			¶ 270-4
			¶ 274-1
		R6500/12	1341-62
			¶ 267-12
			¶ 267-14
			¶ 268-13
			¶ 270-4
			¶ 274-1
			1279-19
			¶ 267-12
			¶ 267-14
			¶ 268-13
			¶ 270-4
			¶ 274-1
		R6500/13	1341-63
			¶ 267-12
			¶ 267-14
			¶ 268-13
			¶ 270-4
			¶ 274-1
			1279-20
			¶ 267-12
			¶ 267-14
			¶ 268-13
			¶ 270-4
			¶ 274-1
		R6500/1E	1341-132
			¶ 267-12
			¶ 267-14
			¶ 268-13
			¶ 270-4
			¶ 274-1
		R6500/41	1279-21
			¶ 267-12
			¶ 267-14
			¶ 268-13
			¶ 270-4
			¶ 274-1
		R6500/42	1279-22
			¶ 267-12
			¶ 267-14
			¶ 268-13
			¶ 270-4
			¶ 274-1
		R6500/43	1279-23
			¶ 267-12
			¶ 267-14
			¶ 268-13
			¶ 270-4
			¶ 274-1
65002	**NEC**	**μPD65002**	★4809
			4466-52
65003	**NEC**	**μPD65003**	★4809
			4466-50
6501	AMI	S6501-8	3773-117
		S6501L	3773-108
		S6501L-3	3773-109
		S6501L-8	3773-118
65010	**NEC**	**μPD65010**	★4809
			4466-54
6501L1	AMI	S6501L1	3773-80
6502	CGRS	6502PDS-8	1809-13
		6502PDS-Mini	1809-14
	Rockwell	R6502	1341-83
			¶ 266-15
			¶ 275-10
			1279-24
			¶ 266-15
			¶ 275-10
	Synertek	**SY6502**	★1696
			1341-93
	Synertek	SY6502	1279-43
	Synertek	**SY6502A**	★1696
			1341-94
		SY6502B	★1696
			1341-95
			(Continued)

¶ Indicates page number in Application Note Directory.
★ Indicates addition data is provided on the page noted.

Base Number	Source	Device	Page-Line
6502	**Synertek**	**SY6502C**	★ **1696**
			1341-96
65020	**NEC**	**μPD65020**	★ **4809**
			4467-2
6503	National	NMC6503-5	3777-102
		NMC6503-9	3777-101
	Rockwell	R6503	1341-84
	Synertek	**SY6503**	★ **1696**
			1341-97
	Synertek	SY6503	1279-44
	Synertek	**SY6503A**	★ **1696**
			1341-98
6504	AMI	S6504	587-175
			3780-102
	Harris	**HM6504-2**	★ **3966**
			3780-69
		HM6504-5	★ **3966**
			3780-103
		HM6504-8	★ **3966**
			3780-70
		HM6504-9	★ **3966**
			3780-71
		HM6504B-2	★ **3966**
			3780-46
		HM6504B-8	★ **3966**
			3780-24
		HM6504B-9	★ **3966**
			3780-25
		HM6504C-9	★ **3966**
			3780-72
		HM6504S-2	★ **3966**
			3780-11
		HM6504S-8	★ **3966**
			3780-12
		HM6504S-9	★ **3966**
			3780-13
		HS6504RH	★ **4668**
			3780-23
	Intersil	IM6504C	3780-26
		IM6504M	3780-27
	MicroPwr	MP6504	3780-47
	National	NMC6504-2	3780-74
		NMC6504-5	3780-104
		NMC6504-9	3780-75
	Rockwell	R6504	1341-85
	SMOS	SRM6504	3780-48
	Synertek	**SY6504**	★ **1696**
			1341-99
	Synertek	SY6504	1279-45
	Synertek	**SY6504A**	★ **1696**
			1341-100
~~65040~~	~~NEC~~	~~uPD65040~~	~~4463-40~~
6504LP1			
	MicroPwr	MP6504LP1	3781-3
6505	Rockwell	R6505	1341-86
	Synertek	**SY6505**	★ **1696**
			1341-101
	Synertek	SY6505	1281-1
	Synertek	**SY6505A**	★ **1696**
			1341-102
6506	Rockwell	R6506	1341-87
	Synertek	**SY6506**	★ **1696**
			1341-103
	Synertek	SY6506	1281-2
	Synertek	**SY6506A**	★ **1696**
			1341-104
65060	**NEC**	**μPB65060**	★ **4809**
	NEC	uPD65060	4463-41
6507	Rockwell	R6507	1341-88
	Synertek	**SY6507**	★ **1696**
			1341-105
	Synertek	SY6507	1281-3
	Synertek	**SY6507A**	★ **1696**
			1341-106
6508	AMI	S6508	587-176
			3775-48
		S6508-1	3775-23
		S6508A	588-1
			3775-29
	Harris	**HM6508**	★ **3965**
			588-6
		HM6508-2	★ **3965**
			3774-126
		HM6508-5	★ **3965**
			3775-24
		HM6508-8	★ **3965**
			(Continued)

Base Number	Source	Device	Page-Line
6508	**Harris**	**HM6508-8**	**3775-1**
		HM6508-9	★ **3965**
			3775-2
		HM6508B-2	★ **3965**
			3774-112
		HM6508B-8	★ **3965**
			3774-113
		HM6508B-9	★ **3965**
			3774-114
		HS6508RH	★ **4675**
			3775-22
	Motorola	MCM6508	588-8
		MCM6508-25	3775-5
		MCM6508-30	3775-26
		MCM6508-40	3775-38
	National	NMC6508	588-14
651	Plessey	SL651	3215-18
			¶ 310-8
	Signetics	NE651	3164-62
6510	Sprague	UDN-6510A	2680-66
65100	**NEC**	**μPB65100**	★ **4809**
	NEC	uPD65100	4463-42
65101	DDC	BUS65101	2686-5
6511	Rockwell	R6511Q	1279-25
6512	Intersil	IM6512	587-170
		IM6512AI	3771-103
		IM6512AM	3771-104
		IM6512C	3771-107
		IM6512I	3771-105
		IM6512M	587-171
			3771-106
	Rockwell	R6512	1341-89
	Synertek	**SY6512**	★ **1696**
			1341-107
	Synertek	SY6512	1281-4
	Synertek	**SY6512A**	★ **1696**
			1341-108
65122	DDC	BUS65122	2686-95
6513	Rockwell	R6513	1341-90
	Synertek	**SY6513**	★ **1696**
			1341-109
	Synertek	SY6513	1281-5
	Synertek	**SY6513A**	★ **1696**
			1341-110
6514	AMI	S6514	3776-100
	Harris	**HM6514-2**	★ **3966**
			3776-101
		HM6514-5	★ **3966**
			3777-5
		HM6514-9	★ **3966**
			3776-102
		HM6514B-2	★ **3966**
			3776-82
		HM6514B-8	★ **3966**
			3776-83
		HM6514B-9	★ **3966**
			3776-43
		HM6514C-9	★ **3966**
			3776-103
		HM6514S-2	★ **3966**
			3776-23
		HM6514S-8	★ **3966**
			3776-24
		HM6514S-9	★ **3966**
			3776-25
		HS6514RH	★ **4682**
			3776-44
	Intersil	IM6514C	3776-41
		IM6514M	3776-42
	MicroPwr	MP6514	3776-85
	National	NMC6514-2	3776-105
		NMC6514-5	3777-6
		NMC6514-9	3776-106
	Rockwell	R6514	1341-91
	SMOS	SRM6514	3776-90
	Sprague	UDN-6514A	2680-67
			¶ 288-16
	Synertek	**SY6514**	★ **1696**
			1341-111
	Synertek	SY6514	1281-6
	Synertek	**SY6514A**	★ **1696**
			1341-112
6514LP1			
	MicroPwr	MP6514LP1	3777-54
6515	Rockwell	R6515	1341-92
	Synertek	**SY6515**	★ **1696**
			(Continued)

Base Number	Source	Device	Page-Line
6515	**Synertek**	**SY6515**	**1341-113**
	Synertek	SY6515	1281-7
	Synertek	**SY6515A**	★ **1696**
			1341-114
6516	AMI	S6516	588-2
			3778-49
	Harris	**HM6516-2**	★ **3966**
			3778-90
		HM6516-5	★ **3966**
			3778-91
		HM6516-8	★ **3966**
			3778-92
		HM6516-9	★ **3966**
			3778-93
		HM6516B-2	★ **3966**
			3778-23
		HM6516B-8	★ **3966**
			3778-24
		HM6516B-9	★ **3966**
			3778-25
	National	NMC6516	588-15
65162	**Harris**	**HM65162-2**	★ **3966**
			3777-124
		HM65162-5	★ **3966**
			3777-125
		HM65162-8	★ **3966**
			3777-126
		HM65162-9	★ **3966**
			3777-127
		HM65162B-2	★ **3966**
			3777-109
		HM65162B-5	★ **3966**
			3777-110
		HM65162B-8	★ **3966**
			3777-111
		HM65162B-9	★ **3966**
			3777-112
		HM65162C-2	★ **3966**
			3778-21
		~~HM65162C-8~~	~~★ 3966~~
			3778-22
		HM65162C-9	★ **3966**
			3777-128
		HM65162S-5	★ **3966**
			3777-104
		HM65162S-9	★ **3966**
			3777-105
65172	**Harris**	**HM65172-2**	★ **3967**
			3778-1
		HM65172-5	★ **3967**
			3778-2
		~~HM65172-8~~	~~★ 3967~~
			3778-3
		HM65172-9	★ **3967**
			3778-4
		HM65172B-2	★ **3967**
			3777-113
		HM65172B-5	★ **3967**
			3777-114
		HM65172B-8	★ **3967**
			3777-115
		HM65172B-9	★ **3967**
			3777-116
		HM65172C-2	★ **3967**
			3778-26
		HM65172C-8	★ **3967**
			3778-27
		HM65172C-9	★ **3967**
			3778-5
		HM65172S-5	★ **3967**
			3777-106
		HM65172S-9	★ **3967**
			3777-107
6518	**Harris**	**HM6518**	★ **3965**
			588-7
		HM6518-2	★ **3965**
			3775-7
		HM6518-5	★ **3965**
			3775-27
		HM6518-8	★ **3965**
			3775-8
		HM6518-9	★ **3965**
			3775-9
		~~HM6518B-2~~	~~★ 3965~~
			3774-117
		HM6518B-8	★ **3965**
			(Continued)

Base Number	Source	Device	Page-Line
6518	**Harris**	**HM6518B-8**	**3774-118**
		HM6518B-9	★ **3965**
			3774-119
	Motorola	MCM6518	588-9
		MCM6518-25	3775-12
		MCM6518-30	3775-28
		MCM6518-46	3775-49
	National	NMC6518	588-16
652	Plessey	SL652	3214-27
	Signetics	NE652	3164-63
6520	Rockwell	R6520	1341-141
			¶ 268-4
	Synertek	**SY6520**	★ **1696**
			1343-49
			1355-31
		SY6520A	★ **1696**
			1341-143
65201	DDC	BUS65201	2686-84
6521	**Synertek**	**SY6521**	★ **1696**
			1341-144
		SY6521A	★ **1696**
			1341-145
6522	Rockwell	R6522	1341-142
			¶ 267-9
			¶ 268-4
	Synertek	**SY6522**	★ **1696**
			1341-146
			1355-32
		SY6522A	★ **1696**
			1341-147
			1355-33
65256	Motorola	MCM65256	3787-68
		MCM65256-25	3787-69
65262	**Harris**	**HM65262**	★ **3967**
653	Signetics	NE653	3164-64
6530	Rockwell	R6530	1341-149
	Synertek	SY6530	1341-150
6531	Rockwell	R6531	1341-155
			¶ 275-10
6532	**Synertek**	**SY6532**	★ **1696**
			1341-152
		SY6532A	★ **1696**
			1341-153
654	Signetics	NE654	3164-65
6545	Rockwell	R6545	1341-130
			¶ 268-4
655	Unitrode	PIC655	3231-34
6550	**Panasonic**	**AN6550**	★ **3556**
			3208-40
6551	**AMI**	**S6551**	★ **1449**
			2685-1
		S6551A	★ **1449**
			2685-2
	Harris	**HM6551**	★ **3965**
			588-24
		HM6551-2	★ **3965**
			3773-36
		HM6551-5	★ **3965**
			3773-56
		HM6551-8	★ **3965**
			3773-37
		HM6551-9	★ **3965**
			3773-38
		HM6551B-2	★ **3965**
			3773-10
		HM6551B-8	★ **3965**
			3773-11
		HM6551B-9	★ **3965**
			3773-12
		HS6551RH	★ **4689**
			3773-19
	National	NMC6551	588-34
	~~Panasonic~~	~~AN6551~~	~~★ 3556~~
			3208-41
	RCA	CDP6551	1340-104
	Rockwell	R6551	1341-124
			¶ 267-11
			¶ 268-4
			¶ 273-10
	Synertek	**SY6551**	★ **1696**
			1341-125
			¶ 289-7
		SY6551A	★ **1696**
			1341-126
			¶ 289-7

Arranged alphanumerically from left to right.

Base Number	Source	Device	Page-Line
65516	**Motorola**	**MCM65516**	★4048
			1343-90
			¶ 268-16
		MCM65516-43	★4048
			3784-21
			¶ 268-16
		MCM65516-55	★4048
			3784-46
			¶ 268-16
	RCA	**CDP65516**	★1593
			3784-47
6552	National	NMC6552	588-35
	Panasonic	**AN6552**	★3556
			3208-42
6554	**Panasonic**	**AN6554**	★3556
		AN6554N	★3556
6555	**Panasonic**	**AN6555**	★3556
6556	**Panasonic**	**AN6556**	★3556
6557	**Panasonic**	**AN6557**	★3556
6558	**Panasonic**	**AN6558**	★3556
656	Telefunken	U656BS	641-37
	Unitrode	PIC656	3231-35
6561	**Harris**	**HM6561**	★3965
			588-25
		HM6561-2	★3965
			3773-31
		HM6561-5	★3965
			3773-54
		HM6561-8	★3965
			3773-32
		HM6561-9	★3965
			3773-33
		HM6561B-2	★3965
			3773-4
		HM6561B-8	★3965
			3773-5
		HM6561B-9	★3965
			3773-6
	Panasonic	**AN6561**	★3556
6562	**Panasonic**	**AN6562**	★3556
6564	**Harris**	**HM5-6564-2**	★3968
			3782-1
			3782-72
		HM5-6564-5	★3968
			3782-3
			3782-74
		HM5-6564-9	★3968
			3782-2
			3782-73
		HS6564RH	★4696
			3781-124
	Panasonic	**AN6564**	★3556
65642	Harris	HM65642	3781-109
657	Signetics	NE657	3164-67
	Unitrode	PIC657	3231-36
6570	**Panasonic**	**AN6570**	★3556
6571	**Panasonic**	**AN6571**	★3556
6572	**Panasonic**	**AN6572**	★3556
6573	**Panasonic**	**AN6573**	★3556
6587	**Harris**	**HI6587**	★2942
6591	**Synertek**	**SY6591**	★1696
			1341-135
		SY6591A	★1696
			1341-136
6592	Rockwell	R6592	1341-131
6593	**Panasonic**	**AN6593**	★3556
65C00	Synertek	SY65C00	1341-115
65C02	Rockwell	R65C02	1279-26
	Synertek	**SY65C02**	★1696
			1341-116
65C06	**Synertek**	**SY65C06**	★1696
			1341-117
65C102	Rockwell	R65C102	1279-27
65C112	Rockwell	R65C112	1279-28
65C12	**Synertek**	**SY65C12**	★1696
			1341-118
65C13	**Synertek**	**SY65C13**	★1696
			1341-119
65C14	**Synertek**	**SY65C14**	★1696
			1341-120
65C15	**Synertek**	**SY65C15**	★1696
			1341-121
65C20	**Synertek**	**SY65C20**	★1696
			1343-50
65C22	**Synertek**	**SY65C22**	★1696
			1343-51
65C32	**Synertek**	**SY65C32**	★1696
			1341-154
65C51	**Synertek**	**SY65C51**	★1696
			1341-127
65SC02	GTEMicro	G65SC02	1341-64
			1269-18
65SC03	GTEMicro	G65SC03	1341-65
			1269-19
65SC04	GTEMicro	G65SC04	1341-66
			1269-20
65SC05	GTEMicro	G65SC05	1341-67
			1269-21
65SC06	GTEMicro	G65SC06	1341-68
			1269-22
65SC07	GTEMicro	G65SC07	1341-69
			1269-23
65SC102	GTEMicro	G65SC102	1341-70
			1269-24
65SC103	GTEMicro	G65SC103	1341-71
			1269-25
65SC104	GTEMicro	G65SC104	1341-72
			1269-26
65SC105	GTEMicro	G65SC105	1341-73
			1269-27
65SC106	GTEMicro	G65SC106	1341-74
			1269-28
65SC107	GTEMicro	G65SC107	1341-75
			1269-29
65SC112	GTEMicro	G65SC112	1341-76
			1269-30
65SC115	GTEMicro	G65SC115	1341-77
			1269-31
65SC12	GTEMicro	G65SC12	1341-78
			1269-32
65SC13	GTEMicro	G65SC13	1341-79
			1269-33
65SC14	GTEMicro	G65SC14	1341-80
			1269-34
65SC15	GTEMicro	G65SC15	1341-81
			1271-1
65SC150	GTEMicro	G65SC150	1271-2
65SC21	GTEMicro	G65SC21	1341-138
65SC22	GTEMicro	G65SC22	1341-139
	Mitel	MD65SC22	1341-148
65SC28	Mitel	MD65SC28	1341-140
65SC32	GTEMicro	G65SC32	1341-151
65SC51	GTEMicro	G65SC51	1341-123
	Mitel	MD65SC51	1341-128
65SC58	Mitel	MD65SC58	1341-129
65X08	Intersil	IM65X08	3775-3
		IM65X08-1M	3774-116
		IM65X08A	3774-122
		IM65X08A-1	3774-106
		IM65X08A-1I	3774-107
		IM65X08AM	3774-123
		IM65X08C	3775-25
		IM65X08M	3775-4
65X18	Intersil	IM65X18-1	3774-120
		IM65X18-1M	3774-121
		IM65X18A	3774-124
		IM65X18A-1	3774-109
		IM65X18A-1M	3774-110
		IM65X18AM	3774-125
		IM65X18C	3775-10
		IM65X18M	3775-11
65X51	Intersil	IM65X51	3773-39
		IM65X51-1	3773-13
		IM65X51-1M	3773-14
		IM65X51A	3773-17
		IM65X51AM	3773-18
		IM65X51C	3773-57
		IM65X51M	3773-40
65X61	Intel	IM65X61-1	3773-7
	Intersil	IM65X61	3773-34
		IM65X61-1	3773-8
		IM65X61-1M	3773-9
		IM65X61A	3773-15
			(Continued)
65X61	Intersil	IM65X61AM	3773-16
		IM65X61C	3773-55
		IM65X61M	3773-35
66	MCE	MCE66	3198-1
	Rockwell	A66XX	1339-105
660	Motorola	MC660	601-75
	Motorola	**MC660Series**	★820
	Signetics	NE660	3164-66
	Telefunken	SAS660	3173-108
			¶ 304-5
	Unitrode	PIC660	3231-37
6600	Harris	HD6600-2	638-13
			2662-122
			2683-32
		HD6600-5	638-14
			2662-123
			2683-33
	MMI	**HD6600**	★819
			638-15
	National	HD6600	2662-124
			2683-34
	Telefunken	SAS6600	3173-109
66016	**Synertek**	**SY66016**	★1696
			604-133
6605	**MMI**	**HD6605**	★819
			638-16
660C16	**Synertek**	**SY660C16**	★1696
			571-165
661	Motorola	MC661	601-76
	Unitrode	PIC661	3231-38
6610	Telefunken	SAS6610	3173-110
6611	Harris	HM6611	587-172
6616	**Harris**	**HM6616-8**	★3969
			3765-43
662	Motorola	MC662	601-43
	Unitrode	PIC662	3231-39
663	Motorola	MC663	601-63
664	Motorola	MC664	601-64
	Telefunken	U664B	641-14
		U664BS	641-15
6640	Plessey	SL6640	3168-105
			¶ 301-7
6641	**Harris**	**HM6641**	★3969
			587-142
			¶ 319-15
		HM6641-2	★3969
			3762-55
			¶ 319-15
		HM6641-8	★3969
			3762-56
			¶ 319-15
		HM6641-9	★3969
			3762-57
			¶ 319-15
	Motorola	MCM6641-20	3780-40
		MCM6641-25	3780-61
		MCM6641-30	3780-93
		MCM6641-45	3780-123
66450	**Synertek**	**SY66450**	★1696
			1352-105
665	Motorola	MC665	602-33
	Telefunken	U665B	641-45
6653	Intersil	IM6653-1	3763-13
		IM6653M	3763-14
6654	Intersil	IM6654	3762-61
		IM6654-1	3762-60
		IM6654A	3762-58
		IM6654M	3762-62
66550	**Synertek**	**SY66550**	★1696
			1353-3
6657	Intersil	IM6657	3764-68
		IM6657M	3764-69
6658	Intel	IM6658	3763-119
		IM6658M	3763-120
666	Motorola	MC666	602-34
	Telefunken	U666B	641-32
		U666BS	641-33
		U666BST	641-34
6664	**Harris**	**HM6664-2**	★3969
			3766-73
		HM6664-8	★3969
			3766-74
		HM6664-9	★3969
			3766-75
	Motorola	**MCM6664A-15**	★4046
			3769-75
			(Continued)
6664	**Motorola**	**MCM6664A-15**	¶ 322-15
			¶ 322-16
		MCM6664A-20	★4046
			3769-101
			¶ 322-15
			¶ 322-16
6665	**Motorola**	**MCM6665A-12**	★4046
			3769-51
		MCM6665A-15	★4046
			3769-76
		MCM6665A-20	★4046
			3769-102
		MCM6665B	★4050
		MCM6665B-12	★4046
			3769-52
		MCM6665B-15	★4046
			3769-77
		MCM6665B-20	★4046
			3769-103
		MCM6665C-12	★4046
			3768-74
		MCM6665C-15	★4046
			3768-84
		MCM6665C-20	★4046
			3768-109
66656	**Motorola**	**MCM66656**	★4050
667	**AD**	**AD667J**	★2818
			★2827
			2648-46
		AD667K	★2818
			★2827
			2647-49
		AD667S	★2818
			★2827
			2648-47
	Motorola	MC667	602-12
6670	**Motorola**	**MCM6670**	★4048
			3755-12
66700	**Motorola**	**MCM66700**	★4048
			3783-92
66710	**Motorola**	**MCM66710**	★4048
			3783-93
66714	**Motorola**	**MCM66714**	★4048
			3783-94
66720	**Motorola**	**MCM66720**	★4048
			3783-95
66730	**Motorola**	**MCM66730**	★4048
			3783-96
66734	**Motorola**	**MCM66734**	★4048
			3783-97
6674	**Motorola**	**MCM6674**	★4048
			3755-13
66740	**Motorola**	**MCM66740**	★4048
			3783-98
66750	**Motorola**	**MCM66750**	★4048
			3783-99
66751	Motorola	MCM66751	3783-100
66760	**Motorola**	**MCM66760**	★4048
			3783-101
66770	**Motorola**	**MCM66770**	★4048
			3783-102
66780	**Motorola**	**MCM66780**	★4048
			3783-103
66790	**Motorola**	**MCM66790**	★4048
			3783-104
668	Motorola	MC668	601-96
6688	**AMD**	**AM6688**	★3309
			3236-39
		AM6688L-6	★3309
			3236-40
		AM6688L-7	★3309
			3236-41
		AM6688L-8	★3309
			3236-42
		AM6688M-6	★3309
			3236-43
		AM6688M-7	★3309
			3236-44
		AM6688M-8	★3309
			3236-45
668C40	**Synertek**	**SY668C40**	★1696
669	Motorola	MC669	602-4
66L41	Motorola	MCM66L41-20	3780-41
		MCM66L41-25	3780-62
		MCM66L41-30	3780-94
		MCM66L41-45	3780-124

¶ Indicates page number in Application Note Directory.
★ Indicates addition data is provided on the page noted.

Base Number	Source	Device	Page-Line
670	Motorola	MC670	601-87
	Telefunken	SAS670	3173-111
	Unitrode	PIC670	3231-40
6700	Telefunken	SAS6700	3173-112
671	Motorola	MC671	601-88
	Siemens	TCA671	3157-21
	Unitrode	PIC671	3231-41
6710	Telefunken	SAS6710	3173-113
6716	National	NMC6716-1	3765-58
		NMC6716-2	3765-66
672	Motorola	MC672	601-97
	Unitrode	PIC672	3231-42
673	AD	AD673J	★2838
			2627-2
		AD673S	★2838
			2627-3
	Motorola	MC673	601-115
			¶ 307-12
674	Harris	HI674AJ	2634-28
		HI674AK	2634-55
		HI674AL	2635-1
		HI674AS	2634-29
		HI674AT	2635-2
		HI674AU	2635-3
	Motorola	MC674	601-116
67401	MMI	C67401	★805
			3757-51
		C67401A	★805
			3757-54
		C67401B	★805
			3757-55
67402	MMI	C67402	★805
			3757-60
		C67402B	★805
			3757-63
6741	RCA	CA6741	3197-2
675	HybridSys	R675B-1	3237-53
		R675B-3	3237-108
		R675B-4	3237-54
		R675B-5	3237-55
		R675C-1	3237-56
		R675C-3	3237-109
		R675C-5	3237-57
	Motorola	MC675	602-41
67558	MMI	67558	604-168
		67558-1	604-169
676	Motorola	MC676	601-34
			2663-129
677	Motorola	MC677	601-8
678	Motorola	MC678	601-4
			601-17
6780	Panasonic	AN6780	3220-5
68	ApplSys	ACS/68	1959-11
	Fairchild	F68-PEP	1961-15
	Fairchild	PEP-68	★1912
			1811-14
	Force	SYS68K/CPU-1	
			1965-42
	Heurikon	HK-68A	1967-7
		HK68	1811-15
		MK68	1967-1
	Motorola	M68BSAC	★1920
		M68BSACE	★1920
		M68EDITM	★1924
		M68KDFORTRAN	
			★1917
		M68KDPASCALN	
			★1917
		M68KOVDOS	★2041
		M68MDOC	★1924
		M68MMPS-1	★2046
		M68XDOC	★1924
	Motorola	MEX68KDM	1967-3
	Motorola	MEX68KECB	★1921
		MEX68RR	★2046
		VMC68/2	★1916
	National	VMC68K/15	1965-40
	Omnibyte	OB68K/MMU	1967-28
		OB68K/SYS	1815-11
	RCIData	CMC68/04A	1959-31
		CMC68/15	1959-15
		CMC68/15B	1959-24
		CMC68/15C	1959-16
		CMC68/15G	1959-17
	Sunrise	ZAP68	★4403
			(Continued)

Base Number	Source	Device	Page-Line
68	Wintek	MCH68	★2062
	Wintek	Sprint68	1817-21
680	AWI	SSC680	1352-28
	Motorola	MC680	601-12
	RTC	MS680	3167-31
6800	AMI	S6800	1342-88
			1267-4
	Digitek	DK-6800	1959-10
	Fairchild	F6800	★1454
			★1458
			★1461
			1342-91
			★1454
			★1458
			★1461
			1267-23
	Hitachi	HD6800	1342-94
			1271-7
	Motorola	M6800EXOR	★1923
			¶ 261-16
		M6800UPBWNLD	
			★1924
			¶ 261-16
		MC6800	★1505
			★2045
			1342-97
			¶ 261-4
			¶ 266-17
			¶ 269-13
			¶ 272-3
			¶ 272-10
			¶ 276-7
			★1505
			★2045
			1273-33
			¶ 261-4
			¶ 266-17
			¶ 269-13
			¶ 272-3
			¶ 272-10
			¶ 276-7
	Thomson-CSF		
		EF6800	1342-100
			¶ 266-6
68000	Hitachi	HD68000	1351-88
		HD68000-10	1351-89
		HD68000-4	1351-90
		HD68000-6	1351-91
		HD68000-8	1351-92
		HD68000R-10	1285-12
		HD68000R-4	1285-13
		HD68000R-6	1285-14
		HD68000R-8	1285-15
	Mostek	MK68000	1287-33
		MK68000-10	1351-93
		MK68000-4	1351-94
		MK68000-6	1351-95
		MK68000-8	1351-96
		MKB68000	1287-36
	Motorola	M68000(EX0macs)	
			★1915
			1815-7
		MC68000-10	★1506
			★1506
			★1508
			★2040
			1351-97
			¶ 261-16
			¶ 263-12
			¶ 266-4
			¶ 266-5
			¶ 266-8
			¶ 266-9
			¶ 267-1
			¶ 267-5
			¶ 267-10
			¶ 267-13
			¶ 267-15
			¶ 276-5
			¶ 277-5
			¶ 322-16
		MC68000-12	★1506
			★1506
			★1508
			★2040
			1351-98
			(Continued)

Base Number	Source	Device	Page-Line
68000	Motorola	MC68000-12	¶ 261-16
			¶ 263-12
			¶ 266-4
			¶ 266-5
			¶ 266-8
			¶ 266-9
			¶ 267-1
			¶ 267-5
			¶ 267-10
			¶ 267-13
			¶ 267-15
			¶ 276-5
			¶ 277-5
			¶ 322-16
		MC68000-4	★1506
			★1506
			★1508
			★2040
			1351-99
			¶ 261-16
			¶ 263-12
			¶ 266-4
			¶ 266-5
			¶ 266-8
			¶ 266-9
			¶ 267-1
			¶ 267-5
			¶ 267-10
			¶ 267-13
			¶ 267-15
			¶ 276-5
			¶ 277-5
			¶ 322-16
		MC68000-6	★1506
			★1506
			★1508
			★2040
			1351-100
			¶ 261-16
			¶ 263-12
			¶ 266-4
			¶ 266-5
			¶ 266-8
			¶ 266-9
			¶ 267-1
			¶ 267-5
			¶ 267-10
			¶ 267-13
			¶ 267-15
			¶ 276-5
			¶ 277-5
			¶ 322-16
		MC68000-8	★1506
			★1506
			★1508
			★2040
			1351-101
			¶ 261-16
			¶ 263-12
			¶ 266-4
			¶ 266-5
			¶ 266-8
			¶ 266-9
			¶ 267-1
			¶ 267-5
			¶ 267-10
			¶ 267-13
			¶ 267-15
			¶ 276-5
			¶ 277-5
			¶ 322-16
	Rockwell	R68000	1351-102
	Signetics	SCN68000	★1689
			★1690
			1351-103
			★1689
			★1690
			1287-11
	Thomson-CSF		
		EF68000	1351-104
68000C4			
	Thomson-CSF		
		MC68000C4	1351-105
68000C6			
	Thomson-CSF		
		MC68000C6	1351-106

Base Number	Source	Device	Page-Line
68000L10			
	Motorola	MC68000L10	★1507
			1287-37
68000L12			
	Motorola	MC68000L12	★1507
			1287-38
68000L4			
	Motorola	MC68000L4	1289-1
68000L6			
	Motorola	MC68000L6	★1507
			1289-2
68000L8			
	Motorola	MC68000L8	★1507
			1289-3
68008	Mostek	MK68008	1287-34
	Motorola	MC68008	★1506
			★1508
			1351-84
			★1506
			★1508
			1275-1
	Signetics	SCN68008	★1690
			1351-85
6801	AMI	S6801	★1450
			1342-28
	AMI	S6801	1267-5
	Fairchild	F6801	1342-30
			1267-24
		F6801E	1342-17
	HiLevel	6801VICE	1811-17
	Hitachi	HD6801	1342-31
			1271-8
	Motorola	MC6801	★1501
			★1505
			1342-33
			¶ 260-6
			¶ 263-1
			¶ 266-3
			★1501
			★1505
			1275-2
			¶ 260-6
			¶ 263-1
			¶ 266-3
		MC6801-1	★1501
			★1505
			1342-34
			¶ 260-6
			¶ 263-1
			¶ 266-3
			★1501
			★1505
			1275-3
			¶ 260-6
			¶ 263-1
			¶ 266-3
		MC6801C	★1501
			★1505
			1342-35
			¶ 260-6
			¶ 263-1
			¶ 266-3
		MEX6801	★1923
		MEX6801EVM	★1921
	Thomson-CSF		
		EF6801	1342-44
68010	Mostek	MK68010	1287-35
	Motorola	MC68010	★1506
			★1508
			1351-86
			★1506
			★1508
			1289-4
	Signetics	SCN68010	★1690
			1351-87
6801EVM1			
	Motorola	MEX6801EVM1	★1921
6801U4	Motorola	MC6801U4	★1501
			1342-36
	Motorola	MC6801U4	1275-4
	Motorola	MC6801U4-1	★1501
			1275-5
6802	AMI	S6802	1342-56
			¶ 265-4
			¶ 271-10
			1267-6
			(Continued)

Arranged alphanumerically from left to right.

© IC MASTER 1984

Base Number	Source	Device	Page-Line
6802	AMI	S6802	¶ 265-4
			¶ 271-10
	Fairchild	**F6802**	★ **1461**
			1342-59
	Fairchild	F6802	1267-25
	Hitachi	HD6802	1342-63
			1271-9
	Motorola	**MC6802**	★ **1505**
			★ **2045**
			1342-64
			¶ 269-14
			★ **1505**
			★ **2045**
			1275-6
	Thomson-CSF		
		EF6802	1342-67
68020	**Motorola**	**MC68020**	★ **1506**
			★ **1508**
			1352-73
			★ **1506**
			★ **1508**
			1289-10
	Signetics	**SCN68020**	★ **1690**
			1352-74
6803	AMI	S6803	1342-19
			1267-7
		S6803N/R	1342-20
	Fairchild	F6803	1342-21
			1267-26
	Hitachi	HD6803	1342-18
			1271-10
	Motorola	**MC6803**	★ **1501**
			1342-22
			¶ 266-3
	Motorola	MC6803	1275-7
	Motorola	**MC6803-1**	★ **1501**
			1342-23
			¶ 266-3
		MC6803C	★ **1501**
			1342-24
			¶ 266-3
		MC6803E	★ **1501**
			1275-8
			¶ 266-3
6803U4	**Motorola**	**MC6803U4**	★ **1501**
			1342-37
	Motorola	MC6803U4	1275-9
	Motorola	**MC6803U4-1**	★ **1501**
			1275-10
68045	**AMI**	**S68045**	★ **1452**
			1342-141
			¶ 265-5
	Synertek	**SY68045**	★ **1696**
			1342-155
6804J2	**Motorola**	**MC6804J2**	★ **1504**
			1275-11
6804P2	**Motorola**	**MC6804P2**	★ **1504**
			1275-12
6805	**AMI**	**S6805**	★ **1451**
			1342-29
	AMI	S6805	1267-8
	Hitachi	HD6805	1342-32
			1271-11
	Onset	CPU-6805A	1961-2
6805E2	**RCA**	**CDP6805E2**	★ **1592**
			1342-8
	RCA	CDP6805E2	1279-13
6805F2	**RCA**	**CDP6805F2**	★ **1592**
			1342-6
	RCA	CDP6805F2	1279-14
6805G2	**RCA**	**CDP6805G2**	★ **1592**
			1342-7
	RCA	CDP6805G2	1279-15
6805K3	**Motorola**	**MC6805K3**	★ **1502**
			★ **1505**
6805P2	**Motorola**	**MC6805P2**	★ **1502**
			★ **1505**
			1342-38
			★ **1502**
			★ **1505**
			1275-13
	Thomson-CSF		
		EF6805P2	1342-45
6805P3	**Motorola**	**MC6805P3**	★ **1502**
6805P4	**Motorola**	**MC6805P4**	★ **1502**
			★ **1505**
			(Continued)

Base Number	Source	Device	Page-Line
6805P4	**Motorola**	**MC6805P4**	**1342-39**
			★ **1502**
			★ **1505**
			1275-14
6805P6	**Motorola**	**MC6805P6**	★ **1505**
			1342-40
	Motorola	MC6805P6	1275-15
6805R2	**Motorola**	**MC6805R2**	★ **1502**
			★ **1505**
			1342-27
			★ **1502**
			★ **1505**
			1275-16
	Thomson-CSF		
		EF6805R2	1342-101
6805R3	**Motorola**	**MC6805R3**	★ **1502**
			1275-17
6805S2	**Motorola**	**MC6805S2**	★ **1505**
			1275-18
6805T2	**Motorola**	**MC6805T2**	★ **1505**
			1342-1
	Motorola	MC6805T2	1275-19
6805U2	**Motorola**	**MC6805U2**	★ **1505**
			1342-41
	Motorola	MC6805U2	1275-20
6805U3	**Motorola**	**MC6805U3**	★ **1505**
			1275-21
6808	**Fairchild**	**F6808**	★ **1461**
			1342-81
	Fairchild	F6808	1267-27
	Hitachi	HD6808	1342-82
	Motorola	**M6808SA**	★ **1923**
		MC6808	★ **1505**
			1342-84
	Motorola	MC6808	1275-22
	Motorola	**MEX6808-22**	★ **2046**
	Thomson-CSF		
		EF6808	1342-87
6809	**AMI**	**S6809**	★ **1448**
			1342-68
	AMI	S6809	1267-9
	AMI	**S6809(E)**	★ **1448**
			1342-47
	Digitek	DK6809	1961-7
	Fairchild	**F6809**	★ **1459**
			1342-71
	Fairchild	F6809	1267-28
	Fairchild	**F6809E**	★ **1459**
			1342-50
	Fairchild	F6809E	1267-29
	Hitachi	HD6809	1342-74
			1271-12
		HD6809E	1271-13
	Motorola	**M6809BASMR**	★ **1924**
		M6809EXOR	★ **1923**
		M6809FORTRN	★ **1924**
		M6809MPL	★ **1924**
		M6809PASCLC	★ **1924**
		MC6809	★ **1505**
			★ **2045**
			1342-77
			¶ 260-10
			¶ 265-10
			¶ 265-12
			¶ 266-2
			¶ 266-12
			¶ 266-17
			¶ 274-8
			★ **1505**
			★ **2045**
			1275-23
			¶ 260-10
			¶ 265-10
			¶ 265-12
			¶ 266-2
			¶ 266-12
			¶ 266-17
			¶ 274-8
		MC6809E	★ **1505**
			★ **2045**
			1342-53
			¶ 260-10
			¶ 262-7
			¶ 265-10
			¶ 265-10
			¶ 265-12
			(Continued)

Base Number	Source	Device	Page-Line
6809	**Motorola**	**MC6809E**	¶ 265-12
			¶ 266-2
			¶ 266-12
			¶ 266-17
			¶ 274-8
			¶ 274-14
			★ **1505**
			★ **2045**
			1275-24
			¶ 260-10
			¶ 262-7
			¶ 265-10
			¶ 265-10
			¶ 265-12
			¶ 265-12
			¶ 266-2
			¶ 266-12
			¶ 266-17
			¶ 274-8
			¶ 274-14
		MP6809UPDWNLD	
			★ **1924**
	Thomson-CSF		
		EF6809	1342-80
681	Motorola	MC681	601-5
	RTC	MS681	3167-32
6810	AMI	S6810	3771-125
		S6810-1	3771-118
	Fairchild	**F6810**	★ **1461**
			3771-126
	Motorola	**MCM6810**	★ **1505**
			★ **4046**
			3772-1
	Siemens	SAS6810	3173-107
	Thomson-CSF		
		EF6810	3772-2
6811	Panasonic	AN6811	640-82
68116	AMI	S68116	3783-108
68120	**Motorola**	**MC68120**	★ **1501**
			★ **1505**
			★ **1509**
			★ **1506**
			1352-5
			¶ 262-7
			¶ 274-14
			★ **1501**
			★ **1505**
			★ **1509**
			★ **1506**
			1275-25
			¶ 262-7
			¶ 274-14
		MEX68120EVM	★ **1921**
	Signetics	SCN68120C	1352-7
68121	**Motorola**	**MC68121**	★ **1501**
			★ **1509**
			1352-6
			¶ 261-12
			★ **1501**
			★ **1509**
			1275-26
68122	Motorola	MC68122	1342-139
			1351-109
		MC68122-1	1342-140
			1351-110
68132	AMI	S68132	3784-57
68153	Motorola	MC68153	1351-108
			1355-6
6816	**Motorola**	**MEX6816-1HR**	★ **2046**
		MEX6816-22D	★ **2046**
		MEX6816-22S	★ **2046**
68164	AMI	S68164	3785-49
6818	**RCA**	**CDP6818**	★ **1595**
			1342-135
682	Motorola	MC682	602-9
	RTC	MS682	3167-33
6820	Fairchild	F6820	1343-37
			1355-24
	Motorola	**MEX6820**	★ **2046**
	Panasonic	AN6820	640-120
	Signetics	**SCN6820**	★ **1690**
	Synertek	SY6820	1343-52
68200	Mostek	MK68200	1287-1
6821	AMI	S6821	1343-34
			1355-21
	Fairchild	**F6821**	★ **1462**
			(Continued)

Base Number	Source	Device	Page-Line
6821	**Fairchild**	**F6821**	**1343-38**
			1355-25
	Hitachi	HD6821	1343-41
	Motorola	**MC6821**	★ **1505**
			1343-46
			1355-28
			¶ 266-8
			¶ 274-4
		MEX6821-2	★ **2046**
	Panasonic	AN6821	640-121
	Synertek	**SY6821**	★ **1696**
			1343-53
	Thomson-CSF		
		EF6821	1343-56
			1355-34
6822	**Motorola**	**MC6822**	★ **1505**
			1343-23
6823	**RCA**	**CDP6823**	★ **1595**
			1343-33
68230	**Signetics**	**SCN68230C**	★ **1691**
			1352-21
68230L10			
	Motorola	**MC68230L10**	★ **1506**
			★ **1509**
			1352-19
68230L8			
	Motorola	**MC68230L8**	★ **1506**
			★ **1509**
			1352-20
68230P10			
	Mostek	MK68230P10	1352-17
68230P8			
	Mostek	MK68230P8	1352-18
6828	**Motorola**	**MC6828**	★ **1505**
			1343-60
			1355-41
6829	**Motorola**	**MC6829**	★ **1505**
			1343-27
			¶ 274-8
683	Motorola	MC683	602-1
	RTC	MS683	3167-34
68316	**Fairchild**	**F68316**	★ **1464**
			3784-10
	Motorola	MCM68316	3756-8
6832	**Datel**	**ST-6832**	★ **2039**
	Motorola	**MEX6832-1HR**	★ **2046**
		MEX6832-22	★ **2046**
68332	AMI	S68332	3785-4
	Fairchild	**F68332**	★ **1465**
			3785-35
6835	**Motorola**	**MC6835**	★ **1505**
			1342-148
	Panasonic	**DN6835**	★ **3558**
			641-62
	Panasonic	DN6835	3234-14
6836	**Panasonic**	**DN6836**	★ **3558**
68364	**Motorola**	**MCM68364**	★ **4048**
			★ **4054**
			3785-55
		MCM68364-25	★ **4048**
			★ **4054**
			3785-87
		MCM68364-30	★ **4048**
			★ **4054**
			3786-9
68365	**Motorola**	**MCM68365-25**	★ **4048**
			★ **4054**
			3785-88
		MCM68365-35	★ **4048**
			★ **4054**
			3786-44
68366	**Motorola**	**MCM68366-25**	★ **4048**
			★ **4054**
			3785-89
		MCM68366-35	★ **4048**
			★ **4054**
			3786-45
68367	**Motorola**	**MCM68367-45**	★ **4054**
			3786-76
68368	**Motorola**	**MCM68368-45**	★ **4054**
			3786-77
68369	**Motorola**	**MCM68369-25**	★ **4055**
			3785-103
		MCM68369-35	★ **4055**
			3786-51

¶ Indicates page number in Application Note Directory.
★ Indicates addition data is provided on the page noted.

SECTION	PRODUCTS IN SECTION
Digital	Arithmetic functions, buffers/inverters, counters, decoders, drivers, flip-flops, gates, latches, memories, multiplexers, multivibrators, oscillators/dividers, shift registers, translators.
Military	Military-commercial/commercial-military cross-references; QPL-38510/xx list; military ICs.
Microprocessor	Microprocessors, microcomputers, and microprocessor system components.
Microprocessor Development Systems	Systems covered range from simple, single-user, text-editing stations to multi-user computers, dedicated to software development.
Microcomputer Boards	Microcomputer boards, hardware and software support.
Microcomputer Support Boards	Boards with functions and peripheral controllers
Interface	Analog switches, analog-to-digital converters, digital-to-analog converters, display converters, display drivers, error checking circuits, keyboard encoders-decoders, drivers, sense amplifiers, and transmitters/receivers.
Linear	Special-purpose amplifiers, arrays, comparators, consumer circuits, followers, operational amplifiers, phase locked loop circuits, telecommunication circuits, timers, voltage regulators, and special functions.
Memory	Character generators, code converters, FIFOs, LIFOS, E²PROMs, PROMs, RAMs, ROMs, and shift registers.
PROM Programmers	Programmers for system development, production, and field service.
Custom/ Semicustom	Custom/ semicustom gate arrays, standard cells, PLAs

SIX KEY PHASES OF NEW SYSTEM DEVELOPMENT

Planning

A good design

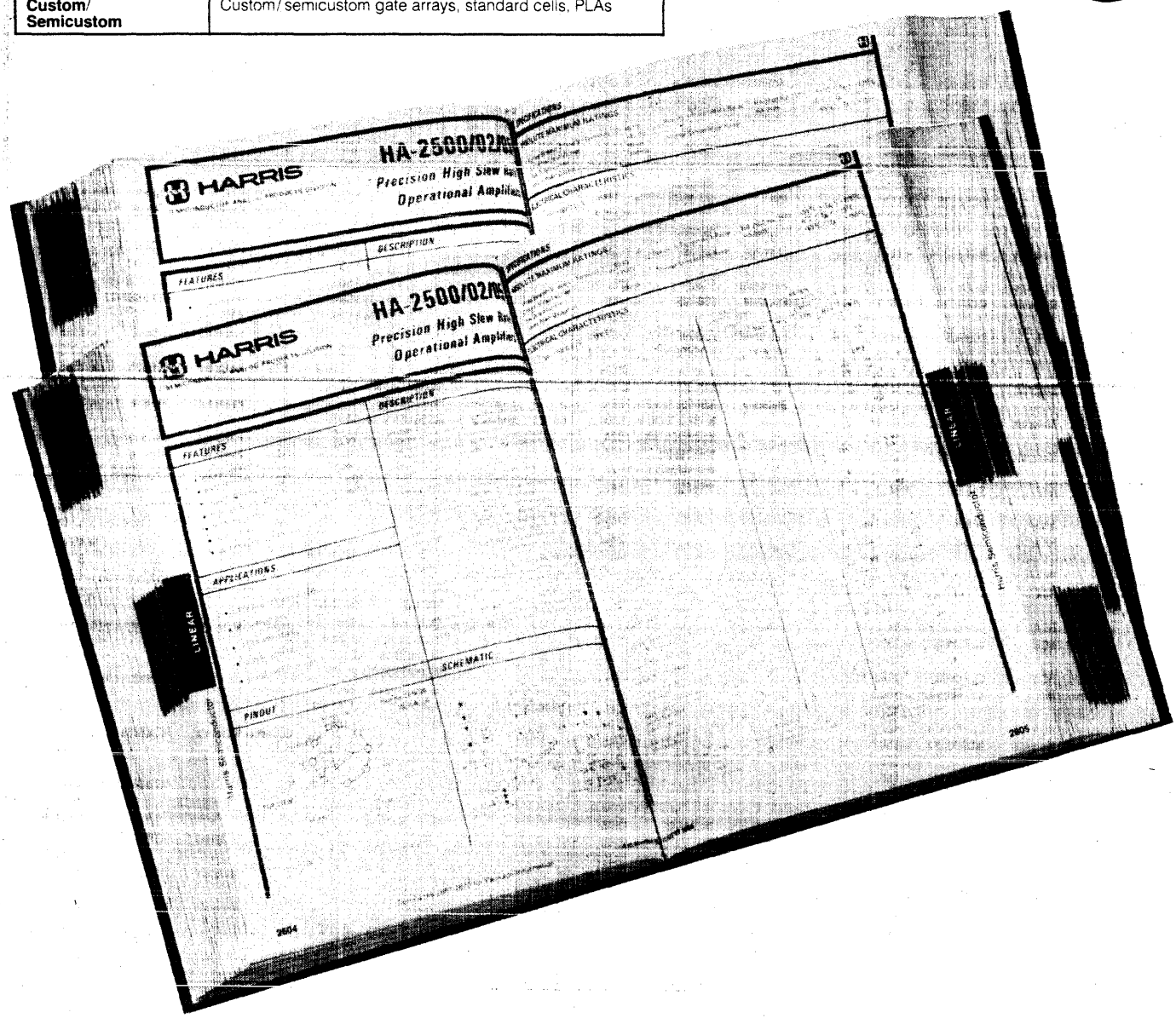

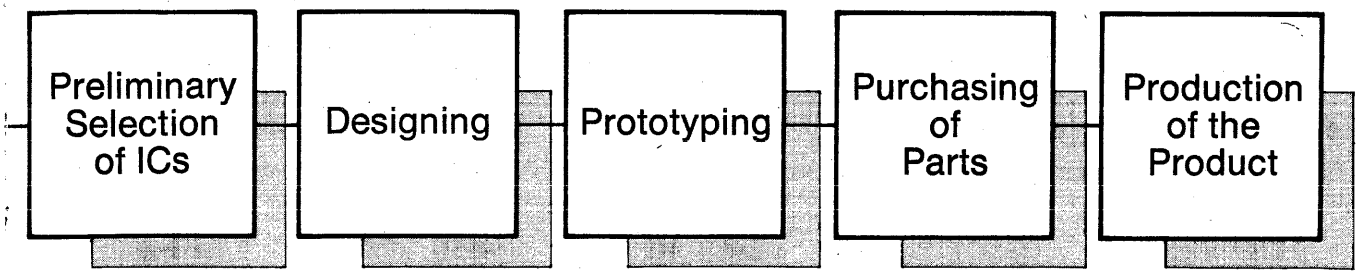

is "mastered" early.

When is the best time for an engineer to pick the integrated circuits that will go into his next design?

The best time is at an early stage in the design process when the engineer's plans are still flexible enough to take full advantage of the features selected.

There is a point in the early phases of every design when engineers focus on selecting integrated circuits. Specifications are examined, relative strengths and weaknesses of various devices are weighed, and the field of candidates is chosen. This is the critical time in the design cycle when designers want to be sure the right devices are in serious contention for their applications.

It is at this moment that the engineer reaches into his technical reference library. Of the material on his shelves, **IC MASTER** is the only reference source that has been especially prepared for this moment.

The engineer can look up each precise function that he needs and see all of the devices and their manufacturers that might satisfy his requirements. He sees this information for all manufacturers, not just for advertisers. But if an IC maker has chosen to include technical data for his products in **IC MASTER,** the engineer sees each index listing for that manufacturer in **bold face type** accompanied by the **page number** on which the data appears; the engineer can then turn immediately to the advertiser's technical data and see if the device fits his needs.

Next time, begin with the MASTER.

IC MASTER

Base Number	Source	Device	Page-Line
6837	**Panasonic**	**DN6837**	★ **3558**
			641-63
	Panasonic	DN6837	3234-15
68370	**Motorola**	**MCM68370-25**	★ **4055**
			3785-104
		MCM68370-35	★ **4055**
			3786-52
6838	**Panasonic**	**DN6838**	★ **3558**
			641-64
68380	Motorola	MCM68380	3786-108
6839	**Motorola**	**MC6839**	★ **1505**
			1343-6
	Panasonic	**DN6839**	★ **3558**
			641-65
684	Motorola	MC684	601-28
6840	AMI	S6840	1343-63
	Fairchild	**F6840**	★ **1462**
			1343-66
	Hitachi	HD6840	1343-69
	Motorola	**MC6840**	★ **1505**
			1343-72
		MC6840M	★ **1505**
			1343-73
	Thomson-CSF		
		EF6840	1343-77
6842	Motorola	MPQ6842	1342-131
6843	Hitachi	HD6843	1343-9
	Motorola	**MC6843**	★ **1505**
			1343-11
68430	**Signetics**	**SCB68430**	★ **1692**
			1351-123
6844	**Fairchild**	**F6844**	★ **1462**
			1342-162
	Hitachi	HD6844	1342-163
	Motorola	**MC6844**	★ **1505**
			1342-166
			¶ 261-12
			¶ 266-2
			¶ 266-12
			¶ 267-5
		MC6844M	★ **1505**
			1342-167
			¶ 261-12
			¶ 266-2
			¶ 266-12
			¶ 267-5
68440	**Motorola**	**MC68440**	★ **1506**
			★ **1510**
			1351-124
			1354-86
	Signetics	**SCN68440**	★ **1691**
			1351-125
6845	**Fairchild**	**F6845**	★ **1450**
			1342-144
	Hitachi	HD6845	1342-145
	Motorola	**MC6845**	★ **1505**
			1342-149
			¶ 263-12
			¶ 277-5
		MC6845M	★ **1505**
			1342-150
			¶ 263-12
			¶ 277-5
	Synertek	**SY6845E**	★ **1696**
			1352-101
		SY6845R	★ **1696**
			1342-156
			1352-99
68450	Hitachi	HD68450	1351-121
	Motorola	**MC68450**	★ **1506**
			★ **1510**
			1351-122
68451	**Motorola**	**MC68451**	★ **1506**
			★ **1510**
			1352-9
	Signetics	**SCN68451**	★ **1691**
			1352-10
68452	**Motorola**	**MC68452**	★ **1506**
			★ **1511**
			1351-107
			1352-87
68454	**Motorola**	**MC68454**	★ **1506**
			1351-118
	Signetics	**SCN68454**	★ **1691**
			1351-119
68459	**Signetics**	**SCB68459**	★ **1693**
			1351-120
6846	AMI	S6846	1343-82
			¶ 271-10
	Fairchild	**F6846**	★ **1463**
			1343-83
	Motorola	**MC6846**	★ **1505**
			1343-84
			¶ 267-1
			¶ 269-14
		MC6846M	★ **1505**
			1343-85
			¶ 267-1
			¶ 269-14
6847	Fairchild	F6847	1353-15
	Motorola	**MC6847**	★ **1505**
			3173-20
			¶ 260-6
			¶ 260-10
			¶ 267-16
	Motorola	MC6847	1343-116
			1352-26
			1353-17
			¶ 260-6
			¶ 260-10
			¶ 267-16
	Motorola	**MC6847Y**	★ **1505**
			1352-27
			¶ 260-6
			¶ 260-10
			¶ 267-16
68478	Motorola	MC68478	1343-117
6848	**Motorola**	**MEX6848-1HR**	★ **2046**
		MEX6848-22	★ **2046**
	RCA	**CDP6848**	★ **1595**
			1343-62
		CDP6848C	★ **1595**
			1343-115
68488	**Fairchild**	**F68488**	★ **1463**
			1343-14
	Motorola	**MC68488**	★ **1505**
			1343-15
			¶ 266-2
		MC68488M	★ **1505**
			1343-16
			¶ 266-2
685	AMD	AM685L	3159-17
		AM685M	3159-18
	Motorola	MC685	601-19
6850	AMI	S6850	2685-3
			1342-113
			1354-116
	Fairchild	**F6850**	★ **1463**
			2685-4
	Fairchild	F6850	1342-116
			1354-119
	Hitachi	HD6850	1342-119
	Motorola	**MC6850**	★ **1505**
			2685-5
			¶ 266-4
			¶ 286-2
	Motorola	MC6850	1342-121
			1354-121
			¶ 266-4
			¶ 286-2
	Motorola	**MC6850M**	★ **1505**
			1342-122
			¶ 266-4
			¶ 286-2
		MEX6850	★ **2046**
		MEX6850-2	★ **2046**
	Thomson-CSF		
		EF6850	2685-6
			1342-127
			1355-3
6851	**RCA**	**CDP6851**	★ **1595**
6852	AMI	S6852	1343-100
	Fairchild	**F6852**	★ **1464**
			1343-103
			1355-49
	Hitachi	HD6852	1343-106
	Motorola	**MC6852**	★ **1505**
			2686-37
			¶ 267-13
	Motorola	MC6852	1343-108
			1355-50
			(Continued)
6852	**Motorola**	**MC6852M**	★ **1505**
			1343-109
			¶ 267-13
	Thomson-CSF		
		EF6852	1343-112
			1355-51
6853	**RCA**	**CDP6853**	★ **1595**
			1340-105
6854	AMI	S6854	1342-102
	Fairchild	**F6854**	★ **1464**
			1342-106
	Motorola	**MC6854**	★ **1505**
			1342-110
6855	Motorola	MC6855	1343-3
6856	**Fairchild**	**F6856**	★ **1460**
			2686-35
	Fairchild	F6856	1342-107
68561	Motorola	MC68561	1354-21
68562	**Motorola**	**MC68562**	★ **1506**
			★ **1511**
			1351-116
	Signetics	**SCN68562**	★ **1693**
			1351-117
68564	Mostek	MK68564	1352-24
	Motorola	**MC68564**	★ **1506**
			★ **1511**
			1352-25
6859	**Motorola**	**MC6859**	★ **1505**
			640-65
	Motorola	MC6859	1342-159
68590	Mostek	MK68590	1352-8
			1354-9
686	AMD	AM686C	637-85
			3159-34
		AM686M	637-86
			3159-19
	Motorola	MC686	602-17
			3789-67
6860	**Motorola**	**MC6860**	★ **1505**
			★ **3536**
			2685-68
			¶ 286-10
			¶ 286-11
			★ **1505**
			★ **3536**
			3218-20
			¶ 286-10
			¶ 286-11
			★ **1505**
			★ **3536**
			1343-29
			¶ 286-10
			¶ 286-11
		MC6860L	★ **1505**
			★ **3536**
			1343-30
			¶ 286-10
			¶ 286-11
68601	Motorola	MC68601	1352-29
6862	**Motorola**	**MC6862**	★ **1505**
			3218-19
	Motorola	MC6862	1342-160
6864	**Motorola**	**MEX6864-1HR**	★ **2046**
		MEX6864-22	★ **2046**
68652	**Motorola**	**MC68652**	★ **1506**
			★ **1511**
			2686-11
			¶ 271-7
			¶ 276-5
			★ **1506**
			★ **1511**
			1351-112
			¶ 271-7
			¶ 276-5
		MC68652-2	★ **1506**
			★ **1511**
			2686-12
			¶ 271-7
			¶ 276-5
	Signetics	**SCN68652**	★ **1670**
			2686-15
68653	**Motorola**	**MC68653**	★ **1506**
			★ **1512**
			2666-10
			¶ 276-5
			★ **1506**
			(Continued)
68653	**Motorola**	**MC68653**	★ **1512**
			1352-23
	Signetics	**SCN68653**	★ **1671**
			2666-12
68661	**Motorola**	**MC68661**	★ **1506**
			★ **1512**
			1351-114
			¶ 271-7
			¶ 276-5
		MC68661A	★ **1506**
			★ **1512**
			2685-77
			¶ 271-7
			¶ 276-5
			★ **1506**
			★ **1512**
			1353-54
			¶ 271-7
			¶ 276-5
		MC68661B	★ **1506**
			★ **1512**
			2685-79
			¶ 271-7
			¶ 276-5
			★ **1506**
			★ **1512**
			1353-55
			¶ 271-7
			¶ 276-5
		MC68661C	★ **1506**
			★ **1512**
			2685-78
			¶ 271-7
			¶ 276-5
			★ **1506**
			★ **1512**
			1353-56
			¶ 271-7
			¶ 276-5
	Signetics	**SCN68661**	★ **1673**
			2685-80
68681	**Motorola**	**MC68681**	★ **1506**
			★ **1512**
			2686-93
			★ **1506**
			★ **1512**
			1351-115
	Signetics	**SCN68681**	★ **1694**
			2685-73
		SCN68681C	★ **1694**
			1352-30
687	AMD	AM687AL	3160-59
		AM687AM	3160-46
		AM687L	3160-60
		AM687M	3160-47
6870	Motorola	MC6870	1342-137
68701	**Motorola**	**MC68701**	★ **1501**
			1342-10
			¶ 266-3
			¶ 269-12
		MC68701-1	★ **1501**
			1342-11
			¶ 266-3
			¶ 269-12
	Motorola	MC68701-1	1275-27
			¶ 266-3
			¶ 269-12
	Motorola	**MC68701C**	★ **1501**
			1342-12
			¶ 266-3
			¶ 269-12
		MC68701C-1	★ **1501**
			1342-13
			¶ 266-3
			¶ 269-12
68701U4			
	Motorola	**MC68701U4**	★ **1501**
			1275-28
68701U5			
	Motorola	**MC68701U5**	★ **1501**
			1275-29
68704P2			
	Motorola	**MC68704P2**	★ **1504**
			1275-30
68705	**Motorola**	**M68705EVM**	★ **1921**
	Motorola	MC68705RS	1275-34

Arranged alphanumerically from left to right.

© IC MASTER 1984

Base Number	Source	Device	Page-Line
68705P3			
	Motorola	**MC68705P3**	★ **1502**
			1342-14
			¶ 269-15
	Motorola	MC68705P3	1275-31
68705P5			
	Motorola	MC68705P5	1275-32
68705R3			
	Motorola	MC68705R3	1342-9
			1342-15
			1275-33
68705R5			
	Motorola	**MC68705R5**	★ **1502**
68705U3			
	Motorola	**MC68705U3**	★ **1502**
			1342-16
			¶ 269-15
	Motorola	MC68705U3	1275-35
68705U5			
	Motorola	**MC68705U5**	★ **1502**
			1275-36
68708	Fairchild	F68708	3763-125
	Motorola	MCM68708	3764-1
6871	Motorola	MC6871	1342-138
68716	Fairchild	F68716	3765-73
6875	Motorola	MC6875	1342-132
			¶ 272-3
			¶ 274-3
		MC6875A	1342-133
			¶ 272-3
			¶ 274-3
	Panasonic	AN6875	2661-4
68764	**Motorola**	**MCM68764**	★ **4047**
			3766-107
68766	**Motorola**	**MCM68766**	★ **4047**
			3766-108
		MCM68766-35	★ **4047**
			3766-104
688	Motorola	MC688	601-58
			¶ 307-12
6880	Motorola	MC6880	2676-3
		MC6880A	1342-129
	Panasonic	AN6880	3238-91
6881	Motorola	MC6881	638-1
			1343-118
6882	**Fairchild**	**F6882**	★ **1461**
			1342-60
	Motorola	**MC6882A**	★ **3063**
			1343-126
		MC6882B	★ **3063**
			1343-127
6883	Motorola	MC6883	627-103
			1343-97
6885	Motorola	MC6885	1343-120
6886	Motorola	MC6886	1343-121
6887	Motorola	MC6887	1343-122
6888	Motorola	MC6888	1343-123
68881	**Motorola**	**MC68881**	★ **1506**
			★ **1509**
			1352-4
6889	Motorola	MC6889	638-102
			2676-15
			1342-130
689	Motorola	MC689	601-6
6890	**Motorola**	**MC6890**	★ **3068**
			2641-1
			¶ 267-7
	Motorola	MC6890	1342-157
	Motorola	**MC6890A**	★ **3068**
			2640-27
			¶ 267-7
	Motorola	MC6890A	1342-158
68901	Mostek	MK68901	1352-11
	Motorola	**MC68901**	★ **1506**
			★ **1512**
			1352-12
68A00	AMI	S68A00	1342-89
	Fairchild	F68A00	1342-92
	Hitachi	HD68A00	1342-95
	Motorola	MC68A00	1342-98
68A01	**Motorola**	**MC68A01**	★ **1501**
			1342-42
	Motorola	MC68A01	1275-37
68A02	AMI	S68A02	1342-57
			1267-10
			(Continued)

Base Number	Source	Device	Page-Line
68A02	Fairchild	F68A02	1342-61
	Motorola	MC68A02	1342-65
68A03	**Motorola**	**MC68A03**	★ **1501**
			1342-25
	Motorola	MC68A03	1275-38
68A045	**AMI**	**S68A045**	★ **1452**
			1342-142
68A08	Motorola	MC68A08	1342-85
68A09	**AMI**	**S68A09**	★ **1448**
			1342-69
	AMI	S68A09	1267-11
	AMI	**S68A09(E)**	★ **1448**
			1342-48
	Fairchild	**F68A09**	★ **1459**
			1342-72
	Fairchild	F68A09	1267-30
	Fairchild	**F68A09E**	★ **1459**
			1342-51
	Fairchild	F68A09E	1267-31
	Hitachi	HD68A09	1342-75
	Motorola	MC68A09	1342-78
		MC68A09E	1342-54
68A10	AMI	S68A10	3771-119
	Fairchild	F68A10	3771-120
	Motorola	**MCM68A10**	★ **4046**
			3771-122
	Thomson-CSF		
		EF68A10	3771-123
68A21	AMI	S68A21	1343-35
			1355-22
	Fairchild	F68A21	1343-39
			1355-26
	Hitachi	HD68A21	1343-42
	Motorola	MC68A21	1343-47
			1355-29
	Thomson-CSF		
		EF68A21	1343-57
			1355-35
68A29	Motorola	C68A29	1343-26
68A30	Motorola	MCM68A30A	3783-56
68A308	Motorola	MCM68A308	3783-60
68A308P7			
	Motorola	MCM68A308P7	
			3783-61
68A316	AMI	S68A316	3784-27
	Motorola	**MCM68A316A**	★ **4048**
			3784-13
		MCM68A316E	★ **4048**
			3784-14
		MCM68A316E-91	
			★ **4048**
			3756-9
68A316EP91			
	Motorola	MCM68A316EP91	
			3784-15
68A332	AMI	S68A332	3784-107
	Fairchild	F68A332	3784-110
	Motorola	**MCM68A332**	★ **4048**
			3784-112
68A332P2			
	Motorola	MCM68A332P2	
			3784-113
68A35	Motorola	MC68A35	1342-151
68A364	**AMI**	**S68A364**	★ **3933**
			3786-39
	Motorola	MCM68A364	3786-46
68A364P3			
	Motorola	MCM68A364P3	
			3786-47
68A39	Motorola	MC68A39	1343-7
68A40	AMI	S68A40	1343-64
	Fairchild	F68A40	1343-67
	Hitachi	HD68A40	1343-70
	Motorola	MC68A40	1343-74
	Thomson-CSF		
		EF68A40	1343-78
68A43	Hitachi	HD68A43	1343-10
68A44	Hitachi	HD68A44	1342-164
	Motorola	MC68A44	1343-1
68A45	Hitachi	HD68A45	1342-146
	Motorola	MC68A45	1342-152
68A46	Motorola	MC68A46	1343-86
68A488	Motorola	MC68A488	1343-17
68A50	AMI	S68A50	1342-114
			1354-117
	Fairchild	F68A50	1342-117
			1354-120
			(Continued)

Base Number	Source	Device	Page-Line
68A50	Hitachi	HD68A50	1342-120
	Motorola	MC68A50	1342-123
			1354-122
	Thomson-CSF		
		EF68A50	1342-125
			1355-1
68A52	AMI	S68A52	1343-101
	Fairchild	F68A52	1343-104
	Hitachi	HD68A52	1343-107
	Motorola	MC68A52	1343-110
	Thomson-CSF		
		EF68A52	1343-113
68A54	AMI	S68A54	1342-103
	Fairchild	**F68A54**	★ **1464**
			1342-108
	Motorola	MC68A54	1342-111
68A708	Motorola	MCM68A708	3763-115
68B00	AMI	S68B00	1342-90
	Fairchild	F68B00	1342-93
	Hitachi	HD68B00	1342-96
	Motorola	MC68B00	1342-99
68B01	**Motorola**	**MC68B01**	★ **1501**
			1342-43
	Motorola	MC68B01	1277-1
68B02	AMI	S68B02	1342-58
	Motorola	MC68B02	1342-66
68B03	**Motorola**	**MC68B03**	★ **1501**
			1342-26
	Motorola	MC68B03	1277-2
68B045	**AMI**	**S68B045**	★ **1452**
			1342-143
68B08	Motorola	MC68B08	1342-86
68B09	**AMI**	**S68B09**	★ **1448**
			1342-70
	AMI	S68B09	1267-12
	AMI	**S68B09(E)**	★ **1448**
			1342-49
	Fairchild	**F68B09**	★ **1459**
			1342-73
	Fairchild	F68B09	1269-1
	Fairchild	**F68B09E**	★ **1459**
			1342-52
	Fairchild	F68B09E	1269-2
	Hitachi	HD68B09	1342-76
	Motorola	MC68B09	1342-79
			¶ 276-16
		MC68B09E	1342-55
			¶ 276-16
			¶ 276-16
68B10	AMI	S68B10	3771-113
	Fairchild	F68B10	3771-114
	Motorola	**MCM68B10**	★ **4046**
			3771-115
			¶ 266-9
	Thomson-CSF		
		EF68B10	3771-117
68B20	Synertek	SY68B20	1343-54
68B21	AMI	S68B21	1343-36
			1355-23
	Fairchild	F68B21	1343-40
			1355-27
	Hitachi	HD68B21	1343-43
	Motorola	MC68B21	1343-48
			1355-30
	Synertek	SY68B21	1343-55
	Thomson-CSF		
		EF68B21	1343-58
			1355-36
68B29	Motorola	MC68B29	1343-28
68B30	Motorola	MCM68B30A	3783-49
68B308	Fairchild	F68B308	3783-47
	Motorola	MCM68B308	3783-48
68B316	AMI	S68B316	3784-28
68B35	Motorola	MC68B35	1342-153
68B364	**AMI**	**S68B364**	★ **3933**
			588-3
	AMI	S68B364	3785-82
	Motorola	MCM68B364	3785-90
68B39	Motorola	MC68B39	1343-8
68B40	AMI	S68B40	1343-65
	Fairchild	F68B40	1343-68
	Hitachi	HD68B40	1343-71
	Motorola	MC68B40	1343-75
	Thomson-CSF		
		EF68B40	1343-79

Base Number	Source	Device	Page-Line
68B44	Hitachi	HD68B44	1342-165
	Motorola	MC68B44	1343-2
68B45	Hitachi	HD68B45	1342-147
	Motorola	MC68B45	1342-154
68B46	Motorola	MC68B46	1343-87
68B488	Motorola	MC68B488	1343-18
68B50	AMI	S68B50	1342-115
			1354-118
	Fairchild	F68B50	1342-118
	Motorola	MC68B50	1342-124
			1354-123
	Thomson-CSF		
		EF68B50	1342-126
			1355-2
68B52	AMI	S68B52	1343-102
	Fairchild	F68B52	1343-105
	Motorola	MC68B52	1343-111
	Thomson-CSF		
		EF68B52	1343-114
68B54	AMI	S68B54	1342-104
	Fairchild	F68B54	1342-109
	Motorola	MC68B54	1342-112
68BASR010			
	Motorola	**M68BASR010M**	★ **1924**
68BSA1	**Motorola**	**M68BSA1-1**	★ **1920**
68BSA2	**Motorola**	**M68BSA2**	★ **1920**
68BSA3	**Motorola**	**M68BSA3**	★ **1920**
68BSA4	**Motorola**	**M68BSA4**	★ **1920**
68BSA5	**Motorola**	**M68BSA5**	★ **1920**
68BSA6	**Motorola**	**M68BSA6**	★ **1920**
68C40	Synertek	SY68C40	1343-76
68DSK2	**Motorola**	**M68DSK2**	★ **1925**
68DSK3	**Motorola**	**M68DSK3**	★ **1925**
68FTNR012			
	Motorola	**M68FTNR012M**	★ **1924**
68HC04	**Motorola**	**MC68HC04**	★ **1504**
68HC04P2			
	Motorola	**MC68HC04P2**	★ **1504**
68HC04P3			
	Motorola	**MC68HC04P3**	★ **1504**
68HC05	**Motorola**	**MC68HC05**	★ **1503**
68HC05C4			
	Motorola	**MC68HC05C4**	★ **1503**
68HC11	**Motorola**	**MC68HC11**	★ **1501**
68HC704			
	Motorola	**MC68HC704**	★ **1504**
68HC704P3			
	Motorola	**MC68HC704P3**	★ **1504**
68K1	Omnibyte	OB68K1A	1967-8
		OB68K1A-128	1967-25
		OB68K1A-32	1967-26
68K10	SBE	M68K10	1967-27
68KFD1102			
	Motorola	**M68KFD1102**	★ **1925**
68KHDS16			
	Motorola	**M68KHDS16-1**	★ **1925**
68KHDS32			
	Motorola	**M68KHDS32-1**	★ **1925**
68KHDS50			
	Motorola	**M68KHDS50-1**	★ **1925**
68KHDS96			
	Motorola	**M68KHDS96-1**	★ **1925**
68KORMS68			
	Motorola	**M68KORMS68K**	★ **2041**
68KVM01			
	Motorola	**M68KVM01A**	★ **2042**
68KVM02			
	Motorola	**M68KVM02**	★ **2042**
			1967-2
68KVM03			
	Motorola	**M68KVM03**	★ **2043**
68KVM10			
	Motorola	**M68KVM10**	★ **2043**
68KVM11			
	Motorola	**M68KVM11**	★ **2043**
68KVM20			
	Motorola	**M68KVM20**	★ **2043**
68KVM21			
	Motorola	**M68KVM21**	★ **2043**
68KVM30			
	Motorola	**M68KVM30**	★ **2043**
68KVM60			
	Motorola	**M68KVM60**	★ **2043**
68KVM80			
	Motorola	**M68KVM80**	★ **2043**
68MM01			
	Motorola	**M68MM01**	★ **2045**
			1959-12
			(Continued)

¶ Indicates page number in Application Note Directory.
★ Indicates addition data is provided on the page noted.

Base Number	Source	Device	Page-Line
68MM01			
	Motorola	**M68MM01B**	★2045
			★2045
			1959-29
		M68MM01D	★2045
			★2045
			1959-14
68MM01A2			
	Motorola	**M68MM01A2**	★2045
			1959-13
68MM01B1			
	Motorola	**M68MM01B1A**	★2045
			1959-30
68MM03			
	Motorola	**M68MM03**	★2046
68MM04			
	Motorola	**M68MM04**	★2046
		M68MM04A	★2046
68MM05			
	Motorola	**M68MM05**	★2045
		M68MM05A	★2045
		M68MM05B	★2045
68MM06			
	Motorola	**M68MM06**	★2046
68MM07			
	Motorola	**M68MM07**	★2046
68MM09			
	Motorola	**M68MM09**	★2046
68MM11			
	Motorola	**M68MM11**	★2045
68MM12			
	Motorola	**M68MM12**	★2046
		M68MM12-1	★2046
		M68MM12A	★2046
68MM13			
	Motorola	**M68MM13A**	★2045
		M68MM13B	★2046
		M68MM13C	★2046
		M68MM13D	★2046
68MM15			
	Motorola	**M68MM15A**	★2045
		M68MM15B	★2045
		M68MM15BEX	★2045
		M68MM15CV	★2045
68MM15A1			
	Motorola	**M68MM15A1**	★2045
68MM15C1			
	Motorola	**M68MM15C1**	★2045
68MM16			
	Motorola	**M68MM16-1**	★2046
		M68MM16-2	★2046
		M68MM16-3	★2046
68MM17			
	Motorola	M68MM17	1961-8
	Motorola	**MC68MM17**	★2045
68MM18			
	Motorola	**M68MM18**	★2046
68MM19			
	Motorola	M68MM19	1961-9
	Motorola	**M68MM19-1**	★2045
	Motorola	M68MM19A	1961-21
68MM19A1			
	Motorola	**M68MM19A1**	★2045
68MM21			
	Motorola	**M68MM21**	★2046
		M68MM21-1	★2046
68MM22			
	Motorola	**M68MM22**	★2046
68MMCC05			
	Motorola	**M68MMCC05**	★2046
68MMCC10			
	Motorola	**M68MMCC10**	★2046
68MMFLC1			
	Motorola	**M68MMFLC1**	★2046
68MMLC1			
	Motorola	**M68MMLC1**	★2046
68MMSC1			
	Motorola	**M68MMSC1**	★2046
68MPLR020			
	Motorola	**M68MPLR020M**	★1924
68P01	Hitachi	HD68P01	1271-14
68P05	Hitachi	HD68P05	1271-15
68PP5	**Motorola**	**M68PP5**	★1923
68RAD1			
	Motorola	**M68RAD1**	★2044
68RI01	**Motorola**	**M68RI01**	★2044
68RSC1	**Motorola**	**M68RSC1**	★2043

Base Number	Source	Device	Page-Line
68RTFR02			
	Motorola	**M68RTFR02M**	★1924
68RW1N1			
	Motorola	**M68RW1N1-2**	★2044
68RWIN1			
	Motorola	**M68RWIN1-1**	★2044
68SA2	**Motorola**	**MEX68SA2**	★1923
68SC08	Mitel	MD68SC08	1342-83
68SC20	Mitel	MD68SC20	1343-44
68SC21	Mitel	MD68SC21	1343-59
68SC22	Mitel	MD68SC22	1343-21
68SC23	Mitel	MD68SC23	1343-22
68SC40	Mitel	MD68SC40	1343-119
68SC49	Mitel	MD68SC49	1342-128
68SC84	Mitel	MD68SC84	1343-20
68SP702C10			
	Motorola	**M68SP702C10**	★1925
68SXD10155			
	Motorola	**M68SXD10155A**	★1925
69	RCIData	CMC69/04	1961-20
		CMC69/04A	1961-23
		CMC69/15	1961-18
690	Motorola	MC690	601-13
691	Motorola	MC691	602-37
6910	**OKI**	**MSM6910**	★4118
6912	**OKI**	**MSM6912**	★4118
			3217-83
	Panasonic	**AN6912**	★3557
			3163-16
6913	**Panasonic**	**AN6913**	★3557
6914	**Panasonic**	**AN6914**	★3557
6915	**Panasonic**	**AN6915**	★3557
6916	**Panasonic**	**AN6916**	★3557
6917	**OKI**	**MSM6917**	★4118
			3216-119
6918	**Panasonic**	**AN6918**	★3557
693	Motorola	MC693	601-93
			2683-52
696	Motorola	MC696	602-29
697	Motorola	MC697	601-14
699	Motorola	MC699	601-42
60V12	Lambda	L60V12	3235-104
60V15	Lambda	L60V15	3235-105
60V24	Lambda	L60V24	3235-106
60V28	Lambda	L60V28	3235-107
60V5	Lambda	L60V5	3235-108
60V6	Lambda	L60V6	3235-109
7	**Cromemco**	**Dc7A**	★2023
	Datel	**SHM-7MC**	★2864
			3238-1
		SHM-7MB	★2864
			3238-2
	STC	7CK	4466-27
		7CL	4466-21
		7CM	4466-26
	Supertex	DC-7	592-127
	TeledyneC	CAG7	2618-5
		CAG7-10	2618-6
70	**Burr-Brown**	**DAC70-CCD-I**	★2848
			2659-34
		DAC70-COB-I	★2848
			2659-21
		DAC70-CSB-I	★2848
			2659-19
		DAC70C-CCB-I	★2848
			2659-35
		DAC70C-COB-I	★2848
			2659-22
		DAC70C-CSB-I	★2848
			2659-20
	Intel	**BPK70**	★4022
			3768-3
	MCE	MCE70	3202-24
700	AnalogSys	MA700	3201-43
	AppMicroCir	Q700	4460-33
			4460-41
	Burr-Brown	**DAC700B**	★2848
			2658-31
		DAC700K	★2848
			2658-32
	ITT	TCA700	3166-22
	TeledyneS	**TSC700A**	★3092
			2663-8
	TI	**STL700**	★538
			4461-41

Base Number	Source	Device	Page-Line
7000	Cybernetic	CYP-7000	4351-9
	Exar	**XR7000**	★3385
			3155-122
	GI	PIC7000	1269-12
	Holt	HI7000	3167-43
	Rockwell	RC7000	1339-98
	SPI	**SP7000**	★4826
			4465-1
	Signetics	SAA7000	3164-39
	Signetics	**TDA7000**	★3663
			3168-118
	TI	**TMS7000**	★1704
			1343-134
	TI	TMS7000	1281-19
70003	MCE	MT70003	592-39
7001	NEC	uPD7001	2628-27
			1345-43
			1354-104
	SPI	**SP7001**	★4826
			4465-2
	TI	**TMS7001**	★1704
70014	MCE	MT70014	592-40
7002	NEC	uPD7002	2634-10
			1345-44
			1354-105
	SPI	**SP7002**	★4826
			4465-3
7003	**SPI**	**SP7003**	★4826
			4465-4
7004	**SPI**	**SP7004**	★4826
			4465-5
	SMC	CRT7004	3783-106
7005	**SPI**	**SP7005**	★4826
			4465-6
7007	**TI**	**TMS7007**	★1704
70090	**IntlMicCir**	**G70090**	★4747
			4463-43
701	**Burr-Brown**	**DAC701B**	★2848
			2658-52
		DAC701K	★2848
			2658-53
	TeledyneS	**TSC701AM**	★3093
			2662-143
7010	**SPI**	**SP7010**	★4826
			4465-7
	Signetics	SAA7010	3164-40
	Signetics	**TDA7010T**	★3666
			3168-119
7011	Sanyo	LA7011	3238-148
70120	**TI**	**TMS70120**	★1704
702	**Burr-Brown**	**DAC702B**	★2848
			2658-33
		DAC702K	★2848
			2658-34
	SGS	L702	3157-104
	TI	TL702C	3201-51
		TL702M	3197-34
7020	GI	PIC7020	1269-13
	Holt	HI7020	3167-45
	Signetics	SAA7020	3164-41
	TI	**TMS7020**	★1704
			1343-135
	TI	TMS7020	1281-20
70200	**IntlMicCir**	**G70200**	★4747
			4463-44
70250	**IntlMicCir**	**G70250**	★4747
			4463-45
7027	Intersil	IM7027-1	3768-18
		IM7027-3	3768-28
		IM7027-4	3768-37
703	**Burr-Brown**	**DAC703B**	★2848
			2658-54
		DAC703K	★2848
			2658-55
	Motorola	**MPRINT703**	★1925
7030	**LSIComp**	**LS7030**	★803
			640-57
	Signetics	SAA7030	3164-42
7031	**LSIComp**	**LS7031**	★803
			640-54
7033	NCR	NCR7033	3758-5
70360	**IntlMicCir**	**G70360**	★4747
			4463-46
7038	Intersil	ICM7038A	590-17
			3166-82
		ICM7038B	590-18
			(Continued)

Base Number	Source	Device	Page-Line
7038	Intersil	ICM7038B	3166-83
		ICM7038C	590-19
		ICM7038D	590-20
		ICM7038E	590-22
		ICM7038F	590-23
		ICM7038G	590-24
7040	Fairchild	FCM7040	3173-24
	GI	PIC7040	1269-14
	LSIComp	**LS7040**	★803
			640-49
	TI	**TMS7040**	★1704
			1343-88
			1343-136
	TI	TMS7040	1281-21
7041	GI	PIC7041	1269-15
	TI	**TMS7041**	★1704
			1343-139
	TI	TMS7041	1281-22
7042	Intech	7042H	3239-30
7045	Intersil	ICM7045	641-58
			3166-124
			3167-3
		ICM7045A	641-56
			3220-17
7047	Intersil	ICM7047	3167-8
7049	Intersil	ICM7049A	590-35
			3166-84
70490	**IntlMicCir**	**G70490**	★4747
			4463-47
7050	Intersil	ICM7050	590-36
			3166-85
	LSIComp	**LS7050**	★803
			640-52
	Mitel	CM7050	3218-37
7051	Intersil	ICM7051A	590-15
			3166-125
		ICM7051B	590-37
			3166-126
	Nitron	NC7051	3758-10
	Toshiba	TA7051	3172-25
7052	Intersil	ICM7052	590-38
			3166-127
7055	**LSIComp**	**LS7055/56**	★803
			640-53
	Nitron	NC7055	3758-20
7060	**LSIComp**	**LS7060**	★803
			640-60
			¶288-17
7061	**LSIComp**	**LS7061**	★803
			640-61
			¶288-17
	Toshiba	TA7061A	3156-127
7062	**LSIComp**	**LS7062**	★803
			640-50
7062210			
	TI	**TMDS7062210**	★1931
7063	Toshiba	TA7063	3165-141
70640	**IntlMicCir**	**G70640**	★4747
			4463-48
7069	Toshiba	TA7069	3172-173
707	MicroTech	707	4469-26
7070	Toshiba	TA7070	3170-43
7072	Fujitsu	MB7072E	598-27
			3772-77
		MB7072N	598-28
			3772-80
	Toshiba	TA7072	3172-26
7073	Toshiba	TA7073A	3172-27
7074	Toshiba	TA7074	3172-174
7075	Toshiba	TA7075	3172-175
7076	Toshiba	TA7076	3172-176
70810	**IntlMicCir**	**G70810**	★4747
			4463-49
7085	Toshiba	TA7085A	3229-81
7089	Toshiba	TA7089	3228-87
709	Fairchild	uA709AM	3191-46
		uA709C	3200-3
		uA709M	3196-44
	Motorola	MHW709	3156-54
	National	LM709	3196-46
		LM709A	3191-48
		LM709C	3200-4
	Raytheon	RC709	3200-5
		RM709	3193-24
		RM709A	3188-51
	TI	uA709AM	3191-50
			(Continued)

Arranged alphanumerically from left to right.

© IC MASTER 1984

Base Number	Source	Device	Page-Line
709	TI	uA709C	3199-62
		uA709M	3197-20
7090	**LSILogic**	**LL7090**	★4762
			4460-47
	National	DM7090	625-51
7091	National	DM7091	621-42
7092	National	DM7092	620-95
7093	National	DM7093	605-165
			¶ 258-15
7094	National	DM7094	605-140
7095	National	DM7095	606-26
7096	National	DM7096	606-168
7097	National	DM7097	606-27
7098	National	DM7098	606-169
7099	National	DM7099	621-33
70C00	GI	PIC70C00	1269-16
	TI	**TMS70C00**	★1704
			1343-129
70C20	GI	PIC70C20	1269-17
	TI	**TMS70C20**	★1704
			1343-130
70C40	**TI**	**TMS70C40**	★1704
			1343-89
			1343-137
70C95	National	MM70C95	573-50
70C96	National	MM70C96	573-176
70C97	National	MM70C97	573-51
70C98	National	MM70C98	573-177
70E40	TI	TMS70E40	1343-131
			1281-23
70L22	TI	TMS70L22	1343-138
			1281-24
70P161	**TI**	**SE70P161**	★1704
71	**AD**	**ADADC71J**	★2836
			★2838
			2636-34
		ADADC71K	★2836
			★2838
			2636-25
		ADDAC71-COB-I	★2827
			★2829
			2658-42
		ADDAC71-COB-V	
			★2827
			★2829
			2659-5
		ADDAC71-CSB-I	★2827
			★2829
			2658-43
		ADDAC71-CSB-V	
			★2827
			★2829
			2659-6
	Burr-Brown	**ADC71J**	★2848
			2636-46
		ADC71K	★2848
			2636-36
		DAC71-CCD-V	★2848
			2659-41
		DAC71-COB-V	★2848
			2659-42
		DAC71-CSB-V	★2848
			2659-9
	Datel	DAC-71-CCD-I	2659-36
		DAC-71-CCD-V	
			2659-39
		DAC-71-COB-I	2658-35
		DAC-71-COB-V	
			2659-1
		DAC-71-CSB-I	2658-36
		DAC-71-CSB-V	
			2659-2
	MicroNet	**DAC71**	★3044
			2652-44
	NEC	uPC71	3160-8
710	AppMicroCir	Q710	4460-32
			4460-40
	Fairchild	uA710C	3160-5
		uA710M	3159-23
	Motorola	MHW710	3156-55
	National	LM710	3159-25
		LM710C	3160-7
	SiliconG	SG710	3159-26
		SG710C	3160-9
	TI	TL710C	3160-24
			(Continued)

Base Number	Source	Device	Page-Line
710	TI	TL710M	3160-11
		uA710M	3159-27
7100	**LSIComp**	**LS7100**	★ 803
			2662-62
71000	**IntlMicCir**	**G71000**	★4747
			4463-50
	LSILogic	**LL71000**	★4762
			4461-2
71001	TI	VM71001	3169-79
71002	TI	VM71002	3169-80
71003	**TI**	**VM71003**	★1718
			3169-81
71004	**TI**	**VM71004A**	★1718
71005	**TI**	**VM71005A**	★1718
7101	Intersil	ICL7101	2637-30
7103	Intersil	ICL7103	2637-31
		ICL7103A	2637-51
			¶ 281-8
			¶ 307-14
			¶ 308-3
7104	Intersil	ICL7104-12	2635-33
			¶ 276-6
			¶ 281-8
			¶ 284-13
		ICL7104-14	2636-1
			¶ 276-6
			¶ 281-8
			¶ 284-13
		ICL7104-16	2636-48
			¶ 276-6
			¶ 281-8
			¶ 284-13
7106	**Intersil**	**ICL7106**	★2995
			2637-1
			¶ 284-17
			¶ 284-18
			¶ 308-2
			¶ 308-8
			¶ 308-13
	TeledyneS	TSC7106	2637-16
		TSC7106A	2637-17
7107	**Intersil**	**ICL7107**	★2995
			2637-2
			¶ 284-17
			¶ 284-18
			¶ 308-13
	TeledyneS	TSC7107	2637-18
		TSC7107A	2637-19
7109	Datel	ADC-7109	2634-22
	Intersil	**ICL7109**	★2996
			2634-15
			¶ 281-8
			¶ 284-18
	TeledyneS	**TSC7109BC**	★3094
			2634-16
		TSC7109C	★3094
			2634-17
		TSC7109M	★3094
			2634-18
711	**Datel**	**ST-711**	★2039
	Fairchild	uA711C	3161-36
		uA711M	3161-15
	National	LM711	3161-16
		LM711C	3161-38
	SiliconG	SG711	3161-17
		SG711C	3161-39
	TI	uA711C	3161-40
7110	**AD**	**AD7110K**	★2827
			★2829
			3164-23
	Intel	7110	3768-2
	LSIComp	**LS7110**	★ 803
			641-96
	LSIComp	LS7110	2624-38
	Panasonic	AN7110	3164-94
7111	**AD**	**AD7111K**	★2827
			3164-17
		AD7111L	★2827
			3164-18
		AD7111T	★2827
			3164-19
		AD7111U	★2827
			3164-20
7114	Intel	7114	3768-6
	Panasonic	AN7114	3164-95

Base Number	Source	Device	Page-Line
7115	**AD**	**AD7115K**	★2827
			3164-16
	Intersil	**ICL7115**	★2997
			2635-47
	Panasonic	AN7115	3164-96
7116	Intersil	ICL7116	2637-3
			¶ 284-17
	TeledyneS	TSC7116	2637-20
		TSC7116A	2637-21
7117	Fujitsu	MB7117E	3761-8
		MB7117H	3761-6
	Intersil	ICL7117	2637-4
			¶ 284-17
	TeledyneS	TSC7117	2637-22
7118	**AD**	**AD7118K**	★2827
			★2829
			3164-24
		AD7118L	★2827
			★2829
			3164-25
		AD7118T	★2827
			★2829
			3164-21
		AD7118U	★2827
			★2829
			3164-22
	Fujitsu	MB7118E	3761-9
		MB7118H	3761-7
712	TI	TL712	3236-46
7120	**MicroNet**	**MN7120**	★3042
			3233-12
		MN7120H	★3042
			3233-13
	Panasonic	AN7120	3164-97
	Sanyo	LC7120	3166-70
	Toshiba	TA7120	3165-142
7121	Fujitsu	MB7121E	3762-83
		MB7121H	3762-70
	National	DM7121	630-3
7122	Fujitsu	MB7122E	3762-87
		MB7122H	3762-72
	Toshiba	TA7122A	3165-143
		TA7122B	3165-144
7123	Fujitsu	MB7123E	3761-104
		MB7123H	3761-93
	National	DM7123	629-59
7124	Fujitsu	MB7124E	3761-110
		MB7124H	3761-99
	Toshiba	TA7124	3172-177
7125	Toshiba	TA7125	3172-50
7126	Intersil	ICL7126	2637-5
			¶ 284-17
	TeledyneS	TSC7126	2637-23
		TSC7126A	2637-24
	Toshiba	TA7126	3171-131
7127	Fujitsu	MB7127H	3764-20
		MB7127Y	3764-8
7128	Fujitsu	MB7128E	3764-35
		MB7128E-W	3760-3
			3764-36
		MB7128H	3764-22
		MB7128Y	3760-2
			3764-10
7129	**Intersil**	**ICL7129**	★2999
			2637-48
	Toshiba	TA7129	3165-145
		TA7129A	3165-146
7130	Fujitsu	MB7130E	3783-28
		MB7130H	3783-29
	MicroNet	**MN7130**	★3042
			3238-37
			¶ 280-11
		MN7130H	★3042
			3238-38
			¶ 280-11
	National	DM7130	603-147
	Panasonic	AN7130	3164-98
	Toshiba	TA7130	3172-28
7131	Fujitsu	MB7131E	3763-50
		MB7131H	3763-38
	National	DM7131	603-84
	Sanyo	LC7131	3166-72
7132	Fujitsu	MB7132E	3763-53
		MB7132E-W	3760-1
		MB7132H	3763-40
		MB7132Y	3763-33

Base Number	Source	Device	Page-Line
71324	Fujitsu	MB71324	3763-29
7133	Toshiba	TA7133	3215-7
7134	Fujitsu	MB7134E	3765-110
			3784-55
		MB7134H	3765-99
			3784-54
	Intersil	**ICL7134**	★3001
			2657-34
	Toshiba	TA7134	3171-132
7135	**Intersil**	**ICL7135**	★3003
			2637-49
	Sanyo	LC7135	3166-73
	Siliconix	**SI7135**	★3083
			2637-47
	TeledyneS	**TSC7135**	★3095
			2637-50
			¶ 284-11
	Toshiba	TA7135	3171-133
7136	Fujitsu	MB7136E	3783-97
		MB7136H	3783-96
	Intersil	**ICL7136**	★3005
			2637-6
	National	DM7136	603-86
	Toshiba	TA7136A	3165-147
7137	Fujitsu	MB7137E	3765-6
		MB7137H	3764-101
	Intersil	ICL7137	2637-7
	Toshiba	TA7137	3169-117
		TA7137-ST	3169-118
		TDA7137	3164-14
		TDA7137-ST	3164-15
7138	Fujitsu	MB7138E	3765-9
		MB7138E-W	3760-4
			3765-10
			3783-98
		MB7138H	3764-104
		MB7138YZ	3764-86
	MicroPwr	**MP7138**	★3046
			2637-8
		MP7138A	★3046
			2637-9
714	Fairchild	uA714	3182-46
		uA714C	3203-41
		uA714E	3182-53
	Raytheon	**RC714**	★3592
			3182-45
		RC714C	★3592
			3182-46
		RC714E	★3592
			3182-47
7140	**LSILogic**	**LL7140**	★4762
			4460-48
	MicroNet	**MN7140**	★3042
			3233-14
		MN7140H	★3042
			3233-15
	Toshiba	TA7140	3164-132
7141	Fujitsu	MB7141E	3766-7
		MB7141H	3766-3
	Intersil	IM7141	3780-120
		IM7141-2	3780-34
		IM7141-2M	3780-35
		IM7141-3	3780-86
		IM7141-3M	3780-87
		IM7141L	3780-121
		IM7141L-2	3780-36
		IM7141L-3	3780-88
		IM7141M	3780-122
	Toshiba	TA7141A	3171-20
7142	Fujitsu	MB7142E	3766-8
		MB7142E-W	3766-12
			3784-56
		MB7142H	3766-4
7143	Fujitsu	MB7143H	3766-69
7144	Fujitsu	MB7144E-W	3760-7
		MB7144H	3766-70
71440	**IntlMicCir**	**G71440**	★4747
			4464-2
7145	**Intersil**	**ICL7145**	★3007
			2658-51
	Panasonic	AN7145H	3165-104
		AN7145L	3165-76
		AN7145M	3165-89
	Toshiba	TA7145	3172-178
7146	**Intersil**	**ICL7146**	★3010
			2652-30
			(Continued)

¶ Indicates page number in Application Note Directory.
★ Indicates addition data is provided on the page noted.

Base Number	Source	Device	Page-Line
7146	Panasonic	AN7146H	3165-105
		AN7146M	3165-77
	Toshiba	TA7146	3172-29
7147	Toshiba	TA7147	3172-179
7148	Toshiba	TA7148	3171-21
7149	Toshiba	TA7149	3171-22
715	Fairchild	uA715C	3180-120
			3199-61
		uA715M	3180-121
			3197-22
7150	MicroNet	MN7150	★3042
			3233-39
	MicroPwr	MP7150	3167-51
	Toshiba	TA7150	3171-23
7151	Toshiba	TA7151	3171-105
7152	Fujitsu	MB7152-Y	3760-5
		MB7152E	3765-100
		MB7152E-W	3760-6
		MB7152H	3765-111
	Toshiba	TA7152	3172-98
7156	MicroPwr	MP7156	3166-69
			3214-88
	Panasonic	AN7156	3165-90
		AN7156N	3165-106
7157	Toshiba	TA7157A	3168-168
7158	Toshiba	TA7158	3235-47
716	Datel	ST-716	★2039
7160	MicroPwr	MP7160	3167-41
	National	DM7160	603-78
7161	Toshiba	TA7161	3171-24
7162	MicroPwr	MP7162	3173-88
	Toshiba	TA7162	3172-180
7163	ITT	ITT7163	2681-3
7164	ITT	ITT7164	2681-4
7165	Toshiba	TA7165	3173-138
7167	Toshiba	TA7167	3171-25
7168	Toshiba	TA7168	3171-26
71681L100			
	IDT	IDT71681L100	★3993
			3781-87
			3781-88
71681L45			
	IDT	IDT71681L45	★3993
			3781-11
			3781-12
71681L55			
	IDT	IDT71681L55	★3993
			3781-28
			3781-29
71681L70			
	IDT	IDT71681L70	★3993
			3781-50
			3781-51
71681L85			
	IDT	IDT71681L85	★3993
			3781-75
			3781-76
71681S100			
	IDT	IDT71681S100	★3993
			3781-89
			3781-90
71681S45			
	IDT	IDT71681S45	★3993
			3781-13
			3781-14
71681S55			
	IDT	IDT71681S55	★3993
			3781-30
			3781-31
71681S70			
	IDT	IDT71681S70	★3993
			3781-52
			3781-53
71681S85			
	IDT	IDT71681S85	★3993
			3781-77
			3781-78
71682L100			
	IDT	IDT71682L100	★3993
			3781-91
			3781-92
71682L45			
	IDT	IDT71682L45	★3993
			3781-15
71682L55			
	IDT	IDT71682L55	3781-32
			3781-33

Base Number	Source	Device	Page-Line
71682L70			
	IDT	IDT71682L70	★3993
			3781-54
			3781-55
71682L85			
	IDT	IDT71682L85	★3993
			3781-79
			3781-80
71682S100			
	IDT	IDT71682S100	★3993
			3781-93
			3781-94
71682S45			
	IDT	IDT71682S45	★3993
			3781-16
71682S55			
	IDT	IDT71682S55	★3993
			3781-34
			3781-35
71682S70			
	IDT	IDT71682S70	★3993
			3781-56
			3781-57
71682S85			
	IDT	IDT71682S85	★3993
			3781-81
			3781-82
7169	Toshiba	TA7169	3171-27
717	MicroTech	717	4469-27
7171	Toshiba	TA7171	3170-108
7172	Toshiba	TA7172	3170-109
7173	Toshiba	TA7173	3171-28
7174	Toshiba	TA7174	3171-29
7176	Toshiba	TA7176A	3172-30
7177	Toshiba	TA7177	3170-110
7178	Toshiba	TA7178	3170-111
7179	Toshiba	TA7179	3228-19
7180	Sprague	UDN-7180A	2663-128
7181	Sanyo	LC7181	3166-66
7183	Sprague	UDN-7183A	2662-139
7184	Sanyo	LC7184	3166-67
	Sprague	UDN-7184A	2662-140
71840	SEEQ	71840	★1603
			1348-22
	SEEQ	71840	1279-29
7186	Sprague	UDN-7186A	2662-141
71862L55			
	IDT	IDT71862L55	★3993
7189	MicroPwr	MP7189	3166-71
	Thomson-CSF		
		EFB7189	3219-96
7191	Sanyo	LC7191	3166-68
7192	Toshiba	TA7192	3171-30
7193	Toshiba	TA7193	3171-31
71960	IntMicCir	G71960	★4747
			4464-4
71LS95	National	DM71LS95	606-107
71LS97	National	DM71LS97	606-108
71S96	National	DM71S96	607-120
71S98	National	DM71S98	607-121
72	AD	ADADC72J	★2836
			★2838
			2636-35
		ADADC72K	★2836
			★2838
			2636-26
		ADDAC72-COB-I	★2827
			★2829
			2658-44
		ADDAC72-COB-V	
			★2827
			★2829
			2659-7
		ADDAC72-CSB-I	★2827
			★2829
			2658-45
		ADDAC72-CSB-V	
			★2827
			★2829
			2659-8
	Burr-Brown	ADC72A	★2848
			2636-43
		ADC72B	★2848
			2636-37
		ADC72J	★2848
			2636-44
		ADC72K	★2848
			(Continued)

Base Number	Source	Device	Page-Line
72	Burr-Brown	ADC72K	2636-45
		DAC72-CCD-V	★2848
			2659-43
		DAC72-COB-V	★2848
			2659-10
		DAC72-CSB-V	★2848
			2659-11
		DAC72C-CCD-I	★2848
			2659-38
		DAC72C-CCD-V	★2848
			2659-44
		DAC72C-COB-I	★2848
			2658-40
		DAC72C-COB-V	★2848
			2659-12
		DAC72C-CSB-I	★2848
			2658-41
		DAC72C-CSB-V	★2848
			2659-13
	Datel	DAC-72C-CCD-I	
			2659-37
		DAC-72C-CCD-V	
			2659-40
		DAC-72C-COB-I	
			2658-37
		DAC-72C-COB-V	
			2659-3
		DAC-72C-CSB-I	
			2658-38
		DAC-72C-CSB-V	
			2659-4
	Intel	BPK72	★4021
			3768-4
	MCE	MCE72	3209-23
720	AppMicroCir	Q720	4460-31
			4460-39
	ITT	TCA720	3173-142
	Reticon	RO720B	3234-43
7200	National	DM7200	603-28
	Sanyo	LC7200	3168-24
7201	Intersil	ICM7201	3234-134
	NEC	μPD7201	★1531
			2686-13
	NEC	uPD7201	1345-130
			1347-38
			1349-58
			1353-127
			1354-23
	Sanyo	LC7201	3168-25
7203	Sanyo	LC7203	3168-26
	Toshiba	TA7203	3165-82
7205	Intersil	ICM7205	3167-5
	Toshiba	TA7205A	3165-14
7206	Intersil	ICM7206A	★3524
			3219-65
		ICM7206B	★3524
			3219-66
		ICM7206C	★3524
			3219-67
		ICM7206D	★3524
			3219-68
7207	Intersil	ICM7207	590-12
		ICM7207A	590-13
			¶ 308-5
	Sanyo	LC7207	3168-27
	Toshiba	TA7207	3164-133
7208	Intersil	ICM7208	576-51
			¶ 308-5
	Toshiba	TA7208	3164-134
7209	Intersil	ICM7209	★3015
			590-9
	Intersil	ICM7209	2679-32
721	TI	TL721	3236-47
7210	Intersil	ICM7210	3167-18
		ICM7210C	3167-19
		ICM7210M	3167-20
		ICM7210MC	3167-21
	LSIComp	LS7210	★803
			592-116
	LSIComp	LS7210	3220-26
	National	DM7210	630-7
			¶ 257-11
	NEC	μPD7210	★1535
			1351-121
			1355-19
	Sanyo	LC7210	3167-133
			(Continued)

Base Number	Source	Device	Page-Line
7210	Sanyo	LC7210	3214-127
	SPI	SP7210	★4826
			4465-8
	Toshiba	TA7210	3165-67
7211	Hughes	HLCD7211-1	2662-117
		HLCD7211-2	2662-118
		HLCD7211-3	2663-1
		HLCD7211-4	2663-2
	Intersil	ICM7211	★779
			579-154
	Intersil	ICM7211	2662-146
	Intersil	ICM7211A	★779
			579-155
	Intersil	ICM7211A	2662-147
	Intersil	ICM7211AM	★779
			579-149
	Intersil	ICM7211AM	2662-131
	Intersil	ICM7211M	★779
			579-150
	Intersil	ICM7211M	2662-132
	National	DM7211	630-8
	TeledyneS	TSC7211A	2663-7
		TSC7211AM	2662-133
7212	Intersil	ICM7212	★779
			579-164
	Intersil	ICM7212	2662-135
	Intersil	ICM7212A	★779
			579-165
	Intersil	ICM7212A	2662-136
	Intersil	ICM7212AM	★779
			579-166
	Intersil	ICM7212AM	2662-137
	Intersil	ICM7212M	★779
			579-167
	Intersil	ICM7212M	2662-138
	TeledyneS	TSC7212A	2662-144
		TSC7212AM	2662-145
7213	Intersil	ICM7213	★780
	Panasonic	AN7213	3168-31
7214	Intersil	ICM7214	3167-54
		ICM7214A	3167-55
	National	DM7214	627-163
			¶ 258-15
	Toshiba	TA7214	3165-83
7215	Intersil	ICM7215	641-57
			3167-6
	Toshiba	TA7215	3165-84
7216	IDT	IDT7216	★4012
			571-163
	Intersil	ICM7216	★781
			577-134
		ICM7216A	★781
			640-44
		ICM7216B	★781
			640-45
		ICM7216C	★781
			640-55
		ICM7216D	★781
			640-56
	MicroPwr	MP7216	3167-44
7217	IDT	IDT7217	★4012
			571-164
	Intersil	ICM7217	★782
			577-82
		ICM7217A	★782
			577-83
		ICM7217B	★782
			577-86
			640-39
		ICM7217C	★782
			577-87
			640-40
	Toshiba	TA7217A	3165-15
7218	Intersil	ICM7218A	★786
			641-91
	Intersil	ICM7218A	2661-64
	Intersil	ICM7218B	★786
			641-92
	Intersil	ICM7218B	2661-65
	Intersil	ICM7218C	★786
			641-93
	Intersil	ICM7218C	2661-66
	Intersil	ICM7218D	★786
			641-94
	Intersil	ICM7218D	2661-67
			(Continued)

Arranged alphanumerically from left to right.

© IC MASTER 1984

Base Number	Source	Device	Page-Line
7218	**Intersil**	**ICM7218E**	★ **786**
			641-95
	Intersil	ICM7218E	2661-68
	Panasonic	AN7218	3167-146
7219	National	DM7219	630-90
722	Burr-Brown	722	3233-60
7220	Intel	7220	2679-16
			1352-85
	Intersil	ICM7220	3167-22
		ICM7220A	3167-46
			¶ 305-13
		ICM7220B	3167-23
		ICM7220C	3167-40
		ICM7220FA	3167-47
		ICM7220M	3167-24
		ICM7220MA	3167-25
		ICM7220MC	3167-26
		ICM7220MFA	3167-48
	LSIComp	**LS7220**	★ **803**
			3173-25
			¶ 253-11
	LSILogic	**LL7220**	★ **4762**
			4460-49
	National	DM7220	639-108
	NEC	**μPD7220**	★ **1538**
			1352-106
			1353-132
	Sanyo	LC7220	3167-134
			3214-128
7221	Intersil	ICM7221	3167-49
7222	Intersil	ICM7222	3167-50
	Toshiba	TA7222A	3165-16
7223	Intersil	ICM7223	3166-101
		ICM7223A	3166-102
		ICM7223VF	3166-103
	National	DM7223	613-39
	Toshiba	TA7223	3169-113
7224	**Intersil**	**ICM7224**	★ **789**
			577-71
		ICM7224A	★ **789**
			577-72
	Toshiba	TA7224	3169-140
7225	**Intersil**	**ICM7225**	★ **789**
			577-73
		ICM7225A	★ **789**
			577-74
	LSIComp	**LS7225**	★ **803**
			3173-26
	Sanyo	LC7225	3167-135
			3214-129
	Toshiba	TA7225	3169-139
7226	**Intersil**	**ICM7226**	★ **796**
			577-135
		ICM7226A	★ **796**
			640-46
		ICM7226B	★ **796**
			640-47
	LSIComp	**LS7226**	★ **803**
			3173-27
7227	**Intersil**	**ICM7227**	★ **782**
			577-84
		ICM7227A	★ **782**
			577-85
		ICM7227B	★ **782**
			577-88
			640-41
		ICM7227C	★ **782**
			577-89
			640-42
	Toshiba	TA7227	3165-103
7228	**LSIComp**	**LS7228**	★ **803**
			3173-28
7229	**LSIComp**	**LS7229**	★ **803**
			3173-29
	Toshiba	TA7229	3169-141
723	Fairchild	uA723C	3229-6
		uA723M	3229-7
	Intersil	uA723	3229-8
	Lambda	LAS723	3229-35
		LAS723B	3229-54
			¶ 311-13
	National	LM723	3229-11
		LM723C	3229-12
	Raytheon	RC723	3229-13
		RM723	3229-14
	RCA	**CA723**	★ **3602**
			(Continued)

Base Number	Source	Device	Page-Line
723	**RCA**	**CA723**	**3229-15**
		CA723C	★ **3602**
			3229-16
	Signetics	SA723C	3229-17
		uA723	3229-18
		uA723C	3229-19
	SiliconG	SG723	3229-20
		SG723C	3229-21
	TI	uA723C	3229-22
		uA723M	3229-23
7230	Intel	7230	2679-21
	National	DM7230	612-4
			¶ 258-15
7231	**Intersil**	**ICM7231**	★ **798**
			2663-111
	LSIComp	**LS7231**	★ **803**
			3173-123
7232	**Intersil**	**ICM7232**	★ **798**
			2663-145
	LSIComp	**LS7232**	★ **803**
			3173-124
7233	**Intersil**	**ICM7233**	★ **798**
			2662-121
	LSIComp	**LS7233**	★ **803**
			3173-125
7234	**Intersil**	**ICM7234**	★ **798**
			2663-24
	LSIComp	**LS7234**	★ **803**
			3173-126
7235	Intersil	ICM7235	2662-125
		ICM7235A	2662-126
		ICM7235AM	2662-127
		ICM7235M	2662-128
	LSIComp	**LS7235**	★ **803**
			3173-127
7236	Intersil	ICM7236	577-76
		ICM7236A	577-70
	LSIComp	**LS7236**	★ **803**
7237	**LSIComp**	**LS7237**	★ **803**
7238	Toshiba	TA7238	3165-17
724	Analogic	AD/AM-724	2635-45
	Burr-Brown	724	3233-61
7240	**AD**	**AD7240J**	★ **2820**
			★ **2825**
			2655-12
		AD7240K	★ **2820**
			★ **2825**
			2654-45
		AD7240S	★ **2820**
			★ **2825**
			2655-13
		AD7240T	★ **2820**
			★ **2825**
			2654-46
	Intersil	ICM7240	3220-22
	LSIComp	**LS7240**	★ **803**
			640-26
7241	Motorola	MC7241	624-157
7242	Intel	7242	2684-47
	Intersil	ICM7242	3220-23
	Motorola	MC7242	625-25
	Toshiba	TA7242	3172-99
7243	**Intersil**	**ICM7243**	★ **3017**
			2663-87
	Toshiba	TA7243	3172-31
7245	Intersil	ICM7245	3167-9
725	Fairchild	uA725A	3182-66
		uA725AM	3187-9
		uA725C	3191-62
		uA725E	3182-67
		uA725M	3188-49
	National	LM725	3188-50
		LM725A	3189-7
		LM725C	3191-63
	NEC	uPC725	3191-64
	PMI	PM-725	3188-47
		PM-725C	3192-1
	Raytheon	RC725	3192-2
		RM725	3188-48
7250	Intel	7250	2679-24
	Intersil	ICM7250	3220-24
	Motorola	MC7250	612-23
	Sanyo	LC7250	3168-28
	Siliconix	**SI7250**	★ **3080**
			2622-47
			(Continued)

Base Number	Source	Device	Page-Line
7250	**Siliconix**	**SI7250**	**2679-25**
			¶ 289-3
7253	Sanyo	LC7253	3167-138
7254	Intel	7254	2679-31
			2683-17
	Siliconix	**VQ7254**	★ **3085**
			2683-26
	Supertex	VQ7254	2683-31
7255	NEC	uPD7255	2664-21
7257	Sanyo	LC7257	3167-139
7258	Sanyo	LC7258	3167-140
726	Fairchild	uA726C	3238-117
		uA726M	3238-118
7260	Intersil	ICM7260	3220-25
	Motorola	MC7260	604-13
7261	**LSIComp**	**LS7261**	★ **803**
	Motorola	MC7261	603-156
7263	**LSIComp**	**LS7263**	★ **803**
			3173-51
			3234-150
			3235-3
7265	**NEC**	**μPD7265**	★ **1549**
			1353-107
7266	Motorola	MC7266	628-78
	Panasonic	AN7266	3167-147
7267	Motorola	MC7267	629-55
7269	Intersil	ICM7269	3167-27
727	Fairchild	uA727C	3156-33
		uA727M	3156-34
	MicroTech	727	4469-28
7270	Intersil	ICM7270	3167-28
	LSIComp	LS7270	1351-146
			1355-44
	Motorola	MC7270	631-112
			3788-55
	SGS	TDA7270	3169-138
			¶ 302-9
7271	Intersil	ICM7271	3167-52
	Motorola	MC7271	631-120
			3788-56
72710	**SEEQ**	**72710**	★ **1597**
			1343-132
	SEEQ	72710	1279-30
7272	Intersil	ICM7272	3167-29
	LSIComp	**LS7272**	★ **803**
72720	SEEQ	72720	1343-133
7273	Intersil	ICM7273	3167-53
728	**Datel**	**ST-728**	★ **2039**
7280	Motorola	MC7280	609-175
	National	DM7280	609-180
7281	**Intersil**	**ICM7281**	★ **3020**
			2661-41
	Motorola	MC7281	607-127
	National	DM7281	607-133
7288	National	DM7288	611-108
7290	National	DM7290	609-181
7291	National	DM7291	607-134
72C19	National	MM72C19	589-69
72HM185			
	Intersil	72HM185C	3783-92
73	Apex	PA73	3175-59
			3176-139
			3201-14
	Burr-Brown	**ADC73J**	★ **2848**
			2636-29
		ADC73K	★ **2848**
			2636-23
		DAC73J	★ **2848**
			2658-29
730	Signetics	TCA730A	3164-31
	Unitrode	PIC730	3231-43
7302	Toshiba	TA7302	3168-55
7303	AMD	DP7303	2677-19
	National	DP7303	2677-27
	Thomson-CSF		
		EFB7303	3218-110
	Toshiba	TA7303	3168-56
7304	AMD	DP7304B	2677-5
	National	DP7304	1345-68
		DP7304B	2677-28
7306	Toshiba	TA7306	3167-121
7307	AMD	DP7307	2677-20
	National	DP7307	2677-29
7308	AMD	DP7308	2677-21
	National	DP7308	2677-30

Base Number	Source	Device	Page-Line
731	**Burr-Brown**	**ADC731J**	★ **2848**
			2636-28
		ADC731K	★ **2848**
			2636-22
7310	National	DP7310	2683-111
	Thomson-CSF		
		EFB7310	2622-66
			3216-142
	Toshiba	TA7310	3214-59
731000	**NEC**	**μPD731000**	★ **4116**
			3787-108
7311	National	DP7311	2683-112
	Panasonic	AN7311	3165-164
7312	Toshiba	TA7312	3165-177
73128	**NEC**	**μPD73128**	★ **4114**
			3787-43
7314	Toshiba	TA7314	3172-32
7315	Toshiba	TA7315	3172-55
7316	Toshiba	TA7316	3221-5
7317	Toshiba	TA7317	3173-84
7318	Toshiba	TA7318	3173-81
732	**Datel**	**ST-732**	★ **2039**
7320	**LSILogic**	**LL7320**	★ **4762**
			4460-50
	Toshiba	TA7320	3232-92
7322	Toshiba	TA7322	3165-148
7324	Toshiba	TA7324	3164-46
7325	Toshiba	TA7325	3165-178
7326	Toshiba	TA7326	3220-56
7327	Toshiba	TA7327	3220-57
733	Fairchild	uA733C	3156-85
		uA733M	3156-86
	Intersil	uA733	3156-87
		uA733C	3156-88
	National	LM733	3156-94
	Signetics	uA733	3156-115
		uA733C	3156-116
	SiliconG	SG733	3156-121
		SG733C	3156-122
	TI	uA733C	3156-125
		uA733M	3156-126
7330	Toshiba	TA7330	3169-147
7331	Thomson-CSF		
		EF7331	3218-111
	Toshiba	TA7331	3169-142
7332	Fairchild	uA7332	3165-18
	Intersil	IM7332	3784-85
		IM7332C	3783-121
	Thomson-CSF		
		EF7332	3218-112
			3218-113
	Toshiba	TA7332	3173-82
7334	Thomson-CSF		
		EFB7334	3218-109
7335	Thomson-CSF		
		EFB7335	3219-48
	Toshiba	TA7335	3168-35
7336	Thomson-CSF		
		EFB7336	3218-115
734	Fairchild	uA734C	3160-12
		uA734M	3159-35
7343	Toshiba	TA7343	3168-172
7356	Thomson-CSF		
		EFB7356	3216-57
736	**Burr-Brown**	**DAC736J**	★ **2848**
			2658-28
		DAC736K	★ **2848**
			2658-21
7364	Intersil	IM7364C	3786-43
737	MicroTech	737	4469-29
738	SGS	M738	3167-64
738000	NEC	uPD738000	3787-103
739	Fairchild	UA739	3165-153
		uA739	3165-154
			3209-5
7392	Fairchild	uA7392	3173-50
			3235-2
			¶ 307-13
73HC42	Fairchild	73HC42	578-26
74	Amperex	BGY74	3170-62
	Burr-Brown	**DAC74**	★ **2848**
	MCE	MCE74	3212-3
	Motorola	**MC74HCSeries**	★ **624**
740	Intersil	uA740	3202-58
		uA740C	3203-20
	SGS	M740	3167-65
			(Continued)

¶ Indicates page number in Application Note Directory.
★ Indicates addition data is provided on the page noted.

Base Number	Source	Device	Page-Line
740	Signetics	TCA740A	3164-32
	Unitrode	PIC740	3231-44
7400	Fairchild	7400	621-150
	Ferranti	ZN7400	621-152
	Hitachi	HD7400	621-153
	Motorola	MC7400	621-154
	National	DM7400	621-156
			¶ 287-6
	Signetics	**7400**	★ **860**
			621-159
	TI	**SN7400**	★ **920**
			621-161
			¶ 290-2
	Toshiba	TC7400B	583-123
7401	Fairchild	7401	621-75
	Ferranti	ZN7401	621-79
	Hitachi	HD7401	621-81
	Motorola	MC7401	621-83
	National	DM7401	621-87
	TI	**SN7401**	★ **920**
			621-96
	Toshiba	TA7401A	3168-169
7402	Fairchild	7402	624-41
	Ferranti	ZN7402	624-44
	Hitachi	HD7402	624-46
	Motorola	MC7402	624-47
	National	DM7402	624-49
	Signetics	**7402**	★ **860**
			624-52
	TI	**SN7402**	★ **920**
			624-56
	Toshiba	TA7402	3167-128
7403	Fairchild	7403	621-76
	Ferranti	ZN7403	621-80
	Hitachi	HD7403	621-82
	Motorola	MC7403	621-84
	National	DM7403	621-88
	Signetics	**7403**	★ **860**
			621-91
	TI	**SN7403**	★ **921**
			621-97
7404	Fairchild	7404	607-41
	Ferranti	ZN7404	607-43
	Hitachi	HD7404	607-44
	Motorola	MC7404	607-45
	National	DM7404	607-47
	Signetics	**7404**	★ **860**
			607-50
	TI	**SN7404**	★ **921**
			607-56
	Toshiba	TC7404UB	574-35
7405	Fairchild	7405	606-118
	Ferranti	ZN7405	606-120
	Hitachi	HD7405	606-121
	Motorola	MC7405	606-122
	National	DM7405	606-124
	Signetics	**7405**	★ **860**
			606-126
	TI	**SN7405**	★ **921**
			606-129
7406	Fairchild	7406	614-71
	Hitachi	HD7406	614-72
	Motorola	MC7406	614-73
	National	DM7406	614-75
	Signetics	**7406**	★ **860**
			614-77
	TI	**SN7406**	★ **922**
			614-79
7407	Fairchild	7407	614-48
	Hitachi	HD7407	614-49
	Motorola	MC7407	614-50
	National	DM7407	614-52
	Signetics	**7407**	★ **860**
			614-54
	TI	**SN7407**	★ **922**
			614-56
7408	Fairchild	7408	619-80
	Ferranti	ZN7408	619-82
	Hitachi	HD7408	619-83
	Motorola	MC7408	619-84
	National	DM7408	619-86
	Signetics	**7408**	★ **860**
			619-88
	TI	**SN7408**	★ **922**
			619-90
7409	Fairchild	7409	619-43
	Ferranti	ZN7409	619-45
	Hitachi	HD7409	619-46
	Motorola	MC7409	619-47
	National	DM7409	619-49
	TI	**SN7409**	★ **923**
			619-51
741	**AD**	**AD741**	★ **3351**
			3175-25
			3196-48
		AD741C	★ **3351**
			3198-41
		AD741J	★ **3351**
			3193-21
		AD741K	★ **3351**
			3191-45
		AD741L	★ **3351**
			3187-7
		AD741S	★ **3351**
			3191-29
	Fairchild	uA741	3175-26
		uA741AM	3187-29
		uA741C	3198-43
		uA741EC	3187-28
		uA741M	3196-49
	Intersil	ICL741	3175-27
			3196-50
		ICL741CHS	3198-61
		ICL741CLN	3199-8
		ICL741LN	3196-58
		ICL741MHS	3196-42
	National	LM741	3175-30
			3196-52
		LM741A	3193-17
		LM741C	3198-46
		LM741E	3193-18
	NEC	uPC741	3175-31
			3198-48
	PMI	PM-741	3175-33
			3196-53
		PM-741C	3198-49
	Raytheon	RC741	3175-39
			3198-50
		RM741	3196-54
	RCA	CA741	3175-35
		CA741C	3198-51
	SGS	M741	3167-66
	Signetics	SA741C	3199-7
		uA741	3175-36
			3196-55
		uA741C	3198-52
	SiliconG	SG741	3175-37
			3196-56
		SG741C	3198-53
		SG741S	3197-15
		SG741SC	3199-3
	TI	uA741C	3198-54
		uA741M	3196-57
7410	Fairchild	7410	620-121
	Ferranti	ZN7410	620-123
	Hitachi	HD7410	620-124
	Motorola	MC7410	620-127
	National	DM7410	620-129
	Signetics	**7410**	★ **860**
			620-132
	TI	**SN7410**	★ **923**
			620-135
	Toshiba	TC7410B	583-62
74100	Motorola	MC74100	625-70
	TI	**SN74100**	★ **955**
			625-72
74107	Fairchild	74107	617-97
	Ferranti	ZN74107	617-101
	Hitachi	HD74107	617-103
	Motorola	MC74107	617-105
	National	DM74107	617-109
	Signetics	**74107**	★ **860**
			617-113
	TI	**SN74107**	★ **957**
			617-117
74109	National	DM74109	617-45
	Signetics	**74109**	★ **860**
			617-47
	TI	**SN74109**	★ **958**
			617-49
			(Continued)
74109	**TI**	**SN74109A**	★ **958**
			2671-8
7411	Fairchild	7411	618-176
	National	DM7411	618-179
	Signetics	**7411**	★ **860**
			618-180
74110	**TI**	**SN74110**	★ **958**
			617-4
74111	**TI**	**SN74111**	★ **959**
			617-154
74116	**Signetics**	**74116**	★ **860**
			625-65
	TI	**SN74116**	★ **960**
			625-69
74118	Ferranti	ZN74118	625-153
74119	Ferranti	ZN74119	625-154
7412	Fairchild	7412	620-98
	Ferranti	ZN7412	620-100
	Hitachi	HD7412	620-101
	TI	**SN7412**	★ **924**
			620-103
74120	Motorola	MC74120	637-105
	TI	**SN74120**	★ **961**
			637-107
74121	Fairchild	74121	630-96
	Ferranti	ZN74121	630-98
	Hitachi	HD74121	630-99
	Motorola	MC74121	630-100
	National	DM74121	630-102
	Signetics	**74121**	★ **860**
			630-104
	TI	**SN74121**	★ **961**
			630-106
74122	Fairchild	74122	630-121
	Ferranti	ZN74122	630-123
	Motorola	MC74122	630-124
	TI	**SN74122**	★ **961**
			630-126
74123	Fairchild	74123	630-159
	Ferranti	ZN74123	630-161
	Hitachi	HD74123	630-162
	Motorola	MC74123	630-163
	National	DM74123	630-165
	Signetics	**74123**	★ **861**
			630-167
	TI	**SN74123**	★ **962**
			630-169
74125	Fairchild	74125	605-162
	Hitachi	HD74125	605-163
	National	DM74125	605-166
	Signetics	**74125**	★ **861**
			605-169
	TI	**SN74125**	★ **963**
			605-172
74126	Fairchild	74126	605-138
	Hitachi	HD74126	605-139
	Signetics	**74126**	★ **861**
			605-143
	TI	**SN74126**	★ **963**
			605-146
74128	**Signetics**	**74128**	★ **861**
			614-26
	Signetics	74128	2671-23
	TI	**SN74128**	★ **964**
			614-28
	TI	SN74128	2671-24
7413	Fairchild	7413	637-127
	Ferranti	ZN7413	637-129
	Hitachi	HD7413	637-130
	Motorola	MC7413	637-131
	National	DM7413	637-133
	Signetics	**7413**	★ **860**
			637-135
	TI	**SN7413**	★ **924**
			637-137
74132	Fairchild	74132	638-18
	Hitachi	HD74132	638-19
	Motorola	MC74132	638-20
	National	DM74132	638-22
	Signetics	**74132**	★ **861**
			638-24
	TI	**SN74132**	★ **965**
			638-26
74136	Hitachi	HD74136	624-129
	Motorola	MC74136	624-130
			(Continued)
74136	**TI**	**SN74136**	★ **966**
			624-133
7414	Fairchild	7414	638-53
	Hitachi	HD7414	638-54
	Motorola	MC7414	638-55
	National	DM7414	638-57
	Signetics	**7414**	★ **860**
			638-59
	TI	**SN7414**	★ **924**
			638-61
74141	Fairchild	74141	2662-87
	Hitachi	HD74141	2662-88
	Motorola	MC74141	2662-90
	National	DM74141	2662-92
	TI	SN74141	2662-93
74142	TI	SN74142	611-155
74143	**TI**	**SN74143**	★ **970**
			611-157
74144	**TI**	**SN74144**	★ **970**
			611-159
74145	Fairchild	74145	612-50
	Hitachi	HD74145	612-51
	Motorola	MC74145	612-52
	National	DM74145	612-54
	Signetics	**74145**	★ **861**
			612-56
	TI	**SN74145**	★ **970**
			612-58
74147	Hitachi	HD74147	639-112
	National	DM74147	639-114
	Signetics	**74147**	★ **861**
			639-116
	TI	**SN74147**	★ **970**
			639-118
74148	Hitachi	HD74148	639-29
	National	DM74148	639-33
	Signetics	**74148**	★ **861**
			639-37
	TI	**SN74148**	★ **971**
			639-41
74150	Fairchild	74150	630-75
	Ferranti	ZN74150	630-77
	Hitachi	HD74150	630-78
	Motorola	MC74150	630-79
	National	DM74150	630-81
	Signetics	**74150**	★ **861**
			630-83
	TI	**SN74150**	★ **971**
			630-85
74151	Fairchild	74151	629-146
	Ferranti	ZN74151	629-148
	Hitachi	HD74151	629-149
	Motorola	MC74151	629-150
	National	DM74151A	629-152
	Signetics	**74151**	★ **861**
			629-154
	TI	**SN74151A**	★ **972**
			629-156
74152	Motorola	MC74152	630-6
	TI	**SN74152A**	★ **972**
			630-12
74153	Fairchild	74153	628-27
	Ferranti	ZN74153	628-29
	Hitachi	HD74153	628-30
	Motorola	MC74153	628-33
	National	DM74153	628-35
	Signetics	**74153**	★ **861**
			628-37
	TI	**SN74153**	★ **972**
			628-39
74154	Ferranti	ZN74154	613-109
	Hitachi	HD74154	613-110
	Motorola	MC74154	613-111
	National	DM74154	613-115
	Signetics	**74154**	★ **861**
			613-119
	TI	**SN74154**	★ **973**
			613-123
74155	Fairchild	74155	613-11
	Ferranti	ZN74155	613-13
	Hitachi	HD74155	613-14
	Motorola	MC74155	613-15
	National	DM74155	613-17
	Signetics	**74155**	★ **861**
			613-18
			(Continued)

Arranged alphanumerically from left to right.

© IC MASTER 1984

Base Number	Source	Device	Page-Line
74155	TI	**SN74155**	★ **974**
			613-20
74156	Fairchild	74156	612-164
	Hitachi	HD74156	612-165
	Motorola	MC74156	612-166
	National	DM74156	612-168
	Signetics	**74156**	★ **861**
			612-170
	TI	**SN74156**	★ **974**
			612-172
74157	Fairchild	74157	628-197
	Hitachi	HD74157	629-2
	Motorola	MC74157	629-3
	National	DM74157	629-7
	Signetics	**74157**	★ **861**
			629-13
	TI	**SN74157**	★ **975**
			629-17
74158	**Signetics**	**74158**	★ **861**
			628-126
74159	Hitachi	HD74159	613-129
	TI	**SN74159**	★ **976**
			613-131
7416	Fairchild	7416	614-59
	Hitachi	HD7416	614-60
	Motorola	MC7416	614-61
	National	DM7416	614-63
	Signetics	**7416**	★ **860**
			614-67
	TI	**SN7416**	★ **925**
			614-69
74160	Fairchild	74160	610-22
	Hitachi	HD74160	610-25
	Motorola	MC74160	610-26
	National	DM74160A	610-30
	Signetics	**74160**	★ **861**
			610-34
	TI	**SN74160**	★ **977**
			610-39
			¶ 254-11
74161	Fairchild	74161	607-179
	Ferranti	ZN74161	607-183
	Hitachi	HD74161	607-184
	Motorola	MC74161	607-186
	National	DM74161A	607-190
	Signetics	**74161**	★ **861**
			608-2
	TI	**SN74161**	★ **977**
			608-7
			¶ 254-11
74162	Fairchild	74162	610-73
	Hitachi	HD74162	610-74
	Motorola	MC74162	610-75
	National	DM74162A	610-77
	TI	**SN74162**	★ **978**
			610-79
			¶ 254-11
74163	Fairchild	74163	608-42
	Ferranti	ZN74163	608-44
	Hitachi	HD74163	608-45
	Motorola	MC74163A	608-46
	National	DM74163	608-48
	Signetics	**74163**	★ **861**
			608-50
	TI	**SN74163**	★ **978**
			608-52
			¶ 254-11
74164	Fairchild	74164	632-21
			3790-83
	Ferranti	ZN74164	632-23
			3790-86
	Hitachi	HD74164	632-24
			3790-87
	National	DM74164	632-26
			3790-93
	Signetics	**74164**	★ **861**
			632-30
	Signetics	74164	3790-99
	TI	**SN74164**	★ **979**
			632-32
	TI	SN74164	3790-103
74165	Fairchild	74165	632-76
			3790-28
	Ferranti	ZN74165	632-78
	Motorola	MC74165	632-79
			3790-29
			(Continued)

Base Number	Source	Device	Page-Line
74165	National	DM74165	632-81
			3790-31
	Signetics	**74165**	★ **861**
			632-83
	Signetics	74165	3790-33
	TI	**SN74165**	★ **979**
			632-85
	TI	SN74165	3790-35
74166	Fairchild	74166	632-96
			3790-38
	Ferranti	ZN74166	632-98
	Hitachi	HD74166	632-99
			3790-40
	National	DM74166	632-101
			3790-44
	Signetics	**74166**	★ **861**
			632-103
	Signetics	74166	3790-46
	TI	**SN74166**	★ **979**
			632-105
	TI	SN74166	3790-50
74167	Fairchild	74167	637-79
	Motorola	MC74167	637-80
	TI	**SN74167**	★ **980**
			637-82
7417	Fairchild	7417	614-38
	Hitachi	HD7417	614-39
	Motorola	MC7417	614-40
	National	DM7417	614-42
	Signetics	**7417**	★ **860**
			614-44
	TI	**SN7417**	★ **925**
			614-46
74170	Fairchild	74170	627-6
			3770-25
	Ferranti	ZN74170	627-8
			3770-28
	National	DM74170	627-9
			3770-33
	Signetics	**74170**	★ **861**
			627-11
	TI	**SN74170**	★ **981**
			627-13
	TI	SN74170	3770-40
74172	TI	**SN74172**	★ **982**
			627-41
	TI	SN74172	3770-62
74173	Fairchild	74173	615-122
	Hitachi	HD74173	615-123
	National	DM74173	615-125
	Signetics	**74173**	★ **861**
			615-129
	TI	**SN74173**	★ **982**
			615-133
74174	Fairchild	74174	615-146
	Ferranti	ZN74174	615-149
	Hitachi	HD74174	615-150
	Motorola	MC74174	615-151
	National	DM74174	615-153
	Signetics	**74174**	★ **861**
			615-155
	TI	**SN74174**	★ **983**
			615-157
74175	Fairchild	74175	615-37
	Ferranti	ZN74175	615-39
	Hitachi	HD74175	615-40
	Motorola	MC74175	615-41
	National	DM74175	615-43
	Signetics	**74175**	★ **861**
			615-45
	TI	**SN74175**	★ **983**
			615-47
74176	Fairchild	74176	609-171
	Hitachi	HD74176	609-173
	Motorola	MC74176	609-176
	National	DM74176	609-182
	TI	**SN74176**	★ **984**
			610-2
74177	Fairchild	74177	607-124
	Hitachi	HD74177	607-126
	Motorola	MC74177	607-128
	National	DM74177	607-135
	TI	**SN74177**	★ **984**
			607-146
74178	Fairchild	74178	3788-67
	TI	**SN74178**	★ **984**
			(Continued)

Base Number	Source	Device	Page-Line
74178	TI	**SN74178**	**631-117**
	TI	SN74178	3788-94
74179	Fairchild	74179	631-119
			3788-68
	TI	**SN74179**	★ **985**
			631-127
	TI	SN74179	3788-95
74180	Fairchild	74180	639-66
	Ferranti	ZN74180	639-68
	Hitachi	HD74180	639-69
	Motorola	MC74180	639-70
	National	DM74180	639-72
	Signetics	**74180**	★ **861**
			639-76
	TI	**SN74180**	★ **985**
			639-80
74181	Motorola	MC74181	604-21
	Signetics	**74181**	★ **861**
			604-24
	TI	**SN74181**	★ **985**
			604-26
74182	Hitachi	HD74182	604-76
	Motorola	MC74182	604-77
	National	DM74182	604-79
	TI	**SN74182**	★ **986**
			604-81
			¶ 323-19
74184	Ferranti	ZN74184	637-100
	National	DM74184	637-102
	TI	**SN74184**	★ **987**
			637-104
	TI	SN74184	3756-13
74185	National	DM74185A	637-94
	TI	**SN74185A**	★ **988**
			637-97
	TI	SN74185A	3756-2
74186	TI	SN74186	3760-60
74187	TI	SN74187	3783-5
74188	TI	SN74188A	3760-49
74190	Fairchild	74190	611-72
	Hitachi	HD74190	611-73
	Motorola	MC74190	611-74
	National	DM74190	611-76
	Signetics	**74190**	★ **861**
			611-78
	TI	**SN74190**	★ **989**
			611-80
74191	Fairchild	74191	609-29
	Ferranti	ZN74191	609-31
	Hitachi	HD74191	609-32
	Motorola	MC74191	609-33
	National	DM74191	609-35
	Signetics	**74191**	★ **861**
			609-37
	TI	**SN74191**	★ **989**
			609-39
74192	Fairchild	74192	611-32
	Ferranti	ZN74192	611-34
	Hitachi	HD74192	611-35
	Motorola	MC74192	611-36
	National	DM74192	611-38
	Signetics	**74192**	★ **861**
			611-42
	TI	**SN74192**	★ **990**
			611-44
74193	Fairchild	74193	609-80
	Ferranti	ZN74193	609-82
	Hitachi	HD74193	609-83
	Motorola	MC74193	609-84
	National	DM74193	609-86
	Signetics	**74193**	★ **861**
			609-90
	TI	**SN74193**	★ **990**
			609-92
74194	Fairchild	74194	631-149
			3788-69
	Ferranti	ZN74194	631-151
	Hitachi	HD74194	631-152
			3788-73
	Motorola	MC74194	631-153
			3788-76
	National	DM74194	631-155
			3788-79
	Signetics	**74194**	★ **861**
			631-157
	Signetics	74194	3788-83
			(Continued)

Base Number	Source	Device	Page-Line
74194	TI	**SN74194**	★ **990**
			631-159
	TI	SN74194	3788-96
74195	Fairchild	74195	631-42
			3788-106
	Hitachi	HD74195	631-45
			3788-114
	Motorola	MC74195	631-46
			3788-116
	National	DM74195	631-50
			3788-128
	Signetics	**74195**	★ **861**
			631-54
	Signetics	74195	3789-6
	TI	**SN74195**	★ **991**
			631-57
	TI	SN74195	3789-12
74196	Fairchild	74196	609-172
	Hitachi	HD74196	609-174
	Motorola	MC74196	609-177
	National	DM74196	609-183
	TI	**SN74196**	★ **991**
			610-3
74197	Fairchild	74197	607-125
	Motorola	MC74197	607-129
	National	DM74197	607-136
	TI	**SN74197**	★ **992**
			607-147
74198	Fairchild	74198	632-57
			3789-111
	Hitachi	HD74198	632-58
			3789-113
	National	DM74198	632-60
			3789-117
	TI	**SN74198**	★ **992**
			632-62
	TI	SN74198	3789-122
74199	Fairchild	74199	632-65
			3789-112
	Hitachi	HD74199	632-66
			3789-114
	National	DM74199	632-68
			3789-118
	Signetics	**74199**	★ **861**
			632-70
	Signetics	74199	3789-119
	TI	**SN74199**	★ **993**
			632-72
	TI	SN74199	3789-123
7420	Fairchild	7420	620-37
	Ferranti	ZN7420	620-39
	Hitachi	HD7420	620-40
	Motorola	MC7420	620-41
	National	DM7420	620-43
	Signetics	**7420**	★ **860**
			620-46
	TI	**SN7420**	★ **926**
			620-48
	Toshiba	TC7420B	583-13
7421	Fairchild	7421	618-118
	Signetics	**7421**	★ **860**
			618-119
7422	Fairchild	7422	620-2
	Hitachi	HD7422	620-3
	TI	**SN7422**	★ **927**
			620-5
74221	Hitachi	HD74221	630-140
	Signetics	**74221**	★ **861**
			630-142
	TI	**SN74221**	★ **994**
			630-144
7423	Fairchild	7423	623-145
	Hitachi	HD7423	623-146
	Motorola	MC7423	623-147
	National	DM7423	623-149
	TI	**SN7423**	★ **927**
			623-151
7424	Intel	7424	2679-30
74246	TI	**SN74246**	★ **1001**
			2662-31
74247	TI	**SN74247**	★ **1001**
			2662-15
74248	TI	**SN74248**	★ **1002**
			2661-139
74249	TI	**SN74249**	★ **1002**
			2661-106

¶ Indicates page number in Application Note Directory.
★ Indicates addition data is provided on the page noted.

Base Number	Source	Device	Page-Line
7425	Fairchild	7425	623-133
	Ferranti	ZN7425	623-135
	Hitachi	HD7425	623-136
	Motorola	MC7425	623-137
	National	DM7425	623-139
	Signetics	**7425**	★ **860**
			623-141
	TI	**SN7425**	★ **928**
			623-143
74251	Hitachi	HD74251	630-31
	National	DM74251	630-33
	TI	**SN74251**	★ **1003**
			630-35
74259	National	DM74259	626-16
	TI	**SN74259**	★ **1005**
			626-22
7426	Fairchild	7426	613-164
	Hitachi	HD7426	613-165
	Motorola	MC7426	613-166
	National	DM7426	613-168
	Signetics	**7426**	★ **860**
			614-2
	TI	**SN7426**	★ **928**
			614-4
74265	**TI**	**SN74265**	★ **1007**
			638-12
7427	Fairchild	7427	623-172
	Ferranti	ZN7427	623-174
	Hitachi	HD7427	623-175
	Motorola	MC7427	623-176
	National	DM7427	623-178
	Signetics	**7427**	★ **860**
			623-180
	TI	**SN7427**	★ **929**
			623-182
74273	**TI**	**SN74273**	★ **1007**
			616-64
74276	**TI**	**SN74276**	★ **1008**
			618-113
74278	**TI**	**SN74278**	★ **1009**
			638-136
74279	Fairchild	74279	625-131
	Hitachi	HD74279	625-132
	Signetics	74279	625-134
	TI	**SN74279**	★ **1009**
			625-136
7428	Ferranti	ZN7428	624-45
	Signetics	**7428**	★ **860**
			624-53
	TI	**SN7428**	★ **929**
			624-57
74283	Fairchild	74283	605-68
	~~Ferranti~~	~~ZN74283A~~	~~605-72~~
	Hitachi	HD74283	605-74
	TI	SN74283	605-83
			¶ 323-19
74284	**TI**	**SN74284**	★ **1011**
			604-124
			¶ 323-19
74285	**TI**	**SN74285**	★ **1011**
			604-121
			¶ 323-19
74290	Fairchild	74290	609-125
	Hitachi	HD74290	609-129
	Motorola	MC74290	609-131
	TI	**SN74290**	★ **1012**
			609-139
74293	Fairchild	74293	608-101
	Hitachi	HD74293	608-107
	Motorola	MC74293	608-109
	TI	**SN74293**	★ **1014**
			608-117
74298	Fairchild	74298	629-62
	Motorola	MC74298	629-63
	~~**Signetics**~~	~~**74298**~~	~~★ **862**~~
			629-65
	TI	**SN74298**	★ **1015**
			629-67
7430	Fairchild	7430	622-20
	Ferranti	ZN7430	622-22
	Hitachi	HD7430	622-23
	LSILogic	**LL7430**	★ **4762**
			4460-51
	Motorola	MC7430	622-24
	National	DM7430	622-26
	Signetics	**7430**	★ **860**
			(Continued)

Base Number	Source	Device	Page-Line
7430	**Signetics**	**7430**	**622-27**
	TI	**SN7430**	★ **929**
			622-29
7432	Fairchild	7432	623-77
	Ferranti	ZN7432	623-79
	Hitachi	HD7432	623-80
	National	DM7432	623-82
	Signetics	**7432**	★ **860**
			623-84
	TI	**SN7432**	★ **930**
			623-86
7433	**Signetics**	**7433**	★ **860**
			624-22
	TI	**SN7433**	★ **930**
			624-24
74351	**TI**	**SN74351**	★ **1020**
			628-77
74365	National	DM74365	606-170
	Signetics	**74365A**	★ **862**
			606-34
	TI	**SN74365A**	★ **1023**
			606-38
74366	National	DM74366	606-28
			614-90
	Signetics	**74366A**	★ **862**
			606-176
			614-94
	TI	**SN74366A**	★ **1023**
			606-180
74367	National	DM74367	606-29
			614-91
	Signetics	**74367A**	★ **862**
			606-35
			614-95
	TI	**SN74367A**	★ **1024**
			606-39
			614-98
74368	National	DM74368	606-171
	Signetics	**74368A**	★ **862**
			~~606-177~~
	TI	**SN74368A**	★ **1024**
			606-181
7437	Fairchild	7437	621-36
	Ferranti	ZN7437	621-38
	Hitachi	HD7437	621-39
	Motorola	MC7437	621-40
	National	DM7437	621-43
	Signetics	**7437**	★ **860**
			621-46
	TI	**SN7437**	★ **932**
			621-48
~~74378~~	~~**TI**~~	~~**SN74378**~~	~~★ **1027**~~
			618-111
74379	**Signetics**	**74379**	★ **862**
7438	Fairchild	7438	620-179
	Ferranti	ZN7438	620-182
	Hitachi	HD7438	620-183
	Motorola	MC7438	620-184
	National	DM7438	620-186
	Signetics	**7438**	★ **860**
			620-189
	TI	**SN7438**	★ **932**
			620-193
7439	Fairchild	7439	620-180
	Signetics	**7439**	★ **860**
			620-190
	TI	**SN7439**	★ **932**
			620-194
74390	**TI**	**SN74390**	★ **1031**
			610-125
74393	**TI**	**SN74393**	★ **1031**
			608-83
7440	Fairchild	7440	619-147
	Ferranti	ZN7440	619-149
	Hitachi	HD7440	619-150
	Motorola	MC7440	619-151
	National	DM7440	619-153
	Signetics	**7440**	★ **860**
			619-156
	TI	**SN7440**	★ **933**
			619-158
74408	Motoroia	MC74408	639-7
7441	Fairchild	7441	2662-81
	National	DM7441A	2662-83
	TeledyneS	TSC7441S	2653-44

Base Number	Source	Device	Page-Line
7442	Fairchild	7442	612-67
	Ferranti	ZN7442	612-73
	Hitachi	HD7442A	612-74
	Motorola	MC7442	612-75
	National	DM7442	612-79
	Signetics	**7442**	★ **860**
			612-87
	TI	**SN7442A**	★ **933**
			612-92
74425	**TI**	**SN74425**	★ **1034**
			605-173
74426	**TI**	**SN74426**	★ **1034**
			605-147
7443	Fairchild	7443	612-13
	Hitachi	HD7443A	612-14
	Motorola	MC7443	612-15
	TI	**SN7443A**	★ **934**
			612-18
7444	Hitachi	HD7444A	612-7
	Motorola	MC7444	612-8
	TI	**SN7444A**	★ **934**
			612-11
7445	Fairchild	7445	612-40
	Hitachi	HD7445	612-41
	Motorola	MC7445	612-42
	National	DM7445	612-44
	Signetics	**7445**	★ **860**
			612-46
	TI	**SN7445**	★ **934**
			612-48
74452	Motorola	MC74452	610-153
74453	Motorola	MC74453	608-81
74454	Motorola	MC74454	611-105
74455	Motorola	MC74455	609-123
74456	Motorola	MC74456	603-5
7446	Fairchild	7446	2662-21
	Hitachi	HD7446A	2662-24
	Motorola	MC7446	2662-25
	National	DM7446A	2662-27
			¶ 288-8
	TI	**SN7446A**	★ **935**
			2662-32
74460	Motorola	MC74460	636-139
74468	Motorola	MC74468	636-110
			2684-48
7447	Fairchild	7447	2661-156
	Hitachi	HD7447A	2661-161
	Motorola	MC7447	2661-164
	National	DM7447A	2662-5
			¶ 288-8
	TI	**SN7447A**	★ **935**
			2662-16
~~7448~~	~~Fairchild~~	~~7448~~	~~2661-119~~
	Motorola	MC7448	2661-120
	National	DM7448	2661-130
	TI	**SN7448**	★ **935**
			2661-140
7449	Motorola	MC7449	2661-93
	TI	**SN7449**	★ **935**
			2661-107
74490	**TI**	**SN74490**	★ **1043**
			610-126
7450	Fairchild	7450	622-96
	Ferranti	ZN7450	622-98
	Hitachi	HD7450	622-99
	Motorola	MC7450	622-100
	National	DM7450	622-102
	Signetics	**7450**	★ **860**
			622-105
	TI	**SN7450**	★ **936**
			622-107
7451	Fairchild	7451	622-115
	Ferranti	ZN7451	622-117
	Hitachi	HD7451	622-118
	Motorola	MC7451	622-119
	National	DM7451	622-121
	Nitron	NC7451	3758-55
	SGS	LS7451	622-144
	Signetics	**7451**	★ **860**
			622-123
	TI	SN7451	622-126
745175	**TI**	**SN745175**	★ **983**
7453	Fairchild	7453	623-30
	Ferranti	ZN7453	623-32
	Hitachi	HD7453	623-33
	Motorola	MC7453	623-34
			(Continued)

Base Number	Source	Device	Page-Line
7453	National	DM7453	623-36
	TI	**SN7453**	★ **937**
			623-38
7454	Fairchild	7454	623-19
	Ferranti	ZN7454	623-21
	Hitachi	HD7454	623-22
	Motorola	MC7454	623-23
	National	DM7454	623-25
	TI	**SN7454**	★ **938**
			623-28
7460	Fairchild	7460	622-159
	Hitachi	HD7460	622-160
	Motorola	MC7460	622-161
	National	DM7460	622-163
	TI	**SN7460**	★ **940**
			622-166
747	Fairchild	uA747AM	3206-7
		uA747C	3208-34
		uA747EC	3206-8
		uA747M	3207-35
	National	LM747	3207-39
		LM747A	3206-9
		LM747C	3208-38
		LM747E	3206-10
	PMI	PM-747	3207-41
	Raytheon	RC747	3208-43
		RM747	3207-43
	RCA	CA747	3207-45
		CA747C	3208-44
	SGS	M747	3167-67
	Signetics	SA747C	3208-62
		uA747	3207-47
		uA747C	3208-45
	SiliconG	SG747	3207-49
		SG747C	3208-46
	TI	uA747C	3208-47
		uA747M	3207-51
7470	Fairchild	7470	616-183
	Ferranti	ZN7470	616-185
	Motorola	MC7470	616-186
	National	DM7470	616-188
	TI	**SN7470**	★ **943**
			617-2
7472	Fairchild	7472	617-6
	Ferranti	ZN7472	617-8
	Hitachi	HD7472	617-9
	Motorola	MC7472	617-10
	National	DM7472	617-12
	TI	**SN7472**	★ **944**
			617-14
7473	Fairchild	7473	617-98
	Ferranti	ZN7473	617-102
	~~Hitachi~~	~~HD7473~~	~~617-104~~
	Motorola	MC7473	617-106
	National	DM7473	617-110
	Signetics	**7473**	★ **860**
			617-114
	TI	**SN7473**	★ **944**
			617-118
7474	Fairchild	7474	614-152
	Ferranti	ZN7474	614-154
	Hitachi	HD7474	614-155
	Motorola	MC7474	614-156
	National	DM7474	614-158
	Signetics	**7474**	★ **860**
			614-160
	TI	SN7474	614-162
7475	Fairchild	7475	625-82
	Ferranti	ZN7475	625-84
	Hitachi	HD7475	625-85
	Motorola	MC7475	625-86
	National	DM7475	625-88
	Signetics	**7475**	★ **860**
			625-90
	TI	~~**SN7475**~~	~~★ **946**~~
			625-92
7476	Fairchild	7476	617-156
	Ferranti	ZN7476	617-158
	Hitachi	HD7476	617-159
	Motorola	MC7476	617-160
	National	DM7476	617-162
	Signetics	**7476**	★ **860**
			617-164
	TI	~~**SN7476**~~	~~★ **946**~~
			617-166
	Toshiba	TC7476B	582-59

Arranged alphanumerically from left to right.

© IC MASTER 1984

Base Number	Source	Device	Page-Line
7477	Motorola	MC7477	625-116
748	Fairchild	uA748C	3198-55
		uA748M	3197-7
	Intersil	uA748C	3198-56
	National	LM748	3197-9
		LM748C	3197-10
	RCA	CA748	3197-11
		CA748C	3198-58
	SiliconG	SG748	3197-12
		SG748C	3198-59
	TI	uA748C	3198-60
		uA748M	3197-13
7480	Motorola	MC7480	603-161
	TI	**SN7480**	★ **948**
			603-163
7481	**TI**	**SN7481A**	★ **948**
			627-2
	TI	SN7481A	3770-63
7482	Fairchild	7482	604-5
	Ferranti	ZN7482	604-7
	Motorola	MC7482	604-8
	TI	**SN7482**	★ **948**
			604-10
7483	Fairchild	7483	605-69
	Ferranti	ZN7483A	605-73
	Hitachi	HD7483A	605-75
	Motorola	MC7483	605-76
	National	DM7483	605-78
			¶ 250-7
	Signetics	**7483**	★ **860**
			605-80
	TI	**SN7483A**	★ **949**
			605-84
7484	**TI**	**SN7484A**	★ **949**
			627-4
	TI	SN7484A	3770-64
7485	Fairchild	7485	603-43
	Ferranti	ZN7485	603-48
	Hitachi	HD7485	603-49
	Motorola	MC7485	603-51
	National	DM7485	603-58
	Signetics	**7485**	★ **860**
			603-65
	TI	**SN7485**	★ **950**
			603-70
7486	Fairchild	7486	624-153
	Ferranti	ZN7486	624-155
	Hitachi	HD7486	624-156
	Motorola	MC7486	624-158
	National	DM7486	624-161
	Signetics	**7486**	★ **860**
			624-166
	TI	**SN7486**	★ **950**
			624-168
7488	TI	SN7488A	3783-1
7489	AMD	SN7489	3770-122
		SN7489-1	3770-98
	Ferranti	ZN7489	627-57
	Hitachi	HD7489	3771-34
	National	DM7489B	627-58
	TI	**SN7489**	★ **951**
			627-61
	TI	SN7489	3771-35
749	Fairchild	uA749	3165-155
		uA749C	3206-15
		uA749D	3209-32
7490	Fairchild	7490	609-126
	Ferranti	ZN7490A	609-128
	Hitachi	HD7490A	609-130
	Motorola	MC7490	609-132
	National	DM7490	609-134
			¶ 258-15
	Signetics	**7490**	★ **860**
			609-136
	TI	**SN7490A**	★ **952**
			609-140
7491	Fairchild	7491	632-136
			3790-114
	Ferranti	ZN7491	632-138
			3790-116
	Hitachi	HD7491A	632-139
	Motorola	MC7491	632-140
		MC7491A	3790-118
	National	DM7491A	632-142
		SN7491A	3790-120
	Signetics	**7491**	★ **860**
			(Continued)

Base Number	Source	Device	Page-Line
7491	**Signetics**	**7491**	**632-144**
	Signetics	7491	3790-122
	TI	**SN7491A**	★ **952**
			632-146
	TI	SN7491A	3790-125
7492	Fairchild	7492	611-111
	Ferranti	ZN7492A	611-113
	Hitachi	HD7492A	611-114
	Motorola	MC7492	611-115
	National	DM7492A	611-117
	Signetics	**7492**	★ **860**
			611-120
	TI	**SN7492A**	★ **952**
			611-122
7493	Fairchild	7493	608-102
	Ferranti	ZN7493A	608-106
	Hitachi	HD7493A	608-108
	Motorola	MC7493	608-110
	National	DM7493A	608-112
	Signetics	**7493**	★ **860**
			608-114
	TI	**SN7493A**	★ **953**
			608-118
7494	Fairchild	7494	631-142
			3789-58
	Ferranti	ZN7494	3789-60
		ZN7494A	631-143
	Motorola	MC7494	631-144
			3789-61
	Signetics	**7494**	★ **860**
			631-145
	Signetics	7494	3789-63
	TI	**SN7494**	★ **953**
			631-147
	TI	SN7494	3789-65
7495	Fairchild	7495	631-82
			3788-70
	Ferranti	ZN7495A	631-84
			3788-72
	Hitachi	HD7495A	631-85
			3788-74
	Motorola	MC7495A	631-88
			3789-16
	National	DM7495	631-90
			3788-80
	Signetics	**7495A**	★ **860**
			631-92
	Signetics	7495A	3788-84
	TI	**SN7495A**	★ **954**
			631-94
	TI	SN7495A	3788-97
7496	Fairchild	7496	631-188
			3789-81
	Ferranti	ZN7496	632-1
			3789-83
	Hitachi	HD7496	632-2
			3789-84
	Motorola	MC7496	632-3
			3789-85
	National	DM7496	632-5
			3789-87
	Signetics	**7496**	★ **860**
			632-7
	Signetics	7496	3789-90
	TI	**SN7496**	★ **954**
			632-9
	TI	SN7496	3789-93
7497	Fairchild	7497	638-157
	Motorola	MC7497	638-158
	TI	**SN7497**	★ **954**
			638-160
74ALS00			
	Hitachi	HD74ALS00	621-162
	Motorola	**SN74ALS00**	★ **822**
			621-164
	National	DM74ALS00	621-166
	TI	SN74ALS00	621-169
	TI	**SN74ALS00A**	★ **920**
74ALS01			
	Hitachi	HD74ALS01	621-98
	Motorola	**SN74ALS01**	★ **822**
			621-102
	TI	**SN74ALS01**	★ **920**
			621-107

Base Number	Source	Device	Page-Line
74ALS02			
	Motorola	**SN74ALS02**	★ **822**
			624-60
	National	DM74ALS02	624-63
	TI	**SN74ALS02**	★ **920**
			624-67
74ALS03			
	Hitachi	HD74ALS03	621-99
	Motorola	**SN74ALS03**	★ **822**
			621-103
	TI	**SN74ALS03**	★ **921**
			621-108
74ALS04			
	Motorola	**SN74ALS04**	★ **822**
			607-58
	National	DM74ALS04	607-60
	TI	**SN74ALS04**	★ **921**
			607-63
74ALS05			
	Motorola	**SN74ALS05**	★ **822**
			606-131
	TI	**SN74ALS05**	★ **921**
			606-134
74ALS08			
	Hitachi	HD74ALS08	619-91
	Motorola	**SN74ALS08**	★ **822**
			619-94
	National	DM74ALS08	619-98
	TI	**SN74ALS08**	★ **922**
			619-102
74ALS09			
	Hitachi	HD74ALS09	619-52
	Motorola	**SN74ALS09**	★ **822**
			619-54
	TI	**SN74ALS09**	★ **923**
			619-56
74ALS10			
	Motorola	**SN74ALS10**	★ **822**
			620-137
	TI	**SN74ALS10**	★ **923**
			620-140
74ALS1000			
	TI	**SN74ALS1000**	★ **1114**
			621-170
74ALS1002			
	TI	**SN74ALS1002**	★ **1114**
			624-68
74ALS1003			
	TI	**SN74ALS1003**	★ **1115**
			621-109
74ALS1004			
	TI	**SN74ALS1004**	★ **1115**
			607-64
74ALS1005			
	TI	**SN74ALS1005**	★ **1115**
			606-135
74ALS1008			
	TI	**SN74ALS1008**	★ **1116**
			619-103
74ALS1010			
	TI	**SN74ALS1010**	★ **1116**
			620-141
74ALS1011			
	TI	**SN74ALS1011**	★ **1116**
			619-4
74ALS1020			
	TI	**SN74ALS1020**	★ **1117**
			620-54
74ALS1032			
	TI	**SN74ALS1032**	★ **1117**
			623-93
74ALS1034			
	TI	**SN74ALS1034**	★ **1118**
			606-43
74ALS1035			
	TI	**SN74ALS1035**	★ **1118**
			606-23
74ALS109			
	Hitachi	HD74ALS109	617-50
	Motorola	**SN74ALS109**	★ **823**
			617-52
	National	DM74ALS109	617-54
	TI	**SN74ALS109**	★ **958**
			617-56
74ALS11			
	Motorola	**SN74ALS11**	★ **822**
			619-1
			(Continued)

Base Number	Source	Device	Page-Line
74ALS11			
	TI	**SN74ALS11**	★ **923**
			619-5
74ALS112			
	TI	**SN74ALS112**	★ **959**
			618-44
74ALS113			
	TI	**SN74ALS113**	★ **959**
			618-5
74ALS114			
	TI	**SN74ALS114**	★ **960**
			618-81
74ALS12			
	Motorola	**SN74ALS12**	★ **822**
			620-105
	TI	**SN74ALS12**	★ **924**
			620-107
74ALS1240			
	TI	**SN74ALS1240**	★ **1119**
			633-153
74ALS1241			
	TI	**SN74ALS1241**	★ **1119**
			634-24
74ALS1242			
	TI	**SN74ALS1242**	★ **1119**
			633-77
74ALS1243			
	TI	**SN74ALS1243**	★ **1120**
			633-78
74ALS1244			
	TI	**SN74ALS1244**	★ **1120**
			634-76
74ALS1245			
	TI	**SN74ALS1245**	★ **1120**
			635-83
74ALS13			
	Motorola	**SN74ALS13**	★ **822**
			637-139
74ALS131			
	TI	**SN74ALS131**	★ **964**
			613-102
74ALS132			
	Motorola	**SN74ALS132**	★ **823**
			638-28
74ALS133			
	TI	**SN74ALS133**	★ **965**
			622-72
74ALS137			
	TI	**SN74ALS137**	★ **967**
			613-91
74ALS138			
	Motorola	**SN74ALS138**	★ **823**
			613-43
	TI	**SN74ALS138**	★ **968**
			613-47
74ALS139			
	Motorola	**SN74ALS139**	★ **823**
			612-125
	TI	**SN74ALS139**	★ **968**
			612-128
74ALS14			
	Motorola	**SN74ALS14**	★ **822**
			638-63
74ALS15			
	Motorola	**SN74ALS15**	★ **822**
			618-149
	TI	**SN74ALS15**	★ **925**
			618-151
74ALS151			
	Motorola	**SN74ALS151**	★ **823**
			629-158
	TI	SN74ALS151	629-160
74ALS153			
	Motorola	**SN74ALS153**	★ **823**
			628-41
	TI	**SN74ALS153**	★ **972**
			628-43
74ALS157			
	Motorola	**SN74ALS157**	★ **823**
			629-19
	TI	**SN74ALS157**	★ **975**
			629-21
74ALS158			
	Motorola	**SN74ALS158**	★ **823**
			628-128
	TI	**SN74ALS158**	★ **975**
			628-130

¶ Indicates page number in Application Note Directory.
★ Indicates addition data is provided on the page noted.

Base Number	Source	Device	Page-Line
74ALS160			
	Motorola	SN74ALS160 ★	823 610-41
	National	DM74ALS160	610-43
	TI	SN74ALS160 ★	977 610-45
74ALS161			
	Motorola	SN74ALS161 ★	823 608-9
	National	DM74ALS161	608-11
	TI	SN74ALS161 ★	977 608-13
74ALS1616			
	TI	SN74ALS1616 ★	1121 605-28
74ALS162			
	Motorola	SN74ALS162 ★	823 610-83
	National	DM74ALS162	610-89
	TI	SN74ALS162 ★	978 610-93
74ALS1620			
	TI	SN74ALS1620 ★	1122 636-66
		SN74ALS1620-1 ★	1122 636-67
74ALS1621			
	TI	SN74ALS1621 ★	1122 636-34
		SN74ALS1621-1 ★	1122 636-35
74ALS1622			
	TI	SN74ALS1622 ★	1122 636-36
		SN74ALS1622-1 ★	1122 636-37
74ALS1623			
	TI	SN74ALS1623 ★	1122 636-68
		SN74ALS1623-1 ★	1122 636-69
74ALS163			
	Motorola	SN74ALS163 ★	823 608-54
	National	DM74ALS163	608-56
	TI	SN74ALS163 ★	978 608-58
74ALS1638			
	TI	SN74ALS1638 ★	1123 634-129
		SN74ALS1638-1 ★	1123 634-130
74ALS1639			
	TI	SN74ALS1639 ★	1123 634-131
		SN74ALS1639-1 ★	1123 634-132
74ALS164			
	Motorola	SN74ALS164 ★	823 632-34
	TI	SN74ALS164 ★	979 632-36
74ALS1640			
	TI	SN74ALS1640 ★	1124 635-1
		SN74ALS1640-1 ★	1124 635-2
74ALS1641			
	TI	SN74ALS1641 ★	1124 635-55
		SN74ALS1641-1 ★	1124 635-56
74ALS1642			
	TI	SN74ALS1642 ★	1124 634-145
		SN74ALS1642-1 ★	1124 634-146
74ALS1643			
	TI	SN74ALS1643 ★	1124 635-3
		SN74ALS1643-1 ★	1124 635-4
74ALS1644			
	TI	SN74ALS1644 ★	1124 635-140
		SN74ALS1644-1 ★	1124 635-141
74ALS1645			
	TI	SN74ALS1645 ★	1124 635-84
	TI	SN74ALS1645	2678-27
	TI	SN74ALS1645-1 ★	1124 635-85
74ALS165			
	TI	SN74ALS165 ★	979 632-87
74ALS166			
	TI	SN74ALS166 ★	979 632-107
74ALS168			
	Motorola	SN74ALS168 ★	823 610-186
	TI	SN74ALS168 ★	980 610-188
74ALS169			
	Motorola	SN74ALS169 ★	823 608-182
	TI	SN74ALS169 ★	980 608-184
74ALS16R4			
	TI	SN74ALS16R4-1	4480-54
74ALS174			
	Motorola	MC74ALS174	615-159
	TI	SN74ALS174 ★	983 615-161
74ALS175			
	TI	SN74ALS175 ★	983 615-49
74ALS190			
	Motorola	SN74ALS190 ★	823 611-82
	TI	SN74ALS190 ★	989 611-84
74ALS191			
	Motorola	SN74ALS191 ★	823 609-42
	TI	SN74ALS191 ★	989 609-50
74ALS192			
	Motorola	SN74ALS192 ★	823 611-46
	TI	SN74ALS192 ★	990 611-48
74ALS193			
	Motorola	SN74ALS193 ★	823 609-94
	TI	SN74ALS193 ★	990 609-96
74ALS194			
	TI	SN74ALS194 ★	990 631-161
74ALS20			
	Hitachi	HD74ALS20	620-49
	Motorola	SN74ALS20 ★	822 620-51
	TI	SN74ALS20 ★	926 620-55
74ALS21			
	Hitachi	HD74ALS21	618-120
	Motorola	SN74ALS21 ★	822 618-122
	TI	SN74ALS21 ★	927 618-124
74ALS22			
	Motorola	SN74ALS22 ★	822 620-7
	TI	SN74ALS22 ★	927 620-9
74ALS238			
	Motorola	SN74ALS238 ★	823 613-81
74ALS239			
	Motorola	SN74ALS239 ★	823 612-162
74ALS240			
	Motorola	SN74ALS240 ★	823 633-144
	National	DM74ALS240	633-147
	TI	SN74ALS240 ★	998 633-154
	TI	SN74ALS240	2670-12
74ALS241			
	Motorola	SN74ALS241 ★	823 634-15
	National	DM74ALS241	634-18
	TI	SN74ALS241 ★	999 634-25
	TI	SN74ALS241	2669-47
74ALS242			
	Motorola	SN74ALS242 ★	823 633-67
	National	DM74ALS242	633-71
	TI	SN74ALS242 ★	999 633-79
	TI	SN74ALS242	2675-62
74ALS243			
	Motorola	SN74ALS243 ★	823 633-68
	National	DM74ALS243	633-72
	TI	SN74ALS243 ★	1000 633-80
	TI	SN74ALS243	2675-63
74ALS244			
	Motorola	SN74ALS244 ★	823 634-73
	National	DM74ALS244	634-19
	TI	SN74ALS244 ★	1000 634-77
	TI	SN74ALS244	2669-48
74ALS245			
	Motorola	SN74ALS245 ★	823 635-72
	National	DM74ALS245	635-76
	TI	SN74ALS245 ★	1001 635-86
	TI	SN74ALS245	2678-28
74ALS251			
	Motorola	SN74ALS251 ★	823 630-37
	TI	SN74ALS251 ★	1003 630-39
74ALS253			
	Motorola	SN74ALS253 ★	823 627-166
	TI	SN74ALS253 ★	1003 627-168
74ALS257			
	Motorola	SN74ALS257 ★	823 628-164
	TI	SN74ALS257 ★	1004 628-166
74ALS258			
	Motorola	SN74ALS258 ★	823 628-89
	TI	SN74ALS258 ★	1005 628-91
74ALS259			
	TI	SN74ALS259 ★	1005 626-24
74ALS27			
	Motorola	SN74ALS27 ★	822 624-1
	TI	SN74ALS27 ★	929 624-3
74ALS273			
	Motorola	SN74ALS273 ★	823 616-66
	National	DM74ALS273	616-68
	TI	SN74ALS273 ★	1007 616-70
74ALS28			
	Motorola	SN74ALS28 ★	822 624-61
	TI	SN74ALS28 ★	929 624-69
74ALS299			
	TI	SN74ALS299 ★	1016 632-163
74ALS30			
	TI	SN74ALS30 ★	929 622-31
74ALS32			
	Motorola	SN74ALS32 ★	822 623-88
	National	DM74ALS32	623-90
	TI	SN74ALS32 ★	930 623-94
74ALS323			
	TI	SN74ALS323 ★	1018 632-164
74ALS33			
	Motorola	SN74ALS33 ★	822 624-26
	TI	SN74ALS33 ★	930 624-28
74ALS34			
	TI	SN74ALS34 ★	931 606-17
74ALS35			
	TI	SN74ALS35 ★	931 606-21
74ALS352			
	Motorola	SN74ALS352 ★	823 627-140
	TI	SN74ALS352 ★	1020 627-142
74ALS353			
	Motorola	SN74ALS353 ★	823 627-106
	TI	SN74ALS353 ★	1021 627-109
74ALS365			
	TI	SN74ALS365 ★	1023 606-44
74ALS366			
	TI	SN74ALS366 ★	1023 614-100
		SN74ALS366-1 ★	1023 614-101
74ALS367			
	TI	SN74ALS367 ★	1024 606-45
74ALS368			
	TI	SN74ALS368 ★	1024 607-2
74ALS37			
	Motorola	SN74ALS37 ★	823 621-50
	TI	SN74ALS37 ★	932 621-52
74ALS373			
	Motorola	SN74ALS373 ★	823 626-42
	National	DM74ALS373	626-46
	TI	SN74ALS373 ★	1025 626-50
74ALS374			
	Motorola	SN74ALS374 ★	823 616-93
	National	DM74ALS374	616-99
	TI	SN74ALS374 ★	1026 616-105
74ALS377			
	Motorola	SN74ALS377 ★	823 616-150
	National	DM74ALS377	616-152
74ALS38			
	Motorola	SN74ALS38 ★	823 620-196
	TI	SN74ALS38 ★	932 620-198
74ALS40			
	Motorola	SN74ALS40 ★	823 619-160
	TI	SN74ALS40 ★	933 619-162
74ALS465			
	TI	SN74ALS465 ★	1040 606-97
74ALS466			
	TI	SN74ALS466 ★	1040 607-110

Arranged alphanumerically from left to right.

© IC MASTER 1984

Base Number	Source	Device	Page-Line
74ALS467			
	TI	SN74ALS467 ★	1040
			606-98
74ALS468			
	TI	SN74ALS468 ★	1040
			607-111
74ALS51			
	Motorola	SN74ALS51 ★	823
			622-128
74ALS518			
	TI	SN74ALS518 ★	1044
			603-107
74ALS519			
	TI	SN74ALS519 ★	1044
			603-108
74ALS520			
	TI	SN74ALS520 ★	1044
			603-91
74ALS521			
	TI	SN74ALS521 ★	1044
			603-92
74ALS522			
	TI	SN74ALS522 ★	1044
			603-93
74ALS526			
	TI	SN74ALS526 ★	1045
			4482-54
	TI	SN74ALS526	603-152
			636-89
74ALS527			
	TI	SN74ALS527 ★	1045
			4482-56
	TI	SN74ALS527	603-103
74ALS528			
	TI	SN74ALS528 ★	1046
			4482-52
	TI	SN74ALS528	603-150
74ALS533			
	Motorola	SN74ALS533 ★	823
			626-105
	TI	SN74ALS533 ★	1047
			626-113
74ALS534			
	Motorola	SN74ALS534 ★	823
			616-36
	TI	SN74ALS534 ★	1047
			616-42
74ALS537			
	Motorola	SN74ALS537 ★	823
			612-109
74ALS538			
	Motorola	SN74ALS538 ★	823
			613-44
	TI	SN74ALS538 ★	1048
			613-48
74ALS539			
	Motorola	SN74ALS539 ★	823
			612-121
	TI	SN74ALS539 ★	1049
			612-123
74ALS54			
	Motorola	SN74ALS54	623-4
74ALS540			
	Motorola	SN74ALS540 ★	823
			633-145
	TI	SN74ALS540 ★	1050
			633-149
	TI	SN74ALS540	2670-13
74ALS541			
	Motorola	SN74ALS541 ★	823
			634-16
	TI	SN74ALS541 ★	1050
			634-26
	TI	SN74ALS541	2669-49
74ALS55			
	Motorola	MC74ALS55	622-169
	Motorola	SN74ALS55 ★	823
74ALS560			
	Motorola	SN74ALS560 ★	823
			610-155
	TI	SN74ALS560 ★	1051
			610-157
74ALS561			
	Motorola	SN74ALS561 ★	823
			608-150
	TI	SN74ALS561 ★	1051
			608-152
74ALS563			
	Motorola	SN74ALS563 ★	823
			626-106
	TI	SN74ALS563 ★	1052
			626-114
74ALS564			
	Motorola	SN74ALS564 ★	823
			616-37
	TI	SN74ALS564 ★	1052
			616-43
74ALS568			
	Motorola	SN74ALS568 ★	823
			610-176
	TI	SN74ALS568 ★	1053
			610-178
74ALS569			
	Motorola	MC74ALS569	609-71
	Motorola	SN74ALS569 ★	823
	TI	SN74ALS569 ★	1053
			609-73
74ALS573			
	Motorola	SN74ALS573 ★	823
			626-43
	National	DM74ALS573	626-47
	TI	SN74ALS573 ★	1054
			626-51
74ALS574			
	Motorola	SN74ALS574 ★	823
			616-94
	National	DM74ALS574	616-100
	TI	SN74ALS574 ★	1054
			616-106
74ALS575			
	Motorola	SN74ALS575 ★	823
			616-95
	TI	SN74ALS575 ★	1054
			616-107
74ALS576			
	Motorola	SN74ALS576 ★	823
			619-95
	National	DM74ALS576	619-99
	TI	SN74ALS576 ★	1055
			616-44
74ALS577			
	Motorola	SN74ALS577 ★	823
			616-96
	TI	SN74ALS577 ★	1055
			616-108
74ALS580			
	Motorola	SN74ALS580 ★	823
			626-107
	National	DM74ALS580	626-109
	TI	SN74ALS580 ★	1056
			626-115
74ALS620			
	Motorola	SN74ALS620 ★	823
			636-54
	National	DM74ALS620	636-59
	TI	SN74ALS620 ★	1066
			636-70
74ALS621			
	Motorola	SN74ALS621 ★	823
			636-29
	TI	SN74ALS621 ★	1066
			636-38
74ALS622			
	Motorola	SN74ALS622 ★	823
			636-27
	National	DM74ALS622	636-60
	TI	SN74ALS622 ★	1066
			636-39
74ALS623			
	Motorola	SN74ALS623 ★	823
			636-55
	National	DM74ALS623	636-61
	TI	SN74ALS623 ★	1066
			636-71
74ALS632			
	National	MM74ALS632	2665-39
	TI	SN74ALS632 ★	374
			★ 1070
			639-136
			¶ 264-8
			★ 374
			★ 1070
			2665-55
74ALS633			
	National	MM74ALS633	2665-40
	TI	SN74ALS633 ★	374
			★ 1070
			639-137
			¶ 264-8
			★ 374
			★ 1070
			2665-56
74ALS634			
	National	MM74ALS634	2665-41
	TI	SN74ALS634 ★	374
			★ 1071
			639-138
			¶ 264-8
			★ 374
			★ 1071
			2665-57
74ALS635			
	National	MM74ALS635	2665-42
	TI	SN74ALS635 ★	374
			★ 1071
			639-139
			¶ 264-8
			★ 374
			★ 1071
			2665-58
74ALS636			
	TI	SN74ALS636	639-3
74ALS637			
	TI	SN74ALS637	639-4
74ALS638			
	Motorola	SN74ALS638 ★	823
			634-123
	TI	SN74ALS638 ★	1073
			634-133
74ALS639			
	Motorola	SN74ALS639 ★	823
			634-124
	TI	SN74ALS639 ★	1073
			634-134
74ALS640			
	Motorola	SN74ALS640 ★	823
			634-160
	National	DM74ALS640	634-163
	TI	SN74ALS640 ★	1074
			635-5
74ALS641			
	Motorola	SN74ALS641 ★	823
			635-50
	National	DM74ALS641	635-52
	TI	SN74ALS641 ★	1074
			635-57
74ALS642			
	Motorola	SN74ALS642 ★	823
			634-140
	National	DM74ALS642	634-142
	TI	SN74ALS642 ★	1074
			634-147
74ALS643			
	Motorola	SN74ALS643 ★	823
			634-161
	National	DM74ALS643	634-164
	TI	SN74ALS643 ★	1074
			635-6
74ALS644			
	Motorola	SN74ALS644 ★	823
			635-135
	National	DM74ALS644	635-137
	TI	SN74ALS644 ★	1074
			635-142
74ALS645			
	TI	SN74ALS645 ★	1074
			635-87
	TI	SN74ALS645	2678-29
74ALS646			
	Motorola	SN74ALS646 ★	823
			636-115
	National	DM74ALS646	636-119
	TI	SN74ALS646 ★	1076
			635-190
		SN74ALS646-1 ★	1076
			636-1
74ALS647			
	Motorola	SN74ALS647 ★	823
			635-168
	National	DM74ALS647	635-172
			(Continued)
74ALS647			
	TI	SN74ALS647 ★	1076
			635-180
		SN74ALS647-1 ★	1076
			635-181
74ALS648			
	Motorola	SN74ALS648 ★	823
			636-116
	National	DM74ALS648	636-120
	TI	SN74ALS648 ★	1076
			636-2
		SN74ALS648-1 ★	1076
			636-3
74ALS649			
	Motorola	SN74ALS649 ★	823
			635-169
	National	DM74ALS649	635-173
	TI	SN74ALS649 ★	1076
			635-182
		SN74ALS649-1 ★	1076
			635-183
74ALS651			
	Motorola	SN74ALS651 ★	823
			635-73
	TI	SN74ALS651 ★	1078
			635-7
			636-4
		SN74ALS651-1 ★	1078
			636-5
74ALS652			
	Motorola	SN74ALS652 ★	823
			635-74
	TI	SN74ALS652 ★	1078
			635-8
			636-6
		SN74ALS652-1 ★	1078
			636-7
74ALS653			
	Motorola	MC74ALS653	635-153
	Motorola	SN74ALS653 ★	823
	TI	SN74ALS653 ★	1079
			635-155
		SN74ALS653-1 ★	1079
			635-156
74ALS654			
	Motorola	MC74ALS654	635-160
	Motorola	SN74ALS654 ★	823
	TI	SN74ALS654 ★	1079
			635-162
		SN74ALS654-1 ★	1079
			635-163
74ALS671			
	Motorola	SN74ALS671 ★	823
			631-24
74ALS672			
	Motorola	SN74ALS672 ★	823
			631-25
74ALS677			
	TI	SN74ALS677 ★	1083
			603-27
74ALS678			
	TI	SN74ALS678 ★	1083
			603-28
74ALS679			
	TI	SN74ALS679 ★	1084
			603-29
74ALS680			
	TI	SN74ALS680 ★	1084
			603-30
74ALS688			
	TI	SN74ALS688 ★	1088
			603-127
74ALS689			
	TI	SN74ALS689 ★	1088
			603-109
74ALS690			
	Motorola	SN74ALS690 ★	823
			610-84
	National	DM74ALS690	610-90
74ALS691			
	Motorola	SN74ALS691 ★	823
			607-166
	National	DM74ALS691	607-170
74ALS692			
	Motorola	SN74ALS692 ★	823
			610-85
	National	DM74ALS692	610-91

¶ Indicates page number in Application Note Directory.
★ Indicates addition data is provided on the page noted.

Base Number	Source	Device	Page-Line
74ALS693			
	Motorola	**SN74ALS693** ★	**823** 607-167
	National	DM74ALS693	607-171
74ALS694			
	Motorola	**SN74ALS694** ★	**823** 611-162
74ALS695			
	Motorola	**SN74ALS695** ★	**823** 611-163
74ALS696			
	Motorola	**SN74ALS696** ★	**823** 610-163
	National	DM74ALS696	610-167
74ALS697			
	Motorola	**SN74ALS697** ★	**823** 609-43
	National	DM74ALS697	609-47
74ALS698			
	Motorola	**SN74ALS698** ★	**823** 610-164
	National	DM74ALS698	610-168
74ALS699			
	Motorola	**SN74ALS699** ★	**823** 609-44
	National	DM74ALS699	609-48
74ALS74			
	Hitachi	HD74ALS74	614-163
	Motorola	**SN74ALS74** ★	**823** 614-165
	National	DM74ALS74	614-167
	TI	**SN74ALS74** ★	**945** 614-169
74ALS790			
	Motorola	**SN74ALS790** ★	**823** 637-3
	Motorola	SN74ALS790	2665-34
74ALS8003			
	TI	**SN74ALS8003** ★	**1128** 619-145
74ALS804			
	TI	**SN74ALS804** ★	**1094** 614-109
74ALS805			
	TI	**SN74ALS805** ★	**1095** 614-113
74ALS808			
	TI	**SN74ALS808** ★	**1095** 614-105
74ALS832			
	TI	**SN74ALS832** ★	**1098** 614-117 623-129
74ALS857			
	TI	**SN74ALS857** ★	**1102** 633-135
74ALS86			
	TI	**SN74ALS86** ★	**951** 624-170
74ALS873			
	Motorola	**SN74ALS873** ★	**823** 625-74
	National	DM74ALS873	625-76
	TI	**SN74ALS873** ★	**1106** 625-78
74ALS874			
	Motorola	**SN74ALS874** ★	**823** 614-126
	National	DM74ALS874	614-129
	TI	**SN74ALS874** ★	**1106** 614-135
74ALS876			
	Motorola	**SN74ALS876** ★	**823** 614-127
	National	DM74ALS876	614-130
	TI	**SN74ALS876** ★	**1107** 614-136
74ALS878			
	Motorola	MC74ALS878	614-122
	Motorola	**SN74ALS878** ★	**823**
	TI	**SN74ALS878** ★	**1108** 614-137
74ALS879			
	Motorola	MC74ALS879	614-123
	Motorola	**SN74ALS879** ★	**823**
	TI	**SN74ALS879** ★	**1108** 614-138
74ALS880			
	Motorola	**SN74ALS880** ★	**823** 625-156
	National	DM74ALS880	625-158
	TI	**SN74ALS880** ★	**1109** 625-160
74ALS91			
	Motorola	**SN74ALS91** ★	**823** 632-148
74AS00	**TI**	**SN74AS00** ★	**920** 621-173
74AS02	**TI**	**SN74AS02** ★	**920** 624-73
74AS04	**TI**	**SN74AS04** ★	**921** 607-67
74AS08	**TI**	**SN74AS08** ★	**922** 619-106
74AS10	**TI**	**SN74AS10** ★	**923** 620-143
74AS1000			
	TI	**SN74AS1000** ★	**1114** 621-174
74AS1002			
	TI	**SN74AS1002** ★	**1114** 624-74
74AS1004			
	TI	**SN74AS1004** ★	**1115** 607-68
74AS1008			
	TI	**SN74AS1008** ★	**1116** 619-107
74AS1032			
	TI	**SN74AS1032** ★	**1117** 623-97
74AS1034			
	TI	**SN74AS1034** ★	**1118** 606-15 606-47
74AS1036			
	TI	**SN74AS1036** ★	**1118** 614-17 624-75
74AS109			
	TI	**SN74AS109** ★	**958** 617-58
74AS11	**TI**	**SN74AS11** ★	**923** 619-7
74AS112			
	TI	**SN74AS112** ★	**959** 618-46
74AS113			
	TI	**SN74AS113** ★	**959** 618-7
74AS114			
	TI	**SN74AS114** ★	**960** 618-83
74AS1242			
	TI	SN74AS1242	633-85
74AS1243			
	TI	SN74AS1243	638-10
74AS131			
	TI	**SN74AS131** ★	**964** 613-104
74AS137			
	TI	**SN74AS137** ★	**967** 613-93
74AS138			
	TI	**SN74AS138** ★	**968** 613-50
74AS139			
	TI	**SN74AS139** ★	**968** 612-129
74AS150			
	TI	**SN74AS150** ★	**971** 630-87
74AS151			
	TI	**SN74AS151** ★	**972** 629-162
74AS153			
	TI	SN74AS153	628-45
74AS157			
	TI	**SN74AS157** ★	**975** 629-23
74AS158			
	TI	**SN74AS158** ★	**975** 628-132
74AS160			
	TI	**SN74AS160** ★	**977** 610-47
74AS161			
	TI	**SN74AS161** ★	**977** 608-15
74AS162			
	TI	**SN74AS162** ★	**978** 610-95
74AS163			
	TI	**SN74AS163** ★	**978** 608-60
74AS168			
	TI	**SN74AS168** ★	**980** 611-2
74AS169			
	TI	**SN74AS169** ★	**980** 608-186
74AS174			
	TI	**SN74AS174** ★	**983** 615-163
74AS175			
	TI	**SN74AS175** ★	**983** 615-51
74AS181			
	TI	**SN74AS181A** ★	**985** 604-29
74AS182			
	TI	**SN74AS182** ★	**986** 604-86
74AS194			
	TI	**SN74AS194** ★	**990** 631-163
74AS195			
	TI	**SN74AS195** ★	**991** 631-59
74AS20	**TI**	**SN74AS20** ★	**926** 620-57
74AS21	**TI**	**SN74AS21** ★	**927** 618-126
74AS230			
	TI	**SN74AS230** ★	**998** 634-80
74AS231			
	TI	**SN74AS231** ★	**998** 634-81
74AS240			
	TI	**SN74AS240** ★	**998** 633-155
	TI	SN74AS240	2670-14
74AS241			
	TI	**SN74AS241** ★	**999** 634-29
	TI	SN74AS241	2669-50
74AS242			
	TI	**SN74AS242** ★	**999** 633-86
74AS243			
	TI	**SN74AS243** ★	**1000** 633-87
74AS244			
	TI	**SN74AS244** ★	**1000** 634-82
74AS245			
	TI	**SN74AS245** ★	**1001** 635-90
	TI	SN74AS245	2678-30
74AS251			
	TI	**SN74AS251** ★	**1003** 630-41
74AS253			
	TI	**SN74AS253** ★	**1003** 627-170
74AS257			
	TI	**SN74AS257** ★	**1004**
74AS258			
	TI	**SN74AS258** ★	**1005** 628-93
74AS2620			
	TI	**SN74AS2620** ★	**1126** 635-41
74AS2623			
	TI	**SN74AS2623** ★	**1126** 635-47
74AS264			
	TI	**SN74AS264** ★	**1006** 604-87
74AS2640			
	TI	**SN74AS2640** ★	**1127** 635-42
74AS2643			
	TI	SN74AS2643	635-44
74AS2645			
	TI	**SN74AS2645** ★	**1127** 635-48
74AS27	**TI**	**SN74AS27** ★	**929** 624-5
74AS280			
	TI	**SN74AS280** ★	**1009** 639-82
74AS282			
	TI	**SN74AS282** ★	**1010** 604-88
74AS286			
	TI	**SN74AS286** ★	**1012** 639-111
74AS298			
	TI	**SN74AS298** ★	**1015** 629-69
74AS299			
	TI	**SN74AS299** ★	**1016** 632-167
74AS30	**TI**	**SN74AS30** ★	**929** 622-33
74AS32	**TI**	**SN74AS32** ★	**930** 623-98
74AS323			
	TI	**SN74AS323** ★	**1018** 632-168
74AS34	**TI**	**SN74AS34** ★	**931** 606-19
74AS352			
	TI	**SN74AS352** ★	**1020** 627-144
74AS353			
	TI	**SN74AS353** ★	**1021** 627-110
74AS373			
	TI	**SN74AS373** ★	**1025** 626-54
74AS374			
	TI	**SN74AS374** ★	**1026** 616-113
74AS395			
	TI	**SN74AS395** ★	**1031** 631-130
74AS533			
	TI	**SN74AS533** ★	**1047** 626-118
74AS534			
	TI	**SN74AS534** ★	**1047** 616-45
74AS573			
	TI	**SN74AS573** ★	**1054** 626-55
74AS574			
	TI	**SN74AS574** ★	**1054** 616-114
74AS575			
	TI	**SN74AS575** ★	**1054** 616-115
74AS576			
	TI	**SN74AS576** ★	**1055** 616-47
74AS577			
	TI	**SN74AS577** ★	**1055** 616-116
74AS580			
	TI	**SN74AS580** ★	**1056** 626-119
74AS620			
	TI	**SN74AS620** ★	**1066** 636-74
74AS621			
	TI	**SN74AS621** ★	**1066** 636-42
74AS622			
	TI	**SN74AS622** ★	**1066** 636-43
74AS623			
	TI	**SN74AS623** ★	**1066** 636-75
74AS638			
	TI	**SN74AS638** ★	**1073** 634-137

Arranged alphanumerically from left to right.

© IC MASTER 1984

Base Number	Source	Device	Page-Line
74AS639			
	TI	SN74AS639	★1073
			634-138
74AS640			
	TI	SN74AS640	★1074
			635-13
74AS641			
	TI	SN74AS641	★1074
			635-59
74AS642			
	TI	SN74AS642	★1074
			634-149
74AS643			
	TI	SN74AS643	★1074
			635-14
74AS644			
	TI	SN74AS644	★1074
			635-144
74AS645			
	TI	SN74AS645	★1074
			635-91
74AS646			
	TI	SN74AS646	★1076
			636-10
74AS648			
	TI	SN74AS648	★1076
			636-11
74AS651			
	TI	SN74AS651	★1078
			635-15
74AS652			
	TI	SN74AS652	★1078
			635-16
74AS74	TI	SN74AS74	★ 945
			614-171
74AS756			
	TI	SN74AS756	★1091
			633-139
74AS757			
	TI	SN74AS757	★1091
			634-12
74AS758			
	TI	SN74AS758	★1092
			633-63
74AS759			
	TI	SN74AS759	★1092
			633-64
74AS760			
	TI	SN74AS760	★1092
			634-113
74AS762			
	TI	SN74AS762	★1093
			634-114
74AS763			
	TI	SN74AS763	★1093
			634-110
74AS800			
	TI	SN74AS800	★1093
			613-143
74AS802			
	TI	SN74AS802	★1094
			613-145
74AS804			
	TI	SN74AS804	622-18
	TI	SN74AS804A	★1094
			614-111
74AS805			
	TI	SN74AS805	624-119
	TI	SN74AS805A	★1095
			614-115
74AS808			
	TI	SN74AS808	619-143
	TI	SN74AS808A	★1095
			614-107
74AS821			
	TI	SN74AS821	★1096
			616-181
74AS822			
	TI	SN74AS822	★1096
			616-179
74AS823			
	TI	SN74AS823	★1096
			616-177
74AS824			
	TI	SN74AS824	★1097
			616-175
74AS825			
	TI	SN74AS825	★1097
			616-173
74AS826			
	TI	SN74AS826	★1097
			616-171
74AS832			
	TI	SN74AS832	623-131
	TI	SN74AS832A	★1098
			614-119
74AS841			
	TI	SN74AS841	★1098
			626-153
74AS842			
	TI	SN74AS842	★1098
			626-151
74AS843			
	TI	SN74AS843	★1099
			626-147
74AS844			
	TI	SN74AS844	★1099
			626-145
74AS845			
	TI	SN74AS845	★1099
			626-139
74AS846			
	TI	SN74AS846	★1100
			626-101
74AS850			
	TI	SN74AS850	★1100
			630-72
74AS851			
	TI	SN74AS851	★1100
			630-73
74AS852			
	TI	SN74AS852	★1101
			636-100
74AS856			
	TI	SN74AS856	★1101
			636-101
74AS857			
	TI	SN74AS857	★1102
			633-137
74AS866			
	TI	SN74AS866	★1103
			605-127
74AS867			
	TI	SN74AS867	★1103
			608-172
74AS869			
	TI	SN74AS869	★1103
			608-173
74AS870			
	TI	SN74AS870	★1104
			626-163
74AS871			
	TI	SN74AS871	★1105
			626-164
74AS873			
	TI	SN74AS873	★1106
			625-80
74AS874			
	TI	SN74AS874	★1106
			614-143
74AS876			
	TI	SN74AS876	★1107
			614-144
74AS877			
	TI	SN74AS877	★1107
			639-26
74AS878			
	TI	SN74AS878	★1108
			614-145
74AS879			
	TI	SN74AS879	★1108
			614-146
74AS880			
	TI	SN74AS880	★1109
			625-162
74AS881			
	TI	SN74AS881A	★1109
			604-30
74AS882			
	TI	SN74AS882	★1110
			604-89
74AS885			
	TI	SN74AS885	★1110
			603-129
74AS888			
	TI	SN74AS888	★1111
			★1129
			1337-75
74AS889			
	TI	SN74AS889	★1111
			★1129
			1337-76
74AS890			
	TI	SN74AS890	★1112
			★1142
			1337-79
74AS891			
	TI	SN74AS891	★1112
			★1142
74AS894			
	TI	SN74AS894	605-46
74AS897			
	TI	SN74AS897	★1113
			603-22
74AS95	TI	SN74AS95	★ 954
			631-96
74C00	National	MM74C00	583-86
			¶ 251-12
74C02	National	MM74C02	585-45
			¶ 251-12
74C04	National	MM74C04	574-2
			¶ 251-12
74C08	National	MM74C08	582-130
74C10	National	MM74C10	583-31
74C107	National	MM74C107	581-176
74C14	National	MM74C14	593-135
			¶ 259-8
74C150	National	MM74C150	589-65
74C151	National	MM74C151	588-169
74C154	National	MM74C154	579-78
74C157	National	MM74C157	588-86
74C160	National	MM74C160	576-107
74C161	National	MM74C161	574-90
74C162	National	MM74C162	576-67
74C163	National	MM74C163	574-55
74C164	National	MM74C164	591-102
			3790-108
74C165	National	MM74C165	591-74
			3790-76
74C173	National	MM74C173	580-101
74C174	National	MM74C174	580-165
74C175	National	MM74C175	580-137
74C192	National	MM74C192	576-149
74C193	National	MM74C193	574-138
74C195	National	MM74C195	590-135
			3789-51
74C20	National	MM74C20	582-183
74C200	National	MM74C200	587-151
			3772-60
74C221	National	MM74C221	589-135
			¶ 259-11
74C240	National	MM74C240	594-17
74C244	National	MM74C244	593-171
74C30	National	MM74C30	583-138
74C32	National	MM74C32	584-90
74C374	National	MM74C374	581-89
74C42	National	MM74C42	578-38
74C48	National	MM74C48	578-73
74C73	National	MM74C73	581-177
74C74	National	MM74C74	580-54
74C76	National	MM74C76	582-24
74C83	National	MM74C83	571-43
74C85	National	MM74C85	571-113
74C86	National	MM74C86	585-129
74C89	National	MM74C89	587-132
			3771-46
74C90	National	MM74C90	576-93
74C901	National	MM74C901	572-172
			¶ 290-1
74C902	National	MM74C902	572-174
			¶ 290-1
74C903	National	MM74C903	572-168
			¶ 290-1
74C904	National	MM74C904	572-170
			¶ 290-1
74C905	National	MM74C905	592-133
74C906	National	MM74C906	572-164
74C907	National	MM74C907	572-166
74C908	National	MM74C908	580-30
			¶ 252-3
74C909	National	MM74C909	592-57
			3163-3
74C910	National	MM74C910	587-169
			¶ 322-5
74C911	National	MM74C911	580-36
			2663-3
74C912	National	MM74C912	580-37
			2663-63
74C914	National	MM74C914	593-136
74C915	National	MM74C915	580-40
			2663-83
74C917	National	MM74C917	580-38
			2663-64
74C918	National	MM74C918	580-31
			¶ 252-3
74C920	National	MM74C920	588-32
			¶ 320-6
74C921	National	MM74C921	588-33
			¶ 320-6
74C922	National	MM74C922	2667-2
			¶ 254-6
74C923	National	MM74C923	2667-7
74C925	National	MM74C925	577-96
74C926	National	MM74C926	577-97
74C927	National	MM74C927	577-79
74C928	National	MM74C928	577-78
74C929	National	MM74C929	588-12
			¶ 320-6
74C93	National	MM74C93	574-40
74C930	National	MM74C930	588-13
			¶ 320-6
74C932	National	MM74C932	592-58
74C941	National	MM74C941	573-141
			2669-35
74C945	National	MM74C945	577-80
74C946	National	MM74C946	577-75
74C947	National	MM74C947	577-81
74C95	National	MM74C95	590-104
			3789-56
74C956	National	MM74C956	579-168
			2663-4
			1353-45
74F00	Fairchild	74F00	621-176
	Motorola	MC74F00	★ 822
			621-178
	Signetics	74F00	★ 879
			621-180
74F02	Fairchild	74F02	624-77
	Motorola	MC74F02	★ 822
			624-79
	Signetics	74F02	★ 879
			624-80
74F04	Fairchild	74F04	607-70
	Motorola	MC74F04	★ 822
			607-72
	Signetics	74F04	★ 879
			607-74
74F08	Fairchild	74F08	619-109
	Motorola	MC74F08	★ 822
			619-111
	Signetics	74F08	★ 879
			619-112
74F10	Fairchild	74F10	620-145
	Motorola	MC74F10	★ 822
			620-146
	Signetics	74F10	★ 879
			620-147
74F109	Fairchild	74F109	617-60
	Motorola	MC74F109	★ 822
			617-62
	Signetics	74F109	★ 879
			617-63
74F11	Fairchild	74F11	619-9
	Motorola	MC74F11	★ 822
			619-11
	Signetics	74F11	★ 879
			619-12
74F112	Fairchild	74F112	618-48
	Motorola	MC74F112	★ 822
			618-50
	Signetics	74F112	★ 879
			618-51
74F113	Fairchild	74F113	618-9
	Motorola	MC74F113	★ 822
			618-11
			(Continued)

¶ Indicates page number in Application Note Directory.
★ Indicates addition data is provided on the page noted.

Base Number	Source	Device	Page-Line
74F113	**Signetics**	**74F113**	★ **879**
			618-12
74F114	Fairchild	74F114	618-85
	Motorola	**MC74F114**	★ **822**
			618-87
	Signetics	**74F114**	★ **879**
			618-88
74F13	**Signetics**	**74F13**	★ **879**
			637-140
74F132	**Signetics**	**74F132**	★ **879**
			638-29
74F138	Fairchild	74F138	613-52
	Motorola	**MC74F138**	★ **822**
			613-54
	Signetics	**74F138**	★ **879**
			613-55
74F139	Fairchild	74F139	612-131
	Motorola	**MC74F139**	★ **822**
			612-133
	Signetics	**74F139**	★ **879**
			612-135
74F14	**Signetics**	**74F14**	★ **879**
			638-64
74F148	Fairchild	74F148	639-43
	Signetics	**74F148**	★ **879**
			639-44
74F151	Fairchild	74F151	629-164
	Motorola	**MC74F151**	★ **822**
			629-166
	Signetics	**74F151**	★ **879**
			629-167
74F153	Fairchild	74F153	628-47
	Motorola	**MC74F153**	★ **822**
			628-49
	Signetics	**74F153**	★ **879**
			628-50
74F157	Fairchild	74F157	629-25
	Motorola	**MC74F157**	★ **822**
			629-27
	Signetics	**74F157**	★ **879**
			629-29
74F158	Fairchild	74F158	628-134
	Motorola	**MC74F158**	★ **822**
			628-136
	Signetics	**74F158**	★ **879**
			628-138
74F160	**Fairchild**	**74F160A**	★ **710**
			610-49
	Motorola	**MC74F160**	★ **822**
			610-51
	Signetics	**74F160**	★ **879**
			610-52
74F161	**Fairchild**	**74F161A**	★ **714**
			608-17
	Motorola	**MC74F161**	★ **822**
			608-19
	Signetics	**74F161**	★ **879**
			608-20
74F162	**Fairchild**	**74F162A**	★ **710**
			610-97
	Motorola	**MC74F162**	★ **822**
			610-99
	Signetics	**74F162**	★ **879**
			610-100
74F163	**Fairchild**	**74F163A**	★ **714**
			608-62
	Motorola	**MC74F163**	★ **822**
			608-64
	Signetics	**74F163**	★ **879**
			608-65
74F164	Fairchild	74F164	632-38
	Signetics	**74F164**	★ **879**
			632-39
74F168	**Motorola**	**MC74F168**	★ **822**
			611-4
	Signetics	**74F168**	★ **879**
			611-5
74F169	Fairchild	74F169	609-2
	Motorola	**MC74F169**	★ **822**
			609-5
	Signetics	**74F169**	★ **879**
			609-6
74F174	Fairchild	74F174	615-164
	Motorola	**MC74F174**	★ **822**
			615-166
			(Continued)

Base Number	Source	Device	Page-Line
74F174	**Signetics**	**74F174**	★ **879**
			615-167
74F175	Fairchild	74F175	615-53
	Motorola	**MC74F175**	★ **822**
			615-55
	Signetics	**74F175**	★ **879**
			615-56
74F181	**Fairchild**	**74F181**	★ **718**
			604-34
	Motorola	**MC74F181**	★ **822**
			604-40
	Signetics	**74F181**	★ **879**
			604-44
74F182	Fairchild	74F182	604-91
	Motorola	**MC74F182**	★ **822**
			604-93
	Signetics	**74F182**	★ **879**
			604-94
74F189	Fairchild	74F189	627-71
	Motorola	**MC74F189**	★ **822**
			627-74
74F190	**Fairchild**	**74F190**	★ **722**
			611-86
	Motorola	**MC74F190**	★ **822**
			611-88
	Signetics	**74F190**	★ **879**
			611-89
74F191	**Fairchild**	**74F191**	★ **722**
			609-52
	Motorola	**MC74F191**	★ **822**
			609-54
	Signetics	**74F191**	★ **879**
			609-55
74F192	**Fairchild**	**74F192**	★ **726**
			611-50
	Motorola	**MC74F192**	★ **822**
			611-52
	Signetics	**74F192**	★ **879**
			611-53
74F193	**Fairchild**	**74F193**	★ **726**
			609-98
	Motorola	**MC74F193**	★ **822**
			609-100
	Signetics	**74F193**	★ **879**
			609-101
74F194	Fairchild	74F194	631-165
	Motorola	**MC74F194**	★ **822**
			631-167
	Signetics	**74F194**	★ **879**
			631-168
74F195	**Motorola**	**MC74F195**	★ **822**
			616-169
	Signetics	**74F195**	★ **879**
			631-60
74F198	**Signetics**	**74F198**	★ **879**
			632-63
74F20	Fairchild	74F20	620-59
	Motorola	**MC74F20**	★ **822**
			620-61
	Signetics	**74F20**	★ **879**
			620-63
74F211	Fairchild	74F211	627-91
74F212	Fairchild	74F212	627-92
74F213	Fairchild	74F213	627-96
74F219	Fairchild	74F219	627-72
74F240	**Fairchild**	**74F240**	★ **729**
			633-157
	Fairchild	74F240	2669-58
	Motorola	**MC74F240**	★ **822**
			633-159
	Signetics	**74F240**	★ **879**
			★ **881**
			633-161
74F241	**Fairchild**	**74F241**	★ **729**
			634-31
	Motorola	**MC74F241**	★ **822**
			634-33
	Signetics	**74F241**	★ **879**
			★ **881**
			634-35
74F242	Fairchild	74F242	633-90
	Motorola	**MC74F242**	★ **822**
			633-94
	Signetics	**74F242**	★ **879**
			633-98

Base Number	Source	Device	Page-Line
74F243	Fairchild	74F243	633-91
	Motorola	**MC74F243**	★ **822**
			633-95
	Signetics	**74F243**	★ **879**
			633-99
74F244	**Fairchild**	**74F244**	★ **729**
			634-84
	Motorola	**MC74F244**	★ **822**
			634-86
	Signetics	**74F244**	★ **879**
			★ **882**
			634-88
74F245	Fairchild	74F245	635-94
	Motorola	**MC74F245**	★ **822**
			635-99
	Signetics	**74F245**	★ **879**
			★ **883**
			635-103
74F251	Fairchild	74F251	630-43
	Motorola	**MC74F251**	★ **822**
			630-45
	Signetics	**74F251**	★ **879**
			630-46
74F253	Fairchild	74F253	627-172
	Motorola	**MC74F253**	★ **822**
			628-1
	Signetics	**74F253**	★ **879**
			628-2
74F256	**Signetics**	**74F256**	★ **879**
74F257	Fairchild	74F257	628-168
	Motorola	**MC74F257**	★ **822**
			628-170
	Signetics	**74F257**	★ **879**
			628-172
74F258	Fairchild	74F258	628-95
	Motorola	**MC74F258**	★ **822**
			628-97
	Signetics	**74F258**	★ **879**
			628-99
74F259	**Signetics**	**74F259**	★ **879**
			626-25
74F269	Fairchild	74F269	609-3
	Signetics	**74F269**	★ **879**
			609-7
74F273	**Signetics**	**74F273**	★ **879**
			616-71
74F280	Fairchild	74F280	639-84
	Motorola	**MC74F280**	★ **822**
			639-86
	Signetics	74F280	639-88
	Signetics	**74F280A**	★ **879**
			★ **884**
			639-89
74F283	Fairchild	74F283	605-86
	Motorola	**MC74F283**	★ **822**
			605-88
	Signetics	**74F283**	★ **879**
			605-89
74F289	Fairchild	74F289	627-50
	Motorola	**MC74F289**	★ **822**
			627-53
74F2960			
	Motorola	**MC74F2960**	★ **822**
			635-100
	Motorola	MC74F2960	2665-33
			1336-90
			1352-3
74F2961			
	Motorola	**MC74F2961**	★ **822**
			1336-99
74F2962			
	Motorola	**MC74F2962**	★ **822**
			1336-100
74F2968			
	Motorola	**MC74F2968**	★ **822**
			2680-98
	Motorola	MC74F2968	1336-86
74F2969			
	Motorola	**MC74F2969**	★ **822**
			2680-88
	Motorola	MC74F2969	1336-107
74F2970			
	Motorola	**MC74F2970**	★ **822**
			2680-90
	Motorola	MC74F2970	1336-110

Base Number	Source	Device	Page-Line
74F298	**Signetics**	**74F298**	★ **879**
			629-74
74F299	**Fairchild**	**74F299**	★ **731**
			632-171
	Motorola	**MC74F299**	★ **822**
			632-175
	Signetics	**74F299**	★ **879**
			632-177
74F311	Fairchild	74F311	627-87
74F312	Fairchild	74F312	627-88
74F313	Fairchild	74F313	627-94
74F319	Fairchild	74F319	627-51
74F32	Fairchild	74F32	623-100
	Motorola	**MC74F32**	★ **822**
			623-102
	Signetics	**74F32**	★ **879**
			623-103
74F322	Fairchild	74F322	632-122
	Signetics	**74F322**	★ **879**
			632-123
74F323	Fairchild	74F323	632-172
	Motorola	**MC74F323**	★ **822**
			632-176
	Signetics	**74F323**	★ **879**
			632-178
74F35	Signetics	74F35	621-1
74F350	Fairchild	74F350	629-120
			629-124
	Motorola	**MC74F350**	★ **822**
			629-122
			638-138
	Signetics	**74F350**	★ **879**
			638-139
74F352	Fairchild	74F352	627-146
	Motorola	**MC74F352**	★ **822**
			627-148
	Signetics	**74F352**	★ **879**
			627-149
74F353	Fairchild	74F353	627-112
	Motorola	**MC74F353**	★ **822**
			627-114
	Signetics	**74F353**	★ **879**
			627-115
74F365	**Signetics**	**74F365**	★ **879**
			★ **885**
			606-50
74F366	**Signetics**	**74F366**	★ **879**
			★ **885**
			607-4
			614-102
74F367	**Signetics**	**74F367**	★ **879**
			★ **885**
			606-51
74F368	**Signetics**	**74F368**	★ **879**
			★ **885**
			607-5
74F37	**Signetics**	**74F37**	★ **879**
			621-53
74F373	**Fairchild**	**74F373**	★ **734**
			626-59
	Motorola	**MC74F373**	★ **822**
			626-63
	Signetics	**74F373**	★ **879**
			★ **886**
			626-65
74F374	**Fairchild**	**74F374**	★ **736**
			616-118
	Motorola	**MC74F374**	★ **822**
			616-120
	Signetics	**74F374**	★ **879**
			★ **886**
			616-122
74F377	**Signetics**	**74F377**	★ **879**
			616-153
74F378	Fairchild	74F378	616-2
	Motorola	**MC74F378**	★ **822**
			616-4
	Signetics	**74F378**	★ **879**
			616-5
74F379	Fairchild	74F379	615-97
	Motorola	**MC74F379**	★ **822**
			615-99
	Signetics	**74F379**	★ **879**
			615-100
74F38	**Signetics**	**74F38**	★ **879**
			621-2

Arranged alphanumerically from left to right.

© IC MASTER 1984

Base Number	Source	Device	Page-Line
74F381	Fairchild	74F381	604-35
	Motorola	**MC74F381**	★ **822**
			604-41
74F382	Fairchild	74F382	604-36
	Motorola	**MC74F382**	★ **822**
			604-42
74F384	Fairchild	74F384	605-12
74F385	Fairchild	74F385	603-7
74F395	**Signetics**	**74F395**	★ **879**
			631-131
74F398	Fairchild	74F398	629-72
	Signetics	**74F398**	★ **879**
			629-75
74F399	Fairchild	74F399	629-73
	Signetics	**74F399**	★ **879**
			629-76
74F40	**Signetics**	**74F40**	★ **879**
			619-163
74F401	Fairchild	74F401	2665-8
74F402	**Fairchild**	**74F402**	★ **738**
			2665-13
74F403	**Fairchild**	**74F403**	★ **743**
			637-11
	Fairchild	74F403	3757-4
74F412	Fairchild	74F412	626-60
74F413	**Fairchild**	**74F413**	★ **750**
			637-13
	Fairchild	74F413	3757-48
74F416	Fairchild	74F416	2665-28
74F418	**Fairchild**	**74F418**	★ **757**
			2665-29
			2666-2
74F430	Fairchild	74F430	2665-65
74F432	Fairchild	74F432	626-61
74F433	**Fairchild**	**74F433**	★ **743**
			637-15
	Fairchild	74F433	3757-49
74F492	Fairchild	74F492	2665-14
74F500	**Fairchild**	**74F500**	★ **762**
			2625-7
74F510	Fairchild	74F510	638-145
74F521	Fairchild	74F521	603-95
	Motorola	**MC74F521**	★ **822**
			603-97
	Signetics	**74F521**	★ **879**
			603-99
74F524	Fairchild	74F524	603-32
	Signetics	**74F524**	★ **879**
			603-33
74F525	Fairchild	74F525	639-134
74F526	Fairchild	74F526	636-91
74F533	Fairchild	74F533	626-121
	Motorola	**MC74F533**	★ **822**
			626-123
	Signetics	**74F533**	★ **879**
			626-125
74F534	Fairchild	74F534	616-49
	Motorola	**MC74F534**	★ **822**
			616-51
	Signetics	**74F534**	★ **879**
			616-53
74F537	Fairchild	74F537	612-111
	Motorola	**MC74F537**	★ **822**
			612-113
74F538	Fairchild	74F538	613-85
	Motorola	**MC74F538**	★ **822**
			613-87
74F539	Fairchild	74F539	613-5
	Motorola	**MC74F539**	★ **822**
			613-7
74F543	Fairchild	74F543	636-16
74F544	Fairchild	74F544	636-17
74F545	Fairchild	74F545	635-95
	Signetics	**74F545**	★ **879**
			635-104
74F547	Fairchild	74F547	613-37
74F548	Fairchild	74F548	613-38
74F550	Fairchild	74F550	636-18
74F551	Fairchild	74F551	636-19
74F557	Fairchild	74F557	605-22
74F558	Fairchild	74F558	605-2
74F559	Fairchild	74F559	604-109
74F568	Fairchild	74F568	610-180
	Signetics	**74F568**	★ **879**
			610-181

Base Number	Source	Device	Page-Line
74F569	Fairchild	74F569	608-177
	Signetics	**74F569**	★ **879**
			610-182
74F570	Fairchild	74F570	627-47
74F571	Fairchild	74F571	627-45
74F579	Fairchild	74F579	608-178
	Signetics	**74F579**	★ **879**
			610-183
74F582	Fairchild	74F582	605-48
74F583	Fairchild	74F583	603-165
74F588	Fairchild	74F588	637-23
	Signetics	**74F588**	★ **880**
			634-120
74F595	**Signetics**	**74F595**	★ **880**
			632-125
74F596	**Signetics**	**74F596**	★ **880**
			632-126
74F597	**Signetics**	**74F597**	★ **880**
			632-115
74F598	**Signetics**	**74F598**	★ **880**
			632-116
74F604	Fairchild	74F604	625-167
	Signetics	**74F604**	★ **880**
			★ **887**
			625-173
74F605	Fairchild	74F605	625-168
	Signetics	**74F605**	★ **880**
			★ **887**
			625-174
74F606	Fairchild	74F606	625-169
74F607	Fairchild	74F607	625-170
74F610	Fairchild	74F610	637-29
74F611	Fairchild	74F611	637-30
74F612	Fairchild	74F612	637-31
74F613	Fairchild	74F613	637-32
74F620	**Motorola**	**MC74F620**	★ **822**
			636-78
	Signetics	**74F620**	★ **880**
			636-80
74F621	Motorola	MC74F621	636-45
	Signetics	**74F621**	★ **880**
			636-46
74F622	**Signetics**	**74F622**	★ **880**
			636-47
74F623	**Motorola**	**MC74F623**	★ **822**
			636-79
	Signetics	**74F623**	★ **880**
			636-81
74F630	Fairchild	74F630	2665-30
	Signetics	**74F630**	★ **880**
			★ **888**
			2665-45
74F631	Fairchild	74F631	2665-31
	Signetics	**74F631**	★ **880**
			★ **888**
			2665-46
74F64	Fairchild	74F64	623-54
	Motorola	**MC74F64**	★ **822**
			623-56
	Signetics	**74F64**	★ **879**
			623-58
74F640	**Motorola**	**MC74F640**	★ **822**
			635-19
74F643	**Motorola**	**MC74F643**	★ **822**
			635-20
74F645	Motorola	MC74F645	635-101
74F646	**Signetics**	**74F646**	★ **880**
			★ **889**
			636-22
74F647	**Signetics**	**74F647**	★ **880**
			★ **889**
			635-176
74F648	**Signetics**	**74F648**	★ **880**
			★ **889**
			636-23
74F649	**Signetics**	**74F649**	★ **880**
			★ **889**
			635-177
74F655	**Signetics**	**74F655**	★ **880**
			★ **890**
			607-107
74F656	**Signetics**	**74F656**	★ **880**
			★ **890**
			606-94
74F657	**Signetics**	**74F657**	★ **880**
			635-151

Base Number	Source	Device	Page-Line
74F673	Fairchild	74F673	633-55
			3791-25
	Signetics	**74F673**	★ **880**
			633-56
	Signetics	74F673	3791-29
74F674	Fairchild	74F674	633-42
			3791-26
	Signetics	**74F674**	★ **880**
			633-43
	Signetics	74F674	3791-30
74F675	Fairchild	74F675	633-52
			3791-27
	Signetics	**74F675**	★ **880**
			633-53
	Signetics	74F675	3791-31
74F676	**Fairchild**	**74F676**	★ **763**
			633-49
	Fairchild	74F676	3791-28
	Signetics	**74F676**	★ **880**
			633-50
	Signetics	74F676	3791-32
74F74	Fairchild	74F74	614-173
	Motorola	**MC74F74**	★ **822**
			615-1
	Signetics	**74F74**	★ **879**
			615-2
74F779	Fairchild	74F779	608-179
	Signetics	**74F779**	★ **880**
			608-180
74F784	Fairchild	74F784	605-26
74F85	**Signetics**	**74F85**	★ **879**
			603-72
74F86	Fairchild	74F86	624-172
	Motorola	**MC74F86**	★ **822**
			624-174
	Signetics	**74F86**	★ **879**
			624-176
74H00	Fairchild	74H00	621-182
	National	DM74H00	621-186
	TI	**SN74H00**	★ **920**
			621-188
74H01	Fairchild	74H01	621-111
	National	DM74H01	621-113
	TI	**SN74H01**	★ **920**
			621-115
74H04	Fairchild	74H04	607-76
	National	DM74H04	607-78
	TI	**SN74H04**	★ **921**
			607-80
74H05	Fairchild	74H05	606-137
	National	DM74H05	606-139
	TI	**SN74H05**	★ **921**
			606-141
74H08	Fairchild	74H08	619-114
	National	DM74H08	619-118
74H09	Fairchild	74H09	619-58
74H10	Fairchild	74H10	620-149
	National	DM74H10	620-151
	TI	**SN74H10**	★ **923**
			620-153
74H101	Fairchild	74H101	617-37
	TI	**SN74H101**	★ **956**
			617-39
74H102	**TI**	**SN74H102**	★ **956**
			617-35
74H103	Fairchild	74H103	618-38
	National	DM74H103	618-40
	TI	**SN74H103**	★ **956**
			618-42
74H106	Fairchild	74H106	618-53
	National	DM74H106	618-55
	TI	**SN74H106**	★ **957**
			618-57
74H108	Fairchild	74H108	617-184
	National	DM74H108	617-186
	TI	**SN74H108**	★ **958**
			618-2
74H11	Fairchild	74H11	619-14
	National	DM74H11	619-16
	TI	**SN74H11**	★ **923**
			619-18
74H15	**TI**	**SN74H15**	★ **925**
			618-153
74H183	Fairchild	74H183	603-171
	Hitachi	HD74H183	603-172
	TI	**SN74H183**	★ **986**
			(Continued)

Base Number	Source	Device	Page-Line
74H183	**TI**	**SN74H183**	**603-174**
			¶ 323-19
74H20	Fairchild	74H20	620-65
	National	DM74H20	620-67
	TI	**SN74H20**	★ **926**
			620-69
74H21	Fairchild	74H21	618-128
	National	DM74H21	618-130
	TI	**SN74H21**	★ **927**
			618-132
74H22	Fairchild	74H22	620-11
	National	DM74H22	620-13
	TI	**SN74H22**	★ **927**
			620-15
74H30	Fairchild	74H30	622-35
	National	DM74H30	622-37
	TI	**SN74H30**	★ **929**
			622-39
74H40	Fairchild	74H40	619-165
	National	DM74H40	619-168
	TI	**SN74H40**	★ **933**
			619-170
74H50	Fairchild	74H50	622-109
	National	DM74H50	622-111
	TI	**SN74H50**	★ **936**
			622-113
74H51	Fairchild	74H51	622-130
	National	DM74H51	622-132
	TI	**SN74H51**	★ **936**
			622-134
74H52	Fairchild	74H52	622-90
	National	DM74H52	622-92
	TI	**SN74H52**	★ **937**
			622-94
74H53	Fairchild	74H53	623-13
	National	DM74H53	623-15
	TI	**SN74H53**	★ **937**
			623-17
74H54	Fairchild	74H54	623-6
	National	DM74H54	623-8
	TI	**SN74H54**	★ **938**
			623-10
74H55	Fairchild	74H55	622-184
	National	DM74H55	622-186
	TI	**SN74H55**	★ **939**
			623-2
74H60	National	DM74H60	637-163
	TI	**SN74H60**	★ **940**
			637-165
74H61	Fairchild	74H61	638-3
	National	DM74H61	638-5
	TI	**SN74H61**	★ **940**
			638-7
74H62	Fairchild	74H62	638-84
	National	DM74H62	638-86
	TI	**SN74H62**	★ **941**
			638-88
74H71	National	DM74H71	617-29
	TI	**SN74H71**	★ **943**
			617-31
74H72	Fairchild	74H72	617-16
	National	DM74H72	617-18
	TI	**SN74H72**	★ **944**
			617-21
74H73	Fairchild	74H73	617-120
	National	DM74H73	617-126
	TI	**SN74H73**	★ **944**
			617-128
74H74	Fairchild	74H74	615-4
	National	DM74H74	615-8
	TI	**SN74H74**	★ **945**
			615-10
74H76	National	DM74H76	617-169
	TI	**SN74H76**	★ **946**
			617-171
74H78	National	DM74H78	617-83
	TI	**SN74H78**	★ **947**
			617-85
74H87	Fairchild	74H87	638-150
	Motorola	MC74H87	638-152
	TI	**SN74H87**	★ **951**
			638-154
74HC00	Fairchild	74HC00	583-68
	Motorola	MC74HC00	583-78
	National	MM74HC00	583-87
	Panasonic	**MM74HC00**	★ **830**
			(Continued)

¶ Indicates page number in Application Note Directory.
★ Indicates addition data is provided on the page noted.

Base Number	Source	Device	Page-Line
74HC00	RCA	CD74HC00	583-98
		MN74HC00	583-100
	SPI	**SP74HC00**	★ **848**
			583-103
	Signetics	**74HC00**	★ **907**
			583-106
	TI	SN74HC00	583-119
	Toshiba	TC74HC00	583-124
74HC02	Fairchild	74HC02	585-30
	Motorola	MC74HC02	585-39
	National	MM74HC02	585-46
	Panasonic	**MN74HC02**	★ **830**
			585-49
	RCA	CD74HC02	585-58
	SPI	**SP74HC02**	★ **848**
			585-62
	Signetics	**74HC02**	★ **907**
			585-65
	TI	SN74HC02	585-79
	Toshiba	TC74HC02	585-83
74HC03	Motorola	MC74HC03	583-65
74HC04	Motorola	MC74HC04	573-193
	National	MM74HC04	574-3
	Panasonic	**MN74HC04**	★ **830**
	RCA	CD74HC04	574-11
		MN74HC04	574-14
	SPI	**SP74HC04**	★ **848**
			574-17
	Signetics	**74HC04**	★ **907**
			574-20
	TI	SN74HC04	574-32
74HC07	Fairchild	74HC07	573-91
74HC08	Fairchild	74HC08	582-118
	Motorola	MC74HC08	582-125
	National	MM74HC08	582-131
	Panasonic	**MN74HC08**	★ **830**
			582-134
	RCA	CD74HC08	582-139
	SPI	**SP74HC08**	★ **848**
			582-143
	Signetics	**74HC08**	★ **907**
			582-146
	TI	SN74HC08	582-155
	Toshiba	TC74HC08	582-158
74HC10	Fairchild	74HC10	583-16
	Motorola	MC74HC10	583-25
	National	MM74HC10	583-32
	Panasonic	**MN74HC10**	★ **830**
			583-35
	RCA	CD74HC10	583-44
	SPI	**SP74HC10**	★ **848**
			583-47
	Signetics	**74HC10**	★ **907**
			583-50
	TI	SN74HC10	583-59
	Toshiba	TC74HC10	583-63
74HC107			
	Motorola	MC74HC107	581-170
	National	MM74HC107	581-178
	Panasonic	**MN74HC107**	★ **830**
			581-180
	RCA	CD74HC107	581-185
	SPI	**SP74HC107**	★ **848**
			581-191
	Signetics	**74HC107**	★ **907**
			581-193
	TI	SN74HC107	581-199
	Toshiba	TC74HC107	582-1
74HC109			
	Fairchild	74HC109	582-8
	Motorola	MC74HC109	582-17
	National	MM74HC109	582-25
	Panasonic	**MN74HC109**	★ **830**
			582-28
	RCA	CD74HC109	582-36
	SPI	**SP74HC109**	★ **848**
			582-40
	Signetics	**74HC109**	★ **907**
			582-44
	TI	SN74HC109	582-54
74HC11	Motorola	MC74HC11	582-87
	National	MM74HC11	582-91
	Panasonic	**MN74HC11**	★ **830**
			582-93
	RCA	CD74HC11	582-98
	SPI	**SP74HC11**	★ **848**

(Continued)

Base Number	Source	Device	Page-Line
74HC11	**SPI**	**SP74HC11**	**582-101**
	Signetics	**74HC11**	★ **907**
			582-104
	TI	SN74HC11	582-113
	Toshiba	TC74HC11	582-116
74HC112			
	Fairchild	74HC112	581-153
	Motorola	MC74HC112	581-155
	National	MM74HC112	581-157
	Panasonic	**MN74HC112**	★ **830**
			581-158
	RCA	CD74HC112	581-160
	SPI	**SP74HC112**	★ **848**
			581-163
	Signetics	**74HC112**	★ **907**
			581-164
	Toshiba	TC74HC112	582-60
74HC113			
	Motorola	MC74HC113	581-145
	SPI	**SP74HC113**	★ **848**
			581-147
	TI	SN74HC113	581-149
74HC123			
	Motorola	MC74HC123	589-98
	National	MM74HC123	589-102
	Panasonic	**MN74HC123**	★ **830**
			589-103
	RCA	CD74HC123	589-108
	Signetics	**74HC123**	★ **907**
			589-112
74HC125			
	Fairchild	74HC125	572-50
	Motorola	MC74HC125	572-24
	National	MM74HC125	572-52
	SPI	**SP74HC125**	★ **848**
			572-54
74HC126			
	Motorola	MC74HC126	572-25
	National	MM74HC126	572-45
	SPI	**SP74HC126**	★ **848**
			572-46
74HC132			
	Fairchild	74HC132	593-85
	Motorola	MC74HC132	593-92
	National	MM74HC132	593-96
	RCA	CD74HC132	593-102
	SPI	**SP74HC132**	★ **848**
			593-104
	Signetics	**74HC132**	★ **907**
			593-108
	TI	SN74HC132	593-115
	Toshiba	TC74HC132	593-117
74HC133			
	Fairchild	74HC133	583-158
	Motorola	MC74HC133	583-160
	National	MM74HC133	583-162
	Panasonic	**MN74HC133**	★ **830**
			583-163
	SPI	**SP74HC133**	★ **848**
			583-165
	TI	SN74HC133	583-167
74HC137			
	Motorola	MC74HC137	579-6
	TI	SN74HC137	579-17
74HC138			
	Fairchild	74HC138	578-147
	Motorola	MC74HC138	578-155
	National	MM74HC138	578-158
	Panasonic	**MN74HC138**	★ **830**
			578-160
	RCA	CD74HC138	578-164
	SPI	**SP74HC138**	★ **848**
			578-169
	Signetics	**74HC138**	★ **907**
			578-172
	TI	SN74HC138	578-183
	Toshiba	TC74HC138	578-185
74HC139			
	Fairchild	74HC139	578-105
	Motorola	MC74HC139	578-112
	National	MM74HC139	578-114
	Panasonic	**MN74HC139**	★ **830**
			578-115
	RCA	CD74HC139	578-119
	SPI	**SP74HC139**	★ **848**
			578-122

(Continued)

Base Number	Source	Device	Page-Line
74HC139			
	Signetics	**74HC139**	★ **907**
			578-125
	TI	SN74HC139	578-134
	Toshiba	TC74HC139	578-136
74HC14	Fairchild	74HC14	573-166
	Motorola	MC74HC14	593-128
	National	MM74HC14	593-121
	Panasonic	**MN74HC14**	★ **830**
			593-137
	RCA	CD74HC14	593-142
	SPI	**SP74HC14**	★ **848**
			593-145
	Signetics	**74HC14**	★ **907**
			593-148
	TI	SN74HC14	593-156
	Toshiba	TC74HC14	573-167
74HC147			
	Fairchild	74HC147	589-57
			589-61
	Motorola	MC74HC147	579-93
	National	MM74HC147	589-59
			589-63
	RCA	CD74HC147	579-96
	SPI	**SP74HC147**	★ **848**
			579-99
	Signetics	**74HC147**	★ **907**
			579-100
	Toshiba	TC74HC147	595-24
74HC148			
	SPI	**SP74HC148**	★ **848**
			579-90
	Toshiba	TC74HC148	579-91
74HC151			
	Fairchild	74HC151	588-164
	Motorola	MC74HC151	588-166
	National	MM74HC151	588-170
	Panasonic	**MN74HC151**	★ **830**
			588-171
	RCA	CD74HC151	588-174
	SPI	**SP74HC151**	★ **848**
			588-177
	Signetics	**74HC151**	★ **907**
			588-178
	TI	SN74HC151	588-181
	Toshiba	TC74HC151	588-183
74HC153			
	Fairchild	74HC153	589-17
	Motorola	MC74HC153	588-57
	National	MM74HC153	588-76
	RCA	CD74HC153	588-79
	SPI	**SP74HC153**	★ **848**
			588-60
	Signetics	**74HC153**	★ **907**
			589-20
	Toshiba	TC74HC153	589-24
74HC154			
	Fairchild	74HC154	579-72
	Motorola	MC74HC154	579-75
	National	MM74HC154	579-79
	Panasonic	**MN74HC154**	★ **830**
			579-80
	RCA	CD74HC154	579-83
	Signetics	**74HC154**	★ **907**
			579-85
	TI	SN74HC154	579-88
74HC157			
	Motorola	MC74HC157	588-82
	National	MM74HC157	588-87
	Panasonic	**MN74HC157**	★ **830**
			588-89
	RCA	CD74HC157	588-92
	SPI	**SP74HC157**	★ **848**
			588-95
	Signetics	**74HC157**	★ **907**
			588-96
	TI	SN74HC157	588-99
	Toshiba	TC74HC157	588-101
74HC158			
	Motorola	MC74HC158	588-105
	National	MM74HC158	588-88
	Panasonic	**MN74HC158**	★ **830**
			588-106
	RCA	CD74HC158	588-109
	SPI	**SP74HC158**	★ **848**
			588-112

(Continued)

Base Number	Source	Device	Page-Line
74HC158			
	Signetics	**74HC158**	★ **907**
			588-113
	TI	SN74HC158	588-118
	Toshiba	TC74HC158	588-120
74HC160			
	Fairchild	74HC160	576-95
	Motorola	MC74HC160	576-102
	National	MM74HC160	576-108
	Panasonic	**MN74HC160**	★ **830**
			576-109
	RCA	CD74HC160	576-114
	SPI	**SP74HC160**	★ **848**
			576-117
	Signetics	**74HC160**	★ **907**
			588-114
	TI	SN74HC160	576-125
	Toshiba	TC74HC160	576-128
74HC161			
	Motorola	MC74HC161	574-85
	National	MM74HC161	574-91
	Panasonic	**MN74HC161**	★ **830**
			574-93
	RCA	CD74HC161	574-98
	SPI	**SP74HC161**	★ **848**
			574-101
	Signetics	**74HC161**	★ **907**
			574-104
	Toshiba	TC74HC161	574-112
74HC162			
	Fairchild	74HC162	576-55
	Motorola	MC74HC162	576-62
	National	MM74HC162	576-68
	RCA	CD74HC162	576-73
	SPI	**SP74HC162**	★ **848**
			576-76
	Signetics	**74HC162**	★ **907**
			576-79
	TI	SN74HC162	576-86
	Toshiba	TC74HC162	576-89
74HC163			
	Fairchild	74HC163	574-43
	Motorola	MC74HC163	574-50
	National	MM74HC163	574-56
	Panasonic	**MN74HC163**	★ **831**
			574-57
	RCA	CD74HC163	574-62
	SPI	**SP74HC163**	★ **848**
			574-65
	Signetics	**74HC163**	★ **907**
			574-68
	Toshiba	TC74HC163	574-76
74HC164			
	Fairchild	74HC164	591-97
	Motorola	MC74HC164	591-99
	National	MM74HC164	591-103
	RCA	CD74HC164	591-106
	SPI	SP74HC164	591-108
	Signetics	**74HC164**	★ **907**
			591-109
	TI	SN74HC164	591-112
	Toshiba	TC74HC164	591-114
74HC165			
	Fairchild	74HC165	591-69
	Motorola	MC74HC165	591-71
	National	MM74HC165	591-75
	RCA	CD74HC165	591-78
	Signetics	**74HC165**	★ **907**
			591-82
	TI	SN74HC165	591-87
	Toshiba	TC74HC165	591-89
74HC166			
	Motorola	MC74HC166	591-118
	RCA	CD74HC166	591-79
	Signetics	**74HC166**	★ **907**
			591-83
74HC167			
	SPI	SP74HC167	592-140
74HC173			
	Fairchild	74HC173	580-90
	Motorola	MC74HC173	580-97
	RCA	CD74HC173	580-107
	SPI	**SP74HC173**	★ **848**
			580-110
	Signetics	**74HC173**	★ **907**
			580-113

(Continued)

Arranged alphanumerically from left to right

© IC MASTER 1984

Base Number	Source	Device	Page-Line
74HC173			
	TI	SN74HC173	580-122
	Toshiba	TC74HC173	580-124
74HC174			
	Motorola	MC74HC174	580-161
	Panasonic	**MN74HC174**	★ **831**
			580-166
	RCA	CD74HC174	580-171
	SPI	**SP74HC174**	★ **848**
			580-175
	Signetics	**74HC174**	★ **907**
			580-178
	TI	SN74HC174	580-185
	Toshiba	TC74HC174	580-188
74HC175			
	Fairchild	74HC175	580-126
	Motorola	MC74HC175	580-133
	National	MM74HC175	580-138
	Panasonic	**MN74HC175**	★ **831**
	RCA	CD74HC175	580-143
	SPI	**SP74HC175**	★ **848**
			580-145
	Signetics	**74HC175**	★ **907**
			580-146
	TI	SN74HC175	580-151
	Toshiba	TC74HC175	580-154
74HC176			
	SPI	**SP74HC176**	★ **848**
			592-60
74HC177			
	SPI	**SP74HC177**	★ **848**
			592-61
74HC181			
	Motorola	MC74HC181	571-80
74HC182			
	Motorola	MC74HC182	571-94
	SPI	SP74HC182	571-97
74HC190			
	Motorola	MC74HC190	577-12
	RCA	CD74HC190	577-15
	Signetics	**74HC190**	★ **907**
			576-182
74HC191			
	Motorola	MC74HC191	574-130
	RCA	CD74HC191	574-150
	Signetics	**74HC191**	★ **907**
			574-158
74HC192			
	Fairchild	74HC192	576-132
	Motorola	MC74HC192	576-142
	National	MM74HC192	576-150
	Panasonic	**MN74HC192**	★ **831**
			576-151
	RCA	CD74HC192	576-158
	SPI	**SP74HC192**	★ **848**
			576-161
	Signetics	**74HC192**	★ **907**
			576-166
	TI	SN74HC192	576-177
	Toshiba	TC74HC192	576-181
74HC193			
	Fairchild	74HC193	574-118
	Motorola	MC74HC193	574-131
	National	MM74HC193	574-139
	Panasonic	**MN74HC193**	★ **831**
			574-141
	RCA	CD74HC193	574-151
	SPI	**SP74HC193**	★ **848**
			574-155
	Signetics	**74HC193**	★ **907**
			574-159
	Toshiba	TC74HC193	574-173
74HC194			
	Motorola	MC74HC194	590-101
	National	MM74HC194	590-105
	RCA	CD74HC194	590-108
	SPI	SP74HC194	590-110
	Signetics	**74HC194**	★ **907**
			590-113
	TI	SN74HC194	590-116
	Toshiba	TC74HC194	590-118
74HC195			
	Fairchild	74HC195	590-126
	Motorola	MC74HC195	590-130
	National	MM74HC195	590-136
	RCA	CD74HC195	590-139
	SPI	SP74HC195	590-141
			(Continued)

Base Number	Source	Device	Page-Line
74HC195			
	Signetics	**74HC195**	★ **907**
			590-142
	TI	SN74HC195	590-147
	Toshiba	TC74HC195	590-148
74HC20	Fairchild	74HC20	582-169
	Motorola	MC74HC20	582-178
	National	MM74HC20	583-33
	Panasonic	**MN74HC20**	★ **830**
			582-185
	RCA	CD74HC20	582-194
	SPI	**SP74HC20**	★ **848**
			582-197
	Signetics	**74HC20**	★ **907**
			583-1
	TI	SN74HC20	583-10
	Toshiba	TC74HC20	583-14
74HC200			
	Western	WD74HC200	587-157
74HC21	**Panasonic**	**MN74HC21**	★ **830**
74HC221			
	Fairchild	74HC221	589-121
	Motorola	MC74HC221	589-129
	Panasonic	**MN74HC221**	★ **831**
			589-138
	RCA	CD74HC221	589-147
	Signetics	**74HC221**	★ **907**
			589-153
	TI	SN74HC221	589-163
	Toshiba	TC74HC221	589-166
74HC237			
	Motorola	MC74HC237	579-7
74HC238			
	RCA	CD74HC238	578-165
	SPI	SP74HC238	578-143
	Signetics	**74HC238**	★ **907**
			578-173
74HC239			
	SPI	SP74HC239	578-142
74HC240			
	Fairchild	74HC240	594-5
	Motorola	MC74HC240	594-13
	National	MM74HC240	594-18
	Panasonic	**MN74HC240**	★ **831**
			594-19
	RCA	CD74HC240	594-22
	SPI	**SP74HC240**	★ **848**
			594-26
	Signetics	**74HC240**	★ **907**
			594-29
	Toshiba	TC74HC240	594-36
74HC241			
	Fairchild	74HC241	594-43
	Motorola	MC74HC241	594-51
	National	MM74HC241	594-54
	Panasonic	**MN74HC241**	★ **831**
			594-55
	RCA	CD74HC241	594-58
	SPI	**SP74HC241**	★ **848**
			594-62
	Signetics	**74HC241**	★ **907**
			594-65
	Toshiba	TC74HC241	594-71
74HC242			
	Fairchild	74HC242	593-52
	Motorola	MC74HC242	593-56
	National	MM74HC242	593-59
	Panasonic	**MN74HC242**	★ **831**
			593-60
	RCA	CD74HC242	593-66
	SPI	SP74HC242	593-47
	Signetics	**74HC242**	★ **907**
			593-70
	Toshiba	TC74HC242	593-48
74HC243			
	Fairchild	74HC243	593-53
	Motorola	MC74HC243	593-57
	Panasonic	**MN74HC243**	★ **831**
			593-61
	RCA	CD74HC243	593-67
	Signetics	**74HC243**	★ **907**
			593-71
	Toshiba	TC74HC243	593-49
74HC244			
	Fairchild	74HC244	593-159
	Motorola	MC74HC244	593-167
	National	MM74HC244	593-172
			(Continued)

Base Number	Source	Device	Page-Line
74HC244			
	Panasonic	**MN74HC244**	★ **831**
			593-173
	RCA	CD74HC244	593-176
	SPI	**SP74HC244**	★ **848**
			593-179
	Signetics	**74HC244**	★ **907**
			593-182
	Toshiba	TC74HC244	593-189
74HC245			
	Fairchild	74HC245	594-133
	Motorola	MC74HC245	594-141
	Panasonic	**MN74HC245**	★ **831**
			594-143
	RCA	CD74HC245	594-146
	Signetics	**74HC245**	★ **907**
			594-152
	TI	SN74HC245	594-160
	Toshiba	TC74HC245	594-163
74HC251			
	Fairchild	74HC251	589-18
	Motorola	MC74HC251	589-33
	National	MM74HC251	589-13
	RCA	CD74HC251	589-42
	SPI	**SP74HC251**	★ **848**
			589-49
	Signetics	**74HC251**	★ **907**
			589-21
	Toshiba	TC74HC251	589-25
74HC253			
	Fairchild	74HC253	588-47
	Motorola	MC74HC253	588-66
	National	MM74HC253	588-68
	RCA	CD74HC253	588-71
	SPI	**SP74HC253**	★ **848**
			588-74
	Signetics	**74HC253**	★ **907**
			588-48
	Toshiba	TC74HC253	588-50
74HC257			
	Fairchild	74HC257	588-124
	Motorola	MC74HC257	588-126
	National	MM74HC257	588-128
	RCA	CD74HC257	588-133
	SPI	**SP74HC257**	★ **848**
			588-136
	Signetics	**74HC257**	★ **907**
			588-139
	Toshiba	TC74HC257	588-141
74HC258			
	SPI	**SP74HC258**	★ **848**
			588-145
	Toshiba	TC74HC258	588-146
74HC259			
	Fairchild	74HC259	587-45
	Motorola	MC74HC259	587-52
	National	MM74HC259	587-59
	RCA	CD74HC259	587-67
	Signetics	**74HC259**	★ **907**
			587-71
	TI	SN74HC259	587-78
	Toshiba	TC74HC259	587-81
74HC266			
	Motorola	MC74HC266	585-175
	National	MM74HC266	584-56
	Panasonic	**MN74HC266**	★ **831**
			585-176
	SPI	**SP74HC266**	★ **848**
			585-180
	TI	SN74HC266	585-190
	Toshiba	TC74HC266	585-191
74HC27	Fairchild	74HC27	584-179
	Motorola	MC74HC27	584-188
	National	MM74HC27	584-193
	Panasonic	**MN74HC27**	★ **830**
			585-1
	RCA	CD74HC27	585-10
	SPI	**SP74HC27**	★ **848**
			585-13
	Signetics	**74HC27**	★ **907**
			585-16
	TI	SN74HC27	585-25
	Toshiba	TC74HC27	585-28
74HC273			
	Fairchild	74HC273	580-190
	Motorola	MC74HC273	581-1
			(Continued)

Base Number	Source	Device	Page-Line
74HC273			
	Panasonic	**MN74HC273**	★ **831**
			581-2
	RCA	CD74HC273	581-5
	SPI	**SP74HC273**	★ **848**
			581-8
	Signetics	**74HC273**	★ **907**
			581-9
	TI	SN74HC273	581-12
	Toshiba	TC74HC273	581-14
74HC280			
	Fairchild	74HC280	571-180
	Motorola	MC74HC280	571-182
	National	MM74HC280	571-184
	Panasonic	**MN74HC280**	★ **831**
	RCA	CD74HC280	571-187
	SPI	**SP74HC280**	★ **848**
			572-3
	Signetics	**74HC280**	★ **907**
			572-4
74HC283			
	Fairchild	74HC283	571-32
	Motorola	MC74HC283	571-39
74HC292			
	Motorola	MC74HC292	592-119
74HC294			
	Motorola	MC74HC294	592-120
74HC297			
	RCA	CD74HC297	592-73
			592-114
	Signetics	**74HC297**	★ **907**
			592-75
74HC298			
	Motorola	MC74HC298	588-150
	SPI	**SP74HC298**	★ **848**
			588-152
74HC299			
	Fairchild	74HC299	591-148
	Motorola	MC74HC299	591-150
	National	MM74HC299	591-152
	RCA	CD74HC299	591-155
	Signetics	**74HC299**	★ **907**
			591-157
	TI	SN74HC299	591-160
74HC30	Fairchild	74HC30	583-128
	Motorola	MC74HC30	583-135
	National	MM74HC30	583-139
	Panasonic	**MN74HC30**	★ **830**
			583-140
	SPI	**SP74HC30**	★ **848**
			583-144
	TI	SN74HC30	583-154
	Toshiba	TC74HC30	583-156
74HC32	Fairchild	74HC32	584-78
	Motorola	MC74HC32	584-85
	National	MM74HC32	584-91
	Panasonic	**MN74HC32**	★ **830**
			584-93
	RCA	CD74HC32	584-98
	SPI	**SP74HC32**	★ **848**
			584-102
	Signetics	**74HC32**	★ **907**
			584-105
	TI	SN74HC32	584-114
	Toshiba	TC74HC32	584-117
74HC354			
	Motorola	MC74HC354	589-34
	National	MM74HC354	589-28
	RCA	CD74HC354	589-43
	Signetics	**74HC354**	★ **907**
			589-50
	Toshiba	TC74HC354	589-54
74HC356			
	Motorola	MC74HC356	589-35
	National	MM74HC356	589-29
	RCA	CD74HC356	589-44
	Signetics	**74HC356**	★ **907**
			589-51
	Toshiba	TC74HC356	589-55
74HC365			
	Fairchild	74HC365	573-35
	Motorola	MC74HC365	573-44
	National	MM74HC365	573-52
	Panasonic	**MN74HC365**	★ **831**
			573-57
	RCA	CD74HC365	573-65
	SPI	**SP74HC365**	★ **848**
			(Continued)

¶ Indicates page number in Application Note Directory.
★ Indicates addition data is provided on the page noted.

Base Number	Source	Device	Page-Line
74HC365			
	SPI	**SP74HC365**	**573-70**
	Signetics	**74HC365** ★	**907**
			573-72
	TI	SN74HC365	573-79
	Toshiba	TC74HC365	573-83
74HC366			
	Fairchild	74HC366	572-177
	Motorola	MC74HC366	573-3
	National	MM74HC366	573-7
	Panasonic	**MN74HC366** ★	**831**
			573-9
	RCA	CD74HC366	573-15
	Signetics	**74HC366** ★	**908**
			573-19
	TI	SN74HC366	573-25
	Toshiba	TC74HC366	572-71
74HC367			
	Fairchild	74HC367	573-36
	Motorola	MC74HC367	573-45
	National	MM74HC367	573-53
	Panasonic	**MN74HC367** ★	**831**
			573-58
	RCA	CD74HC367	573-66
	SPI	SP74HC367	573-71
	Signetics	**74HC367** ★	**908**
			573-73
	Toshiba	TC74HC367	573-84
74HC368			
	Fairchild	74HC368	572-178
	Motorola	MC74HC368	573-4
	National	MM74HC368	573-8
	Panasonic	**MN74HC368** ★	**831**
			573-10
	RCA	CD74HC368	573-16
	Signetics	**74HC368** ★	**908**
			573-20
	TI	SN74HC368	573-26
	Toshiba	TC74HC368	572-72
74HC373			
	Fairchild	74HC373	586-126
	Motorola	MC74HC373	586-140
	National	MM74HC373	586-145
	Panasonic	**MN74HC373** ★	**831**
			586-147
	RCA	CD74HC373	586-153
	SPI	**SP74HC373** ★	**848**
			586-161
	Signetics	**74HC373** ★	**908**
			586-167
	Toshiba	TC74HC373	586-181
74HC374			
	Fairchild	74HC374	581-69
	Motorola	MC74HC374	581-83
	National	MM74HC374	581-90
	Panasonic	**MN74HC374** ★	**831**
			581-92
	RCA	CD74HC374	581-99
	SPI	**SP74HC374** ★	**848**
			581-107
	Signetics	**74HC374** ★	**908**
			581-113
	TI	SN74HC374	581-126
	Toshiba	TC74HC374	581-129
74HC377			
	RCA	CD74HC377	581-23
	Signetics	**74HC377** ★	**908**
			581-25
74HC384			
	RCA	**CD74HC384** ★	**843**
			571-147
	Signetics	**74HC384** ★	**908**
			571-149
74HC390			
	Fairchild	74HC390	577-50
	Motorola	MC74HC390	577-25
	National	MM74HC390	577-52
	Panasonic	**MN74HC390** ★	**831**
			577-53
	RCA	**CD74HC390** ★	**843**
			577-56
	Signetics	**74HC390** ★	**908**
			577-58
	TI	SN74HC390	577-46
	Toshiba	TC74HC390	577-48

Base Number	Source	Device	Page-Line
74HC393			
	Fairchild	74HC393	575-27
	Motorola	MC74HC393	575-7
	National	MM74HC393	575-29
	Panasonic	**MN74HC393** ★	**831**
			575-30
	RCA	**CD74HC393** ★	**843**
			575-33
	SPI	**SP74HC393** ★	**848**
			575-36
	Signetics	**74HC393** ★	**908**
			575-37
	TI	SN74HC393	575-24
	Toshiba	TC74HC393	575-40
74HC4002			
	Motorola	MC74HC4002	584-147
	National	MM74HC4002	584-152
	Panasonic	**MN74HC4002** ★	**831**
			584-154
	RCA	**CD74HC4002** ★	**843**
			584-163
	SPI	SP74HC4002	584-165
	Signetics	**74HC4002** ★	**908**
			584-168
	Toshiba	TC74HC4002	584-177
74HC40102			
	RCA	**CD74HC40102** ★	**843**
			576-188
74HC40103			
	RCA	**CD74HC40103** ★	**843**
			575-80
	Signetics	**74HC40103** ★	**908**
			575-82
74HC40104			
	RCA	**CD74HC40104** ★	**843**
			590-121
	Signetics	74HC40104	590-123
74HC40105			
	RCA	**CD74HC40105** ★	**843**
			587-89
	Signetics	**74HC40105** ★	**908**
			587-91
74HC4015			
	RCA	**CD74HC4015** ★	**843**
			590-64
	Signetics	**74HC4015** ★	**908**
			590-68
74HC4016			
	Motorola	MC74HC4016	2617-62
	RCA	**CD74HC4016** ★	**843**
	Signetics	**74HC4016** ★	**908**
74HC4017			
	Fairchild	74HC4017	576-14
	Motorola	MC74HC4017	576-21
	National	MM74HC4017	576-25
	RCA	**CD74HC4017** ★	**843**
			576-33
	SPI	**SP74HC4017** ★	**848**
			576-36
	Signetics	**74HC4017** ★	**908**
			576-39
	TI	SN74HC4017	576-48
	Toshiba	TC74HC4017	576-50
74HC4018			
	National	MM74HC4018	585-94
74HC4020			
	Fairchild	74HC4020	575-124
	Motorola	MC74HC4020	575-131
	National	MM74HC4020	575-135
	RCA	**CD74HC4020** ★	**843**
			575-142
	SPI	**SP74HC4020** ★	**848**
			575-145
	Signetics	**74HC4020** ★	**908**
			575-148
	Toshiba	TC74HC4020	575-157
74HC4022			
	Toshiba	TC74HC4022	577-130
74HC4024			
	Motorola	MC74HC4024	575-54
	RCA	**CD74HC4024** ★	**843**
			575-64
	Signetics	**74HC4024** ★	**908**
			575-68
	Toshiba	TC74HC4024	575-77

Base Number	Source	Device	Page-Line
74HC4040			
	Fairchild	74HC4040	575-87
	Motorola	MC74HC4040	575-94
	National	MM74HC4040	575-98
	Panasonic	**MN74HC4040** ★	**831**
			575-100
	RCA	**CD74HC4040** ★	**843**
			575-107
	SPI	SP74HC4040	575-109
	Signetics	**74HC4040** ★	**908**
			575-112
	Toshiba	TC74HC4040	575-121
74HC4046			
	Fairchild	74HC4046	589-73
	Motorola	MC74HC4046	592-91
	RCA	**CD74HC4046** ★	**843**
			592-100
	Signetics	**74HC4046** ★	**908**
			592-104
74HC4047			
	Fairchild	74HC4047	589-74
74HC4049			
	Fairchild	74HC4049	572-86
	Motorola	MC74HC4049	572-93
	National	MM74HC4049	572-96
	Panasonic	**MN74HC4049** ★	**831**
			572-98
	RCA	**CD74HC4049** ★	**843**
			572-104
	Signetics	**74HC4049** ★	**908**
			572-107
	Toshiba	TC74HC4049	572-117
74HC4050			
	Fairchild	74HC4050	572-130
	Motorola	MC74HC4050	572-137
	National	MM74HC4050	572-141
	Panasonic	**MN74HC4050** ★	**831**
			572-143
	RCA	**CD74HC4050** ★	**843**
			572-149
	Signetics	**74HC4050** ★	**908**
			572-152
	Toshiba	TC74HC4050	572-162
74HC4051			
	Fairchild	74HC4051	595-18
	Motorola	MC74HC4051	2623-37
	Panasonic	**MN74HC4051** ★	**831**
			2623-41
	RCA	**CD74HC4051** ★	**843**
			2623-44
	Signetics	**74HC4051** ★	**908**
			595-19
	Toshiba	TC74HC4051	595-21
74HC4052			
	Fairchild	74HC4052	593-38
	Motorola	MC74HC4052	2622-82
	Panasonic	**MN74HC4052** ★	**831**
			2622-87
	RCA	**CD74HC4052** ★	**843**
			2622-90
	Signetics	**74HC4052** ★	**908**
			593-39
	Toshiba	TC74HC4052	593-41
74HC4053			
	Fairchild	74HC4053	593-43
	Motorola	MC74HC4053	2619-61
	Panasonic	**MN74HC4053** ★	**831**
			2619-66
	RCA	**CD74HC4053** ★	**843**
			2619-69
	Signetics	**74HC4053** ★	**908**
			593-44
	Toshiba	TC74HC4053	593-46
74HC4060			
	Motorola	MC74HC4060	575-160
	National	MM74HC4060	575-164
	RCA	**CD74HC4060** ★	**843**
			575-171
	Signetics	**74HC4060** ★	**908**
			575-175
	TI	SN74HC4060	575-182
	Toshiba	TC74HC4060	575-183
74HC4066			
	Motorola	MC74HC4066	2617-30
	Panasonic	**MN74HC4066** ★	**831**
			2617-34
			(Continued)

Base Number	Source	Device	Page-Line
74HC4066			
	RCA	**CD74HC4066** ★	**843**
			2617-39
	Signetics	**74HC4066** ★	**908**
74HC4067			
	Panasonic	**MN74HC4067** ★	**831**
	RCA	**CD74HC4067** ★	**843**
	Signetics	**74HC4067** ★	**908**
74HC4075			
	Motorola	MC74HC4075	584-52
	Panasonic	**MN74HC4075** ★	**831**
			584-58
	RCA	**CD74HC4075** ★	**843**
			584-63
	Signetics	**74HC4075** ★	**908**
			584-67
	TI	SN74HC4075	584-74
	Toshiba	TC74HC4075	584-76
74HC4078			
	Motorola	MC74HC4078	585-92
	Panasonic	**MN74HC4078** ★	**831**
			585-96
	Toshiba	TC74HC4078	585-110
74HC4094			
	RCA	**CD74HC4094** ★	**843**
			591-56
	Signetics	**74HC4094** ★	**908**
			591-60
74HC42	Motorola	MC74HC42	578-33
	National	MM74HC42	578-39
	Panasonic	**MN74HC42** ★	**830**
			578-41
	RCA	CD74HC42	578-48
	SPI	**SP74HC42** ★	**848**
			578-51
	Signetics	**74HC42** ★	**907**
			578-54
	TI	SN74HC42	578-63
	Toshiba	TC74HC42	578-66
74HC423			
	Motorola	MC74HC423	589-130
	RCA	**CD74HC423** ★	**843**
			589-148
	Signetics	**74HC423** ★	**908**
			589-154
	TI	SN74HC423	589-164
74HC4301			
	National	MM74HC4301	587-39
74HC4302			
	National	MM74HC4302	587-37
74HC4303			
	National	MM74HC4303	581-20
74HC4304			
	National	MM74HC4304	581-18
74HC4305			
	National	MM74HC4305	573-94
74HC4316			
	Motorola	MC74HC4316	2617-63
74HC4351			
	Motorola	MC74HC4351	2623-38
74HC4352			
	Motorola	MC74HC4352	2622-83
74HC4353			
	Motorola	MC74HC4353	2619-62
74HC4510			
	Fairchild	74HC4510	577-10
74HC4511			
	Motorola	MC74HC4511	579-180
	National	MM74HC4511	580-5
	RCA	**CD74HC4511** ★	**843**
			580-12
	Signetics	**74HC4511** ★	**908**
			580-16
	Toshiba	TC74HC4511	580-28
74HC4512			
	Fairchild	74HC4512	589-19
74HC4514			
	Fairchild	74HC4514	579-73
	Motorola	MC74HC4514	579-29
	National	MM74HC4514	579-35
	RCA	**CD74HC4514** ★	**843**
			579-44
	Signetics	**74HC4514** ★	**908**
			579-52
74HC4515			
	RCA	**CD74HC4515** ★	**843**
			579-45
			(Continued)

Arranged alphanumerically from left to right.

Base Number	Source	Device	Page-Line
74HC4515			
	Signetics	**74HC4515** ★	**908**
			579-53
74HC4516			
	Fairchild	74HC4516	574-119
74HC4518			
	RCA	**CD74HC4518** ★	**843**
			577-33
	Signetics	**74HC4518** ★	**908**
			577-37
74HC4520			
	RCA	**CD74HC4520** ★	**843**
			575-43
	Signetics	**74HC4520** ★	**908**
			575-15
74HC4538			
	Fairchild	74HC4538	589-122
	Motorola	MC74HC4538	589-131
	RCA	**CD74HC4538** ★	**843**
			589-149
	Signetics	**74HC4538** ★	**908**
			589-155
	Toshiba	TC74HC4538	589-167
74HC4543			
	Motorola	MC74HC4543	579-134
	National	MM74HC4543	580-6
	RCA	**CD74HC4543** ★	**843**
			579-139
	Signetics	**74HC4543** ★	**908**
			579-141
	Toshiba	TC74HC4543	579-148
74HC4703			
	Fairchild	74HC4703	592-70
74HC51	Motorola	MC74HC51	584-13
	National	MM74HC51	584-15
	Panasonic	**MN74HC51** ★	**830**
			584-16
	Toshiba	TC74HC51	584-17
74HC533			
	Fairchild	74HC533	586-190
	Motorola	MC74HC533	586-196
	National	MM74HC533	587-3
	RCA	**CD74HC533** ★	**843**
			587-11
	SPI	**SP74HC533** ★	**848**
			587-16
	Signetics	**74HC533** ★	**908**
			587-17
	TI	SN74HC533	587-29
	Toshiba	TC74HC533	587-31
74HC534			
	Fairchild	74HC534	581-29
	Motorola	MC74HC534	581-34
	National	MM74HC534	581-39
	RCA	**CD74HC534** ★	**843**
			581-45
	SPI	SP74HC534	581-49
	Signetics	**74HC534** ★	**908**
			581-50
	TI	SN74HC534	581-61
	Toshiba	TC74HC534	581-62
74HC540			
	Motorola	MC74HC540	573-107
	RCA	**CD74HC540** ★	**843**
			573-115
	SPI	**SP74HC540** ★	**848**
			573-121
	Signetics	**74HC540** ★	**908**
			573-127
74HC541			
	Motorola	MC74HC541	573-108
	RCA	**CD74HC541** ★	**843**
			573-116
	SPI	**SP74HC541** ★	**848**
			573-122
	Signetics	**74HC541** ★	**908**
			573-128
74HC543			
	Fairchild	74HC543	594-170
74HC544			
	Fairchild	74HC544	594-171
74HC550			
	Fairchild	74HC550	594-176
			594-180
74HC551			
	Fairchild	74HC551	594-177
			594-181
74HC563			
	Fairchild	74HC563	586-191
	Motorola	MC74HC563	586-197
	National	MM74HC563	587-4
	RCA	**CD74HC563** ★	**843**
			587-12
	Signetics	**74HC563** ★	**908**
			587-18
	TI	SN74HC563	587-30
74HC564			
	Fairchild	74HC564	581-30
	Motorola	MC74HC564	581-35
	National	MM74HC564	581-40
	RCA	**CD74HC564** ★	**843**
			581-46
	Signetics	**74HC564** ★	**908**
			581-51
74HC568			
	Fairchild	74HC568	577-18
74HC569			
	Fairchild	74HC569	574-120
74HC573			
	Fairchild	74HC573	586-127
	Motorola	MC74HC573	586-141
	National	MM74HC573	586-146
	RCA	**CD74HC573** ★	**843**
			586-154
	SPI	**SP74HC573** ★	**848**
			586-162
	Signetics	**74HC573** ★	**908**
			586-168
	TI	SN74HC573	586-179
	Toshiba	TC74HC573	586-182
74HC574			
	Fairchild	74HC574	581-70
	Motorola	MC74HC574	581-84
	National	MM74HC574	581-91
	RCA	**CD74HC574** ★	**843**
			581-100
	SPI	**SP74HC574** ★	**848**
			581-108
	Signetics	**74HC574** ★	**908**
			581-114
	TI	SN74HC574	581-127
	Toshiba	TC74HC574	581-130
74HC58	Motorola	MC74HC58	583-191
	National	MM74HC58	583-193
74HC589			
	Motorola	MC74HC589	591-130
74HC595			
	Motorola	MC74HC595	591-121
	TI	SN74HC595	591-123
74HC597			
	Motorola	MC74HC597	591-93
	TI	SN74HC597	591-95
74HC640			
	Fairchild	74HC640	594-106
	Motorola	MC74HC640	594-110
	RCA	**CD74HC640** ★	**843**
			594-120
	Signetics	**74HC640** ★	**908**
			594-124
	Toshiba	TC74HC640	594-107
74HC643			
	Fairchild	74HC643	594-103
	Motorola	MC74HC643	594-111
	RCA	**CD74HC643** ★	**843**
			594-121
	Signetics	**74HC643** ★	**908**
			594-125
	Toshiba	TC74HC643	594-104
74HC645			
	Fairchild	74HC645	594-167
	TI	SN74HC645	594-161
74HC646			
	Fairchild	74HC646	594-89
	Motorola	MC74HC646	594-91
	National	MM74HC646	594-93
	RCA	**CD74HC646** ★	**843**
			594-96
	Signetics	**74HC646** ★	**908**
			594-98
	TI	SN74HC646	594-101
74HC648			
	Fairchild	74HC648	594-75
			594-173
	Motorola	MC74HC648	594-77
			(Continued)
74HC648			
	National	MM74HC648	594-79
	RCA	**CD74HC648** ★	**843**
			594-82
	Signetics	**74HC648** ★	**908**
			594-84
	TI	SN74HC648	594-87
74HC670			
	RCA	**CD74HC670** ★	**843**
			587-108
	Signetics	**74HC670** ★	**908**
			587-112
	Toshiba	TC74HC670	587-114
74HC688			
	Fairchild	74HC688	571-62
			571-140
	Motorola	MC74HC688	571-142
	National	MM74HC688	592-67
	RCA	**CD74HC688** ★	**843**
			571-67
	Signetics	**74HC688** ★	**908**
			571-69
	TI	SN74HC688	571-144
	Toshiba	TC74HC688	571-71
74HC73	Motorola	MC74HC73	581-171
	National	MM74HC73	581-179
	RCA	CD74HC73	581-186
	SPI	**SP74HC73** ★	**848**
			581-192
	Signetics	**74HC73** ★	**907**
			581-194
	TI	SN74HC73	581-200
74HC74	Fairchild	74HC74	580-42
	Motorola	MC74HC74	580-49
	National	MM74HC74	580-55
	Panasonic	**MN74HC74** ★	**830**
			580-58
	RCA	CD74HC74	580-65
	SPI	**SP74HC74** ★	**848**
			580-69
	Signetics	**74HC74** ★	**907**
			580-72
	TI	SN74HC74	580-83
	Toshiba	TC74HC74	580-86
74HC75	Fairchild	74HC75	586-46
	Motorola	MC74HC75	586-53
	National	MM74HC75	586-57
	Panasonic	**MN74HC75** ★	**830**
			586-58
	RCA	CD74HC75	586-65
	SPI	**SP74HC75** ★	**848**
			586-68
	Signetics	**74HC75** ★	**907**
			586-71
	TI	SN74HC75	586-80
74HC76	Fairchild	74HC76	582-9
	Motorola	MC74HC76	582-18
	National	MM74HC76	582-26
	Panasonic	**MN74HC76** ★	**830**
			582-29
	SPI	**SP74HC76** ★	**848**
			582-41
	TI	SN74HC76	582-55
	Toshiba	TC74HC76	582-61
74HC77	Motorola	MC74HC77	586-41
	National	MM74HC77	587-60
	SPI	**SP74HC77** ★	**848**
			586-43
	TI	SN74HC77	586-39
74HC80	**SPI**	**SP74HC80** ★	**848**
			571-73
74HC82	**SPI**	**SP74HC82** ★	**848**
			571-30
74HC83	SPI	SP74HC83	571-48
74HC85	Fairchild	74HC85	571-103
	Motorola	MC74HC85	571-110
	National	MM74HC85	571-114
	Panasonic	**MN74HC85** ★	**830**
			571-116
	RCA	CD74HC85	571-123
	SPI	SP74HC85	571-125
	Signetics	**74HC85** ★	**907**
			571-128
	TI	SN74HC85	571-135
	Toshiba	TC74HC85	571-138
74HC86	Fairchild	74HC86	585-112
	Motorola	MC74HC86	585-121
	National	MM74HC86	585-130
	Panasonic	**MN74HC86** ★	**830**
			585-133
	RCA	CD74HC86	585-142
	SPI	**SP74HC86** ★	**848**
			585-145
	Signetics	**74HC86** ★	**907**
			585-150
	TI	SN74HC86	585-165
	Toshiba	TC74HC86	585-168
74HC90	**SPI**	**SP74HC90** ★	**848**
			576-53
74HC93	**SPI**	**SP74HC93** ★	**848**
			575-46
74HC942			
	National	MM74HC942	3217-155
74HCT00			
	Motorola	MC74HCT00	583-79
	RCA	**CD74HCT00** ★	**842**
			583-99
	Signetics	**74HCT00** ★	**907**
			583-107
	Zytrex	ZX74HCT00	583-126
74HCT02			
	RCA	**CD74HCT02** ★	**842**
			585-59
	Signetics	**74HCT02** ★	**907**
			585-66
	Zytrex	ZX74HCT02	585-85
74HCT04			
	Fairchild	74HCT04	573-183
	Motorola	MC74HCT04	573-194
	RCA	**CD74HCT04** ★	**842**
			574-12
	Signetics	**74HCT04** ★	**907**
			574-21
	Zytrex	ZX74HCT04	574-37
74HCT05			
	Motorola	MC74HCT05	573-195
74HCT07			
	Fairchild	74HCT07	573-92
74HCT08			
	RCA	**CD74HCT08** ★	**842**
			582-140
	Signetics	**74HCT08** ★	**907**
			582-147
	Zytrex	ZX74HCT08	582-160
74HCT10			
	RCA	**CD74HCT10** ★	**842**
			583-45
	Signetics	**74HCT10** ★	**907**
			583-51
74HCT107			
	RCA	**CD74HCT107** ★	**842**
			581-187
	Signetics	**74HCT107** ★	**907**
			581-195
	Zytrex	ZX74HCT107	582-4
74HCT109			
	RCA	**CD74HCT109** ★	**842**
			582-37
	Signetics	**74HCT109** ★	**907**
			582-45
74HCT11			
	RCA	**CD74HCT11** ★	**842**
			582-99
	Signetics	**74HCT11** ★	**907**
			582-105
74HCT112			
	RCA	**CD74HCT112** ★	**842**
			581-161
	Signetics	**74HCT112** ★	**907**
			581-165
	Zytrex	ZY74HCT112	581-167
74HCT113			
	Zytrex	ZX74HCT113	581-151
74HCT123			
	RCA	**CD74HCT123** ★	**842**
			589-109
	Signetics	**74HCT123** ★	**907**
			589-113
74HCT132			
	RCA	**CD74HCT132** ★	**842**
			593-103
			(Continued)

¶ Indicates page number in Application Note Directory.
★ Indicates addition data is provided on the page noted.

Base Number	Source	Device	Page-Line
74HCT132			
	Signetics	**74HCT132** ★	**907**
			593-109
74HCT137			
	Supertex	74HCT137	579-12
74HCT138			
	Mitel	**MD74HCT138R** ★	**3048**
			578-151
	Motorola	MC74HCT138	578-156
	RCA	**CD74HCT138** ★	**842**
			578-166
	SPI	**SP74HCT138** ★	**844**
			578-170
	Signetics	**74HCT138** ★	**907**
			578-174
	Supertex	74HCT138	578-178
	Zytrex	ZX74HCT138	578-188
74HCT139			
	Mitel	**MD74HCT139R** ★	**3049**
			578-109
	RCA	**CD74HCT139** ★	**842**
			578-120
	SPI	**SP74HCT139** ★	**844**
			578-123
	Signetics	**74HCT139** ★	**907**
			578-126
	Supertex	74HCT139	578-129
	Zytrex	ZX74HCT139	578-139
74HCT14			
	RCA	**CD74HCT14** ★	**842**
			593-143
	Signetics	**74HCT14** ★	**907**
			593-149
74HCT147			
	RCA	**CD74HCT147** ★	**842**
			579-97
	Signetics	**74HCT147** ★	**907**
			579-101
74HCT151			
	RCA	**CD74HCT151** ★	**842**
			588-175
	Signetics	**74HCT151** ★	**907**
			588-179
74HCT153			
	RCA	**CD74HCT153** ★	**842**
			588-80
	Signetics	**74HCT153** ★	**907**
			589-22
74HCT154			
	RCA	**CD74HCT154** ★	**842**
			579-84
	Signetics	**74HCT154** ★	**907**
			579-88
74HCT157			
	RCA	**CD74HCT157** ★	**842**
			588-93
	Signetics	**74HCT157** ★	**907**
			588-97
	Zytrex	ZX74HCT157	588-103
74HCT158			
	RCA	**CD74HCT158** ★	**842**
			588-110
	Signetics	**74HCT158** ★	**907**
			588-115
	Zytrex	ZX74HCT158	588-122
74HCT160			
	RCA	**CD74HCT160** ★	**842**
			576-115
	Signetics	**74HCT160** ★	**907**
			588-116
	Zytrex	ZX74HCT160	576-130
74HCT161			
	RCA	**CD74HCT161** ★	**842**
			574-99
	Signetics	**74HCT161** ★	**907**
			574-105
	Zytrex	ZX74HCT161	574-114
74HCT162			
	RCA	**CD74HCT162** ★	**842**
			576-74
	Signetics	**74HCT162** ★	**907**
			576-80
	Zytrex	ZX74HCT162	576-91
74HCT163			
	RCA	**CD74HCT163** ★	**842**
			574-63
	Signetics	**74HCT163** ★	**907**
			(Continued)

Base Number	Source	Device	Page-Line
74HCT163			
	Signetics	**74HCT163**	**574-69**
	Zytrex	ZX74HCT163	574-78
74HCT164			
	RCA	**CD74HCT164** ★	**842**
			591-107
	Signetics	**74HCT164** ★	**907**
			591-110
	Zytrex	ZX74HCT164	591-116
74HCT165			
	RCA	**CD74HCT165** ★	**842**
			591-80
	Signetics	**74HCT165** ★	**907**
			591-84
	Zytrex	ZX74HCT165	591-91
74HCT166			
	RCA	**CD74HCT166** ★	**842**
	Signetics	**74HCT166** ★	**907**
			591-85
74HCT173			
	RCA	**CD74HCT173** ★	**842**
			580-108
	Signetics	**74HCT173** ★	**907**
			580-114
74HCT174			
	RCA	**CD74HCT174** ★	**842**
			580-172
	Signetics	**74HCT174** ★	**907**
			580-179
74HCT175			
	RCA	**CD74HCT175** ★	**842**
			580-144
	Signetics	**74HCT175** ★	**907**
			580-147
74HCT190			
	RCA	**CD74HCT190** ★	**842**
			577-16
	Signetics	**74HCT190** ★	**907**
			576-183
74HCT191			
	RCA	**CD74HCT191** ★	**842**
			574-152
	Signetics	**74HCT191** ★	**907**
			574-160
74HCT192			
	RCA	**CD74HCT192** ★	**842**
			576-159
	Signetics	**74HCT192** ★	**907**
			576-167
74HCT193			
	RCA	**CD74HCT193** ★	**842**
			574-153
	Signetics	**74HCT193** ★	**907**
			574-161
74HCT194			
	RCA	**CD74HCT194** ★	**842**
			590-109
	Signetics	**74HCT194** ★	**907**
			590-114
74HCT195			
	RCA	**CD74HCT195** ★	**842**
			590-140
	Signetics	**74HCT195** ★	**907**
			590-143
74HCT20			
	RCA	**CD74HCT20** ★	**842**
			582-195
	Signetics	**74HCT20** ★	**907**
			583-2
74HCT210			
	Zytrex	ZX74HCT210	594-40
74HCT221			
	RCA	**CD74HCT221** ★	**842**
			589-150
	Signetics	**74HCT221** ★	**907**
			589-156
74HCT237			
	Supertex	74HCT237	579-13
74HCT238			
	RCA	**CD74HCT238** ★	**842**
	Signetics	**74HCT238** ★	**907**
			578-175
	Supertex	74HCT238	578-179
	Zytrex	ZX74HCT238	578-169
74HCT239			
	Supertex	74HCT239	578-130
	Zytrex	ZX74HCT239	578-140

Base Number	Source	Device	Page-Line
74HCT240			
	Mitel	**MD74HCT240** ★	**3050**
			594-9
	Motorola	MC74HCT240	594-14
	RCA	**CD74HCT240** ★	**842**
			594-23
	SPI	**SP74HCT240** ★	**844**
			594-27
	Signetics	**74HCT240** ★	**907**
			594-30
	Supertex	74HCT240	594-33
	Toshiba	TC74HCT240	594-37
	Zytrex	ZX74HCT240	594-41
74HCT241			
	Mitel	**MD74HCT241R** ★	**3051**
			594-47
	Motorola	MC74HCT241	594-52
	RCA	**CD74HCT241** ★	**842**
			594-59
	SPI	**SP74HCT241** ★	**844**
			594-63
	Signetics	**74HCT241** ★	**907**
			594-66
	Supertex	74HCT241	594-68
	Zytrex	ZX74HCT241	594-73
74HCT242			
	RCA	**CD74HCT242** ★	**842**
			593-68
	Signetics	**74HCT242** ★	**907**
			593-72
	Supertex	74HCT242	593-76
74HCT243			
	RCA	**CD74HCT243** ★	**842**
			593-69
	Signetics	**74HCT243** ★	**907**
			593-73
	Supertex	74HCT243	593-77
74HCT244			
	Mitel	**MD74HCT244R** ★	**3052**
			593-163
	Motorola	MC74HCT244	593-168
	RCA	**CD74HCT244** ★	**842**
			593-177
	SPI	**SP74HCT244** ★	**844**
			593-180
	Signetics	**74HCT244** ★	**907**
			593-183
	Supertex	74HCT244	593-186
	Toshiba	TC74HCT244	594-1
	Zytrex	ZX74HCT244	594-3
74HCT245			
	Mitel	**MD74HCT245R** ★	**3053**
			594-137
	Motorola	MC74HCT245	594-142
	RCA	**CD74HCT245** ★	**842**
			594-147
	SPI	**SP74HCT245** ★	**844**
			594-150
	Signetics	**74HCT245** ★	**907**
			594-153
	Supertex	74HCT245	594-156
	Zytrex	ZX74HCT245	594-165
74HCT251			
	RCA	**CD74HCT251** ★	**842**
			589-45
	Signetics	**74HCT251** ★	**907**
			589-23
74HCT253			
	RCA	**CD74HCT253** ★	**842**
			588-72
	Signetics	**74HCT253** ★	**907**
			588-49
74HCT257			
	RCA	**CD74HCT257** ★	**842**
			588-134
	Signetics	**74HCT257** ★	**907**
			588-140
	Zytrex	ZX74HCT257	588-143
74HCT258			
	Zytrex	ZX74HCT258	588-148
74HCT259			
	RCA	**CD74HCT259** ★	**842**
			587-68
	Signetics	**74HCT259** ★	**907**
			587-72
	Zytrex	ZX74HCT259	587-83

Base Number	Source	Device	Page-Line
74HCT27			
	RCA	**CD74HCT27** ★	**842**
			585-11
	Signetics	**74HCT27** ★	**907**
			585-17
74HCT273			
	RCA	**CD74HCT273** ★	**842**
			581-6
	Signetics	**74HCT273** ★	**907**
			581-10
	Zytrex	ZX74HCT273	581-16
74HCT280			
	RCA	**CD74HCT280** ★	**842**
			572-1
	Signetics	**74HCT280** ★	**907**
			572-5
74HCT297			
	RCA	**CD74HCT297** ★	**842**
			592-74
			592-115
	RCA	CD74HCT297	3214-45
	Signetics	**74HCT297** ★	**907**
			592-76
	Signetics	74HCT297	3214-46
74HCT299			
	RCA	**CD74HCT299** ★	**842**
			591-156
	Signetics	**74HCT299** ★	**907**
			591-158
74HCT32			
	RCA	**CD74HCT32** ★	**842**
			584-99
	Signetics	**74HCT32** ★	**907**
			584-106
	Zytrex	ZX74HCT32	584-119
74HCT34			
	Motorola	MC74HCT34	573-196
74HCT354			
	RCA	**CD74HCT354** ★	**842**
			589-46
	Signetics	**74HCT354** ★	**907**
			589-52
74HCT356			
	RCA	**CD74HCT356** ★	**842**
			589-47
	Signetics	**74HCT356** ★	**907**
			589-53
74HCT365			
	RCA	**CD74HCT365** ★	**842**
			573-67
	Signetics	**74HCT365** ★	**907**
			573-74
	Zytrex	ZX74HCT365	573-87
74HCT366			
	RCA	**CD74HCT366** ★	**842**
			573-17
	Signetics	**74HCT366** ★	**908**
			573-21
	Zytrex	ZX74HCT366	573-31
74HCT367			
	RCA	**CD74HCT367** ★	**842**
			573-68
	Signetics	**74HCT367** ★	**908**
			573-75
	Zytrex	ZX74HCT367	573-88
74HCT368			
	RCA	**CD74HCT368** ★	**842**
			573-18
	Signetics	**74HCT368** ★	**908**
			573-22
	Zytrex	ZX74HCT368	573-32
74HCT373			
	Mitel	MC74HCT373R	
			586-129
	Mitel	**MD74HCT373R** ★	**3054**
			586-134
	Motorola	MC74HCT373	586-142
	RCA	**CD74HCT373** ★	**842**
			586-155
	SPI	**SP74HCT373** ★	**844**
			586-163
	Signetics	**74HCT373** ★	**908**
			586-169
	Supertex	74HCT373	586-174
	Zytrex	ZX74HCT373	586-186

Arranged alphanumerically from left to right.

© IC MASTER 1984

Base Number	Source	Device	Page-Line
74HCT374			
	Mitel	**MD74HCT374R** ★	**3055**
			581-76
	Motorola	MC74HCT374	581-85
	RCA	**CD74HCT374** ★	**842**
			581-101
	SPI	**SP74HCT374** ★	**844**
			581-109
	Signetics	**74HCT374** ★	**908**
			581-115
	Supertex	74HCT374	581-120
	Zytrex	ZX74HCT374	581-134
74HCT377			
	RCA	**CD74HCT377** ★	**842**
			581-24
	Signetics	**74HCT377** ★	**908**
			581-26
74HCT384			
	RCA	CD74HCT384	571-148
	Signetics	**74HCT384** ★	**908**
			571-150
74HCT390			
	RCA	CD74HCT390	577-57
	Signetics	**74HCT390** ★	**908**
			577-59
74HCT393			
	RCA	CD74HCT393	575-34
	Signetics	**74HCT393** ★	**908**
			575-38
74HCT4002			
	RCA	CD74HCT4002	584-164
	Signetics	**74HCT4002** ★	**908**
			584-169
74HCT40102			
	RCA	CD74HCT40102	
			576-189
74HCT40103			
	RCA	CD74HCT40103	
			575-81
	Signetics	**74HCT40103** ★	**908**
			575-83
74HCT40104			
	RCA	CD74HCT40104	
			590-122
	Signetics	74HCT40104	590-124
74HCT40105			
	RCA	CD74HCT40105	
			587-90
	Signetics	**74HCT40105** ★	**908**
			587-92
74HCT4015			
	RCA	CD74HCT4015	590-65
	Signetics	**74HCT4015** ★	**908**
			590-69
74HCT4016			
	Signetics	**74HCT4016** ★	**908**
74HCT4017			
	RCA	CD74HCT4017	576-34
	Signetics	**74HCT4017** ★	**908**
			576-40
74HCT4020			
	RCA	CD74HCT4020	575-143
	Signetics	**74HCT4020** ★	**908**
			575-149
74HCT4024			
	RCA	CD74HCT4024	575-65
	Signetics	**74HCT4024** ★	**908**
			575-69
74HCT4040			
	RCA	CD74HCT4040	575-108
	Signetics	**74HCT4040** ★	**908**
			575-113
74HCT4046			
	RCA	CD74HCT4046	592-101
	Signetics	**74HCT4046** ★	**908**
			592-105
	Signetics	74HCT4046	3214-47
74HCT4049			
	Signetics	**74HCT4049** ★	**908**
			572-108
74HCT4050			
	Signetics	**74HCT4050** ★	**908**
			572-153
74HCT4051			
	Signetics	**74HCT4051** ★	**908**
			595-20
74HCT4052			
	Signetics	**74HCT4052** ★	**908**
			593-40
74HCT4053			
	Signetics	**74HCT4053** ★	**908**
			593-45
74HCT4060			
	RCA	CD74HCT4060	575-172
	Signetics	**74HCT4060** ★	**908**
			575-176
74HCT4066			
	Signetics	**74HCT4066** ★	**908**
74HCT4067			
	Signetics	**74HCT4067** ★	**908**
74HCT4075			
	RCA	CD74HCT4075	584-64
	Signetics	**74HCT4075** ★	**908**
			584-68
74HCT4094			
	RCA	CD74HCT4094	591-57
	Signetics	**74HCT4094** ★	**908**
			591-61
74HCT42			
	RCA	**CD74HCT42** ★	**842**
			578-49
	Signetics	**74HCT42** ★	**907**
			578-55
74HCT423			
	RCA	CD74HCT423	589-151
	Signetics	**74HCT423** ★	**908**
			589-157
74HCT4511			
	RCA	CD74HCT4511	580-13
	Signetics	**74HCT4511** ★	**908**
			580-17
74HCT4514			
	RCA	CD74HCT4514	579-46
	Signetics	**74HCT4514** ★	**908**
			579-54
74HCT4515			
	RCA	CD74HCT4515	579-47
	Signetics	**74HCT4515** ★	**908**
			579-55
74HCT4518			
	RCA	CD74HCT4518	577-34
	Signetics	**74HCT4518** ★	**908**
			577-38
74HCT4520			
	RCA	CD74HCT4520	575-44
	Signetics	**74HCT4520** ★	**908**
			575-16
74HCT4538			
	RCA	CD74HCT4538	589-152
	Signetics	**74HCT4538** ★	**908**
			589-158
74HCT4543			
	RCA	CD74HCT4543	579-140
	Signetics	**74HCT4543** ★	**908**
			579-142
74HCT502			
	SPI	**SP74HCT502** ★	**844**
			592-138
74HCT503			
	SPI	**SP74HCT503** ★	**844**
			592-139
74HCT504			
	SPI	SP74HCT504	592-137
74HCT533			
	Motorola	MC74HCT533	586-198
	RCA	CD74HCT533	587-13
	Signetics	**74HCT533** ★	**908**
			587-19
	Supertex	74HCT533	587-23
	Zytrex	ZX74HCT533	587-34
74HCT534			
	Motorola	MC74HCT534	581-36
	RCA	CD74HCT534	581-47
	Signetics	**74HCT534** ★	**908**
			581-52
	Supertex	74HCT534	581-56
	Zytrex	ZX74HCT534	581-65
74HCT540			
	Mitel	**MD74HCT540R** ★	**3056**
			573-99
	Motorola	MC74HCT540	573-109
	RCA	CD74HCT540	573-117
	SPI	**SP74HCT540** ★	**844**
			(Continued)
74HCT540			
	SPI	**SP74HCT540**	**573-123**
	Signetics	**74HCT540** ★	**908**
			573-129
	Supertex	74HCT540	573-132
	Zytrex	ZX74HCT540	573-138
74HCT541			
	Mitel	**MD74HCT541R** ★	**3057**
			573-100
	Motorola	MC74HCT541	573-110
	RCA	CD74HCT541	573-118
	SPI	**SP74HCT541** ★	**844**
			573-124
	Signetics	**74HCT541** ★	**908**
			573-130
	Supertex	74HCT541	573-133
	Zytrex	ZX74HCT541	573-139
74HCT56			
	Supertex	74HCT56	581-57
74HCT563			
	RCA	CD74HCT563	587-14
	Signetics	**74HCT563** ★	**908**
			587-20
	Supertex	74HCT563	587-24
	Zytrex	ZX74HCT563	587-35
74HCT564			
	RCA	CD74HCT564	581-48
	Signetics	**74HCT564** ★	**908**
			581-53
	Zytrex	ZX74HCT564	581-66
74HCT573			
	Mitel	**MD74HCT573R** ★	**3058**
			586-135
	RCA	CD74HCT573	586-156
	SPI	**SP74HCT573** ★	**844**
			586-164
	Signetics	**74HCT573** ★	**908**
			586-170
	Supertex	74HCT573	586-175
	Toshiba	TC74HCT573	586-183
	Zytrex	ZX74HCT573	586-187
74HCT574			
	Mitel	**MD74HCT574R** ★	**3059**
			581-77
	RCA	CD74HCT574	581-102
	SPI	**SP74HCT574** ★	**844**
			581-110
	Signetics	**74HCT574** ★	**908**
			581-116
	Supertex	74HCT574	581-121
	Toshiba	TC74HCT574	581-131
	Zytrex	ZX74HCT574	581-135
74HCT640			
	Motorola	MC74HCT640	594-114
	RCA	CD74HCT640	594-122
	Signetics	**74HCT640** ★	**908**
			594-126
	Zytrex	ZX74HCT640	594-130
74HCT643			
	Motorola	MC74HCT643	594-115
	RCA	CD74HCT643	594-123
	Signetics	**74HCT643** ★	**908**
			594-127
	Zytrex	ZX74HCT643	594-131
74HCT645			
	RCA	CD74HCT645	594-148
74HCT646			
	RCA	CD74HCT646	594-97
	Signetics	**74HCT646** ★	**908**
			594-99
74HCT648			
	RCA	CD74HCT648	594-83
	Signetics	**74HCT648** ★	**908**
			594-85
74HCT670			
	RCA	CD74HCT670	587-109
	SPI	**SP74HCT670** ★	**844**
			587-110
	Signetics	**74HCT670** ★	**908**
			587-113
74HCT688			
	Motorola	MC74HCT688	571-64
	RCA	CD74HCT688	571-68
	Signetics	**74HCT688** ★	**908**
			571-70
74HCT73			
	RCA	**CD74HCT73** ★	**842**
			581-188
	Signetics	**74HCT73** ★	**907**
			581-196
	Zytrex	ZX74HCT73	582-5
74HCT74			
	RCA	**CD74HCT74** ★	**842**
			580-66
	Signetics	**74HCT74** ★	**907**
			580-73
	Zytrex	ZX74HCT74	580-88
74HCT75			
	RCA	**CD74HCT75** ★	**842**
			586-66
	Signetics	**74HCT75** ★	**907**
			586-72
74HCT76			
	Zytrex	ZX74HCT76	582-63
74HCT85			
	RCA	**CD74HCT85** ★	**842**
			571-124
	Signetics	**74HCT85** ★	**907**
			571-129
74HCT86			
	RCA	**CD74HCT86** ★	**842**
			585-143
	Signetics	**74HCT86** ★	**907**
			585-151
74HCU04			
	Motorola	MC74HCU04	573-169
	National	MM74HCU04	573-171
	RCA	CD74HCU04	574-13
	Signetics	**74HCU04** ★	**907**
			573-172
	Toshiba	TC74HCU04	573-173
74L164	National	DM74L164A	3790-78
	TI	SN74L164	3790-80
74L47	TI	SN74L47	2662-17
74L91	National	DM74L91	3790-112
	TI	SN74L91	3790-110
74L95	National	DM74L95	3788-47
	TI	SN74L95	3788-42
74L99	TI	SN74L99	3788-43
74LS00	Fairchild	74LS00	621-191
	Hitachi	HD74LS00	621-192
	Mitsubishi	M74LS00	621-193
	Motorola	SN74LS00	621-195
	National	DM74LS00	621-197
	Panasonic	**DN74LS00** ★	**826**
		★	**834**
			622-1
	SGS	74LS00	622-3
	Signetics	74LS00	622-5
	TI	**SN74LS00** ★	**920**
			622-7
74LS01	Hitachi	HD74LS01	621-118
	Motorola	SN74LS01	621-123
	National	DM74LS01	621-127
	Panasonic	**DN74LS01** ★	**826**
		★	**834**
			621-129
	Signetics	74LS01	621-135
	TI	**SN74LS01** ★	**920**
			621-138
74LS02	Fairchild	74LS02	624-84
	Hitachi	HD74LS02	624-86
	Mitsubishi	M74LS02	624-87
	Motorola	SN74LS02	624-90
	National	DM74LS02	624-93
	Panasonic	**DN74LS02** ★	**826**
		★	**834**
			624-94
	SGS	74LS02	624-97
	Signetics	74LS02	624-102
	TI	**SN74LS02** ★	**920**
			624-105
74LS03	Fairchild	74LS03	621-117
	Hitachi	HD74LS03	621-119
	Mitsubishi	M74LS03	621-120
	Motorola	SN74LS03	621-124
	National	DM74LS03	621-128
	Panasonic	**DN74LS03** ★	**826**
		★	**834**
			621-130
	SGS	74LS03	621-132
			(Continued)

¶ Indicates page number in Application Note Directory.
★ Indicates addition data is provided on the page noted.

IC MASTER BELONGS ON YOUR BOOKSHELF

If you use IC MASTER frequently, you can obtain your own copy by ordering now. Use the order cards contained in this publication, or order by telephone as described below.

IC MASTER is a two-volume set of technical data carefully organized to direct the engineer to the integrated circuits and related products that are closest to his specific needs. It is the surest way to find the optimum device to answer an engineering design requirement. By ordering now, you won't have to borrow or search for IC MASTER the next time you need it.

Typical Use of IC MASTER

Can an engineer find out who makes a 64K dynamic RAM with an access time of 120 nanoseconds or faster in less than 30 seconds?
He can if he turns to the Memory section of IC MASTER and looks for the 64K organization (words and bits per word) that he needs.
Because each device is listed in order of access time, he can easily determine the devices that satisfy his speed requirements.

In the United States only:

You can order IC MASTER simply by charging it to your VISA or Master Card credit card. To place your order, call now: (516) 222-2500.
Ask for Extension 314.

ORDER YOUR COPY NOW

ABBREVIATIONS OF COMPANY NAMES

Action Ins	Action Instruments
AD	Analog Devices
ADT	Advanced Digital Technology
Advent	Advent Products, Inc.
Alphatron	Alphatron
AMA	American Automation
AMD	Advanced Micro Devices
AMI	American Microsystems, Inc.
Amperex	Amperex Electronic Corp.
Analogic	Analogic
Analog Sys	Analog Systems
APC	Applied Micro Circuits
Apex	Apex Microtechnology
APM	Applied Microsystems Corp.
Appl Sys	Applied Systems Corp.
APT	Applied Microtechnology
Aptek	Aptek Microsystems
Array Tech	Array Technology
AWI	AWI Electronics
Barvon	Barvon Research
Bedford	Bedford Computer Systems Inc.
Burr-Brown	Burr-Brown
CAE	Computer Aided Engineering
Cal Devices	California Devices
Cermetek	Cermetek
CGRS	CGRS Microtech Inc.
Cherry	Cherry Semiconductor
CIC	Custom Integrated Circuits
CirTech	Circuit Technology
Citel	Citel
Comlinear	Comlinear Corporation
CMA	Custom MOS Arrays
Comark	Comark Corp.
Comdial	Comdial Semiconductor
Comp Auto	Computer Automation
Compas	Compas Microsystems
Cont Logic	Control Logic Inc.
Control Sys	Control Systems Microsystems Div.
CreMicro	Creative Micro Systems
Cromemco	Cromemco, Inc.
Cubit	Cubit Inc.
Curtis	Curtis Electro Devices, Inc.
Cybernetic	Cybernetic Micro Systems
Cybersys	Cybersystems
Cybertek	Cybertek Inc.
Data General	Data General
Data I/O	Data I/O
Data Trans	Data Translation
Datel	Datel
Datricon	Datricon Corporation
DDC	Data Devices Corporation
DEC	Digital Equipment Corporation
Die-Tech	Die-Tech
Digelec	Digelec Corp.
Digitek	Digitek, Inc.
Dionics	Dionics Inc.
Dist Comp	Distributed Computer Systems
Divers Tech	Diversified Technology
E-HI	E-H International, Inc.
EDI	Electronic Designs Inc.
Elind	Elind Elettronica Industriale
EMM-SESCO	EEM-SESCO
Emulogic	Emulogic Inc.
ETI Micro	ETI Micro
Exar	Exar Integrated Systems
Exel	Exel Microelectronics
Fairchild	Fairchild
Ferranti	Ferranti Electric
Force	Force Computers
Fujitsu A	Fujitsu America
Fujitsu	Fujitsu Microelectronics, Inc.
GI	General Instrument
GTE Micro	GTE Microcircuits
Harris	Harris Semiconductor
Heurikon	Heurikon Corp.
Hilevel	Hilevel Technology, Inc.
Hitachi	Hitachi America, Ltd.
Holt	Holt Inc.
HP	Hewlett-Packard
Hughes	Hughes Aircraft, Solid State Products
Hybrid Sys	Hybrid Systems
HyComp	HyComp
ICC	International Cybernetics
IDT	Integrated Device Technology
IMI	International Microcircuits, Inc.
IMP	International Microelectronic Products
IMS	Industrial MicroSystems Inc.
Infosphere	Infosphere
Inmos	Inmos
IntCirEng	Integrated Circuit Engineering
IntCirSys	Integrated Circuit Systems
IntCompSys	Integrated Computer Systems
Int Tech	Integrated Technology Corp.
Intech	Intech Microcircuits Div.
Intel	Intel
Interdesign	Interdesign
Intersil	Intersil
Intronics	Intronics
ITT	ITT Semiconductors
Kinetic Sys	Kinetic Systems
Kontron	Kontron Electronics
Lambda	Lambda Semiconductor
Linear Tech	Linear Technology
LSI Comp	LSI Computer Systems
LSI Logic	LSI Logic Corporation
Master Logic	Master Logic Corporation
Matrix	Matrix Corp.
Matrox	Matrox Electronic Systems
Maxim	Maxim Integrated Products
MCC	Micro-Computer Control
MCE	MCE Electronics
Micrel	Micrel
Micro Innov	Micro Innovators
Micropac	Micropac Industries
Micro Net	Micro Networks
Micro Pwr	Micro Power Systems
Micro Sci	Micro Sciences Corp.
Micro Tech	Microcircuits Technology
Micro-Link	Micro-Link Corporation
Micron	Micron Technology
MilerTron	MilerTronics
Miller	Miller Technology
Mitel	Mitel Semiconductor
Mitsubishi	Mitsubishi Electronics
MMI	Monolithic Memories, Inc.
Mostek	Monolithic Systems Corp.
Motorola	Mostek
MRC	Motorola Semiconductor
Murray	MRC Systems
Monosil	Murray Consulting
National	National Semiconductor
NCM	NCM Corp.
NCR	NCR Corp., Microelectronics Division
NEC	NEC Electronics
Nitron	Nitron
OAE	Oliver Advanced Engineering
Octagon	Octagon Systems Corp.
OEI	Optical Electronics Inc.
Ohio Sci	Ohio Scientic
OKI	OKI Semiconductor
Omnibyte	Omnibyte Corp.
Onset	Onset Computer Corp.
Panasonic	Panasonic
Pico Design	Pico Design
Polycore	Polycore Electronics
Plessey	Plessey Semiconductors
PMI	Precision Monilithics, Inc.
PragDes	Pragmatic Design Inc.
Pro-Log	Pro-Log Corp.
Quay	Quay Corp.
Raytheon	Raytheon Semiconductor
RCA	RCA Solid State Division
RCI Data	RCI Data
RELMS	Relational Memory Systems
Reticon	Reticon
RIFA	RIFA
Rockwell	Rockwell, Microelectronic Devices
RTC	Riehl Time Corporation
Sanyo	Sanyo
SBE	SBE, Inc.
SEEQ	SEEQ Technology, Inc.
SPI	Semi Processes Inc.
Siemens	Siemens
Si-Fab	Si-Fab
Signetics	Signetics
SGS	SGS Semiconductor
Sharp	Sharp
Silicon G	Silicon General
Siliconix	Siliconix
Silicon Sys	Silicon Systems Inc.
Siltronics	Siltronics
SMC	Standard Microsystems Corp.
S MOS	S MOS Systems
Solarise	Solarise Enterprises
Solitron	Solitron Devices
Sprague	Sprague Electric Company
SSM	Solid State Micro Technology for Music
SSS	Solid State Scientific
Stag	Stag Microsystems
STC	Storage Technology Corp.
STD	STD Microsystems
Struc Des	Structured Design Inc.
Stynetic	Stynetic Systems
Sunrise	Sunrise Electronics
Sunshine	Sunshine Semiconductor
Supertex	Supertex Inc.
Symtek	Symtek Corp.
Synertek	Synertek
Sys Innov	Systems Innovations
Tau Zero	Tau Zero Inc.
Technitrol	Technitrol
Tektronix	Tektronix
Teledyne C	Teledyne Crystalonics
Teledyne P	Teledyne Philbrick
Teledyne S	Teledyne Semiconductor
Telefunken	Telefunken
Telmos	Telmos
Teltone	Teltone Corporation
TI	Texas Instruments
Third Domain	Third Domain
Thomson-CSF	Thomson-CSF Components Corp.
Toshiba	Toshiba America
Trans-Data	Trans-Data
TRW	TRW LSI Products
Unitrode	Unitrode
Universal	Universal Semiconductor, Inc.
Varix	Varix Corp.
VLSI Design	VLSI Design Associates
VTI	VLSI Technology, Inc.
Votrax	Votrax
Weitek	Weitek Corporation
Western	Western Digital
Wintek	Wintek Corp.
Xicor	Xicor, Inc.
Xycom	Xycom
Zendex	Zendex Corp.
Zilog	Zilog
ZyMOS	ZyMOS Corporation
Zytrex	Zytrex Corp.

Base Number	Source	Device	Page-Line
74LS03	TI	**SN74LS03**	★ **921**
			621-139
74LS04	Fairchild	74LS04	607-82
	Hitachi	HD74LS04	607-83
	Mitsubishi	M74LS04	607-84
	Motorola	SN74LS04	607-86
	National	DM74LS04	607-88
	Panasonic	**DN74LS04**	★ **826**
			★ **834**
			607-89
	SGS	74LS04	607-91
	Signetics	74LS04	607-93
	TI	**SN74LS04**	★ **921**
			607-95
74LS05	Fairchild	74LS05	606-143
	Hitachi	HD74LS05	606-144
	Mitsubishi	M74LS05	606-145
	Motorola	SN74LS05	606-147
	National	DM74LS05	606-149
	Panasonic	**DN74LS05**	★ **826**
			★ **834**
			606-150
	SGS	74LS05	606-152
	Signetics	74LS05	606-154
	TI	**SN74LS05**	★ **921**
			606-156
74LS08	Fairchild	74LS08	619-120
	Hitachi	HD74LS08	619-121
	Mitsubishi	M74LS08	619-122
	Motorola	SN74LS08	619-124
	National	DM74LS08	619-126
	Panasonic	**DN74LS08**	★ **826**
			★ **834**
			619-127
	SGS	74LS08	619-129
	Signetics	74LS08	619-131
	TI	**SN74LS08**	★ **922**
			619-133
74LS09	Fairchild	74LS09	619-60
	Hitachi	HD74LS09	619-61
	Mitsubishi	M74LS09	619-62
	Motorola	SN74LS09	619-64
	National	DM74LS09	619-66
	Panasonic	**DN74LS09**	★ **826**
			★ **834**
			619-68
	SGS	74LS09	619-70
	Signetics	74LS09	619-72
	TI	**SN74LS09**	★ **923**
			619-74
74LS10	Fairchild	74LS10	620-155
	Hitachi	HD74LS10	620-156
	Mitsubishi	M74LS10	620-157
	Motorola	SN74LS10	620-159
	National	DM74LS10	620-161
	Panasonic	**DN74LS10**	★ **826**
			★ **834**
			620-162
	SGS	74LS10	620-164
	Signetics	74LS10	620-166
	TI	**SN74LS10**	★ **923**
			620-168
74LS104			
	TI	SN74LS104	636-144
74LS105			
	TI	SN74LS105	636-145
74LS107			
	Fairchild	74LS107	617-130
	Hitachi	HD74LS107	617-131
	Mitsubishi	M74LS107A	617-133
	Motorola	SN74LS107A	617-137
	National	DM74LS107A	617-141
	Panasonic	**DN74LS107**	★ **826**
			★ **834**
			617-143
	Signetics	74LS107	617-147
	TI	**SN74LS107A**	★ **957**
			617-151
74LS109			
	Fairchild	74LS109	617-65
	Hitachi	HD74LS109	617-66
	Mitsubishi	M74LS109A	617-67
	Motorola	SN74LS109A	617-69
	National	DM74LS109	617-71
	Panasonic	**DN74LS109**	★ **826**
			★ **834**
			(Continued)

Base Number	Source	Device	Page-Line
74LS109			
	Panasonic	**DN74LS109**	**617-72**
	SGS	74LS109	617-74
	Signetics	74LS109A	617-76
	TI	**SN74LS109A**	★ **958**
			617-78
74LS11	Fairchild	74LS11	619-20
	Hitachi	HD74LS11	618-177
	Mitsubishi	M74LS11	619-21
	Motorola	SN74LS11	619-23
	National	DM74LS11	619-25
	Panasonic	**DN74LS11**	★ **826**
			★ **834**
			619-26
	SGS	74LS11	619-28
	Signetics	74LS11	619-30
	TI	**SN74LS11**	★ **923**
			619-32
74LS112			
	Fairchild	74LS112	618-59
	Hitachi	HD74LS112	618-60
	Mitsubishi	M74LS112A	618-61
	Motorola	SN74LS112A	618-63
	National	DM74LS112	618-65
	Panasonic	**DN74LS112**	★ **826**
			★ **834**
			618-66
	SGS	74LS112	618-99
	Signetics	74LS112	618-68
	TI	**SN74LS112A**	★ **959**
			618-70
74LS113			
	Fairchild	74LS113	618-14
	Hitachi	HD74LS113	618-15
	Mitsubishi	M74LS113A	618-16
	Motorola	SN74LS113A	618-18
	National	DM74LS113A	618-20
	Panasonic	**DN74LS113**	★ **826**
			★ **834**
			618-21
	SGS	74LS113	618-23
	Signetics	74LS113	618-25
	TI	**SN74LS113A**	★ **959**
			618-27
74LS114			
	Fairchild	74LS114	618-90
	Hitachi	HD74LS114	618-91
	Mitsubishi	M74LS114A	618-92
	Motorola	SN74LS114A	618-94
	National	DM74LS114A	618-96
	Panasonic	**DN74LS114**	★ **826**
			★ **834**
			618-97
	SGS	T74LS114	618-101
	TI	**SN74LS114A**	★ **960**
			618-103
74LS12	Fairchild	74LS12	620-109
	Hitachi	HD74LS12	620-110
	Mitsubishi	M74LS12	620-111
	Motorola	SN74LS12	620-113
	National	DM74LS12	620-115
	Panasonic	**DN74LS12**	★ **826**
			★ **834**
			620-116
	TI	**SN74LS12**	★ **924**
			620-118
74LS122			
	Hitachi	HD74LS122	630-129
	Motorola	SN74LS122	630-131
	National	DM74LS122	630-133
	TI	**SN74LS122**	★ **961**
			630-135
74LS123			
	Hitachi	HD74LS123	630-172
	Motorola	SN74LS123	630-174
	National	DM74LS123	630-176
	Panasonic	**DN74LS123**	★ **826**
			★ **834**
			630-177
	TI	**SN74LS123**	★ **962**
			630-179
			¶ 259-9
74LS124			
	TI	SN74LS124	637-111
			3215-40

Base Number	Source	Device	Page-Line
74LS125			
	Fairchild	74LS125	606-1
	Mitsubishi	M74LS125A	606-2
	Motorola	SN74LS125A	606-4
	National	DM74LS125A	606-6
	Panasonic	**DN74LS125A**	★ **826**
			★ **834**
			606-7
	SGS	74LS125A	606-9
	Signetics	74LS125A	606-11
	TI	**SN74LS125A**	★ **962**
			606-13
74LS126			
	Fairchild	74LS126	605-149
	Mitsubishi	M74LS126A	605-150
	Motorola	SN74LS126A	605-152
	National	DM74LS126	605-154
	SGS	74LS126	605-156
	Signetics	74LS126A	605-158
	TI	**SN74LS126A**	★ **962**
			605-160
74LS13	Fairchild	74LS13	637-142
	Hitachi	HD74LS13	637-143
	Mitsubishi	M74LS13	637-144
	Motorola	SN74LS13	637-146
	National	DM74LS13	637-148
	Panasonic	**DN74LS13**	★ **826**
			★ **834**
			637-149
	SGS	T74LS13	637-153
	Signetics	74LS13	637-155
	TI	**SN74LS13**	★ **924**
			637-158
74LS132			
	Fairchild	74LS132	638-31
	Hitachi	HD74LS132	638-32
	Mitsubishi	M74LS132	638-33
	Motorola	SN74LS132	638-35
	National	DM74LS132	638-37
	Panasonic	**DN74LS132**	★ **826**
			★ **834**
			638-38
	SGS	74LS132	637-151
	Signetics	74LS132	638-41
	TI	**SN74LS132**	★ **965**
			638-44
74LS133			
	Fairchild	74LS133	622-74
	Mitsubishi	M74LS133	622-75
	Motorola	SN74LS133	622-77
	SGS	74LS133	622-79
74LS136			
	Fairchild	74LS136	624-135
	Hitachi	HD74LS136	624-136
	Mitsubishi	M74LS136	624-137
	Motorola	SN74LS136	624-139
	National	DM74LS136	624-141
	Panasonic	**DN74LS136**	★ **826**
			★ **834**
			624-142
	SGS	74LS136	624-144
	Signetics	74LS136	624-146
	TI	**SN74LS136**	★ **966**
			624-148
74LS137			
	Motorola	SN74LS137	613-95
	TI	**SN74LS137**	★ **967**
			613-97
74LS138			
	Fairchild	74LS138	613-58
	Hitachi	HD74LS138	613-59
	Mitsubishi	M74LS138	613-60
	Motorola	SN74LS138	613-62
	National	DM74LS138	613-64
			1345-112
	Panasonic	**DN74LS138**	★ **827**
			613-65
	SGS	74LS138	613-67
	Signetics	74LS138	613-69
	TI	**SN74LS138**	★ **968**
			613-71
	TI	SN74LS138	1345-114
74LS139			
	Fairchild	74LS139	612-139
	Hitachi	HD74LS139	612-140
	Motorola	SN74LS139	612-142
			(Continued)

Base Number	Source	Device	Page-Line
74LS139			
	National	DM74LS139	612-144
	Panasonic	**DN74LS139**	★ **827**
			612-145
	SGS	74LS139	612-147
	Signetics	74LS139	612-149
	TI	**SN74LS139**	★ **968**
			612-151
74LS14	Fairchild	74LS14	638-66
	Hitachi	HD74LS14	638-67
	Mitsubishi	M74LS14	638-68
	Motorola	SN74LS14	638-70
	National	DM74LS14	638-72
	Panasonic	**DN74LS14**	★ **826**
			★ **834**
			638-73
	SGS	74LS14	638-75
	Signetics	74LS14	638-77
	TI	**SN74LS14**	★ **924**
			638-80
74LS145			
	Fairchild	74LS145	612-59
	Hitachi	HD74LS145	612-60
	Motorola	SN74LS145	612-62
	Panasonic	**DN74LS145**	★ **827**
			612-63
	TI	**SN74LS145**	★ **970**
			612-65
74LS147			
	Motorola	SN74LS147	639-120
	TI	**SN74LS147**	★ **970**
			639-122
74LS148			
	Hitachi	HD74LS148	639-49
	Motorola	SN74LS148	639-52
	TI	**SN74LS148**	★ **971**
			639-56
	TI	SN74LS148	1350-9
74LS15	Fairchild	74LS15	618-155
	Hitachi	HD74LS15	618-156
	Mitsubishi	M74LS15	618-157
	Motorola	SN74LS15	618-159
	National	DM74LS15	618-161
	Panasonic	**DN74LS15**	★ **826**
			★ **834**
			618-162
	SGS	74LS15	618-165
	TI	**SN74LS15**	★ **925**
			618-167
74LS151			
	Fairchild	74LS151	629-169
	Hitachi	HD74LS151A	629-170
	Mitsubishi	M74LS151	629-171
	Motorola	SN74LS151	629-173
	National	DM74LS151	629-175
	Panasonic	**DN74LS151**	★ **827**
			629-176
	SGS	74LS151	629-178
	Signetics	74LS151	629-180
	TI	**SN74LS151**	★ **972**
			629-182
74LS152			
	Hitachi	HD74LS152	630-14
	SGS	T74LS152	630-16
	TI	**SN74LS152A**	★ **972**
			630-18
74LS153			
	Fairchild	74LS153	628-53
	Hitachi	HD74LS153	628-54
	Mitsubishi	M74LS153	628-55
	Motorola	SN74LS153	628-57
	National	DM74LS153	628-59
	Panasonic	**DN74LS153**	★ **827**
			628-60
	SGS	74LS153	628-62
	Signetics	74LS153	628-64
	TI	**SN74LS153**	★ **972**
			628-66
74LS154			
	Hitachi	HD74LS154	613-124
	National	DM74LS154	613-126
	Signetics	74LS154	613-128
74LS155			
	Fairchild	74LS155	613-22
	Hitachi	HD74LS155	613-23
	Motorola	SN74LS155	613-25
			(Continued)

Arranged alphanumerically from left to right.

© IC MASTER 1984

Base Number	Source	Device	Page-Line
74LS155			
	National	DM74LS155	613-27
	Panasonic	**DN74LS155**	★ **827**
			613-28
	SGS	74LS155	613-30
	Signetics	74LS155	613-32
	TI	**SN74LS155**	★ **974**
			613-34
74LS156			
	Fairchild	74LS156	612-174
	Hitachi	HD74LS156	612-175
	Motorola	SN74LS156	612-177
	National	DM74LS156	612-179
	Panasonic	**DN74LS156**	★ **827**
			612-180
	SGS	74LS156	612-182
	Signetics	74LS156	613-1
	TI	**SN74LS156**	★ **974**
			613-3
74LS157			
	Fairchild	74LS157	629-32
	Hitachi	HD74LS157	629-33
	Mitsubishi	M74LS157	629-34
	Motorola	SN74LS157	629-36
	National	DM74LS157	629-38
	Panasonic	**DN74LS157**	★ **827**
			629-39
	SGS	74LS157	629-41
	Signetics	74LS157	629-43
	TI	**SN74LS157**	★ **975**
			629-45
74LS158			
	Fairchild	74LS158	628-140
	Hitachi	HD74LS158	628-141
	Mitsubishi	M74LS158	628-142
	Motorola	SN74LS158	628-144
	National	DM74LS158	628-146
	Panasonic	**DN74LS158**	★ **827**
			628-147
	SGS	74LS158	628-149
	Signetics	74LS158	628-151
	TI	**SN74LS158**	★ **975**
			628-153
74LS160			
	Fairchild	74LS160	610-54
	Hitachi	HD74LS160A	610-55
	Motorola	SN74LS160A	610-57
	National	DM74LS160A	610-59
	Panasonic	**DN74LS160A**	★ **827**
			610-60
	SGS	74LS160	610-62
	Signetics	74LS160A	610-64
	TI	**SN74LS160A**	★ **977**
			610-66
74LS161			
	Fairchild	74LS161	608-22
	Hitachi	HD74LS161A	608-23
	Mitsubishi	M74LS161	607-185
	Motorola	SN74LS161A	608-25
	National	DM74LS161A	608-27
	Panasonic	**DN74LS161A**	★ **827**
			608-28
	SGS	74LS161	608-30
	Signetics	74LS161A	608-32
	TI	**SN74LS161A**	★ **977**
			608-34
74LS162			
	Fairchild	74LS162	610-102
	Hitachi	HD74LS162A	610-103
	Motorola	SN74LS162A	610-105
	National	DM74LS162	610-107
	Panasonic	**DN74LS162**	★ **827**
			610-108
	SGS	74LS162	610-110
	Signetics	74LS162A	610-112
	TI	**SN74LS162A**	★ **978**
			610-116
74LS163			
	Fairchild	74LS163	608-67
	Hitachi	HD74LS163A	608-68
	Mitsubishi	M74LS163	608-69
	Motorola	SN74LS163A	608-71
			¶ 274-4
	National	DM74LS163A	608-73
	Panasonic	**DN74LS163A**	★ **827**
			608-74
			(Continued)

Base Number	Source	Device	Page-Line
74LS163			
	SGS	74LS163	608-75
	Signetics	74LS163A	608-77
	TI	**SN74LS163A**	★ **978**
			608-78
74LS164			
	Fairchild	74LS164	632-41
			3790-84
	Hitachi	HD74LS164	632-42
			3790-88
	Mitsubishi	M74LS164	632-43
	Motorola	SN74LS164	632-45
			3790-90
	National	DM74LS164	632-47
			3790-94
	Panasonic	**DN74LS164**	★ **827**
			632-48
	SGS	74LS164	632-50
	Signetics	74LS164	632-53
			3790-100
	TI	**SN74LS164**	★ **979**
			632-55
	TI	SN74LS164	3790-104
74LS165			
	Fairchild	74LS165	632-89
			3790-39
	Mitsubishi	M74LS165	632-90
	Motorola	SN74LS165	632-92
			¶ 274-4
			3790-42
	TI	**SN74LS165**	★ **979**
			632-94
	TI	SN74LS165	3790-51
74LS166			
	Mitsubishi	M74LS166	632-108
	Motorola	SN74LS166	632-110
	National	DM74LS166	632-112
	TI	**SN74LS166**	★ **979**
			632-114
	TI	SN74LS166	3790-52
74LS168			
	Fairchild	74LS168	611-9
	Motorola	SN74LS168	611-13
	National	DM74LS168A	611-16
	SGS	T74LS168	611-18
	Signetics	74LS168A	611-20
74LS169			
	Fairchild	74LS169	609-9
	Motorola	SN74LS169	609-12
	National	DM74LS169A	609-14
	SGS	T74LS169	609-16
	Signetics	74LS169A	609-18
	TI	SN74LS169A	609-22
		SN74LS169B	609-23
74LS170			
	Fairchild	74LS170	627-15
			3770-26
	Hitachi	HD74LS170	627-16
		HM74LS170	3770-29
	Motorola	SN74LS170	627-18
			3770-30
	National	DM74LS170	627-20
			3770-34
	Panasonic	**DN74LS170**	★ **827**
			627-21
	SGS	74LS170	627-23
			3770-35
	Signetics	74LS170	627-24
			3770-37
	TI	**SN74LS170**	★ **981**
			627-26
	TI	SN74LS170	3770-41
74LS171			
	TI	**SN74LS171**	★ **981**
			615-95
74LS173			
	Fairchild	74LS173A	615-135
	Motorola	SN74LS173A	615-137
	National	DM74LS173	615-139
	Panasonic	**DN74LS173**	★ **827**
			615-140
	Signetics	74LS173	615-142
	TI	**SN74LS173A**	★ **982**
			615-144

Base Number	Source	Device	Page-Line
74LS174			
	Fairchild	74LS174	615-171
	Hitachi	HD74LS174	615-172
	Mitsubishi	M74LS174	615-173
	Motorola	SN74LS174	615-175
	National	DM74LS174	615-177
	Panasonic	**DN74LS174**	★ **827**
			615-178
	SGS	74LS174	615-180
	Signetics	74LS174	615-182
	TI	**SN74LS174**	★ **983**
			615-184
74LS175			
	Fairchild	74LS175	615-58
	Hitachi	HD74LS175	615-59
	Mitsubishi	M74LS175	615-60
	Motorola	SN74LS175	615-62
			¶ 274-4
	National	DM74LS175	615-64
			1348-3
	Panasonic	**DN74LS175**	★ **827**
			615-65
	SGS	74LS175	615-67
	Signetics	74LS175	615-69
	TI	**SN74LS175**	★ **983**
			615-71
74LS18	**TI**	**SN74LS18**	★ **926**
			637-159
74LS181			
	Fairchild	74LS181	604-48
	Hitachi	HD74LS181	604-49
	Motorola	SN74LS181	604-51
	SGS	74LS181	604-53
	Signetics	74LS181	604-55
	TI	**SN74LS181**	★ **985**
			604-59
74LS182			
	Motorola	SN74LS182	604-96
74LS183			
	Motorola	SN74LS183	604-1
	TI	**SN74LS183**	★ **986**
			604-3
74LS189			
	Fairchild	74LS189	3770-115
	TI	**SN74LS189A**	★ **988**
			3771-32
74LS19	**TI**	**SN74LS19**	★ **926**
			638-81
74LS190			
	Fairchild	74LS190	611-93
	Hitachi	HD74LS190	611-94
	Motorola	SN74LS190	611-96
	National	DM74LS190	611-98
	Panasonic	**DN74LS190**	★ **827**
			611-99
	SGS	74LS190	611-101
	TI	**SN74LS190**	★ **989**
			611-104
74LS191			
	Fairchild	74LS191	609-57
	Hitachi	HD74LS191	609-58
	Motorola	SN74LS191	609-60
	National	DM74LS191	609-62
	Panasonic	**DN74LS191**	★ **827**
			609-63
	SGS	74LS191	609-65
	Signetics	74LS191	609-67
	TI	**SN74LS191**	★ **989**
			609-69
74LS192			
	Fairchild	74LS192	611-58
	Hitachi	HD74LS192	611-59
	Motorola	SN74LS192	611-61
	National	DM74LS192	611-63
	Panasonic	**DN74LS192**	★ **827**
			611-64
	SGS	74LS192	611-66
	Signetics	74LS192	611-68
	TI	**SN74LS192**	★ **990**
			611-70
74LS193			
	Fairchild	74LS193	609-104
	Hitachi	HD74LS193	609-105
	Motorola	SN74LS193	609-107
	National	DM74LS193	609-109
	Panasonic	**DN74LS193**	★ **827**
			(Continued)

Base Number	Source	Device	Page-Line
74LS193			
	Panasonic	**DN74LS193**	**609-110**
	SGS	74LS193	609-112
	Signetics	74LS193	609-114
	TI	**SN74LS193**	★ **990**
			609-116
74LS194			
	Fairchild	74LS194A	3788-107
	Hitachi	HD74LS194A	631-170
			3788-75
	Mitsubishi	M74LS194A	631-171
	Motorola	SN74LS194A	631-173
			3788-122
	National	DM74LS194A	631-175
	Panasonic	**DN74LS194A**	★ **827**
			631-176
	Signetics	74LS194A	631-178
	TI	**SN74LS194A**	★ **990**
			631-180
	TI	SN74LS194A	3788-98
74LS195			
	Fairchild	74LS195	631-62
		74LS195A	3788-108
	Hitachi	HD74LS195A	631-63
			3788-115
	Mitsubishi	M74LS195A	631-64
	Motorola	SN74LS195A	631-66
			3788-123
	National	DM74LS195A	631-68
	Panasonic	**DN74LS195A**	★ **827**
			631-69
	Signetics	74LS195A	631-70
			3789-7
	TI	**SN74LS195A**	★ **991**
			631-72
	TI	SN74LS195A	3789-13
74LS196			
	Fairchild	74LS196	610-5
	Motorola	SN74LS196	610-7
	National	DM74LS196	610-9
	Panasonic	**DN74LS196**	★ **827**
			610-10
	SGS	74LS196	610-12
	TI	**SN74LS196**	★ **991**
			610-14
74LS197			
	Fairchild	74LS197	607-149
	Hitachi	HD74LS197	607-150
	Motorola	SN74LS197	607-152
	National	DM74LS197	607-154
	Panasonic	**DN74LS197**	★ **827**
			607-155
	SGS	74LS197	607-157
	Signetics	74LS197	607-159
	TI	**SN74LS197**	★ **992**
			607-161
74LS20	Fairchild	74LS20	620-72
	Hitachi	HD74LS20	620-73
	Mitsubishi	M74LS20	620-74
	Motorola	SN74LS20	620-76
	National	DM74LS20	620-78
	Panasonic	**DN74LS20**	★ **826**
			★ **834**
			620-79
	SGS	74LS20	620-81
	Signetics	74LS20	620-83
	TI	**SN74LS20**	★ **926**
			620-85
74LS21	Fairchild	74LS21	618-134
	Hitachi	HD74LS21	618-135
	Mitsubishi	M74LS21	618-136
	Motorola	SN74LS21	618-138
	National	DM74LS21	618-140
	Panasonic	**DN74LS21**	★ **826**
			★ **834**
			618-141
	SGS	74LS21	618-143
	Signetics	74LS21	618-145
	TI	**SN74LS21**	★ **927**
			618-147
74LS210			
	MMI	**SN74LS210**	★ **804**
			633-169
74LS211			
	TI	SN74LS211	3771-55

¶ Indicates page number in Application Note Directory.
★ Indicates addition data is provided on the page noted.

Base Number	Source	Device	Page-Line
74LS212			
	TI	SN74LS212	3771-56
74LS213			
	TI	SN74LS213	3771-58
74LS214			
	TI	SN74LS214	3774-105
74LS215			
	TI	SN74LS215	3774-86
74LS216			
	TI	SN74LS216	3771-91
74LS217			
	TI	SN74LS217	3771-92
74LS218			
	TI	SN74LS218	3771-63
74LS219			
	TI	**SN74LS219A**	★ **994**
			3771-33
74LS22	Fairchild	74LS22	620-17
	Hitachi	HD74LS22	620-18
	Mitsubishi	M74LS22	620-19
	Motorola	SN74LS22	620-21
	National	DM74LS22	620-23
	Panasonic	**DN74LS22**	★ **826**
			★ **834**
			620-24
	SGS	74LS22	620-26
	TI	**SN74LS22**	★ **927**
			620-28
74LS221			
	Hitachi	HD74LS221	630-146
	Motorola	SN74LS221	630-148
	National	DM74LS221	630-150
	TI	**SN74LS221**	★ **994**
			630-153
74LS222			
	TI	**SN74LS222**	★ **995**
			3757-8
74LS224			
	TI	**SN74LS224**	★ **995**
			3757-9
74LS227			
	TI	**SN74LS227**	★ **997**
			3757-12
74LS228			
	TI	**SN74LS228**	★ **997**
			3757-13
74LS24	**TI**	**SN74LS24**	★ **928**
			638-45
74LS240			
	Fairchild	74LS240	633-163
			2669-59
	Hitachi	HD74LS240	633-165
	Mitsubishi	M74LS240	634-2
			2669-61
	MMI	**SN74LS240**	★ **804**
			633-170
	MMI	SN74LS240	2669-65
	Motorola	SN74LS240	633-174
			2669-69
	National	DM74LS240	633-177
	Panasonic	**DN74LS240**	★ **826**
			★ **834**
			634-115
	Signetics	74LS240	633-178
			2670-4
	TI	SN74LS240	633-181
			2670-15
74LS241			
	Fairchild	74LS241	634-37
			2669-3
	Hitachi	HD74LS241	634-39
			2669-6
	Mitel	M74LS241	2669-8
	Mitsubishi	M74LS241	634-40
	MMI	**SN74LS241**	★ **804**
			634-44
	MMI	SN74LS241	2669-17
	Motorola	SN74LS241	634-49
			2669-27
	National	DM74LS241	634-53
			2669-31
	Panasonic	**DN74LS241**	★ **826**
			★ **834**
			634-119
	Signetics	74LS241	634-57
			2669-36
			(Continued)

Base Number	Source	Device	Page-Line
74LS241			
	TI	SN74LS241	634-61
			2669-51
74LS242			
	Fairchild	74LS242	633-100
			2675-51
	Hitachi	HD74LS242	633-102
			2675-53
	Mitel	M74LS242	2675-54
	Mitsubishi	M74LS242	633-104
	Motorola	SN74LS242	633-108
			2675-56
	National	DM74LS242	633-112
			2675-58
	Signetics	74LS242	633-114
			2675-60
	TI	SN74LS242	633-120
			2675-64
74LS243			
	Fairchild	74LS243	633-101
			2675-52
	Hitachi	HD74LS243	633-103
			2678-15
	Mitel	M74LS243	2675-55
	Mitsubishi	M74LS243	633-105
	Motorola	SN74LS243	633-109
			2675-57
	National	DM74LS243	633-113
			2675-59
	Signetics	74LS243	633-115
			2675-61
	TI	SN74LS243	633-121
			2675-65
74LS244			
	Fairchild	74LS244	634-90
			2669-4
	Hitachi	HD74LS244	634-91
			2669-7
	Mitsubishi	M74LS244	634-92
			2669-9
	MMI	**SN74LS244**	★ **804**
			634-95
	MMI	SN74LS244	2669-18
	Motorola	SN74LS244	634-98
			2669-28
	National	DM74LS244	634-54
			2669-32
	Panasonic	**DN74LS244**	★ **826**
			★ **834**
			634-118
	Signetics	74LS244	634-100
			2669-37
	TI	SN74LS244	634-102
			2669-52
74LS245			
	Fairchild	74LS245	635-107
			2678-13
	Hitachi	HD74LS245	635-108
			2678-16
	Mitsubishi	M74LS245	635-109
			2678-17
	MMI	**SN74LS245**	★ **804**
			635-113
	MMI	SN74LS245	2669-19
	Motorola	SN74LS245	635-118
			2678-18
	National	DM74LS245	635-121
			2678-21
	Panasonic	**DN74LS245**	★ **826**
			★ **834**
			635-122
	Signetics	74LS245	635-125
			2678-23
	TI	SN74LS245	635-131
			2677-57
74LS247			
	Fairchild	74LS247	2661-157
	Hitachi	HD74LS247	2661-162
	Motorola	SN74LS247	2661-167
	National	DM74LS247	2662-6
	TI	**SN74LS247**	★ **1001**
			2662-18
74LS248			
	Fairchild	74LS248	2661-114
	Hitachi	HD74LS248	2661-118
	Motorola	SN74LS248	2661-125
			(Continued)

Base Number	Source	Device	Page-Line
74LS248			
	National	DM74LS248	2661-131
	TI	**SN74LS248**	★ **1002**
			2661-141
74LS249			
	Fairchild	74LS249	2661-89
	Hitachi	HD74LS249	2661-91
	Motorola	SN74LS249	2661-96
	National	DM74LS249	2661-100
	TI	**SN74LS249**	★ **1002**
			2661-108
74LS251			
	Fairchild	74LS251	630-48
	Hitachi	HD74LS251	630-49
	Mitsubishi	M74LS251	630-50
	Motorola	SN74LS251	630-52
	National	DM74LS251	630-54
	Panasonic	**DN74LS251**	★ **827**
			630-55
	SGS	74LS251	630-57
	Signetics	74LS251A	630-59
	TI	**SN74LS251**	★ **1003**
			630-61
	TI	SN74LS251	1349-143
74LS253			
	Fairchild	74LS253	628-4
	Hitachi	HD74LS253	628-5
	Mitsubishi	M74LS253	628-6
	Motorola	SN74LS253	628-8
	National	DM74LS253	628-10
	Panasonic	**DN74LS253**	★ **827**
			628-11
	SGS	74LS253	628-13
	Signetics	74LS253	628-15
	TI	**SN74LS253**	★ **1003**
			628-17
74LS256			
	Fairchild	74LS256	625-54
	Mitsubishi	M74LS256	625-55
	Motorola	SN74LS256	625-57
	SGS	T74LS256	625-59
	Signetics	74LS256	625-60
74LS257			
	Fairchild	74LS257	628-174
	Hitachi	HD74LS257	628-175
	Mitsubishi	M74LS257	628-176
	Motorola	SN74LS257A	628-178
	National	DM74LS257B	628-180
	Panasonic	**DN74LS257A**	★ **827**
			628-181
	SGS	74LS257	628-183
	Signetics	74LS257A	628-185
	TI	**SN74LS257A**	★ **1004**
			628-187
74LS258			
	Fairchild	74LS258	628-101
	Hitachi	HD74LS258	628-102
	Mitsubishi	M74LS258	628-103
	Motorola	SN74LS258A	628-105
	National	DM74LS258B	628-107
	Panasonic	**DN74LS258A**	★ **827**
			628-108
	SGS	74LS258	628-110
	Signetics	74LS258A	628-113
	TI	**SN74LS258A**	★ **1005**
			628-115
74LS259			
	Fairchild	74LS259	626-27
	Hitachi	HD74LS259	626-28
	Mitsubishi	M74LS259	626-29
	Motorola	SN74LS259	626-31
	National	DM74LS259	626-33
	SGS	74LS259	626-35
	Signetics	74LS259	626-37
	TI	**SN74LS259**	★ **1005**
			626-39
	TI	SN74LS259	1349-130
74LS26	Fairchild	74LS26	621-21
	Hitachi	HD74LS26	621-22
	Motorola	SN74LS26	621-24
	National	DM74LS26	621-26
	Panasonic	**DN74LS26**	★ **826**
			★ **834**
			621-27
	SGS	T74LS26	621-28
	Signetics	74LS26	621-30
			(Continued)

Base Number	Source	Device	Page-Line
74LS26	**TI**	**SN74LS26**	★ **928**
			621-32
74LS260			
	Fairchild	74LS260	623-155
	Motorola	SN74LS260	623-157
	Panasonic	**DN74LS260**	★ **826**
			★ **834**
			623-158
	SGS	T74LS260	623-160
	Signetics	74LS260	623-162
74LS261			
	TI	**SN74LS261**	★ **1006**
			604-118
74LS266			
	Fairchild	74LS266	625-33
	Hitachi	HD74LS266	625-34
	Mitsubishi	M74LS266	625-35
	Motorola	SN74LS266	625-37
	National	DM74LS266	625-39
	Panasonic	**DN74LS266**	★ **826**
			★ **834**
			625-40
	SGS	74LS266	625-42
	TI	**SN74LS266**	★ **1007**
			625-47
74LS27	Fairchild	74LS27	624-7
	Hitachi	HD74LS27	624-8
	Mitsubishi	M74LS27	624-9
	Motorola	SN74LS27	624-11
	National	DM74LS27	624-13
	Panasonic	**DN74LS27**	★ **826**
			★ **834**
			624-14
	SGS	74LS27	624-16
	Signetics	74LS27	624-18
	TI	**SN74LS27**	★ **929**
			624-20
74LS273			
	Fairchild	74LS273	616-73
	Hitachi	HD74LS273	616-74
	Mitsubishi	M74LS273	616-75
	MMI	**SN74LS273**	★ **804**
			616-77
	Motorola	SN74LS273	616-79
	SGS	T74LS273	616-80
	Signetics	74LS273	616-82
	TI	**SN74LS273**	★ **1007**
			616-84
74LS275			
	TI	**SN74LS275**	★ **1008**
			605-123
74LS279			
	Fairchild	74LS279	625-138
	Hitachi	HD74LS279	625-139
	Mitsubishi	M74LS279	625-140
	Motorola	SN74LS279	625-142
	National	DM74LS279	625-144
	Panasonic	**DN74LS279**	★ **827**
			625-145
	SGS	74LS279	625-147
	TI	**SN74LS279**	★ **1009**
			625-150
74LS28	Fairchild	74LS28	624-85
	Motorola	SN74LS28	624-91
	Panasonic	**DN74LS28**	★ **826**
			★ **834**
			624-95
	SGS	T74LS28	624-99
	TI	**SN74LS28**	★ **929**
			624-106
74LS280			
	Hitachi	HD74LS280	639-90
	Motorola	SN74LS280	639-92
	TI	**SN74LS280**	★ **1009**
			639-94
74LS283			
	Fairchild	74LS283	605-92
	Hitachi	HD74LS283A	605-94
	Mitsubishi	M74LS283	605-96
	Motorola	SN74LS283	605-99
	National	DM74LS283	605-103
	Panasonic	**DN74LS283**	★ **826**
			★ **834**
			605-105
	SGS	74LS283	605-109
	Signetics	74LS283	605-113
			(Continued)

Arranged alphanumerically from left to right.

Base Number	Source	Device	Page-Line
74LS283			
	TI	SN74LS283	★1011
			605-117
74LS289			
	Fairchild	74LS289	3770-114
	TI	SN74LS289A	★1012
			3771-27
74LS290			
	Fairchild	74LS290	609-145
	Hitachi	HD74LS290	609-146
	Motorola	SN74LS290	609-149
	National	DM74LS290	609-153
	Panasonic	DN74LS290	★827
			609-155
	SGS	74LS290	609-159
	Signetics	74LS290	609-163
	TI	SN74LS290	★1012
			609-167
74LS292			
	TI	SN74LS292	★1013
			612-3
74LS293			
	Fairchild	74LS293	608-123
	Hitachi	HD74LS293	608-125
	Motorola	SN74LS293	608-129
	National	DM74LS293	608-133
	Panasonic	DN74LS293	★827
			608-135
	SGS	74LS293	608-139
	Signetics	74LS293	608-143
	TI	SN74LS293	★1014
			608-147
74LS294			
	TI	SN74LS294	★1014
			612-1
74LS295			
	Fairchild	74LS295	631-31
		74LS295A	3788-109
	Mitsubishi	M74LS295B	631-32
	Motorola	SN74LS295A	631-34
			3788-124
	SGS	74LS295A	631-36
	Signetics	74LS295B	631-38
	TI	SN74LS295B	★1014
			631-40
	TI	SN74LS295B	3789-14
74LS297			
	TI	SN74LS297	★1015
			637-72
			¶ 258-13
	TI	SN74LS297	3214-33
74LS298			
	Fairchild	74LS298	629-86
	Hitachi	HD74LS298	629-89
	Mitsubishi	M74LS298	629-90
	Motorola	SN74LS298	629-94
	National	DM74LS298	629-98
	SGS	74LS298	629-100
	Signetics	74LS298	629-102
	TI	SN74LS298	★1015
			629-106
74LS299			
	Fairchild	74LS299	633-2
			3790-6
	Hitachi	HD74LS299	633-4
	Mitsubishi	M74LS299	633-5
	Motorola	SN74LS299	633-9
	TI	SN74LS299	★1016
			633-13
74LS30	Fairchild	74LS30	622-42
	Hitachi	HD74LS30	622-43
	Mitsubishi	M74LS30	622-44
	Motorola	SN74LS30	622-46
	National	DM74LS30	622-48
	Panasonic	DN74LS30	★826
			★834
			622-49
	SGS	74LS30	622-51
	Signetics	74LS30	622-53
	TI	SN74LS30	★929
			622-55
74LS301			
	Signetics	74LS301	3772-20
74LS31	TI	SN74LS31	★930
			636-153

Base Number	Source	Device	Page-Line
74LS310			
	MMI	SN74LS310	★804
			634-45
74LS311			
	TI	SN74LS311	3771-51
74LS312			
	TI	SN74LS312	3771-52
74LS314			
	TI	SN74LS314	3774-104
74LS315			
	TI	SN74LS315	3774-85
74LS316			
	TI	SN74LS316	3771-87
74LS317			
	TI	SN74LS317	3771-88
74LS318			
	TI	SN74LS318	3771-61
74LS319			
	TI	SN74LS319A	★1017
			3771-28
74LS32	Fairchild	74LS32	623-106
	Hitachi	HD74LS32	623-107
	Mitsubishi	M74LS32	623-108
	Motorola	SN74LS32	623-110
	National	DM74LS32	623-112
	Panasonic	DN74LS32	★826
			★834
			623-113
	SGS	74LS32	623-115
	Signetics	74LS32	623-117
	TI	SN74LS32	★930
			623-119
74LS320			
	TI	SN74LS320	★1017
			637-67
74LS321			
	TI	SN74LS321	★1017
			637-68
74LS322			
	AMD	SN74LS322	605-131
	Fairchild	74LS322	632-124
	Motorola	SN74LS322	605-134
	TI	SN74LS322A	★1018
			605-136
74LS323			
	AMD	SN74LS323	632-182
			3790-3
	Fairchild	74LS323	633-3
			3790-7
	Mitsubishi	M74LS323	633-6
	Motorola	SN74LS323	633-10
	TI	SN74LS323	★1018
			633-14
	TI	SN74LS323	3790-11
74LS324			
	TI	SN74LS324	637-89
74LS325			
	TI	SN74LS325	637-112
			3215-41
74LS326			
	TI	SN74LS326	637-113
			3215-42
74LS327			
	TI	SN74LS327	637-114
			3215-43
74LS328			
	TI	SN74LS328	637-119
			3215-44
74LS33	Fairchild	74LS33	624-30
	Motorola	SN74LS33	624-32
	Panasonic	DN74LS33	★826
			★834
			624-33
	SGS	T74LS33	624-35
	Signetics	74LS33	624-37
	TI	SN74LS33	★930
			624-39
74LS340			
	MMI	SN74LS340	★804
			633-171
74LS341			
	MMI	SN74LS341	★804
			634-46
	MMI	SN74LS341	2669-20

Base Number	Source	Device	Page-Line
74LS344			
	MMI	SN74LS344	★804
			634-96
	MMI	SN74LS344	2669-21
74LS347			
	Fairchild	74LS347	2661-145
	TI	SN74LS347	★1019
			2661-151
74LS348			
	Motorola	SN74LS348	639-53
	TI	SN74LS348	★1019
			639-57
	TI	SN74LS348	1350-10
74LS352			
	Fairchild	74LS352	627-151
	Mitsubishi	M74LS352	627-152
	Motorola	SN74LS352	627-154
	National	DM74LS352	627-156
	SGS	T74LS352	627-158
	Signetics	74LS352	627-160
	TI	SN74LS352	★1020
			627-162
74LS353			
	Fairchild	74LS353	627-117
	Mitsubishi	M74LS353	627-118
	Motorola	SN74LS353	627-120
	National	DM74LS353	627-122
	SGS	T74LS353	627-124
	Signetics	74LS353	627-126
	TI	SN74LS353	★1021
			★1022
			627-128
74LS354			
	TI	SN74LS354	★1021
			630-29
74LS355			
	TI	SN74LS355	630-25
74LS356			
	TI	SN74LS356	★1022
			630-30
74LS357			
	TI	SN74LS357	★1023
			630-26
74LS363			
	Signetics	74LS363	626-81
74LS364			
	Signetics	74LS364	616-33
74LS365			
	Fairchild	74LS365	606-54
	Hitachi	HD74LS365A	606-56
	Mitsubishi	M74LS365A	606-58
	Motorola	SN74LS365A	606-62
	National	DM74LS365A	606-66
	Panasonic	DN74LS365A	★826
			★834
			606-68
	SGS	74LS365	606-72
	Signetics	74LS365A	606-76
	TI	SN74LS365A	★1023
			606-80
	TI	SN74LS365A	2670-20
74LS366			
	Fairchild	74LS366	607-8
	Mitsubishi	M74LS366A	607-11
	Motorola	SN74LS366A	607-15
	National	DM74LS366A	607-19
	Panasonic	DN74LS366A	★826
			★834
			607-21
	SGS	74LS366	607-25
	Signetics	74LS366A	607-29
	TI	SN74LS366A	★1023
			607-33
	TI	SN74LS366A	2670-24
74LS367			
	Fairchild	74LS367	606-55
	Hitachi	HD74LS367A	606-57
			614-103
	Mitsubishi	M74LS367A	606-59
			614-57
	Motorola	SN74LS367A	606-63
	National	DM74LS367A	606-67
	Panasonic	DN74LS367A	★826
			★834
			606-69
	SGS	74LS367	606-73
	Signetics	74LS367A	606-77
			(Continued)

Base Number	Source	Device	Page-Line
74LS367			
	TI	SN74LS367A	★1024
			606-81
	TI	SN74LS367A	2670-21
74LS368			
	Fairchild	74LS368	607-9
	Hitachi	HD74LS368	607-10
	Mitsubishi	M74LS368A	607-12
	Motorola	SN74LS368A	607-16
	National	DM74LS368A	607-20
	Panasonic	DN74LS368A	★826
			★834
			607-22
	SGS	74LS368	607-26
	Signetics	74LS368A	607-30
	TI	SN74LS368A	★1024
			607-34
	TI	SN74LS368A	2670-25
74LS37	Fairchild	74LS37	621-55
	Hitachi	HD74LS37	621-56
	Mitsubishi	M74LS37	621-57
	Motorola	SN74LS37	621-59
	National	DM74LS37	621-61
	Panasonic	DN74LS37	★826
			★834
			621-62
	SGS	74LS37	621-64
	Signetics	74LS37	621-66
	TI	SN74LS37	★932
			621-68
74LS373			
	Fairchild	74LS373	626-67
	Hitachi	HD74LS373	626-69
	Mitsubishi	M74LS373	626-70
	MMI	SN74LS373	★804
			626-72
	Motorola	SN74LS373	626-74
	National	DM74LS373	626-76
	Panasonic	DN74LS373	★826
			★834
			626-77
	SGS	T74LS373	626-78
	Signetics	74LS373	626-82
	TI	SN74LS373	★1025
			626-87
74LS374			
	Fairchild	74LS374	616-124
	Hitachi	HD74LS374	616-126
	Mitsubishi	M74LS374	616-127
	MMI	SN74LS374	★804
			616-129
	Motorola	SN74LS374	616-131
			¶ 274-4
	National	DM74LS374	616-133
	SGS	T74LS374	616-134
	Signetics	74LS374	616-136
	TI	SN74LS374	★1026
			616-138
74LS375			
	Fairchild	74LS375	625-95
	Hitachi	HD74LS375	625-96
	Mitsubishi	M74LS375	625-98
	Motorola	SN74LS375	625-102
	Signetics	74LS375	625-109
	TI	SN74LS375	★1026
			625-113
74LS377			
	Fairchild	74LS377	616-155
	Mitsubishi	M74LS377	616-156
	MMI	SN74LS377	★804
			616-158
	Motorola	SN74LS377	616-160
			¶ 274-4
	SGS	T74LS377	616-161
	Signetics	74LS377	616-163
	TI	SN74LS377	★1027
			616-165
74LS378			
	AMD	SN74LS378	616-11
	Fairchild	74LS378	616-13
	Motorola	SN74LS378	616-15
	SGS	T74LS378	616-17
	Signetics	74LS378	616-19
	TI	SN74LS378	★1027
			616-21

¶ Indicates page number in Application Note Directory.
★ Indicates addition data is provided on the page noted.

Base Number	Source	Device	Page-Line
74LS379			
	AMD	SN74LS379	615-106
	Fairchild	74LS379	615-108
	Motorola	SN74LS379	615-110
	SGS	T74LS379	615-112
	TI	**SN74LS379**	**★1028**
			615-114
74LS38	Fairchild	74LS38	621-4
	Hitachi	HD74LS38	621-5
	Mitsubishi	M74LS38	621-6
	Motorola	SN74LS38	621-8
	National	DM74LS38	621-10
	Panasonic	**DN74LS38**	**★826**
			★834
			621-11
	SGS	74LS38	621-145
	Signetics	74LS38	621-13
	TI	**SN74LS38**	**★932**
			621-15
74LS380			
	MMI	SN74LS380	632-158
74LS381			
	TI	**SN74LS381**	**★1028**
			604-60
74LS382			
	TI	**SN74LS382**	**★1029**
			604-61
74LS384			
	AMD	SN74LS384	605-18
	TI	**SN74LS384**	**★1029**
			605-20
74LS385			
	AMD	SN74LS385	603-11
	Motorola	SN74LS385	603-13
	TI	**SN74LS385**	**★1030**
			603-15
74LS386			
	Fairchild	74LS386	624-180
	Hitachi	HD74LS386	624-182
	Mitsubishi	M74LS386	624-184
	Motorola	SN74LS386	624-188
	National	DM74LS386	624-162
	Panasonic	**DN74LS386**	**★826**
			★834
			625-3
	TI	**SN74LS386**	**★1030**
			625-11
74LS388			
	AMD	SN74LS388	615-89
74LS390			
	Fairchild	74LS390	610-129
	Motorola	SN74LS390	610-135
	National	DM74LS390	610-138
	Panasonic	**DN74LS390**	**★827**
			610-139
	SGS	T74LS390	610-143
	Signetics	74LS390	610-147
	TI	**SN74LS390**	**★1031**
			610-151
74LS393			
	Fairchild	74LS393	608-85
	Hitachi	HD74LS393	608-86
	Mitsubishi	M74LS393	608-87
	Motorola	SN74LS393	608-89
	National	DM74LS393	608-91
	Panasonic	**DN74LS393**	**★827**
			608-92
	SGS	T74LS393	608-94
	Signetics	74LS393	608-96
	TI	**SN74LS393**	**★1031**
			608-98
74LS395			
	Fairchild	74LS395	631-132
			3788-110
	Mitsubishi	M74LS395A	631-133
	Motorola	SN74LS395	3788-125
	Panasonic	**DN74LS395A**	**★827**
			631-134
	SGS	T74LS395	631-136
			3789-4
	Signetics	74LS395A	631-138
	TI	**SN74LS395A**	**★1031**
			631-140
	TI	SN74LS395A	3789-15
74LS396			
	TI	**SN74LS396**	**★1032**
			626-166
74LS398			
	Fairchild	74LS398	629-87
	Motorola	SN74LS398	629-95
	TI	**SN74LS398**	**★1032**
			629-107
74LS399			
	AMD	SN74LS399	629-82
	Fairchild	74LS399	629-88
	Motorola	SN74LS399	629-96
	TI	**SN74LS399**	**★1032**
			629-108
74LS40	Fairchild	74LS40	619-172
	Hitachi	HD74LS40	619-173
	Mitsubishi	M74LS40	619-174
	Motorola	SN74LS40	619-176
	National	DM74LS40	619-178
	Panasonic	**DN74LS40**	**★826**
			★834
			619-179
	SGS	74LS40	619-181
	Signetics	74LS40	619-183
	TI	**SN74LS40**	**★933**
			619-185
74LS42	Fairchild	74LS42	612-94
	Hitachi	HD74LS42	612-95
	Motorola	SN74LS42	612-97
	National	DM74LS42	612-99
	Panasonic	**DN74LS42**	**★827**
			612-100
	SGS	74LS42	612-102
	Signetics	74LS42	612-104
	TI	**SN74LS42**	**★933**
			612-106
74LS422			
	TI	**SN74LS422**	**★1033**
			630-119
74LS423			
	TI	**SN74LS423**	**★1033**
			630-155
74LS424			
	TI	SN74LS424	1345-94
74LS440			
	TI	**SN74LS440**	**★1035**
			★1036
			2675-13
74LS441			
	TI	**SN74LS441**	**★1035**
			★1036
			2675-14
74LS442			
	TI	**SN74LS442**	**★1035**
			★1036
			633-130
			★1035
			★1036
			2675-16
74LS443			
	TI	**SN74LS443**	**★1035**
			★1036
			633-131
			★1035
			★1036
			2675-17
74LS444			
	TI	**SN74LS444**	**★1035**
			★1036
			633-132
			★1035
			★1036
			2675-18
74LS445			
	Signetics	74LS445	612-36
	TI	**SN74LS445**	**★1037**
			612-38
74LS446			
	TI	**SN74LS446**	**★1038**
			2675-37
74LS447			
	Fairchild	74LS447	2661-146
	TI	**SN74LS447**	**★1038**
			2661-152
74LS448			
	TI	**SN74LS448**	**★1039**
			633-133
	TI	SN74LS448	2675-15
74LS449			
	TI	**SN74LS449**	**★1039**
			2675-38
74LS450			
	MMI	SN74LS450	630-89
74LS451			
	MMI	SN74LS451	628-76
74LS453			
	MMI	SN74LS453	629-118
74LS46	**TI**	**SN74LS46**	**★935**
			2662-33
74LS461			
	MMI	SN74LS461	608-154
74LS462			
	TI	SN74LS462	637-6
			1350-22
74LS463			
	TI	SN74LS463	637-7
			1350-16
74LS465			
	TI	**SN74LS465**	**★1040**
			606-113
74LS466			
	TI	**SN74LS466**	**★1040**
			607-116
74LS467			
	TI	**SN74LS467**	**★1040**
			606-114
74LS468			
	TI	**SN74LS468**	**★1040**
			607-117
74LS47	Fairchild	74LS47	2661-158
	Hitachi	HD74LS47	2661-163
	Motorola	SN74LS47	2662-1
	National	DM74LS47	2662-7
	TI	**SN74LS47**	**★935**
			2662-19
74LS471			
	National	**DM74LS471**	**★4057**
			3761-10
74LS48	Fairchild	74LS48	2661-115
	Hitachi	HD74LS48	2661-119
	Motorola	SN74LS48	2661-126
	National	DM74LS48	2661-132
	TI	**SN74LS48**	**★935**
			2661-142
74LS481			
	TI	**SN74LS481**	**★1041**
			1337-62
	TI	SN74LS481	1257-13
74LS49	Fairchild	74LS49	2661-90
	Hitachi	HD74LS49	2661-92
	Motorola	SN74LS49	2661-97
	National	DM74LS49	2661-101
	TI	**SN74LS49**	**★935**
			2661-109
74LS490			
	Fairchild	74LS490	610-130
	Hitachi	HD74LS490	610-131
	Motorola	SN74LS490	610-136
	Panasonic	**DN74LS490**	**★827**
			610-140
	SGS	T74LS490	610-144
	Signetics	74LS490	610-148
	TI	**SN74LS490**	**★1043**
			610-152
74LS491			
	MMI	SN74LS491	611-173
74LS498			
	MMI	SN74LS498	632-156
74LS502			
	Fairchild	74LS502	639-23
74LS503			
	Fairchild	74LS503	639-24
74LS51	Fairchild	74LS51	622-136
	Hitachi	HD74LS51	622-137
	Motorola	SN74LS51	622-139
	National	DM74LS51	622-141
	Panasonic	**DN74LS51**	**★826**
			★834
			622-142
	Signetics	74LS51	622-146
	TI	**SN74LS51**	**★936**
			622-148
74LS533			
	Fairchild	74LS533	626-127
	MMI	**SN74LS533**	**★804**
			626-131
74LS534			
	Fairchild	74LS534	616-55
	MMI	**SN74LS534**	**★804**
			616-57
74LS54	Fairchild	74LS54	623-40
	Hitachi	HD74LS54	623-41
	Motorola	SN74LS54	623-43
	National	DM74LS54	623-45
	Panasonic	**DN74LS54**	**★826**
			★834
			623-46
	SGS	74LS54	623-48
	Signetics	74LS54	623-50
	TI	**SN74LS54**	**★938**
			623-52
74LS540			
	Fairchild	74LS540	633-164
			2669-60
	Motorola	SN74LS540	633-175
			2669-70
	Signetics	74LS540	2670-5
	TI	**SN74LS540**	**★1050**
			634-1
	TI	SN74LS540	2670-16
74LS541			
	Fairchild	74LS541	634-38
			2669-5
	Motorola	SN74LS541	634-50
			2669-29
	Signetics	74LS541	634-58
			2669-38
	TI	**SN74LS541**	**★1050**
			634-62
	TI	SN74LS541	2669-53
74LS55	Fairchild	74LS55	622-172
	Hitachi	HD74LS55	622-173
	Motorola	SN74LS55	622-175
	National	DM74LS55	622-177
	Panasonic	**DN74LS55**	**★826**
			★834
			622-178
	SGS	74LS55	622-180
	TI	**SN74LS55**	**★939**
			622-182
74LS56	**TI**	**SN74LS56**	**★939**
			639-144
74LS563			
	Fairchild	74LS563	626-128
74LS564			
	Fairchild	74LS564	626-129
74LS568			
	Motorola	SN74LS568	611-30
	Signetics	74LS568	610-184
74LS569			
	Motorola	SN74LS569	609-77
	Signetics	74LS569	609-78
74LS57	**TI**	**SN74LS57**	**★940**
			639-146
74LS573			
	Fairchild	74LS573	626-68
74LS574			
	Fairchild	74LS574	616-125
74LS590			
	TI	**SN74LS590**	**★1056**
			608-161
74LS591			
	TI	**SN74LS591**	**★1056**
			608-162
74LS592			
	TI	**SN74LS592**	**★1057**
			608-157
74LS593			
	TI	**SN74LS593**	**★1057**
			611-171
74LS594			
	TI	**SN74LS594**	**★1058**
			632-131
74LS595			
	TI	**SN74LS595**	**★1058**
			632-132
74LS596			
	TI	**SN74LS596**	**★1058**
			632-133

Arranged alphanumerically from left to right.

© IC MASTER 1984

Base Number	Source	Device	Page-Line
74LS597			
	TI	**SN74LS597**	★1059
			632-119
74LS598			
	TI	**SN74LS598**	★1059
			632-120
74LS599			
	TI	**SN74LS599**	★1060
			632-134
74LS600			
	TI	SN74LS600	636-166
	TI	**SN74LS600A**	★1061
			636-158
			¶ 323-6
74LS601			
	TI	SN74LS601	636-167
	TI	**SN74LS601A**	★1061
			636-159
			¶ 323-6
74LS602			
	TI	SN74LS602	636-168
	TI	**SN74LS602A**	★1062
			636-160
74LS603			
	TI	SN74LS603	636-169
	TI	**SN74LS603A**	★1062
			636-161
74LS604			
	Motorola	SN74LS604	625-179
	TI	**SN74LS604**	★1063
			626-7
74LS605			
	Motorola	SN74LS605	625-180
	TI	**SN74LS605**	★1063
			626-8
74LS606			
	Motorola	SN74LS606	625-181
	TI	**SN74LS606**	★1063
			626-9
74LS607			
	Motorola	SN74LS607	626-1
	TI	**SN74LS607**	★1063
			626-10
74LS608			
	TI	**SN74LS608**	★1064
			626-11
74LS610			
	TI	**SN74LS610**	★1065
			637-37
			¶ 264-15
74LS611			
	TI	**SN74LS611**	★1065
			637-38
			¶ 264-15
74LS612			
	TI	**SN74LS612**	★1065
			637-39
			¶ 264-15
74LS613			
	TI	**SN74LS613**	★1065
			637-40
			¶ 264-15
74LS62	National	DM74LS62	626-157
74LS620			
	Motorola	SN74LS620	636-83
	Signetics	74LS620	636-86
	TI	**SN74LS620**	★1066
			2677-58
74LS621			
	Motorola	SN74LS621	636-50
	TI	**SN74LS621**	★1066
			2677-44
74LS622			
	Motorola	SN74LS622	636-51
	TI	**SN74LS622**	★1066
			2677-45
74LS623			
	Motorola	SN74LS623	636-84
	Signetics	74LS623	636-87
	TI	**SN74LS623**	★1066
			2677-59
74LS624			
	TI	**SN74LS624**	★1067
			637-90
	TI	SN74LS624	3214-159
74LS625			
	TI	**SN74LS625**	★1067
			637-120
	TI	SN74LS625	3215-45
74LS626			
	TI	**SN74LS626**	★1067
			637-121
	TI	SN74LS626	3215-46
74LS627			
	TI	**SN74LS627**	★1068
			637-122
	TI	SN74LS627	3215-47
74LS628			
	TI	**SN74LS628**	★1068
			637-91
	TI	SN74LS628	3214-160
74LS629			
	TI	**SN74LS629**	★1068
			637-123
	TI	SN74LS629	3215-48
74LS63	TI	**SN74LS63**	★ 941
			638-51
74LS630			
	TI	**SN74LS630**	★1069
			2665-59
			¶ 319-4
74LS631			
	TI	**SN74LS631**	★1069
			2665-60
			¶ 319-4
74LS636			
	TI	**SN74LS636**	★1072
			★1153
			637-4
			★1072
			★1153
			2665-61
74LS637			
	TI	**SN74LS637**	★1072
			★1153
			637-5
			★1072
			★1153
			2665-62
74LS640			
	Mitsubishi	M74LS640-1	635-21
	Motorola	SN74LS640	635-25
			2678-19
	Signetics	74LS640	635-27
			2677-54
		74LS640-1	635-28
			2677-55
	TI	**SN74LS640**	★1074
			635-33
	TI	SN74LS640	2677-60
	TI	**SN74LS640-1**	★1074
			635-34
	TI	SN74LS640-1	2677-61
74LS641			
	Mitsubishi	M74LS641	635-60
	Motorola	SN74LS641	635-62
			2678-9
	Signetics	74LS641	635-64
			2677-10
		74LS641-1	635-65
			2677-11
	TI	**SN74LS641**	★1074
			635-67
	TI	SN74LS641	2677-46
	TI	**SN74LS641-1**	★1074
			635-68
	TI	SN74LS641-1	2677-47
74LS642			
	Mitsubishi	M74LS642-1	634-150
	Motorola	SN74LS642	634-152
			2678-10
	Signetics	74LS642	634-153
			2677-12
		74LS642-1	634-154
			2677-13
	TI	**SN74LS642**	★1074
			634-156
	TI	SN74LS642	2677-48
	TI	**SN74LS642-1**	★1074
			634-157
	TI	SN74LS642-1	2677-49
74LS643			
	Mitsubishi	M74LS643-1	635-22
	Motorola	SN74LS643	635-26
	TI	**SN74LS643**	★1074
			635-35
	TI	SN74LS643	2677-62
	TI	**SN74LS643-1**	★1074
			635-36
	TI	SN74LS643-1	2677-63
74LS644			
	Mitsubishi	M74LS644-1	635-145
	Motorola	SN74LS644	635-147
	TI	**SN74LS644**	★1074
			635-149
	TI	SN74LS644	2677-50
	TI	**SN74LS644-1**	★1074
			635-150
	TI	SN74LS644-1	2677-51
74LS645			
	Mitsubishi	M74LS645-1	635-110
	MMI	**SN74LS645**	★ 804
			635-114
	MMI	SN74LS645	2677-52
	MMI	**SN74LS645-1**	★ 804
			635-115
	MMI	SN74LS645-1	2677-53
	Motorola	SN74LS645	635-119
			2678-20
	Signetics	74LS645	635-126
			2677-56
	TI	**SN74LS645**	★1074
			635-132
	TI	SN74LS645	2677-64
	TI	**SN74LS645-1**	★1074
			635-133
	TI	SN74LS645-1	2677-65
74LS646			
	TI	**SN74LS646**	★1076
			2678-31
74LS647			
	TI	**SN74LS647**	★1076
			2678-11
74LS648			
	TI	**SN74LS648**	★1076
			2678-32
74LS649			
	TI	**SN74LS649**	★1076
			2678-12
74LS651			
	TI	**SN74LS651**	★1078
			635-37
			636-24
74LS652			
	TI	**SN74LS652**	★1078
			635-38
			636-25
74LS653			
	TI	**SN74LS653**	★1079
			635-158
74LS654			
	TI	**SN74LS654**	★1079
			635-165
74LS668			
	Hitachi	HD74LS668	611-10
	Motorola	SN74LS668	611-14
	TI	**SN74LS668**	★1080
			611-24
74LS669			
	Hitachi	HD74LS669	609-10
	Motorola	SN74LS669	609-121
	TI	**SN74LS669**	★1080
			609-24
74LS670			
	Fairchild	74LS670	627-28
			3770-43
	Hitachi	HD74LS670	627-29
			3770-44
	Mitel	M74LS670	3770-45
	Mitsubishi	M74LS670	627-30
	Motorola	SN74LS670	627-32
			3770-47
	National	DM74LS670	627-34
			3770-49
	SGS	74LS670	627-36
			3770-50
	Signetics	74LS670	627-38
			3770-52
			(Continued)
74LS670			
	TI	**SN74LS670**	★1080
			627-40
	TI	SN74LS670	3770-54
74LS671			
	TI	**SN74LS671**	★1081
			631-28
74LS672			
	TI	**SN74LS672**	★1081
			631-29
74LS673			
	Motorola	SN74LS673	633-58
	TI	**SN74LS673**	★1082
			633-60
74LS674			
	Motorola	SN74LS674	633-45
	TI	**SN74LS674**	★1082
			633-47
74LS68	TI	**SN74LS68**	★ 942
			611-154
74LS681			
	TI	**SN74LS681**	★1085
			605-41
74LS682			
	Motorola	SN74LS682	603-134
	TI	SN74LS682	603-143
74LS683			
	Motorola	SN74LS683	603-114
	TI	**SN74LS683**	★1086
			603-122
74LS684			
	Motorola	SN74LS684	603-135
	Signetics	74LS684	603-138
	TI	**SN74LS684**	★1086
			603-144
74LS685			
	Motorola	SN74LS685	603-115
	TI	**SN74LS685**	★1086
			603-123
74LS686			
	Motorola	SN74LS686	603-136
	TI	**SN74LS686**	★1087
			603-145
74LS687			
	Motorola	SN74LS687	603-116
	TI	**SN74LS687**	★1087
			603-124
74LS688			
	Motorola	SN74LS688	603-137
	TI	**SN74LS688**	★1088
			603-146
74LS689			
	Motorola	SN74LS689	603-117
	TI	**SN74LS689**	★1088
			603-125
74LS69	TI	**SN74LS69**	★ 942
			611-152
74LS690			
	TI	**SN74LS690**	★1089
			610-117
74LS691			
	TI	**SN74LS691**	★1089
			607-174
74LS692			
	TI	**SN74LS692**	★1089
			610-118
74LS693			
	TI	**SN74LS693**	★1089
			607-175
74LS696			
	TI	**SN74LS696**	★1090
			610-171
74LS697			
	TI	**SN74LS697**	★1090
			608-166
74LS698			
	TI	**SN74LS698**	★1090
			610-172
74LS699			
	TI	**SN74LS699**	★1090
			608-167
74LS716			
	Motorola	SN74LS716	611-148
74LS718			
	Motorola	SN74LS718	611-142
74LS724			
	Motorola	SN74LS724	637-92

¶ Indicates page number in Application Note Directory.
★ Indicates addition data is provided on the page noted.

Base Number	Source	Device	Page-Line
74LS73	Hitachi	HD74LS73	617-132
	Mitsubishi	M74LS73A	617-134
	Motorola	SN74LS73A	617-138
	National	DM74LS73A	617-142
	Panasonic	**DN74LS73**	★ **826**
			★ **834**
			617-144
	Signetics	74LS73	617-148
	TI	**SN74LS73A**	★ **944**
			617-152
74LS74	Fairchild	74LS74	615-13
	Hitachi	HD74LS74A	615-14
	Mitsubishi	M74LS74	615-15
	Motorola	SN74LS74A	615-17
	National	DM74LS74	615-19
	Panasonic	**DN74LS74A**	★ **827**
			615-20
	SGS	74LS74	615-22
	Signetics	74LS74A	615-24
	TI	**SN74LS74A**	★ **945**
			★ **946**
			615-26
74LS75	Hitachi	HD74LS75	625-97
	Mitsubishi	M74LS75	625-99
	Motorola	SN74LS75	625-103
	National	DM74LS75	625-105
	Panasonic	**DN74LS75**	★ **827**
			625-106
	Signetics	74LS75	625-110
	TI	SN74LS75	625-114
74LS76	Hitachi	HD74LS76	617-172
	Mitsubishi	M74LS76A	617-173
	Motorola	SN74LS76A	617-175
	National	DM74LS76	617-177
	Panasonic	**DN74LS76**	★ **826**
			★ **834**
			617-178
	Signetics	74LS76	617-180
	TI	**SN74LS76A**	★ **946**
			617-182
74LS764			
	Signetics	**74LS764**	★ **895**
			2680-120
	Signetics	74LS764	1354-88
74LS77	Hitachi	HD74LS77	625-118
	Motorola	SN74LS77	625-120
	National	DM74LS77	625-122
	TI	**SN74LS77**	★ **947**
			625-124
74LS78	Hitachi	HD74LS78	617-87
	Motorola	SN74LS78A	617-89
	National	DM74LS78	617-91
	Panasonic	**DN74LS78**	★ **826**
			★ **834**
			617-92
	TI	**SN74LS78A**	★ **947**
			617-94
74LS783			
	Motorola	SN74LS783	627-104
			1343-98
74LS795			
	Motorola	SN74LS795	606-103
74LS796			
	Motorola	SN74LS796	606-104
74LS797			
	Motorola	SN74LS797	606-105
74LS798			
	Motorola	SN74LS798	606-106
74LS83	Fairchild	74LS83	605-93
	Hitachi	HD74LS83A	605-95
	Motorola	SN74LS83A	605-100
	National	DM74LS83A	605-104
	Panasonic	**DN74LS83A**	★ **826**
			★ **834**
			605-106
	SGS	74LS83A	605-110
	Signetics	74LS83A	605-114
	TI	**SN74LS83A**	★ **949**
			605-118
74LS848			
	Motorola	SN74LS848	639-64
74LS85	Fairchild	74LS85	603-44
	Hitachi	HD74LS85	603-50
	Motorola	SN74LS85	603-55
	National	DM74LS85	603-59
	Panasonic	**DN74LS85**	★ **826**
			(Continued)

Base Number	Source	Device	Page-Line
74LS85	**Panasonic**	**DN74LS85**	★ **834**
			603-60
	SGS	74LS85	603-62
	Signetics	74LS85	603-66
	TI	**SN74LS85**	★ **950**
			603-71
74LS86	Fairchild	74LS86	624-181
	Hitachi	HD74LS86	624-183
	Mitsubishi	M74LS86	624-185
	Motorola	SN74LS86	624-189
	National	DM74LS86	625-2
	Panasonic	**DN74LS86**	★ **826**
			★ **834**
			625-4
	SGS	74LS86	625-6
	Signetics	74LS86	625-8
	TI	**SN74LS86**	★ **950**
			625-12
74LS90	Motorola	SN74LS90	609-150
	National	DM74LS90	609-154
	Panasonic	**DN74LS90**	★ **827**
			609-156
	SGS	74LS90	609-160
	Signetics	74LS90	609-164
	TI	**SN74LS90**	★ **952**
			609-168
74LS91	Hitachi	HD74LS91	632-149
	Mitsubishi	M74LS91	632-150
	Motorola	SN74LS91	632-152
	TI	**SN74LS91**	★ **952**
			632-154
	TI	SN74LS91	3790-126
74LS92	Fairchild	74LS92	611-124
	Hitachi	HD74LS92	611-125
	Motorola	SN74LS92	611-127
	National	DM74LS92	611-129
	Panasonic	**DN74LS92**	★ **827**
			611-130
	SGS	74LS92	611-132
	Signetics	74LS92	611-134
	TI	**SN74LS92**	★ **952**
			611-136
74LS93	Fairchild	74LS93	608-124
	Hitachi	HD74LS93	608-126
	Motorola	SN74LS93	608-130
	National	DM74LS93	608-134
	Panasonic	**DN74LS93**	★ **827**
			608-136
	SGS	74LS93	608-140
	Signetics	74LS93	608-144
	TI	**SN74LS93**	★ **953**
			608-148
74LS95	Fairchild	74LS95B	631-99
			3788-111
	Hitachi	HD74LS95B	631-100
	Mitsubishi	M74LS95B	631-101
	Motorola	SN74LS95B	631-103
			3788-126
	Panasonic	**DN74LS95B**	★ **827**
			631-104
	SGS	74LS95B	631-106
	Signetics	74LS95B	631-108
			3788-85
	TI	**SN74LS95B**	★ **954**
			631-110
	TI	SN74LS95B	3788-99
74LS96	Mitsubishi	M74LS96	632-11
	Signetics	74LS96	632-13
			3789-91
	TI	**SN74LS96**	★ **954**
			632-15
	TI	SN74LS96	3789-95
74M464			
	IDT	IDT74M464-55	
			3782-27
74PC00	National	MM74PC00	583-88
74PC02	National	MM74PC02	585-47
74PC04	National	MM74PC04	574-4
74PC08	National	MM74PC08	582-132
74PC138			
	National	MM74PC138	578-159
74PC74	National	MM74PC74	580-56
74PL16L8			
	TI	**SN74PL16L8-1**	★ **4901**
			★ **4910**
			4480-55

Base Number	Source	Device	Page-Line
74PL16R4			
	TI	**SN74PL16R4-1**	★ **4901**
			★ **4910**
			4480-56
74PL16R6			
	TI	**SN74PL16R6-1**	★ **4902**
			★ **4910**
			4480-57
74PL16R8			
	TI	**SN74PL16R8-1**	★ **4902**
			★ **4910**
			4480-58
74PL20L8			
	TI	**SN74PL20L8**	★ **4903**
			★ **4914**
			4480-13
74PL20R4			
	TI	**SN74PL20R4**	★ **4903**
			★ **4914**
			4480-14
74PL20R6			
	TI	**SN74PL20R6**	★ **4904**
			★ **4914**
			4480-15
74PL20R8			
	TI	**SN74PL20R8**	★ **4904**
			★ **4914**
			4480-16
74PL333			
	TI	SN74PL333	4482-94
74PL335			
	TI	SN74PL335	4482-92
74PL839			
	TI	**SN74PL839**	★ **4905**
			★ **4918**
			4482-60
74PL840			
	TI	**SN74PL840**	★ **4905**
			★ **4918**
			4482-58
74PLR19L8			
	TI	**SN74PLR19L8**	★ **4906**
			★ **4922**
			4480-17
74PLR19R4			
	TI	**SN74PLR19R4**	★ **4906**
			★ **4922**
			4480-18
74PLR19R6			
	TI	**SN74PLR19R6**	★ **353**
			★ **4907**
			★ **4922**
			4480-13
74PLR19R8			
	TI	**SN74PLR19R8**	★ **353**
			★ **4907**
			★ **4922**
			4480-20
74PLT19L8			
	TI	**SN74PLT19L8**	★ **353**
			★ **4908**
			★ **4926**
			4480-21
74PLT19R4			
	TI	**SN74PLT19R4**	★ **353**
			★ **4908**
			★ **4926**
			4480-22
74PLT19R6			
	TI	**SN74PLT19R6**	★ **353**
			★ **4909**
			★ **4926**
			4480-23
74PLT19R8			
	TI	**SN74PLT19R8**	★ **353**
			★ **4909**
			★ **4926**
			4480-24
74S00	Fairchild	74S00	622-9
	Hitachi	HD74S00	622-10
	National	DM74S00	622-12
	Signetics	74S00	622-14
	TI	**SN74S00**	★ **920**
			622-16
74S02	Fairchild	74S02	624-106
	Hitachi	HD74S02	624-109
	National	DM74S02	624-111
			(Continued)

Base Number	Source	Device	Page-Line
74S02	Signetics	74S02	624-113
	TI	**SN74S02**	★ **920**
			624-115
74S03	Fairchild	74S03	621-140
	Hitachi	HD74S03	621-141
	National	DM74S03	621-143
	Signetics	74S03	621-146
	TI	**SN74S03**	★ **921**
			621-148
74S04	Fairchild	74S04	607-97
	Hitachi	HD74S04	607-98
	National	DM74S04	607-100
	Signetics	74S04	607-102
	TI	**SN74S04**	★ **921**
			607-105
74S05	Fairchild	74S05	606-158
	Hitachi	HD74S05	606-159
	National	DM74S05	606-161
	Signetics	74S05	606-163
	TI	**SN74S05**	★ **921**
			606-165
74S08	Fairchild	74S08	619-135
	National	DM74S08	619-137
	Signetics	74S08	619-139
	TI	**SN74S08**	★ **922**
			619-141
74S09	National	DM74S09	619-67
	TI	**SN74S09**	★ **923**
			619-78
74S10	Fairchild	74S10	620-170
	Hitachi	HD74S10	620-171
	National	DM74S10	620-173
	Signetics	74S10	620-175
	TI	**SN74S10**	★ **923**
			620-177
74S109	Fairchild	74S109	617-80
74S11	Fairchild	74S11	619-34
	Hitachi	HD74S11	619-35
	National	DM74S11	619-37
	Signetics	74S11	619-39
	TI	**SN74S11**	★ **923**
			619-41
74S112	Fairchild	74S112	618-72
	Hitachi	HD74S112	618-73
	National	DM74S112	618-75
	Signetics	74S112	618-77
	TI	**SN74S112**	★ **959**
			618-79
74S113	Fairchild	74S113	618-29
	Hitachi	HD74S113	618-30
	National	DM74S113	618-32
	Signetics	74S113	618-34
	TI	**SN74S113**	★ **959**
			618-36
74S114	Hitachi	HD74S114	618-105
	National	DM74S114	618-107
	TI	**SN74S114**	★ **960**
			618-109
74S12	Hitachi	HD74S12	620-119
74S124	**TI**	**SN74S124**	★ **962**
			3215-49
74S132	Fairchild	74S132	638-47
	TI	**SN74S132**	★ **965**
			638-49
74S133	Fairchild	74S133	622-81
	Hitachi	HD74S133	622-82
	National	DM74S133	622-84
	Signetics	74S133	622-86
	TI	**SN74S133**	★ **965**
			622-88
74S134	Fairchild	74S134	622-63
	Hitachi	HD74S134	622-64
	National	DM74S134	622-66
	Signetics	74S134	622-68
	TI	**SN74S134**	★ **965**
			622-70
74S135	Fairchild	74S135	624-121
	Hitachi	HD74S135	624-122
	National	DM74S135	624-124
	Signetics	74S135	624-126
	TI	**SN74S135**	★ **966**
			624-128
74S136	National	DM74S136	624-150
74S138	Fairchild	74S138	613-73
	Hitachi	HD74S138	613-74
	National	DM74S138	613-76
			(Continued)

Arranged alphanumerically from left to right.

© IC MASTER 1984

Base Number	Source	Device	Page-Line
74S138	Signetics	74S138	613-77
	TI	**SN74S138**	★ **968**
			613-79
74S139	Fairchild	74S139	612-153
	Hitachi	HD74S139	612-154
	National	DM74S139	612-156
	Signetics	74S139	612-158
	TI	**SN74S139**	★ **968**
			612-160
74S140	Fairchild	74S140	613-134
			2670-40
	Hitachi	HD74S140	613-135
			2670-41
	National	DM74S140	613-137
			2670-42
	Signetics	74S140	613-139
			2670-46
	TI	**SN74S140**	★ **969**
			613-141
	TI	SN74S140	2670-50
74S148	**MMI**	**SN74S148**	★ **819**
			639-59
74S15	Fairchild	74S15	618-169
	Hitachi	HD74S15	618-170
	National	DM74S15	618-172
	TI	**SN74S15**	★ **925**
			618-174
74S151	Fairchild	74S151	629-184
	Hitachi	HD74S151	629-187
	National	DM74S151	629-189
	Signetics	74S151	629-191
	TI	**SN74S151**	★ **972**
			630-2
74S153	Fairchild	74S153	628-68
	National	DM74S153	628-70
	Signetics	74S153	628-72
	TI	**SN74S153**	★ **972**
			628-74
74S157	Fairchild	74S157	629-47
	Hitachi	HD74S157	629-48
	National	DM74S157	629-50
	Signetics	74S157	629-52
	TI	**SN74S157**	★ **975**
			629-54
74S158	Fairchild	74S158	628-155
	Hitachi	HD74S158	628-156
	National	DM74S158	628-158
	Signetics	74S158	628-160
	TI	**SN74S158**	★ **975**
			628-162
74S160	**AMD**	**SN74S160**	★ **1427**
			610-69
74S161	**AMD**	**SN74S161**	★ **1427**
			608-38
74S162	National	DM74S162	610-120
	TI	**SN74S162**	★ **978**
			610-122
74S163	**TI**	**SN74S163**	★ **978**
			608-80
74S167	Fairchild	74S167	637-84
74S168	Signetics	74S168A	611-21
	TI	**SN74S168**	★ **980**
			611-26
74S169	Signetics	74S169A	609-25
	TI	**SN74S169**	★ **980**
			609-27
74S172	Signetics	74S172	627-43
			3770-61
74S174	Fairchild	74S174	615-186
	Hitachi	HD74S174	615-187
	National	DM74S174	615-189
	Signetics	74S174	615-191
	TI	**SN74S174**	★ **983**
			615-193
74S175	Fairchild	74S175	615-73
	Hitachi	HD74S175	615-74
	National	DM74S175	615-76
	Signetics	74S175	615-78
	TI	SN74S175	615-80
74S181	Hitachi	HD74S181	604-64
	Signetics	74S181	604-68
	TI	**SN74S181**	★ **985**
			604-71
74S182	Hitachi	HD74S182	604-99
	MMI	**SN74S182**	★ **819**
			604-101
			(Continued)

Base Number	Source	Device	Page-Line
74S182	National	DM74S182	604-102
			¶ 273-7
	Signetics	74S182	604-104
	TI	**SN74S182**	★ **986**
			604-106
74S188	**National**	**DM74S188**	★ **4057**
			3760-26
74S189	AMD	SN74S189	3770-107
	Fairchild	74S189	3770-108
	Hitachi	HD74S189	3770-109
	National	DM74S189	627-75
			3770-110
		DM74S189A	3770-87
	Signetics	74S189	3770-111
	TI	**SN74S189A**	★ **988**
			3770-112
74S194	Fairchild	74S194	631-182
			3789-20
	National	DM74S194	631-184
	Signetics	74S194	3789-23
	TI	**SN74S194**	★ **990**
			631-186
	TI	SN74S194	3789-27
74S195	National	DM74S195	631-76
	Signetics	74S195	631-78
			3789-24
	TI	**SN74S195**	★ **991**
			631-80
	TI	SN74S195	3789-28
74S196	National	DM74S196	610-16
	TI	**SN74S196**	★ **991**
			610-18
74S197	**TI**	**SN74S197**	★ **992**
			607-163
74S20	Fairchild	74S20	620-87
	Hitachi	HD74S20	620-88
	National	DM74S20	620-90
	Signetics	74S20	620-92
	TI	**SN74S20**	★ **926**
			620-94
74S200	National	DM74S200	627-98
			3772-32
74S201	**TI**	**SN74S201**	★ **993**
			3772-45
74S206	National	DM74S206	3772-40
74S207	TI	SN74S207	3772-99
74S208	TI	SN74S208	3772-100
74S210	**MMI**	**SN74S210**	★ **804**
			607-119
			633-141
74S214	TI	SN74S214	3774-103
		SN74S214A	3774-73
74S22	Fairchild	74S22	620-30
	Hitachi	HD74S22	620-31
	National	DM74S22	620-33
	TI	**SN74S22**	★ **927**
			620-35
74S225	**TI**	**SN74S225**	★ **996**
			627-84
	TI	SN74S225	3757-14
			1337-70
74S226	**TI**	**SN74S226**	★ **996**
			638-134
	TI	SN74S226	2675-50
74S240	**MMI**	**SN74S240**	★ **804**
			634-4
	MMI	SN74S240	2669-66
	National	DM74S240	2670-2
	Signetics	74S240	634-7
	TI	SN74S240	634-9
			2670-17
74S241	**MMI**	**SN74S241**	★ **804**
			634-64
	MMI	SN74S241	2669-22
	National	DM74S241	2669-33
	Signetics	74S241	634-66
	TI	SN74S241	634-69
			2669-54
74S242	National	DM74S242	633-124
	Signetics	74S242	633-116
74S243	National	DM74S243	633-125
	Signetics	74S243	633-117
74S244	**MMI**	**SN74S244**	★ **804**
			634-104
	MMI	SN74S244	2669-23
	Signetics	74S244	634-106

Base Number	Source	Device	Page-Line
74S251	Hitachi	HD74S251	630-62
	National	DM74S251	630-64
	Signetics	74S251	630-67
	TI	**SN74S251**	★ **1003**
			630-69
74S253	Fairchild	74S253	628-19
	National	DM74S253	628-21
	Signetics	74S253	628-23
	TI	**SN74S253**	★ **1003**
			628-25
74S257	Fairchild	74S257	628-188
	Hitachi	HD74S257	628-189
	National	DM74S257	628-191
	Signetics	74S257	628-193
	TI	**SN74S257**	★ **1004**
			628-195
74S258	Fairchild	74S258	628-117
	Hitachi	HD74S258	628-118
	National	DM74S258	628-120
	Signetics	74S258	628-122
	TI	**SN74S258**	★ **1005**
			628-124
74S260	Fairchild	74S260	623-165
	National	DM74S260	623-166
	Signetics	74S260	623-168
	TI	**SN74S260**	★ **1006**
			623-170
74S270	TI	SN74S270	3783-8
74S2708			
	TI	SN74S2708	3763-62
74S271	TI	SN74S271	3783-6
74S273	**MMI**	**SN74S273**	★ **804**
			616-86
	Signetics	74S273	616-88
74S274	**TI**	**SN74S274**	★ **1008**
			604-126
74S275	**TI**	**SN74S275**	★ **1008**
			605-125
74S280	Hitachi	HD74S280	639-100
	National	DM74S280	639-102
	Signetics	74S280	639-104
	TI	**SN74S280**	★ **1009**
			639-107
74S281	National	DM74S281	605-42
	TI	**SN74S281**	★ **1010**
			605-44
74S283	**TI**	**SN74S283**	★ **1011**
			605-120
74S287	**National**	**DM74S287**	★ **4057**
			3760-89
			¶ 320-2
74S288	**National**	**DM74S288**	★ **4057**
			3760-29
74S289	AMD	SN74S289	3770-99
	Fairchild	74S289	3770-100
	Hitachi	HD74S289	3770-101
	National	DM74S289	627-62
			3770-102
	TI	**SN74S289A**	★ **1012**
			3770-105
74S299	National	DM74S299	633-16
	TI	**SN74S299**	★ **1016**
			633-18
	TI	SN74S299	3790-13
74S30	Fairchild	74S30	622-57
	National	DM74S30	622-59
	TI	**SN74S30**	★ **929**
			622-61
74S301	**TI**	**SN74S301**	★ **1016**
			3772-43
74S314	TI	SN74S314	3774-99
		SN74S314A	3774-71
74S32	Fairchild	74S32	623-121
	National	DM74S32	623-123
	Signetics	74S32	623-125
	TI	**SN74S32**	★ **930**
			623-127
74S330	TI	SN74S330	4482-96
			1337-68
74S331	TI	SN74S331	4482-95
			1337-69
74S340	TI	SN74S340	634-10
74S341	TI	SN74S341	634-70
74S344	TI	SN74S344	634-108
74S348	**MMI**	**SN74S348**	★ **819**
			639-60

Base Number	Source	Device	Page-Line
74S350	AMD	SN74S350	638-141
	Signetics	74S350	638-143
74S37	Signetics	74S37	621-70
	TI	**SN74S37**	★ **932**
			621-72
74S370	TI	SN74S370	3783-9
74S371	TI	SN74S371	3783-7
74S373	**MMI**	**SN74S373**	★ **804**
			626-90
	National	DM74S373	626-93
	Signetics	74S373	626-95
	TI	**SN74S373**	★ **1025**
			626-98
74S374	**MMI**	**SN74S374**	★ **804**
			616-141
	National	DM74S374	616-144
	Signetics	74S374	616-146
	TI	**SN74S374**	★ **1026**
			616-148
74S377	**MMI**	**SN74S377**	★ **804**
			616-167
74S378	AMD	SN74S378	616-25
74S379	AMD	SN74S379	615-118
74S38	Signetics	74S38	621-17
	TI	**SN74S38**	★ **932**
			621-19
74S381	**MMI**	**SN74S381**	★ **819**
			604-66
	TI	**SN74S381**	★ **1028**
			604-72
74S383	**MMI**	**SN74S383**	★ **804**
74S387	**National**	**DM74S387**	★ **4057**
			3760-86
74S388	AMD	SN74S388	615-93
74S390	Hitachi	HD74S390	610-132
74S399	AMD	SN74S399	629-112
74S40	Fairchild	74S40	619-187
	Hitachi	HD74S40	619-188
	National	DM74S40	619-190
	Signetics	74S40	619-192
	TI	**SN74S40**	★ **933**
			619-194
74S408	**MMI**	**SN74S408**	★ **819**
			2680-113
		SN74S408-3	★ **819**
			2680-114
74S409	MMI	74S409	2680-116
	MMI	**SN74S409**	★ **819**
			2680-118
74S412	**TI**	**SN74S412**	★ **1033**
			626-99
	TI	SN74S412	1345-150
74S428	**TI**	**SN74S428**	★ **1034**
			1346-3
74S436	**TI**	**SN74S436**	★ **1035**
			★ **1036**
			614-86
			★ **1035**
			★ **1036**
			2683-88
74S437	**TI**	**SN74S437**	★ **1035**
			★ **1036**
			614-87
			★ **1035**
			★ **1036**
			2683-89
74S438	**TI**	**SN74S438**	★ **1034**
			1346-4
74S455	TI	SN74S455	3764-14
74S472	**National**	**DM74S472**	★ **4057**
			3762-9
		DM74S472A	★ **4057**
			3761-112
		DM74S472B	★ **4057**
			3761-113
			3762-63
74S473	**National**	**DM74S473**	★ **4057**
			3761-129
		DM74S473A	★ **4057**
			3761-105
74S474	**National**	**DM74S474**	★ **4057**
			3762-24
		DM74S474A	★ **4057**
			3761-117
74S475	**National**	**DM74S475**	★ **4057**
			3762-20
			(Continued)

¶ Indicates page number in Application Note Directory.
★ Indicates addition data is provided on the page noted.

Base Number	Source	Device	Page-Line
74S475	**National**	**DM74S475A**	★4057
			3761-108
74S481	**TI**	**SN74S481**	★1041
			605-63
	TI	SN74S481	1337-63
			1257-14
74S482	**TI**	**SN74S482**	★1042
			637-56
	TI	SN74S482	1337-65
74S484	**TI**	**SN74S484**	★1043
			3756-15
74S485	**TI**	**SN74S485**	★1043
			3756-11
74S508	**MMI**	**SN74S508**	★ 810
			603-2
74S51	Fairchild	74S51	622-150
	Hitachi	HD74S51	622-151
	National	DM74S51	622-153
	Signetics	74S51	622-155
	TI	**SN74S51**	★ 936
			622-157
74S516	**MMI**	**SN74S516**	★ 813
			604-111
74S531	**MMI**	**SN74S531**	★ 804
			626-91
74S532	**MMI**	**SN74S532**	★ 804
			616-142
74S533	**MMI**	**SN74S533**	★ 804
			626-136
74S534	**MMI**	**SN74S534**	★ 804
			616-59
	Signetics	74S534	616-62
74S535	**MMI**	**SN74S535**	★ 804
			626-137
74S536	**MMI**	**SN74S536**	★ 804
			616-60
74S557	**MMI**	**SN74S557**	★ 816
			605-9
74S558	**MMI**	**SN74S558**	★ 816
			605-10
74S570	**National**	**DM74S570**	★4057
			3761-42
		DM74S570A	★4057
			3761-43
74S571	**National**	**DM74S571**	★4057
			3761-45
		DM74S571A	★4057
			3761-46
		DM74S571B	★4057
			3761-47
74S572	**National**	**DM74S572**	★4057
			3762-113
		DM74S572A	★4057
			3762-85
74S573	**National**	**DM74S573**	★4057
			3762-118
		DM74S573A	★4057
			3762-90
		DM74S573B	★4057
			3762-74
74S593	TI	SN74S593	608-158
74S64	Fairchild	74S64	623-60
	Hitachi	HD74S64	623-61
	National	DM74S64	623-63
	Signetics	74S64	623-65
	TI	**SN74S64**	★ 941
			623-67
74S65	Fairchild	74S65	623-69
	Hitachi	HD74S65	623-70
	National	DM74S65	623-72
	TI	SN74S65	623-75
74S700	**MMI**	**SN74S700**	★ 804
			★ 819
			2683-106
74S730	MMI	74S730	1337-29
	MMI	**SN74S730**	★ 804
			★ 819
			2683-107
74S731	**MMI**	**SN74S731**	★ 804
			★ 819
			2683-108
74S734	MMI	74S734	1337-30
	MMI	**SN74S734**	★ 804
			★ 819
			2683-109

Base Number	Source	Device	Page-Line
74S74	Fairchild	74S74	615-28
	Hitachi	HD74S74	615-29
	National	DM74S74	615-30
	Signetics	74S74	615-32
	TI	SN74S74	615-34
74S740	TI	SN74S740	634-117
74S744	TI	SN74S744	634-71
74S85	Signetics	74S85	603-75
	TI	**SN74S85**	★ 950
			603-77
74S86	Fairchild	74S86	625-14
	Hitachi	HD74S86	625-15
	National	DM74S86	625-16
	Signetics	74S86	625-18
	TI	**SN74S86**	★ 950
			625-20
74SC137			
	GTEMicro	G74SC137	579-1
	Mitel	MD74SC137	579-3
	Plessey	MV74SC137	579-8
	Supertex	74SC137	579-14
74SC138			
	GTEMicro	G74SC138	578-148
	Mitel	MD74SC138	578-152
	SPI	SP74SC138	578-171
	Supertex	74SC138	578-180
74SC139			
	GTEMicro	G74SC139	578-106
	Mitel	MD74SC139	578-110
	SPI	SP74SC139	578-124
	Supertex	74SC139	578-131
74SC237			
	Plessey	MV74SC237	579-9
	Supertex	74SC237	579-15
74SC238			
	Supertex	74SC238	578-181
74SC239			
	Plessey	MV74SC239	578-116
	Supertex	74SC239	578-132
74SC240			
	GTEMicro	G74SC240	594-6
	Mitel	MD74SC240	594-10
	SPI	SP74SC240	594-28
	Supertex	74SC240	594-34
74SC241			
	GTEMicro	G74SC241	594-44
	Mitel	MD74SC241	594-48
	SPI	SP74SC241	594-64
	Supertex	74SC241	594-69
74SC242			
	Supertex	74SC242	593-78
74SC243			
	Supertex	74SC243	593-79
74SC244			
	GTEMicro	G74SC244	593-160
	Mitel	MD74SC244	593-164
	SPI	SP74SC244	593-181
	Supertex	74SC244	593-187
74SC245			
	GTEMicro	G74SC245	594-134
			2678-14
	Mitel	MD74SC245	594-138
			2678-34
	SPI	SP74SC245	594-151
	Supertex	74SC245	594-157
74SC373			
	GTEMicro	G74SC373	586-128
	Mitel	MD74SC373	586-192
	SPI	SP74SC373	586-165
	Supertex	74SC373	586-176
74SC374			
	GTEMicro	G74SC374	581-71
	Mitel	MD74SC374	581-78
	Plessey	MV74SC374	581-93
	SPI	SP74SC374	581-111
	Supertex	74SC374	581-122
74SC533			
	Plessey	MV74SC533	587-5
	Supertex	74SC533	587-25
74SC534			
	Supertex	74SC534	581-58
74SC540			
	Mitel	MD74SC540	573-101
	SPI	SP74SC540	573-125
	Supertex	74SC540	573-134

Base Number	Source	Device	Page-Line
74SC541			
	Mitel	MD74SC541	573-102
	SPI	SP74SC541	573-126
	Supertex	74SC541	573-135
74SC563			
	Plessey	MV74SC563	587-6
	Supertex	74SC563	587-26
74SC564			
	Supertex	74SC564	581-59
74SC573			
	Mitel	MD74SC573	586-136
	Plessey	MV74SC573	586-148
	SPI	SP74SC573	586-166
	Supertex	74SC573	586-177
74SC574			
	Mitel	MD74SC574	581-79
	Plessey	MV74SC574	581-94
	SPI	SP74SC574	581-112
	Supertex	74SC574	581-123
74SC670			
	SPI	SP74SC670	587-111
75	Amperex	BGY75	3170-63
	Burr-Brown	**PCM75**	★2849
			3164-35
			¶ 281-13
		PCM75J	★2849
			2636-40
			¶ 281-13
		PCM75K	★2849
			2636-30
			¶ 281-13
	NEC	uCOM-75	1339-70
	Rockwell	MM75	1339-72
			1263-6
750	AppMicroCir	Q750	4460-34
			4460-42
	ArrayTech	AT-D-750	4466-8
		AT-HSD-750	4462-38
	Cybernetic	CY750	1354-33
	Plessey	TBA750	3168-68
			3171-173
	Signetics	TBA750C	3168-91
			3172-11
7500	Sanyo	LC7500	3164-27
7501	**AD**	**AD7501J**	★2841
			2623-56
			¶ 290-9
		AD7501K	★2841
			2623-57
			¶ 290-9
		AD7501S	★2841
			2623-58
			¶ 290-9
	MicroPwr	**MP7501J**	★3047
			2623-65
		MP7501K	★3047
			2623-66
		MP7501S	★3047
			2623-25
	NEC	**μPD7501**	★1578
			1339-60
7502	**AD**	**AD7502J**	★2841
			2622-98
		AD7502K	★2841
			2622-99
		AD7502S	★2841
			2622-100
	MicroPwr	**MP7502J**	★3047
			2622-104
		MP7502K	★3047
			2622-105
		MP7502S	★3047
			2622-67
	NEC	**μPD7502**	★1578
			1339-61
	Toshiba	TA7502	3196-37
		TA7502A	3196-38
		TA7502B	3188-52
7503	**AD**	**AD7503J**	★2841
			2623-59
			¶ 290-9
		AD7503K	★2841
			2623-60
			¶ 290-9
		AD7503S	★2841
			2623-61
			(Continued)

Base Number	Source	Device	Page-Line
7503	**AD**	**AD7503S**	¶ 290-9
	MicroPwr	**MP7503J**	★3047
			2623-67
		MP7503K	★3047
			2623-68
		MP7503S	★3047
			2623-26
	NEC	**μPD7503**	★1578
			1339-62
7504	Toshiba	TA7504	3175-39
7506	**AD**	**AD7506J**	★2841
			2624-64
			¶ 290-9
		AD7506K	★2841
			2624-65
			¶ 290-9
		AD7506S	★2841
			2624-58
			¶ 290-9
		AD7506T	★2841
			2624-59
			¶ 290-9
	MicroPwr	**MP7506J**	★3047
			2624-56
		MP7506K	★3047
			2624-57
		MP7506S	★3047
			2624-44
	NEC	**μPD7506**	★1578
			1339-52
	Toshiba	TA7506	3175-24
75064	TI	SN75064	2682-79
75065	TI	SN75065	2682-121
75066	TI	SN75066	2682-80
75067	TI	SN75067	2682-122
75068	TI	SN75068	2682-81
75069	TI	SN75069	2682-123
7507	**AD**	**AD7507J**	★2841
			2624-14
			¶ 290-9
		AD7507K	★2841
			2624-15
			¶ 290-9
		AD7507S	★2841
			2624-7
			¶ 290-9
		AD7507T	★2841
			2624-8
			¶ 290-9
	MicroPwr	**MP7507J**	★3047
			2624-5
		MP7507K	★3047
			2624-6
		MP7507S	★3047
			2623-112
	NEC	**μPD7507**	★1578
			1339-53
		μPD7507S	★1578
			1339-54
7508	**MicroPwr**	**MP7508J**	★3047
			2623-69
		MP7508K	★3047
			2623-70
		MP7508S	★3047
			2623-27
	NEC	**μPD7508**	★1578
			1339-55
		μPD7508A	★1578
			1339-56
			1339-65
		μPD7508H	★1578
			1339-57
7509	**MicroPwr**	**MP7509J**	★3047
			2622-106
		MP7509K	★3047
			2622-107
		MP7509S	★3047
			2622-68
751	**NEC**	**μPC751**	★3543
			2679-35
	SGS	M751	3219-88
7510	AD	AD7510DIJ	2616-111
			¶ 290-9
		AD7510DIK	2616-112
			¶ 290-9
		AD7510DIS	2616-113
			(Continued)

Arranged alphanumerically from left to right.

© IC MASTER 1984

Base Number	Source	Device	Page-Line
7510	AD	AD7510DIS	¶ 290-9
	MicroPwr	**MP7510DIJ**	**★3047**
			2616-121
		MP7510DIK	**★3047**
			2616-122
		MP7510DIS	**★3047**
			2617-1
	PMI	SW-7510A	2617-87
		SW-7510B	2617-88
		SW-7510E	2617-89
		SW-7510F	2617-90
	Sanyo	LC7510	3169-122
	Thomson-CSF		
		EFB7510	3217-137
75107	Fairchild	75107A	2673-22
		75107B	2673-39
	Hitachi	HD75107A	2673-23
	Motorola	MC75107	2673-25
			¶ 285-6
			¶ 288-14
	National	DS75107	2673-27
			2673-41
	TI	SN75107A	2673-29
		SN75107B	2673-43
75108	Fairchild	75108B	2673-44
	Hitachi	HD75108A	2673-30
	Motorola	MC75108	2673-32
	National	DS75108	2673-34
			2673-46
	TI	SN75108A	2673-36
		SN75108B	2673-48
75109	Hitachi	HD75109	2671-5
	Motorola	MC75109	2671-6
7511	AD	AD7511DIJ	2616-114
			¶ 290-9
		AD7511DIK	2616-115
			¶ 290-9
		AD7511DIS	2616-116
			¶ 290-9
		AD7511DIT	2616-117
			¶ 290-9
	MicroPwr	**MP7511DIJ**	**★3047**
			2617-2
		MP7511DIK	**★3047**
			2617-3
		MP7511DIS	**★3047**
			2617-4
		MP7511DIT	**★3047**
			2617-5
	National	DM7511	614-147
	PMI	SW-7511A	2617-91
		SW-7511B	2617-92
		SW-7511E	2617-93
		SW-7511F	2617-94
75110	Fairchild	75110A	2671-10
	Hitachi	HD75110	2671-11
	Motorola	MC75110	2671-12
			¶ 288-14
	TI	SN75110A	2671-15
75112	TI	SN75112	2671-16
75113	National	DS75113	2670-58
	TI	SN75113	2670-60
75114	National	DS75114	2670-33
	TI	SN75114	2670-36
75115	National	DS75115	2673-62
	TI	SN75115	2674-2
75116	TI	SN75116	2678-51
75117	TI	SN75117	2678-57
75118	TI	SN75118	2678-53
75119	TI	SN75119	2678-55
7512	AD	AD7512DIJ	2619-2
		AD7512DIK	2619-3
		AD7512DIS	2619-4
		AD7512DIT	2619-5
	MicroPwr	**MP7512DIJ**	**★3047**
			2619-6
		MP7512DIK	**★3047**
			2619-7
		MP7512DIS	**★3047**
			2619-8
		MP7512DIT	**★3047**
			2619-9
	National	DM7512	617-40
	Sanyo	LC7512	3169-123
75121	National	DS75121	2668-8
	TI	SN75121	2668-13
75122	National	DS75122	2672-20
	TI	SN75122	2672-23
75123	National	DS75123	2668-2
	TI	SN75123	2668-5
75124	National	DS75124	2672-14
	TI	SN75124	2672-16
75125	**Motorola**	**MC75125**	**★3064**
			2673-1
	National	DS75125	2673-3
	TI	SN75125	2673-5
75126	TI	SN75126	2668-39
75127	Motorola	MC75127	2673-2
	National	DS75127	2673-4
	TI	SN75127	2673-6
75128	Motorola	MC75128	2673-7
	National	DS75128	2673-9
	TI	SN75128	2673-11
75129	Motorola	MC75129	2673-8
	National	DS75129	2673-10
	TI	SN75129	2673-12
75130	TI	SN75130	2668-40
75136	TI	SN75136	638-100
			2676-12
75138	TI	SN75138	2676-62
7514	**NEC**	**μPD7514**	**★1578**
			1339-63
75140	TI	SN75140	2672-8
75141	TI	SN75141	2672-9
75142	TI	SN75142A	2672-4
75143	TI	SN75143A	2672-5
75150	Fairchild	75150	2668-19
	National	DS75150	2668-20
	TI	SN75150	2668-22
75151	TI	SN75151	2671-44
75152	TI	SN75152	2674-13
75153	TI	SN75153	2671-45
75154	Fairchild	75154	2672-55
	Hitachi	HD75154	2672-27
	National	DS75154	2672-56
	SiliconG	SG75154	2672-57
	TI	SN75154	2672-59
75157	TI	SN75157	2673-56
75158	TI	SN75158	2670-38
75159	TI	SN75159	2671-3
75160	National	DS75160A	2677-2
	TI	SN75160A	2678-36
75161	National	DS75161A	2677-3
	TI	SN75161A	2678-37
75162	National	DS75162A	2677-4
	TI	SN75162A	2678-38
75163	TI	SN75163	2678-39
75172	**Motorola**	**SN75172**	**★3064**
	TI	SN75172	2668-42
75173	**Motorola**	**SN75173**	**★3064**
	TI	SN75173	2674-32
75174	**Motorola**	**SN75174**	**★3064**
	TI	SN75174	2668-41
75175	**Motorola**	**SN75175**	**★3064**
	TI	SN75175	2674-33
75176	**Motorola**	**SN75176**	**★3064**
			2678-44
	TI	SN75176A	2678-47
75177	Motorola	SN75177	2678-45
	TI	SN75177	2678-48
75178	Motorola	SN75178	2678-46
	TI	SN75178	2678-49
75182	TI	SN75182	2674-8
75183	TI	SN75183	2670-51
75188	Hitachi	HD75188	2668-50
	TI	SN75188	2668-57
75189	Hitachi	HD75189	2672-36
	TI	SN75189	2672-33
		SN75189A	2672-47
7519	AD	AD7519J	2619-81
			¶ 290-9
	NEC	**μPD7519**	**★1578**
			1339-51
			1339-66
752	**NEC**	**μPC752**	**★3543**
			2679-36
7520	**AD**	**AD7520J**	**★2825**
			2646-34
			¶ 280-15
			¶ 284-15
		AD7520K	**★2825**
			2645-54
			(Continued)
7520	**AD**	**AD7520K**	¶ 280-15
			¶ 284-15
		AD7520L	**★2825**
			2644-23
			¶ 280-15
			¶ 284-15
		AD7520S	**★2825**
			2646-35
			¶ 280-15
			¶ 284-15
		AD7520T	**★2825**
			2646-1
			¶ 280-15
			¶ 284-15
		AD7520U	**★2825**
			2644-24
			¶ 280-15
			¶ 284-15
	Intersil	AD7520J	2646-37
		AD7520K	2646-3
		AD7520L	2644-26
		AD7520S	2646-38
		AD7520T	2646-4
		AD7520U	2644-27
	MicroPwr	**MP7520G**	**★3046**
			2647-19
		MP7520H	**★3046**
			2647-13
		MP7520J	**★3046**
			2646-40
		MP7520K	**★3046**
			2646-6
		MP7520L	**★3046**
			2644-29
		MP7520Q	**★3046**
			2645-52
		MP7520R	**★3046**
			2645-38
		MP7520S	**★3046**
			2646-41
		MP7520T	**★3046**
			2646-7
		MP7520U	**★3046**
			2644-30
		MP7520W	**★3046**
			2645-53
		MP7520Y	**★3046**
			2645-39
	National	AD7520J	2647-7
		AD7520K	2646-27
		AD7520L	2645-21
		AD7520S	2647-8
		AD7520T	2646-28
		AD7520U	2645-22
	NEC	**μPD7520**	**★1578**
			1339-64
	NEC	uPD7520	1261-10
	SiliconG	SG7520	2684-8
75207	National	DS75207	2673-14
			2684-50
	TI	SN75207	2673-16
			2684-52
			¶ 290-2
		SN75207B	2673-19
			¶ 290-2
75208	National	DS75208	2673-15
			2684-51
	TI	SN75208	2673-17
			2684-53
		SN75208B	2673-20
7521	**AD**	**AD7521J**	**★2825**
			2656-16
			¶ 280-15
			¶ 284-15
		AD7521K	**★2825**
			2656-3
			¶ 280-15
			¶ 284-15
		AD7521L	**★2825**
			2655-28
			¶ 280-15
			¶ 284-15
		AD7521S	**★2825**
			2656-17
			¶ 280-15
			¶ 284-15
			(Continued)
7521	**AD**	**AD7521T**	**★2825**
			2656-4
			¶ 280-15
			¶ 284-15
		AD7521U	**★2825**
			2655-29
			¶ 280-15
			¶ 284-15
	Intersil	AD7521J	2656-19
		AD7521K	2656-6
		AD7521L	2655-30
		AD7521S	2656-20
		AD7521T	2656-7
		AD7521U	2655-31
	MicroPwr	**MP7521J**	**★3046**
			2656-22
		MP7521K	**★3046**
			2656-9
		MP7521L	**★3046**
			2655-33
		MP7521S	**★3046**
			2656-23
		MP7521T	**★3046**
			2656-10
		MP7521U	**★3046**
			2655-34
	National	AD7521J	2656-25
		AD7521K	2656-12
		AD7521L	2656-1
		AD7521S	2656-26
		AD7521T	2656-13
		AD7521U	2656-2
	SiliconG	SG7521	2684-9
7522	**AD**	**AD7522J**	**★2825**
			2646-47
			¶ 280-15
			¶ 284-15
		AD7522K	**★2825**
			2646-13
			¶ 280-15
			¶ 284-15
		AD7522L	**★2825**
			2644-36
			¶ 280-15
			¶ 284-15
		AD7522S	**★2825**
			2646-48
			¶ 280-15
			¶ 284-15
		AD7522T	**★2825**
			2646-14
			¶ 280-15
			¶ 284-15
		AD7522U	**★2825**
			2644-37
			¶ 280-15
			¶ 284-15
	MicroPwr	**MP7522J**	**★3046**
			2646-49
		MP7522K	**★3046**
			2646-15
		MP7522L	**★3046**
			2644-38
		MP7522S	**★3046**
			2646-50
		MP7522T	**★3046**
			2646-16
		MP7522U	**★3046**
			2644-39
	SiliconG	SG7522	2684-44
7523	**AD**	**AD7523J**	**★2825**
			2640-28
			¶ 280-15
		AD7523K	**★2825**
			2639-26
			¶ 280-15
		AD7523L	**★2825**
			2638-41
			¶ 280-15
		AD7523S	**★2825**
			2640-29
			¶ 280-15
	Datel	**DAC-7523**	**★2863**
			2640-55
	Intersil	AD7523J	2639-1
		AD7523K	2639-27
			(Continued)

¶ Indicates page number in Application Note Directory.
★ Indicates addition data is provided on the page noted.

Base Number	Source	Device	Page-Line
7523	Intersil	AD7523L	2638-42
		AD7523S	2639-2
		AD7523T	2639-28
		AD7523U	2638-43
	MicroPwr	MP7523J	★3046
			2640-30
		MP7523K	★3046
			2639-29
		MP7523L	★3046
			2638-44
	SiliconG	SG7523	2684-45
75234	TI	SN75234	2684-18
75236	SiliconG	SG75236	2684-12
75239	Fairchild	75239	2684-19
7524	AD	AD7524A	★2825
			2644-12
			2640-43
			¶ 280-15
			¶ 284-15
		AD7524B	★2825
			2644-13
			2639-31
			¶ 280-15
			¶ 284-15
		AD7524C	★2825
			2644-14
			2638-46
			¶ 280-15
			¶ 284-15
		AD7524J	★2825
			2645-47
			2640-44
			¶ 280-15
			¶ 284-15
		AD7524K	★2825
			2644-15
			2639-32
			¶ 280-15
			¶ 284-15
		AD7524L	★2825
			2645-48
			2638-47
			¶ 280-15
			¶ 284-15
		AD7524S	★2825
			2644-16
			2640-45
			¶ 280-15
			¶ 284-15
		AD7524T	★2825
			2639-33
			¶ 280-15
			¶ 284-15
		AD7524U	★2825
			2638-48
			¶ 280-15
			¶ 284-15
	MicroPwr	MP7524A	★3046
			2640-31
		MP7524B	★3046
			2639-30
		MP7524C	★3046
			2638-45
		MP7524J	★3046
			2640-46
		MP7524K	★3046
			2639-34
		MP7524L	★3046
			2638-49
		MP7524S	★3046
			2640-47
		MP7524T	★3046
			2639-35
		MP7524U	★3046
			2638-50
	SiliconG	SG7524	2684-34
7525	AD	AD7525K	★2827
			★2829
			3232-66
			3235-132
			¶ 284-15
		AD7525L	★2827
			★2829
			3235-133
			¶ 284-15
		AD7525T	★2827
			★2829
			3232-67
			3235-134
			¶ 284-15
		AD7525U	★2827
			★2829
			3235-135
			(Continued)

Base Number	Source	Device	Page-Line
7525	AD	AD7525U	¶ 284-15
	MicroPwr	MP7525B	3232-68
		MP7525K	3232-69
		MP7525T	3232-70
	SiliconG	SG7525	2684-35
7527	AD	AD7527B	★2825
			2645-46
			¶ 282-14
			¶ 282-15
		AD7527C	★2825
			2644-11
			¶ 282-14
			¶ 282-15
		AD7527GC	★2825
			2644-12
			¶ 282-14
			¶ 282-15
		AD7527GL	★2825
			2644-13
			¶ 282-14
			¶ 282-15
		AD7527GU	★2825
			2644-14
			¶ 282-14
			¶ 282-15
		AD7527K	★2825
			2645-47
			¶ 282-14
			¶ 282-15
		AD7527L	★2825
			2644-15
			¶ 282-14
			¶ 282-15
		AD7527T	★2825
			2645-48
			¶ 282-14
			¶ 282-15
		AD7527U	★2825
			2644-16
			¶ 282-14
			¶ 282-15
	NEC	μPD7527	★1578
			1339-71
75270	TI	SN75270	636-136
			¶ 290-2
			2681-7
7528	AD	AD7528J	★2819
			★2825
			2642-33
		AD7528K	★2819
			★2825
			2641-2
		AD7528L	★2819
			★2825
			2641-3
		AD7528S	★2819
			★2825
			2642-34
		AD7528T	★2819
			★2825
			2641-4
		AD7528U	★2819
			★2825
			2641-5
	MicroPwr	MP7528	★3046
	NEC	μPD7528	★1578
			1339-58
			1339-67
	SiliconG	SG7528	2684-39
7529	SiliconG	SG7529	2684-40
7530	AD	AD7530J	★2825
			2646-36
			¶ 280-15
			¶ 284-15
		AD7530K	★2825
			2646-2
			¶ 280-15
			¶ 284-15
		AD7530L	★2825
			2644-25
			¶ 280-15
			¶ 284-15
	Intersil	AD7530J	2646-39
		AD7530K	2646-5
		AD7530L	2644-28
	MicroPwr	MP7530	★3046
			(Continued)

Base Number	Source	Device	Page-Line
7530	MicroPwr	MP7530	2644-31
		MP7530J	★3046
			2646-42
		MP7530K	★3046
			2646-8
7531	AD	AD7531J	★2825
			2656-18
			¶ 280-15
			¶ 284-15
		AD7531K	★2825
			2656-5
			¶ 280-15
			¶ 284-15
	Intersil	AD7531J	2656-21
		AD7531K	2656-8
		AD7531L	2655-32
	MicroPwr	MP7531J	★3046
			2656-24
		MP7531K	★3046
			2656-11
		MP7531L	★3046
			2655-35
75322	TI	SN75322	2681-29
75325	Motorola	MC75325	2680-72
	National	DS75325	2680-74
	SiliconG	SG75325	2680-76
	TI	SN75325	2680-78
75326	SiliconG	SG75326	2680-81
	TI	SN75326	2680-85
75327	SiliconG	SG75327	2680-82
	TI	SN75327	2680-86
7533	AD	AD7533A	★2825
			2646-51
			¶ 280-15
			¶ 284-15
		AD7533B	★2825
			2646-17
			¶ 280-15
			¶ 284-15
		AD7533C	★2825
			2644-40
			¶ 280-15
			¶ 284-15
		AD7533J	★2825
			2646-52
			¶ 280-15
			¶ 284-15
		AD7533K	★2825
			2646-18
			¶ 280-15
			¶ 284-15
		AD7533L	★2825
			2644-41
			¶ 280-15
			¶ 284-15
		AD7533S	★2825
			2646-53
			¶ 280-15
			¶ 284-15
		AD7533T	★2825
			2646-19
			¶ 280-15
			¶ 284-15
		AD7533U	★2825
			2644-42
			¶ 280-15
			¶ 284-15
	Datel	DAC-7533	★2863
			2645-40
	Intersil	AD7533J	2646-54
		AD7533K	2646-20
		AD7533L	2644-43
		AD7533S	2647-1
		AD7533T	2646-21
		AD7533U	2644-44
	MicroPwr	MP7533K	★3046
			2646-22
		MP7533L	★3046
			2644-45
		MP7533Q	★3046
			2643-46
		MP7533R	★3046
			2643-35
		MP7533S	★3046
			2647-2
		MP7533T	★3046
			(Continued)

Base Number	Source	Device	Page-Line
7533	MicroPwr	MP7533T	2647-3
			2647-4
		MP7533U	★3046
			2644-46
		MP7533W	★3046
			2643-47
		MP7533Y	★3046
			2643-36
7534	SiliconG	SG7534	2684-22
7535	SiliconG	SG7535	2684-23
75350	TI	SN75350	2682-65
75358	Motorola	MC75358	598-100
			2681-34
75361	National	DS75361	2682-62
	TI	SN75361A	2682-66
75362	National	DS75362	2682-63
75363	TI	SN75363	2681-30
75365	National	DS75365	2682-164
	TI	SN75365	2683-2
			¶ 321-17
75367	TI	SN75367	636-128
			2683-36
75369	TI	SN75369	2681-56
7537	NEC	μPD7537	★1578
			1339-68
7538	NEC	μPD7538	★1578
			1339-59
			1339-69
	SiliconG	SG7538	2684-27
7539	SiliconG	SG7539	2684-28
754	NEC	μPC754	★3547
			3155-40
	TI	TMSW754P	★2055
75401	TI	SN75401	2681-96
75402	TI	SN75402	2681-135
75403	TI	SN75403	2682-39
75404	TI	SN75404	2682-6
75407	TI	SN75407	2681-136
			2682-7
75408	TI	SN75408	2682-40
7541	AD	AD7541A	★2825
			★2827
			★3351
			2653-36
			¶ 284-15
		AD7541B	★2825
			★2827
			★3351
			2650-45
			¶ 284-15
		AD7541J	★2825
			★2827
			★3351
			2653-37
			¶ 284-15
		AD7541K	★2825
			★2827
			★3351
			2650-46
			¶ 284-15
		AD7541S	★2825
			★2827
			★3351
			2654-9
			¶ 284-15
		AD7541T	★2825
			★2827
			★3351
			2650-47
			¶ 284-15
	Datel	DAC-7541	★2863
			2651-14
	Harris	HI7541J	★2953
			2651-12
		HI7541K	★2953
			2648-29
		HI7541S	★2953
			2651-13
		HI7541T	★2953
			2648-30
	HybridSys	HS7541-4	2651-11
		HS7541B-1	2653-49
		HS7541B-2	2651-6
		HS7541C-1	2653-50
		HS7541C-2	2651-7
	Intersil	AD7541A	2653-38
			(Continued)

Arranged alphanumerically from left to right.

Base Number	Source	Device	Page-Line
7541	Intersil	AD7541B	2650-48
		AD7541J	2653-39
		AD7541K	2650-49
		AD7541L	2654-10
		AD7541S	2654-11
		AD7541T	2650-50
	MicroPwr	**MP7541A**	★3046
			2653-33
		MP7541B	★3046
			2650-43
		MP7541J	★3046
			2653-34
		MP7541K	★3046
			2650-44
		MP7541S	★3046
			2653-35
		MP7541T	★3046
			2650-42
	TeledyneP	TDP7541A	2654-16
		TDP7541B	2651-18
		TDP7541J	2654-17
		TDP7541K	2651-19
		TDP7541T	2651-20
	TeledyneS	7541S	2653-43
		7541T	2651-1
		TSC7541A	2653-45
		TSC7541B	2651-2
		TSC7541J	2653-46
		TSC7541K	2651-3
75411	TI	SN75411	2681-97
75412	TI	SN75412	2681-137
75413	TI	SN75413	2682-41
75414	TI	SN75414	2682-8
75415	TeledyneP	TDP75415	2654-15
75416	TI	SN75416	2681-109
75417	TI	SN75417	2681-148
75418	TI	SN75418	2682-52
75419	TI	SN75419	2682-18
7542	**AD**	**AD7542A**	★2827
			2654-27
			¶ 282-14
			¶ 282-15
		AD7542B	★2827
			2651-35
			¶ 282-14
			¶ 282-15
		AD7542J	★2827
			2654-28
			¶ 282-14
			¶ 282-15
		AD7542K	★2827
			2651-36
			¶ 282-14
			¶ 282-15
		AD7542S	★2827
			2654-29
			¶ 282-14
			¶ 282-15
		AD7542T	★2827
			2651-37
			¶ 282-14
			¶ 282-15
	Harris	MP7542S	2654-32
	MicroPwr	**MP7542A**	★3046
			2654-33
		MP7542B	★3046
			2655-3
		MP7542J	★3046
			2654-37
		MP7542K	★3046
			2655-8
		MP7542T	★3046
			2655-4
	National	DM7542	615-81
75426	TI	SN75426B	2662-96
75427	TI	SN75427B	2662-97
7543	**AD**	**AD7543A**	★2827
			2654-30
		AD7543B	★2827
			2651-38
		AD7543J	★2827
			2654-31
		AD7543K	★2827
			2651-39
	MicroPwr	**MP7543A**	★3046
			2654-34
			(Continued)

Base Number	Source	Device	Page-Line
7543	**MicroPwr**	**MP7543B**	★3046
			2655-5
		MP7543J	★3046
			2654-35
		MP7543K	★3046
			2655-6
		MP7543S	★3046
			2654-36
		MP7543T	★3046
			2655-7
75430	TI	SN75430	2681-32
75431	TI	SN75431	2681-33
75432	TI	SN75432	2681-138
75433	TI	SN75433	2682-42
75434	TI	SN75434	2682-9
75436	TI	SN75436	2682-140
75437	TI	SN75437A	2682-141
75438	TI	SN75438	2682-142
7544	**AD**	**AD7544A**	★2827
			2653-30
			¶ 283-8
		AD7544B	★2827
			2649-16
			¶ 283-8
		AD7544BG	★2827
			2649-17
			¶ 283-8
		AD7544GK	★2827
			2649-18
			¶ 283-8
		AD7544GT	★2827
			2649-19
			¶ 283-8
		AD7544J	★2827
			2653-31
			¶ 283-8
		AD7544K	★2827
			2649-20
			¶ 283-8
		AD7544S	★2827
			2653-32
			¶ 283-8
		AD7544T	★2827
			2649-21
			¶ 283-8
	National	DM7544	636-140
75441	TI	SN75441	2681-39
			2682-48
75446	TI	SN75446	2681-108
75447	TI	SN75447	2681-139
75448	TI	SN75448	2682-43
75449	TI	SN75449	2682-10
7545	**AD**	**AD7545A**	★2821
			★2827
			★2827
		AD7545B	★2821
			★2827
			★2827
		AD7545C	★2821
			★2827
			★2827
			2648-37
		AD7545GC	★2821
			★2827
			★2827
			2648-38
		AD7545GL	★2821
			★2827
			★2827
			2648-39
		AD7545GU	★2821
			★2827
			★2827
			2648-40
		AD7545J	★2821
			★2827
			★2827
			2655-15
		AD7545K	★2821
			★2827
			★2827
			2653-27
		AD7545L	★2821
			★2827
			(Continued)

Base Number	Source	Device	Page-Line
7545	**AD**	**AD7545L**	★2827
			2648-41
		AD7545S	★2821
			★2827
			★2827
			2655-16
		AD7545T	★2821
			★2827
			★2827
			2653-28
		AD7545U	★2821
			★2827
			★2827
			2648-42
75450	Fairchild	75450B	2681-64
	Hitachi	HD75450A	2681-69
	National	DS75450	2681-74
	SiliconG	SG75450	2681-84
		SG75450B	2681-85
	TI	SN75450B	2681-98
			¶ 290-2
75451	Fairchild	75451A	2681-65
		75451B	2681-66
	Hitachi	HD75451A	2681-70
	National	DS75451	2681-75
	SiliconG	SG75451	2681-86
	TI	SN75451B	2681-99
			¶ 290-2
75452	Fairchild	75452A	2681-119
		75452B	2681-120
	Hitachi	HD75452	2681-123
	National	DS75452	2681-126
			¶ 287-6
	SiliconG	SG75452	2681-130
	TI	SN75452B	2681-140
75453	Fairchild	75453A/B	2682-25
	Hitachi	HD75453	2682-26
	Motorola	MC75453	2682-27
	National	DS75453	2682-30
	SiliconG	SG75453	2682-34
	TI	SN75453B	2682-44
75454	Hitachi	HD75454	2681-156
	National	DS75454	2681-159
	SiliconG	SG75454	2682-1
	TI	SN75454B	2682-11
75458	Toshiba	TA75458	3207-52
7546	**AD**	**AD7546A**	★2827
			★2829
			2658-25
		AD7546B	★2827
			★2829
			2658-15
		AD7546J	★2827
			★2829
			2658-26
		AD7546K	★2827
			★2829
			2658-16
	National	DM7546	632-159
			3789-107
75460	SiliconG	SG75460	2681-87
		SG75460B	2681-88
	TI	SN75460	2681-100
75461	Fairchild	75461	2681-67
	National	DS75461	2681-76
	SiliconG	SG75461	2681-89
	TI	SN75461	2681-101
75462	Fairchild	75462	2681-121
	National	DS75462	2681-127
	SiliconG	SG75462	2681-131
	TI	SN75462	2681-141
75463	National	DS75463	2682-31
	SiliconG	SG75463	2682-35
	TI	SN75463	2682-45
75464	National	DS75464	2681-160
	SiliconG	SG75464	2682-2
	TI	SN75464	2682-12
75465	TI	SN75465	3158-6
75466	TI	SN75466	2679-137
			3158-65
75467	TI	SN75467	2679-155
			3158-66
75468	TI	SN75468	2679-118
			3158-7
75469	TI	SN75469	2679-89
			3158-8

Base Number	Source	Device	Page-Line
75470	TI	SN75470	2679-138
75471	Fairchild	75471	2681-68
	TI	SN75471	2681-104
75472	Fairchild	75472	2681-122
	TI	SN75472	2681-142
75473	TI	SN75473	2682-46
75474	Fairchild	75474B	2681-155
	TI	SN75474	2682-13
75476	TI	SN75476	2681-105
75477	TI	SN75477	2681-147
75478	TI	SN75478	2682-47
			2682-51
75479	TI	SN75479	2682-14
			2682-17
7548	**AD**	**AD7548J**	★2822
			★2827
			2642-20
		AD7548K	★2822
			★2827
			2640-2
		AD7548S	★2822
			★2827
			2642-21
		AD7548T	★2822
			★2827
			2640-3
75480	TI	SN75480	2663-81
75490	TI	SN75490	2681-8
75491	Fairchild	75491	2663-12
	Motorola	MC75491	2663-13
	National	DS75491	2663-15
			¶ 288-8
	TI	SN75491	2663-17
		SN75491A	2663-18
75492	Fairchild	75492	2663-48
		75492A	2663-49
	Motorola	MC75492	2663-50
	National	DS75492	2663-51
			¶ 288-8
	TI	SN75492	2663-56
		SN75492A	2663-57
75493	National	DS75493	2663-16
75494	National	DS75494	2663-52
	TI	SN75494	2663-58
75497	TI	SN75497	2663-69
75498	TI	SN75498	2663-135
755	SGS	M755	3171-138
7550	**AD**	**AD7550B**	★2838
			2635-41
	MicroPwr	**MP7550B**	★3046
			2635-40
75500	TI	SN75500A	2664-18
75501	TI	SN75501C	2664-19
			¶ 287-15
7551	National	DM7551	615-126
			¶ 258-15
75512	TI	SN75512A	2663-147
			¶ 287-15
75513	TI	SN75513A	2663-148
			¶ 287-15
75514	TI	SN75514	2663-149
75518	TI	SN75518	2664-20
7552	**AD**	**AD7552**	★2838
			2635-18
	National	DM7552	611-164
7553	National	DM7553	626-142
7554	National	DM7554	611-149
7555	**AD**	**AD7555**	★2838
			3232-30
	Intersil	**ICM7555**	★3527
			3220-58
		ICM7555M	★3527
			3220-59
	National	DM7555	610-19
	Sanyo	LC7555	3234-118
75551	TI	SN75551	2661-38
75552	TI	SN75552	2661-36
75553	TI	SN75553	2661-37
75554	TI	SN75554	2661-35
7556	**Intersil**	**ICM7556**	★3527
			3220-64
		ICM7556M	★3527
			3220-65
	National	DM7556	607-176
	Sanyo	LC7556	3234-119
75581	TI	SN75581	2663-71

¶ Indicates page number in Application Note Directory.
★ Indicates addition data is provided on the page noted.

Base Number	Source	Device	Page-Line
75584	TI	SN75584A	2663-75
75590	TI	SN75590	2681-9
756	SGS	M756	3171-139
7560	National	DM7560	611-39
75603	TI	SN75603	3234-145
75604	TI	SN75604	3234-146
7563	National	DM7563	609-87
757	Fairchild	uA757	3167-142
7570	AD	AD7570J	2627-4
		AD7570L	2629-48
	MicroPwr	MP7570J	★3046
			2627-5
		MP7570L	★3046
			2629-49
	National	DM7570	632-27
			3790-95
7571	AD	AD7571J	★2834
			★2838
			2630-14
		AD7571K	★2834
			★2838
			2630-12
		AD7571S	★2834
			★2838
			2630-15
		AD7571T	★2834
			★2838
			2630-13
7573	AD	AD7573J	★2835
			★2838
			2630-8
		AD7573K	★2835
			★2838
			2629-46
		AD7573S	★2835
			★2838
			2630-9
		AD7573T	★2835
			★2838
			2629-47
7574	AD	AD7574A	★2838
			2627-47
		AD7574B	★2838
			2626-48
		AD7574J	★2838
			2627-48
		AD7574K	★2838
			2626-49
		AD7574S	★2838
			2627-49
		AD7574T	★2838
			2626-50
	MicroPwr	MP7574A	★3046
			2627-50
		MP7574B	★3046
			2626-51
		MP7574J	★3046
			2627-51
		MP7574K	★3046
			2626-52
		MP7574S	★3046
			2627-52
		MP7574T	★3046
			2626-53
75747	Toshiba	TA75747	3207-53
7575	National	DM7575	4484-36
7576	National	DM7576	4484-37
758	Motorola	uA758A	3168-133
	RCA	CA758	3168-142
	Signetics	uA758	3168-157
7581	AD	AD7581A	★2838
			3233-18
	AD	AD7581A	1345-101
			1346-112
			1348-71
	AD	AD7581B	★2838
			3233-19
	AD	AD7581B	1345-102
			1346-113
			1348-72
	AD	AD7581C	★2838
			3233-20
	AD	AD7581C	1345-103
			1346-114
			1348-73
	AD	AD7581J	★2838
			(Continued)

Base Number	Source	Device	Page-Line
7581	AD	AD7581J	3233-21
	AD	AD7581J	1345-104
			1346-115
			1348-74
	AD	AD7581K	★2838
			2628-1
	AD	AD7581K	3233-22
			1345-105
			1346-116
			1348-75
	AD	AD7581L	★2838
			3233-23
	AD	AD7581L	1345-106
			1346-117
			1348-76
	MicroPwr	MP7581A	★3046
			3233-25
		MP7581B	★3046
			3233-26
		MP7581C	★3046
			3233-27
		MP7581J	★3046
			3233-28
		MP7581K	★3046
			3233-29
		MP7581L	★3046
			3233-30
		MP7581T	★3046
			3233-31
		MP7581U	★3046
			3233-32
75815	MicroPwr	MP75815	3233-24
7583	AD	AD7583K	2628-38
7589	National	DM7589	627-59
			3771-39
759	Fairchild	uA759	3175-90
			3193-16
		uA759C	3175-91
			3198-36
7590	AD	AD7590DIB	2616-103
		AD7590DIK	2616-104
	National	DM7590	3790-25
75902	Toshiba	TA75902	3180-44
7591	AD	AD7591DIB	2616-105
		AD7591DIK	2616-106
7592	AD	AD7592DIB	2615-82
		AD7592DIK	2615-83
7599	National	DM7599	627-67
			3771-38
75AS153			
	TI	SN75AS153	★ 972
75HC132			
	SPI	SP75HC132	593-105
75HC165			
	SPI	SP75HC165	591-81
75LS15	Panasonic	DN75LS15	618-163
75S06	National	DM75S06	3760-12
75S07	National	DM75S07	3760-13
		DM75S07A	3760-9
75S110	Motorola	MC75S110	2671-13
75S20	Fairchild	75S20	2684-5
75S234	Fairchild	75S234	2684-16
75S24	Fairchild	75S24	2684-30
75S28	National	DM75S28	3783-42
75S29	National	DM75S29	3783-41
75S50	National	DM75S50	611-170
76	Burr-Brown	ADC76J	★2848
			2636-41
		ADC76K	★2848
			2636-31
		ATF76	★2852
			3232-9
	Rockwell	MM76EL	1339-73
			1263-7
760	Fairchild	uA760C	3160-19
		uA760M	3160-20
	SGS	M760	3217-2
		M760A	3217-3
7600	Intersil	ICL7600C	3181-7
		ICL7600M	3181-8
76000	TI	SN76000	3164-127
76002	TI	SN76002	3164-128
76005	TI	SN76005	3165-13
7601	Intersil	ICL7601C	3181-9
		ICL7601M	3181-10
76011	TI	SN76011	3164-129

Base Number	Source	Device	Page-Line
7602	Harris	HM7602-2	★3943
			3760-50
		HM7602-5	★3943
			3760-38
76021	TI	SN76021	3164-130
76024	TI	SN76024	3164-131
7603	Harris	HM7603-2	★3943
			3760-52
		HM7603-5	★3943
			3760-44
7604	Toshiba	TA7604A	3168-170
7605	Intersil	ICL7605C	3155-55
		ICL7605M	3155-56
7606	Intersil	ICL7606C	3155-57
		ICL7606M	3155-58
	Toshiba	TA7606	3239-110
7607	Toshiba	TA7607A	3171-32
761	SGS	M761	3217-17
		M761A	3217-18
	Siemens	TAA761	3176-29
			3199-15
7610	Harris	HM7610-2	★3944
			3760-118
		HM7610-5	★3944
			3760-102
		HM7610A-2	★3944
			3760-109
		HM7610A-5	★3944
			3760-78
		HM7610B-2	★3944
			3760-85
		HM7610B-5	★3944
			3760-71
76104	TI	SN76104	3168-161
76105	TI	SN76105	3168-162
7611	Harris	HM7611-2	★3944
			3760-122
		HM7611-5	★3944
			3760-107
		HM7611A-2	★3944
			3760-112
		HM7611A-5	★3944
			3760-81
		HM7611B-2	★3944
			3760-88
		HM7611B-5	★3944
			3760-72
	Intersil	ICL7611AC	★3481
			3189-59
		ICL7611AM	★3481
			3189-60
		ICL7611BC	★3481
			3194-34
		ICL7611BM	★3481
			3194-35
		ICL7611C	★3481
			3202-13
		ICL7611M	★3481
			3195-38
	Toshiba	TA7611A	3171-33
76110	TI	SN76110	3168-163
76111	TI	SN76111	3168-164
76113	TI	SN76113	3168-165
76115	TI	SN76115	3168-166
76116	TI	SN76116	3168-167
7612	Intersil	ICL7612AC	★3481
			3189-61
		ICL7612AM	★3481
			3189-62
		ICL7612BC	★3481
			3194-36
		ICL7612BM	★3481
			3194-37
		ICL7612C	★3481
			3202-14
		ICL7612M	★3481
			3195-42
	Toshiba	TA7612A	2661-57
7613	Intersil	ICL7613AC	★3481
			3190-1
		ICL7613BC	★3481
			3194-38
		ICL7613BM	★3481
			3194-39
		ICL7613C	★3481
			3195-43
			(Continued)

Base Number	Source	Device	Page-Line
7613	Intersil	ICL7613DC	★3481
			3202-15
		ICL7613M	★3481
			3195-44
	National	DM7613	614-148
	Toshiba	TA7613	3168-19
76130	TI	SN76130	3165-174
76131	TI	SN76131	3165-175
7614	Intersil	ICL7614AC	★3481
			3190-2
		ICL7614AM	★3481
			3190-3
		ICL7614BC	★3481
			3194-40
		ICL7614BM	★3481
			3194-41
		ICL7614C	★3481
			3195-45
		ICL7614DC	★3481
			3202-16
	MicroPwr	MP7614J	★3046
			2658-2
		MP7614K	★3046
			2657-49
		MP7614S	★3046
			2658-3
		MP7614T	★3046
			2657-50
	Toshiba	TA7614	3168-20
76149	TI	SN76149	3165-176
7615	Intersil	ICL7615	★3481
			3190-4
		ICL7615AC	★3481
			3190-5
		ICL7615BC	★3481
			3194-42
		ICL7615BM	★3481
			3194-43
		ICL7615C	★3481
			3195-46
		ICL7615DC	★3481
			3202-17
	Toshiba	TA7615	3167-122
7616	MicroPwr	MP7616J	★3046
			2659-24
		MP7616K	★3046
			2659-28
		MP7616L	★3046
			2659-23
		MP7616S	★3046
			2659-25
		MP7616T	★3046
			2658-46
	Toshiba	TA7616	3167-129
76161	Harris	HM76161-2	★3951
			3765-36
		HM76161-5	★3951
			3765-14
		HM76161A-5	★3951
			3764-120
	Motorola	MCM76161	★4047
			3765-28
		MCM76161A	★4047
			3764-126
76165	Harris	HM76165-2	★3952
			3765-117
		HM76165-5	★3952
			3765-112
	Motorola	MCM76165	★4047
			3765-93
7617	Toshiba	TA7617	3169-134
7619	Toshiba	TA7619A	3171-55
762	Siemens	TAA762	3176-30
7620	Harris	HM7620-2	★3945
			3761-78
		HM7620-5	★3945
			3761-62
		HM7620A-2	★3945
			3761-63
		HM7620A-5	★3945
			3761-34
		HM76208-1	★3945
			3760-91
		HM76208-5	★3945
			3760-74

Arranged alphanumerically from left to right.

© IC MASTER 1984

Base Number	Source	Device	Page-Line
7621	Harris	HM7621-2	★3945
			3761-79
		HM7621-5	★3945
			3761-65
		HM7621A-2	★3945
			3761-66
		HM7621A-5	★3945
			3761-37
		HM7621B-2	★3945
			3760-95
		HM7621B-5	★3945
			3760-76
	Intersil	ICL7621AC	★3481
			3205-4
		ICL7621AM	★3481
			3205-5
		ICL7621BC	★3481
			3206-40
		ICL7621BM	★3481
			3206-41
		ICL7621C	★3481
			3195-47
		ICL7621DC	★3481
			3209-39
	MicroPwr	MP7621A	★3046
			2653-40
		MP7621B	★3046
			2650-51
		MP7621J	★3046
			2653-41
		MP7621K	★3046
			2650-52
		MP7621S	★3046
			2653-42
		MP7621T	★3046
			2650-53
		MP7621Z	★3046
			2655-27
	Motorola	MCM7621	★4047
			3761-67
		MCM7621A	★4047
			3761-38
	Toshiba	TA7621	3171-34
7622	Intersil	ICL7622AC	★3481
			3205-2
		ICL7622AM	★3481
			3205-3
		ICL7622BC	★3481
			3206-42
		ICL7622BM	★3481
			3206-43
		ICL7622C	★3481
			3195-48
		ICL7622DC	★3481
			3209-40
	MicroPwr	MP7622A	★3046
			2654-3
		MP7622B	★3046
			2648-43
		MP7622H	★3046
			2655-39
		MP7622J	★3046
			2654-4
		MP7622K	★3046
			2648-45
		MP7622R	★3046
			2655-40
		MP7622S	★3046
			2654-5
		MP7622T	★3046
			2648-44
		MP7622Z	★3046
			2655-41
	Siliconix	SI7622A	★3083
			2654-6
		SI7622H	★3083
			2655-42
		SI7622R	★3083
			2655-43
		SI7622S	★3083
			2654-7
		SI7622Z	★3083
			2655-44
	Toshiba	TA7622A	3171-35
7623	MicroPwr	MP7623A	★3046
			2654-12
			(Continued)

Base Number	Source	Device	Page-Line
7623	MicroPwr	MP7623B	★3046
			2651-15
		MP7623J	★3046
			2654-13
		MP7623K	★3046
			2651-16
		MP7623S	★3046
			2654-14
		MP7623T	★3046
			2651-17
7624	Toshiba	TA7624	3168-171
76242	TI	SN76242	3171-13
76243	TI	SN76243	3171-14
76246	TI	SN76246	3171-15
7625	Toshiba	TA7625	3169-148
76267	TI	SN76267	3171-16
7628	Toshiba	TA7628	3169-114
		TA7628H	3169-115
76298	TI	SN76298	3171-17
7631	Intersil	ICL7631BC	★3481
			3209-55
		ICL7631BM	★3481
			3209-56
		ICL7631C	★3481
			3195-49
		ICL7631CC	★3481
			3210-4
		ICL7631CM	★3481
			3210-5
		ICL7631EC	★3481
			3210-9
		ICL7631M	★3481
			3195-39
7632	Intersil	ICL7632BC	★3481
			3210-1
		ICL7632BM	★3481
			3210-2
		ICL7632C	★3481
			3208-19
		ICL7632CC	★3481
			3210-6
		ICL7632CM	★3481
			3210-7
		ICL7632EC	★3481
			3210-10
		ICL7632M	★3481
			3195-40
	Toshiba	TA7632	3172-33
76321	Harris	HM76321-2	★3953
			3766-20
		HM76321-5	★3953
			3766-9
7633	Toshiba	TA7633	3172-34
76333	TI	SN76333	3233-76
76334	TI	SN76334	3233-77
7637	Toshiba	TA7637	3172-184
7639	Toshiba	TA7639	3169-151
764	SGS	M764	3219-30
		M764A	3219-31
7640	Harris	HM7640-2	★3946
			3762-46
		HM7640-5	★3946
			3762-27
		HM7640A-2	★3946
			3762-1
		HM7640A-5	★3946
			3761-107
	LSILogic	LL7640	★4762
			4460-52
	National	DS7640	2672-44
7641	Harris	HM7641-2	★3946
			3762-50
		HM7641-5	★3946
			3762-34
		HM7641A-2	★3946
			3762-12
		HM7641A-5	★3946
			3761-116
	Intersil	ICL7641BC	★3481
			3211-12
		ICL7641BM	★3481
			3211-13
		ICL7641CC	★3481
			3213-8
		ICL7641CM	★3481
			3213-9
			(Continued)

Base Number	Source	Device	Page-Line
7641	Intersil	ICL7641EC	★3481
			3213-45
	Motorola	MCM7641	★4047
			3762-37
		MCM7641A	★4047
			3761-40
	National	DS7641	2675-44
7642	Harris	HM7642-2	★3948
			3762-109
		HM7642-5	★3948
			3762-110
		HM7642A-2	★3948
			3763-1
		HM7642A-5	★3948
			3762-93
		HM7642B-2	★3948
			3762-100
		HM7642B-5	★3948
			3762-84
	Intersil	ICL7642BC	★3481
			3211-14
		ICL7642BM	★3481
			3211-15
		ICL7642C	★3481
			3195-50
		ICL7642CC	★3481
			3213-10
		ICL7642CM	★3481
			3213-11
		ICL7642EC	★3481
			3213-46
		ICL7642M	★3481
			3195-41
7643	Harris	HM7643-2	★3948
			3762-114
			3763-12
		HM7643-5	★3948
			3762-115
		HM7643A-2	★3948
			3763-2
		HM7643A-5	★3948
			3762-94
		HM7643B-2	★3948
			3762-104
		HM7643B-5	★3948
			3762-88
	Motorola	MCM7643	★4047
			3763-3
		MCM7643A	★4047
			3762-96
7645	MicroPwr	MP7645	★3046
76477	TI	SN76477	3173-18
			1354-49
76487	TI	SN76487	3165-192
76488	TI	SN76488	3165-193
			1354-50
76489	TI	SN76489	3165-187
		SN76489A	3165-188
7649	Harris	HM7649-2	★3947
			3762-42
		HM7649-5	★3947
			3762-3
		HM7649A-2	★3947
			3761-124
		HM7649A-5	★3947
			3761-111
	Motorola	MCM7649	★4047
			3762-30
		MCM7649A	★4047
			3761-118
76493	TI	SN76493	3165-189
76494	TI	SN76494	3165-190
76495	TI	SN76495	3165-191
765	NEC	μPD765	★1549
			1344-96
			1345-124
			1346-126
			1353-100
			1353-102
			1353-115
			¶ 273-3
7650	Datel	AM-7650	★2865
			3181-5
	Intersil	ICL7650C	★3488
			3181-6
	TeledyneS	TSC7650	★3096
			(Continued)

Base Number	Source	Device	Page-Line
7650	TeledyneS	TSC7650	3181-4
	Telmos	TML7650	3181-3
			3194-28
		TML7650-1	3181-2
			3194-27
	Toshiba	TA7650	3171-36
7652	Intersil	ICL7652	★3496
	Toshiba	TA7652	3171-124
76524	TI	SN76524	3171-146
76525	TI	SN76525	3171-104
7654	Toshiba	TA7654	2661-59
76544	TI	SN76544	3171-147
76545	TI	SN76545	3171-148
7655	Toshiba	TA7655	2661-60
76565	TI	SN76565	3170-42
76566	TI	SN76566	3232-115
7659	Toshiba	TA7659	3171-37
7660	Datel	VI-7660C	★2865
			3239-6
		VI-7660M	★2865
			3239-7
	Intersil	ICL7660	★3498
			3239-8
			3239-15
			¶ 283-13
	Siliconix	SI7660	★3081
			3239-16
	TeledyneS	TSC7660	★3097
			3239-9
	Toshiba	TA7660	3171-38
76600	TI	SN76600	3172-170
76605	TI	SN76605	3169-63
76606	TI	SN76606	3169-64
7661	Siliconix	SI7661	3239-14
	Toshiba	TA7661	3171-39
7663	Intersil	ICL7663	★3505
			3228-25
	Toshiba	TA7663	3169-150
76635	TI	SN76635	3167-120
7664	Intersil	ICL7664	★3505
			3229-69
	National	DS7664	2664-3
76641	Harris	HM76641-2	★3954
			3766-72
		HM76641-5	★3954
			3766-71
76642	TI	SN76642	3168-98
76643	TI	SN76643	3168-99
			3172-19
76644	TI	SN76644	3172-171
76645	TI	SN76645	3171-18
7665	Intersil	ICL7665	★3513
			3239-111
76650	TI	SN76650	3172-172
76651	TI	SN76651	3172-20
7666	Toshiba	TA7666	2663-33
76660	TI	SN76660	3172-21
76665	TI	SN76665	3172-22
76666	TI	SN76666	3172-23
76669	TI	SN76669	3168-100
7667	Intersil	ICL7667	★3013
			2682-59
	Toshiba	TA7667	2663-34
76675	TI	SN76675	3168-101
76676	TI	SN76676	3168-53
76678	TI	SN76678	3168-54
76688	TI	SN76688	3172-24
76689	TI	SN76689	3168-102
767	NEC	uPC767	3219-84
76701	TI	SN76701	3170-102
76702	TI	SN76702	3170-103
76710	TI	SN76710	3170-104
76711	TI	SN76711	3170-105
76720	TI	SN76720	3171-137
76721	TI	SN76721	3170-106
76727	TI	SN76727	3170-107
76730	TI	SN76730	3169-65
7675	Toshiba	TA7675	3171-40
7676	Toshiba	TA7676	3171-41
7678	Toshiba	TA7678	3171-42
7681	Harris	HM7681-2	★3949
			3763-100
		HM7681-5	★3949
			3763-76
		HM7681A-2	★3949
			3763-67
			(Continued)

¶ Indicates page number in Application Note Directory.
★ Indicates addition data is provided on the page noted.

Base Number	Source	Device	Page-Line
7681	**Harris**	**HM7681A-5**	★3949
			3763-46
	Motorola	**MCM7681**	★4047
			3763-78
		MCM7681A	★4047
			3763-49
76810	TI	SN76810	3173-137
76811	TI	SN76811	641-119
76812	TI	SN76812	3220-7
76831	TI	SN76831	3169-66
76832	**TI**	**SN76832A**	★ 387
			3169-67
			¶ 307-6
7685	**Harris**	**HM7685-2**	★3950
			3764-61
		HM7685-5	★3950
			3764-52
		HM7685A-2	★3950
			3764-42
		HM7685A-5	★3950
			3764-27
	Motorola	**MCM7685**	★4047
			3764-55
		MCM7685A	★4047
			3765-7
	Toshiba	TA7685	3165-179
76881	**TI**	**SN76881**	★ 387
			3169-7
			¶ 307-6
76882	**TI**	**SN76882**	★ 387
			3169-8
			¶ 307-6
76889	TI	SN76889	3171-19
76891	**TI**	**SN76891**	★ 387
			3169-9
			¶ 307-6
76940	TI	SN76940	3218-101
7699	Rockwell	A7699	1339-81
76LS52	National	DM76LS52	626-158
76LS682			
	TI	**SN76LS682**	★1086
76S128	National	DM76S128	3755-1
76S64	National	DM76S64	3755-2
770	Fujitsu	C770	4467-41
	Fujitsu	**C770H**	★4639
			4464-14
	Signetics	TCA770	3168-92
			3168-124
7700	CalDevices	HCS7700	4463-18
	LSILogic	**LC7700**	★4762
			4468-21
7705	Motorola	MC7705C	3221-40
771	Fairchild	u	3195-13
		uA771A	3190-14
		uA771AM	3190-15
		uA771B	3195-14
		uA771BM	3195-15
		uA771L	3202-23
		uAF771	3175-40
77153	**Harris**	**HPL77153-2**	★3957
			4482-79
		HPL77153-5	★3957
			4482-74
772	Fairchild	uA772	3209-27
		uA772A	3205-11
		uA772AM	3205-12
		uA772B	3206-45
		uA772BM	3206-46
		uA772L	3209-41
77209	**Harris**	**HPL77209-2**	★3958
			4481-72
		HPL77209-5	★3958
			4480-107
		HPL77209/16L8-2	
			★3958
			4481-73
		HPL77209/16L8-5	
			★3958
			4480-108
77215	**Harris**	**HPL77215/16H8-2**	
			★3958
			4481-74
		HPL77215/16H8-5	
			★3958
			4480-109
77216	**Harris**	**HPL77216/16P8-2**	
			★3958
			4481-75
		HPL77216/16P8-5	
			★3958
			4480-110
7722	Siliconix	SI7722J	2654-8
77317	**Harris**	**HPL77317-2**	★3959
			4481-76
		HPL77317/16L08-5	
			★3959
			4480-111
77318	**Harris**	**HPL77318-2**	★3959
			4481-77
		HPL77318/16H08-5	
			★3959
			4480-112
77319	**Harris**	**HPL77319-2**	★3960
			4481-78
		HPL77319-5	★3960
			4480-113
77320	**Harris**	**HPL77320-5**	★3960
			4481-1
774	Fairchild	uA774	3213-23
		uA774B	3211-18
		uA774BM	3211-19
		uA774L	3213-30
7751	Sanyo	LA7751	3171-143
7755	Sanyo	LA7755	3171-144
776	Fairchild	uA776	3190-49
		uA776C	3208-17
		uA776M	3206-52
777	Intersil	uA777C	3196-17
	TI	uA777M	3190-60
7770	SGS	TDA7770	3169-137
7791	AMD	AM7791	1353-65
77LS181			
	National	**DM77LS181**	★4057
			3763-109
77S180	**National**	**DM77S180**	★4057
			3763-83
77S181	**National**	**DM77S181**	★4057
			3763-86
		DM77S181A	★4057
			3762-122
77S184	**National**	**DM77S184**	★4057
			3764-51
77S185	**National**	**DM77S185**	★4057
			3764-56
		DM77S185A	★4057
			3764-43
		DM77S185B	★4057
			3764-30
77S188	National	DM77S188	3760-16
77S190	**National**	**DM77S190**	★4057
			3765-34
77S191	**National**	**DM77S191**	★4057
			3765-37
		DM77S191A	★4057
			3765-16
		DM77S191B	★4057
			3764-127
77S195	**National**	**DM77S195A**	★4057
			★4057
			3765-113
		DM77S195B	★4057
			3765-108
77S280	**National**	**DM77S280**	★4057
			3763-84
77S281	**National**	**DM77S281**	★4057
			3763-87
77S288	National	DM77S288	3760-17
77S290	**National**	**DM77S290**	★4057
			3765-35
77S291	**National**	**DM77S291**	★4057
			3765-38
		DM77S291A	★4057
			3765-17
		DM77S291B	★4057
			3764-128
77S321	**National**	**DM77S321**	★4057
			3766-10
77S401	National	DM77S401	3757-44
		DM77S401A	3757-52
77S402	National	DM77S402	3757-57
		DM77S402A	3757-61
77S421	**National**	**DM77S421**	★4057
			3766-11
77SR181			
	National	**DM77SR181**	★4057
			3763-35
77SR25	**National**	**DM77SR25**	★4057
			3761-101
77SR474			
	National	**DM77SR474**	★4057
			3762-64
77SR476			
	National	**DM77SR476**	★4057
			3761-102
78	Amperex	BGY78	3170-64
	Fairchild	u78HG	3228-56
		uA78G	3228-55
		uA78MG	3228-54
	PMI	DAC-78F	2647-20
	Rockwell	MM78	1339-74
			1263-8
		MM78L	1339-76
			1263-9
		MM78LA	1339-77
		MM78LS	1339-78
780	NEC	uPD780	1348-49
			1277-22
		uPD780-1	1348-50
	Siemens	TCA780	3239-102
	TI	TL780-05C	3221-109
		TL780-12C	3223-116
		TL780-15C	3224-84
7800	National	DS7800	636-125
	NEC	uPD7800	1277-23
	Panasonic	**AN7800**	★3557
	Sanyo	LA7800	3172-81
78005	Toshiba	TA78005	3221-78
7801	Pro-Log	7801	1963-21
	Sanyo	LA7801	3172-38
78012	Toshiba	TA78012	3223-83
78015	Toshiba	TA78015	3224-54
7802	NEC	uPD7802	1277-24
	Pro-Log	7802	1959-25
	Sanyo	LA7802	3172-39
7803	National	DS7803	2683-119
	Pro-Log	7803A	1957-3
7804	Pro-Log	7804	1957-4
7805	Fairchild	uA7805C	3221-81
		uA7805M	3221-82
	Motorola	**MC7805**	★3531
			3221-87
		MC7805A	★3531
			3221-88
		MC7805AC	★3531
			3221-89
		MC7805C	★3531
			3221-90
	National	LM7805	3221-96
	NEC	uPC7805	3221-66
	SGS	L7805	3221-67
		L7805C	3221-68
	SiliconG	SG7805ACK	3221-101
		SG7805ACP	3221-72
		SG7805ACR	3221-102
		SG7805ACT	3221-51
		SG7805AK	3221-103
		SG7805AP	3221-73
		SG7805AT	3221-52
		SG7805CK	3221-104
		SG7805CP	3221-74
		SG7805CR	3221-105
		SG7805K	3221-106
		SG7805P	3221-75
	Unitrode	**UC7805**	★3711
			3221-110
		UC7805A	★3711
			3221-79
		UC7805AC	★3711
			3221-80
		UC7805C	★3711
			3221-111
7806	Fairchild	uA7806C	3222-48
	Motorola	**MC7806**	★3531
			3222-52
		MC7806A	★3531
			3222-53
		MC7806AC	★3531
			(Continued)
7806	**Motorola**	**MC7806AC**	3222-54
		MC7806C	★3531
			3222-55
	Pro-Log	7806	1957-19
	Sanyo	LA7806	3172-40
	SiliconG	SG7806ACK	3222-60
		SG7806ACP	3222-43
		SG7806ACR	3222-61
		SG7806ACT	3222-37
		SG7806AK	3222-62
		SG7806AP	3222-44
		SG7806AT	3222-38
		SG7806CK	3222-63
		SG7806CP	3222-45
		SG7806CR	3222-64
		SG7806CT	3222-39
		SG7806K	3222-65
		SG7806P	3222-46
		SG7806T	3222-40
	TI	uA7806C	3222-67
7807	National	DS7807	2683-120
	NEC	**μPD7807**	★1566
			1348-121
	NEC	uPD7807	1277-25
7808	Fairchild	uA7808C	3222-113
		uA7808M	3222-114
	Motorola	**MC7808**	★3531
			3222-119
		MC7808A	★3531
			3222-120
		MC7808AC	★3531
			3222-121
		MC7808C	★3531
			3222-122
	NEC	uPC7808	3223-8
	SiliconG	SG7808ACK	3222-127
		SG7808ACP	3223-9
		SG7808ACR	3222-128
		SG7808ACT	3222-106
		SG7808AK	3222-129
		SG7808AP	3223-10
		SG7808AT	3222-107
		SG7808CK	3222-130
		SG7808CP	3223-11
		SG7808CR	3222-131
		SG7808CT	3222-108
		SG7808K	3222-132
		SG7808P	3223-12
		SG7808T	3222-109
	TI	uA7808C	3222-134
7809	**NEC**	**μPD7809**	★1566
			1348-122
	NEC	uPD7809	1277-26
	SGS	L7809	3223-25
781	NEC	uPD781	1353-48
7810	National	DS7810	613-169
	NEC	**μPD7810**	★1562
			1348-119
	NEC	uPD7810	1277-27
	SMOS	SVM7810	3167-2
	Sanyo	LA7810	3172-41
	TI	uA7810C	3223-40
7811	National	DS7811	613-170
	NEC	**μPD7811**	★1562
			1348-120
	NEC	uPD7811	1277-28
7812	Fairchild	uA7812C	3223-86
		uA7812M	3223-87
	Motorola	**MC7812**	★3531
			3223-92
		MC7812A	★3531
			3223-93
		MC7812AC	★3531
			3223-94
		MC7812C	★3531
			3223-95
	National	DS7812	614-64
		LM7812	3223-100
	NEC	uPC7812	3223-75
	SGS	L7812	3223-101
			3223-124
		L7812C	3223-102
			3223-125
	SiliconG	SG7812ACK	3223-108
		SG7812ACP	3223-109
		SG7812ACR	3223-78
			(Continued)

Arranged alphanumerically from left to right.

© IC MASTER 1984

Base Number	Source	Device	Page-Line
7812	SiliconG	SG7812ACT	3223-68
		SG7812AK	3223-110
		SG7812AR	3223-79
		SG7812AT	3223-69
		SG7812CK	3223-111
		SG7812CP	3223-112
		SG7812CR	3223-80
		SG7812CT	3223-70
		SG7812K	3223-113
		SG7812R	3223-81
		SG7812T	3223-71
	TI	uA7812C	3223-117
	Unitrode	**UC7812**	★3711
			3223-84
		UC7812A	★3711
			3223-118
		UC7812AC	★3711
			3223-119
		UC7812C	★3711
			3223-85
7815	Fairchild	uA7815C	3224-59
		uA7815M	3224-60
	Motorola	**MC7815**	★3531
			3224-65
		MC7815A	★3531
			3224-66
		MC7815AC	★3531
			3224-67
		MC7815C	★3531
			3224-68
	National	LM7815	3224-73
	SGS	L7815	3224-48
		L7815C	3224-49
	SiliconG	SG7815ACK	3224-76
		SG7815ACP	3224-77
		SG7815ACR	3224-50
		SG7815ACT	3224-41
		SG7815AK	3224-78
		SG7815AR	3224-51
		SG7815AT	3224-42
		SG7815CK	3224-79
		SG7815CP	3224-80
		SG7815CR	3224-52
		SG7815CT	3224-43
		SG7815K	3224-81
		SG7815R	3224-53
		SG7815T	3224-44
	TI	uA7815C	3224-85
	Unitrode	**UC7815**	★3711
			3224-55
		UC7815A	★3711
			3224-56
		UC7815AC	★3711
			3224-57
		UC7815C	★3711
			3224-58
7817	SiliconG	SG7817AP	3224-131
7818	Fairchild	uA7818C	3225-3
		uA7818M	3225-4
	Motorola	**MC7818**	★3532
			3225-9
		MC7818A	★3532
			3225-10
		MC7818AC	★3532
			3225-11
		MC7818C	★3532
			3225-12
	NEC	uPC7818	3224-126
	SGS	L7818	3224-129
		L7818C	3224-130
	SiliconG	SG7818ACK	3225-17
		SG7818ACP	3224-132
			3225-18
		SG7818ACT	3224-122
		SG7818AK	3225-19
		SG7818AP	3224-133
		SG7818AT	3224-123
		SG7818CK	3225-20
		SG7818CP	3225-21
		SG7818CT	3224-124
		SG7818K	3225-22
		SG7818P	3225-1
		SG7818T	3224-125
	TI	uA7818C	3225-24
7819	National	DS7819	613-151
782	NEC	uPD782	1353-49
7820	**Motorola**	**MC7820**	★3532
	National	DS7820	2674-9
			¶ 285-14
			¶ 286-9
			¶ 287-6
		DS7620A	2674-3
			¶ 285-14
			¶ 286-9
			¶ 287-6
	SiliconG	SG7820ACT	3225-41
		SG7820AT	3225-42
		SG7820CT	3225-43
		SG7820K	3225-53
		SG7820R	3225-54
		SG7820T	3225-44
7822	National	DS7822	2672-11
7824	Fairchild	uA7824C	3225-90
		uA7824M	3225-91
	Motorola	**MC7824**	★3532
			3225-95
		MC7824A	★3532
			3225-96
		MC7824AC	★3532
			3225-97
		MC7824C	★3532
			3225-98
	NEC	uPC7824	3225-81
	SGS	L7824	3225-83
		L7824C	3225-84
	SiliconG	SG7824ACK	3225-104
		SG7824ACP	3225-85
		SG7824ACR	3225-105
		SG7824ACT	3225-75
		SG7824AK	3225-106
		SG7824AP	3225-86
		SG7824AT	3225-76
		SG7824CK	3225-107
		SG7824CP	3225-87
		SG7824CR	3225-108
		SG7824CT	3225-77
		SG7824K	3225-109
		SG7824P	3225-88
		SG7824T	3225-78
	TI	uA7824C	3225-111
783	TI	TL783C	3229-66
7830	National	DS7830	2670-43
			¶ 285-14
			¶ 286-9
			¶ 287-6
7831	National	DS7831	2668-34
			2670-52
			¶ 258-15
			¶ 259-6
			¶ 285-14
7832	National	DS7832	2668-27
			2670-55
			¶ 285-14
7833	National	DS7833	2676-33
			¶ 285-14
7834	National	DS7834	2676-28
			¶ 285-14
7835	National	DS7835	2676-26
			¶ 285-14
7836	National	DS7836	2672-42
			¶ 285-14
7837	National	DS7837	2672-60
			¶ 285-14
7838	AMD	AM7838	2676-24
	National	DS7838	2676-25
			¶ 285-14
7839	National	DS7839	2676-31
			¶ 285-14
7840	**LSILogic**	**LL7840**	★4762
			4461-1
7853	National	DM7853	630-138
78540	Motorola	uA78540	3230-78
7875	National	DM7875	605-5
	SGS	L7875	3222-86
		L7875C	3222-87
7880	National	DS7880	2663-76
	Pro-Log	7880	1957-20
7885	Fairchild	uA7885	3223-18
	Pro-Log	7885	1963-27
	TI	uA7885C	3223-19
7889	National	DS7889	2663-126
	Pro-Log	7889	1961-22
7899	Rockwell	MM7899	1339-75
78C120	National	DS78C120	2673-51
78C20	National	DS78C20	2674-10
78C29	National	MM78C29	593-82
			2671-21
78C30	National	MM78C30	593-28
			2670-27
78C75	SGS	L78C75C	3222-88
78H05	Fairchild	uA78H05	3222-12
		uA78H05A	3222-13
78H08	Fairchild	uA78H08C	3223-7
78H12	Fairchild	uA78H12A	3224-3
78L00	**Motorola**	**MC78L00**	★3531
	Panasonic	**AN78L00**	★3557
78L005	Toshiba	TA78L005	3221-16
		TA78L005A	3221-17
78L006	Toshiba	TA78L006	3222-29
		TA78L006A	3222-30
78L007	Toshiba	TA78L007	3222-80
		TA78L007A	3222-81
78L008	Toshiba	TA78L008	3222-95
		TA78L008A	3222-96
78L009	Toshiba	TA78L009	3223-23
		TA78L009A	3223-24
78L010	Toshiba	TA78L010	3223-31
		TA78L010A	3223-32
78L012	Toshiba	TA78L012	3223-55
		TA78L012A	3223-56
78L015	Toshiba	TA78L015	3224-29
		TA78L015A	3224-30
78L018	Toshiba	TA78L018	3224-115
		TA78L018A	3224-116
78L02	Motorola	MC78L02C	3221-2
	TI	uA78L02AC	3221-3
		uA78L02C	3221-4
78L020	Toshiba	TA78L020	3225-36
		TA78L020A	3225-37
78L024	Toshiba	TA78L024	3225-65
		TA78L024A	3225-66
78L05	Fairchild	uA78L05C	3221-6
	Motorola	**MC78L05AC**	3221-8
		MC78L05C	3221-9
	National	LM78L05A	3221-11
		LM78L05C	3221-12
	NEC	uPC78L05	3221-13
	TI	uA78L05AC	3221-14
		uA78L05C	3221-15
78L06	TI	uA78L06AC	3222-78
		uA78L06C	3222-79
78L075	Toshiba	TA78L075	3222-84
		TA78L075A	3222-85
78L08	Motorola	MC78L08AC	3222-90
		MC78L08C	3222-91
	NEC	uPC78L08	3222-92
	TI	uA78L08AC	3222-93
		uA78L08C	3222-94
78L09	Fairchild	uA78L09C	3223-20
	TI	uA78L09AC	3223-21
		uA78L09C	3223-22
78L10	TI	uA78L10AC	3223-29
		uA78L10C	3223-30
78L12	Fairchild	uA78L12C	3223-45
	Motorola	MC78L12AC	3223-46
		MC78L12C	3223-47
	National	DS78L12	636-130
		LM78L12A	3223-50
		LM78L12C	3223-51
	NEC	uPC78L12	3223-52
	TI	uA78L12AC	3223-53
		uA78L12C	3223-54
78L132	Toshiba	TA78L132	3224-12
		TA78L132A	3224-13
78L15	Fairchild	uA78L15C	3224-19
	Motorola	MC78L15AC	3224-20
		MC78L15C	3224-21
	National	LM78L15A	3224-24
		LM78L15C	3224-25
	NEC	uPC78L15	3224-26
	TI	uA78L15AC	3224-27
		uA78L15C	3224-28
78L18	Motorola	MC78L18AC	3224-113
		MC78L18C	3224-114
78L20	National	DS78L20	2673-58
78L24	Motorola	MC78L24AC	3225-63
		MC78L24C	3225-64
78L62	Fairchild	uA78L62C	3222-77
78L82	Fairchild	uA78L82C	3223-14
78LS120			
	National	DS78LS120	2673-49
78M00	**Motorola**	**MC78M00**	★3531
	Panasonic	**AN78M00**	★3557
78M05	Fairchild	uA78M05C	3221-37
		uA78M05M	3221-38
	Motorola	MC78M05C	3221-41
	National	LM78M05	3221-43
	NEC	uPC78M05	3221-44
	TI	uA78M05C	3221-53
		uA78M05M	3221-54
78M06	Fairchild	uA78M06C	3222-31
		uA78M06M	3222-32
	Motorola	MC78M06C	3222-34
	TI	uA78M06C	3222-41
		uA78M06M	3222-42
78M08	Fairchild	uA78M08C	3222-99
		uA78M08M	3222-100
	Motorola	MC78M08C	3222-102
	NEC	uPC78M08	3222-103
	TI	uA78M08C	3222-110
		uA78M08M	3222-111
78M10	TI	uA78M10C	3223-38
78M12	Fairchild	uA78M12C	3223-58
		uA78M12M	3223-59
	Motorola	MC78M12C	3223-61
	National	LM78M12	3223-63
	NEC	uPC78M12	3223-64
	TI	uA78M12C	3223-72
		uA78M12M	3223-73
78M15	Fairchild	uA78M15C	3224-32
		uA78M15M	3224-33
	Motorola	MC78M15C	3224-35
	National	LM78M15	3224-37
	NEC	uPC78M15	3224-38
	TI	uA78M15C	3224-45
		uA78M15M	3224-46
78M18	Motorola	MC78M18C	3224-118
	NEC	uPC78M18	3224-119
78M20	Motorola	MC78M20C	3225-38
	TI	uA78M20C	3225-45
		uA78M20M	3225-46
78M24	Fairchild	uA78M24C	3225-68
		uA78M24M	3225-69
	Motorola	MC78M24C	3225-71
	NEC	uPC78M24	3225-72
	TI	uA78M24C	3225-79
		uA78M24M	3225-80
78P05	Fairchild	uA78P05	3222-23
78P09	**NEC**	**μPD78P09**	★1566
			1348-123
	NEC	uPD78P09	1277-29
78R05	SiliconG	SG78R05	3221-107
78R06	SiliconG	SG78R06	3222-66
78R08	SiliconG	SG78R08	3222-133
78R12	SiliconG	SG78R12	3223-114
78R15	SiliconG	SG78R15	3224-82
78R18	SiliconG	SG78R18	3225-23
78R20	SiliconG	SG78R20	3225-55
78R24	SiliconG	SG78R24	3225-110
78S05	SGS	L78S05	3221-115
		L78S05C	3221-116
78S09	SGS	L78S09	3223-26
		SL78S09C	3223-27
78S10	SGS	L78S10	3223-41
		L78S10C	3223-42
78S12	SGS	L78S12C	3223-126
78S15	SGS	L78S15	3224-89
		L78S15C	3224-90
78S18	SGS	L78S18	3225-28
		L78S18C	3225-29
78S24	SGS	L78S24	3225-116
		L78S24C	3225-117
78S40	Fairchild	uA78S40	3230-41
		uA78S40M	3230-42
	Motorola	**μ78S40**	★3533
78S75	SGS	L78S75	3222-89
78T00	**Motorola**	**MC78T00**	★3531
78T05	Motorola	MC78T05	3221-135
		MC78T05A	3221-136
		MC78T05AC	3222-1
		MC78T05C	3222-2
78T06	Motorola	MC78T06	3222-73
		MC78T06C	3222-74

¶ Indicates page number in Application Note Directory.
★ Indicates addition data is provided on the page noted.

Base Number	Source	Device	Page-Line
78T08	Motorola	MC78T08	3223-2
		MC78T08C	3223-3
78T12	Motorola	MC78T12	3223-129
		MC78T12A	3223-130
		MC78T12AC	3223-131
		MC78T12C	3223-132
78T15	Motorola	MC78T15	3224-96
		MC78T15A	3224-97
		MC78T15AC	3224-98
		MC78T15C	3224-99
78T18	Motorola	MC78T18	3225-25
		MC78T18C	3225-26
78T24	Motorola	MC78T24	3225-113
		MC78T24C	3225-114
79	Fairchild	uA79G	3229-78
		uA79HG	3229-70
		uA79MG	3229-77
	Rockwell	MM79LS	1339-79
7900	**Panasonic**	**AN7900**	★3557
	Sanyo	LA7900	3172-54
7901	Polycore	PE7901	2663-20
7902	Motorola	MC7902C	3226-1
	Polycore	PE7902	2663-21
7905	Fairchild	uA7905C	3226-30
		uA7905M	3226-31
	Motorola	**MC7905**	★3531
			3226-64
		MC7905C	★3531
			3226-34
	National	LM7905	3226-38
	NEC	uPC7905	3226-26
	SiliconG	SG7905	3226-44
			3226-70
			3226-71
			3226-72
			3226-73
			3226-70
			3226-71
			3226-72
			3226-73
		SG7905A	3226-45
		SG7905C	3226-46
	TI	uA7905C	3226-47
	Unitrode	**UC7905**	★3711
			3226-49
		UC7905A	★3711
			3226-50
		UC7905AC	★3711
			3226-51
		UC7905C	★3711
			3226-52
79052	Motorola	MC79052C	3226-53
7906	**Motorola**	**MC7906C**	★3531
			3226-80
	TI	uA7906C	3226-81
7908	Fairchild	uA7908C	3226-92
		uA7908M	3226-86
	Motorola	**MC7908C**	★3531
			3226-94
	NEC	uPC7908	3226-95
	SiliconG	SG7908	3226-101
		SG7908A	3226-102
		SG7908AC	3226-103
		SG7908C	3226-104
	TI	uA7908C	3226-105
791	Fairchild	uA791C	3199-9
7910	**AMD**	**AM7910**	★1433
			★3321
			3217-128
	SMOS	7910	3166-166
	Thomson-CSF		
		EFB7910	3217-129
7911	Matrix	7911-SP9	1961-16
7911CP3			
	Matrix	7911CP3	1961-1
7912	Fairchild	uA7912C	3227-1
		uA7912M	3227-2
	Motorola	**MC7912AC**	★3531
			3227-5
		MC7912C	★3531
			3227-6
	National	LM7912	3227-7
	NEC	uPC7912	3226-131
	SiliconG	SG7912	3227-13
		SG7912A	3227-14
		SG7912AC	3227-15
			(Continued)

Base Number	Source	Device	Page-Line
7912	SiliconG	SG7912C	3227-16
	TI	uA7912C	3227-17
	Thomson-CSF		
		EFB7912	3217-103
	Unitrode	**UC7912**	★3711
			3227-19
		UC7912A	★3711
			3227-20
		UC7912AC	★3711
			3227-21
		UC7912C	★3711
			3227-22
7915	Fairchild	uA7915C	3227-52
		uA7915M	3227-53
	Motorola	**MC7915AC**	★3531
			3227-56
		MC7915C	★3531
			3227-57
	National	LM7915	3227-58
	NEC	uPC7915	3227-48
	SiliconG	SG7915	3227-64
		SG7915A	3227-65
		SG7915AC	3227-66
		SG7915C	3227-67
	TI	uA7915C	3227-68
	Unitrode	**UC7915**	★3711
			3227-70
		UC7915A	★3711
			3227-71
		UC7915AC	★3711
			3227-72
		UC7915C	★3711
			3227-73
7918	**Motorola**	**MC7918C**	★3532
			3227-84
	NEC	uPC7918	3227-82
	SiliconG	SG7918	3227-91
		SG7918A	3227-92
		SG7918AC	3227-93
		SG7918C	3227-94
	TI	uA7918C	3227-95
792	NEC	uPD792	3234-103
	Plessey	SL792	3216-1
7920	SMOS	7920	3166-167
	SiliconG	SG7920	3227-103
		SG7920A	3227-104
		SG7920AC	3227-105
		SG7920C	3227-106
7924	**Motorola**	**MC7924C**	★3532
			3227-118
	NEC	uPC7924	3227-116
	TI	uA7924C	3227-119
793	Plessey	SL793	3216-2
7930	SMOS	7930	3166-168
794	NEC	uPD794	3234-104
7940	SMOS	SVM7940	3166-169
7950	SMOS	SVM7950	3166-170
7952	TI	uA7952C	3226-74
7960	SMOS	SVM7960	3166-171
	Sanyo	LC7960	577-64
7961	Sanyo	LC7961	577-90
7970	SMOS	SVM7970	3166-172
798	Fairchild	uA798	3180-37
		uA798C	3208-25
7990	**AMD**	**AM7990**	★1433
			★3327
			1353-58
			1353-61
			1353-62
	SMOS	SVM7990	3166-173
7991	**AMD**	**AM7991**	★1433
			★3327
			2685-91
			★1433
			★3327
			1353-66
7995	AMD	AM7995	1353-67
79E02	Fairchild	uA79E02	3226-3
		uA79E02C	3226-4
79L00	**Motorola**	**MC79L00**	★3531
79L03	Motorola	MC79L03AC	3226-5
		MC79L03C	3226-6
79L05	Motorola	MC79L05AC	3226-7
		MC79L05C	3226-8
	National	LM79L05	3226-10
		LM79L05A	3226-11
			(Continued)

Base Number	Source	Device	Page-Line
79L05	TI	MC79L05AC	3226-12
		MC79L05C	3226-13
79L12	Motorola	MC79L12AC	3226-110
		MC79L12C	3226-111
	National	LM79L12	3226-113
		LM79L12A	3226-114
	TI	MC79L12AC	3226-115
		MC79L12C	3226-116
79L15	Motorola	MC79L15A	3227-44
		MC79L15AC	3227-25
		MC79L15C	3227-26
	National	LM79L15	3227-28
		LM79L15A	3227-29
	TI	MC79L15AC	3227-30
		MC79L15C	3227-31
79L18	Motorola	MC79L18AC	3227-85
		MC79L18C	3227-79
79L24	Motorola	MC79L24AC	3227-112
		MC79L24C	3227-113
79M00	**Motorola**	**MC79M00**	★3531
79M05	Fairchild	uA79M05C	3226-15
		uA79M05M	3226-16
	National	LM79M05	3226-20
	TI	uA79M05C	3226-24
		uA79M05M	3226-25
79M06	TI	uA79M06C	3226-77
		uA79M06M	3226-78
79M08	Fairchild	uA79M08C	3226-87
	TI	uA79M08C	3226-90
		uA79M08M	3226-91
79M12	Fairchild	uA79M12C	3226-122
		uA79M12M	3226-123
	National	LM79M12	3226-125
	TI	uA79M12C	3226-126
		uA79M12M	3226-127
79M15	Fairchild	uA79M15C	3227-38
		uA79M15M	3227-39
	National	LM79M15	3227-41
		uA79M15C	3227-42
		uA79M15M	3227-43
79M20	TI	uA79M20C	3227-98
		uA79M20M	3227-99
79M24	TI	uA79M24C	3227-114
		uA79M24M	3227-115
7M164	**IDT**	**IDT7M164-100**	★4008
			3782-103
		IDT7M164-100C	
			★4008
			3782-104
		IDT7M164-120	★4008
			3782-106
		IDT7M164-120C	
			★4008
			3782-107
		IDT7M164-150	★4008
			3782-109
		IDT7M164-150C	
			★4008
			3782-110
		IDT7M164-70	★4008
			3782-102
7M464	**IDT**	**IDT7M464-100C**	
			★4004
			3782-67
		IDT7M464-65	★4004
			3782-39
		IDT7M464-65C	★4004
			3782-40
		IDT7M464-85	★4004
			3782-61
		IDT7M464-85C	★4004
			3782-62
7M864	**IDT**	**IDT7M864-120**	★4000
			3781-105
		IDT7M864-120C	
			★4000
			3781-106
		IDT7M864-150	★4000
			3781-111
		IDT7M864-150C	
			★4000
			3781-112
		IDT7M864-200	★4000
			3781-119
		IDT7M864-200C	
			★4000
			(Continued)

Base Number	Source	Device	Page-Line
7M864	**IDT**	**IDT7M864-200C**	
			3781-120
		IDT7M864-85	★4000
			3781-97
7S8	AMD	AMS7S8/8112	1809-1
8	AMD	AMSYS8/8	1809-4
		AMSYS8/8000	
		Series	1809-5
		AMSYS8/8116	1809-6
	Advent	UP8	4351-1
	Burr-Brown	**MPC8D**	★2850
			2624-24
	Burr-Brown	MPC8S	2623-81
	Cromemco	**8PIO**	★2029
	Datel	**ADC-EK8B**	★2862
			2627-42
		ADC-ET8BC	★2862
			2627-46
		ADC-ET8BM	★2862
			2627-45
		ADC-MC8BC	★2862
			2628-44
		ADC-MC8BM	★2862
			2628-45
		DAC-HF8BMM	★2860
			2640-10
		DAC-IC8BC	★2863
			2641-18
		DAC-IC8BM	★2863
			2641-19
		DAC-UP8BC	★2863
			2641-43
		DAC-UP8BM	★2863
			2641-44
		HDAS-8MC	★2861
			2631-5
	Datel	HDAS-8MC	3233-4
	Datel	**HDAS-8MM**	★2861
			2631-6
	Datel	HDAS-8MM	3233-5
		SHM-8MC	3238-3
	Fairchild	**F8**	★1454
			★1457
			1347-95
			¶ 260-7
	Intech	RGBDAC8E	2643-1
			1353-29
		RGBDAC8T	2643-2
			1353-30
	Motorola	MG8PPS	4355-6
	Synertek	**SYZ8S**	★1696
	Synertek	Z8S	1281-18
		Z8SMCU	1348-35
	Western	SMP-E8	1963-35
	Zilog	**Z-SCAN8**	★1758
		Z8-SCB	★1753
			★1755
			★1759
			1955-17
			¶ 265-9
			¶ 271-11
80	**AD**	**ADADC80-12**	★2838
			2632-35
		ADADC80-15	★2838
			2629-41
		ADADC80Z-10	★2838
			2629-42
		ADADC80Z-12	★2838
			2632-36
		ADDAC80/CBI	★2825
			2649-53
			¶ 279-11
		ADDAC80/CCD	★2825
			2656-39
			¶ 279-11
	ApplSys	ACS/80	1963-8
	Bedford	MCS80-0013	1961-27
	Burr-Brown	**ADC80A-10**	★2848
			2635-17
		ADC80A-12	★2848
			2632-41
		DAC80-CBI-V	★2848
			2652-20
		DAC80-CCD-I	★2848
			2656-49
		DAC80/CBI	★2848
			(Continued)

Arranged alphanumerically from left to right.

Base Number	Source	Device	Page-Line
80	**Burr-Brown**	**DAC80/CBI**	**2649-49**
		DAC80Z-CBI-I	**★ 2848**
			2649-43
		DAC80Z-CBI-V	**★ 2848**
			2652-21
		DAC80Z-CCD-I	**★ 2848**
			2656-50
		SHC80	**★ 2849**
			3237-183
	DistComp	DCS/80	1811-5
	EMM-SESCO	SECS80/10A	1961-39
		SECS80/30	1963-14
		SECS80/544	1963-15
		SECS80/86	1967-13
	HybridSys	HSDAC80CBI-I	2651-21
		HSDAC80CBI-V	
			2651-32
	Intel	iSBC80/04	1963-9
		iSBC80/05	1963-10
		iSBC80/10B	1961-29
			¶ 279-4
		iSBC80/20-4	1961-40
			¶ 279-4
		iSBC80/24	1963-4
			¶ 279-4
		iSBC80/30	1963-1
			¶ 279-4
	Kontron	EPP-80	4355-3
		MPP-80	4355-4
		MPP80S	4355-5
	Matrix	PBC-80	1957-12
	Matrox	ZBC-80	1957-1
	MCE	MCE80	3198-8
	MicroNet	**DAC80**	**★ 3044**
			2651-53
		MNADC80	**★ 3043**
			2632-40
	National	BLC-80/05	1963-11
		BLC-80/10	1961-30
		BLC-80/11	1961-31
		BLC-80/11A	1961-32
		BLC-80/11B	1961-33
		BLC-80/14	1961-34
		BLC-80/14A	1961-35
		BLC-80/204	1963-3
		BLC-80/24	1963-29
		BLC-80/28	1963-30
		BLC-80/316	1957-7
	NEC	TK-80A	1963-2
	RCA	MB80C	1955-5
		MB80N	1957-24
	RELMS	RSBC-Z80/32	1955-37
		RSBC-Z80SP	1957-25
		Z80SAM	1955-22
	SGS	Z80-CPU	1348-51
		Z80-CTC	1348-65
		Z80-DART	1348-109
		Z80-DMA	1348-79
		Z80-PIO	1348-85
		Z80-SIO	1348-95
		Z80/A	1279-31
		Z80A-CPU	1348-52
		Z80A-CTC	1348-66
		Z80A-DART	1348-110
		Z80A-DMA	1348-80
		Z80A-PIO	1348-86
		Z80A-SIO	1348-96
	Sourise	**ZAP80/ZAP48/ZAP68**	
			★ 4403
			4357-7
	TeledyneP	TDDAC80I	2648-7
		TDDAC80V	2648-36
	Wintek	**MDS80**	**★ 2062**
	Zendex	ZX-80/15	1963-28
	Zilog	**Z80**	**★ 1738**
			1348-54
			¶ 268-15
			¶ 269-10
			¶ 270-9
			¶ 270-10
			¶ 270-14
			¶ 270-15
			¶ 277-11
	Zilog	Z80	1281-34
	Zilog	**Z80-CTC**	**★ 1738**
			1348-67
			(Continued)

Base Number	Source	Device	Page-Line
80	**Zilog**	**Z80-CTC**	¶ 268-15
			¶ 269-10
			¶ 270-9
			¶ 270-10
			¶ 270-14
			¶ 270-15
			¶ 276-8
			¶ 277-11
		Z80-DART	**★ 1738**
			1348-111
			¶ 268-15
			¶ 269-10
			¶ 270-9
			¶ 270-10
			¶ 270-14
			¶ 270-15
			¶ 277-11
		Z80-DMA	**★ 1738**
			1348-81
			¶ 268-15
			¶ 269-10
			¶ 270-9
			¶ 270-10
			¶ 270-14
			¶ 270-15
			¶ 277-11
		Z80-PIO	**★ 1738**
			1348-87
			¶ 268-15
			¶ 269-10
			¶ 270-9
			¶ 270-10
			¶ 270-14
			¶ 270-15
			¶ 277-11
		Z80-SIO	**★ 1738**
			1348-97
			¶ 268-7
			¶ 268-15
			¶ 269-10
			¶ 270-9
			¶ 270-10
			¶ 270-14
			¶ 270-15
			¶ 277-11
		Z80-SIO/2	**★ 1738**
			1348-98
			¶ 268-15
			¶ 269-10
			¶ 270-9
			¶ 270-10
			¶ 270-14
			¶ 270-15
			¶ 277-11
		Z80-SIO/9	**★ 1738**
			1348-99
			¶ 268-15
			¶ 269-10
			¶ 270-9
			¶ 270-10
			¶ 270-14
			¶ 270-15
			¶ 277-11
		Z80A	**★ 1738**
			1348-55
	Zilog	Z80A	1281-35
	Zilog	**Z80A-CTC**	**★ 1738**
			1348-68
		Z80A-DART	**★ 1738**
			1348-112
		Z80A-DMA	**★ 1738**
			1348-82
		Z80A-PIO	**★ 1738**
			1348-88
		Z80A-SIO/1	**★ 1738**
			1348-100
		Z80A-SIO/2	**★ 1738**
			1348-101
		Z80A-SIO/9	**★ 1738**
			1348-102
		Z80B	**★ 1738**
			1348-56
	Zilog	Z80B	1281-36
	Zilog	**Z80B-CTC**	**★ 1738**
			1348-69
		Z80B-PIO	**★ 1738**
			(Continued)

Base Number	Source	Device	Page-Line
80	**Zilog**	**Z80B-PIO**	**1348-89**
		Z80B-SIO/9	**★ 1738**
			1348-103
		Z80H	**★ 1738**
			1281-37
		Z80L	**★ 1738**
			1348-57
	Zilog	Z80L	1281-38
	Zilog	**Z80MCB/16**	**★ 1738**
			1955-23
		Z80MCB/4	**★ 1738**
			1955-24
800	**Burr-Brown**	**DAC800-CBI-I**	**★ 2848**
			2649-46
		DAC800-CBI-V	**★ 2848**
			2649-47
		~~**MPC800**~~	~~**★ 2850**~~
			2624-23
	DiversTech	CBC800/204	1955-11
		CBC800/208	1955-12
		CBC800/216	1955-13
	Hitachi	TBA800	3164-141
	MicroTech	SG800	4465-41
	Miller	MCPU-800	1957-13
	National	**NSC800**	**★ 1516**
			1348-8
			¶ 264-5
			¶ 265-8
		NSC800-1	**★ 1516**
			1348-6
			¶ 264-5
			¶ 265-8
	National	NSC800-1	1277-19
			¶ 264-5
			¶ 265-8
	National	**NSC800-4**	**★ 1516**
			1348-7
			¶ 264-5
			¶ 265-8
	National	NSC800-4	1277-20
			¶ 264-5
			¶ 265-8
	Onset	CPU-800A	1955-9
	SGS	TBA800	3164-168
	TeledyneS	**TSC800AC**	**★ 3098**
			2636-9
		TSC800AM	**★ 3098**
			2636-10
		TSC800BC	**★ 3098**
			2636-11
		TSC800BM	**★ 3098**
			2636-12
	Telefunken	TBA800	3165-7
	Unitrode	PIC800	3231-45
	Zilog	**Z800**	**★ 1748**
			1348-117
			¶ 277-11
8000	CIC	GAC-8000	4470-14
	Fujitsu	**C8000VH**	**★ 4640**
			4463-21
	Holt	HI8000	1351-147
			1355-45
	Omnibyte	OB8000A	1961-3
	Rockwell	CRC8000	3217-15
	Signetics	**MEA8000**	**★ 3672**
			3169-95
	Zilog	**EMS8000**	**★ 1757**
		PDS8000	**★ 1756**
		Z-SCAN8000	**★ 1757**
		Z8000	**★ 1741**
			★ 1756
			1350-118
			¶ 263-18
			¶ 264-7
			¶ 264-9
			¶ 265-14
			¶ 269-17
			¶ 270-8
			¶ 270-16
			¶ 271-17
			¶ 277-1
			¶ 277-8
			¶ 277-12
			¶ 277-13
			¶ 277-14

Base Number	Source	Device	Page-Line
80000	**Zilog**	**Z80000**	**★ 1749**
			1352-75
80001	MCE	MT80001	593-3
8000MODEL30			
	Zilog	PDS8000MODEL30	
			1819-4
8001	AMD	AMZ8001	1350-116
			1283-30
	Intersil	ICL8001C	3160-16
		ICL8001M	3159-54
	MonSys	MSC8001	1957-15
	Rockwell	CRC8001	3217-16
	SEEQ	**8001**	**★ 1600**
			1353-60
	SGS	Z8001	1350-117
	Zilog	**Z8001**	**★ 1741**
			1350-119
			¶ 264-10
	Zilog	Z8001	1287-24
	Zilog	**Z8001A**	**★ 1741**
			1350-120
			¶ 264-10
	Zilog	Z8001A	1287-25
	Zilog	**Z8001B**	**★ 1741**
			1350-121
			¶ 264-10
	Zilog	Z8001B	1287-26
	Zilog	**Z8001DM**	**★ 1741**
			1965-37
			¶ 264-10
8002	AMD	AMZ8002	1350-111
			1283-31
	Omnibyte	OB8002	1961-4
	SEEQ	**8002**	**★ 1598**
			1353-63
			¶ 299-12
	SGS	Z8002	1350-112
	SSS	SND8002	1353-24
			¶ 255-1
			¶ 264-6
			¶ 264-11
			¶ 264-12
			¶ 288-6
			¶ 306-9
	SMC	CRT8002	3783-107
			¶ 260-4
			¶ 261-18
			1353-25
			¶ 260-4
			¶ 261-18
	Tektronix	8002A	1817-13
	Zilog	**Z8002**	**★ 1741**
			1350-113
			¶ 279-3
	Zilog	Z8002	1287-27
	Zilog	**Z8002A**	**★ 1741**
			1350-114
			¶ 279-3
	Zilog	Z8002A	1287-28
	Zilog	**Z8002B**	**★ 1741**
			1350-115
			¶ 279-3
	Zilog	Z8002B*	1287-29
	Zilog	**Z8002DM**	**★ 1741**
			1965-39
			¶ 279-3
8003	**Zilog**	**Z8003**	**★ 1742**
			1350-122
	Zilog	Z8003	1287-30
	Zilog	**Z8003A**	**★ 1742**
			1350-123
		Z8003B	**★ 1742**
			1350-124
8004	MonSys	MSC8004/A	1957-16
	SMC	COM8004	2665-1
			¶ 277-3
	Zilog	**Z8004**	**★ 1742**
			1350-125
	Zilog	Z8004	1287-31
	Zilog	**Z8004A**	**★ 1742**
			1350-126
		Z8004B	**★ 1742**
			1350-127
8007	Intersil	ICL8007	3189-18
			¶ 281-8
			¶ 295-19
			(Continued)

¶ Indicates page number in Application Note Directory.
★ Indicates addition data is provided on the page noted.

Base Number	Source	Device	Page-Line
8007	Intersil	ICL8007	¶ 308-3
		ICL8007AC	3203-5
			¶ 281-8
			¶ 295-19
			¶ 308-3
		ICL8007AM	3203-6
			¶ 281-8
			¶ 295-19
			¶ 308-3
		ICL8007C	3203-19
			¶ 281-8
			¶ 295-19
			¶ 308-3
		ICL8007M	3202-45
			¶ 281-8
			¶ 295-19
			¶ 308-3
	MonSys	MSC8007/A	1957-17
8008	Intersil	ICL8008C	3198-20
		ICL8008M	3195-28
8009	MonSys	MSC8009/A	1957-18
801	**Burr-Brown**	**MPC801**	★**2850**
			2622-117
	Digelec	UPP-801	4353-8
	Harris	HIDAC801	2650-4
	Siemens	SM801	3217-119
	Unitrode	PIC801	3231-46
8010	DistComp	DCS8010A	1961-38
	Fairchild	FCB8010	3166-64
	SGS	Z8010-MMU	1351-28
	Zilog	**Z8010-Z-MMU**	★**1743**
			1351-29
			¶ 264-10
		Z8010A-Z-MMU	★**1743**
			1351-30
			¶ 264-10
		Z8010B-Z-MMU	★**1743**
			1351-31
			¶ 264-10
8013	Intersil	ICL8013C	3235-35
			¶ 281-8
		ICL8013M	3235-36
			¶ 281-8
80130	Intel	80130	1349-1
8014	Analogic	MP8014	2635-46
8015	Analogic	MP8015	2636-6
	Sanyo	LB8015	641-116
	Zilog	**Z8015-PMMU**	★**1743**
			1351-32
8016	AMD	AMZ8016	1351-11
	Analogic	MP8016	2636-20
	Intech	A8016	2636-17
		A8016-10	2636-15
		A8016-16	2636-16
		A8016-9	2636-14
	Zilog	**Z8016-Z-DTC**	★**1744**
			1351-12
			¶ 277-15
8017	Intersil	ICL8017C	3199-20
		ICL8017M	3196-30
	SMC	COM8017	2686-54
8018	Intersil	ICL8018AC	3238-109
		ICL8018AM	3238-110
	SMC	COM8018	2686-55
80186	Intel	80186	1349-11
80187	Intel	80187	1349-102
8019	Intersil	ICL8019AC	3238-111
		ICL8019AM	3238-112
802	National	CIM-802	1955-6
		CIM-802A	1955-7
	SBE	802	1817-6
	Siemens	SM802	3217-118
8020	Intel	8020H	1344-77
	Intersil	ICL8020AC	3238-113
		ICL8020AM	3238-114
8021	AMD	AM8021	1344-76
	Intel	8021H	1344-78
			¶ 261-17
			1271-16
	Intersil	**ICL8021C**	★**3516**
			3190-51
		ICL8021M	★**3516**
			3190-52
	Signetics	8021	1279-34
	SMC	CRT8021	1353-12
		CRT8021-003	1353-13

Base Number	Source	Device	Page-Line
8022	Analogic	AH8022	2630-22
	Intel	8022	1344-79
			¶ 261-17
	Intersil	**ICL8022C**	★**3516**
			3208-19
		ICL8022M	★**3516**
			3206-4
	Toshiba	TMP8022	1344-80
8023	**Intersil**	**ICL8023C**	★**3516**
			3208-21
		ICL8023M	★**3516**
			3208-22
	Panasonic	MN8023	3173-31
8025	Panasonic	MN8025	640-58
8027	Panasonic	MN8027	3234-105
80286	Intel	80286	1349-12
80287	Intel	80287	1348-143
803	**Burr-Brown**	**ADC803B**	★**2848**
			2630-24
		ADC803C	★**2848**
			2634-19
	Digelec	UP-803	4353-7
	Dionics	DI803A	2663-90
	Panasonic	DN803	3158-148
8030	AMD	AMZ8030	1351-35
	Rockwell	CRC8030	3218-137
	SGS	Z8030-SCC	1351-36
	Zilog	**Z8030-Z-SCC**	★**1744**
			1351-37
			¶ 267-2
			¶ 275-14
			¶ 277-1
			¶ 277-16
		Z8030A-Z-SCC	★**1744**
			1351-38
			¶ 267-2
			¶ 275-14
			¶ 277-1
			¶ 277-16
8031	AMD	AM8031	1345-1
	Intel	8031AH	1345-2
			¶ 274-5
			1271-17
	Siemens	8031	1345-5
	Signetics	**SCN8031**	★**1685**
			★**1687**
			1345-7
	Toshiba	TMP8031	1345-8
	Zilog	**Z8031-Z-ASCC**	★**1745**
			1352-84
8032	Intel	8032	1271-18
8034	SGS	Z8034-UPC	1351-40
8035	AMD	AM8035	1344-3
			1265-31
	Intel	8035AHL	1344-5
			¶ 261-17
			1271-19
		M8035HL	1271-35
		M8035L	1344-13
	National	INS8035	1344-15
			1277-3
		INS8035L	1344-16
			1277-4
	NEC	uPD8035L	1344-21
			1277-30
	Signetics	8035	1279-35
	Signetics	**SCN8035A**	★**1685**
			1344-29
	Toshiba	TMP8035	1344-32
			1281-25
8036	AMD	AMZ8036	1351-4
	SGS	Z8036-CIO	1351-5
	Zilog	**Z8036-Z-CIO**	★**1745**
			1351-6
			¶ 261-14
			¶ 267-2
		Z8036A-Z-CIO	★**1745**
			1351-7
			¶ 261-14
			¶ 267-2
8037	Analogic	MP8037	2636-50
8038	AMD	AMZ8038	1351-18
	Exar	**XR8038**	★**3374**
			3215-25
		XR8038A	★**3374**
			3215-26
			(Continued)

Base Number	Source	Device	Page-Line
8038	**Exar**	**XR8038M**	★**3374**
			3215-27
	Intersil	**ICL8038C**	★**3518**
			3215-28
			¶ 308-7
		ICL8038M	★**3518**
			3215-29
			¶ 308-7
	SGS	Z8038-FIO	1351-19
	Zilog	**Z8038-Z-FIO**	★**1746**
			1351-20
			¶ 263-8
			¶ 267-2
			¶ 272-9
		Z8038A-FIO	★**1746**
			1351-21
			¶ 263-8
			¶ 267-2
			¶ 272-9
8039	AMD	AM8039	1344-4
			1265-32
	Intel	8039AHL	1344-6
			¶ 261-17
			1271-20
		8039HL	1344-7
			¶ 261-17
		M8039HL	1271-36
	National	INS8039	1344-17
			1277-5
		INS8039L	1344-18
			1277-6
	NEC	uPD8039L	1344-22
			1277-31
	Signetics	8039	1279-36
	Signetics	**SCN8039A**	★**1685**
			1344-30
	Toshiba	TMP8039	1344-33
			1281-26
		TMP8039-6	1344-34
804	Digelec	EP-804	4353-4
	Dionics	DI804A	2663-91
	National	CIM-804	1955-14
8040	Intel	8040AHL	1344-8
			1271-21
	National	INS8040	1344-19
			1277-7
		INS8040L	1344-20
			1277-8
	National	**NS8040**	★**1524**
	Rockwell	R8040	3219-41
	Signetics	8040	1279-37
	Signetics	**SCN8040**	★**1685**
			1344-31
8041	AMD	AM8041A	1347-39
	Intel	8041A	1347-40
			¶ 261-17
			¶ 269-16
		8041AH	1344-158
			1346-83
			1354-61
			¶ 261-17
			¶ 269-16
		8041AH-2	1344-159
			1346-84
			¶ 261-17
			¶ 269-16
	NEC	uPD8041	1344-166
			1346-87
			1347-42
		uPD8041A	1344-167
8042	Intel	8042	1344-160
			1354-63
8043	Intersil	ICL8043C	3209-54
			¶ 281-8
		ICL8043M	3209-53
			¶ 281-8
8044	Intel	8044	1344-172
			1354-65
8046	SMC	COM8046	640-18
			¶ 260-4
			2685-23
		COM8046T	640-19
			¶ 260-4
			2685-24
8048	AMD	AM8048	1344-37
			1265-33
			(Continued)

Base Number	Source	Device	Page-Line
8048	Cybernetic	CYP8048/9	4351-11
	Intel	8048	1344-39
			¶ 261-17
			¶ 269-16
		8048AH	1344-40
			¶ 261-17
			¶ 269-16
			1271-22
			¶ 261-17
			¶ 269-16
		8048H	1344-41
			¶ 261-17
			¶ 269-16
		M8048H	1344-50
	Intersil	ICL8048C	3155-129
			¶ 281-8
			¶ 297-10
	National	INS8048	1344-55
			¶ 266-10
			1277-9
		INS8048L	1344-56
			¶ 266-10
			1277-10
	NEC	uPD8048	1344-61
			1277-32
	Signetics	8048	1279-38
	Signetics	**SCN8048A**	★**1685**
			1344-68
	Toshiba	TMP8048	1344-71
			1281-27
8049	AMD	AM8049	1344-38
			1265-34
	Intel	8049AH	1344-42
			¶ 261-17
			¶ 262-14
			1271-23
			¶ 261-17
			¶ 262-14
		8049H	1344-43
			¶ 261-17
			¶ 262-14
		8049HL	1344-44
			¶ 261-17
			¶ 262-14
		M8049H	1344-51
	Intersil	ICL8049C	3155-124
			¶ 281-8
			¶ 297-10
	National	INS8049	1344-57
			1277-11
		INS8049L	1344-58
			1277-12
	NEC	uPD8049	1344-62
			1277-33
	Signetics	8049	1279-39
	Signetics	**SCN8049A**	★**1685**
			1344-69
	Toshiba	TMP8049	1344-72
			1281-28
805	Dionics	DI805A	2663-92
	TeledyneS	**TSC805**	★**3099**
8050	Intel	8050AH	1344-45
			1271-24
	National	INS8050	1344-59
			1277-13
		INS8050L	1344-60
			1277-14
	National	**NS8050**	★**1524**
	Rockwell	R8050	3218-62
	Signetics	8050	1279-40
	Signetics	**SCN8050**	★**1685**
80503	Signetics	SCN80503	1344-70
8051	AMD	AM8051	1345-9
	Cybernetic	CYP8051	4351-12
	Intel	8051AH	1345-10
			¶ 274-5
			1271-25
	Intersil	8051	1345-14
	Siemens	8051	1345-16
	Signetics	**SCN8051**	★**1685**
			★**1687**
			1345-18
	Toshiba	TMP8051	1345-19
8052	**AMD**	**AM8052**	★**1433**
			1352-98
	AMD	AMZ8052	1351-8
			(Continued)

Arranged alphanumerically from left to right.

© IC MASTER 1984

Base Number	Source	Device	Page-Line
8052	Intel	8052	1345-11
			1271-26
	Intersil	ICL8052	2637-32
			¶ 276-6
			¶ 284-13
		ICL8052A	2635-34
			2636-2
			2636-49
			¶ 276-6
			¶ 281-8
			¶ 284-13
			¶ 307-14
			¶ 308-3
8053	Intersil	ICL8053	2637-33
		ICL8053A	2637-52
8060	AMD	AMZ8060	1351-15
	National	INS8060	1347-119
			¶ 260-15
			¶ 262-4
			1277-15
			¶ 260-15
			¶ 262-4
	Rockwell	R8060	3218-61
	SGS	Z8060-FIFO	1351-16
	Zilog	**Z8060-Z-FIFO**	★ **1746**
			1351-17
8063	Intersil	ICL8063C	3164-69
		ICL8063M	3164-70
8065	AMD	AMZ8065	1351-1
			1355-5
	Zilog	**Z8065-Z-BEP**	★ **1747**
			1351-2
8068	AMD	AMZ8068	1351-9
	Intersil	ICL8068	2637-34
			¶ 284-13
		ICL8068A	2637-53
			¶ 284-13
	Zilog	**Z8068-Z-DCP**	★ **1747**
			1351-10
8069	**Intersil**	**ICL8069**	★ **3521**
			3236-75
		ICL8069M	★ **3521**
			3236-76
807	**Datel**	**MVD-807**	★ **2864**
			2623-115
		MVD-807M	★ **2864**
			2623-116
		MXD-807	★ **2864**
			2624-25
		MXD-807M	★ **2864**
			2624-26
8070	**Zilog**	**Z8070-Z-APU**	★ **1750**
			1348-116
			1350-128
			1352-76
			¶ 265-15
8071	Sanyo	LM8071	3167-96
8073	AMD	AMZ8073	1351-39
	Intersil	ICL8073	3238-129
	National	INS8073	1344-75
			1277-16
8074	Intersil	ICL8074	3238-130
808	**Datel**	**MV-808**	★ **2864**
			2623-28
		MV-808M	★ **2864**
			2623-29
		MX-808	★ **2864**
			2623-83
		MX-808M	★ **2864**
			2623-84
	PMI	**DAC-808A**	★ **3567**
			1354-90
		DAC-808B	★ **3567**
			1354-91
		DAC-808E	★ **3567**
			1354-92
		DAC-808F	★ **3567**
			1354-93
		DAC-808G	★ **3567**
			1354-94
8080	AMD	AM8080A	1345-21
			1267-1
		AM8080A-1	1345-22
		AM8080A-2	1345-23
		AM8080A-4	1345-24
	Intel	8080A	1345-27
			(Continued)
8080	Intel	8080A	¶ 260-17
			¶ 261-7
			¶ 268-10
			¶ 270-2
			1271-27
			¶ 260-17
			¶ 261-7
			¶ 268-10
			¶ 270-2
		8080A-1	1345-28
			¶ 260-17
			¶ 270-2
		8080A-2	1345-29
			¶ 260-17
			¶ 270-2
		M8080A	1345-30
	National	INS8080A	1345-33
			¶ 260-3
			¶ 274-15
			¶ 280-13
			¶ 320-12
			¶ 322-4
			1277-17
			¶ 260-3
			¶ 274-15
			¶ 280-13
			¶ 320-12
			¶ 322-4
		INS8080A-1	1345-34
		INS8080A-2	1345-35
	NEC	uPD8080A	1345-36
		uPD8080A-1	1345-37
		uPD8080A-2	1345-38
		uPD8080AF	1277-34
8085	**AMD**	**AM8085A**	★ **1435**
			1346-92
	AMD	AM8085A	1267-2
	AMD	**AM8085A-2**	★ **1435**
			1346-93
	Intel	8085AH	1346-95
			¶ 274-6
			1271-28
		8085AH-2	1346-96
			¶ 274-6
		M8085A	1346-97
		M8085AH	1346-98
	NEC	uPD8085A	1346-100
		uPD8085A-2	1346-101
			1277-35
	OKI	**MSM8085**	★ **4118**
	Onset	CPU-8085	1961-26
	Toshiba	TMP8085A	1346-102
			1281-29
		TMP8085A-2	1281-30
8086	**AMD**	**AM8086**	★ **1429**
			★ **1432**
			1349-5
			★ **1429**
			★ **1432**
			1283-29
		AM8086-1	★ **1429**
			★ **1432**
			1349-6
		AM8086-2	★ **1429**
			★ **1432**
			1349-7
	Fujitsu	MBL8086	1349-8
			1285-7
		MBL8086-1	1349-9
			1285-8
		MBL8086-2	1349-10
			1285-9
	Intel	8086	1349-13
			¶ 263-9
		8086-1	1349-14
			¶ 263-9
		8086-2	1349-15
			¶ 263-9
		M8086	1349-16
	Mostek	MK8086	1287-2
	NEC	uPD8086	1349-19
		uPD8086-2	1287-4
	Siemens	SAB8086	1287-7
		SAB8086-1	1287-8
		SAB8086-2	1287-9
		SAB8086-4	1287-10
			(Continued)
8086	Siemens	SAB8086C	1349-20
		SAB8086C-4C	1349-21
8087	**AMD**	**AM8087**	★ **1432**
			1349-101
	Intel	8087	1349-103
8088	**AMD**	**AM8088**	★ **1429**
			1349-107
	AMD	AM8088	1283-14
	Fujitsu	MBL8088	1349-108
		MBL8088-2	1349-109
	Intel	8088	1349-111
		8088-2	1349-112
	NEC	uPD8088	1283-22
8089	**AMD**	**AM8089**	★ **1432**
			1283-15
	Fujitsu	MBL8089	1349-29
	Intel	8089	1349-30
			1283-19
809	SBE	809	1817-7
8090	National	DM8090	625-52
	Zilog	**Z8090-Z-UPC**	★ **1755**
			1351-24
8091	National	DM8091	621-44
8092	National	DM8092	620-96
8093	National	DM8093	605-167
			¶ 259-6
8094	National	DM8094	605-141
			¶ 259-6
8095	National	DM8095	606-30
8096	Intel	8096	1351-55
	National	DM8096	606-172
8097	National	DM8097	606-31
8098	National	DM8098	606-173
8099	National	DM8099	621-34
80 System 2			
	Cromemco	Z80 System 2	1811-1
80 System 3			
	Cromemco	Z80 System 3	1811-2
80A35	Intel	80A35	1344-9
80A39	Intel	80A39	1344-10
80A48	Intel	80A48L	1344-46
80A49	Intel	80A49	1344-47
80C31	Intel	80C31	1345-3
			1271-29
		M80C31	1273-1
	Intersil	80C31	1345-4
	Signetics	**SCC80C31**	★ **1638**
			1345-6
80C35	Intel	80C35	1344-11
	NEC	**μPD80C35**	★ **1571**
			1344-23
	NEC	uPD80C35	1277-36
	OKI	**MSM80C35**	★ **4118**
			1344-24
	OKI	MSM80C35	1277-39
	Signetics	**SCC80C35**	★ **1686**
			1344-26
	Toshiba	TMP80C35	1344-35
80C39	Intel	80C39	1344-12
			1271-30
		M80C39	1273-2
	OKI	**MSM80C39**	★ **4118**
			1344-25
	OKI	MSM80C39	1277-40
	Signetics	**SCC80C39**	★ **1686**
			1344-27
	Toshiba	TMP80C39	1281-31
		TMP80C39P-6	1344-36
80C40	**Signetics**	**SCC80C40**	★ **1686**
			1344-28
80C48	Intel	80C48	1344-48
	NEC	**μPD80C48**	★ **1571**
			1343-141
	NEC	uPD80C48	1277-37
	OKI	**MSM80C48**	★ **4118**
			1344-63
	OKI	MSM80C48	1277-41
	Signetics	**SCC80C48**	★ **1686**
			1344-65
	Toshiba	TMP80C48	1343-142
80C49	Intel	80C49	1344-49
			1271-31
		M80C49	1273-3
	OKI	**MSM80C49**	★ **4118**
			(Continued)
80C49	**OKI**	**MSM80C49**	**1344-64**
	Signetics	**SCC80C49**	★ **1686**
			1344-66
	Toshiba	TMP80C49	1281-32
		TMP80C49P-6	1344-73
80C50	**Signetics**	**SCC80C50**	★ **1686**
			1344-67
80C51	Intel	80C51	1345-12
			1271-32
		M80C51	1345-13
			1273-4
	Intersil	80C51	1345-15
	Signetics	**SCC80C51**	★ **1688**
			1345-17
80C55	Harris	80C55A	1346-159
80C85	**OKI**	**MSM80C85A**	★ **4118**
			1279-1
80C86	**Harris**	**80C86**	★ **1479**
			★ **1486**
			1349-3
			★ **1479**
			★ **1486**
			1285-11
80C88	**Harris**	**80C88**	★ **1480**
			1349-110
80C95	National	MM80C95	573-54
80C96	National	MM80C96	573-178
80C97	National	MM80C97	573-55
80C98	National	MM80C98	573-179
81	PMI	SMP81E	3238-64
		SMP81F	3238-65
	Wintek	**MCM81**	★ **2062**
810	**Datel**	**ADC-810MC**	★ **2860**
			2630-30
		ADC-810MM	★ **2860**
			2630-31
	Digelec	GP-810 Gang Programmer	4353-6
	Hitachi	TBA810	3164-142
	National	NSC810	1348-14
		NSC810-1	1348-15
		NSC810-4	1348-16
	SGS	TBA810	3164-169
			¶ 296-11
	Telefunken	TBA810	3165-8
	TI	TL810C	3159-55
		TL810M	3159-20
	Unitrode	PIC810	3231-47
8100	Lambda	LAS8100	2679-49
			¶ 312-2
	National	MM8100	3216-125
8101	Lambda	LAS8101	2679-50
			¶ 311-13
8103	AMD	AMZ8103	1351-45
8104	AMD	AMZ8104	1351-46
	Rockwell	R8104-3	3777-98
8107	AMD	AMZ8107	1351-47
8108	AMD	AMZ8108	1351-48
	ETIMicro	8108	1963-5
	Zilog	Z8108	1348-115
			1281-39
810H8	**SPI**	**SP810H8**	★ **4826**
			4483-51
810L8	**SPI**	**SP810L8**	★ **4826**
			4483-52
811	**Datel**	**ADC-811MC**	★ **2860**
			2630-37
		ADC-811MM	★ **2860**
			2630-38
	TI	TL811C	3161-30
		TL811M	3161-11
	Unitrode	PIC811	3231-48
8114	Rockwell	R8114-3	3777-99
8116	Analogic	MP8116	2658-7
	GI	AY5-8116	2685-51
		AY5-8116T	2685-52
	SMC	COM8116	640-7
			2685-55
		COM8116T	640-8
			2685-56
8117	Fujitsu	MB8117-10	3768-60
		MB8117-12	3768-67
8118	Fujitsu	MB8118-10	3768-61
		MB8118-12	3768-68
8120	AMD	AMZ8120	1351-51

¶ Indicates page number in Application Note Directory.
★ Indicates addition data is provided on the page noted.

Base Number	Source	Device	Page-Line
8121	AMD	AMZ8121	1351-54
	National	DM8121	630-4
8123	National	DM8123	629-60
81256	Fujitsu	MB81256-10	3769-127
			3782-4
		MB81256-12	3770-1
		MB81256-15	3770-9
81257	Fujitsu	MB81257-10	3769-128
		MB81257-12	3770-2
		MB81257-15	3770-10
8126	Sprague	ULN-8126	3230-125
		ULQ-8126	3230-128
		ULS-8126	3230-129
	SMC	COM8126	640-20
			2685-25
		COM8126T	640-21
			2685-26
8127	AMD	AMZ8127	1351-3
8128	Fujitsu	MB8128-10	3778-14
		MB8128-15	3778-74
812H6	**SPI**	**SP812H6**	**★4826**
			4483-53
812L6	**SPI**	**SP812L6**	**★4826**
			4483-54
813	**Datel**	**ADC-813**	**★2860**
8130	National	DM8130	603-148
8131	National	DM8131	603-85
8133	AMD	AMZ8133	1351-49
8136	AMD	AMZ8136	1351-53
	GI	AY5-8136	2685-53
		AY5-8136T	2685-54
	National	DM8136	603-87
	SMC	COM8136	640-9
			2685-57
		COM8136T	640-10
			2685-58
8140	AMD	AMZ8140	1351-43
81416	Fujitsu	MB81416-10	3769-21
		MB81416-12	3769-22
		MB81416-15	3769-23
8144	AMD	AMZ8144	1351-44
8146	SMC	COM8146	640-22
			2685-27
		COM8146T	640-23
			2685-28
8148	AMD	AMZ8148	1351-52
	Intel	8148	3781-96
814H4	**SPI**	**SP814H4**	**★4826**
			4483-55
814L4	**SPI**	**SP814L4**	**★4826**
			4483-56
815	Datel	ADC-815MC	2625-46
		ADC-815MM	2625-47
8152	**AMD**	**AM8152**	**★1433**
			1351-41
			1354-68
8153	AMD	AM8153	1351-42
			1354-69
8154	National	INS8154	1346-57
			1348-2
8155	AMD	AM8155	1344-136
			1347-15
		AM8155-2	1344-137
			1347-16
	Intel	8155	1344-140
			1347-19
		8155-2	1344-141
			1347-20
		8155H	1344-142
		8155H-2	1344-143
		M8155	1347-23
		M8155H	1344-148
	NEC	uPD8155	1344-149
			1347-26
	OKI	MSM8155	1347-28
	Toshiba	TMP8155	1344-151
8156	AMD	AM8156	1344-138
			1347-17
		AM8156-2	1344-139
			1347-18
	Intel	8156	1344-144
			1347-21
		8156-2	1344-145
			1347-22
		8156H	1344-146
		8156H-2	1344-147
			(Continued)

Base Number	Source	Device	Page-Line
8156	NEC	uPD8156	1344-150
			1347-27
	Toshiba	TMP8156	1344-152
816	**Datel**	**ADC-816MC**	**★2860**
			2629-2
		ADC-816MM	**★2860**
			2629-3
8160	AMD	AMZ8160	1351-14
	National	DM8160	603-79
	Sprague	ULN-8160	3230-126
		ULS-8160	3230-130
8161	AMD	AMZ8161	1351-25
	Sprague	ULN-8161	3230-127
8162	AMD	AMZ8162	1351-26
8163	AMD	AMZ8163	1351-27
8164	AMD	AMZ8164B	1351-13
8165	AMD	AMZ8165	1351-33
8166	AMD	AMZ8166	1351-34
8167	Fujitsu	MB8167A-45	3782-21
		MB8167A-55	3782-32
		MB8167A-70	3782-46
		MB8167A-70W	
			3782-47
		MBM8167A-85W	
			3782-63
8168	Fujitsu	MB8168-45	3781-19
		MB8168-70	3781-62
		MB8168-70W	3781-63
		MBM8168-85W	
			3781-83
816C1	**SPI**	**SP816C1**	**★4826**
			4483-108
816H2	**SPI**	**SP816H2**	**★4826**
			4483-57
816L2	**SPI**	**SP816L2**	**★4826**
			4483-58
816L8	**SPI**	**SP816L8**	**★4826**
			4483-59
816R4	**SPI**	**SP816R4**	**★4826**
			4483-60
816R6	**SPI**	**SP816R6**	**★4826**
			4483-61
816R8	**SPI**	**SP816R8**	**★4826**
			4483-62
817	**Datel**	**ADC-817MC**	**★2860**
			2630-26
		ADC-817MM	**★2860**
			2630-27
8173	AMD	AMZ8173	1351-50
818	**Datel**	**MX-818**	**★2864**
			2623-77
		MX-818M	**★2864**
			2623-78
8184	Sprague	UDN-8184A	2663-95
8185	Intel	8185	1347-29
		8185-2	1347-30
		M8185	1347-31
81C55	**OKI**	**MSM81C55**	**★4118**
81LS95	National	DM81LS95	606-109
81LS96	National	DM81LS96	607-112
81LS97	National	DM81LS97	606-110
81LS98	National	DM81LS98	607-113
82	**Burr-Brown**	**ADC82A**	**★2848**
			2636-19
		DAC82K	**★2848**
			2641-15
		DAC82S	**★2848**
			2641-14
	HybridSys	HSADC82	2626-32
	MCE	MCE82	3209-46
820	Fairchild	TBA820	3164-79
	ITT	DF820	3216-165
	SGS	TBA820	3164-114
			¶ 296-12
		TBA820M	3164-115
			¶ 296-12
	TI	TL820C	3161-13
		TL820M	3160-49
8200	National	DM8200	603-39
	Raytheon	RC8200	632-16
		RM8200	632-17
8201	Raytheon	RC8201	632-18
		RM8201	632-19
8202	Intel	8202A	2680-106
			¶ 263-9
			1345-117
			(Continued)

Base Number	Source	Device	Page-Line
8202	Intel	8202A	1346-119
			1349-54
	National	INS8202	1345-82
	Raytheon	RC8202	633-27
		RM8202	633-28
	Signetics	S8202	633-29
8203	Intel	8203	2680-107
			¶ 321-9
			1345-118
			1346-120
			1349-55
	National	INS8203	1345-83
	Raytheon	RC8203	633-30
		RM8203	633-31
8204	Cherry	CS8204	3219-23
	Mitel	ML8204	3219-25
			¶ 299-5
8205	Cherry	CS8205	3219-24
	Intel	8205	2680-108
			1344-93
			1345-111
			1346-118
	Mitel	ML8205	3219-26
			¶ 299-5
8206	Intel	8206	2665-18
			1345-121
	Western	**WD8206**	**★4260**
			2665-19
82062	Intel	82062	1354-73
8207	**Western**	**WD8207**	**★4262**
			2680-111
8208	National	INS8208	1345-76
821	ITT	DF821	3216-166
8210	National	DM8210	630-9
			¶ 257-11
8211	**Intersil**	**ICL8211C**	**★3522**
			★3523
			3239-10
			¶ 281-8
			¶ 312-10
		ICL8211M	**★3522**
			★3523
			3239-11
			¶ 281-8
			¶ 312-10
	National	DM8211	630-10
8212	AMD	AM8212C	1345-139
		AM8212M	1345-140
	Intel	8212	1345-142
			¶ 260-17
		M8212	1345-143
	Intersil	**ICL8212C**	**★3522**
			★3523
			3239-12
			¶ 281-8
			¶ 312-10
		ICL8212M	**★3522**
			★3523
			3239-13
			¶ 281-8
			¶ 312-10
	National	DP8212	1345-145
			1348-4
			¶ 274-15
		DP8212M	1345-146
			¶ 274-15
		INS8212	1345-147
			1348-5
	NEC	uPB8212	1345-148
8214	Intel	8214	1344-110
		M8214	1351-142
			1355-40
	National	DM8214	627-164
			¶ 259-6
	NEC	uPB8214	1344-111
			1355-43
8216	AMD	AM8216	1345-55
		M8216	1345-59
	Intel	8216	1344-84
			1345-61
			1346-104
		M8216	1345-63
	National	DP8216	1345-69
			¶ 274-15
		DP8216M	1345-70
			¶ 274-15
			(Continued)

Base Number	Source	Device	Page-Line
8216	National	INS8216	1345-77
	NEC	uPB8216	1344-86
			1345-79
			1346-106
8218	Intel	8218	1345-81
8219	Intel	8219	1346-108
	National	DM8219	630-91
822	Analogic	AD/AM-822	2632-28
	ITT	DF822	3216-167
8220	National	DM8220	639-109
8223	National	DM8223	613-40
8224	AMD	AM8224C	1345-85
		AM8224M	1345-86
	Intel	8224	1345-87
			¶ 260-17
		M8224	1345-88
	National	DP8224	1345-89
			¶ 274-15
		INS8224	1345-90
	NEC	uPB8224	1345-91
8226	AMD	AM8226	1345-56
		M8226	1345-60
	Intel	8226	1344-85
			1345-62
			1346-105
		M8226	1345-64
	National	DP8226	1345-71
			¶ 274-15
		DP8226M	1345-72
			¶ 274-15
		INS8226	1345-78
	NEC	uPB8226	1344-87
			1345-80
			1346-107
8228	AMD	AM8228C	1346-69
		AM8228M	1346-70
	Intel	8228	1346-73
			¶ 260-17
		M8228	1346-75
	National	DP8228	1346-77
			¶ 274-15
		DP8228M	1346-78
			¶ 274-15
		INS8228	1346-81
	NEC	uPB8228	1346-2
	TI	TIM8228	1346-5
82284	Intel	82284	1349-23
82288	Intel	82288	1349-22
823	ITT	DF823	3217-1
8230	National	DM8230	612-5
			¶ 259-6
	Raytheon	RC8230	629-131
		RM8230	629-133
8231	Intel	8231A	1345-48
			1354-113
		M8231A	1345-49
	Raytheon	RC8231	629-143
		RM8231	629-144
8232	Intel	8232	1345-122
			1355-15
	Raytheon	RC8232	629-132
		RM8232	629-134
8233	Raytheon	RC8233	629-10
		RM8233	629-11
	Signetics	S8233	629-15
8234	Raytheon	RC8234	628-84
		RM8234	628-85
	Signetics	N8234	628-86
		S8234	628-87
8237	AMD	AM8237A	1346-146
	Intel	8237	1354-36
		8237A	1346-148
		8237A-4	1346-149
		8237A-5	1346-150
8238	AMD	AM8238C	1346-71
		AM8238M	1346-72
	Intel	8238	1346-74
	National	DP8238	1346-79
			¶ 274-15
		DP8238M	1346-80
			¶ 274-15
		INS8238	1346-82
	TI	TIM8238	1346-6
824	Analogic	AD/AM-824	2635-48
8241	Motorola	MC8241	624-159
	Raytheon	RC8241	624-163
			(Continued)

Arranged alphanumerically from left to right.

© IC MASTER 1984

Base Number	Source	Device	Page-Line
8241	Raytheon	RM8241	624-164
	Signetics	S8241	624-131
8242	Motorola	MC8242	625-26
	Raytheon	RC8242	625-27
		RM8242	625-28
	Signetics	**N8242**	**★ 876**
			625-29
			625-44
			625-44
	Signetics	S8242	625-45
8243	Fujitsu	MBL8243	1344-100
		MBL8243E	1345-131
		MBL8243N	1345-132
	Intel	8243	1344-102
			1345-135
			1346-131
			1354-59
		M8243	1344-103
	National	INS8243	1344-104
	NEC	uPD8243	1344-105
			1346-133
	Raytheon	RC8243	639-8
		RM8243	639-9
	Toshiba	TMP8243P	1345-136
8244	National	INS8244	1345-159
8245	National	INS8245	1345-160
8246	National	INS8246	1345-161
8247	National	INS8247	1345-115
8248	National	INS8248	1345-116
	Siemens	SAB8248A	1349-51
825	Analogic	AD/AM-825	2636-7
	Datel	**ADC-825MC**	**★ 2860**
			2626-2
		ADC-825MM	**★ 2860**
			2626-3
8250	Motorola	MC8250	612-24
	National	DP8250	1345-50
	National	**INS8250**	**★ 1514**
			2686-61
			¶ 260-3
	National	INS8250	1345-51
	Raytheon	RC8250	612-26
		RM8250	612-27
	Signetics	S8250	612-29
	Western	WD8250	2685-20
82501	Intel	82501	1354-7
8251	**AMD**	**AM8251**	**★ 1436**
			1346-8
			1346-142
		AM8251A	**★ 1436**
			1344-112
	Intel	8251	2686-22
			¶ 260-17
			1343-140
		8251A	1344-113
			1346-10
			1346-143
			¶ 260-17
		M8251A	1346-11
	National	INS8251	1346-13
			¶ 274-15
	NEC	uPD8251	2686-23
			1344-114
			1346-14
			1346-145
		uPD8251A	1346-15
	Raytheon	RC8251	612-82
		RM8251	612-84
	SMC	COM8251A	1346-21
			¶ 260-4
	Toshiba	TMP8251A	1344-115
8252	Raytheon	RC8252	612-83
		RM8252	612-85
8253	**AMD**	**AM8253**	**★ 1436**
			1344-124
			1346-38
		AM8253-5	**★ 1436**
			1347-3
	Intel	8253	1344-125
			1346-39
			1354-38
		8253-5	1347-4
		M8253	1347-1
	National	INS8253	1346-40
		INS8253-5	1346-41
			1347-5
			(Continued)

Base Number	Source	Device	Page-Line
8253	NEC	uPD8253	1344-126
			1346-42
			1347-6
		uPD8253-5	1344-127
			1346-43
			1347-7
8254	Intel	8254	1346-23
			1354-39
	National	INS8254	1346-49
8255	**AMD**	**AM8255A**	**★ 1437**
			1344-128
			1346-44
		AM8255A-5	**★ 1437**
			1344-129
			1346-45
			1347-9
	Intel	8255A	1344-130
			1346-47
			1354-41
		8255A-5	1347-10
		M8255A	1346-48
	National	INS8255	1346-50
			1348-1
			¶ 274-15
	NEC	uPD8255	1344-131
			1346-51
		uPD8255A-5	1344-132
			1346-52
			1347-11
	OKI	MSM8255A	1346-53
	Toshiba	TMP8255A-5	1347-12
8256	Intel	8256	1346-1
			1349-59
	Siemens	SAB8256A	1344-109
			1346-139
			1349-60
8257	**AMD**	**AM8257**	**★ 1438**
			1346-24
			1346-153
	Intel	8257	1346-27
			1346-155
			1354-37
			¶ 260-17
			¶ 261-7
		8257-5	1346-28
			1346-156
			¶ 260-17
			¶ 261-7
		M8257	1346-29
			1346-151
	NEC	uPD8257	1346-30
			1346-157
		uPD8257-5	1346-31
			1346-158
82586	Intel	82586	1354-8
8259	Fujitsu	MBL8259A	1349-62
	Intel	8259	1344-116
		8259-5	1344-117
		8259A	1344-118
			1346-32
			1346-160
			1349-63
		8259A-2	1344-119
			1346-33
			1346-161
		8259A-8	1344-120
			1346-34
			1346-162
		M8259A	1346-163
	National	INS8259	1346-35
	NEC	uPD8259	1344-121
			1346-36
			1346-165
		uPD8259-5	1344-122
			1346-37
			1346-166
		uPD8259A	1349-64
	Siemens	SAB8259A	1349-65
		SAB8259A-2	1349-66
		SAB8259A-8	1349-67
	Toshiba	TMP8259A	1344-123
826	Analogic	AD/AM-826	2636-18
	Datel	**ADC-826MC**	**★ 2860**
			2629-12
		ADC-826MM	**★ 2860**
			(Continued)

Base Number	Source	Device	Page-Line
826	**Datel**	**ADC-826MM**	**2629-13**
	TelodyneS	**TSC826**	**★ 3100**
8260	Motorola	MC8260	604-14
	Raytheon	RC8260	604-15
		RM8260	604-16
8261	Motorola	MC8261	603-157
	Raytheon	RC8261	603-158
		RM8261	603-159
8262	Raytheon	RC8262	639-73
		RM8262	639-74
	Signetics	**N8262**	**★ 876**
			639-77
	Signetics	S8262	639-78
8263	Raytheon	RC8263	629-113
		RM8263	629-114
8264	Fujitsu	MB8264-15	3769-61
			¶ 320-15
		MB8264-20	3769-90
			¶ 320-15
		MB8264A-10	3769-36
			¶ 320-15
		MB8264A-12	3769-43
			¶ 320-15
		MB8264A-15	3769-62
			¶ 320-15
		MB8264A-15W	
			3769-32
			¶ 320-15
		MB8264A-20W	
			3769-33
			¶ 320-15
	Raytheon	RC8264	629-115
		RM8264	629-116
8265	Fujitsu	MB8265-15	3769-63
		MB8265-20	3769-91
		MB8265A-10	3769-37
		MB8265A-12	3769-44
		MB8265A-15	3769-64
8266	Fujitsu	MB8266A-10	3769-38
		MB8266A-12	3769-45
		MB8266A-15	3769-65
	Motorola	MC8266	628-79
	Raytheon	RC8266	628-80
		RM8266	628-81
	Signetics	**N8266**	**★ 876**
			628-82
	Signetics	S8266	628-83
8267	Motorola	MC8267	629-56
	Raytheon	RC8267	629-57
		RM8267	629-58
827	**Datel**	**ADC-827MC**	**★ 2860**
			2630-34
		ADC-827MM	**★ 2860**
			2630-35
8270	Motorola	MC8270	631-113
			3788-57
	Raytheon	RC8270	631-114
			3788-59
		RM8270	631-115
			3788-61
	Signetics	S8270	616-189
			3788-53
8271	Intel	8271	1344-94
			1345-123
			1346-125
			1353-108
		8271-6	1344-95
	Motorola	MC8271	631-121
			3788-58
	Raytheon	RC8271	631-122
			3788-60
		RM8271	631-123
			3788-62
	Signetics	**N8271**	**★ 876**
			631-124
	Signetics	N8271	3788-52
		S8271	631-125
			3788-54
8272	Intel	8272A	1353-114
82720	Intel	82720	1353-131
8273	Intel	8273	1344-156
			1346-63
			1347-37
	Raytheon	RC8273	633-37
			3791-17
		RM8273	633-38
			(Continued)

Base Number	Source	Device	Page-Line
8273	Raytheon	RM8273	3791-18
	Signetics	**N8273**	**★ 876**
			633-39
	Signetics	N8273	3791-19
		S8273	633-40
			3791-20
82730	Intel	82730	1349-71
			1353-5
82731	Intel	82731	1349-72
			1353-26
8274	Intel	8274	1346-67
			1354-87
	Raytheon	RC8274	633-34
			3791-14
		RM8274	633-35
			3791-15
	Signetics	**N8274**	**★ 876**
			633-36
	Signetics	S8274	3791-16
8275	Intel	8275	1344-90
			1345-95
			1346-110
			1354-34
			¶ 260-17
	Western	**WD8275**	**★ 3109**
			1354-35
8276	Intel	8276	1345-96
			1354-45
	Western	**WD8276**	**★ 3110**
			1352-100
8277	Raytheon	RC8277	633-23
			3791-9
		RM8277	633-24
			3791-10
	Signetics	N8277	3791-11
8279	**AMD**	**AM8279**	**★ 1439**
			1345-151
		AM8279-5	**★ 1439**
			1345-152
		AM8279-8	**★ 1439**
			1345-153
	Intel	8279	1345-154
			1354-4
			¶ 260-17
		8279-5	1345-155
			¶ 260-17
	NEC	uPD8279-5	1345-158
8280	National	DM8280	609-184
	Raytheon	RC8280	609-186
		RM8280	609-188
	Signetics	S8280	609-190
8281	Fujitsu	MB8281	3769-34
	Motorola	MC8281	607-130
	National	DM8281	607-137
	Raytheon	RC8281	607-139
		RM8281	607-141
	Signetics	S8281	607-143
8282	Fujitsu	MBL8282	1349-94
	Intel	8282	1349-96
		M8282	1349-97
	NEC	uPD8282	1349-99
	Siemens	SAB8282	1349-100
8283	Fujitsu	MBL8283	1349-87
	Intel	8283	1349-89
		M8283	1349-90
	NEC	uPD8283	1349-92
	Siemens	SAB8283	1349-93
8284	Fujitsu	MBL8284A	1349-44
	Intel	8284A	1349-46
		8284A-1	1349-47
		M8284	1349-48
	NEC	uPD8284	1349-50
	Raytheon	RC8284	609-117
		RM8284	609-118
	Signetics	S8284	609-119
8285	Raytheon	RC8285	610-173
		RM8285	610-174
8286	Fujitsu	MBL8286	1349-80
	Intel	8286	1349-82
		M8286	1344-170
			1346-89
			1347-44
			1349-83
	NEC	uPD8286	1349-85
	Siemens	SAB8286	1349-86

¶ Indicates page number in Application Note Directory.
★ Indicates addition data is provided on the page noted.

IC MASTER

INTERNATIONAL DISTRIBUTORS

ARGENTINA, COLUMBIA, ECUADOR, VENEZUELA, MEXICO, PERU
Intectra
2629 Terminal Blvd.
Mt. View, CA 94043
Tel. (415) 967-8818

AUSTRALIA
A J Distributors Pty Ltd.
P.O. Box 71
Prospect, S. Australia 5082
Tel. 269-1244
Telex (790) 82635

AUSTRIA
Becos Electronic Ges. M.G.H.
Gablenzgasse 52
A-1160 Vienna, Austria
Tel. 0222/959145
Telex (847) 134606

BELGIUM
J. P. LeMaire S.A.
Limberg, Stirum 243
1810 Wemmel, Belgium
Tel. 02/4784847
Telex (846) 24610

BRAZIL
Filcres Importacao
Rua Aurora
CEP 01209
Caixa Postal 18767
Sao Paulo, Brazil
Tel. (011) 223 7388
Telex (391) 113298

CANADA
Future Electronics
237 Hymus Blvd.
Pointe Claire
Quebec H9R 5C7
Canada
Tel. 514-694-7710
TWX: 610-421-3251
Telex 05-823554

DENMARK
Advanced Electronik
55, Mariendalsvej
DK2000, Copenhagen F, Denmark
Tel. 01 194433
Telex (855) 22431

ENGLAND
Paterson/Steadman & Partner Ltd.
The Hub
Emson Close
Saffron Walden, Essex
CB10 1HL, England
Tel. 27067
Telex (851) 81653

J. B. Tratsart Ltd.
Dogmersfield Nr.
Baskingstroke
Hampshire RG27 8SU, England
Tel. 02514 3334
Telex (851) 916196

FINLAND
ITT Multikomponent
Tyopajakatu 5
PL107,00501
Helsinki 50, Finland
Tel. 739100
Telex (857) 121450

FRANCE
Conseilet Promotion
28 Rue de la Procession
92150 Suresnes, France
Tel. 5064275
Telex (842) 614596F

HOLLAND
Manudax-Nederland B.V.
54732G Heeswijk (N.B.)
Meerstraat 7, Holland
Tel. 04139 2901
Telex (844) 50175

HONG KONG
Conmos Products, Ltd.
Haynein Bldg., 11th Floor
1 Tai Yip Street
Keun Tong, Kowloon, Hong Kong
Tel. 3-684572
Telex (780) 85448

INDIA, MALAYSIA, SINGAPORE, THAILAND
Radio & Craft Publications
4794/23 Bharat Ram Road
Daryanganj, New Delhi 2, India
Tel. 277147

ISRAEL
STG International Ltd.
10 Humberman Street
P. O. Box 1276
61012 Tel Aviv, Israel
Tel. 248231
Telex (922) 342229

ITALY
Gruppo Editoriale Jackson S.R.L.
Via Rosellini 12
20124 Milan, Italy
Tel. 68 80951
Telex (843) 315366

JAPAN
Asahi Glass Company, Ltd. Electronic Components Group
1-2 Marunouchi 2-chome
Chiyoda-ku, Tokyo 100, Japan
Tel. (03) 218-5813
Telex (781) TK4616

Overseas Data Service Co. Ltd.
Shugetsu Building No. 12-7
Kita-Aoyama 3-chome
Minato-ku, Tokyo 107, Japan
Tel. (03) 400-7090
Telex (781) J26487

Tokyo International Communications Inc.
Miyajima Bldg.
28 Yoyogi 1-chome,
Shibuya-ku
Tokyo 151, Japan
Tel. 379-2561
Telex (781) 33106

NORWAY
Fagbokservice A.S.
Ekebergn, 130B
Box 94
Bekkelagshogda, Oslo 2, Norway
Tel. (02) 282237

SOUTH AFRICA
Suntronika
Dargene House,
10 Station Street
Braamfontein, Johannesburg
South Africa
Tel. 725-1210
Telex (960) 4-24143

SPAIN
Sagitron
Castello 25, 2, °
Madrid 1, Spain
Tel. 402 6085
Telex (831) 43819

SWEDEN
Fertronic AB
Snormakarvagen 35
Box 56,
16126 Bromma, Sweden
Tel. 08/252610
Telex (854) 11181

SWITZERLAND
W. Stolz AG
Taefernstrasse 15
CH-5404 Baden-Daettwil
Switzerland
Tel. 056 840151
Telex (845) 54070Z

TAIWAN
Helm Engineering & Trading Co.
49 No. 143 Section 4
Hsin Yi Rd.
Taipei, Taiwan, ROC
Tel. 709-1888
Telex (785) 28204

TURKEY
EMPA Elektronik (Mamulleri Pazarlama AS)
Tersane Cad. Kuthan 38/408
Tr-Kara Koy — Istanbul, Turkey
Tel. (11) 496249
Telex 24429

WEST GERMANY
Astronic GmbH
Winzererstrasse 47d
8000 Munich 40,
West Germany
Tel. (089) 309031
Telex (841) 5216187

Hearst
HEARST BUSINESS COMMUNICATIONS, INC./UTP DIVISION
645 Stewart Avenue, Garden City, NY 11530 (516) 222-2500 TWX: 510-222-1673

If you need

IC Master Catalog

you need

Integrated Circuits Magazine.

Not only will Integrated Circuits Magazine update your IC Master Catalog...
...it will provide valuable IC application and selection information in every issue.

SUBSCRIBE TODAY!

Subscription card located inside back cover of Volume I or available from publisher upon request.

Base Number	Source	Device	Page-Line
8287	Fujitsu	MBL8287	1349-73
	Intel	8287	1349-75
		M8287	1344-171
			1346-90
			1347-45
			1349-76
	NEC	uPD8287	1349-78
	Siemens	SAB8287	1349-79
8288	Fujitsu	MBL8288	1349-37
	Intel	8288	1349-39
		M8288	1349-40
	National	DM8288	611-109
	NEC	uPD8288	1349-42
	Siemens	SAB8288	1349-43
8289	Fujitsu	MBL8289	1349-31
	Intel	8289	1349-33
		M8289	1349-34
	Siemens	SAB8289	1349-36
82891	National	INS82891	1353-119
82893	National	INS82893	1353-120
829	Panasonic	AN829	3232-64
		AN829S	3232-65
8290	National	DM8290	609-185
	Raytheon	RC8290	609-187
		RM8290	609-189
8291	Intel	8291	1344-99
		8291A	1345-128
			1346-130
			1349-56
			1353-125
	National	DM8291	607-138
	Raytheon	RC8291	607-140
		RM8291	607-142
8292	Intel	8292	1345-127
			1346-129
			1353-123
8293	Intel	8293	1345-129
			1353-126
8294	Intel	8294	1345-108
			1355-10
	National	INS8294	1345-45
8295	Intel	8295	1353-47
			¶ 263-10
82C06	National	INS82C06	1345-137
82C08	National	MM82C08	636-92
82C12	**OKI**	**MSM82C12**	★4118
82C19	National	MM82C19	589-70
82C37	**Harris**	**82C37A**	★1484
			1346-147
			1349-53
82C43	Fujitsu	MBL82C43	1344-101
	Intersil	**IM82C43I**	★1500
			1345-133
		IM82C43M	★1500
			1345-134
	Toshiba	TMP82C43	1344-106
82C52	**Harris**	**82C52**	★1482
			★1494
			2686-65
			★1482
			★1494
			1349-70
82C53	**OKI**	**MSM82C53**	★4118
82C54	**Harris**	**82C54**	★1482
			★1486
			1349-68
82C55	**Harris**	**82C55A**	★1482
			★1486
			1349-69
	OKI	**MSM82C55**	★4118
82C59	**Harris**	**82C59A**	★1483
			★1486
			1349-61
82C82	**Harris**	**82C82**	★1484
			★1487
			1349-95
82C83	**Harris**	**82C83**	★1484
			1349-88
82C84	**Harris**	**82C84A**	★1484
			★1487
			1349-52
	Harris	82C84B	1349-45
82C86	**Harris**	**82C86**	★1484
			1349-81
82C87	**Harris**	**82C87**	★1485
			1349-74
82C88	**Harris**	**82C88**	★1485
			★1487
			1349-38
82C89	**Harris**	**82C89**	★1485
			★1487
			1349-32
82HM137			
	Intersil	82HM137C	3783-25
		82HM137M	3783-26
82HM141			
	Intersil	82HM141C	3783-10
		82HM141M	3783-11
82HM181			
	Intersil	82HM181C	3783-32
		82HM181M	3783-40
82HM185			
	Intersil	82HM185M	3783-93
82HM191			
	Intersil	82HM191C	3783-99
		82HM191M	3783-105
82HS181			
	Intel	82HS181	3763-48
82HS191			
	Intel	82HS191	3764-123
82HS195			
	Signetics	N82HS195	3765-95
		S82HS195	3765-109
82HS321			
	Intel	82HS321	3765-120
	Signetics	**N82HS321**	★4184
		S82HS321	★4184
82LS05	National	INS82LS05	1345-113
82LS135			
	Signetics	**N82LS135**	★4170
		S82LS135	★4170
82LS16	**Signetics**	**N82LS16**	★4160
			3772-22
		S82LS16	★4160
			3772-42
82LS17	**Signetics**	**N82LS17**	★4160
			3772-21
		S82LS17	★4160
			3772-41
82LS181			
	Signetics	N82LS181	3763-110
		S82LS181	3763-113
82PC08	National	MM82PC08	636-93
			1348-9
			1348-10
82PC12	National	MM82PC12	1348-21
82S09	Signetics	N82S09	3771-96
	Signetics	**S82S09**	★532
			3771-102
82S100	Motorola	MC82S100C	4482-63
		MC82S100M	4482-67
	Signetics	**N82S100**	★4153
			4482-64
		S82S100	★532
			★4153
			4482-68
82S101	Motorola	MC82S101C	4482-61
		MC82S101M	4482-65
	Signetics	**N82S101**	★4153
			4482-62
		S82S101	★532
			★4153
			4482-66
82S102	**Signetics**	**N82S102**	★4155
			4482-43
		S82S102	★532
			★4155
			4482-45
82S103	**Signetics**	**N82S103**	★4155
			4482-44
		S82S103	★532
			★4155
			4482-46
82S104	Signetics	N82S104	4483-5
		N82S104A	4483-1
	Signetics	**S82S104**	★532
			4483-6
		S82S104A	★532
			4483-2
82S105	Signetics	N82S105	4483-7
	Signetics	**N82S105A**	★4157
			4483-3
		S82S105	★532
			(Continued)
82S105	**Signetics**	**S82S105**	**4483-8**
		S82S105A	★532
			★4157
			4483-4
82S115	Signetics	N82S115	3762-13
	Signetics	**S82S115**	★532
			3762-53
82S123	**Signetics**	**82S123A**	★4164
	Signetics	N82S123	3760-46
	Signetics	**N82S123A**	★4164
		S82S123	★532
			3760-58
82S126	**Signetics**	**82S126A**	★4166
	Signetics	N82S126	3760-87
	Signetics	**N82S126A**	★4166
		S82S126	★532
			3760-115
82S129	Signetics	N82S129	3760-90
	Signetics	**N82S129A**	★4166
		S82S129	★532
			3760-117
		S82S129A	★4166
82S130	Signetics	N82S130	3761-35
	Signetics	**N82S130A**	★4168
		S82S130	★532
			3761-64
		S82S130A	★4168
82S131	Signetics	N82S131	3761-39
	Signetics	**S82S131**	★532
			3761-70
82S137	**Signetics**	**N82S137**	★4172
			3762-119
		N82S137B	★4172
			3762-75
		S82S137	★532
			3763-11
		S82S137A	★532
			3763-4
82S141	Signetics	N82S141	3762-14
	Signetics	**S82S141**	★532
			3762-54
82S147	**Signetics**	**N82S147A**	★4174
			3761-114
		S82S147	★532
		S82S147A	★4174
82S150	Signetics	N82S150	4482-49
	Signetics	**S82S150**	★532
			4482-47
82S151	**Signetics**	**N82S151**	★4144
			4482-50
		S82S151	★532
			★4144
			4482-48
82S152	Signetics	N82S152	4482-73
		N82S152A	4482-71
		S82S152	4482-78
		S82S152A	4482-76
82S153	**Signetics**	**N82S153**	★4146
			4482-75
		N82S153A	★4146
			★4146
			4482-72
		S82S153	★532
			★4146
			4482-80
		S82S153A	★532
			★4146
			★4146
			4482-77
82S154	Signetics	N82S154	4483-19
	Signetics	**S82S154**	★532
			4483-17
82S155	Signetics	N82S155	4483-20
	Signetics	**S82S155**	★532
			4483-18
82S156	Signetics	N82S156	4483-15
	Signetics	**S82S156**	★532
			4483-13
82S157	Signetics	N82S157	4483-16
	Signetics	**S82S157**	★532
			4483-14
82S158	Signetics	N82S158	4483-11
	Signetics	**S82S158**	★532
			4483-9
82S159	**Signetics**	**N82S159**	★4148
			4483-12
			(Continued)
82S159	**Signetics**	**S82S159**	★532
			★4148
			4483-10
82S16	Signetics	N82S16	3772-34
	Signetics	**S82S16**	★532
			3772-49
82S167	**Signetics**	**N82S167**	★4151
		S82S167	★4151
82S17	Signetics	N82S17	3772-31
		S82S17	3772-48
82S180	Signetics	N82S180	3763-75
		S82S180	3763-99
82S181	Intel	82S181	3763-54
	Signetics	N82S181	3763-82
	Signetics	**N82S181A**	★4176
			3763-58
		N82S181B	★4176
			3763-41
		S82S181	★532
			3763-102
		S82S181A	★532
			★4176
			3763-96
		S82S181B	★4176
82S183	Signetics	N82S183	3763-72
		S82S183	3763-103
82S185	Signetics	N82S185	3764-66
	Signetics	**N82S185A**	★4178
			3764-31
		N82S185B	★4178
			3764-24
		S82S185	★532
			3764-67
		S82S185A	★532
			★4178
			3764-59
		S82S185B	★4178
82S19	Signetics	N82S19	3771-97
	Signetics	**S82S19**	★532
			3771-101
82S191	Intel	82S191	3765-27
	Signetics	N82S191	3765-40
	Signetics	**N82S191A**	★4180
			3764-46
		S82S191	★532
			3765-42
		S82S191A	★532
			★4180
			3764-60
82S195	**Signetics**	**N82S195**	★4182
		S82S195	★4182
82S21	Signetics	N82S21	627-83
			3771-59
82S210	Signetics	N82S210	3773-128
		S82S210	3774-2
82S212	**Signetics**	**N82S212A**	★4162
			3773-126
		S82S212	★532
			3774-1
		S82S212A	★4162
82S23	Signetics	N82S23	3760-40
	Signetics	**N82S23A**	★4164
		S82S23	★532
			3760-56
		S82S23A	★4164
82S25	Signetics	N82S25	3770-125
		S82S25	3771-24
82S2708			
	Signetics	**S82S2708**	★532
			3763-104
82S30	Signetics	S82S30	629-138
82S31	Signetics	S82S31	629-139
82S313	**Signetics**	**N82S313A**	★4168
		S82S313A	★4168
82S32	Signetics	S82S32	629-140
82S321	Intel	82S321	3765-123
	Signetics	N82S321	3766-19
	Signetics	**S82S321**	★532
82S37	**Signetics**	**S82S37**	★4172
82S41	**Signetics**	**N82S41**	★876
			624-151
82S42	**Signetics**	**N82S42**	★876
			625-48
82S50	**Signetics**	**N82S50**	★876
			612-30

Arranged alphanumerically from left to right.

© IC MASTER 1984

Base Number	Source	Device	Page-Line
82S52	**Signetics**	**N82S52**	★ **876**
			612-107
82S62	**AMD**	**AM82S62C**	★ **1427**
			639-95
		AM82S62M	★ **1427**
			639-96
	Signetics	**N82S62**	★ **876**
			639-105
82S71	**Signetics**	**N82S71**	★ **876**
			631-128
82S82	**Signetics**	**N82S82**	★ **876**
			605-121
82S83	**Signetics**	**N82S83**	★ **876**
			603-16
83	Apex	PA83	3176-2
			3176-104
			3192-26
		PA83A	3187-32
		PA83M	3176-3
			3176-105
			3192-27
	Burr-Brown	ADC83A	2626-33
	MCE	MCE83	3209-47
830	**Datel**	**ADC-830**	★ **2863**
			2627-22
	MicroPwr	MP830	3157-85
	Motorola	**MC830Series**	★ **820**
	National	NSC830	1348-17
		NSC830-1	1348-18
		NSC830-4	1348-19
	SGS	TCA830S	3164-116
			¶ 296-13
	Telefunken	TCA830	3164-122
8300	Motorola	MC8300	631-47
			3788-50
	National	DM8300	631-51
			3789-1
8300201			
	Burr-Brown	**8300201XC**	★ **2853**
8301	Motorola	MC8301	612-76
	National	DM8301	612-80
8303	AMD	DP8303	2677-22
	National	DP8303	2677-31
8304	AMD	DP8304B	635-105
			2677-6
	Motorola	MC8304	603-168
	National	DP8304	2677-7
			1345-73
		DP8304B	2677-32
8307	AMD	DP8307	2677-23
	Motorola	MC8307	2661-121
	National	DP8307	2677-33
8308	AMD	AM8308	3783-67
		DP8308	2677-24
	Analogic	AH8308E	2643-9
		AH8308T	2643-10
		MP8308	2643-13
		MP8308ECL	2643-11
	Motorola	MC8308	625-63
	National	DP8308	2677-34
8309	Motorola	MC8309	627-131
	National	DM8309	627-133
831	MicroPwr	MP831	3157-86
	National	NSC831	1348-11
		NSC831-1	1348-12
		NSC831-4	1348-13
8310	Motorola	MC8310	610-27
	National	DM8310	610-31
		DP8310	2683-113
8311	Motorola	MC8311	613-112
	National	DM8311	613-116
		DP8311	2683-114
8312	Motorola	MC8312	629-127
	National	DM8312	629-129
8314	Motorola	MC8314	625-127
8316	AMD	AM8316EB	3784-22
		AM8316EC	3784-7
	Motorola	MC8316	607-187
	National	DM8316	607-191
	TI	SBP8316C	3784-3
		SBP8316M	3784-4
8318	Analogic	MP8318	2643-14
		MP8318ECL	2643-12
	Motorola	MC8318	639-30
	National	DM8318	639-34
832	MicroPwr	MP832	3157-87
	National	LM832	3164-47
8322	Motorola	MC8322	629-4
	National	DM8322	629-8
8324	Motorola	MC8324	603-52
83256	Fujitsu	MB83256	3787-60
8328	Motorola	MC8328	633-21
			3791-7
833	**Datel**	**ADC-833**	★ **2863**
	MicroPwr	MP833	3157-88
	National	LM833	3207-56
	NEC	uPD833	3166-94
8334	National	DM8334	626-17
834	Analogic	AD/AM-834	2635-49
	Panasonic	**DN834**	★ **3558**
			641-66
8340	National	DP8340	2686-44
8341	National	DP8341	2686-29
8342	National	DP8342	2686-45
8343	National	DP8343	2686-28
835	Analogic	AD/AM-835	2636-8
	Panasonic	**DN835**	★ **3558**
			641-67
	Panasonic	DN835	3234-16
8350	**National**	**DP8350**	★ **1514**
			1345-97
			1352-102
			¶ 260-3
			¶ 261-11
			¶ 262-15
8352	National	DP8352	1345-98
8353	National	DP8353	1345-99
8355	Intel	8355	1344-153
			1347-32
		8355-2	1344-154
			1347-33
	NEC	uPD8355	1344-155
			1347-34
			1347-36
	Toshiba	TMP8355	1347-35
8356	National	DP8356	1346-56
8360	Sanyo	LM8360	3166-97
8361	Sanyo	LM8361	3166-98
8363	Sanyo	LM8363	3166-115
8364	Sanyo	LM8364	3166-116
837	**Panasonic**	**DN837**	★ **3558**
			641-68
8372	Sanyo	LM8372	3167-76
838	**Panasonic**	**DN838**	★ **3558**
			641-69
839	**Panasonic**	**DN839**	★ **3558**
			641-70
8392	**National**	**DP8392**	★ **1514**
			1352-65
			1354-6
8396	Intel	8396	1351-56
84	**AD**	**ADADC84-10**	★ **2839**
			2629-27
		ADADC84-12	★ **2839**
			2631-15
	Apex	PA84	3176-19
			3176-106
			3192-25
		PA84A	3187-31
	Burr-Brown	**ADC84K-10**	★ **2848**
			2629-28
		ADC84K-12	★ **2848**
			2631-16
	Datel	**ADC-84-10**	★ **2862**
			2629-20
		ADC-84-12	★ **2862**
			2631-7
	MCE	MCE84	3212-10
	MicroNet	**MNADC84-10**	★ **3043**
			2629-24
		MNADC84-12	★ **3043**
			2630-48
840	MicroPwr	MP840	3157-89
8400	Intech	A8400	3233-117
	National	**DP8400**	★ **1514**
			2666-4
	TI	DP8400	2666-5
	Zilog	**Z8400H**	★ **1738**
			1348-58
		Z8400L	★ **1738**
			1348-59
8402	Intech	A8402	3233-118
	National	DP8402	637-59
8404	Intech	A8404	3233-119
8408	MMI	DP8408	2680-112
	National	**DP8408**	★ **1514**
			2680-115
			2680-123
8409	MMI	DP8409	2680-117
	National	**DP8409**	★ **1514**
			2680-119
841	MicroPwr	MP841	3157-90
8410	**Zilog**	**Z8410**	★ **1739**
			1348-83
8416	Fujitsu	MB8416	3778-87
		MB8416-25W	3779-1
		MB8416A-12	3778-19
		MB8416A-12L	3778-20
		MB8416A-15	3778-50
		MB8416A-15L	3778-51
	Hitachi	HM8416A-3	3768-62
		HM8416A-4	3768-69
	MicroPwr	MP8416-20	3778-101
		MP8416-25	3779-5
8417	Fujitsu	MB8417	3778-88
	MicroPwr	MP8417-20	3778-102
		MP8417-25	3779-6
8418	Fujitsu	MB8418	3778-89
	MicroPwr	MP8418-20	3778-103
		MP8418-25	3779-7
8420	**Zilog**	**Z8420**	★ **1739**
			1348-90
84240	National	DP84240	2683-115
84244	National	DP84244	2683-116
843	MicroPwr	MP843	3157-91
8430	**Zilog**	**Z8430**	★ **1739**
			1348-70
84300	National	DP84300	2680-55
84312	National	DP84312	2680-52
			1352-1
84322	National	DP84322	2680-53
			1352-2
84332	National	DP84332	2680-54
			1347-46
844	MicroPwr	MP844	3157-92
8440	**Zilog**	**Z8440**	★ **1740**
			1348-104
8441	Zilog	Z8441	1348-105
8442	Zilog	Z8442	1348-106
8449	Zilog	Z8449	1348-107
845	MicroPwr	MP845	3157-93
8460	**National**	**DP8460**	★ **1514**
			2679-40
			2680-91
	National	DP8460	1353-133
8463	National	DP8463	2679-39
8464	**National**	**DP8464**	★ **1514**
			2679-38
	National	DP8464	1354-1
8466	National	DP8466	2679-37
847	**Datel**	**ADC-847A**	★ **2863**
			2628-9
		ADC-847B	★ **2863**
			2625-31
		ADC-847M	★ **2863**
			2625-32
8470	GI	AY3-8470	3169-21
	Zilog	**Z8470**	★ **1740**
			1348-113
			¶ 270-10
8471	Sanyo	LM8471	3167-77
8475	GI	AY3-8475	3169-22
8495	Intech	A8495	3235-34
85	**AD**	**ADADC85-10**	★ **2839**
			2629-29
		ADADC85-12	★ **2839**
			2631-18
		ADDAC85/CBI	★ **2825**
			2650-1
			¶ 279-12
		ADDAC85/CCD	★ **2825**
			2656-40
			¶ 279-12
		ADDAC85C/CBI	★ **2825**
			2650-2
			¶ 279-12
		ADDAC85C/CCD	★ **2825**
			(Continued)
85	**AD**	**ADDAC85C/CCD**	**2656-41**
			¶ 279-12
	Burr-Brown	**ADC85-10**	★ **2848**
			2629-30
		ADC85-12	★ **2848**
			2631-19
		DAC85C-CBI-I	★ **2848**
			2649-50
		DAC85C-CBI-V	★ **2848**
			2652-22
		DAC85C/CCD	★ **2848**
			2657-1
		DAC85LD-CBI-V	★ **2848**
			2652-23
		DAC85Z-CBI-V	★ **2848**
			2652-24
		MPC85	★ **2850**
		SHC85	★ **2849**
			3237-184
		SHC85ET	★ **2849**
			3237-185
	Comark	MC85	1963-7
	Datel	**ADC-85-12**	★ **2862**
			2631-8
		ADC-85C-10	★ **2862**
			2629-21
		ADC-85C-12	★ **2862**
			2631-9
	Datel	DAC-85C-CBI-I	
			2649-38
		DAC-85C-CBI-V	
			2651-49
		DAC-85C-CCD-I	
			2656-37
		DAC-85C-CCD-V	
			2656-42
	HybridSys	**HSADC85B**	★ **2983**
			2631-11
		HSADC85C	★ **2983**
			2631-12
	DDC	DDC-DAC85LD-CBI-I	
			2649-15
		DDC-DAC85LD-CBI-V	
			2651-52
		DDCADC85-10	2629-23
		DDCADC85-12	2631-13
	MicroNet	DA85C-CCD	2657-2
	MicroNet	**DAC85-CBI**	★ **3044**
			2649-52
		DAC85-CCD	★ **3044**
			2657-3
		MNADC85-10	★ **3043**
			2629-25
		MNADC85-12	★ **3043**
			2630-49
	Siemens	SKC-85	1963-18
	Western	SKC-85	1963-20
	Zendex	ZX-85	1963-31
850	**Burr-Brown**	**DAC850-CBI-I**	★ **2848**
			2649-44
		DAC850-CBI-V	★ **2848**
			2651-33
	Panasonic	DN850	631-21
8500	GI	AY3-8500	3173-4
			¶ 304-3
		AY3-8500-1	3173-5
			¶ 304-3
	Intersil	**ICH8500**	★ **3477**
			3203-11
			¶ 281-8
		ICH8500A	★ **3477**
			3203-10
			¶ 281-8
	Motorola	MC8500	2665-2
	SiliconSys	**SSI8500**	★ **4208**
			2665-3
	Zilog	**Z8500**	★ **1751**
			¶ 267-3
85008	National	NMC85008B-9	3774-111
8501	Motorola	MC8501	2666-3
8502	Motorola	MC8502	2666-6
	SiliconSys	**SSI8502**	★ **4208**
			2666-7
	SMC	COM8502	2686-56
8503	Motorola	MC8503	2666-11

¶ Indicates page number in Application Note Directory.
★ Indicates addition data is provided on the page noted.

Base Number	Source	Device	Page-Line
8504	Motorola	MC8504	638-155
			2666-14
8505	CirTech	MA8505	4468-11
	Motorola	MC8505	2680-96
8506	Motorola	MC8506	637-75
			2666-8
8507	Motorola	MC8507	1343-61
			1355-42
851	**Burr-Brown**	**DAC851-CBI-I**	★2848
			2649-45
			2649-48
		DAC851-CBI-V	★2848
			2651-34
	Panasonic	DN851	608-168
8510	CirTech	MA8510	4468-12
	Intersil	**ICH8510I**	★3479
			3156-14
			3175-83
			3176-140
			¶ 295-12
			¶ 296-10
		ICH8510M	★3479
			3156-15
			3175-84
			3176-141
			¶ 295-12
			¶ 296-10
8511	National	DM8511	614-149
8512	National	DM8512	617-41
8515	CirTech	MA8515	4468-13
	Intersil	ICH8515I	3156-12
		ICH8515M	3156-13
8516	DDC	ADH-8516-11	2634-23
		ADH-8516-12	2630-25
8518	DDC	SH-8518	3238-18
852	Panasonic	DN852	612-25
8520	CirTech	MA8520	4468-14
	Intersil	**ICH8520I**	★3479
			3156-16
			3175-68
			3176-142
			¶ 295-12
		ICH8520M	★3479
			3156-17
			3175-69
			3176-143
			¶ 295-12
	Motorola	MC8520	2665-15
	SiliconSys	**SSI8520**	★4208
			2665-16
8523	Sanyo	LM8523	3169-149
8526	**MicroPwr**	**MP8526B**	★3046
			2657-20
		MP8526C	★3046
			2657-22
		MP8526S	★3046
			2657-21
		MP8526T	★3046
			2657-23
8528	DDC	DAC-8528-11	2653-29
		DAC-8528-12	2649-11
853	**Burr-Brown**	**SDM853**	★2849
8530	**AMD**	**AMZ8530**	★1433
			1354-22
	DDC	TH-8530	3238-159
	Intersil	**ICH8530I**	★3479
			3156-18
			3175-64
			3176-144
			¶ 295-12
		ICH8530M	★3479
			3156-19
			3175-65
			3176-145
			¶ 295-12
	Zilog	**Z8530-SCC**	★1751
			1354-24
			¶ 277-16
8531	**Zilog**	**Z8531**	★1751
8536	**Zilog**	**Z8536-CIO**	★1752
			1352-94
			¶ 261-14
			¶ 270-9
		Z8536A-CIO	★1752
			1352-95
			(Continued)

Base Number	Source	Device	Page-Line
8536	**Zilog**	**Z8536A-CIO**	¶ 261-14
			¶ 270-9
854	**Burr-Brown**	**SDM854**	★2849
			3233-42
	Motorola	MC854	2685-7
8540	Tektronix	8540	1817-14
8542	National	DM8542	615-82
8544	National	DM8544	636-141
8546	National	DM8546	632-160
			3789-108
8550	Tektronix	8550	1817-15
8551	National	DM8551	615-127
			¶ 259-5
			¶ 259-6
8552	National	DM8552	611-165
			¶ 259-6
8553	DDC	BUS-8553	2686-40
	National	DM8553	626-143
8554	DDC	BUS-8554	2686-41
	National	DM8554	611-150
8555	DDC	BUS-8555/56	2686-42
	National	DM8555	610-20
8556	National	DM8556	607-177
			¶ 259-4
8557	DDC	BUS-8557	2686-38
8559	DDC	BUS-8559	2686-43
856	**Burr-Brown**	**SDM856**	★2849
			3233-43
		SDM856J	★2849
			3233-44
		SDM856K	★2849
			3233-45
	Datel	**ADC-856C**	★2863
			2629-4
		ADC-856M	★2863
			2629-5
8560	National	DM8560	611-40
8563	National	DM8563	609-88
857	**Burr-Brown**	**SDM857**	★2849
			3233-46
8570	National	DM8570	632-28
			3790-96
8571	Signetics	PCD8571	3771-112
8573	Signetics	PCB8573	1351-109
			1355-7
8575	National	DM8575	4484-38
			¶ 257-13
8576	National	DM8576	4484-39
			¶ 257-13
		DM8576AAA	3756-7
			¶ 257-13
	Signetics	PCF8576	2661-54
8577	Signetics	PCF8577	2661-55
858	**Burr-Brown**	**SDM858**	★2849
			3233-47
	National	NSC858	1348-20
8581	AD	AD8581B	1348-77
		AD8581L	2627-12
	Zilog	**Z8581**	★1752
			1348-63
			1355-8
		Z8581-CGC	★1752
			1352-93
8585	DDC	ADH-8585-10	2635-14
		ADH-8585-12	2631-17
8586	DDC	ADH-8586-10	2635-13
		ADH-8586-12	2630-45
8589	National	DM8589	627-60
			3771-22
8590	National	DM8590	3790-26
	Synertek	8590	1354-56
	Zilog	**Z8590**	★1755
			1354-57
			¶ 260-8
		Z8590-UPC	★1755
			1354-58
			¶ 260-8
8599	National	DM8599	627-68
			3771-3
85S06	National	DM85S06	3760-10
85S07	National	DM85S07	3760-11
85S47	National	DM85S47A	3760-8
85S68	National	DM85S68	627-80
			¶ 273-11
			3770-113

Base Number	Source	Device	Page-Line
86	**AMD**	**iAPX86/10**	★1429
			1283-34
		iAPX86/20	★1429
			1283-35
	DistComp	DCS/86	1811-6
		DCS86/16	1967-16
		DCS86/8	1963-34
	EMM-SESCO	SECS86/05	1967-10
	Intel	SDK-86	1967-11
		iAPX86/10	1349-17
			1285-23
		iAPX86/20	1348-145
			1285-24
		iAPX86/30	1349-2
			1285-25
		iAPX86/50	1285-26
		iSBC-86/05	1967-15
		iSBC-86/12A	1967-14
		iSBC-86/14	1967-20
		iSBC-86/30	1967-21
	Matrox	MBC-86/12A	1967-17
	National	BLC-86/05	1967-22
		BLC-86/1213	1967-12
	PMI	**DAC-86C**	★3567
			2643-26
			2647-44
			2656-36
			¶ 281-2
			¶ 286-7
		DAC-86E	★3567
			2643-21
			2647-43
			2656-33
			¶ 281-2
			¶ 286-7
	Zendex	ZX86	1967-18
8600	Plessey	SP8600A	640-87
		SP8600B	640-88
8601	Motorola	MC8601	630-109
	National	DM8601	630-111
	Synertek	**SYZ8601**	★1696
	Synertek	Z8601	1348-23
			1281-8
		Z8601A	1348-24
			1281-9
	Zilog	**Z8601**	★1753
			1348-36
			¶ 271-3
	Zilog	Z8601	1283-1
	Zilog	**Z8601-12**	★1753
			1283-2
			¶ 271-3
		Z8601L	★1753
			★1753
			1348-37
			¶ 271-3
8602	Motorola	MC8602	631-7
	National	DM8602	631-9
	Plessey	SP8602A	640-73
		SP8602B	640-74
	Synertek	**SYZ8602**	★1696
	Synertek	Z8602	1348-25
			1281-10
		Z8602A	1348-26
			1281-11
	Zilog	Z8602	1348-38
8603	GI	AY3-8603	3173-6
	Synertek	**SYZ8603**	★1696
	Synertek	Z8603	1348-27
			1281-12
		Z8603A	1348-28
			1281-13
	Zilog	**Z8603**	★1753
			1348-39
	Zilog	Z8603	1283-3
8605	GI	AY3-8605	3173-7
	Plessey	SP8605B	640-75
		SP8605M	640-76
8606	GI	AY3-8606	3173-8
	Plessey	SP8606B	640-70
		SP8606M	640-71
8607	GI	AY3-8607	3173-9
	Plessey	SP8607A	640-77
		SP8607B	640-78
861	Siemens	TAA861	3176-38
			3201-46

Base Number	Source	Device	Page-Line
8610	GI	AY3-8610	3173-10
	Plessey	SP8610	600-18
8611	Plessey	SP8611A	600-19
		SP8611B	600-20
	Synertek	**SYZ8611**	★1696
	Synertek	Z8611	1348-29
			1281-14
		Z8611A	1348-30
			1281-15
	Zilog	**Z8611**	★1754
			1348-40
			¶ 264-1
	Zilog	Z8611	1283-4
	Zilog	**Z8611-12**	★1754
			1283-5
			¶ 264-1
8612	**Plessey**	**SP8612B**	★3561
	Zilog	**Z8612**	★1754
			1348-41
	Zilog	Z8612	1283-6
	Zilog	**Z8612-12**	★1754
			1283-7
8613	National	DM8613	614-150
	Plessey	SP8613	640-83
	Zilog	**Z8613**	★1754
			1348-42
	Zilog	Z8613	1283-8
	Zilog	**Z8613-12**	★1754
			1283-9
8614	National	DS8614	641-3
8615	National	DS8615	641-7
8616	National	DS8616	641-9
8617	National	DS8617	641-24
	Plessey	SP8617B	600-21
862	Burr-Brown	DAC862S	2650-20
	Siemens	TAA862	3176-39
8621	National	DS8621	641-21
			3214-69
			3215-80
8622	National	DS8622	641-28
			3214-72
8626	National	DS8626	641-8
			3214-64
8627	National	DS8627	641-4
8628	National	DS8628	640-119
8629	National	DS8629	641-25
			3214-65
	Plessey	SP8629	641-26
			3214-66
8630	Plessey	SP8630A	640-103
		SP8630B	640-104
864	Panasonic	MEL864A	3234-59
8640	National	DS8640	2672-45
	SMOS	8640	3166-151
	TeledyneS	TSC8640B	2653-47
		TSC8640C	2653-48
8641	Intel	8641A	1344-161
			1346-85
	Motorola	DS8641	2675-39
	National	DS8641	2675-45
	TeledyneS	TSC8641B	2651-4
		TSC8641C	2651-5
8643	Plessey	SP8643	3215-69
		SP8643B	640-108
8646	National	DS8646	2663-46
8647	National	DS8647	2663-140
	Plessey	SP8647	3215-70
		SP8647A	640-109
		SP8647B	640-110
8648	National	DS8648	2663-141
865	Siemens	TAA865	3176-40
			3201-47
8650	SMOS	8650	3166-152
8651	SMOS	8651	3166-153
8654	National	DS8654	2680-132
8655	Plessey	SP8655A	641-5
		SP8655B	641-6
8656	National	DS8656	2680-133
8657	Plessey	SP8657A	640-122
		SP8657B	641-1
8658	Plessey	SP8658	641-2
8659	Plessey	SP8659A	640-117
		SP8659B	640-118
8664	National	DS8664	2664-4
8665	National	DS8665	2664-1
	Plessey	SP8665B	640-101

Arranged alphanumerically from left to right.

© IC MASTER 1984

Base Number	Source	Device	Page-Line
8666	National	DS8666	2664-2
8668	Plessey	SP8668B	640-102
8669	National	DS8669	2662-39
8671	**Zilog**	**Z8671**	★ **1754**
			1348-43
			¶ 277-17
	Zilog	Z8671	1283-10
8675	Zilog	Z8675	1348-44
			1283-11
8678	National	DM8678	3755-3
			¶ 317-4
			¶ 317-6
			¶ 317-7
8680	Plessey	SP8680	600-27
		SP8680A	640-111
		SP8680B	640-112
8681	**Synertek**	**SYZ8681**	★ **1696**
	Synertek	Z8681	1348-31
			1281-16
	Zilog	**Z8681**	★ **1755**
			1348-45
	Zilog	Z8681	1283-12
	Zilog	**Z8681-12**	★ **1755**
			1283-13
8682	**Synertek**	**SYZ8682**	★ **1696**
	Synertek	Z8682	1348-32
	Zilog	Z8682	1348-46
8685	Plessey	SP8685	3215-71
		SP8685A	640-113
		SP8685B	640-114
8690	Plessey	SP8690	3215-72
			¶ 302-1
		SP8690A	640-115
			¶ 302-1
		SP8690B	640-116
			¶ 302-1
8692	National	DS8692	2680-134
8693	National	DS8693	2680-135
8694	National	DS8694	2680-136
86C01	**Synertek**	**SYZ86C01**	★ **1696**
	Synertek	Z86C01	1348-33
			1281-17
86C61	**Synertek**	**SYZ86C61**	★ **1696**
	Synertek	Z86C61	1348-34
86LS52	National	DM86LS52	626-159
86LS62	National	DM86LS62	626-160
86S128	National	DM86S128	3755-4
86S64	National	DM86S64	3755-30
87	**AD**	**ADDAC87/CBI**	★ **2826**
			2649-51
	Burr-Brown	**ADC87/MIL**	★ **2853**
			2630-51
		ADC87U	★ **2853**
			2630-52
		DAC87/CBI	★ **2853**
			2652-33
	Datel	ADC-87-10	2629-26
		ADC-87-12	2631-10
	Datel	**DAC-87-CCD-I**	★ **2861**
			★ **2861**
			2656-38
		DAC-87-CCD-V	★ **2861**
			★ **2861**
			2656-43
		DAC-87C-CBI-I	★ **2861**
			★ **2861**
			2649-39
		DAC-87C-CBI-V	★ **2861**
			★ **2861**
			2651-50
	HybridSys	**HSDAC87BI/V**	★ **2986**
			2651-22
		HSDAC87CI/V	★ **2986**
			2651-23
	DDC	DDC-DAC87-CBI-I	
			2649-14
			2651-51
		DDCADC87-10	2629-22
		DDCADC87-12	2631-14
	MicroNet	**MNADC87**	★ **3043**
			2630-50
		MNDAC87	★ **3044**
			2651-54
870	**Burr-Brown**	**DAC870**	★ **2853**
8700	DDC	HMSDC-8700	3237-119
	TeledyneS	TSC8700	2627-43
8701	TeledyneS	TSC8701	2629-52
8702	National	MM8702A-4	3761-5
	TeledyneS	TSC8702	2634-13
8703	TeledyneS	TSC8703	2627-44
8704	TeledyneS	TSC8704	2629-53
8705	TeledyneS	TSC8705	2634-14
8708	National	INS8708	3764-2
871	Siemens	TCA871	3157-22
8720	Plessey	SP8720	640-81
			3215-52
8735	Plessey	SP8735B	640-96
8737	DataGen	8737	1965-12
8740	Plessey	SP8740	3215-57
		SP8740A	640-92
		SP8740B	640-93
8741	Intel	8741A	1344-162
			1346-86
			1347-41
			1354-60
			¶ 261-17
			¶ 269-16
		M8741A	1344-164
	NEC	uPD8741A	1346-88
			1347-43
	Plessey	SP8741	3215-61
		SP8741A	640-94
		SP8741B	640-95
	Signetics	uPD8741A	1344-168
8742	Intel	8742	1344-163
			1354-62
8743	Plessey	SP8743	3215-64
		SP8743B	640-99
		SP8743M	640-100
8744	Intel	8744	1344-173
			1354-64
8748	AMD	AM8748	1343-143
	Intel	8748-8	1343-144
			¶ 261-17
			¶ 269-16
		8748H	1343-145
			¶ 261-17
			¶ 269-16
			1271-33
			¶ 261-17
			¶ 269-16
		M8748	1343-148
	NEC	uPD8748	1344-2
			1277-38
8749	Intel	8749H	1343-146
		8749H-8	1343-147
		M8749H	1273-5
8750	TeledyneS	TSC8750	2637-42
8751	Intel	8751	1344-174
			¶ 274-5
		8751H	1271-34
			¶ 274-5
		M8751H	1344-175
	TeledyneS	TSC8751	2637-37
8755	Intel	8755A	1344-133
			1346-121
			1347-13
		M8755A	1346-122
	NEC	uPD8755A	1344-134
			1346-123
			1347-14
	OKI	MSM8755	1346-124
	Plessey	SP8755A	641-11
		SP8755B	641-12
	Toshiba	TMP8755A	1344-135
8790	Plessey	SP8790	3214-6
			¶ 302-1
		SP8790A	641-49
			¶ 302-1
			3214-2
		SP8790B	641-50
			¶ 302-1
			3214-3
8792	Plessey	SP8792	3215-84
		SP8792A	3215-85
8793	Plessey	SP8793	3215-76
		SP8793A	3215-77
8794	Plessey	SP8794A	641-51
			3214-4
		SP8794B	641-52
			3214-5
8795	Fujitsu	MB8795A	1353-59
87LS181			
	National	**DM87LS181**	★ **4057**
			3763-108
87P50	**National**	**NS87P50**	★ **1524**
			1344-74
	National	NS87P50	1277-18
87S180	**National**	**DM87S180**	★ **4057**
			3763-51
87S181	**National**	**DM87S181**	★ **4057**
			3763-79
		DM87S181A	★ **4057**
			3762-91
87S184	**National**	**DM87S184**	★ **4057**
			3764-33
87S185	**National**	**DM87S185**	★ **4057**
			3764-39
		DM87S185A	★ **4057**
			3764-23
		DM87S185B	★ **4057**
			3764-12
87S188	National	DM87S188	3760-14
87S190	**National**	**DM87S190**	★ **4057**
			3765-19
87S191	**National**	**DM87S191**	★ **4057**
			3765-25
		DM87S191A	★ **4057**
			3764-106
		DM87S191B	★ **4057**
			3764-91
87S195	National	DM87S195A	3765-98
		DM87S195B	3765-94
87S280	**National**	**DM87S280**	★ **4057**
			3763-52
87S281	**National**	**DM87S281**	★ **4057**
			3763-57
87S288	National	DM87S288	3760-15
87S290	**National**	**DM87S290**	★ **4057**
			3765-20
87S291	**National**	**DM87S291**	★ **4057**
			3765-26
		DM87S291A	★ **4057**
			3764-107
		DM87S291B	★ **4057**
			3764-92
87S321	**National**	**DM87S321**	★ **4057**
			3766-5
87S401	National	DM87S401	3757-45
		DM87S401A	3757-53
87S402	National	DM87S402	3757-58
		DM87S402A	3757-62
87S421	**National**	**DM87S421**	★ **4057**
			3766-6
87SR181			
	National	**DM87SR181**	★ **4057**
			3763-36
87SR25	**National**	**DM87SR25**	★ **4057**
			3761-95
87SR474			
	National	**DM87SR474**	★ **4057**
			3761-96
87SR476			
	National	**DM87SR476**	★ **4057**
			3761-97
88	AMD	iAPX88/10	1283-16
		iAPX88/20	1283-17
	Intel	iAPX88/10	1349-113
			1283-20
		iAPX88/20	1349-105
			1283-21
		iAPX88/30	1349-106
		iAPX88/50	1273-7
		iAPX 88/10	1345-31
		iAPX 88/20	1345-32
		iSBC88/25	1963-32
		iSBC88/40	1963-33
	MicroNet	**DAC88**	★ **3044**
			2652-42
	PMI	**DAC-88C**	★ **3567**
			2643-27
			2647-45
		DAC-88E	★ **3567**
			2643-22
			2647-41
	PMI	DMX-88E	2623-95
		DMX-88F	2623-97
		MUX-88E	2623-89
			(Continued)
88	PMI	MUX-88E	¶ 290-5
		MUX-88F	2623-94
			¶ 290-5
	Rockwell	A88XX	1339-106
	Zendex	ZX-88	1963-36
8800	CalDevices	CDI8800	4470-11
	National	DS8800	636-126
8801	MonSys	MSC8801	1815-1
8802	MonSys	MSC8802	1815-2
8803	National	DS8803	2683-121
8804	Mitel	MT8804B	3216-145
8805	National	MH8805	2682-64
8807	National	DS8807	2683-122
8810	National	DS8810	613-171
8811	National	DS8811	613-172
	Plessey	NJ8811	3214-91
8812	National	DS8812	614-65
	Plessey	NJ8812	3214-92
8815	**Signetics**	**N8815**	★ **876**
			623-152
8819	National	DS8819	613-152
8820	National	DS8820	2674-11
			¶ 285-14
			¶ 286-9
			¶ 287-6
		DS8820A	2674-4
			¶ 285-14
			¶ 286-9
			¶ 287-6
	TI	DS8820	2674-5
88201	Fujitsu	MB88201	1338-28
			1257-15
88202	Fujitsu	MB88202	1338-29
			1257-16
88205	Aptek	AMS88205-5NC	
			3219-7
88210	Mitel	MH88210	3219-9
			¶ 298-9
			¶ 298-11
8822	National	DS8822	2672-12
8830	National	DS8830	2670-44
			¶ 285-14
			¶ 286-9
			¶ 287-6
	TI	DS8830	2670-47
88305	Mitel	MH88305	3219-10
			¶ 298-9
			¶ 298-11
8831	National	DS8831	2668-35
			2670-53
			¶ 258-15
			¶ 259-6
			¶ 285-14
	TI	DS8831	2668-36
			2670-54
88315	Mitel	MH88315	3218-48
8832	National	DS8832	2668-28
			2671-2
			¶ 285-14
	TI	DS8832	2668-29
			2670-56
8833	National	DS8833	2676-34
			¶ 285-14
			1345-74
8834	National	DS8834	2676-29
			¶ 285-14
8835	National	DS8835	2676-27
			¶ 285-14
			1345-75
8836	National	DS8836	2672-43
			¶ 285-14
8837	National	DS8837	2672-62
			¶ 285-14
8838	National	DS8838	2675-2
			¶ 285-14
8839	National	DS8839	2676-32
			¶ 285-14
88401	Fujitsu	MB88401	1338-30
			1257-17
8841	Fujitsu	MB8841	1338-18
			1257-18
88411	Fujitsu	MB88411	1338-31
			1257-19
88413	Fujitsu	MB88413	1338-32
			1257-20

¶ Indicates page number in Application Note Directory.
★ Indicates addition data is provided on the page noted.

Base Number	Source	Device	Page-Line
8842	Fujitsu	MB8842	1338-19
			1257-21
88421	Fujitsu	MB88421	1338-33
			1257-22
88423	Fujitsu	MB88423	1338-34
			1257-23
8843	Fujitsu	MB8843	1338-20
			1257-24
8844	Fujitsu	MB8844	1338-21
			1257-25
8845	Fujitsu	MB8845	1338-22
8846	Fujitsu	MB8846	1338-23
8847	Fujitsu	MB8847	1338-24
8848	Fujitsu	MB8848	1338-25
8849	Fujitsu	MB8849	1338-26
88500	Mitel	MH88500	3218-84
88501	Fujitsu	MB88501	1338-35
			1257-26
88503	Fujitsu	MB88503	1338-36
			1257-27
88505	Mitel	MH88505	3218-70
88506	Mitel	MH88506	3218-71
8851	Fujitsu	MB8851	1338-9
			1257-28
		MB8851A	1338-10
			1257-29
		MB8851L	1338-11
			1257-30
88510	Mitel	MH88510	3218-72
8853	Fujitsu	MB8853	1338-12
			1257-31
	National	DM8853	630-139
88535	Fujitsu	MB88535	1338-37
			1257-32
88536	Fujitsu	MB88536	1338-38
			1257-33
8854	Fujitsu	MB8854	1257-34
		MB8854A	1338-13
			1257-36
		MB8854L	1338-14
			1257-37
88541	Fujitsu	MB88541	1338-39
			1257-35
8855	Fujitsu	MB8855	1338-15
8856	National	DS8856	2661-133
			¶ 288-8
8857	Fujitsu	MB8857	1338-16
	National	DS8857	2662-71
			¶ 288-8
8858	Fujitsu	MB8858	1338-17
	National	DS8858	2662-74
			¶ 288-8
8859	National	DS8859	2662-98
8860	GTEMicro	G8860	3218-139
		G8860X	3218-140
	Mitel	MT8860	3218-131
			¶ 298-11
	Plessey	MV8860	3218-134
8861	National	DS8861	2663-32
			¶ 288-8
8862	Mitel	MT8862	3218-132
			¶ 298-11
	Plessey	MV8862	3218-135
8863	Mitel	MT8863	3218-133
			¶ 298-11
	National	DS8863	2663-96
			¶ 288-8
	Plessey	MV8863	3218-136
8864	National	DS8864	2663-136
			¶ 288-8
8865	GTEMicro	G8865X	3216-37
	Mitel	MT8865	3216-18
			¶ 298-9
			¶ 298-11
	Plessey	MV8865	3216-38
8866	Fujitsu	MB8866	1348-133
			1353-96
8867	National	DS8867	2663-130
8868	Fujitsu	MB8868A	2686-82
8869	National	DS8869	2662-99
8870	GTEMicro	G8870	3219-8
	Mitel	MT8870	3219-11
			¶ 298-9
	National	DS8870	2663-53
8871	National	DS8871	2663-97
8872	National	DS8872	2663-131
8873	National	DS8873	2663-137
8874	National	DS8874	2663-138
8875	National	DM8875	605-6
8876	Fujitsu	MB8876	1353-113
		MB8876A	1341-133
			1353-97
			¶ 261-9
8877	Fujitsu	MB8877A	1341-134
			1353-98
			¶ 261-9
	National	DS8877	2663-54
888	National	NSC888	1955-8
	PMI	**DAC-888A**	★**3567**
			2639-44
		DAC-888B	★**3567**
			2641-6
		DAC-888E	★**3567**
			2639-45
		DAC-888F	★**3567**
			2641-7
8880	National	DS8880	2663-77
			¶ 288-7
	Signetics	DS8880	2663-80
8881	National	DS8881	2664-6
	Signetics	8881	2664-7
	Signetics	**N8881**	★ **876**
			621-92
8884	National	DS8884A	2663-78
			¶ 288-7
8885	National	DS8885	2663-72
			¶ 288-7
	Signetics	8885	2663-73
8887	National	DS8887	2663-93
			¶ 288-7
8889	National	DS8889	2663-127
			¶ 288-7
8890	**Signetics**	**N8890**	★ **876**
			607-51
8891	National	DS8891	2663-40
	Signetics	8891	2663-41
	Signetics	**N8891**	★ **876**
			607-52
		S8891	★ **876**
			607-53
8897	National	DS8897	2663-94
8898	National	DM8898	637-98
8899	National	DM8899	637-95
88C120	National	DS88C120	2673-52
88C20	National	DS88C20	2674-12
88C29	National	MM88C29	593-83
			2671-22
88C30	National	MM88C30	593-29
			2670-28
88L12	National	DS88L12	636-131
88LS120			
	National	DS88LS120	2673-50
89	**PMI**	**DAC-89C**	★**3567**
			2643-28
			2647-46
		DAC-89E	★**3567**
			2643-23
			2647-42
	Rockwell	MM89LS	1339-80
	Siemens	S89	640-68
890	Signetics	TBA890	3171-145
8900	GI	AY3-8900	3173-11
		AY3-8900-1	3173-12
	Omnibyte	OB8900	1961-5
8901	Plessey	SP8901	641-42
			3214-93
			3215-89
8906	National	DS8906	3214-114
	Plessey	SP8906	641-29
			3214-94
			3215-90
8907	National	DS8907	3214-115
8908	National	DS8908	3214-116
8910	GI	AY3-8910	3165-185
			3173-16
			1354-47
	GTEMicro	G8910	3216-108
8911	GTEMicro	G8911	3216-45
8912	GI	AY3-8912	3165-186
			3173-17
			1354-48
			(Continued)
8912	GTEMicro	G8912B	3217-86
	Mostek	MK8912	3217-92
8915	GI	AY3-8915	3173-3
	DDC	HSDC-8915	3237-129
8920	DDC	HSDC-8920	3237-134
	National	DS8920	2663-132
8937	DDC	BUS-8937	2685-66
8942	Sanyo	LM8942	641-89
8960	Mitel	MT8960	3216-91
8961	Mitel	MT8961	3216-60
8962	Mitel	MT8962	3216-92
8963	Mitel	MT8963	3216-61
	National	DS8963	2663-98
8964	Mitel	MT8964	3216-93
8965	Mitel	MT8965	3216-62
89700	Mitel	MH89700	3217-59
8972	Sanyo	LM8972	3167-78
8973	National	DS8973	2663-133
8975	National	DS8975	2663-134
89750	Mitel	MH89750	3217-62
8980	National	DS8980	2663-79
			¶ 288-7
8981	Mitel	MT8981	3217-61
			1342-161
8A1200	**Signetics**	**8A1200**	★**4834**
			4463-34
			4466-44
			¶ 254-14
8A1260	**Signetics**	**8A1260**	★ **527**
			★**4844**
			4463-35
			4466-45
			¶ 254-14
8A1542	**Signetics**	**8A1542**	★ **527**
			★**4848**
			4463-36
			4466-46
			¶ 254-14
8A1664	**Signetics**	**8A1664**	★ **527**
			★**4852**
			4463-37
			4466-47
8A1864	**Signetics**	**8A1864**	★ **527**
			★**4853**
			4463-38
			4466-48
8A2176	**Signetics**	**8A2176**	★ **527**
			★**4854**
			4463-39
			4466-49
8L48	**Raytheon**	**CGA8L48**	★ **508**
			★**4822**
			4462-25
			4462-43
8M864	**IDT**	**IDT8M864-120**	★**4000**
			3781-107
		IDT8M864-120C	
			★**4000**
			3781-108
		IDT8M864-150	★**4000**
			3781-113
		IDT8M864-150C	
			★**4000**
			3781-114
		IDT8M864-200	★**4000**
			3781-121
		IDT8M864-200C	
			★**4000**
			3781-122
		IDT8M864-85	★**4000**
			3781-98
8T04	Signetics	S8T04	2661-148
8T05	Signetics	S8T05	2661-134
8T09	Raytheon	RC8T09	613-146
		RM8T09	613-147
	Signetics	**N8T09**	★ **876**
			613-148
	Signetics	N8T09	2668-30
	Signetics	**S8T09**	★ **876**
			613-149
	Signetics	S8T09	2668-31
8T10	**Signetics**	**N8T10**	★ **876**
			615-130
		S8T10	★ **876**
			615-131
8T125	**Signetics**	**N8T125**	★ **876**
			635-29
	Signetics	N8T125	2678-24
	Signetics	**S8T125**	★ **876**
			635-30
	Signetics	S8T125	2678-25
8T126	**Signetics**	**N8T126**	★ **876**
			2676-7
		S8T126	★ **876**
			638-95
	Signetics	S8T126	2676-10
8T127	**Signetics**	**N8T127**	★ **876**
			638-93
	Signetics	N8T127	2676-8
	Signetics	**S8T127**	★ **876**
			638-96
	Signetics	S8T127	2676-11
8T128	**Signetics**	**N8T128**	★ **876**
			638-106
	Signetics	N8T128	2676-19
	Signetics	**S8T128**	★ **876**
			638-109
	Signetics	S8T128	2676-22
8T129	**Signetics**	**N8T129**	★ **876**
			638-107
	Signetics	N8T129	2676-20
	Signetics	**S8T129**	★ **876**
			638-110
	Signetics	S8T129	2676-23
8T13	Motorola	MC8T13	2668-6
	Signetics	**N8T13**	★ **876**
			2668-9
		S8T13	★ **876**
			2668-10
	TI	N8T13	2668-11
8T14	Motorola	MC8T14	2672-18
	Signetics	N8T14	2672-21
8T15	**Signetics**	**N8T15**	★ **876**
			2668-18
8T16	**Signetics**	**N8T16**	★ **876**
			2672-10
		S8T16	★ **876**
8T20	Raytheon	RC8T20	630-92
		RM8T20	630-93
	Signetics	**N8T20**	★ **876**
			630-94
8T22	**Signetics**	**N8T22**	★ **876**
			630-114
8T23	Motorola	MC8T23	2668-1
	Signetics	**N8T23**	★ **876**
			2668-3
	TI	N8T23	2668-4
8T24	Motorola	MC8T24	2672-13
	Signetics	**N8T24**	★ **876**
			2672-15
8T245	**Signetics**	**N8T245**	★ **876**
			635-127
		S8T245	★ **876**
			635-128
8T25	SiliconG	N8T25	2684-49
8T26	AMD	N8T26	1341-8
	Fairchild	uA8T26A	2675-66
		uA8T26AM	2676-1
	Motorola	MC8T26A	638-90
			2676-4
			1341-9
	National	DS8T26A	638-91
			2676-5
			1341-11
		DS8T26AM	638-92
			2676-6
	Signetics	**N8T26A**	★ **876**
			638-94
	Signetics	N8T26A	2676-9
	Signetics	**S8T26A**	★ **876**
			638-97
	TI	N8T26	638-98
		N8T26A	638-99
8T28	AMD	N8T28	638-101
	Fairchild	uA8T28	2676-13
		uA8T28M	2676-14
	Motorola	MC8T28	638-103
			2676-16
			1341-10
	National	DS8T28	638-104
			2676-17
			(Continued)

Arranged alphanumerically from left to right.

© IC MASTER 1984

Base Number	Source	Device	Page-Line
8T28	National	DS8T28	1341-12
		DS8T28M	638-105
			2676-18
	Signetics	**N8T28**	★ **876**
			638-108
	Signetics	N8T28	2676-21
	Signetics	**S8T28**	★ **876**
			638-111
8T31	Signetics	N8T31	638-161
			1347-65
8T32	Signetics	N8T32	638-163
			1347-69
		S8T32	638-170
			1347-75
8T33	Signetics	N8T33	638-164
			1347-70
		S8T33	638-171
			1347-76
8T34	**Signetics**	**N8T34**	★ **876**
			2676-30
8T3404	**Signetics**	**N8T3404**	★ **876**
			626-12
8T35	Signetics	N8T35	638-165
			1347-58
		S8T35	638-172
			1347-62
8T36	Signetics	N8T36	638-166
			1347-59
		S8T36	638-173
			1347-63
8T37	**Signetics**	**N8T37**	★ **876**
			2672-63
8T38	**Signetics**	**N8T38**	★ **876**
			2675-3
8T380	**Signetics**	**N8T380**	★ **876**
			638-9
8T39	Signetics	N8T39	638-167
			1347-54
		S8T39	638-174
8T58	Signetics	N8T58	1347-92
8T80	Signetics	N8T80	614-5
		S8T80	614-6
8T90	Signetics	S8T90	606-127
8T93	Signetics	N8T93	607-103
8T95	Motorola	MC8T95	606-82
			1341-13
	Signetics	**N8T95**	★ **876**
			606-84
	Signetics	N8T95	1341-17
		S8T95	1341-21
8T96	Motorola	MC8T96	607-35
			1341-14
	Signetics	**N8T96**	★ **876**
			607-37
	Signetics	N8T96	1341-18
8T97	Motorola	MC8T97	606-83
			1341-15
	Signetics	**N8T97**	★ **876**
			606-85
	Signetics	N8T97	1341-19
	Signetics	**S8T97**	★ **876**
			606-86
	Signetics	S8T97	1341-22
8T98	Motorola	MC8T98	607-36
			1341-16
	Signetics	**N8T98**	★ **876**
			607-38
	Signetics	N8T98	1341-20
	Signetics	**S8T98**	★ **876**
			607-39
	Signetics	S8T98	1341-23
8TLS803			
	Signetics	**N8TLS803**	★ **876**
8TLS810			
	Signetics	**N8TLS810**	★ **876**
8TS805	**Signetics**	**N8TS805**	★ **876**
			626-83
		S8TS805	★ **876**
			626-84
8TS806	**Signetics**	**N8TS806**	★ **876**
			616-30
		S8TS806	★ **876**
			626-85
8TS807	**Signetics**	**N8TS807**	★ **876**
			626-132
8TS808	**Signetics**	**N8TS808**	★ **876**
			616-31
8X01	Signetics	8X01A	2665-6
		N8X01A	636-148
8X02	Signetics	N8X02	1336-77
			1355-9
	Signetics	**N8X02A**	★ **1653**
			637-53
8X08	Signetics	8X08	3214-137
8X300	Signetics	8X300	1279-41
			¶ 275-8
	Signetics	**N8X300**	★ **1608**
			★ **1652**
			1347-49
		S8X300-1	★ **1608**
			★ **1652**
			1347-51
		S8X300-2	★ **1608**
			★ **1652**
			1347-52
8X300KT100			
	Signetics	8X300KT100SK	
			1961-24
8X305	Signetics	8X305	1279-42
			¶ 276-15
	Signetics	**N8X305**	★ **1610**
			★ **1652**
			1347-50
		S8X305	★ **527**
			★ **1610**
			★ **1652**
			1347-53
8X31	Signetics	N8X31	638-162
			1347-66
8X310	**Signetics**	**N8X310**	★ **1615**
			★ **1652**
			1347-82
		S8X310	★ **527**
			★ **1615**
			★ **1652**
			1347-83
8X32	Signetics	N8X32	638-168
			1347-71
8X320	**Signetics**	**N8X320**	★ **1619**
			★ **1652**
			637-24
			★ **1619**
			★ **1652**
			1347-81
		S8X320	★ **1652**
8X330	**Signetics**	**N8X330**	★ **1623**
			★ **1652**
			1347-57
		S8X330	★ **1652**
8X338	**Signetics**	**N8X338**	★ **1652**
		S8X338	★ **1652**
8X350	**Signetics**	**N8X350**	★ **1627**
			★ **1652**
			3773-124
			★ **1627**
			★ **1652**
			1347-90
		S8X350	★ **527**
			★ **532**
			★ **1627**
			★ **1652**
			3773-125
			★ **527**
			★ **532**
			★ **1627**
			★ **1652**
			1347-91
8X353	**Signetics**	**N8X353**	★ **1629**
			1347-88
		S8X353	★ **1629**
			1347-89
8X355	**Signetics**	**N8X355**	★ **1630**
			1347-84
		S8X355	★ **1630**
			1347-85
8X36	Signetics	N8X36	638-169
			1347-60
8X360	**Signetics**	**N8X360**	★ **1631**
			★ **1652**
			1347-86
		S8X360	★ **527**
			(Continued)
8X360	**Signetics**	**S8X360**	★ **1631**
			★ **1652**
			1347-87
8X371	**Signetics**	**N8X371**	★ **1632**
			★ **1652**
			1347-67
		S8X371	★ **527**
			★ **1632**
			★ **1652**
			1347-68
8X372	**Signetics**	**N8X372**	★ **1635**
			★ **1652**
			1347-72
		S8X372	★ **527**
			★ **1635**
			★ **1652**
			1347-77
8X374	**Signetics**	**N8X374**	★ **1638**
			★ **1652**
			1347-79
		S8X374	★ **527**
			★ **1638**
			★ **1652**
			1347-80
8X376	**Signetics**	**N8X376**	★ **1635**
			★ **1652**
			1347-61
		S8X376	★ **527**
			★ **1635**
			★ **1652**
			1347-64
8X382	**Signetics**	**N8X382**	★ **1642**
			★ **1652**
			1347-73
		S8X382	★ **527**
			★ **1642**
			★ **1652**
			1347-78
8X41	**Signetics**	**N8X41**	★ **1645**
			636-137
	Signetics	N8X41	1352-88
			1354-115
8X42	Signetics	N8X42	1347-74
8X60	**Signetics**	**N8X60**	★ **1647**
			637-9
	Signetics	N8X60	2680-68
			1347-55
	Signetics	**S8X60**	★ **527**
			★ **1647**
			2680-69
			★ **527**
			★ **1647**
			1347-56
9	Apex	PA9	3176-116
	Datel	**SHM-9**	★ **2861**
	Ferranti	ULA9C	4468-24
			4469-34
		ULA9N	4470-37
			4471-9
		ULA9RA	4464-37
			4465-18
		ULA9RB	4468-30
			4468-55
		ULA9RC	4470-17
			4470-43
		ULA9RD	4471-33
			4471-51
	Interdesign	ULA9C	4468-25
			4469-35
		ULA9N	4470-38
			4471-10
		ULA9RA	4464-38
			4465-19
		ULA9RB	4468-31
			4468-56
		ULA9RC	4470-18
			4470-44
		ULA9RD	4471-34
			4471-52
	Supertex	ED9	592-124
90	**Burr-Brown**	**DAC90B**	★ **2848**
			2640-54
		DAC90S	★ **2848**
			2640-16
	Heurikon	MLZ-90	1955-20
	Pro-Log	System 90	4357-1
			(Continued)
90	Quay	90MPS	1957-22
	Wintek	**CAF90**	★ **2062**
		CPL90	★ **2062**
900	AnalogSys	MI900	3234-130
	Cherry	IC900	3208-31
	Miller	MCPU-900	1957-14
	SGS	TCA900	3173-57
			3235-6
			¶ 307-10
	Signetics	**ACE900**	★ **4858**
			4460-7
	Stynetic	TDS900	1959-26
	Unitrode	PIC900	3234-140
	Western	WD/900	1965-34
9000	Fairchild	9000M	617-24
	TI	TMAM9000	1817-17
	Western	WD9000	1347-46
9001	Fairchild	9001C	617-25
		9001M	617-26
9002	National	DM9002C	621-157
9003	National	DM9003C	620-130
9004	National	DM9004C	620-44
	SMC	COM9004	2685-84
9005	National	DM9005C	622-103
9006	National	DM9006C	622-167
	SMC	CRT9006-135	1352-103
			¶ 275-2
		CRT9006-83	1352-104
			¶ 275-2
9007	SMC	CRT9007	1353-27
			¶ 275-2
			¶ 275-9
9008	National	DM9008C	623-11
	Western	CP9008	1347-47
			1287-22
9009	National	DM9009C	619-154
9010	TI	TMAM9010	1817-18
9012	National	DM9012C	621-89
9016	**AMD**	**AM9016C**	★ **3918**
			3769-17
		AM9016D	★ **3918**
			3769-4
		AM9016E	★ **3918**
			3768-101
		AM9016F	★ **3918**
			3782-71
	National	DM9016C	607-48
9021	SMC	CRT9021B	1353-11
			¶ 275-2
	TI	TMAM9021	1817-19
9024	Fairchild	9024C	617-42
		9024M	617-43
9026	SMC	COM9026	1354-10
9041	TI	TMAM9041	1817-20
9044	AMD	AM9044B	3780-112
		AM9044BM	3780-113
		AM9044CM	3780-80
		AM9044D	3780-50
		AM9044DM	3780-51
		AM9044E	3780-30
9064	**AMD**	**AM9064-10**	★ **3919**
			3782-105
		AM9064-12	★ **3919**
			3782-108
		AM9064-15	★ **3919**
			3782-111
9080	AMD	AM9080A	1267-3
		AM9080AC	1345-25
		AM9080AM	1345-26
9085	AMD	AM9085A	1346-94
90L44	AMD	AM90L44B	3780-114
		AM90L44BM	3780-115
		AM90L44C	3780-81
		AM90L44CM	3780-82
		AM90L44D	3780-52
91	Heurikon	MLZ-91A	1955-39
910	Pro-Log	M910A	
		Control Unit	4355-12
	SGS	TCA910	3173-58
			3235-7
			¶ 307-10
91009	Fairchild	91009C	636-129
9101	AMD	AM9101A	3773-95
		AM9101AM	3773-96
		AM9101B	3773-66
		AM9101BM	3773-67
			(Continued)

¶ Indicates page number in Application Note Directory.
★ Indicates addition data is provided on the page noted.

Base Number	Source	Device	Page-Line
9101	AMD	AM9101C	3773-42
		AM9101CM	3773-43
		AM9101D	3773-24
9106	Toshiba	TC9106B	3214-132
9109	Toshiba	TC9109B	3214-133
9111	AMD	AM9111A	3773-97
		AM9111AM	3773-98
		AM9111B	3773-68
		AM9111BM	3773-69
		AM9111C	3773-44
		AM9111CM	3773-45
		AM9111D	3773-25
	Toshiba	TC9111B	3214-134
9112	AMD	AM9112A	3773-90
		AM9112AM	3773-91
		AM9112B	3773-70
		AM9112BM	3773-71
		AM9112C	3773-46
		AM9112CM	3773-47
		AM9112D	3773-26
9114	AMD	AM9114B	3777-16
		AM9114BM	3777-17
		AM9114C	3776-112
		AM9114CM	3776-113
		AM9114E	3776-52
		AM9114EM	3776-53
91160	IntlMicCir	G91160	★4747
			4464-1
9118	TI	TMS9118	★1712
912	OKI	MSL912R	★4118
			2663-112
9121	Toshiba	TC9121	3169-132
9122	AMD	AM9122-25	★3916
			3772-88
		AM9122-35	★3916
			3772-92
		AM9122-35M	★3916
			3772-93
	Toshiba	TC9122	577-77
9124	AMD	AM9124B	3777-18
			¶ 321-18
		AM9124BM	3777-19
			¶ 321-18
		AM9124C	3776-114
			¶ 321-18
		AM9124CM	3776-115
			¶ 321-18
9128	AMD	AM9128	★3917
			3778-70
		AM9128-10	★3917
			3778-11
		AM9128-12M	★3917
			3778-41
		AM9128-15M	★3917
			3778-71
		AM9128-20	★3917
			3778-120
		AM9128-20M	★3917
			3778-121
		AM9128-70	★3917
			3777-122
	GI	R09128B	3787-31
		R09128C	3787-17
		R09128D	3786-115
	TI	TMS9128	★1712
9129	TI	TMS9129	★1712
9130	AMD	AM9130A	3777-44
		AM9130AM	3777-45
		AM9130B	3777-7
		AM9130BM	3777-8
		AM9130C	3777-1
		AM9130CM	3777-2
		AM9130D	3776-99
		AM9130E	3776-81
	Toshiba	TC9130	592-142
9131	Toshiba	TC9131	3167-104
9132	Toshiba	TC9132	3169-68
9133	Toshiba	TC9133	3169-69
9134	Toshiba	TC9134	3169-70
9135	Toshiba	TC9135	592-143
9136	Toshiba	TC9136	3171-56
9137	Toshiba	TC9137	3171-57
9138	Toshiba	TC9138	3169-125
9139	Toshiba	TC9139	3169-126
9140	AMD	AM9140A	3780-129
		AM9140AM	3780-130
			(Continued)

Base Number	Source	Device	Page-Line
9140	AMD	AM9140B	3780-107
		AM9140BM	3780-108
		AM9140C	3780-98
		AM9140CM	3780-99
		AM9140D	3780-68
		AM9140E	3780-45
9143	Toshiba	TC9143	3169-135
9144	Toshiba	TC9144	3169-136
915	OKI	MSL915R	★4118
			2663-113
9150	AMD	AM9150-25	★3921
			3775-75
		AM9150-35	★3921
			3775-84
		AM9150-35M	★3921
			3775-85
		AM9150-45	★3921
			3775-99
		AM9150-45M	★3921
			3775-100
9151	GI	AY5-9151	3217-34
	Thomson-CSF		
		EFB9151	3217-31
9152	AMD	AM9152	1344-169
9153	GI	AY5-9153	3217-35
9154	GI	AY5-9154	3217-36
9158	Thomson-CSF		
		EFB9158	3217-6
916	OKI	MSL916R	2663-114
9160	GI	R09160	3787-14
917	OKI	MSL917R	★4118
			2663-115
9171	GI	AY5-9171	3217-7
91764	IntlMicCir	G91764	★4747
			4464-3
91E51	Thomson-CSF		
		EFB91E51	3217-32
91L01	AMD	AM91L01A	3773-99
		AM91L01AM	3773-100
		AM91L01B	3773-72
		AM91L01BM	3773-73
		AM91L01C	3773-48
		AM91L01CM	3773-49
91L11	AMD	AM91L11A	3773-102
		AM91L11B	3773-74
		AM91L11BM	3773-75
		AM91L11CM	3773-51
91L111	AMD	AM91L111AM	3773-101
		AM91L111C	3773-50
91L12	AMD	AM91L12A	3773-92
		AM91L12AM	3773-93
		AM91L12B	3773-76
		AM91L12BM	3773-77
		AM91L12C	3773-52
		AM91L12CM	3773-53
91L14	AMD	AM91L14B	3777-20
		AM91L14BM	3777-21
		AM91L14C	3776-116
		AM91L14CM	3776-117
		AM91L14E	3776-54
		AM91L14EM	3776-55
91L22	AMD	AM91L22-35	★3916
			3772-94
		AM91L22-45	★3916
			3772-104
		AM91L22-45M	★3916
			3772-105
		AM91L22-60	★3916
			3772-112
91L24	AMD	AM91L24B	3777-22
		AM91L24BM	3777-23
		AM91L24C	3776-118
		AM91L24CM	3776-119
91L30	AMD	AM91L30A	3777-46
		AM91L30AM	3777-47
		AM91L30B	3777-9
		AM91L30BM	3777-10
		AM91L30C	3777-3
		AM91L30CM	3777-4
91L40	AMD	AM91L40A	3780-131
		AM91L40AM	3780-132
		AM91L40B	3780-109
		AM91L40BM	3780-110
		AM91L40C	3780-100
		AM91L40CM	3780-101
92	Heurikon	MLZ-92A	1955-40

Base Number	Source	Device	Page-Line
920	National	TBA920	3171-87
	Plessey	ML920	3169-41
	RCA	CA920A	3171-98
9201	Exar	XR9201	2641-28
9212	SMC	CRT9212	1353-50
			¶ 275-2
92128	AMD	AM92128-20	★3924
			3786-116
		AM92128-25	★3924
			3787-4
		AM92128-30	★3924
			3787-15
		AM92128-45	★3924
			3787-29
		AM92128B	★3924
			3787-30
		AM92128C	★3924
			3787-16
		AM92128D	★3924
			3787-5
9216	SMC	FDC9216	1353-104
			¶ 273-6
	Western	WD9216-00	1353-116
		WD9216-01	1353-117
9217	AMD	AM9217AC	3784-49
		AM9217AM	3784-50
		AM9217BC	3784-23
		AM9217BM	3784-24
9218	AMD	AM9218BC	3784-25
		AM9218BM	3784-26
		AM9218C	3784-8
922	Plessey	ML922	3169-42
92240	IntlMicCir	G92240	★4747
			4464-5
92256	AMD	AM92256-20	★3925
			3787-49
		AM92256-30	★3925
			3787-75
		AM92256-45	★3925
			3787-91
9229	SMC	FDC9229	1353-118
9232	AMD	AM9232BC	3784-129
		AM9232BM	3785-1
		AM9232C	3784-81
9233	AMD	AM9233BC	3785-2
		AM9233BM	3785-3
		AM9233C	3784-82
9240	AMD	AM9240-35	3785-42
9241	Thomson-CSF		
		TEA9241	3172-43
9244	AMD	AM9244B	3780-116
		AM9244BM	3780-117
		AM9244CM	3780-83
		AM9244D	3780-53
		AM9244DM	3780-54
		AM9244E	3780-31
9256	GI	R09256B	3767-45
		R09256CS	3767-42
		R09256D	3767-33
		R09256DS	3767-38
92560	Harris	HM92560-2	★3968
			3775-13
			3782-76
			3782-82
			3782-95
		HM92560-5	★3968
			3782-78
			3782-92
		HM92560-8	★3968
			3782-75
			3782-83
			3782-89
			3782-96
		HM92560-9	★3968
			3782-77
			3782-84
			3782-90
			3782-97
92562	Harris	HM92562	★3968
92570	Harris	HM92570-2	★3968
			3782-79
			3782-85
			3782-91
			3782-98
		HM92570-5	★3968
			3782-88
			(Continued)

Base Number	Source	Device	Page-Line
92570	Harris	HM92570-5	3782-101
		HM92570-8	★3968
			3782-80
			3782-86
			3782-93
			3782-99
		HM92570-9	★3968
			3782-81
			3782-87
			3782-94
			3782-100
926	Plessey	ML926	3169-43
9264	AMD	AM9264-20	★3922
			3785-60
		AM9264B	★3922
			3786-72
		AM9264C	★3922
			3785-126
		AM9264D	★3922
			3785-81
9265	AMD	AM9265-20	★3923
			3785-52
		AM9265B	★3923
			3786-87
		AM9265C	★3923
			3786-20
		AM9265D	★3923
			3785-98
927	Teltone	M927	3219-14
92780	IntlMicCir	G92780	4464-6
92790	IntlMicCir	G92790	★4747
928	Plessey	ML928	3169-44
9280	AMD	AM9280-35	3786-109
929	Plessey	ML929	3169-45
92L44	AMD	AM92L44B	3780-118
		AM92L44BM	3780-119
		AM92L44C	3780-84
		AM92L44CM	3780-85
		AM92L44D	3780-55
93	Heurikon	MLZ-93	1955-41
930	Motorola	MC930Series	★820
		MVME930	★2041
9300	Fairchild	9300C	631-43
			3788-112
		9300M	631-44
			3788-113
	Motorola	MC9300	631-48
			3788-51
	National	DM9300	631-52
			3789-2
	SMOS	SVM9300	3169-94
	Signetics	N9300	631-55
9301	Fairchild	9301C	612-68
		9301M	612-69
	Motorola	MC9301	612-77
	National	DM9301	612-81
	Signetics	N9301	★876
			612-28
9302	Fairchild	9302C	612-70
		9302M	612-71
9304	Fairchild	9304C	603-166
		9304M	603-167
	Motorola	MC9304	603-169
9305	Fairchild	9305C	608-103
		9305M	608-104
9306	National	NMC9306	★4067
			3758-2
9307	Fairchild	9307C	2661-116
		9307M	2661-117
	Motorola	MC9307	2661-122
9308	Fairchild	9308C	625-61
		9308M	625-62
9309	Fairchild	9309C	627-129
		9309M	627-130
	Motorola	MC9309	627-132
	National	DM9309	627-134
	Signetics	N9309	★876
			627-135
		S9309	★528
			627-136
931	Motorola	MVME931	★2041
9310	Fairchild	9310C	610-23
		9310M	610-24
	Motorola	MC9310	610-28
	National	DM9310	610-32
			(Continued)

Arranged alphanumerically from left to right.

© IC MASTER 1984

Base Number	Source	Device	Page-Line
9310	**Signetics**	**N9310**	★ **876**
			610-35
9311	Fairchild	9311C	613-106
		9311M	613-107
	Motorola	MC9311	613-113
	National	DM9311	613-117
9312	Fairchild	9312C	629-125
		9312M	629-126
	Motorola	MC9312	629-128
	National	DM9312	629-130
	Signetics	**N9312**	★ **876**
			629-135
9313	Fairchild	9313C	629-141
		9313M	629-142
9314	Fairchild	9314C	625-125
		9314M	625-126
	Motorola	MC9314	625-128
	Signetics	S9314	625-129
9316	Fairchild	9316C	607-180
		9316M	607-181
	GI	RO3-9316B	3784-30
		RO3-9316C	3784-11
	Motorola	MC9316	607-188
	National	DM9316	607-192
	Signetics	**N9316**	★ **876**
			608-3
9317	Fairchild	9317BC	2661-159
		9317BM	2661-160
		9317CC	2662-22
		9317CM	2662-23
93174	Fairchild	93174C	615-147
9318	Fairchild	9318C	639-27
		9318M	639-28
	Motorola	MC9318	639-31
	National	DM9318	639-35
9319	Fairchild	9319C	610-158
		9319M	610-159
932	**Motorola**	**MVME932**	★ **2044**
9320	Fairchild	9320C	638-82
		9320M	610-160
9321	Fairchild	9321C	612-118
		9321M	612-119
9322	Fairchild	9322C	628-198
		9322M	628-199
	Motorola	MC9322	629-5
	National	DM9322	629-9
	Signetics	**N9322**	★ **876**
			629-14
9324	Fairchild	9324C	603-45
		9324M	603-46
	Motorola	MC9324	603-53
	Signetics	**N9324**	★ **876**
			603-67
932510	Fairchild	932510C	3764-99
932511	Fairchild	932511C	3764-102
9328	Fairchild	9328C	633-19
			3791-12
		9328M	633-20
			3791-13
	Motorola	MC9328	633-22
			3791-8
933	**Motorola**	**MVME933**	★ **2044**
9331	**HybridSys**	**DAC9331-14**	★ **2984**
			2657-31
		DAC9331-16-4	★ **2984**
			2658-49
		DAC9331-16-5	★ **2984**
			2658-23
		DAC9331-16-6	★ **2984**
			2658-13
	MicroPwr	**MP9331-4**	★ **3046**
			2658-50
		MP9331-5	★ **3046**
			2658-24
		MP9331-6	★ **3046**
			2658-14
9334	Fairchild	9334C	626-13
			¶ 259-3
		9334M	626-14
			¶ 259-3
	National	DM9334	626-18
	Signetics	**N9334**	★ **876**
			626-19
	Signetics	S9334	626-20
9338	Fairchild	9338C	626-167
			¶ 258-14
			(Continued)

Base Number	Source	Device	Page-Line
9338	Fairchild	9338M	626-168
			¶ 258-14
	HybridSys	**HS9338-0**	★ **2983**
			2655-49
		HS9338-1	★ **2983**
			2654-39
		HS9338-2	★ **2983**
			2652-17
9340	Fairchild	9340C	605-64
		9340M	605-65
	Thomson-CSF		
		EF9340	1354-70
			¶ 304-15
			¶ 304-16
			¶ 305-3
			¶ 316-5
93407	Fairchild	93407C	626-169
		93407M	626-170
9341	Fairchild	9341C	604-18
		9341M	604-19
	Thomson-CSF		
		EF9341	1354-71
			¶ 304-15
			¶ 304-16
			¶ 305-3
			¶ 316-5
93412	AMD	AM93412	3772-98
		AM93412AC	3772-95
		AM93412AM	3772-106
		AM93412M	3772-113
93415	AMD	AM93415AC	3774-39
		AM93415AM	3774-52
		AM93415C	3774-62
		AM93415M	3774-83
	Fairchild	93415AC	3774-41
		93415C	3774-63
		93415M	3774-77
	Motorola	**MCM93415C**	★ **4046**
			3774-65
		MCM93415M	★ **4046**
			3774-80
93419	Fairchild	93419A	3771-95
		93419C	3771-98
		93419M	3771-100
	Fujitsu	MBM93419	3771-99
9342	Fairchild	9342C	604-74
		9342M	604-75
93422	AMD	AM93422	3772-101
		AM93422AC	3772-96
		AM93422AM	3772-108
		AM93422M	3772-115
	Fairchild	93422AM	3772-89
		93422C	3772-102
		93422M	3772-117
	Motorola	**MCM93422**	★ **4046**
			3772-103
93425	AMD	AM93425AC	3774-40
		AM93425AM	3774-53
		AM93425C	3774-66
		AM93425M	3774-84
	Fairchild	93425AC	3774-42
		93425AM	3774-72
		93425C	3774-67
		93425M	3774-81
	Motorola	**MCM93425**	★ **4046**
			3774-69
9344	Fairchild	9344M	604-119
93452	Fairchild	93452C	3762-80
		93452M	3762-99
93453	Fairchild	93453C	3762-81
		93453M	3762-103
9346	**National**	**NMC9346**	★ **4068**
			3758-23
93460	Fairchild	93460M	3763-61
93475	Fairchild	93475	3775-101
93479	Fairchild	93479	3773-127
9348	Fairchild	9348C	639-129
		9348M	639-130
9349	HybridSys	DAC9349-12	2652-49
		DAC9349-3D	2657-10
935	**Motorola**	**MVME935**	★ **2044**
93500	**IntlMicCir**	**G93500**	★ **4747**
			4464-7
93546	Fairchild	93546M	603-80
9356	**HybridSys**	**DAC9356**	★ **2986**
			2653-6

Base Number	Source	Device	Page-Line
9362	**OKI**	**MSL9362**	★ **4118**
			3169-37
9363	**Motorola**	**μA9363A**	★ **3064**
	OKI	**MSL9363**	★ **4118**
			3169-38
9364	Thomson-CSF		
		EF9364	1352-107
			¶ 305-4
			¶ 316-4
9365	Thomson-CSF		
		EF9365	1353-128
			¶ 266-14
			¶ 303-15
			¶ 305-1
			¶ 323-10
9366	Thomson-CSF		
		EF9366	1353-129
			¶ 266-14
			¶ 305-1
			¶ 323-10
9367	Thomson-CSF		
		EF9367	1353-130
			¶ 266-14
			¶ 303-15
			¶ 305-2
			¶ 323-10
9368	Fairchild	9368C	2661-81
937	Teltone	M937	3219-15
9370	Fairchild	9370C	2661-77
9374	Fairchild	9374C	2662-73
9377	**HybridSys**	**DAC9377-16-4**	★ **2984**
			2655-51
		DAC9377-16-5	★ **2984**
			2654-41
		DAC9377-16-6	★ **2984**
			2658-19
		DAC9377-4D	★ **2984**
			2657-17
	MicroPwr	**MP9377-16**	★ **3046**
			2658-20
		MP9377-16-4	★ **3046**
			2659-14
		MP9377-16-5	★ **3046**
			2658-27
		MP9377-16-6	★ **3046**
			2658-30
9386	Fairchild	9386C	625-23
		9386M	625-24
	Signetics	**N9386**	★ **876**
			625-30
	Signetics	S9386	625-31
93L00	Fairchild	93L00C	3788-48
		93L00M	3788-49
93L28	Fairchild	93L28C	3791-5
		93L28M	3791-6
93L412	AMD	AM93L412	3772-114
		AM93L412AC	3772-107
		AM93L412AM	3772-110
		AM93L412M	3772-119
93L415	AMD	AM93L415C	3774-76
		AM93L415M	3774-96
	Fairchild	93L415	3774-78
		93L415C	3774-79
		93L415M	3774-97
93L421	Fairchild	93L421M	3772-54
93L422	AMD	AM93L422	3772-116
		AM93L422AC	3772-109
		AM93L422AM	3772-111
		AM93L422M	3772-120
	Fairchild	93L422AC	3772-90
		93L422AM	3772-121
		93L422C	3772-118
		93L422M	3772-122
	Motorola	**MCM93L422**	★ **4046**
			3772-91
			3772-97
93L425	AMD	AM93L425M	3774-100
	Fairchild	93L425C	3774-82
		93L425M	3774-101
93S00	Fairchild	93S00C	631-73
			3789-21
		93S00M	631-74
			3789-22
93S10	**AMD**	**AM93S10**	★ **1427**
			610-67
			(Continued)

Base Number	Source	Device	Page-Line
93S10	Fairchild	93S10C	610-70
		93S10M	610-71
93S12	Fairchild	93S12C	629-185
		93S12M	629-186
93S137	Fairchild	93S137C	613-99
		93S137M	613-100
93S16	**AMD**	**AM93S16C**	★ **1427**
			608-35
		AM93S16M	★ **1427**
			608-36
	Fairchild	93S16C	608-39
		93S16M	608-40
93S41	Fairchild	93S41C	604-62
		93S41M	604-63
93S42	Fairchild	93S42C	604-97
		93S42M	604-98
93S43	Fairchild	93S43C	604-160
			¶ 250-3
		93S43M	604-161
			¶ 250-3
93S46	Fairchild	93S46C	603-81
93S47	Fairchild	93S47C	603-82
		93S47M	603-83
93S48	**AMD**	**AM93S48C**	★ **1427**
			639-131
		AM93S48M	★ **1427**
			639-132
93S62	Fairchild	93S62C	639-98
		93S62M	639-99
93Z450	Fairchild	93Z450	3763-37
		93Z450A	3763-28
93Z451	Fairchild	93Z451	3763-39
		93Z451A	3763-32
93Z510	Fairchild	93Z510C	3764-100
		93Z510M	3765-5
93Z511	Fairchild	93Z511C	3764-103
		93Z511M	3765-8
93Z564	Fairchild	93Z564	3766-67
93Z565	Fairchild	93Z565	3766-68
94	**AMD**	**AM94/1530**	★ **2005**
		AM94/1541	★ **2005**
		AM94/2000	★ **2005**
	Quay	99/94FMWS	1815-13
940	ITT	TBA940	3171-78
	SGS	TCA940	3165-54
			¶ 296-14
		TCA940E	3164-170
			¶ 296-14
9400	GI	AY3-9400	3219-50
	TeledyneS	9400	3233-138
			¶ 279-7
			¶ 280-4
9401	AMD	AM9401C	3788-28
		AM9401M	3788-29
	Fairchild	9401C	636-146
			2665-4
			1336-7
		9401M	636-147
			2665-5
			1336-8
	Signetics	**N9401**	★ **1656**
			636-149
	Signetics	N9401	2665-9
			1336-9
	Signetics	**S9401**	★ **1656**
			2665-10
	Signetics	S9401	1336-10
	TeledyneS	9401	3234-1
9402	TeledyneS	9402	3234-2
9403	Fairchild	9403AC	1336-2
		9403AM	1336-3
	Signetics	**N9403**	★ **1660**
			3757-5
	Signetics	N9403	1336-4
	TeledyneS	**TSC9403**	★ **3101**
			2679-45
	TeledyneS	TSC9403	3791-33
	Toshiba	TSC9403	2661-20
9404	**TeledyneS**	**TSC9404**	★ **3101**
			2679-46
	TeledyneS	TSC9404	3791-34
	Toshiba	TSC9404	2661-21
9407	Fairchild	9407C	1336-11
		9407M	1336-12
9410	Fairchild	9410C	627-81
			3770-80
			(Continued)

¶ Indicates page number in Application Note Directory.
★ Indicates addition data is provided on the page noted.

Base Number	Source	Device	Page-Line
9410	Fairchild	9410C	1336-15
		9410M	627-82
			1336-16
	GI	AY3-9410	3219-51
	HybridSys	**HS9410J**	★ **2981**
			3233-35
		HS9410K	★ **2981**
			3233-36
		HS9410S/B	★ **2981**
			3233-37
		HS9410T	★ **2981**
			3233-38
94132	GI	R094132	3766-65
9414	Fairchild	9414STC	636-150
			1336-13
		9414STM	636-151
			1336-14
9423	Fairchild	9423C	3757-42
			1336-5
		9423M	3757-43
			1336-6
9428	Fairchild	9428	2665-32
			1336-91
9432	GI	R09432B	3785-8
		R09432D	3784-62
9433	GI	R09433B	3785-9
		R09433C	3766-51
		R09433D	3784-63
9440	Fairchild	F9440	1285-5
		F9440C	1351-57
		F9440M	1351-58
9442	Fairchild	F9442C	1351-66
			1351-68
9443	Fairchild	F9443	1351-65
9444	Fairchild	F9444	1351-69
9445	**Fairchild**	**F9445**	★ **1468**
			1351-59
	Fairchild	F9445	1285-6
	HiLevel	DP9445EMULYZER	1811-18
944518	Fairchild	F944518	1351-60
944520	Fairchild	F944520	1351-61
944524	Fairchild	F944524	1351-62
9446	Fairchild	F9446	1351-72
9447	**Fairchild**	**F9447**	★ **1468**
			1351-67
9448	Fairchild	F9448	1351-71
9449	**Fairchild**	**F9449**	★ **1469**
			1351-70
9450	**Fairchild**	**F9450**	★ **1469**
9454	Fairchild	F9454	1351-63
9464	GI	R09464AB	3786-74
		R09464AC	3786-3
		R09464AD	3785-53
		R09464B	3786-75
		R09464C	3786-4
		R09464D	3785-54
947	Teltone	M947	3219-16
9470	**Fairchild**	**F9470**	★ **1469**
			1351-64
948	Teltone	M948	3219-17
9480	GI	AY5-9480	3219-63
9491	TeledyneS	9491AM	3236-54
		9491B	3236-55
		9491BM	3236-56
9495	TeledyneS	9495A	3236-176
		9495C	3236-177
		TSC9495	3236-178
9496	TeledyneS	TSC9496	3237-97
95	AMD	AM95/4006	1955-2
		AM95/4010	1955-1
	AMD	**AM95/6120**	★ **2004**
950	ITT	TBA950	3171-79
	National	TBA950-2	3171-88
9500	ITT	TDA9500	3171-81
9502	GI	R03-9502	3784-53
			1339-118
9503	GI	R03-9503	1339-119
	ITT	TDA9503	3171-82
9508	AMI	S9508A	3785-40
	GI	R09508	3785-41
9510	**OKI**	**MSL9510R**	★ **4118**
			2663-116
95100	**IntlMicCir**	**G95100**	★ **4747**
			4464-8
9511	**AMD**	**AM9511**	★ **1440**
			1354-109
			¶ 276-4
		AM9511A	★ **1440**
			640-1
			¶ 276-4
	AMD	AM9511A	1354-110
	AMD	**AM9511A-1**	★ **1440**
			1345-46
			¶ 276-4
		AM9511A-5	★ **1440**
			640-2
			¶ 276-4
	AMD	AM9511A-5	1354-111
	AMD	**AM9511ADM**	★ **1440**
			1345-47
			¶ 276-4
	OKI	**MSL9511R**	★ **4118**
			2663-117
9512	**AMD**	**AM9512**	★ **1441**
			1354-112
			¶ 276-4
9513	**AMD**	**AM9513**	★ **1433**
			★ **1436**
			★ **1442**
			1351-154
			1355-52
	ITT	TDA9513	3171-83
9516	**AMD**	**AM9516**	★ **1433**
	HybridSys	**HS9516-4**	★ **2982**
			2636-21
		HS9516-5	★ **2982**
			2636-27
		HS9516-6	★ **2982**
			2636-39
9517	**AMD**	**AM9517A**	★ **1438**
			★ **1443**
			1351-113
			1355-11
		AM9517A-5	★ **1438**
			★ **1443**
			1346-25
9518	**AMD**	**AM9518**	★ **1433**
			★ **1444**
			1345-107
9519	**AMD**	**AM9519A**	★ **1445**
			1354-32
952	**Datel**	**DAS-952R**	★ **2865**
			3233-50
	Plessey	SL952	3172-56
9520	**AMD**	**AM9520**	★ **1433**
			★ **1446**
			1355-4
955	Siemens	TCA955	3173-61
			3235-8
9551	**AMD**	**AM9551**	★ **1436**
			1346-9
9555	AMD	AM9555ADM	1346-46
9557	**AMD**	**AM9557**	★ **1438**
			1346-26
			1346-154
9559	GI	AY5-9559	3219-64
956	Teltone	M956	3219-18
9562210			
	TI	**TMDS9562210**	★ **1931**
957	Teltone	M957	3219-19
95H00	Fairchild	95H00C	3789-29
96	**AMD**	**AM96/4116A**	★ **2001**
			1965-14
		AM96/4126	★ **2001**
			1965-38
		AM96/5232	★ **2004**
	National	LX96XXD	3236-27
9600	CreMicro	CMS-9600A	1959-28
	Fairchild	9600C	630-136
		9600M	630-137
9601	Fairchild	9601C	630-107
		9601M	630-108
	Motorola	MC9601	630-110
	National	DM9601	630-112
	Raytheon	RF9601	630-113
	Signetics	**N9601**	★ **876**
			630-115
	Signetics	S9601	630-116
9602	Fairchild	9602C	631-3
		9602M	631-4
			(Continued)
9602	Motorola	MC9602	631-8
	National	DM9602	631-10
	Signetics	**N9602**	★ **876**
			631-11
	Signetics	S9602	631-12
9609	CreMicro	CMS-9609	1961-6
96101	Fairchild	96101	614-7
		96101C	2668-32
		96101M	2668-33
96103	Fairchild	96103M	2675-4
96106	Fairchild	96106	2672-46
9612	Fairchild	9612C	2670-29
9614	Fairchild	9614C	2670-30
		9614M	2670-31
	TI	9614C	2670-34
9615	Fairchild	9615C	2673-59
		9615M	2673-60
	TI	9615C	2673-63
9616	Fairchild	9616	2668-24
		9616E	2668-25
		9616M	2668-26
9617	Fairchild	9617C	2672-17
9619	CreMicro	CMS-9619	1961-13
9624	Fairchild	9624C	636-121
		9624M	636-122
9625	Fairchild	9625C	636-107
		9625M	636-108
9634	Fairchild	9634C	2670-61
		9634M	2671-1
9636	Fairchild	9636AC	2668-15
		9636AM	2668-16
	TI	uA9636AC	2668-17
96364	SMC	CRT96364	1354-53
	Thomson-CSF		
		SFF96364	1354-54
96366	Thomson-CSF		
		SFF96366	1354-55
9637	Fairchild	9637AC	2673-53
		9637AM	2673-54
	TI	uA9637AC	2673-57
9638	TI	uA9638C	2671-4
9639	TI	uA9639C	2668-14
9640	Fairchild	9640C	638-120
			2676-55
		9640M	638-121
			2676-48
9641	Fairchild	9641M	638-122
9643	Fairchild	9643	2681-27
9645	Fairchild	9645	2683-38
965	Siemens	TCA965	3239-87
9650	Fairchild	9650	3232-122
	OKI	**MSL9650**	★ **4118**
			3755-24
966	**OKI**	**MSL966**	★ **4118**
96600	**TI**	**SBP96600**	★ **538**
			4469-20
9662	**OKI**	**MSL9662**	★ **4118**
			3783-115
9663	**OKI**	**MSL9663**	★ **4118**
			3783-116
9664	**OKI**	**MSL9664**	★ **4118**
			3783-113
9665	Fairchild	9665	2679-122
			3158-25
	OKI	**MSL9665**	★ **4118**
			3783-114
9666	Fairchild	9666	2679-141
			3158-26
		9666M	2679-142
			3158-27
9667	Fairchild	9667	2679-93
			3158-28
		9667M	2679-94
			3158-29
9668	Fairchild	9668	2679-75
			3158-30
		9668M	2679-76
			3158-31
967	Teltone	M967	3219-3
96700	**TI**	**SBP96700**	★ **538**
			4469-19
968	Kontron	KDS-968	1813-15
9685	**AD**	**AD9685**	★ **3357**
			3159-63
	Plessey	SP9685	3161-26
			¶ 300-8
9687	**AD**	**AD9687**	★ **3357**
			3159-64
	Plessey	SP9687	3161-27
			¶ 300-8
96L02	Fairchild	96L02C	631-5
		96L02M	631-6
96LS02	Fairchild	96LS02C	631-13
		96LS02M	631-14
96LS32	Fairchild	96LS32	2680-100
		96LS32C	2680-101
96LS42	Fairchild	96LS42C	2680-103
		96LS42M	2680-104
96LS488			
	Fairchild	96LS488DC	637-20
			¶ 259-1
			1351-119
			1355-17
		96LS488DM	637-21
			¶ 259-1
			1351-120
			1355-18
96S02	Fairchild	96S02C	631-17
		96S02M	631-18
97	**AMD**	**AM97/000B**	★ **2003**
		AM97/0064	★ **2003**
		AM97/0128	★ **2003**
		AM97/0256	★ **2003**
		AM97/0343	★ **2002**
		AM97/0512	★ **2003**
		AM97/8605	★ **2002**
970	Intech	A970	3233-58
	National	TBA970	3172-121
9706	Fairchild	uA9706C	2638-36
9708	AMD	AM9708	3763-123
	Fairchild	uA9708	3233-3
			1354-99
		uA9708C	2628-41
		uA9708M	2628-42
	TI	SBP9708C	605-23
			1349-134
		SBP9708M	605-24
			1349-135
9709	National	AM9709C	2621-87
971	Siemens	TCA971	3157-23
9710	National	AM9710C	2621-94
9711	National	AM9711C	2621-113
9712	National	AM9712C	2621-120
9716	AMD	AM9716	3765-44
	National	**NMC9716-25**	★ **4069**
			3758-68
		NMC9716-35	★ **4069**
			3758-89
		NMC9716-45	★ **4069**
			3758-103
9754	Signetics	HEF9754V	2661-30
9768	**AD**	**AD9768**	★ **2823**
			★ **2830**
			2638-40
	Plessey	SP9768	2640-4
9770	**Plessey**	**SP9770**	★ **3071**
			2645-27
			2647-40
97C09	National	AM97C09	2621-88
97C10	National	AM97C10C	2621-95
97C11	National	AM97C11C	2621-114
97C12	National	AM97C12C	2621-121
980	Kontron	KOS-980	1813-16
	Pro-Log	M980	
		Control Unit	4355-13
	Teltone	M980	3216-40
981	Teltone	M981	3216-41
9817	National	NMC9817-20	3758-60
		NMC9817-25	3758-75
		NMC9817-35	3758-97
9818	TI	SBP9818C	3783-113
		SBP9818M	3783-114
982	Teltone	M982	3216-42
9864	GI	R09864AB	3786-90
		R09864AC	3786-22
		R09864AD	3785-62
		R09864B	3786-91
		R09864C	3786-23
		R09864D	3785-63
990	National	TBA990	3170-128
	Telefunken	TBA990	3171-7
	TI	FS990/10	1817-16
			(Continued)

Arranged alphanumerically from left to right.

Base Number	Source	Device	Page-Line
	TI	TM990/101	★2055
			¶ 278-7
			¶ 278-13
			¶ 278-15
			¶ 278-16
			¶ 278-17
			¶ 279-1
		TM990/1241	★2055
			¶ 278-7
			¶ 278-13
			¶ 278-15
			¶ 278-16
			¶ 278-17
			¶ 279-1
	TI	TM990/1481	1967-9
			¶ 278-7
			¶ 278-13
			¶ 278-15
			¶ 278-16
			¶ 278-17
			¶ 279-1
	TI	TM990/201	★2055
			¶ 278-7
			¶ 278-13
			¶ 278-15
			¶ 278-16
			¶ 278-17
			¶ 279-1
		TM990/202	★2055
			¶ 278-7
			¶ 278-13
			¶ 278-15
			¶ 278-16
			¶ 278-17
			¶ 279-1
		TM990/203	★2055
			¶ 278-7
			¶ 278-13
			¶ 278-15
			¶ 278-16
			¶ 278-17
			¶ 279-1
		TM990/204	★2055
			¶ 278-7
			¶ 278-13
			¶ 278-15
			¶ 278-16
			¶ 278-17
			¶ 279-1
		TM990/303A	★2055
			¶ 278-7
			¶ 278-13
			¶ 278-15
			¶ 278-16
			¶ 278-17
			¶ 279-1
		TM990/307	★2055
			¶ 278-7
			¶ 278-13
			¶ 278-15
			¶ 278-16
			¶ 278-17
			¶ 279-1
		TM990/308	★2055
			¶ 278-7
			¶ 278-13
			¶ 278-15
			¶ 278-16
			¶ 278-17
			¶ 279-1
		TM990/309	★2055
			¶ 278-7
			¶ 278-13
			¶ 278-15
			¶ 278-16
			¶ 278-17
			(Continued)
990	TI	TM990/309	¶ 279-1
		TM990/310	★2055
			¶ 278-7
			¶ 278-13
			¶ 278-15
			¶ 278-16
			¶ 278-17
			¶ 279-1
		TM990/311	★2055
			¶ 278-7
			¶ 278-13
			¶ 278-15
			¶ 278-16
			¶ 278-17
			¶ 279-1
		TM990/314	★2055
			¶ 278-7
			¶ 278-13
			¶ 278-15
			¶ 278-16
			¶ 278-17
			¶ 279-1
		TM990/315	★2055
			¶ 278-7
			¶ 278-13
			¶ 278-15
			¶ 278-16
			¶ 278-17
			¶ 279-1
		TM990/317	★2055
			¶ 278-7
			¶ 278-13
			¶ 278-15
			¶ 278-16
			¶ 278-17
			¶ 279-1
		TM990/56X	★2055
			¶ 278-7
			¶ 278-13
			¶ 278-15
			¶ 278-16
			¶ 278-17
			¶ 279-1
9900	AMI	S9900	★1453
			1349-119
			¶ 261-2
			¶ 262-13
			¶ 265-6
			¶ 274-12
	AMI	S9900	1285-1
			¶ 261-2
			¶ 262-13
			¶ 265-6
			¶ 274-12
	GI	AY3-9900	3216-100
	TI	SBP9900A	1287-13
		SBP9900AC	1349-122
		SBP9900AE	1349-123
		SBP9900AM	1349-124
		TM9900/100MA	1965-27
		TM9900/101MA	1965-28
		TM9900/102	1965-29
	TI	TMS9900	★1702
			1349-125
			¶ 262-1
			¶ 262-2
			¶ 263-4
			¶ 274-11
			¶ 275-17
			¶ 276-3
	TI	TMS9900	1287-14
			¶ 262-1
			¶ 262-2
			¶ 263-4
			¶ 274-11
			¶ 275-17
			¶ 276-3
	TI	TMS9900-40	★1702
			1349-126
			¶ 262-1
			¶ 262-2
			¶ 263-4
			¶ 274-11
			¶ 275-17
			(Continued)
9900	TI	TMS9900-40	¶ 276-3
	TI	TMS9900-40	1287-15
			¶ 262-1
			¶ 262-2
			¶ 263-4
			¶ 274-11
			¶ 275-17
			¶ 276-3
9901	TI	SBP9901	★ 539
		TMS9901	★1712
			1350-14
9902	AMI	S9902	1349-132
	TI	TMS9902A	★1712
			1349-133
9903	TI	TMS9903	★1712
			1350-17
9904	TI	TIM9904	1349-137
9905	TI	TIM9905	1349-144
9906	OEI	9906	3176-80
			3180-142
			3201-6
	TI	TIM9906	1349-131
9907	TI	TIM9907	1350-8
9908	TI	TIM9908	1350-11
9909	TI	TMS9909	1349-146
991	Siemens	TAA991	3167-149
		TCA991	3157-24
9910	OEI	9910	3155-23
			3174-36
99105	TI	TMS99105A	★1702
			1349-117
	TI	TMS99105A	1287-16
9911	OEI	9911	3155-24
			3174-25
	TI	TMS9911	1349-145
99110	TI	TMS99110A	★1702
			1349-118
	TI	TMS99110A	1287-17
9914	OEI	9914	3176-11
			3176-64
			3180-159
			3203-8
	TI	TMS9914A	★1712
			1349-148
	Western	WD9914	★3111
			1353-124
9916	OEI	9916	3176-78
			3180-156
			3203-7
9918	OEI	9918	3176-12
			3180-155
	TI	TMS9918A	★1712
			1349-138
			1353-18
	Western	WD9918	★3112
			1353-21
9923	TI	TMS9923	1352-86
9927	TI	TMS9927	1349-139
			1353-38
			¶ 262-1
			¶ 263-15
9928	TI	TMS9928A	1350-20
			1353-19
	Western	WD9928	★3112
			1353-22
9929	TI	TMS9929A	1350-21
			1353-20
	Western	WD9929	★3112
			1353-23
9937	TI	TMS9937	★1712
			1349-140
9940	TI	TMS9940E	1349-115
			¶ 263-13
		TMS9940M	1349-116
			¶ 263-13
			1287-18
99531	TI	TMS99531	★1712
			1350-15
99532	TI	TMS99532	★1712
			3217-156
	TI	TMS99532	1349-147
99534	TI	TMS99534	★1712
			3217-157
99541	TI	TMS99541	★1712
			1349-141
9960	TI	SBP9960C	1350-12
		SBP9960M	1350-13
9961	TI	SBP9961C	1350-1
		SBP9961M	1350-2
99610	TI	TMS99610	★1712
9962210			
	TI	TMDS9962210	★1931
9963	OEI	9963	3155-18
			3174-5
9964	TI	SBP9964C	1350-18
		SBP9964M	1350-19
9965	TI	SBP9965C	★ 539
			1350-6
		SBP9965M	★ 539
			1350-7
99650	TI	TMS99650	★1712
			1350-5
9980	AMI	S9980A	1267-13
	SMC	SMC9980	1349-121
			1287-12
	TI	TMS9980A	1349-127
			1287-19
9981	AMI	S9981	1349-120
	TI	TMS9981	1349-128
			1287-20
9989	TI	SBP9989	1283-23
	TI	TBP9989	★ 539
9990	Cybersys	CYKEY9990	1811-3
9995	TI	TM9995	1349-114
	TI	TMS9995	★1702
			1287-21

Arranged alphanumerically from left to right.

PART NUMBER GUIDE

Each IC manufacturer has his own special method of identifying products, usually through a system of logos, device number prefixes and suffixes. This Part Number Guide is arranged alphabetically by manufacturer and describes each company's part number system. JAN nomenclature is also covered.

Manufacturer Device Identification	Part Number: Prefix	Part Number: Suffix	Example

ADVANCED MICRO DEVICES

Functional Group
- **25** MSI
- **26** Computer Interface
- **27** Bipolar Memory
- **28** MOS Memory
- **29** Bipolar Microprocessor
- **90** MOS
- **91** MOS
- **94** MOS
- **92** MOS
- **95** MOS Peripherals
- **79** Telecommunications
- **93** Bipolar Logic Memory
- **80** MOS Microprocessor
- **21** MOS Memory
- **54/74** Same as 25
- **60** Analog, bipolar
- **61** Analog, bipolar
- **66** Analog, bipolar
- **81** MOS and Bipolar Peripherals
- **82** MOS and Bipolar Peripherals

Type
- **L** Low Power
- **S** Schottky
- **LS** Low Power Schottky
- **(Blank)** Standard

Package
- **D** Hermetic DIP
- **P** Molded
- **F** Flat
- **X** Dice
- **L** Leadless chip-carrier

Temperature Range
- **C** Commercial
- **M** Military

Prefix	Device	Suffix
AM25	S 05	D M

Functional Group — AM25
Type — S
Device Number — 05
Package — D
Temperature Range — M

Note: Alternate source devices follow original manufacturer's part number and marking system.

AMERICAN MICROSYSTEMS

AMI.

A Subsidiary of Gould Inc.

(Current)

(Discontinued)

Family
- **S** Standard

Package Type
- **P** Plastic
- **D** Cerdip
- **C** Ceramic
- **L** Leadless Chip Carrier

Pins/Package
- **8**-Plastic
- **14**-Plastic, Ceramic
- **16**-Plastic, Cerdip, Ceramic
- **18**-Plastic, Cerdip, Ceramic
- **22**-Plastic, Cerdip, Ceramic
- **24**-Plastic, Cerdip, Ceramic
- **28**-Plastic, Cerdip, Ceramic
- **40**-Plastic, Cerdip, Ceramic
- **48**-Plastic, Ceramic
- **64**-Plastic, Ceramic
- **20**-Lead Chip Carrier
- **24**-Lead Chip Carrier
- **24**-Lead Slam Chip Carrier
- **28**-Lead Chip Carrier
- **28**-Lead Slam Chip Carrier
- **40**-Lead Chip Carrier
- **44**-Lead Chip Carrier
- **44**-Lead Slam Chip Carrier
- **48**-Lead Chip Carrier
- **68**-Lead Chip Carrier
- **84**-Lead Chip Carrier
- **28**-Lead Plastic Mini-Flat Package
- **44**-Lead Plastic Mini-Flat Package
- **68**-Lead Plastic Mini-Flat Package

Prefix	Device	Suffix
S	68A00	P
	5101L-1	C
	2559A	P

Version — 2559A
Package Type — P

(Note: see pages B.18 — B.28 of AMI's 1982 MOS PRODUCTS CATALOG)
(See new logo in Guide to Logos)

© IC MASTER 1984

Manufacturer Device Identification	Part Number: Prefix	Part Number: Suffix	Example
ANALOG DEVICES	**AD** Analog Devices **HA** Hybrid A/D **HD** Hybrid D/A	**General Information** **A** Second Generation **DI** Dielectrically Isolated **Z** Operation on ±12V **Temperature Range** **A,B,C** Industrial **J,K,L,M** Commercial **S,T,U** Military **Package** **D** Hermetically Sealed Dip, ceramic or metal **E** Leadless chip carrier **F** Ceramic Flatpack **H** Metal can, hermetically sealed **M** Metal can DIP, hermetically sealed — computer labs **N** Plastic DIP **Q** Cerdip **CHIPS** Monolithic chip	**Monolithic and Hybrid ICs** Prefix: AD, Device: 7516, Suffix: AJN General Information Temperature Package **Video Hybrid Products** Prefix: HAS, Device: 1015, Suffix: EMB ECL Package Mil Screening
BURR-BROWN (Current)		**Temperature** **H, J, K, L** 0°C to +70°C **R, S, T** −55°C to +125°C **A, B, C** −25°C to +85°C **Package** **M** Metal **P** Plastic **Q** MIL-883 Screening	Prefix: , Device: 3532, Suffix: AMQ Temperature Range Package MIL-883 Screening
CHERRY SEMICONDUCTOR (Older ICs may be marked with MCC prefix instead of CS prefix.)	**CS** Cherry Semiconductor **D** Diode Flip Chip **N** NPN Flip Chip **P** PNP Flip Chip	**Package** **0** Loose Component **D** Dual-In-Line **P** "Pill," Small Round Package **T** TO-Can **4** 4 Leads **8** 8 Leads **Circuit Style** **B** National Dual Source **S** Signetics Dual Source	Prefix: CS, Device: 122, Suffix: 0D8 Prefix: CS, Device: 555, Suffix: B Prefix: D, Device: 823 Package/Circuit
CIRCUIT TECHNOLOGY			Prefix: CT, Device: 3078, Suffix: A Company ID Device # Modification (If used)
CYBERNETIC MICRO SYSTEMS (CMS may be used instead of logo)	**CY** Chip **CYP** IC programmer **CYB** Development board **CYS** Interface software **Description** **CY232** Parallel/Serial Interface Device **CY250** Multi Chip Controller **CY300** LCD/Console Controller **CY360** Waveform Synthesizer **CY480** Printer Controller **CY500** Stepper Motor Controller **CY512** Stepper Motor Controller **CY600** Data Acquisition Controller **CY750** Programmable Controller	**no suffix** NMOS, Commercial **C** CMOS/ML Military 883B	Prefix: CY, Device: 600, Suffix: C/ML IC Data Acquisition CMOS Military
DATEL	**Family** **ADC** A/D Converters **AM** Amplifiers **DAC** D/A Converters **DAS** Data Acquisition System **FLT** Filters **MV, MX** Multiplexer **SHM** Sample-Hold **VF** Voltage to Freq. Converters **VR** Voltage Reference **VI** Voltage Inverter **TT** Temperature Transducer	**Package — Monolithic** **1** 14 Pin DIP **2** TO-99 **Seal — Hybrid** **G** Epoxy **M** Hermetic **Temperature** **C** 0°C to 70°C **M** −55°C to 125°C **R** −25°C to +85°C	Prefix: AM, Device: 490, Suffix: 2 A Package Selection DAC HZ12B G C Seal Temperature

PART NUMBER GUIDE

Manufacturer Device Identification	Part Number Prefix	Part Number Suffix	Example
EXAR INTEGRATED SYSTEMS	**XR** Exar	**Grade** **C** Commercial **M** Military (Ceramic package and −55°C to 125°C) **( )** The absence of C or M Indicates a Commercial Part with Tighter Specs **Package** **D** Dice **P** Plastic **N** Ceramic	Prefix: XR Device: 567 Suffix: CP Grade Package
FAIRCHILD (Current) FAIRCHILD A Schlumberger Company (Current) (Discontinued) Note: Alternate source devices follow original manufacturer's part number and marking systems.	**F** Fairchild **SH** Hybrid **μA** Linear (Current) FAIRCHILD (Discontinued)	**Package** **D** Ceramic DIP **E** Plastic Can **F** Flat Pack **H** Metal Can **J** Metal Power Package (TO-66) **K** Metal Power Package (TO-3) **P** Plastic DIP **R** Ceramic Mini DIP **S** Ceramic DIP (F6800 Family) **T** Mini DIP **U** Power Package (Molded, TO-220) **W** Plastic TO-92 **Temperature — Check Device Data for Specific Values** **C** 0°C to 70°C/75°C (CMOS −40°C to 85°C) **L** MOS −55°C to 85°C Hybrid −20°C to 85°C **M** −55°C to 125°C	Prefix: μA Device: 741 Suffix: AHM Electrical Class (if used) Package Temperature
FUJITSU (Current) (Discontinued)	**MB** Micro Block **MBM** Micro Block Modified and Industry Standard Numbers	**Performance Variation** **Y** **E** **H** **L** Low Power **Package** **C** Ceramic **M** Molded (Plastic) **Z** Cerdip	Prefix: MB Device: 8116 Suffix: E M Speed or Performance Variation Package (Ordering purposes only) M — Indicates Plastic Package
GENERAL INSTRUMENT	**Designation** **CU** Array **AY** Array **DL** Shift Register Dynamic ≥ 50 Bits **DS** Shift Register Dynamic < 50 Bits **LC** Linear Circuit **LG** Logic Cells **MEN** N and P Channel FETs **MU** Multiplexer **RA** RAM **RO** ROM **SL** Shift Register Static ≥ 50 Bits **SS** Shift Register Static < 50 Bits **ER** Elec. Alterable Non-Volatile Memory **LA** Logic Array **Temperature and Processing** **0** MTOS −55°C to 85°C **1** MTOS 0°C to 70°C **4** N Channel **5** MTNS 0°C to 70°C **6** −55°C to 125°C **7** MTNS **8** Silicon Gate −55°C to 125°C **9** Silicon Gate 0°C to 70°C	**Package Identification (Not Marked on Package)** **01** Dice **12** 8 Lead DIP **14** TO-5 4 Lead **15** TO-78 8 Lead **16** TO-5 8 Lead **17** TO-5 8 Lead High Profile **21** TO-5 10 Lead **22** TO-5 10 Lead Isolated **23** TO-100 10 Lead **29** 24 Lead Plastic DIP **30** 14 Lead Plastic DIP **31** 16 Lead Plastic DIP **32** 24 Lead Plastic DIP **33** 40 Lead Plastic DIP **35** 36 Lead Plastic Flat Pack **51** TO-8 12 Lead Low Profile **55** 16 Lead DIP **60** 10 Lead Flat Pack **61** 14 Lead Flat Pack **62** 16 Lead Flat Pack **63** 20 Lead Flat Pack **64** 24 Lead Flat Pack **65** 40 Lead Flat Pack **66** 36 Lead	Prefix: RO-6 Device: WXYZ Suffix: (XX) Designation Temp. and Processing Description Package Identification

© IC MASTER 1984

Manufacturer Device Identification	Part Number Prefix	Part Number Suffix	Example
GENERAL INSTRUMENT (continued)	**Description — Multiplexers** **WX** Indicates Typical R_{ds}(on) In Hundred Ohms Steps: 01 ≤ 100 ohms 02 ≤ 200 ohms 03 ≤ 300 ohms, etc. **YZ** Total Number of Channels **Custom** Custom Number Assigned **ROM/RAM** **WXYZ** Total Number of Bits **Shift Registers** **W** Indicates the Number of Redundant Configurations: 1 Single 3 Triple 2 Dual 4 Quad, etc. **XYZ** Total No. of Bits per Configuration **Arrays/Linear/Logic** **WXYZ** Arbitrary Number Assigned	**68** 44 Lead Flat Pack **69** 14 Lead DIP **71** 16 Lead DIP **72** 24 Lead DIP .6 MIL Centers **73** 24 Lead DIP .5 MIL Centers **74** 40 Lead DIP .6 MIL Centers **75** 40 Lead DIP 1.05 MIL Centers **76** 28 Lead DIP **77** 18 Lead DIP **79** 24 Lead DIP .6 MIL Centers **80** 14 Lead Ceramic RIP **81** 16 Lead Ceramic DIP	

GTE MICROCIRCUITS

GTE

Microcircuits

Description
- **C** Special
- **G** Standard

Package
- **P** Plastic
- **C** Ceramic
- **D** Cerdip
- **E** Leaderless Chip Carrier
- **X** Dice

Temperature Range
- **None** 0°C to +70°C
- **I** −40°C to +85°C
- **M** −55°C to +125°C (Commercial)
- **B** −55°C to +125°C (MIL-STD-883, Level B)

Prefix	Device	Suffix
G	8860	A P I 2

Description
Version
Package
Temperature Range
Speed/Power Variation

Description
- **C** Special
- **G** Standard

Package
- **P** Plastic
- **C** Ceramic
- **D** Cerdip
- **E** Leaderless Chip Carrier
- **X** Dice

Temperature Range
- **74** −40°C to +85°C
- **54** −55°C to +125°C

Processing
- **B** MIL-STD-883, Level B

Prefix	Device	Suffix
G	74 SC 134	P B

Description
Temperature Range
ISO-CMOS/Process Designation
Package
Processing

HARRIS

Family
- **A** Analog
- **C** Communications
- **D** Digital
- **I** Interface
- **M** Memory

Package
- **1** Dual-In-Line
- **2** TO-5 Type
- **3** Epoxy Package
- **4** Leadless Carriers
- **7** Mini DIP
- **9** Flat Pack
- **0** Chip Form

Temperature
- **1** 0°C to +200°C*
- **2** −55°C to +125°C
- **4** −25°C to +85°C
- **5** 0°C to +75°C
- **6** 100% 25°C Probe (Dice Only)
- **7** Dash-7 High Reliability Commercial Product. 0°C to +75°C.
- **8** Dash-8 Program MIL-STD-883 Class B HA2-2700-8 (Example Only)
- **9** −40°C to +85°C

* Special high temperature testing available on certain product types. Consult factory for availability.

Prefix	Device	Suffix
H A 1	2425	5

Family
Package
Temperature

PART NUMBER GUIDE

Manufacturer Device Identification	Part Number Prefix	Part Number Suffix	Example

HARRIS (continued)

Family
- **A** Analog
- **C** Communications
- **D** Digital
- **I** Interface
- **M** Memory
- **V** Analog, High Voltage

Package
- **1** Dual-In-Line
- **2** TO-5 Type
- **3** Epoxy Package
- **5** LCC Hybrid
- **4** Leadless Carriers
- **7** Mini DIP
- **0** Chip Form

Temperature
- **1** 0°C to +200°C*
- **2** −55°C to +125°C
- **2A** −55°C to +125°C (Temperature Range only - does not imply 883B Processing)
- **3** −200°C to +300°C*
- **4** −25°C to +85°C
- **5** 0°C to +75°C
- **6** 100% 25°C Probe (Dice Only)
- **7** Dash-7 High Reliability Commercial Product. 0°C to +75°C.
- **8** Dash-8 Program MIL-STD-883 Class B HA2-2700-8 (Example Only)
- **9** −40°C to +85°C

* Special high temperature testing available on certain product types. Consult factory for availability.

Prefix	Device	Suffix
H A 7	5135	5

Family
Package
Temperature

Device Number
3, 4, or 5 Digit Number Suffix Indicators:
- **A** Improved Electrical Specification
- **C** Commercial Temperature Range

Device Family
- **LF** Linear FET
- **LM** Linear Monolithic

* The first digit in the device number signifies the operating temperature range. A "1" denotes a Military temperature range device (−55°C to +125°C), A "3" denotes a Commercial temperature range device (0°C to +70°C).

Package
- **D** Side-brazed Ceramic
- **H** TO-5 (TO-99, TO-100, TO-8)
- **J** Mini Cerdip (8-pin)
- **N** Plastic Dual-In-Line Package

Prefix	Device	Suffix
LM	301A	H

Family
Package

Family
- **A** Analog
- **C** Communication
- **D** Digital
- **I** Interface
- **M** Memory

Package
- **0** Chip Form
- **1** Ceramic
- **3** Epoxy
- **4** Leadless Carrier
- **5** Substrate and leadless assembly
- **9** Flatpack

Part Number
- **0xxx** Diode Matrices
- **61xx** Microprocessor
- **63xx** CMOS ROMs
- **64xx** CMOS Interface
- **65xx** CMOS RAMs
- **66xx** CMOS PROMs
- **67xx** CMOS EPROMs
- **76xx** Bipolar PROMs

Temperature
- **2** −55°C to +125°C
- **5** −0°C to +75°C
- **6** 100% 25°C Probe
- **8** Dash-8 Program Mil. Std 883B
- **9** −40°C to +85°C

Version*

CMOS
- **A** 10 Volt version
- **B** High speed — Low power
- **C** Commercial grade
- **Blank** Standard product

Bipolar
- **A** Redesign — Two level metal
- **P** Power Down version
- **R** Latched outputs
- **RP** Lathed outputs with Power Down option

Blank Standard parts

* All version may not be applicable to every product. Check data sheet.

Prefix	Device	Suffix
H M 1	6514	B 2

Family
Package
Part Number
Version*
Temperature

Family
- **B** Board & Systems
- **Z** Documentation

Package
- **0** Systems

Part Number
- **61xxx** Systems

Option
- **61000-1** Basic system with 256 words memory
- **61000-4** Basic system with 1024 words memory & parallel I/O port
- **61001-1** 4096 word CMOS memory
- **61001-2** 2048 word CMOS memory

Prefix	Device	Suffix
H B 0	61000	1

Family
Package
Part Number
Option

PART NUMBER GUIDE

© IC MASTER 1984

Manufacturer Device Identification	Part Number Prefix	Part Number Suffix	Example

HITACHI

Type
- **HA** Analog
- **HD** Digital
- **HM** Memory (RAM)
- **HN** Memory (ROM)

Package
- **P** Plastic

Prefix	Device	Suffix
HM	472114	AP

Description
Model No.
Modification
Package

HUGHES AIRCRAFT

HUGHES

HUGHES AIRCRAFT COMPANY
Solid State Products

Family
- **HCMP** Commercial Microprocessor
- **HCTR** Counter
- **HSSR** Static Shift Register
- **HLCD** Liquid Crystal Driver
- **HLSS** Heart Rate Monitor
- **HMMP** Military Microprocessor
- **HNVM** Non-Volatile Memory

Package
- **D** Ceramic DIP
- **H** Dice
- **L** Leadless Chip Carrier
- **P** Plastic DIP
- **Y** Cerdip

Prefix	Device	Suffix
HNVM	3008	D

Family
Package

HYBRID SYSTEMS

Hybrid Systems CORPORATION

(Discontinued)

Family
- **ADC9** Commercial Analog to Digital Converter
- **DAC3** Digital to Analog Converter
- **DAC9** Commercial Digital to Analog Converter
- **HS3** Second Source Digital to Analog Converter
- **HS5** Second Source Analog to Digital Converter
- **R6** Precision Voltage Reference

Processing
- **C** Commercial Industrial Use
- **B** Per MIL-STD883B, Class B

Resolution
- **8** 8-Bits Binary
- **10** 10 Bits Binary
- **11** 11-Bits Binary
- **12** 12-Bits Binary
- **14** 14-Bits Binary
- **16** 16-Bits Binary
- **18** 18-Bits Binary
- **2D** 2-Decade BCD
- **3D** 3-Decade BCD
- **4D** 4-Decade BCD

Prefix	Device	Suffix
DAC3	31	C-14

Processing
Resolution

ILC DATA DEVICE

DDC
ILC DATA DEVICE CORPORATION

Family
- **ADC** Analog to Digital
- **ADH** Analog to Digital (Hybrid)
- **BUS** Data Bus Device
- **DAC** Digital to Analog
- **DDAC** Deglitched, Digital to Analog
- **DSC** Digital to Synchro
- **HDSC** Hybrid Digital to Synchro or Resolver
- **HDP** Hybrid Data Processor
- **HMSDC** Hybrid Multiplexed Synchro to Digital
- **HSCT** Hybrid Solid State Control Transformer
- **HSDC** Hybrid Synchro to Digital
- **MSDC** Multiplexed Synchro to Digital
- **SBA** Synchro Booster Amplifier
- **SDC** Synchro to Digital
- **SH** Sample and Hold
- **TD** Torque Driver
- **TH** Track and Hold

Converter Resolution
- **-6** 6-Bits
- **-8** 8-Bits
- **-10** 10-Bits
- **-11** 11-Bits
- **-12** 12-Bits
- **-14** 14-Bits
- **-16** 14-Bits

Temperature Ranges
- **-1** Extended Temperature Range
- **-3** 0°C to +70°C

Voltage Range (Synchro Converters Only)
- **-H** 90V at 400 Hz
- **-M** 26V at 400 Hz
- **-L** 11.8V at 400 Hz
- **-6** 90V at 60 Hz

Prefix	Device	Suffix
DAC	SL	1 883B

Family
Temperature
MIL-STD-883 Level B Processing

PART NUMBER GUIDE

Manufacturer Device Identification	Part Number Prefix	Part Number Suffix	Example

INMOS

Type
- 1 Static RAM
- 2 Dynamic RAM
- 3 EEPROM

Size (2^n) K
- 4 = 16K
- 5 = 32K
- 6 = 64K
- etc....

Organization (2^n) Bits
- 0 = x1
- 1 = x2
- 2 = x4
- etc....

Version
- 0 Standard
- I High Speed

Package
- S Ceramic DIP
- W Ceramic Chip Carrier
- P Plastic DIP

Speed
- 45 — 45ns Access Time
- 55 — 55ns Access Time
- 12 — 120ns Access Time
- etc....

Screening
- (Blank) Commercial
- M MIL-883B
- E Extended Temperature

Prefix	Device	Suffix
IMS	1420	S 45 M

Company
Type
Size
Organization
Version
Package
Speed
Screening

INTEL

Description
- M Indicates Military Operating Temperature Range
- I Indicates Industrial Grade
- J Indicates a JAN qualified device, but is for internal identification purposes only. All JAN devices must be ordered by M38510 part number (Example: M38510/42001 BQB), and will be marked in accordance with MIL-M-38510 specifications.

Package Type
- B Hermetic Package, Type B
- C Hermetic Package, Type C
- D Hermetic Package, Type D
- I Crystal Package
- M Metal Can Package
- P Plastic Package
- X Unpackaged Device

Examples:

D2147H1	High Speed 4096x1-Bit Static RAM (35ns, 180/30mA)
C8080A2	8080A Microprocessor with 1.5 s cycle time, hermetic package Type C, commercial temperature range
MD8080A/B	8080A Microprocessor, hermetic package Type D, military temperature range. MIL-STD-883 Level B processing*

* On military devices, B suffix indicates MIL-STD-883 Level B processing.

Prefix	Device	Suffix
M D	2114A	L — 3

Description
Package
Power/Speed/Processing

INTERNATIONAL MICROCIRCUITS

Circuit Technology
- 4 Metal Gate CMOS, Single Metal
- 7 Silicon Gate CMOS, Single Metal
- 9 Silicon Gate CMOS, Double Metal

Revision Level — Serialized
- A First Design

Customer and Job Code — Serialized
- 00 Unassigned

Package Type
- P Plastic
- Q Cerdip
- R Chip Carrier
- S Special
- T No Package (Die)
- U Side Brazed
- X Prototype Part

Temperature Range
- V Special
- W 0°C to +70°C
- X Prototype Part
- Y −25°C to +85°C
- Z −55°C to +125°C

Assurance, Testing
- K Full Functional Test at 25°C
- L Special Test/Screen
- M MIL-STD-883B, 5004
- X Prototype

Prefix	Device	Suffix
G 7	1440	B 26 Q Y L

IMI Prefix
Circuit Technology
Available Logic Cells (3 or 4 Digits)
Revision Level
Customer and Job Code
Package Type
Temperature Range
Assurance, Testing

© IC MASTER 1984

Manufacturer Device Identification	Part Number Prefix	Part Number Suffix	Example

INTERSIL

(Current)

(Discontinued)

(Discontinued except for very small parts)

(Discontinued)

Prefix

- **D** Drivers
- **DG** Drivers (Analog Switches)
- **G** Multi-Channel FET
- **ICL** Linear and Data Acq. Circuits
- **ICM** Watch and Clock Circuit
- **IH** Hybrid/Analog Gate
- **IM** Digital or Memory Circuit

On all Intersil IC Part Numbers. **The Last Three Letters** are Temperature, Package, and Number of Pins, respectively.

Package

- **A** TO-237
- **B** Plastic flat-pack
- **C** TO-220
- **D** Ceramic dual-in-line
- **E** Small TO-8
- **F** Ceramic flat-pack
- **H** TO-66
- **I** 16 pin (.6 x .7 pin spacing) hermetic hybrid dip
- **J** Cerdip dual-in-line
- **K** TO-3
- **L** Leadless, ceramic
- **P** Plastic dual-in-line
- **S** TO-52
- **T** TO-5 type (also TO-78, TO-99, TO-100)
- **U** TO-72 type (also TO-18, TO-71)
- **V** TO-39
- **Z** TO-92
- **/W** Wafer
- **/D** Dice

Number of Pins

A	8	**P**	20
B	10	**Q**	2
C	12	**R**	3
D	14	**S**	4
E	16	**T**	6
F	22	**U**	7
G	24	**V**	8 (0.230″ pin circle, isolated case)
H	42		
I	28	**W**	10 (0.230″ pin circle, isolated case)
J	32		
K	35	**Y**	8 (0.200″ pin circle, case to pin 4)
L	40		
M	48	**Z**	10 (0.230″ pin circle, case to pin 5)
N	18		

Linear and Data Acquisition

Prefix	Device	Suffix
ICL	8038	C C P D

- Intersil Linear Circuit
- Device Chip Type
- Electrical Option
- Temperature Range
  - **M** — −55°C to +125°C
  - **I** — −20°C to + 85°C
  - **C** — 0°C to + 70°C
- Package
- Number of Pins

Hybrids

Prefix	Device	Suffix
DG	126	A L

- Device Family
  - **DG** — Drivers
  - **D** — Drivers
  - **G** — Multi-channel FET
- Device Chip Type
- Temperature Range
  - **A** — −55°C to +125°C
  - **B** — −20°C to + 85°C
  - **C** — 0°C to + 70°C
- Package
  - **A** — Metal Can
  - **K** — Cerdip
  - **L** — Flat Pack
  - **P** — Ceramic

Prefix	Device	Suffix
IH	5043	B M F D

- Intersil Hybrid/Analog Gate
- Device Chip Type
- Electrical Option
- Temperature Range
  - **M** — −55°C to +125°C
  - **C** — 0°C to + 70°C
- Package
- Number of Pins

Watch and Clock

Prefix	Device	Suffix
ICM	7045	A I P I

- Intersil Watch and Clock Circuit
- Device Chip Type
- Electrical Option
- Temperature Range
  - **M** — −55°C to +125°C
  - **I** — −20°C to +70°C
  - **C** — 0°C to + 70°C
- Package
- Number of Pins

Manufacturer Device Identification	Part Number Prefix	Part Number Suffix	Example

JAN NOMENCLATURE

Prefix
- **J** / **JAN** Qualified Device
- **M38510** Military Designation

Device
The "Slash" numbering signifies the specification and specifies the device type. See Military Parts Directory.
Note: The J or JAN prefix is very important. If it is not there it is not a JAN device.

Device Class
- **A** Missiles and Manned Spacecraft
- **B** General Military
- **C** Less Critical Military Applications

Case Outline
- **A** ¼″ x ¼″ Flat Pack, 14-Pin
- **B** ⅛″ x ¼″ Flat Pack, 14-pin
- **C** ¼″ x ¾″ Dual-In-Line, 14-Pin
- **D** ¼″ x ⅜″ Flat Pack, 14-Pin
- **E** ¼″ x ¾″ Dual-In-Line, 16-Pin
- **F** ¼″ x ⅜″ Flat Pack, 16-Pin
- **G** 8-Lead Can
- **H** ¼″ x ¼″ Flat Pack, 10-Lead
- **I** 10-Lead Can
- **J** ½″ x 1¼″ Dual-In-Line, 24-Pin
- **K** ⅜″ x ½″ Flat Pack, 24-Pin
- **L** ⅜″ x ½″ Flat Pack, 24-Pin
- **Z** ¼″ x ⅜″ Flat Pack, 24-Pin

Lead Finish
- **A** Kovar or Alloy 42, with Hot Solder Dip
- **B** Kovar or Alloy 42, with Bright Acid Tin Plate
- **C** Kovar or Alloy 42, with Gold Plate

Prefix	Device	Suffix
JM38510	/XXXXX	B C B

Device Class — B
Case Outline — C
Lead Finish — B

LAMBDA

- **L** Overvoltage Regulator
- **LAS** Regulator
- **LPD** Dual Power Driver
- **PMD** Discrete Transistor
- **PMR** Dual Rectifier
- **PMS** Switching Transistor

Prefix	Device	Suffix
LAS	14	12

Voltage — 12

LINEAR TECHNOLOGY CORPORATION

Description
- **LT** Linear Technology
- **LF, LM** Second Source to NSC
- **OP** Second Source to PMI
- **SG** Second Source to Silicon General

Temperature
- **C** Commercial Range 0°C to −70°C
- **M** Military Range −55°C to +125°C

Package
- **H** TO-5, TO-46 can
- **J8** 8 lead Cerdip
- **J** 14, 16 lead Cerdip
- **K** TO-3 (Steel)
- **N8** 8 lead molded dip
- **N** 14, 16 lead molded dip
- **T** 3, 5 lead molded TO-220..
- **Z** 2, 3 lead molded TO-92

Prefix	Device	Suffix
LT	1001A	C H

Temperature Range — C
Package Type.. — H

MASTER LOGIC

(Most ICs are marked with ML prefix as well as purchaser's marks)

Family
- **ML** CMOS Gate Array
- **MLA** CMOS Custom
- **F** Other

Gate Capacity
- **50** 50 Gates
- **75** 75 Gates
- **100** 100 Gates
- **150** 150 Gates
- **200** 200 Gates
- **350** 350 Gates

Package
- **P** Plastic
- **CD** CerDIP
- **SB** Side Brazed

Pins
By Count

Prefix	Device	Suffix
ML	150	P-24

Family — ML
Gate Capacity — 150
Package — P
Pins — 24

MICRO NETWORKS

MN Micro Networks

Temperature Range
- **(No Suffix)** 0°C to 70°C
- **E** −25°C to 85°C
- **H** −55°C to 125°C
- **B** Processing to MIL-STD-883

Prefix	Device	Suffix
MN	3000	H B

Temperature Range — H
Processing — B

© IC MASTER 1984

Manufacturer Device Identification	Part Number: Prefix	Part Number: Suffix	Example

MICRO POWER SYSTEMS

MP Micro Power

Temperature Range
- **J, K, L** Commercial/Industrial
- **S, T, U** Military

Package
- **D** Ceramic DIP
- **N** Plastic DIP
- **H** TO-100 Type Can

Prefix	Device	Suffix
MP	7520	T D XXXX

Level of Performance — T
Package — D
Special Processing — XXXX

MITEL SEMICONDUCTOR

Family
- **MD** Digital
- **MDXXHCT** Digital Product Family High Speed ISO-CMOS
- **MDXXSC** Super CMOS Digital Product Family
- **MH** Hybrid
- **ML** Linear
- **MT** Telecommunications

Package Type
- **C** Ceramic Dip
- **E** Plastic Dip
- **H** Dice
- **Y** Leadless Ceramic Chip Carrier

Prefix	Device	Suffix
MT	8804	A E

Electrical Specification — A
Package Type — E

MITSUBISHI

M Mitsubishi Integrated Circuit

Temperature Range
- **5** Industrial/Commercial
- **9** High Reliability

Series (Original Products)
- **0** CMOS
- **1** Linear Circuit
- **3** TTL
- **10-19** Linear Circuit
- **32-33** TTL
- **41-47** TTL
- **84** CMOS
- **85, 86** PMOS
- **87** NMOS
- **88** PMOS
- **89** CMOS
- **9** DTL
- **S0-S2** Schottky TTL

Series (Alternate Source)
- **K** Mostek MK Series
- **L** Intel Series
- **T** TI TMS Series
- **G** General Instrument
- **C** Motorola MC Series
- **W** Western Digital Series

Package Style
- **K** Glass-Sealed Ceramic
- **P** Molded Plastic
- **S** Metal-Sealed Ceramic

Package Outline
- **1** DIL Without Fin
- **2** Flat Without Fin
- **4** DIL Without Fin (Improved)
- **4B** Shrink DIL Without Fin
- **10** DIL Without Fin and With Quartz Lid

Prefix	Device	Suffix
M5	89 81	S-45

Temperature Range — 5
Original Product Series — 89
Circuit Function — 81
Package — S
Electrical Characteristic (1 or 2 digits) — 45

Second Source

M5	K 4164	P

Series Designation — K
Circuit Function of Original Source type name — 4164
Package — P

MONOLITHIC MEMORIES

PAL/HAL — Family
- **PAL** Programmable Array Logic
- **HAL** Hard Array Logic

Output Type
- **H** Active High
- **L** Active Low
- **C** Complementry
- **R** Registered
- **X** Exclusive or Registered
- **A** Arithmetic Registered

Temperature Range
- **C** Commercial
- **M** Military

Package Type
- **J** Ceramic Dual-In-Line
- **N** Plastic Dual-In-Line

Screening Level
- **883B** MIL-STD-883, Method 5004 and 5005, Level B
- **883C** MIL-STD-883, Method 5004 and Level C

Prefix	Device	Suffix
PAL	14 L 4 M J	883B

Family — PAL
Number of Array Inputs — 14
Output Type — L
Number of Outputs — 4
Temperature Range — M
Package Type — J
HI-REL Screening Level — 883B

PART NUMBER GUIDE

Manufacturer Device Identification	Part Number: Prefix	Part Number: Suffix	Example
MONOLITHIC MEMORIES (continued)	**Octal Interface** **Temperature Range** 74 Commercial 54 Military **Family** S Schottky LS Low Power Schottky	**Package Type** J Ceramic Dual-In-Line (600 Mil Wide) JS Ceramic Dual-In-Line (300 Mil Wide) N Plastic Dual-In-Line (600 Mil Wide) NS Plastic Dual-In-Line (300 Mil Wide) D Side Brazed Ceramic Dual-In-Line F Flat Pack L Leadless T Inverted "D" Package **Screening Level** See previous page	Prefix Device Suffix SN 54 LS 373 J 883B Standard Prefix Temperature Range Family Package Type HI-REL Screening Level
	PROMs-ROMs Character Generator-Logic **Temperature Range** 6 Commercial 5 Military **Product** 0 Character Generator O.C. 1 Character Generator T.S. 2 Read Only Memory (ROM) 3 Programmable Read Only Memory (PROM) 7 LSI Logic Product	**Family** -1 Schottky Process (ROMS/PROMS) -2 Improved Performance Over -1 **Package Type** See Octal Interface **Screening Level** See previous page	Prefix Device Suffix 5 3 41-1 J 883B Temperature Range Product Family Package Type HI-REL Screening Level
	High Performance PROMs **Temperature Range** 6 Commercial 5 Military **Product** 3 Programmable Read Only Memory (PROM) **Family** S Schottky LS Low Power Schottky RA Registered **Memory Size** 1 1024 Bit 2 2048 Bit 4 4096 Bit 8 8192 Bit 16 16384 Bit	**No. of Outputs** 4 4 Bit 8 8 Bit **Output/Pin Out Designator** 0 Open Collector 1 Three State **Performance** None Standard A Enhanced **Package Type** See Octal Interface **Screening Level** See previous page	Prefix Device Suffix 5 3 S 24 0 A J 883B Temperature Range Product Family Memory Size Number of Outputs Output/Pin Out Designation Performance Package HI-REL Screening Level
MOSTEK UNITED TECHNOLOGIES MOSTEK	MK Mostek	**Package** E Ceramic Leadless Chip Carrier J CER-DIP K Tin Side-Brazed Ceramic DIP N Epoxy DIP (Plastic) P Gold Side-Brazed Ceramic DIP T Ceramic DIP with Transparent Lid	Prefix Device Suffix MK 4116 P Package
MOTOROLA (ICs may not have the circle on the marking) Some second source ICs follow the original marking system.	**Description** MC Packaged Integrated Circuits MCC Unencapsulated Integrated Circuit Chips MCCF Flip-Chip Linear Integrated Circuits MCM Integrated Circuit Memories LM Pin-for-Pin Equivalent to Linear Integrated Circuits Made by National Semiconductor MMS Memory Systems	**Package** F Flat Ceramic Package G Metal Can Package (TO-5 Types) K Metal Power Package (TO-3 Types) L Ceramic Dual-In-Line Case P Plastic Package PQ ICs Packaged In Staggered-Lead Plastic DIP Packages R Metal Power Packages (TO-66 Types) T Plastic Package (TO-220 Type) U Ceramic Package SOIC package (small outline IC package), Dual-In-Line plastic in 8, 14 and 16 leads SOT package (small outline, transistor package), such as SOT 23, etc. Leadless Ceramic Chip Carriers Leaded Plastic Chip Carriers (to be introduced in 1st Qtr. of '82) Now (new): A ceramic package with a lead count, up to 68 leads or more for direct socketing with boards	Prefix Device Suffix MC 14510 L Description Package

© IC MASTER 1984

Manufacturer Device Identification	Part Number Prefix	Part Number Suffix	Example

NATIONAL SEMICONDUCTOR

Family

- **ADC** Analog — Digital Converter
- **AEE** Microcomputer Product
- **AF** Active Filter
- **AH** Analog Switch (Hybrid)
- **ALS** Advance Low Power Schottky
- **AM** Analog Switch (Monolithic)
- **BLC** Board Level Computer
- **BLX** Board Level Expansion
- **CD** CMOS (4000 Series Only)
- **CIM** CMOS Microprocessor Board
- **COP** Family of Microcontrollers
- **DAC** Digital — Analog Converter
- **DH** Digital (Hybrid)
- **DM** Digital (Monolithic)
- **DP** Interface (Microprocessor)
- **DS** Interface
- **FOR** Fiber Optics Receiver
- **FOT** Fiber Optics Transmitter
- **HC** High Speed CMOS
- **HS** Hybrid
- **IDM** Microprocessor (2901)
- **IMP** Microprocessor (IMP)
- **INS** Microprocessor (4004/8080A)
- **IPC** Microprocessor (PACE)
- **ISP** Microprocessor (SC/MP)
- **JM** MIL-M38510
- **LF** Linear (BI-FET)
- **LF** Linear (BI-FET II)
- **LH** Linear (Hybrid)
- **LM** Linear (Monolithic)
- **LP** Linear Low Power
- **MA** Module Macrocomponents (Hybrid)
- **MF** Monolithic Filter
- **MH** MOS (Hybrid)
- **MM** MOS (Monolithic)
- **NH** Hybrid (Obsolete)
- **NMC** MOS Memory
- **NSA** LED — Numeric Arrays
- **NSB** LED Numerics (Quad/Quint)
- **NSC** **LED** — Dice (or Chip)
- **NSC** Microprocessor 1600, 800)
- **NSL** LED — Lamp
- **NSL** Opto
- **NSM** LED — Integrated Display Modules
- **NSN** LED — Numerics (Dual)
- **NSW** LED — Watch Die Set PNP, NPN, 2N
- **RA** Resistor Array
- **RMC** Rack Mount Computer
- **SD** Special Digital
- **SF** Special FET
- **SFW** Software
- **SH** Special Hybrid
- **SK** Special Kit
- **SL** Special Linear
- **SM** Special MOS
- **SN** Digital (2nd Source)
- **SPM** Development Systems
- **SPX** Development Systems
- **SZ** Special Transducer
- **TBA** Linear (2nd Source)
- **TDA** Linear
- **TP** Telecom Products
- **TRC** Tone Receiver Card

Package Type

- **D** Glass/Metal DIP
- **F** Glass/Metal Flat Pack (¼" x ¼")
- **F-00, F-01, F-06, F-07** Glass/Metal Flat Pack With Standard Leadform
- **G** 12 Lead TO-8 M/C
- **H** Multi-Lead M/C
- **H-05** 4 Lead M/C (TO-5)
- **H-46** 4 Lead M/C (TO-46)
- **J** Lo-Temp Ceramic DIP (Sometimes referred to as the "Frit-Seal" Package).
- **J-8** 8 Lead Ceramic DIP ("Mini-DIP")
- **J-14** 14 Lead Ceramic DIP (-14 used only when product is also available in -8 pkg.).
- **K** TO-3 M/C in Steel, except LM309K which is shipped in Aluminum
- **KC** TO-3 M/C (Alminum)
- **K Steel** TO-3 M/C (Steel)
- **N** Molded DIP (EPOXY B)
- **N-01** Molded DIP (Epoxy B) with Staggered Leads
- **N-8** 8 Lead Molded DIP (Epoxy B) ("Mini-DIP")
- **N-14** 14 Lead Molded DIP (Epoxy B) (-14 used only when product is also available in -8 pkg.).
- **P** 3 Lead TO-202 PWR Pkg.
- **S** 14 Lead "SGS" Type PWR DIP (Epoxy B)
- **T** 3 Lead TO-220 PWR Pkg. (Epoxy B)
- **W** Lo-Temp Ceramic Flat Pak
- **W-00, W-01, W-06, W-07** Ceramic Flat Pack with Standard Leadform
- **Z** 3 Lead TO-92 Molded Pkg. (Epoxy B)

Example

Prefix	Device	Suffix
LF	356	N /A+

- LF — Device Family
- 356 — Device Number (Generic Type) and Suffix Letter (Optional)
  - A: Improved Electrical Specification
  - C: Commercial Temperature Range (2nd Source Products)
- N — Package Type
- /A+ — Reliability Program (Optional)

Temperature Ranges

Linear Devices

With proprietary linear circuits, a 1-2-3 numbering system is employed.
The 1 denotes a Military temperature range device (−55°C to 125°C), the 2 denotes an Industrial device (−25°C to 85°C), and the 3 denotes a Commercial device (0°C to 70°C). i.e. LM101/LM201/LM301. Exception to this are the LM1800 Series; some hybrid circuits which employ a "C" Suffix; and second-source products which follow the original manufacturer's numbering system.

Digital Devices

CDXXXX-CMOS —
C Suffix −40°C to 85°C,
M Suffix −55°C to 125°C.

DM54XX — All numbers beginning with 5 denote −55°C to 125°C temperature operation.

DM74XX — If the "74" is indicated, the operating temperature is 0°C to 70°C.

DM7XXX — All other numbers beginning with 7 (besides the "74" shown above) are NSC proprietary products and a 7 here indicates −55°C to 125°C.

DM8XXX — All numbers beginning with 8 denote 0°C to 70°C temperature operation.

Manufacturer Device Identification	Part Number: Prefix	Part Number: Suffix	Example

NATIONAL SEMICONDUCTOR (continued)

Converter Products

Resolution
- **08** 8 Bits
- **10** 10 Bits
- **12** 12 Bits
- **25** 2½ Digit
- **35** 3½ Digit
- **37** 3¾ Digit
- **45** 4½ Digit

Form
- **C** Complete
- **B** Building Block
- **D** Digital Panel Meter Chip
- **M** Module
- **S** Card Systems

Technology
- **P** PMOS
- **C** CMOS
- **H** Hybrid
- **B** Bipolar
- **N** NMOS
- **L** Linear
- **I** I^2L
- Micro CMOS

Prefix	Device	Suffix
AD C	08 00	P C N

Converter Products:
Form
Resolution
More Than One in Family
Technology
Temperature Range
Package

NCM CORPORATION

ncm corporation

Temperature
- **C** Commercial
- **M** Military

Package
- **D** Ceramic DIP
- **F** Ceramic Flatpack
- **L** Leadless Carrier
- **N** Plastic DIP

Digits 1,2
- **20** Metal Gate, Full Custom
- **30** Metal Gate, Semi Custom
- **40** Si-gate, Full Custom
- **50** Bipolar Array
- **60** Si-gate, Semi Custom

Digits 3, 4
- Device No.
- Device No.
- Device No.
- Device No.
- Device No.

Prefix	Device	Suffix
NCM	40 02	Z N

Technology
Device Number
Revision
Package

NEC ELECTRONICS

NEC
NEC Electronics U.S.A. Inc.
Microcomputer Division

Family
- **μP** Micro Product
- **B** Digital Bipolar
- **D** Digital MOS

Package
- **D** Hermetic
- **C** Plastic

Prefix	Device	Suffix
μP D	416	D

Family
Package

NITRON

Nitron

Description
- **NC** Standard
- **NS** System
- **SC** Custom

Family
- **2xxx** Communications
- **4xxx** Memory Systems
- **64xx** Frequency Synthesizers
- **65xx, 68xx** Static ROMs
- **7xxx** MNOS Memories

Temperature Range
- **C** Commercial, 0°C to 70°C
- **E** Extended, −20°C to 85°C
- **T** Telecom/Auto, −40°C to 85°C
- **M** Military, −55°C to 125°C

Package
- **D** Cer-DIP (Glass/Glass) Hermetic
- **F** Flat Pack
- **L** Ceramic (Glass/Metal) Hermetic
- **P** Plastic
- **T** TO-5 Type Metal Can
- **W** Wafers, Probed and Inked
- **X** Die in Waffle Carriers

Prefix	Device	Suffix
NC	6405	PC-0246

Standard
Family
Package
Temperature Range
Custom Code (for Custom Devices)

OPTICAL ELECTRONICS

oei

Description
- **2000** Log/Anti-Log
- **3000** V/F - F/V Phase Detector
- **5000** Non-Linear Functions
- **6000** 3-D System Card
- **9000** Op Amps, Comparators, Current Booster, etc.

PANASONIC (MATSUSHITA)

MATSUSHITA

Description
- **AN** Analog
- **DN** Digital Bipolar
- **M,J** Development Type
- **MN** MOS

Prefix	Device
DN	74LS00

© IC MASTER 1984

Manufacturer Device Identification	Part Number Prefix	Part Number Suffix	Example

PLESSEY

Description

- **MJ** N-Channel MOS
- **ML** MOS Linear (w/Gate Protection
- **MN** MNOS Digital
- **MP** MOS Digital
- **MT** MOS Linear (without Gate Protection)
- **MV** CMOS
- **NJ** N-Channel MOS
- **NOM** MNOS Memory Elements and Arrays
- **TAA, TBA, TCA, TDA** Alternate Sourced Consumer Devices
- **SL** Bipolar Linear
- **SP** Bipolar Digital

Package

- **CM** Multilead TO-5
- **DC** Dilmon
- **DG** Ceramic Dual-In-Line
- **DP** Plastic Dual-In-Line
- **EP** Power Stud
- **FM** Ten Lead Flatpack
- **GC** Leadless Carrier
- **GM** Fourteen Lead Flatpack
- **KM** TO-3
- **QG** Ceramic Quad-In-Line
- **QP** Plastic Quad-In-Line
- **RP** Power Findip
- **SP** Plastic Single-In-Line

(All ICs are marked **PLESSEY**)

Prefix	Device	Suffix
SP	8735B	DG

Description

Package

PRECISION MONOLITHICS

Description

- **AMP** Analog-to-Digital Converter
- **BUF** Buffer (Voltage Follower)
- **CMP** Comparator
- **CRC** Clock Recovery Circuit
- **DAC** Digital-to-Analog Converter
- **DMX** De-Multiplexer
- **GAP** General Purpose Analog Processor
- **JAN** Mil-M-38510 Slash Sheet
- **MAT** Matched Transistors
- **MUX** Multiplexer
- **OP** Operational Amplifier
- **PKD** Peak Detector
- **PM** PMI Second Source Product
- **REF** Voltage Reference
- **RPT** Repeater
- **SMP** Sample/Hold Amplifier
- **SW** Analog Switch

Package

- **H** 6 lead TO-78
- **J** 8 lead TO-99
- **K** 10 lead TO-100
- **P** Epoxy B DIP
- **Q** 16 lead Hermetic DIP
- **R** 20 lead Hermetic DIP
- **T** 28 lead Hermetic DIP
- **V** 24 lead Hermetic DIP
- **X** 18 lead Hermetic DIP
- **Y** 14 lead Hermetic DIP
- **Z** 8 lead Hermetic DIP

Prefix	Device	Suffix
DAC	08	BI E Q/883

Burn-In Option

Electrical Grade

Package

MIL-STD-883 Class B

PRO ELECTRON

First Two Letters

Digital

- **FA - FZ**
- **GA - GZ** Identify the Family
- **etc.**

Solitary Circuits

- **S** Solitary Digital Circuit
- **T** Analog Circuit
- **U** Mixed Analog/Digital

(The second letter has no special significance, except H means Hybrid.)

Third Letter

Temperature Range

- **A** Temp. Range not specified below
- **B** 0°C to +70°C
- **C** −55°C to +125°C
- **D** −25°C to +70°C
- **E** −25°C to +85°C
- **F** −40°C to +85°C
- **G** −55°C to +85°C

If a circuit is designed for a wider temperature range, the letter indicating a narrower temperature range or the letter "A" can be used.

Device or Serial Number

Either a 4-digit number assigned by PRO ELECTRON or the serial number (even a combination of figures and letters) of an existing type designation which can be extended to a minimum of a 4-digit number by adding zeros in front of it.

Suffix or Version Letter (Recommended)

Single Letter

- **C** Cylindrical
- **P** Plastic DIL
- **D** Ceramic DIL
- **Q** Quad-In-Line
- **F** Flat Pack
- **U** (Uncased) Chip

Other letters have no fixed meaning except Z means customized wiring.

Two Letters

First Letter: General Shape

- **C** Cylindrical
- **D** Dual-In-Line (DIL)
- **E** Power DIL (with External Heat Sink)
- **F** Flat (Leads on 2 Sides)
- **G** Flat (Leads on 4 Sides)
- **K** Diamond (TO-3 Family)
- **M** Multiple-In-Line (Except Dual-, Triple-, Quad-In-Line)
- **Q** Quad-In-Line (QUIL)
- **R** Power QUIL (with External Heat Sink)
- **S** Single-In-Line (as TO-127 or TO-220)
- **T** Triple-In-Line

Second Letter: Material

- **C** Metal-Ceramic
- **G** Glass-Ceramic (cerDIP)
- **M** Metal
- **P** Plastic

Prefix	Device	Suffix
GFB	7400	-DP
GMB	74LS00A	-DC
SAC	2000	
TDA	1000	P

PART NUMBER GUIDE

Manufacturer Device Identification	Part Number Prefix	Part Number Suffix	Example

RAYTHEON SEMICONDUCTOR

Temperature
- **LH1, LM1** −55°C to 125°C
- **LM2** −25°C to 85°C
- **LM3** 0°C to 70°C
- **RC** 0°C to 70°C
- **RM** −55°C to 125°C
- **RV** −40°C to 85°C

HA Series
- **HA1** 14-Pin Ceramic DIP
- **HA3** 14-Pin Plastic DIP
- **XR** All Temps

Microcomputer Components
- **R**

Beam Lead Chips
- **RC** 0 to +70°C, C-level (commercial) visual
- **RM** −55 to +125°C, B-level (military) visual
- **NRF** Ray I, II, III TTL device
- **RG** −55 to +125°C
- **RL** B-level visual
- **54LS** Low-Power Schottky TTL, −55 to +125°C, B-level visual

Package

Most Devices
- **BM** 16-Pin Epoxy-B DIP
- **CH** Chip, Visually Inspected to MIL-STD-883B, Method 2010, and Packaged in Waffle Pack
- **CJ** 14-Pin Ceramic Flatpak
- **CL** 16-Pin Ceramic Flatpak
- **CK** 14-Pin Ceramic Flatpak
- **CQ** 10-Pin Ceramic Flatpak
- **DC** 14-Pin Ceramic DIP
- **DD** 16-Pin Ceramic DIP
- **DE** 8-Pin Ceramic DIP
- **DM** 16-Pin Ceramic DIP
- **DZ** 40-Pin Ceramic DIP
- **F** Flatpak
- **FD** 64-Lead Ceramic Flatpak, Side Brazed
- **FV** 28-Pin Ceramic Flatpak
- **FZ** 42-Pin Ceramic Flatpak
- **H** 3, 8 or 10-Pin Metal Can
- **K** TO-3 Power Pack
- **M** 8 or 14-Pin Plastic Micro-Pak
- **LS** 20-Lead Chip Carrier (Square)
- **LV** 28-Lead Chip Carrier (Rectangular)
- **LW** 28-Lead Chip Carrier (Square)
- **MB** 16-Pin Epoxy-B DIP
- **ML** 16-Pin Ceramic DIP, Side Brazed
- **MS** 20-Pin Ceramic DIP, Side Brazed
- **MZ** 40-Pin Ceramic DIP, Side Brazed
- **N** 24-Pin Flatpak
- **N** Epoxy-B DIP (LM Series)
- **NB** 8-Pin Epoxy-B DIP
- **PS** 20-Pin Epoxy-B DIP
- **PU** 24-Pin Epoxy-B DIP
- **PV** 28-Pin Epoxy-B DIP
- **PZ** 40-Pin Epoxy-B DIP
- **R** 24-Pin Ceramic DIP
- **S** Ceramic "Slim-DIP"
- **T** 3, 8, 10 or 12-Pin Metal Can
- **TK** 9-Pin TO-66 Power Pack

Beam Lead Chips
- **BL**

HA Series
- **2** −55°C to +125°C
- **5** 0°C to +70°C
- **8** −55°C to +125°C

XR Series
- **M** Ceramic −55°C to +125°C
- **N** Ceramic −40°C to +85°C
- **P** Epoxy −40°C to +85°C
- **CN** Ceramic 0°C to +75°C
- **CP** Epoxy 0°C to +75°C

Microcomputer Components Package
- **D** Hermetic DIP
- **F** Flatpak
- **P** Plastic DIP
- **X** Chip

Temperature
- **C** 0°C to +75°C
- **M** −55°C to +125°C

Process to MIL-M-883B
- **B** Level B
- **S** Level S

Prefix	Device	Suffix
RC	4136	DB
LM		H
HA1	4741	5
XR	2207	CN

Prefix	Device	Suffix
RC	4151 DE	/ 883B

Temperature
RC 0 to 70°C
RM −55 to 125°C
RV −40 to 85°C
Package
Processing to MIL-STD-883B

Prefix	Device	Suffix
LM	139 J	/ 883B

Package
Processing to MIL-STD-883B

Prefix	Device	Suffix
DAC	10 B D M	/ 883B

Electrical Grade
Package
Temperature
C 0 to 70°C
M −55 to 125°C
Processing to MIL-STD-883B

Prefix	Device	Suffix
REF	01	C T

Electrical Grade and Temperature
Package

Prefix	Device	Suffix
	29611 A D M	B

Performance
A — Enhanced
E — AMD Equivalent
Package
Temperature
Processing to MIL-STD-883B

Prefix	Device	Suffix
RFII	2	CJ

Temperature
0 or 1 −55 to 125°C
2 or 3 0 to 70°C
Package

Raytheon ICs are identified by an **RAY** prefix to the date code.

© IC MASTER 1984

Manufacturer Device Identification	Part Number Prefix	Part Number Suffix	Example

RCA

RCA Solid State

Description
- **CA** Linear ICs
- **CD** CMOS Digital ICs
- **CDM** CMOS — LSI
- **CDP** CMOS — LSI
- **CMM** CMOS — LSI
- **MWS** CMOS — LSI
- **LM** Linear ICs
- **PA** Gate Arrays

Version
- **A** Modified Version, Unilaterally Interchangeable with Prototype
- **B** Modified Version, Unilaterally Interchangeable with A Version, and with Prototype
- **C** Modified Version

Package
- **D** Ceramic DIP
- **E** Plastic DIP
- **EM** Modified Dual-In-Line Plastic Package with "Power Slab"
- **F** Ceramic DIP, Frit Seal
- **H** Chip
- **K** Ceramic Flat Package
- **M** TO-220 Package with Horizontal-Mount Lead Form
- **P** Dual-In-Line Plastic Package with "Power Slab"
- **Q** Quad-In-Line Plastic Package
- **QM** Modified Quad-In-Line Package
- **S** TO-5 Package with DIL-CAN
- **T** TO-5 Package with Straight Leads
- **V1** TO-5 Package with Radial Formed Leads
- **W** Staggered Quad-In-Line Plastic Package

Prefix	Device	Suffix
CD	4070	AD

Version — 4070
Package — AD

RETICON

EG&G RETICON

Previous Products
- **RA** Area Array
- **RL** Linear Array
- **SAD** Serial Analog Delay
- **SAM** Serial Analog Memory
- **TAD** Tapped Analog Delay

New Analog Products
- **R5** Reticon Analog

Family
- **0** Complex Special Functions
- **1** Simple Delays
- **2** Tapped Delay
- **3** Analog Memory
- **4** Correlator
- **5** Multiplexer, Parallel to Serial Converter
- **6** Filters

Code (for Corresponding Products)
- No. of Columns and Lines
- No. of Elements
- No. of Storage Elements
- No. of Storage Elements
- No. of Storage Elements
- No. of Taps

Prefix	Device	Suffix
RA	50x50	A
RL	1024	C
TAD	32	A

Code — 32
Revision — A

Prefix	Device	Suffix
R5 X	YY	A -1

Family — X
Revision (If Required) — A
Member of Device Type (If Required) — -1

ROCKWELL

Rockwell

- **CRC** Telecommunications
- **R** Rockwell

Frequency Range
- **No Suffix** 1 MHz
- **A** 2 MHz
- **B** 3 MHz

Package
- **C** Ceramic
- **P** Plastic

Temperature
- **No Suffix** 0°C to 70°C
- **E** −40°C to 85°C (Industrial)
- **MT** −55°C to 125°C (Military)
- **M** MIL-STD-883, Class B

Prefix	Device	Suffix
R	6502	ACE

Product Type — R
Frequency Range — A
Package — C
Temperature — E

SANYO

Designation
- **LA** Bipolar Linear
- **LB** Bipolar - Digital
- **LC** CMOS
- **LE** MNMOS
- **LM** PMOS, NMOS
- **STK** Thick Film

Prefix	Device
LA	1230

PART NUMBER GUIDE

Manufacturer Device Identification	Part Number: Prefix	Part Number: Suffix	Example

SEEQ

Family
- **5** For Nonvolatile Memory
- **6** For Microcomputer Products
- **8** For Communications

Temperature Range
- **Q** For Commercial Temperature 0°C to +70°C
- **E** For Extended Temperature −40°C to +85°C
- **M** For Military Temperature −55°C to +125°C

MIL-STD-883
Level B Processing

Read access time of memory device (ns)

Organization of memory device (2^1 x 2^3 or 2K x 8)
(This scheme does not apply to partials — a 5212 is a 1K x 8 (or half) partial of the 5213)

Type of Memory
- **1** For EPROM
- **2** For E²ROM

Package Type
- **D** For Cerdip

Example

Prefix	Device	Suffix
D Q 5 2 1 3	—	350 B

Package Type
Temperature Range
Family
Type of Memory
Organization of Memory Device
Read Access Time of Memory Device (ns)
MIL-STD-883 Level B Processing

SGS SEMICONDUCTOR CORPORATION

(Marking)

(Current Logo)

Prefixes assigned by the European Association "PRO ELECTRON" (See PRO ELECTRON)
- **H** High Level Logic
- **HB, HC** CMOS
- **L, LS** Linear Professional
- **M** MOS
- **TAA** Linear Consumer
- **TBA** Linear Consumer
- **TCA** Linear Consumer
- **TDA** Linear Consumer

Prefix	Device
TDA	1200

SIEMENS

Prefixes assigned by the European Association "PRO ELECTRON". (See PRO ELECTRON)

Prefix	Device
SDA	5010
TDA	2030
UAA	170

SIGNETICS

Temperature
- **N** 0°C to +70°C
- **S** −55°C to +125°C
- **NE** 0°C to +70°C
- **SA** −40°C to +85°C
- **SE** −55°C to +125°C
- **SU** −25°C to +85°C

- **55** −55°C to +125°C
- **75** 0°C to +70°C
- **DS** Second Source to National Part Number
- **MC** Second Source to Motorola Part Number
- **ULN** Second Source to Sprague Part Number
- **μA** Second Source to Fairchild Part Number

Device Family
- **CA, DS** Linear Industry Standard
- **DAC** D/A Converter
- **HEF** LOCMOS Family
- **JB** Mil Rel — Jan — Old Desig.
- **JM** Mil Rel — Jan — New Desig.
- **LF, LH** Linear Lndustry Standard
- **LM, MC** Linear Industry Standard
- **MB, MJ** CMOS
- **OM** Linear Industry Standard
- **PCD, PCE** CMOS
- **SAA, SAB** Digital Industry Standard
- **SAF** Digital Industry Standard
- **SD** Linear DMOS
- **SG, TAA** Linear Industry Standard
- **TBA, TCA** Linear Industry Standard
- **TDA, TDB** Linear Industry Standard
- **TEA** Linear Industry Standard
- **UA, ULN** Linear Industry Standard
- **SCN** Microprocessor N Channel
- **SCB** Microprocessor Bipolar
- **SCC** Microprocessor CMOS

Package
- **CK** Philips Die
- **D** 8, 14, 15-Lead DIL Plastic Microminiature (SO)
- **EC** 4-Lead TO-46 can
- **EE** 4-Lead TO-72 can
- **F** 14, 16, 18, 20, 22, 24, 28-Lead DIL CERDIP
- **FE** 8-Lead DIL CERDIP
- **G** 20, 28, 44-Lead Square Leadless
- **H** 4, 8, 10-Lead TO-5 can
- **I** 8, 10, 14, 16, 18, 24, 28, 40, 50-Lead DIL CERAMIC
- **K** 2-Lead TO-3 can
- **N** 8, 14, 16, 18, 20, 22, 24, 28, 40-Lead DIL PLASTIC
- **N14** 14-Lead DIL Plastic for those products available in both 8 and 14-Lead packages, the 14-Lead package will be identified with N14
- **Q** 10, 14, 16, 24-Lead CERAMIC Flat
- **R** 16, 18, 24, 28, 40-Lead CERAMIC-Beryllia-Flat
- **SK** Microprocessor Kits
- **TA** 8-Lead TO-5 can
- **U** 9-, 13-Lead Single-in-Line
- **Y** 24-Pin Ceramic Square Flat-pack with Radial Leads
- **W** 10, 14, 16, 24-Lead CERPAC

Prefix	Device	Suffix
	74123	N
N	8X02	N

Temperature
Package

© IC MASTER 1984

Manufacturer Device Identification	Part Number Prefix	Part Number Suffix	Example

SILICON GENERAL

Prefix

SG Silicon General

Suffix

Characteristics
- **A** Improved Electrical Specifications
- **C** Reduced Temperature Range

Package
- **F** Flat Pack
- **J** 14, 16-Pin DIP (CerDIP)
- **K** TO-3 Power Pack
- **M** 8-Pin Plastic DIP
- **N** 14, 16-Pin Plastic DIP
- **P** TO-220 Plastic
- **R** TO-66 (3-Pin and 8-Pin)
- **T** TO-5 Metal Can (TO-39/99/100/101)
- **Y** 8-Pin DIP (CerDIP)
- **W** 16-Pin Batwing (CerDIP)
- **S** Multiwatt 15
- **L** Leadless Chip Carrier

Example

Prefix	Device	Suffix
SG	1524	J
SG	108A	T

Characteristics

Package

SILICONIX

Prefix

Description
(1, 2 or 3 letters)
- **D** Drivers for FET Switches
- **DF** Digital Function
- **DG** Analog Switches
- **DGM** Analog Switches
- **G** Multi-Channel FETs
- **L** Linear
- **LD** Linear Digital Combinations
- **SI** Siliconix Second Source Parts
- **SJM** QPL Listed Part
- **VN** MOSPOWER FET
- **VQ** MOSPOWER FET

Suffix

Operating Temperating Range — IC's
(1 Letter)
- **A** −55°C to +125°C
- **B** −20°C to + 85°C
- **C** 0°C to + 70°C
- **D** −40°C to + 85°C (Applies to Telecommunication Products Only)
- **B, C, D** temperature range parts receive industrial/commercial processing

Packages — IC's
(1 Letter)
- **A** Metal Can — Hermetic
- **J** Dual-In-Line Package — Plastic
- **K** Dual-In-Line Package — CERDIP
- **L** Flat Package — Hermetic
- **N** Dual-In-Line Package — Plastic Mini-DIP
- **P** Dual-In-Line Package — Side Braze — Hermetic
- **R** Dual-In-Line Package — Side Braze — Hermetic

Process Option
- **/883** MIL-STD-883. Class B
- **(-4)** 160 Hour Burn-In for Industrial and Commercial Parts

Packages — MOSPOWER
- **A** TO-3
- **B** TO-39
- **D** TO-220
- **E** TO-52
- **F** TO-202
- **J** Plastic DIP
- **L** TO-92
- **M** TO-237
- **P** Sidebraze DIP
- **S** TO-66

Example

IC's

Prefix	Device	Suffix
L 144		A P /883
DG 508	X	B K (-4)
DG 211		C J

Device Family

Device Number

Optional Designator for Improved Part

Operating Temperature Range

Package

Process Option

MOSPOWER

Prefix	Device	Suffix
V N	6 7	A B

Verticle MOSPOWER

Substrate

Voltage [x10]

Selection

Geometry

Package

SOLID STATE SCIENTIFIC

Prefix

Product Category
- **SCC** Custom
- **SCL** Logic
- **SCM** Memory
- **SND** Datacom
- **883/** MIL-STD-883 Level B
- **CCL** Mil-STD-883 Level C
- **JCL** 38510

Device Type
Consists of four numerals plus one or two letters

Suffix

Package Type
- **C** Cerdip (Frit-Seal Ceramic)
- **D** Ceramic (Welded-Seal or Side-Brazed)
- **E** Epoxy (Plastic)
- **F** Ceramic Flat Pack (Metal Lid)
- **H** Chip
- **K** Cerpack Flat Pack (Frit-Seal Ceramic)
- **L** Leadless Chip Carrier (Ceramic)

Example

Prefix	Device	Suffix
SCL	4XXXB	C X

Product Category

Device Type

Package

Type Variations

PART NUMBER GUIDE

Manufacturer Device Identification	Part Number Prefix	Part Number Suffix	Example

SOLITRON

(Current) (Discontinued)

Prefix
- **CM** CMOS
- **UC4xxx** Linear
- **UC6xxx** PMOS Memory (discontinued)
- **UC7xxx** PMOS Memory (discontinued)

Process (CMOS)
- **(None)** Limited Operating Voltage Range
- **A** 3-15 Volt Operating Voltage
- **B** 3-18 Volt Operating Voltage

Package Style, Temperature Range (CMOS)
- **D** Ceramic DIP, −55°C to 125°C
- **E** Epoxy DIP, −40°C to 85°C
- **F** Cer DIP (Frit Seal) −55°C to 125°C
- **H** Uncased Die
- **K** Flatpack, −55°C to 125°C

Package Style, Temperature Range (Linear)
- **(None)** TO-99, −65°C to 125°C
- **C** TO-99, 0°C to 70°C
- **CE** 8 lead MINI DIP, 0°C to 70°C
- **ID** Uncased Die

Example

Prefix	Device	Suffix
CM	4000	AD

Package/Temperature

SPRAGUE ELECTRIC

A.

Family
- **UC** CMOS/Complex Array
- **UD** Display Drivers
- **UG** Hall Effect Circuits
- **UL** Linear Circuits
- **UT** Thyristor Arrays

Temperature
- **N** Limited Temperature Range −20°C to +85°C Typical
- **Q** Industrial Temperature Range −40°C to +85°C
- **S** Military Temperature Range −55°C to +125°C
- **X** Preproduction Device

Package
- **A** Plastic DIP
- **B** Plastic DIP with Heat Sink Tabs
- **C** Chip
- **CW** Probed Wafer
- **D** 3-Pin Metal Can
- **E** Leadless Chip Carrier
- **H** Hermetic DIP
- **J** 14-Pin Hermetic Flat Pack
- **L** Plastic SOIC
- **M** 8-Pin Plastic DIP
- **Q** Batwing Quad In-Line
- **R** Ceramic DIP
- **S** 4-Pin SIP
- **T** 3-Pin SIP
- **U** Thin 3-Pin SIP
- **V** Flange Mount TO-3
- **W** 12-Pin SIP
- **Y** TO-92 Transistor
- **Z** 5-Lead TO-220

Example

Prefix	Device	Suffix
UL N	2111	A

Family
Temperature
Package

B.

Family
- **UH** Peripheral Power/Display Drivers

Package
- **C** Hermetic Flatpack
- **D** Hermetic DIP
- **K** Chip
- **P** Plastic DIP

Example

Prefix	Device	Suffix
UH	400	P

Family
Package

STANDARD MICROSYSTEMS

Family
- **COM** Data Communications
- **CRT** CRT Display
- **CG** Character Generator
- **SR** Shift Register
- **KR** Keyboard Encoder
- **ROM** Read-Only-Memory
- **FDC** Floppy Disk
- **CCC** Cassette/Cartridge

Functional Options
- **T** TTL Clock Input
- **H** High Speed
- **ST** ROM
- **STD** Program Options
- **PRO** See Catalog
- **HR** MIL-STD-883 Level B
- **BI** Burned-In
- **A** Speed 20 MHz
- **B** Speed 15 MHz CRT Devices Only
- **C** Speed 10 MHz

Program Options
- **X or XXX** Specifies Mask Program

Package
- **No Letter** Ceramic
- **P** Plastic

Example

Prefix	Device	Suffix
COM	5016	T X P

Family
Function
Program Option
Package

SYNERTEK

Temperature Range
- **None** 0°C to 70°C
- **M** −55°C to 125°C
- **X** Special
- **E** −40°C to +85°C

Package
- **C** Ceramic
- **P** Molded
- **D** Cerdip
- **X** Dice
- **F** Flat Pac
- **T** TO Can
- **K** Leadless Chip Carrier

Example

Prefix	Device	Suffix
SY M C	2114	L3

Temperature Range
Package
Device Code
Performance or Processing Designator

© IC MASTER 1984

Manufacturer Device Identification	Part Number Prefix	Part Number Suffix	Example

TECHNITROL, INC.

Family
MEDM 2

Prefix	Device	Suffix
NEDM 2	100	M Y

Frequency — 10 MHz
Military
Special Testing

TELEDYNE PHILBRICK

TELEDYNE PHILBRICK

Description

1000 Series Operational Amplifier, Module
1300 Series Operational Amplifier, IC
1400 Series Operational Amplifier, FET IC
1700 Series Operational Amplifier Chopper Stabilized
2200 Series Power Supply, AC Input, PC Mount
2300 Series Power Supply, DC Input, PC Mount
2400 Series Power Supply, AC Input, Chassis Mount
4000 Series Digital to Analog Converters
4100 Series Analog to Digital Converters
4200 Series Modular Instrumentation Amplifiers
4300 Series Non-Linear Function Modules
4700 Series Voltage to Frequency and Frequency to Voltage Converters
4800 Series Sample-Hold Amplifiers
4900 Series Deglitchers

TELEDYNE SEMICONDUCTOR

Temperature
A 0°C to 70°C
B −55°C to 125°C
C 0°C to 70°C
M −55°C to 125°C

Package
J Plastic DIP
L CerDIP
N Ceramic DIP
Y Dice
B Flat Package

Device	Suffix
8700	CJ

Temperature
Package

TELEFUNKEN

Note:
ICs are marked TFK

Prefixes Assigned by the European Association "PRO ELECTRON" (See Pro Electron)
Proprietary Devices
U Integrated Circuits
B Bipolar
M MOS

Prefix	Device	Suffix
U	113	B

TEXAS INSTRUMENTS

AC Advanced Bipolar Circuits
SBP Bipolar Microprocessor
SMJ MOS Memory and Microprocesor, 883B
SN Standard Circuit
SNJ JEDEC Standard 883B
TAC CMOS Logic Array
TAL Low-Power Schottky TTL Logic Array
TAT STL Logic Array
TL Linear Circuit
TMS MOS Memory/Microprocesor
TM Microcomputer Module
TBP Bipolar Memory
TC CCD Imager
TCM Telecommunications IC
TIED Infrared Detector
TIL Optoelectronic Circuit
VM Voice Memory Circuit
JANB JM38510 — Qualified Circuits, Level B
JBP JEDED Standard 883B Bipolar PROMs

Package
JT Ceramic DIP, 28-pin, 300-mil
J, JG Ceramic DIP
JD Side braze ceramic DIP
KA, KC, KD, KF Plastic power tab
LP Plastic 3-lead
N, NE Plastic DIP
P Plastic DIP
T Metal Flat Pack
WA, W Ceramic Flat Fack
NT Plastic DIP, 24 pin 300 mil
U Ceramic Flat Pack
NF Plastic DIP, 28 pin 400 mil
FH Single Layer Sq. Chip Carrier JEDEC Standard
FK Multi Layer Sq. Chip Carrier JEDEC Standard
FE Multi Layer Rect. Chip Carrier
WC Ceramic Flat Pack
FG Multilayer Rect. Chip Carrier JEDEC Standard

Prefix	Device	Suffix
SN 74	S188	J

Description
Temperature Range
Package

Prefix	Device	Suffix
TMS	4027	-15 JL

Speed
Package
Temperature Range

Temperature (Most Devices) Digital & Interface Prefixes

Series −55°C to 125°C	Series 0°C to 70°C	Description
54	74	Standard TTL Circuits
54H	74H	High-speed TTL
54L		Low-power TTL
54LS	74LS	Low-power Schottky TTL
54S	74S	Schottky TTL
55	75	Standard Interface Circuits
54AS	74AS	Advanced Schottky TTL
54HC	74HC	High Speed CMOS
54ALS	74ALS	Advanced Low-power Schottky TTL
	76	Advanced Circuits

Bipolar Suffixes
C 0°C to 70°C
E −40°C to 85°C
M −55°C to 125°C

MOS Suffixes
L 0°C to 70°C
M −55°C to 125°C
E −40°C to 85°C
S Special Range

Speed (MOS Only)
— 15 150 ns Max. Access
— 20 200 ns Max. Access
— 25 250 ns Max. Access
— 35 350 ns Max. Access
— 45 450 ns Max. Access

© IC MASTER 1984

Manufacturer Device Identification	Part Number Prefix	Part Number Suffix	Example

TOSHIBA

Description
- **TA** Bipolar Linear
- **TC** CMOS
- **TD** Bipolar Digital
- **TM** MOS

Package
- **P** Plastic
- **M** Metal
- **A** Improved Type
- **C** Ceramic

Prefix	Device	Suffix
TA	7173	AP

TRW LSI PRODUCTS

LSI Products Division
TRW Electronic Components Group

Multiplier Family
- **A** 2nd Generation (3 m)
- **H** 3rd Generation (2 m)
- **K** 4th Generation (1 m)

Example
MPY012AJ2C
MPY012HJ1C
MPY112KJ4C

Family
- **MPY** Triple Diffused Bipolar Multipliers
- **TDC** TRW Triple Diffused Bipolar Catalog Products
- **TDS** TRW Triple Diffused Bipolar Special Products
- **TMC** TRW CMOS Catalog Products
- **TMZ** TRW CMOS Special Products

Screening and Temperature

Temp/Process	Com	883	Com B.I. Only
T_A = 0 to 70°C	C	S	G
T_C = 20 to 85°C	R	T	H
T_C = 30 to 125°C	B	P	W
T_C = 55 to 125°C	F	A	N

For screening and temperature specifics, you must check in each data sheet to see applicable temperature range

Packages
- **B** CERDIP
- **C** Ceramic Chip Carrier (CCP — JEDEC Type C)
- **E** Eurocard PC Board
- **F** Flatpack (FPK)
- **J** Ceramic DIP
- **L** Leaded Chip Carrier
- **P** PC Board
- **B7** 24 LD CERDIP
- **C1** 68 CCP, 50 MIL
- **C2** 44 CCP, 50 MIL
- **C3** 28 CCP, 50 MIL
- **E1** Eurocard Format PC Board
- **E2** E1 Prior to Installing LSI Circuit
- **F1** 64 LD FPK w/o H/S
- **F2** 64 LD FPK w/Round H/S
- **F3** 64 LD FPK w/Finned H/S
- **J0** 64 Pin, Lid Up, No H/S
- **J1** 64 Pin, Lid Down, Flat H/S
- **J2** 64 Pin, Lid Down, Finned H/S
- **J3** 64 Pin, Lid Down, No H/S
- **J4** 48 Pin
- **J5** 40 Pin
- **J6** 28 Pin
- **J7** 24 Pin
- **J8** 18 Pin
- **J9** 16 Pin
- **L1** 68 Leaded Chip Carrier
- **P1** Printed Circuit Board
- **P2** P1 Prior to Installing LSI Circuit

Prefix	Device	Suffix		
TDC	1016	J5	C	10

Package — J5
Screening — C
Electrical — 10

UNIVERSAL SEMICONDUCTOR

Family
- **UM** Memories

Temperature
- **No Letter** 0°C to +70°C
- **X** Special

Package
- **C** Ceramic DIP
- **P** Plastic Molded DIP
- **D** Cerdip

Prefix	Device	Suffix
UM	2147	XD-2

Memory — UM
Temperature Range — X
Package — D
Performance/Speed Range — 2

VLSI TECHNOLOGY

Description
- **VC** Custom
- **VF** Foundry
- **VH** Hybrid
- **VL** Logic
- **VS** User-designed VLSI
- **VT** Memory
- **VU** Design Center

Temperature Range
- **C** Commercial
- **I** Industrial
- **M** Military

Package Type
- **A** Leaded Plastic Chip Carrier
- **C** Sidebrazed Ceramic
- **F** Leadless Ceramic Chip Carrier
- **G** Pin Grid Array
- **P** Plastic DIP
- **T** Leaded Ceramic Chip Carrier
- **V** Die-Plated
- **W** Die in Wafer Form
- **Y** Dip on PC Board
- **Z** Chip on PC Board

Environmental Codes
- **B** Mil Std 883, Level B
- **C** Mil Std 883, Level C
- **I** Burn In
- **J** JAN Product

Prefix	Device	Suffix	
VC	99999	BB	PTE

Bin Code — BB
Package — P
Temperature Range — T
Environmental Code — E

© IC MASTER 1984

Manufacturer Device Identification	Part Number Prefix	Part Number Suffix	Example
WESTERN DIGITAL		**Package** **A** 40 Lead DIP, Ceramic **B** 40 Lead DIP, Plastic **C** 24 Lead DIP, Ceramic **D** 24 Lead DIP, Plastic **E** 28 Lead DIP, Ceramic **F** 28 Lead DIP, Plastic **G** 22 Lead DIP, Ceramic **H** 22 Lead DIP, Ceramic **U** 20 Lead, Ceramic **V** 20 Lead, Plastic	Prefix: TR1602 Device: A (Package) Suffix: 01 (Special Parameter)
ZILOG Zilog an affiliate of EXXON Corporation (Current) Zilog (Discontinued)	**Family** **Z80** **Z** **Speed** **A** 4.0 MHz **blank** 2.5 MHz **B** 6.0 MHz **L** Low Power **H** 8.0 MHz **Device** **CPU** Central Processor Unit **PIO** Parallel Input/Output Unit **CTC** Counter Timer **SIO** Serial Input/Output **DMA** Direct Memory Access	**Package** **C** Ceramic **D** Cerdip **P** Plastic **Q** Ceramic Quad-in-Line **R** Ceramic Piggyback **Temperature** **E** −40°C to +85°C **M** −55°C to +125°C **S** 0°C to +70°C **Definition Of Symbols** ↑ — Price Increase ↓ — Price Decrease **N** New Product **Screening** **S** Standard **M** Military	Prefix: Z Device: 8 4 0 0 Suffix: B P S XX Speed — B Package — P Temperature — S Environmental Flow (E.G. B1) — XX

PART NUMBER GUIDE

GUIDE TO IC LOGOS

The following logos and symbols are provided to help you identify the manufacturers of IC products. Sometimes different marks are used on a company's products, depending upon individual package sizes.

LOGO	MANUFACTURER
	ADVANCED MICRO DEVICES
AMI. A Subsidiary of Gould Inc.	AMERICAN MICRO SYSTEMS
ANALOG DEVICES	ANALOG DEVICES
ANALOGIC	ANALOGIC
BURR-BROWN BB	BURR-BROWN CORPORATION
CHERRY SEMICONDUCTOR	CHERRY SEMICONDUCTOR (Micro Components)
	COMLINEAR CORPORATION
	CONSUMER MICROCIRCUITS
	CYBERNETIC MICRO SYSTEMS
DDC	ILC DATA DEVICE CORPORATION
	DATA GENERAL
DATEL	DATEL
	EXAR INTEGRATED SYSTEMS
FAIRCHILD A Schlumberger Company F	FAIRCHILD
FERRANTI	FERRANTI
F FUJITSU LIMITED	FUJITSU
GENERAL INSTRUMENT GI	GENERAL INSTRUMENT
GTE	GTE MICROCIRCUITS
	HARRIS

LOGO	MANUFACTURER
	HITACHI
HUGHES HUGHES AIRCRAFT COMPANY Solid State Products	HUGHES AIRCRAFT
Hybrid Systems	HYBRID SYSTEMS
IMP	INTERNATIONAL MICROELECTRONIC PRODUCTS
inmos	INMOS
intel	INTEL
interdesign	INTERDESIGN
INTERSIL IMS	INTERSIL
	ITT semiconductors
LSI COMPUTER SYSTEMS	LSI COMPUTER SYSTEMS
	LAMBDA
LINEAR TECHNOLOGY	LINEAR TECHNOLOGY
ML	MASTER LOGIC
MCE	MCE
MTI microcircuits technology, inc.	MICROCIRCUITS TECHNOLOGY, INC.
MN	MICRO NETWORKS
mii	MICROPAC INDUSTRIES

PART NUMBER GUIDE

© IC MASTER 1984

LOGO	MANUFACTURER
	MICRO POWER SYSTEMS
	MITEL SEMICONDUCTOR
	MITSUBISHI
MMI	MONOLITHIC MEMORIES
UNITED TECHNOLOGIES MOSTEK	MOSTEK
	MOTOROLA
NS*	NATIONAL SEMICONDUCTOR
NCR	NCR
NEC NEC Electronics	NEC
Nitron	NITRON
OKI JAPAN OKI*	OKI JAPAN
oei	OPTICAL ELECTRONICS
MATSUSHITA	PANASONIC (Matsushita)
PLESSEY	PLESSEY
PMI	PRECISION MONOLITHICS
RCA Solid State	RCA

LOGO	MANUFACTURER
RAYTHEON	RAYTHEON SEMICONDUCTOR
EG&G RETICON	EG & G RETICON
Rockwell	ROCKWELL (COLLINS)
	SANYO
seeQ Technology, Incorporated	SEEQ TECHNOLOGY, INC.
SGS*	SGS SEMICONDUCTOR
signetics S*	SIGNETICS
SG Silicon General	SILICON GENERAL
SSi	SILICON SYSTEMS
	SILICONIX
SSS	SOLID STATE SCIENTIFIC
SS*	SOLITRON
② SPRAGUE	SPRAGUE ELECTRIC
	STANDARD MICROSYSTEMS
	SUPERTEX

LOGO	MANUFACTURER
S	SYNERTEK
Technitrol, Inc.	TECHNITROL
TELEDYNE CRYSTALONICS	TELEDYNE CRYSTALONICS
TELEDYNE PHILBRICK	TELEDYNE PHILBRICK
	TELEDYNE SEMICONDUCTOR
TFK	TELEFUNKEN
TELTONE®	TELTONE
ti	TEXAS INSTRUMENTS
	THOMSON-CSF COMPONENTS
Torric CORPORATION	TORRIC
Toshiba	TOSHIBA
TRW LSI Products	TRW
UNIVERSAL SEMICONDUCTOR INC.	UNIVERSAL SEMICONDUCTOR
VLSI	VLSI TECHNOLOGY
	WESTERN DIGITAL
Zilog an affiliate of EXXON Corporation	ZILOG

*DISCONTINUED LOGOS PROVIDED TO IDENTIFY OLDER DEVICES.

PART NUMBER GUIDE

© IC MASTER 1984

If you need

IC Master Catalog

you need

Integrated Circuits Magazine.

Not only will Integrated Circuits Magazine update your IC Master Catalog...
...it will provide valuable IC application and selection information in every issue.

SUBSCRIBE TODAY!

Subscription card located inside back cover of Volume I or available from publisher upon request.

APPLICATION NOTE DIRECTORY

The Application Note Directory is a comprehensive guide to the many IC and Microcomputer Board application notes available. It lists the devices covered, describes each note, and tells who publishes each one.

HOW TO USE THE APPLICATION NOTE DIRECTORY

The application notes in this directory can be located by function or device number.

1. To find out what is published by function, locate the closest topics in the index at right, turn to the pages indicated, and scan through the listings.

2. To find all the application notes covering a given device, look up the device in the Part Number Index at the front of this book. The ¶ sign leads to application notes.

The application note descriptions are organized under the headings: Digital, Microprocessor, Microcomputer Boards, Interface, Linear and Memory. Beneath those headings are functional and applications categories arranged alphabetically. Within each category the notes are arranged in alphabetical sequence by title. The mixing of functions and applications is necessary, since application notes do not lend themselves to classification entirely by function or entirely by application. When an application note fits under several categories, it is listed in one and cross referenced by the others. This may mean that you have to spend five minutes checking a number of categories to be sure you've found everything you want, but finding suitable information can save you considerable design time. If an application note covers specific devices or it shows in some detail how certain devices are used, these device numbers are listed in parentheses just below the title.

The application note descriptions are as short as possible. They are designed to save you time in reading while giving an overall sense of the contents. The length of each note is indicated in parentheses on the last line; if the note is bound into a book, the last line will show that it is part of a handbook, databook, catalog, etc.

Once you have determined which application notes you need, check to see if the manufacturer has placed the complete application note in the back of this section (immediately following the short descriptions). If not, contact the manufacturer's sales office or write to the manufacturer. Be sure to give both the title and the application note number. Addresses and phone numbers are listed in the Manufacturers and Distributors Directory.

Category	Page
DIGITAL	
Arithmetic	250
CMOS	250
Consumer	253
Counters	253
General	254
HNIL/HTL	255
High-Speed Logic	256
I²L	257
LSI, General	257
Multiplexers	257
PLAs	257
Pulse Handling	258
Signal Processors	258
TTL	258
Trigger Circuits	259
MICROPROCESSOR	
Applications	259
General	263
I/O	266
Programming	268
Systems	271
MICROCOMPUTER BOARDS	
Applications	278
INTERFACE	
Converters	279
Data Transmission	285
Drivers	287
Encoders	289
MOS/Bipolar	289
Multiplexers	290
Switches	290
LINEAR	
Active Filters	292
Amplifiers, Current	292
Amplifiers, Instrumentation	292
Amplifiers, Operational	293
Amplifiers, Power	296
Amplifiers, RF	297
Amplifiers, Special Purpose	297
Amplifiers, Video	297
Arrays	297
Communications	298
Comparators	300
Consumer, AM/FM	300
Consumer, Audio	302
Consumer, Medical	303
Consumer, TV	303
Current Source	304
Displays	304
Followers	305
General	305
Industrial Control	306
Instrumentation	307
Modulators	309
Multipliers	309
Phase-locked Loops	309
Photosensitive Devices	310
Power Control	310
Power Supplies	311
Preamplifiers	313
Regulators	313
Telecommunications	314
Thermal Considerations	314
Timers	314
Transducers	315
Video	316
Voltage References	316
MEMORY	
Analog	316
Character Generators	317
Controllers	317
EAROMs	317
EEPROMs	318
General	319
Microprogramming	319
PROMs	319
RAMs	320
ROMs	323
Shift Registers	324
CUSTOM/SEMICUSTOM	
Bipolar	324
CMOS	324
Gate Arrays	325
TTL	325

© IC MASTER 1984

DIGITAL

Arithmetic

1 **"A Four-Cycle Butterfly Arithmetic Architecture"**
Explains the background of the FFT and the computational element called the butterfly. A block diagram of the FFT processor is presented and the DAU (data arithmetic unit) architecture is described in detail. The text's description of the four FFT instructions are supplemented by computational diagram, block diagrams, a data flow chart and a timing diagram.
TRW/LSI A-10

2 **"AM25S10 Four-Bit Shifter"**
(AM25S10)
Provides functional description and discusses logic equivalents. Applications: up-shift, down and around end shifts, scaling and fixed multiplication.
Advanced Micro Devices (10pp)

3 **"Applications of the TTL/MSI 93S43 4-Bit by 2-Bit Two's Complement Multiplier"**
(93S43)
How to implement a combinatorial multiplication array of any size for two's complement numbers. How to multiply in other number representations. Speed/hardware tradeoffs, normalization of floating point numbers after multiplying, rounding or truncation of double length products.
Fairchild AN-329 (15pp)

4 **"Arithmetic Arrays Using Standard COS/MOS Building Blocks"**
(CD4001, CD4008, CD4011, CD4013, CD4019)
Describes design of a 32-bit full adder/arithmetic logic system. Discusses four-bit full adder, quad AND-OR select gate, dual D-type flip-flop, input NAND gates, input NOR gates, and arithmetic register.
RCA ICAN-6600 (6pp)

5 **"COS/MOS Rate Multipliers—Versatile Circuits for Synthesizing Digital Functions"**
(CD4089, CD4527)
Describes operation of a rate multiplier, and the effects of cascading. Covers addition, subtraction, multiplication, division, square and higher order roots, frequency ratios and integration. Also discusses symmetric operations.
RCA ICAN-6739 (12pp)

"Fast Multipliers Using TTL Read Only Memories"
See listing under (Memory) ROMs. (Texas Instruments)

6 **"Floating Point Multiplier"**
Explains how to implement a 24-bit floating point multiplier using one MPY-12HJ multiplier and other devices.
TRW/LSI A-6

7 **"High-Speed TTL Adders"**
(DM5483, DM7483)
Describes 16-bit parallel adders, using the DM7283/DM8383, and connections for ripple-carry addition. Also describes BCD adder techniques implemented with these devices. Shows how the devices can be used to improve the performance of MOS storage systems.
National AN-35 (6pp)

Arithmetic (cont)

8 **"LSI Multipliers Application Notes"**
Describes larger and smaller word multiplication, higher speed multiplication and division using multiplication.
TRW/LSI A-1

"MECL 10,000 Arithmetic Elements MC10179, MC10180, MC10181"
See listing under (Digital) High Speed Logic (Motorola).

9 **"Multiplier-Accumulator Application Notes"**
Covers the use of multiplier-accumulators including an explanation of the clock, input and output controls. Other discussions include: larger word accumulations, multiplication plus a constant, operation with microprocessors, digital filters and complex multiplication.
TRW/LSI A-7

10 **"NBCD Sign and Magnitude Adder/Subtracter"**
(MC14560, MC14561)
Describes CMOS parallel adder-subtracters for both signed and unsigned natural binary coded decimal (NBCD) numbers.
Motorola AN-738 (7pp)

11 **"The AM2506—A Latching ALU"**
(AM2506)
Combines four-bit arithmetic logic unit and four-bit latch. Describes application in high-speed multiple word adder, multiple master-slave registers, 16-word arithmetic register, multiplication at 16 MHz rate.
Advanced Micro Devices (4pp)

12 **"Wire-A-Gate with the AM25LS2521 Comparator"**
(AM25LS2521)
Describes device logic and uses of the device for decoding I/O addresses in a microprocessor system. Also covers a combination lock application.
Advanced Micro Devices (8pp)

CMOS

13 **"54C/74C Family Characteristics"**
(MM54C Series, MM74C Series)
Discusses output, noise and temperature characteristics, power consumption, and propagation delay for the 54C/74C logic family.
National CMOS Databook AN-90 (6pp)

"A 3½ Digit DVM Using an Integrated Circuit Dual Ramp System"
See listing under (Linear) Instrumentation (Motorola)

14 **"A COS/MOS PCM Telemetry and Remote Data Acquisition Design"**
(CD4000 Series)
Describes data transmission formats and the following data acquisition sections: analog and digital multiplexers, A/D converters, transmission formatters and system programmers.
RCA ICAN-6289 (12pp)

"A New CMOS Analog Gate Technology"
See listing under (Interface) Switches. (Intersil)

© IC MASTER 1984

DIGITAL

CMOS (cont)

1 **"A Simplified Approach to Testing CMOS Inverters and Gates"**
Bench tests using a power supply and a V-O-M are described. They include continuity, input leakage, quiescent device current, output voltage, noise immunity, output drive current and threshold voltage.
Solid State Scientific AN-107 (4pp)

2 **"A Typical Data-Gathering & Processing System Using CD4000A-Series COS/MOS Parts"**
(CD4000 Series)
Describes data-gathering and processing system using CMOS circuits. Includes discussion of input signal conditioning and transmission, the digital processor unit, receiver, memory, arithmetic unit, display unit, output buffer, output transmitter, receiver, and control unit.
RCA ICAN-6210 (11pp)

3 **"An Introduction to ISO-CMOS Technology"**
Describes the ISO-CMOS process, which offers the low power, high noise immunity, and wide power supply tolerance of CMOS; speeds comparable to those of low-power Schottky TTL; and high functional density.
Mitel Semiconductor MSAN-104 (6pp)

"Application of CD4016A Quad Bilateral Switch"
See "Transmission and Multiplexing of Analog or Digital Signals Using the CD4016A Quad Bilateral Switch" Under (Interface) Data Transmission. (RCA)

4 **"Application of the RCA-CD4093B COS/MOS Schmitt Trigger"**
(CD4093B)
Describes characteristics of the CD4093 quad 2-input Schmitt trigger. Covers applications in waveshaping (sinewave to squarewave, edge delay, edge detection), power-on reset, astable multivibrators and use as a Schmitt trigger for noise immunity.
RCA ICAN-6346 (6pp)

5 **"Applications of CD40107BE COS/MOS Dual Buffer"**
(CD40107BE)
Describes the characteristics of the CD40107BE and the variety of applications including a lamp driver, an LED driver, and a relay driver.
RCA ICAN-6564

6 **"Applications of CMOS Integrated Circuits in Communications Equipment"**
(SCL4000 Series)
Uses of SCL4000 Series circuits as frequency synthesizers, digital frequency displays, frequency scanners, and squelch circuits.
Solid State Scientific AN-108 (4pp)

7 **"Astable and Monostable Oscillators using RCA COS/MOS Digital Integrated Circuits"**
(CD4000 Series)
Describes several techniques used to compensate for the normal threshold variation of MOS devices in the design of stable multivibrator circuits for operation at frequencies up to 1 MHz. Also covers applications for multivibrator circuits including VCOs, voltage controlled pulse-width circuits, and phase-locked VCOs.
RCA ICAN-6267

CMOS (cont)

8 **"Battery-Powered Digital-Display Clock/Timer and Metering Applications Utilizing the RCA CD4026A and CD4033A Decade Counters 7-Segment Output Types"**
(CD4009, CD4010, CD4026, CD4033)
Describes the CD4026A/33A ICs and their use with 7-segment display units. Discusses interface packages and methods to help the designer optimize his system. Includes a discussion of battery-operated systems for digital clocks and watches.
RCA ICAN-6733 (16pp)

9 **"CMOS Analog Multiplexers and Switches; Applications, Considerations"**
Covers selection criteria, parameter definitions, handling and design precautions, typical applications, and other topics concerning CMOS analog multiplexers and switches.
Harris Semiconductor AN-520 (9pp)

10 **"CMOS Databook"**
Primarily contains data sheets, but also includes the following application notes individually described elsewhere: AN-77, 88, 90, 118, 138, 140, 177, 200; DB-5, and MB-18.
National Semiconductor $6

11 **"CMOS Expandable Gates"**
(SCL4402A, SCL4412A)
Compares the transfer characteristics of ordinary CMOS gates to those gates using double buffered output. Includes performance characteristics and discusses expansion of SCL4412A and SCL4402A to 12-input NOR, 16-input OR, and other combinations.
Solid State Scientific AN-102 (3pp)

12 **"CMOS Linear Applications"**
(MM74C00, MM74C02, MM74C04)
Describes use of CMOS devices biased to operate at the midpoint of the transfer characteristics.
National CMOS Databook AN-88 (3pp)

13 **"CMOS Monostable Multivibrators"**
(MC14538B)
Covers theory of operation with emphasis on pulse widths, retriggerable and non-retriggerable operation. Describes use in a tachometer.
Motorola AN-772 (7pp)

14 **"CMOS Oscillators"**
Describes square wave oscillators that can be built with CMOS logic elements.
National CMOS Databook AN-118 (4pp)

15 **"CMOS Wave Shaping and Level Detection"**
Describes methods to obtain modified transfer characteristics of double buffered NAND gates, by connecting inputs together, connecting extra inputs to Vcc, etc. Shows how to obtain variable amounts of hysteresis, and describes systems of level detection using trigger circuits.
Solid State Scientific AN-109 (5pp)

16 **"CMOS, the Ideal Logic Family"**
Talks about the characteristics of CMOS logic. Describes system considerations, interfacing to other logic types, and timing considerations.
National CMOS Databook AN-77 (7pp)

DIGITAL

CMOS (cont)

"CMOS/MOS Interfacing Simplified"
See listing under (Interface) MOS/Bipolar (RCA)

"CMOS/MOS Rate Multipliers—Versatile Circuits for Synthesizing Digital Functions"
See listing under (Digital) Arithmetic (RCA)

1 **"COS/MOS Electrostatic-Discharge Protection Networks"**
(CD4000 Series)
Discussion and illustrations of the various electrostatic-discharge protection networks provided on RCA CMOS parts.
RCA ICAN-6572 (2pp)

2 **"COS/MOS Integrated Circuits Manual"**
(CD4000 Series)
Discusses fabrication, logic system design, and applications of RCA COS/MOS circuits.
RCA CMS-272 $5.00 (168pp)

"Design of Fixed and Programmable Counters Using the RCA 4018A COS/MOS Presettable Divide-by-"N" Counter"
See listing under (Digital) Counters. (RCA)

3 **"Designing with MM74C908, MM74C918 Dual High Voltage CMOS Drivers"**
(MM74C908, MM74C918)
Presents curves for power dissipation design limits. Shows simple driver circuits plus flasher, oscillator, siren and latch applications.
National CMOS Databook AN-177 (12pp)

4 **"Fundamentals of Testing COS/MOS Integrated Circuits"**
Describes the techniques employed in testing CMOS devices to assure their adherence to data sheet specs.
RCA ICAN-6532 (14pp)

5 **"Getting the Most Out of CMOS Devices for Analog Switching Jobs"**
Describes latch-proof junction isolation, floating-body junction isolation, and dielectric isolation as solutions to CMOS problems when applied to analog design.
Harris Semiconductor AN-521 (7pp)

6 **"Guide to Better Handling and Operations of CMOS Integrated Circuits"**
Recommends specific handling and operating practices to minimize the probability of damage in manufacturing and field environments.
RCA ICAN-6525 (5pp)

7 **"Improved CMOS Gate Design"**
(SCL4000 Series)
Description of the output buffering of the SCL4000 Series.
Solid State Scientific AN-105 (3pp)

CMOS (cont)

8 **"Interfacing Analog and Digital Displays with CMOS Integrated Circuits"**
(CD4000 Series)
Details some of the CMOS ICs most suitable for interfacing the electronic circuit and the display. For digital displays, basic display operation is also covered as an aid in selecting the appropriate interfacing device.
RCA ICAN-6595 (12pp)

9 **"Interfacing COS/MOS with Other Logic Families"**
(CD4000A Series)
Describes conditions governing interface of CMOS 4000A series with other logic families.
RCA ICAN-6602 (12pp)

10 **"Interfacing with CMOS"**
Describes the electrical characteristics of CMOS inputs and outputs. Discusses interfacing CMOS with CMOS, PMOS, NMOS, DTL/TTL, HTL, and ECL.
Solid State Scientific AN-104 (5pp)

11 **"Introduction to CMOS Integrated Circuits with Three-State Outputs"**
Describes a wide variety of CMOS ICs incorporating transmission gates with standard logic. Gives design rules. Covers applications in analog switching and multiplexing, digital multiplexing, and data bussing.
Motorola AN-715 (19pp)

"MM54C/74C Voltage Translation/Buffering"
See listing under Interface (National)

"NBCD Sign and Magnitude Adder/Subtracter"
See listing under Arithmetic (Motorola)

12 **"Noise Immunity Comparison of CMOS Versus Popular Bipolar Logic Families"**
Compares the noise immunities of TTL, DTL, HTL, and CMOS logic families. Discusses common noise sources, precautions against noise, noise specification, and standard noise tests.
Motorola AN-708A (8pp)

13 **"Noise Immunity of COS/MOS B-Series Integrated Circuits"**
(CD4000UB Series, CD4000B Series)
Evaluates noise immunity of B-Series CMOS devices with respect to noise-energy immunity, and dc/ac noise-immunity. Includes definitions of test terms, discussion of logic-system noise and rejection, and schematics.
RCA ICAN-6587 (9pp)

14 **"Noise Immunity of COS/MOS Integrated-Circuit Logic Gates"**
(CD4000A, CD4001A)
Evaluates noise immunity of the CD4000A/01A gates with respect to external noise, crosstalk, transmission-line reflections, power-line noise, and ground-line noise. Includes schematics and logic diagrams.
RCA ICAN-6176 (8pp)

15 **"Parallel Clocking of Sequential CMOS Devices"**
(CD4000A Series, CD4000B Series)
Shows how to avoid logic-state errors in cascaded CMOS devices by optimizing clock transition time.
RCA ICAN-6948 (2pp)

© IC MASTER 1984

DIGITAL

CMOS (cont)

1 **"Radiation Resistance of the COS/MOS CD4000A and CD4000B Series"**
(CD4000 Series)
Studies permanent and transient radiation as they affect CMOS devices.
RCA ICAN-6563 (3pp)

2 **"Scanning Logic for RF Scanner-Receivers Using CMOS Integrated Circuits"**
Describes rf scanner-receiver control functions using standard CMOS devices. Covers crystal switching and priority channel monitoring with mention of phase-locked loop designs.
Motorola AN-753 (7pp)

3 **"Understanding Buffered and Unbuffered CMOS Characteristics"**
Presents the relative merits of buffered and unbuffered CMOS devices. Provides background, definitions, and an applications chart.
RCA ICAN-6558 (8pp)

4 **"Understanding CMOS"**
Programmed text covers basic theory, construction, and characteristics of COS/MOS digital integrated circuits. Describes RCACOS/MOS circuits, packaging, specifications, and design factors. Programmed instruction format enables a reader to learn at his own pace.
RCA CPI-279 (80pp) $2.00

5 **"Understanding and Eliminating Latch-Up in CMOS Applications"**
Reviewing the basic theory of SCR operation and its application to CMOS input and output structures, this note explains how design techniques can reduce the risk of latch-up occurences in CMOS analog and digital circuit designs.
Mitel Semiconductor MSAN-107 (16pp)

6 **"Using the CD4047A in COS/MOS Timing Applications"**
(CD4047)
Compares this monostable-astable multivibrator with simpler types of oscillator circuits and discusses applications, including a noise discriminator, low-pass and band-pass filters, a frequency discriminator, and a pulse generator.
RCA ICAN-6230 (13pp)

7 **"Using the CD4520B to Design Dividers with Symmetrical Outputs"**
(CD4520B)
Describes how to use this CMOS counter to divide an input frequency by N where N is any integer from 2 to 256 and obtain outputs with approximately 50% duty cycles.
RCA ICAN-6362 (10pp)

8 **"Using the SCL 4528 Dual Monostable Multivibrator"**
(SCL4528)
Describes operating modes and timing, equations for pulse width calculations.
Solid State Scientific AN-111 (6pp)

Consumer

9 **"Calculator Learns to Keep Time"**
Describes stopwatch and keyboard controlled interval timing functions using the MM5736 calculator chip.
National MOS/LSI Databook AN-119 (8pp)

10 **"Handheld Calculator Battery Systems"**
Describes the tradeoffs in battery performance for 6.5-9.5v calculators driven by 2, 3 and 4 cell as well as 9v. batteries.
National MOS/LSI Databook AN-149 (4pp)

"High Voltage Shift Registers Move Displays"
See listing under (Memory) Shift Registers (National)

11 **"Keyless Lock Circuit"**
(LS7220)
Describes device operation and implementation in a digital lock.
LSI Computer Systems (6pp)

12 **"Timekeeping Advances Through COS/MOS Technology"**
Discusses basic oscillator design considerations, practical oscillator circuits, and some typical timing-circuit applications, including wrist watches, wall clocks, and auto clocks.
RCA ICAN-6086 (12pp)

13 **"Universal Count/Display Circuit"**
(ZN1040AE)
Examines range of applications for a 4-decade up/down counter with BCD and seven-segment outputs. Covers external circuit connections and component values for zero suppression, blanking, decimal-point input, lamp test, and common anode or common cathode LED displays.
Ferranti (23pp)

14 **"Using Standard National Calculators in Industrial and Microprocessor Applications"**
Discusses keybounce and noise rejection, ready signal operation, and zero suppression as they pertain to using calculator circuits in applications.
National MOS/LSI Databook AN-176 (4pp)

Counters

15 **"A 200 MHz Autoranging MECL-McMOS Frequency Counter"**
(MC10000 Series)
Presents basic frequency counter design along with the schematics and diagrams needed to build a 200 MHz autoranging frequency counter.
Motorola AN-742 (11pp)

16 **"A Basic Selection Guide to Digital Counters"**
(CD4017, CD4024, CD4518)
Discusses the advantages of the binary ripple counter and compares it with the Johnson decade counter and the BCD counter. Also covers selection of the most suitable counter for specific applications.
RCA ICAN-6552 (6pp)

"An MSI 500 MHz Frequency Counter Using MECL and MTTL"
See listing under (Digital) High Speed Logic. (Motorola)

DIGITAL

Counters (cont)

1 **"Applications Using the MK50395 Six Decade Counter Display Totalizer"**
(MK50395, MK50396, MK50397)
Discusses use of the counter in batch control position measurement, greater-than less-than detection, automatic stop, frequency counter, darkroom timer, digital tuning, and N-Pulser applications.
Mostek (16pp)

2 **"Battery-Powered 5 MHz Frequency Counter"**
Describes a battery operated 5 MHz counter built with CMOS for low power operation. Discusses methods to minimize power consumption.
Motorola AN-717 (9pp)

3 **"Calculator Chip Makes A Counter"**
(MM5736, MM5739)
Discusses use of the MM5736 calculator chip as a counter operating up to 120 Hz.
National MOS/LSI Databook AN-112 (6pp)

4 **"Design of Fixed and Programmable Counters Using the RCA 4018A COS/MOS Presettable Divide-by-"N" Counter"**
(CD4018)
Describes the use of this device in single-decade and multi-decade fixed and programmable divide-by-"N" counters. System considerations, such as switch simplifications, components minimization, and speed are also discussed.
RCA ICAN-6498 (6pp)

5 **"Five Digit Accumulator/Elapsed Time Indicator"**
(MC14534)
Describes in detail the circuit for a CMOS 5 digit elapsed time indicator and a 99,999 count accumulator with a 1-999 prescaler.
Motorola AN-743 (5pp)

6 **"Keyboard Programmable Divide-by-"N" Counter with Symmetrical Output"**
(MM54C922, MM74C922)
Describes a circuit to divide by 1 through 16 by pushing a single key for each division ratio.
National DB-5 (2pp)

7 **"New CMOS Counting Functions for Real-Time Applications"**
(CDP1878, CDP1879)
This note describes the CDP1878 dual counter-timer; and the CDP1879 real-time clock, a device offering control features, clock generation, and "wall clock" time. Compatible with many general-purpose CPUs, both devices can operate in memory-mapped and I/O modes of CDP1800 Series microprocessors.
RCA ICAN-7116 (11pp)

8 **"The Logical Design of Shift Counters"**
Presents two techniques to aid in designing shift-register counters. Gives results for "sequence tree" and "count multiplication" techniques for cycle lengths of 30 or less. Shows solutions for both "D" flip-flops and J-K flip-flops as the input elements of the shift register.
Motorola AN-576 (8pp)

Counters (cont)

9 **"Using the 'AS867 and 'AS869 8-Bit Counters"**
(SN54AS867, SN74ASA87, SN54AS869, SN75AS869)
Describes of how to cascade these 40 to 50 MHz counters with carry look-ahead, program for modulo N applications, and interface with bused systems.
Texas Instruments AR-SDAA002 (8pp)

10 **"Using the MK5009P MOS Counter Time-Base Circuit"**
(MK5009)
Describes the use of the MK5009 along with complete circuits for a digital frequency meter, pulse generator and digitally-programmable one-shot. Discusses operation of the units oscillator circuit.
Mostek AN-104 (4pp)

11 **"Using the SN74160 Family of Synchronous Counters"**
(SN74160, SN74161, SN74162, SN74163)
Describes carry circuit operation, cascading and programming.
Texas Instruments Application Report CA-174 (7pp)

General

"Criteria for Choosing Resins and Evaluation Tests for Discrete and Integrated Power Devices in Plastic Packages"
See listing under (Linear) General (SGS-ATES)

12 **"Custom Bipolar Integrated Circuits for Automotive Applications"**
Provides overview of bipolar ICs for customized systems in automotive and other applications. Reviews a typical custom development cycle and examines tradeoffs with other approaches.
Sprague TP79-2 (8pp)

13 **"Digital Telephone-System Components - CODECs—and the μ and A Laws"**
Defines terminology associated with converting telephone systems from analog to digital operation; discusses design and operation of codecs as governed by μ and A laws.
RCA ICAN-6941 (7pp)

14 **"Economics of ISL Gate Arrays"**
(8A1200, 8A1260, 8A1542)
Describes manufacturing cost savings achievable by replacing standard 74-series logic with ISL gate arrays.
Signetics

15 **"HMOS Reliability"**
Describes HMOS technology and device operation. Presents failure mechanisms, reliability testing, and test results.
Intel RR-18 (9pp)

16 **"How Cost Effective Are Custom IC's?"**
(MONOCHIP)
Looks at the relative economies of discrete circuit designs versus semicustom IC's at various volume levels. Economic costs often not analyzed such as rework, supervisory overhead, inventory maintenance, quality assurance, and purchasing and stocking costs are included.
Interdesign APN-5 (6pp)

17 **"Logic Design for CMOS and NMOS Monochips"**
(MONOCHIP)
Describes techniques for transforming breadboard logic into MONOCHIP compatible logic using equivalent gates. Uses the 4008 binary adder and 4516 up/down counter as examples.
Interdesign APN-14 (15pp)

© IC MASTER 1984

DIGITAL

General (cont)

1 **"Low Cost Versatile CRT Terminal Using the SND5027 and SND8002"**
(SND5027, SND8002)
Discusses the design of a CRT terminal using two MOS/LSI devices that minimize parts count in the display circuitry.
SSS AN-303 (10pp)

2 **"MOS 100-Bit Word Generator"**
Describes how to build a 100-bit word generator using MOS ICs.
National MB-1 (2pp)

3 **"MOS Clock Savers"**
Design and use of MOS Clock-Drive Networks. Offers tips for saving power and lowering component costs.
National MB-5 (2pp)

4 **"Nonvolatile Logic Applications"**
(MN9102, MN9105, MN9106, MN9107, MN9108)
Provides theory and application of several MNOS ICs that combine logic and nonvolatile memory functions. Example applications include an elapsed-time indicator, last-program memory and decade counter.
Plessey (40pp)

5 **"Special Functions Databook"**
Primarily contains data sheets, but also includes the following application notes described elsewhere: AN-10, 13, 28, 33, 38, 48, 49, 63, 75, 76, 156, 159, 180, 215, 219, 221; MB-9, LB-2, 14, 17.
National Semiconductor $6

6 **"The SND5027 Video Timer-Controller"**
(SND5027)
Describes a user-programmable LSI device containing the logic for generating timing signals required in presentation and formatting video data on CRT monitors.
SSS AN-301 (19pp)

7 **"Touchcontrol Circuits for Capacitance Switching"**
Describes seven MOS ICs that interface with a capacitive keypad panel to form a nonmechanical switching system. Includes discussion on keyboard scanning, noise immunity, switch size, capacitance values, multiplexing, panel construction and output considerations.
American Microsystems Inc. (15pp)

8 **"Worst Case Design For Integrated Circuits"**
Discusses defining worse case conditions of an IC design parameter variations, breadboarding for verification of worse case conditions and parasitic effects.
Interdesign APN-2 (5pp)

HNIL/HTL

"Combining HNIL and CMOS—An Optimum Design Technique"
See listing under (Interface) MOS/Bipolar (Teledyne Semiconductor)

HNIL/HTL (cont)

9 **"Combining HNIL and CMOS—an Optimum Design Technique"**
Outlines advantages of combining HNIL and CMOS devices in system design, includes HNIL/CMOS interface techniques.
Teledyne Semiconductor APB 1 (3pp) Data and Design Manual $5.00

10 **"Design Techniques with HiNIL 367 Quad Schmitt Trigger"**
General discussion of Schmitt Trigger and the differences of the 367, which ignores open inputs and offers 3.5v noise immunity. Applications include line receivers, pulse stretchers, ac detectors, free-running and voltage-controlled oscillators.
Teledyne Semiconductor HiNIL AN-2 (4pp)

11 **"Designing Programmable Controllers with HiNIL"**
(380, 312, 371, 311, 372, 302)
Discusses using HNIL circuits, such as BCD-to-decade decoders, decode counters, buffers, gates and flip-flops, to design programmable controllers ranging in complexity from simple single-output systems to cascaded systems with multiple output.
Teledyne Semiconductor AN-3 (4pp) Data and Design Manual $5.00

12 **"HiNIL 375 Universal Shift Register"**
Operation and applications of this synchronous 4-bit device as a 4 and 8-bit shift-left, shift-right register, 7 and 8-bit parallel-to-serial and serial-to-parallel converters and various counters.
Teledyne Semiconductor HiNIL AN-4 (10pp)

13 **"HiNIL Interface Summary"**
Circuit diagrams show how to interface HNIL devices with TTL/DTL/RTL, TTL, CMOS, PMOS, and NMOS circuits.
Teledyne Semiconductor APB 5 (1pp) Data and Design Manual $5.00

14 **"High Noise Immunity Logic—Powerful, Versatile and Growing"**
Discusses advantages of using HNIL devices in systems operating in electrically noise environments.
Teledyne Semiconductor AN-5 (5pp) Data and Design Manual $5.00

15 **"Keeping the Bugs Out of Microprocessor Systems with High Noise Immunity Logic"**
Discusses the advantages of substituting HNIL interface devices for conventional I/O logic in microprocessor systems.
Teledyne Semiconductor APB 4 (1pp) Data and Design Manual $5.00

16 **"Noise Immunity with Motorola High Threshold Logic"**
(MC660 Series)
Compares noise immunity characteristics between High Threshold Logic (HTL) and standard saturated logic devices. Discusses noise injection and noise reduction techniques.
Motorola AN-298 (5pp)

17 **"Protecting Logic Inputs"**
Discusses the use of resistors, capacitors and diodes for protecting logic-circuit inputs from large voltage spikes.
Teledyne Semiconductor APB 2 (2pp) Data and Design Manual $5.00

DIGITAL

HNIL/HTL (cont)

1 **"The 355 Timer Solves Noise Problem"**
Compares the 355 and 555 timer chips in applications using higher power supply voltages.
Teledyne Semiconductor APB 3 (2pp) Data and Design Manual $5.00

2 **"The HiNIL 347-A Dual Retriggerable One Shot with High Noise Immunity"**
Description and application details for this device are provided along with diagrams showing its use in pulse generators, coincidence detectors, frequency dividers, voltage to frequency and frequency to voltage converters, a pulse absence detector and an ac line presence detector.
Teledyne Semiconductor Digital AN-6 (6pp)

3 **"Using Bipolar Logic To Improve Performance in CMOS and Microprocessor Systems"**
(367, 350)
Discusses applications reflecting advantages of speed, power and noise immunity resulting from combining HNIL, Schottky and CMOS in microprocessor systems.
Teledyne Semiconductor AN-7 (4pp) Data and Design Manual $5.00

4 **"Using High Note Immunity Logic"**
Reviews operating characteristics of NiNIL devices and discusses loading rules and techniques for interfacing to MOS circuits and microprocessors.
Teledyne Semiconductor AN-1 (7pp) Data and Design Manual $5.00

5 **"Using Motorola High Threshold Logic"**
(MC660 Series)
Describes MC660 series ICs and provides many of the characteristics of these units. Application examples include logic translation, line driving, and trigger circuits.
Motorola AN-467 (11pp)

High Speed Logic

6 **"A High Speed FIFO Memory Using the MECL MC1143 Register File"**
(MCM10143)
Describes the required features of a high speed FIFO design. Different approaches are compared and a design is shown using the MC10143 Multiport Register File.
Motorola AN-730 (6pp)

7 **"AC Noise Immunity of MECL 10,000 Integrated Circuits"**
(MECL)
Discusses ac noise immunity. Describes test circuits for measuring this immunity and the results to be expected for MECL 10,000 circuits.
Motorola AN-592 (6pp)

8 **"An MSI 500 MHz Frequency Counter Using MECL and MTTL"**
(MECL)
Describes design of 8-digit LED readout counter using MECL III, 10,000 and TTL. Discusses two prescalers using MECL, two input amplifier designs, and a time-base controller for the counter's multiphase clock.
Motorola AN-581 (9pp)

High Speed Logic (cont)

"Bussing with MECL 10,000 Integrated Circuits"
See listing under (Interface) Data Transmission (Motorola)

9 **"F10,000 Series ECL"**
(ECL Series)
Operation and circuit parameters are described for the Fairchild ECL Series.
Fairchild AN-330 (6pp)

10 **"IC Crystal Controlled Oscillators"**
(MC1023, MC1662, MC10101, MC10116)
Describes use of MC1023 OR/NOR gate as an amplifier and oscillator. Discusses square wave oscillator circuits with crystal control capable of output frequencies up to 150 MHz. Examples use MC10116/10101, and MC1662.
Motorola AN-417B (4pp)

11 **"Interconnection Techniques for Motorola's MECL 10,000 Series Emitter Coupled Logic"**
(MECL)
Describes some of the characteristics of high digital signal lines and gives wiring rules for MECL 10,000 circuits. Discusses p-c board interconnects, board-to-board interconnects, and includes wire-wrapping techniques.
Motorola AN-556 (22pp)

12 **"Interfacing with MECL 10,000 Integrated Circuits"**
(MC1650, MC1692, MC10115, MC10116, MC10124, MC10125, MC10128, MC10129, MC10216)
Discusses circuits to interface ECL with TTL, TTL and IBM busses, MOS, low level signals, and LEDs.
Motorola AN-720 (9pp)

13 **"M10800 MECL LSI Circuits are Designed for High-Performance Microprogrammed Processors"**
Describes individual family members and how they tie together in a system. Includes block diagrams of devices and an instruction set table for the processor.
Motorola AN-792 (12pp)

14 **"MECL 10,000 Arithmetic Elements MC10179, MC10180, MC10181"**
(MC10179, MC10180, MC10181)
Describes 10180 dual adder/subtractor, 1018 4-bit arithmetic logic unit/function generator, and 10179 lookahead carry block. Discusses their operation in parallel adders, in both ripple and look ahead systems.
Motorola AN-709 (11pp)

15 **"MECL Positive and Negative Logic"**
(MECL)
Describes equivalences between positive and negative ECL logic and provides guides for converting between them.
Motorola AN-567 (2pp)

16 **"Measure Frequency and Propagation Delay with High Speed MECL Circuits"**
(MECL)
Describes ECL frequency counter useful to 160 MHz and a propagation delay measuring circuit capable of 100-picosecond resolution.
Motorola AN-586 (2pp)

© IC MASTER 1984

DIGITAL

High Speed Logic (cont)

1 **"Simulate MECL System Interconnections with a Computer Program"**
Develops a basic computer program that allows the user to simulate the performance of signal lines and to analyze-termination techniques. Applies to ECL and other highspeed digital systems.
Motorola AN-700 (10pp)

2 **"Testing MECL 10,000 Integrated Logic Circuits"**
(MECL)
Describes AC and DC tests in a 50 ohm transmission-line environment for measuring logic levels or noise margins, circuit current, input currents, propagation delays, edge speeds, and flip-flop toggle rates.
Motorola AN-579 (6pp)

3 **"The MC1600 Series MECL III Gates"**
(MC1660, MC1661, MC1662, MC1663, MC1664, MC1665)
Gives typical operating characteristics and explains the operation of various gates in the MECL III family. Describes recommended layout, breadboarding, and testing procedures.
Motorola AN-504 (14pp)

4 **"Understanding MECL 10,000 DC and AC Data Sheet Specifications"**
(MECL)
Discusses basic MECL 10,000 gate structure, transfer curve and dc levels. Covers specifications data sheet, including power supply drain current, high and low output voltages, propagation delay, rise and fall times, and toggle frequency.
Motorola AN-701 (7pp)

5 **"Using Shift Registers as Pulse Delay Networks"**
(MC10135)
Discusses a high-speed delay shift register using the MC10135 flip flop.
Motorola AN-565 (3pp)

6 **"Video Terminal Strips Down to 26 MOS/LSI Chips"**
Discusses the use of single or multiple chip sets to implement the functions of a smart video terminal—programmable I/O and counters, keyboard scanner and encoder, baud rate generator, memory and video timer and controller.
Standard Microsystems AR3-3 (4pp)

I²L

7 **"Custom IC Design I²L Technology"**
(XR-IIL-CHIP)
Compares I²L to other technologies. Describes design procedure for linear and digital circuits using master chips.
Exar (5pp)

8 **"Digital Display Systems"**
Discusses decoding, format, multiplexing, zero suppression for LED, LCD, incandescent, fluorescent and gas discharge displays.
Fairchild AN-212/2 (24pp)

I²L (cont)

9 **"Monolithic I²L Test Circuit Using XR-C409"**
(XR-C409)
A monolithic test circuit has been developed for evaluation of speed and performance capabilities of Exar's I²L technology. This test circuit, designated the XR-C409, is intended to familiarize the I²L user and the system designer with some of the performance features of I²L such as its frequency capability and power-speed tradeoffs.
Exar AN-17 (4pp)

LSI, General

10 **"Semi-Custom LSI Design with I²L Gate Arrays Using XR300 and XR500"**
A design approach to developing complex LSI systems using the devices is described.
Exar AN-16 (6pp)

Multiplexers

11 **"TTL MSI Multiplexers and Demultiplexers"**
(DM7210, DM7842, DM8210, DM8842)
Describes features of DM7210 multiplexer and DM7842 demultiplexer and discusses their use in a synchronous digital data transmission system, a keyboard entry decoder, and as minterm generators.
National AN-37 (8pp)

PLAs

12 **"Field Programmable Logic Arrays—An Application Manual"**
Covers basic FPLA operation and describes various applications, including a data cartridge tape drive controller, an opcode decoder for the PDP-11, and a combination sync and video generator.
Signetics (116pp)

13 **"How to Design with Programmable Logic Arrays"**
(DM8575, DM8576)
Discusses operation of PLAs and use as code converters, decode elements in digital processors and sequential controllers.
National AN-89 (8pp)

14 **"Programmable PROM Memory Expansion"**
(82S102, 82S103)
Describes the use of FPGA in memory intensive systems, which may accept 4K, 8K, 16K, 32K, or 65K PROMs, simply by editing the FPGA program.
Signetics AB-005 (4pp)

15 **"Single Chip Multiprocessor Arbiter"**
Shows how the Field Programmable Logic Sequencer (FPLS) can use state logic to implement a multiprocessor arbiter conveniently and cost effectively.
Signetics AN-007 (4pp)

DIGITAL

Pulse Handling

1 **"Nanosecond Pulse Handling Techniques in I/C Interconnections"**
Discusses problems of pulse transmission and measurement for TEM mode on coax, stripline, and above-ground wire systems.
Motorola AN-270 (6pp)

Signal Processors

2 **"2920 Analog Signal Processor Design Handbook"**
(2920)
Through background review and design examples, explains how analog signal processing can be performed with digital signal processing techniques.
Intel (128pp) $7.50

3 **"An LSI Digital Signal Processor for Airborne Applications"**
Discusses the background of digital signal processing with emphasis on radar processors. Described is a digital signal processing board, employing a multiplier-accumulator IC, that includes the basic processor, address generators, controller and system interface.
TRW/LSI A-12

4 **"Bipolar VLSI for High Performance Digital Signal Processing"**
Explains the triple diffusion process used by TRW LSI Products to produce multipliers and multiplier-accumulators. Also included are multiplier configurations for recursive and non-recursive filters and FFTs.
TRW/LSI A-3

5 **"Digital Signal Processing for Radar Systems"**
Shows how VLSI multipliers and multiplier-accumulators can be used in a radar signal processor to achieve: data rate reduction, by means of predictive mechanization; pulse compression, utilizing an FIR matched filter; maximum computational capabilities, via pipelining; high speed convolution, using 2-point DFTs and a complete FFT processor.
TRW/LSI A-2

6 **"General Purpose Formant Speech Synthesizer Module Using the Intel 2920 Signal Processor"**
(2920)
Describes phoneme-based speech synthesizer design using the 2920 signal processor.
Intel AP-111 (24pp)

7 **"Hardware Development for a General Purpose Digital Filter Computing Machine"**
Describes the architecture and design of the arithmetic logic unit (ALU) for a digital filter computing machine. The computer control unit (CCU) required to drive the ALU is also explained; the CCU receives user-programmed instructions, interprets them and directs the ALU to perform the appropriate computations.
TRW/LSI A-9

8 **"High-Speed Servo Control with the 2920 Signal Processor"**
(2920)
Describes techniques and principles associated with digital (vs. analog) control system design; includes detailed application examples.
Intel AP-124 (40pp)

Signal Processors (cont)

9 **"Introduction to the Z-Transform and its Derivation"**
A tutorial discussion of LaPlace and Z-transforms and their use in sampled data systems. Application of the Z-transform to filter synthesis is also treated.
TRW/LSI A-4

10 **"Second Order Recursive Digital Filter Design with the TRW Multiplier-Accumulators"**
Develops the fundamental concepts for second order recursive digital filters and describes some efficient hardware implementations using the TDC1010J multiplier-accumulator.
TRW/LSI A-8

11 **"Using the 2920 Signal Processor in Modem Applications"**
Discusses modem design using digital signal processing techniques and detailed design examples for various modems.
Intel AP-117 (40pp)

TTL, General

12 **"54ALS/74ALS Schottky TTL Applications"**
Complete family characteristics and guidelines for system designs are provided.
Texas Instruments AR-B215 (40pp)

13 **"Digital Phase-Locked Loop Design Using SN54/74LS297"**
(SN74LS297, SN54LS297)
Describes the operation and typical applications of digital phase-locked loop design.
Texas Instruments AR-SCA-206A (28pp)

14 **"9338 8-Bit Multiple Port Register"**
(9338)
Describes the features of this device, the TTL/MSI equivalent and parallel serial expansion capabilities. Covers use as three address arithmetic unit with eight registers, and use in a first-in first-out memory.
Fairchild AN-294 (6pp)

15 **"Characteristics and Applications of Tri-State IC's"**
(DM7093, DM7490, DM7214, DM7230, DM7551, DM7598, DS7831, DS8831)
Describes application of the general configuration of the Tri-State logic family and discusses application of the following: quad bus-buffer gates, dual 4:1 multiplexer, demultiplexer and bus-interchange switch, quad-D flip-flop, expandable 256-bit ROM, and quad driver.
National AN-45 (12pp)

16 **"Medium Scale Integration in the Numerical Control Field"**
(MC4016, MC4018, MC4024, MC4044, MC4324, MC4344)
Discusses operation of MC4016 decade programmable cascadeable counter, MC4324/4024 dual voltage controlled multivibrator, and MC4344/4044 frequency phase detector. Describes applications of these devices in audio frequency comparator, frequency synthesizer, and motor speed control circuits.
Motorola AN-541 (10pp)

DIGITAL

TTL, General (cont)

1 **"Microprocessor—GPIB Interfacing with the 96LS488"**
(96LS488)
Shows how to interface instruments and system components that talk, listen or talk and listen in accordance with the IEEE-488 standard for programmable instrumentation. Sample applications demonstrate use with various microprocessors.
Fairchild Application Note 351 (24pp)

2 **"TTL Integrated Circuits—Applications of MSI Devices"**
Covers counters, modulo-N dividers, decoders, switches, adders, comparators, parity generators, shift registers and bus-ORable flip-flop. Describes many applications, including up/down counters, a stepping waveform generator, shift registers, frequency synthesizers, digital data demultiplexer, analog commutator, minterm generator, ripple carry parallel adder and tape position locator.
National AN-36 (23pp)

3 **"TTL/MSI 9334 8-Bit Addressable Latch"**
(9334)
Describes operation and application, including 16 and 32-bit addressable latches, 16-word by 4-bit memory, demultiplexer and decoder, 8-bit A/D converter and a 16-bit serial-to-parallel converter.
Fairchild Application Note 220 (8pp)

4 **"Tri-State Logic Applied in a Computer System Can Reduce System Cost and Provide Added Performance"**
(DM8556)
Analyzes Tri-State characteristics using the DM8556 counter/register as an example. Shows how performance of PDP-8 can be improved using TSL.
National AN-73 (7pp)

5 **"Tri-State Logic in High Speed Memories of Microprogrammed Computers"**
(DM8551)
Discusses tri-state logic in general and its use in scratchpad memories. Covers storage of microinstructions and program constants in high-speed ROMs.
National AN-47 (5pp)

6 **"Tri-State Logic in Modular Systems"**
(DS7831, DM8093, DM8094, DM8214, DM8230, DM8551, DM8552, DM8598, DS8831, DM8840, DM8842, DM8846)
Discusses output drive characteristics logical control, safety factors in Tri-State Logic circuits. Describes applications, including complex switching functions, driving and transmitting, multiplexing, data storage, decoding, and data manipulation.
National AN-43 (16pp)

Trigger Circuits

"1.3 Volt IC Flasher, Oscillator, Trigger, or Alarm"
See listing under (Linear) Timers (National)

7 **"CMOS Schmitt Triggers"**
(MC14093B, MC14583B, MC14584B)
Operating characteristics, theory of operation, and Schmitt trigger applications are covered for digital logic systems.
Motorola AN-768A (8pp)

Trigger Circuits (cont)

8 **"CMOS Schmitt Trigger—a Uniquely Versatile Design Component"**
(MM54C14, MM74C14)
Analyzes CMOS Schmitt triggers and outlines applications including a light activated switch, an RC oscillator, and a pulse stretcher. Also outlines the benefits of hysteresis.
National MOS/LSI Databook AN-140 (6pp)

9 **"Designing with SN54/74LS123 Dual Retriggerable Monostable Multivibrators"**
(SN54LS123, SN74LS123)
Includes descriptions of device used in frequency discrimination, missing pulse detection, pulse width detection, frequency doubling.
Texas Instruments Application Report CA-196 (12pp)

10 **"Schmitt Triggers and Multivibrators"**
(MONOCHIP)
Discusses implementation of Schmitt triggers and multivibrators on an NMOS gate array. Presents design considerations and electrical characteristics for both at 5 and 12 V.
Interdesign APN-13 (7pp)

11 **"Using the CMOS Dual Monostable Multivibrator"**
(MM54C221, MM74C221)
Discusses device theory, accuracy, and diagrams typical applications including oscillator circuits, a frequency magnitude comparator, and a linear VCO.
National CMOS Databook AN-138 (6pp)

MICROPROCESSOR

Applications

12 **"279X Application Note No. 1"**
(WD279X)
Describes 279X floppy disk controller design with 8080, 8085, and Z80 microprocessors. Includes timing charts and software examples.
Western Digital AN-1 (24pp)

13 **"279X Application Note No. 2"**
(WD279X)
Describes 279X floppy disk controller design with 6800, 6809, and 6502 microprocessors. Includes timing charts and software examples.
Western Digital AN-2 (22pp)

14 **"279X Application Note No. 3"**
(WD279X)
Describes 279X floppy disk controller design with 8086, Z8000 and 68000 microprocessors. Includes timing charts and software examples.
Western Digital AN-3 (26pp)

15 **"68047 Video Display Generator"**
(S68047)
Describes a low cost IC that provides a link between an MPU and a standard black and white or color television set. Includes software implementation.
American Microsystems AN796801 (12pp)

MICROPROCESSOR

Applications (cont)

1 **"A Dual Processor System for Use in the EXORciser"**
Introduces dual processing and presents the design of a dual processor system for use in the EXORciser. In the system discussed, the μP's have control of a common bus on opposite phases of the clock.
Motorola AN-777 (13pp)

2 **"A General Purpose Frequency Counter Using an M6805 HMOS/M146805 CMOS Family Microcomputer"**
(M6805, M146805)
Provides information for designing a general-purpose microcomputer-controlled frequency counter.
Motorola Semiconductor AN885 (6pp)

3 **"A Low Component Count Video Data Terminal Using the DP8350 CRT Controller and the INS8080 CPU"**
(DP8350, INS8080A, INS8250)
Describes a video data terminal system. Provides block diagrams and short descriptions of individual circuit elements as well as system schematic.
National Interface Databook AN-199 (10pp)

4 **"A Low Cost-MOS/LSI Based Smart CRT Terminal"**
(CRT5037, KR3600, ROM4732, CRT8002, COM8046, COM8251, 8085)
Presents design of a "smart" word editing CRT terminal with 29 IC's and programmable format.
Standard Microsystems AN3-1 (20pp)

5 **"A Low-Cost Regulator for Microprocessor Applications"**
(VN4000A)
Describes the construction of a 100 kHz multiple output switching regulator using two VN4000A MOSPOWER FETs.
Siliconix DA80-1 (11pp)

6 **"A Low-Cost Terminal Using the MC6801"**
(MC6801, MC6847, MC1372)
Provides instructions by using an unmodified television set as a monitor terminal by applying a microcomputer, a video display generator and an RF modulator. Includes wiring diagram, program flow chart and program listing.
Motorola AN-798A (21pp)

7 **"A Matrix Printer Controller Using the F8 and F3870 Circuits"**
(F8, F3870)
Describes the construction of a matrix printer controller using the devices. Includes software listings and diagrams.
Fairchild AN-340 (15pp)

8 **"A Single Board Terminal Using the Z8690 Universal Peripheral Controller"**
(Z8590)
Describes the I/O part of a computer system in its most rudimentary form, and shows how a universal peripheral controller can be used to offload routine processing tasks from a CPU.
Zilog (23pp)

9 **"An Intelligent Terminal with Data Link Capability"**
(MC6809, MC6845, MC6844, MC6854, MC6844)
Describes the construction of a small but powerful terminal complete with high-speed data link. Operating systems can be developed to make the terminal act as a word processor, point-of-sale terminal or data input source.
Motorola Semiconductor AN-830 (44pp)

Applications (cont)

10 **"An Interactive Graphic System Using the MC6809"**
(MC6809, MC6847, MC1372)
Details procedures for implementing cost-effective graphic displays on the video screen of a small business computer.
Motorola Semiconductor AN-825 (28pp)

11 **"An Introduction to Digital Spectrum Analysis including a High Speed FFT Processor Design"**
Describes the design of a high-speed FFT processor, particularly the architecture and address generation. Also included is an explanation of the use of bit-slice microprocessors as FFT sequencers.
TRW/LSI A-11

12 **"An R6500/1 Microcomputer-Based Printer Controller"**
(R6500/1)
Details the cost-effective application of the R6500/1 to printer control. Covers printer interface, drive, and timing, buffer management, and interrupt routines.
Rockwell No. 237 (55pp)

13 **"Analog-to-Digital Conversion Using the S2000 Family"**
(S2000)
Presents four a/d conversion schemes of varying complexity incorporating the device. Block diagrams are supplied.
American Microsystems AN-79-2K-10 (4pp)

14 **"Application Summary for the MC6805R2-1 Single-Chip Microcomputer"**
(MC6805R2-1)
Gives a detailed explanation and circuit diagrams of the five application modes in which the MC6805R2-1 may be operated (monitor mode, software serial loop, stand-alone A/D Converter, triac controller mode, and color organ mode). A complete program listing for the device is included.
Motorola Semiconductor AN-869 (50pp)

15 **"Automatic Multipoint Pressure Measurement"**
(INS8060)
Details design procedures for making a multipoint pressure measurement and control system using a microcomputer with 12-bit A/D resolution; includes software program listing.
National Semiconductor AN-235 (16pp)

16 **"Bicycle Computer Using the MC146805G2 Microcomputer"**
(MC146805G2)
Provides schematics, parts layout and computer program listing for construction of a bicycle computer. The computer features include instantaneous speed and average speed measurement, resettable trip odometer, resettable long-distance odometer, cadence, and calibration for wheel size.
Motorola Semiconductor AN-858 (28pp)

17 **"CRT Terminal Design Using the 8275 and 8279"**
(8275, 8279, 8224, 8080, 8257, 8228, 8212, 8251, 2708, 2714, 2716)
Provides component descriptions and system design details needed to apply the 8275 programmable CRT controller and 8279 programmable keyboard/display interface in CRT systems. Flowcharts, sample code, and schematics included.
Intel AP-32 (57pp)

© IC MASTER 1984

MICROPROCESSOR

Applications (cont)

1 **"Communication Interfaces for the IMP-16"**
(IMP-16)
Describes the use of this microprocessor in leased line and switched line applications with the communications conforming to EIA standard RS232-C.
National AN-152 (13pp)

2 **"Controlled Dot Matrix Printer S9900"**
(S9900)
Describes use of the device to control a 7040 series dot matrix printer. Supplies block diagram, flowchart, and software listing.
American Microsystems AN-79-99-03 (7pp)

3 **"Correcting Errors Digitally in Data Acquisition and Control"**
(SDM856/857, MP20, MP21)
Describes how to combine a microprocessor with analog techniques to optimize the compensation of gain and offset errors in digital data-acquisition and control applications.
Burr-Brown Research AN-101 (6pp)

4 **"Data Acquisition Networks with NMOS and CMOS"**
(MC14433, MC6800)
Discusses an 8-channel acquisition network using the MC14433 A/D converter and the MC6800 microprocessor.
Motorola AN-770 (11pp) MP000500

5 **"Data Handling with the IMP-8"**
(IMP-8, IMP-16)
Covers basic concepts for transferring data from a memory to peripherals.
National AN-117 (4pp)

6 **"Details of INS1771 FDC"**
(INS1771)
Introduces the device and its command set. Provides timing diagrams and system block diagrams.
National AN-220 (10pp)

7 **"Direct Memory Access with the 8257 DMA Controller"**
(8257, 8080A, 8085A)
Examines determining the need for DMA, operation of the device and its application in an MCS-85 system controlling a Burroughs self-scan display panel. Includes diagrams, flowcharts, and software.
Intel AP-48 (4pp)

8 **"FD179X Application Notes"**
(FD179X)
Describes devices and their operation. Includes schematics and timing diagrams.
Western Digital (16pp)

9 **"Floppy Disk Drive Controller Design Considerations Using the MB8876A/MB8877A"**
(MB8876A, MB8877A)
Describes the design and use of a single-chip floppy disk formatter/controller which performs all the functions necessary to read or write data to any type of floppy disk drive.
Fujitsu AN-001 (10pp)

Applications (cont)

10 **"Function/Application of the LD122/LD121A ±4½ Digit A/D Converter Set in Measurement Systems"**
An updated version of AN77-3 extending system resolution beyond 10 μV. Describes interfacing guidelines and precautions.
Siliconix AN80-8 (9pp)

11 **"Graphics Using the DP8350 Series of CRT Controllers"**
(DP8350)
General discussion on using the device in CRT graphics applications. Topics covered include using line buffers and memory mapped graphics.
National AN-212 (4pp)

12 **"High-Speed Data Communications Link Using an MC68121 IPC and MC6844 DMAC"**
(MC68121, MC6844)
Describes a microcomputer system designed to provide efficient data transfer. In the system, direct memory access is used to perform data transfers between memory and the data communication link. Includes schematics and timing diagrams.
Motorola Semiconductor AN-886 (8pp)

13 **"High-Speed Digital Servos for Motor Control Using the 2920/21 Signal Processor"**
(2920, 2921)
Describes the use of a single 2920 for implementing a whole position, servo control loop, including tachometer, compensation networks, nonlinear velocity control, and the logic operations required to switch between the different control modes.
Intel AP-124 (36pp)

14 **"Initializing the CIO"**
(Z8536, Z8036)
Explains how to initialize the Z8536 and Z8036 counter/timer and parallel I/O units, whose handshake control, bit manipulation, pattern recognition, and interrupt control capabilities extend the range of applications beyong that of traditional counter/timer and parallel I/O circuits.
Zilog (13pp)

15 **"Intelligent Fast Disk Controller Using AM29116"**
(AM29116)
Describes a disk controller using the AM29116 16-bit bipolar microprocessor. Includes microcode.
Advanced Micro Devices (67pp)

16 **"Interfacing M6800 Peripheral Devices to the MC68000 Asynchronously"**
(M6800, MC68000)
Describes a technique for interfacing peripheral devices to an MC68000 microprocessor using a 4-chip TTL circuit.
Motorola Semiconductor AN-808 (9pp)

17 **"Keyboard Display Scanning with Intel's MCS-48 Microcomputers"**
(8035, 8039, 8048, 8049, 8021, 8022, 8748, 8041, 8741)
Presents a software package for interfacing the devices to keyboards and displays. Includes circuit diagrams as well as program details.
Intel AP-40 (24pp)

18 **"Low Cost Versatile CRT Terminal Using the CRT5027 and CRT8002"**
(CRT5027, CRT8002)
Describes devices and their uses in a CRT terminal with a screen format of 16 rows of 64 characters. Provides schematics, block diagram, and the changes required for an 80 character/row, 24 row format.
Standard Microsystems AN2-1 (11pp)

MICROPROCESSOR

Applications (cont)

1 **"Memory-Mapped I/O"**
(TMS9900, TMS9927)
Discusses a technique for transferring 8 or 16 bits in parallel to an I/O port. The method is useful for applications requiring the transfer of complete bytes or words such as for parallel communication links.
Texas Instruments (6pp)

2 **"Microprocessor I/O Techniques"**
(TMS9900)
Discusses the selection of the proper I/O mode for different applications to simplify hardware interface and associated software.
Texas Instruments (6pp)

3 **"Microprocessor Mates with MOS/LSI Keyboard Encoder"**
(IMP-16)
Shows how to interface a keyboard to the IMP-16 microprocessor for text editing.
National MOS/LSI Databook AN-128 (6pp)

4 **"Motor RPM Control: An INS8060 Multiprocessor Example"**
(INS8060)
Examines multiprocessor theory and system implementation. Includes circuit diagrams and software listings.
National AN-201 (10pp)

5 **"Motorola MC6845 CRTC Simplifies Video Display Controllers"**
Describes a display terminal using LSI circuits to reduce circuit complexity and the number of components required.
Motorola AN-851 (22pp)

6 **"Multimicroprocessor-Based Transistor Test Equipment"**
A modular, low-cost, multiprocessor transistor test system is described, along with its use for testing both traditional parameters and those characteristics directly related to an application.
RCA ICAN-7020 (8pp)

7 **"Multiprocessor Controller Using the MC6809E and the MC68120"**
(MC6809E, MC68120)
Discusses the advantages of using a multi-processor system to provide for throughput expansion without the need for total redesign of the existing system. Includes schematics, block diagrams and flow charts.
Motorola AN-850 (20pp)

8 **"Musical Application for the S2000 Microcomputer"**
(S2000)
Describes capabilities on the device when programmed to generate any of 60 musical frequencies and play on command any one of the twelve pre-programmed tunes.
American Microsystems AN-79-2K-02 (14pp)

9 **"Programmable Appliance/Outlet Controller using the S2000/2150"**
(S2000/2150)
Discusses hardware and software considerations for designing a programmable timer based on the S2000/2150 microprocessor interfacing with an LED display and keypad.
American Microsystems AN-79-2K-14 (3pp)

Applications (cont)

10 **"Programmable Industrial Controller"**
(Programmable Industrial Controller)
Presents the DCT11-AA single-chip microprocessor in 8-bit mode applied to driving an inexpensive, user-friendly programmable industrial controller.
Digital Equipment Corp. (4pp)

11 **"S2000 Software Seconds Timing and Display"**
(S2000)
Gives introductory software program demonstrating use of instructions and programming techniques for controlling LED time display.
American Microsystems AN-79-2K-07 (3pp)

12 **"S2000 Software—Touch Control Keyboard Scan and Display Output"**
(S2000)
Describes the display and keyboard scan subroutines for a typical display output program.
American Microsystems AN792K06 (6pp)

13 **"S9900 Simplifies Design of Bidirectional I/O Module"**
(S9900)
Demonstrates a bidirectional I/O module built by incorporating standard addressing and multiplexing logic with the device.
American Microsystems AN-79-99-01 (2pp)

14 **"Serial I/O and Math Utilities for the 8049 Microcomputer"**
(8049)
Provides several program modules which illustrate the increased capabilities of the device over initial members of the family. Modules cover full duplex serial I/O, binary multiply and divide, and binary to BCD and BCD to binary conversions.
Intel AP-49 (22pp)

15 **"Simplify CRT Terminal Design with the DP8350"**
(DP8350)
Describes a low-cost CRT data terminal design based on the DP8350 CRT controller and SC/MP microprocessor. Features screen scroll, RS-232C interface, and adjustable band rate. Includes schematics, flowcharts, and PC board layout.
National Interface Databook AN-198 (10pp)

16 **"Single-Chip Microprocessor DCT11-AA (8-Bit Mode)"**
(DCT11-AA)
The DCT11-AA provides a choice of multiple hardware operating modes. This note outlines its use in a dynamic 8-bit mode, which reduces overall system cost and simplifies integration into designs using commercially available 8-bit peripheral devices.
Digital Equipment Corp. (9pp)

17 **"Soft Scrolling with the CRT5037 VTAC"**
(CRT5037)
Describes method of performing "soft scroll" with the CRT5037.
Standard Microsystems AN1-3 (4pp)

MICROPROCESSOR

Applications (cont)

1 **"Special Considerations in Using the MC6801 Interrupt Capabilities"**
(MC6801)
Reviews MC6801 interrupt operation and discusses important interrupt design constraints.
Motorola Semiconductor AN-807 (11pp)

2 **"Speech Recognition"**
(DCT11-AA)
Describes a minimal speech recognition system, for demonstration purposes, built around the DCT11-AA.
Digital Equipment Corp. (3pp)

3 **"TMS1000 Series Preprogrammed and Standard Devices"**
(TMS1000)
Presents ten different uses of the TMS1000 4-bit microcomputer family in applications ranging from appliance controller to sound generator.
Texas Instruments Application Report MP059 (18pp)

4 **"TMS9900 CRT Controller"**
(TMS9900)
Analyzes a CRT controller system that employs a TMS9900 microprocessor. Contains diagrams of the system and a software monitor routine.
Texas Instruments Application Report MOSA6 (32pp)

5 **"The CRT5027/37/57: Video Timer-Controller"**
(CRT5027, CRT5037, CRT5057)
Characterizes the device and explains how to program it. Provides examples for systems with 80 characters by 24 rows and 40 characters by 12 rows. Schematics and system block diagrams are included.
Standard Microsystems AN-1-1 (18pp)

6 **"The IMP-16 in Communication Applications"**
(IMP-16)
Discusses communication processor functions, requirements for communications microprocessors and system considerations. Gives programming examples including status monitoring, data transmission, message routing, interrupt handling and error control.
National AN-134 (6pp)

7 **"The IMP-8C as a Data Concentrator"**
(IMP-8C)
Describes the use of this microprocessor in data concentrator applications. Covers use with a full duplex modem, and the terminal controller interface.
National AN-113 (6pp)

8 **"The Z-FIO in a Data Acquisition Application"**
(Z8038)
Illustrates the use of an intelligent 128x8 FIFO buffer in a simple data acquisition application. The device allows the CPU to handle data in blocks rather than requiring it to service an interrupt every 100 TRANSLATION ERRORs.
Zilog (8pp)

9 **"Using the 8202 Dynamic RAM Controller"**
(8202, 8085A, 8086)
Describes the device in detail and illustrates its use. Covers functionality, interfacing, decoupling, and speed selection of memory array. Provides 8085A application examples and an interconnect of the 8086 max mode system with 128K bytes of dynamic RAM.
Intel AP-45 (25pp)

Applications (cont)

10 **"Using the 8295 Printer Controller"**
(8295)
Describes device which interfaces microprocessors to the LRC 7040 series of dot matrix impact printers. Provides software and schematics for various interface schemes.
Intel AP-54 (31pp)

11 **"Using the CRT5027 VTAC for Double Height Characters"**
(CRT5027)
Outlines procedures for obtaining double height characters using the device and a 32 x 8 PROM. Circuit diagram and program for both the device and PROM included.
Standard Microsystems AN1-2 (2pp)

12 **"Using the MC68000 and the MC6845 for a Color Graphics System"**
(MC68000, MC6845)
Describes a state-of-the-art color graphics system using the MC68000 16-bit MPU and the MC6845 CRT controller. Includes circuit diagrams and software.
Motorola AN-834 (18pp)

13 **"Vacuum Fluorescent Display Driven by TMS9940"**
(TMS9940)
Describes how the TMS9940 single-chip microcomputer makes an efficient, low-cost controller for multi-character fluorescent displays.
Texas Instruments Applications Report MP717 (28pp)

14 **"Versatile Thermostat Using CMOS MC146805E2 MPU"**
(MC146805E2)
Describes the design and operation of a dual-setback electronic thermostat using an MC146805E2 microprocessor. Includes schematics, block diagrams and flow charts.
Motorola Semiconductor AN-855 (20pp)

15 **"Video Terminal Interface Design Using TMS9927 Controller/Timer"**
(TMS9927)
Describes a terminal interface design for connecting a TM990 microcomputer module with a keyboard and an RS Video Monitor to form a complete stand alone terminal.
Texas Instruments Application Report MP024 (48pp)

16 **"μPD765 Single/Double Density Floppy Disk Controller"**
(μPD765)
Presents a complete floppy disk controller design incorporating the device. Allows DMA or non-DMA operation. Includes block diagram and timing diagrams.
NEC AN-8 (32pp)

General

17 **"16-Bit Operations in the CDP1802 Microprocessor"**
(CDP1802)
Describes various software routines and a few interface circuits that can be used to manipulate full 16-bit values in the CDP1802.
RCA ICAN-6842 (6pp)

18 **"28000 vs 6800 Register Architecture"**
(Z8000)
Examines the difference between the Z8000 and 6800 register architectures on the basis of general-purpose vs special-purpose registers, pairing vs telescoping of subregisters and register-set extensibility.
Zilog (5pp)

MICROPROCESSOR

General (cont)

1 **"A Comparison of Microcomputer Units: Benchmark Report"**
(Z8611, 8051, MC6801)
Compares the Zilog Z8611, Intel 8051, and Motorola MC6801 microcomputers in terms of functions and features.
Zilog Microprocessor Applications Reference Book 1-15 (13pp)

2 **"A Logical Tester for the R6500/1 One-Chip Microcomputer"**
(R6500/1)
Explains a method of implementing a logical tester for the R6500/1 single-chip microcomputer. The device tests each instruction in every implemented addressing mode of the CPU, I/O port, interrupts, counter-timer, RAM, and ROM.
Rockwell No. 258 (40pp)

"A Non-Volatile Microprocessor Memory Using 4K N-Channel MOS RAMS"
See listing under (Memory) RAMS (Motorola)

3 **"An Introduction to Microprocessors and the RCA COSMAC COS/MOS Microprocessor"**
(COSMAC)
Provides an introduction to the fundamentals of microprocessors and to the specific capabilities of the RCA COSMAC microprocessor.
RCA ICAN-6416 (8pp)

4 **"CDP1804 and CDP1805 Processors Improve System Performance and Lower Chip Count"**
(CDP1804AC, CDP1805AC)
Describes the architecture and outlines the capabilities of the CDP1804/5 8-bit CMOS microprocessors. Hardware and software support for the CDP1800 Series is also discussed.
RCA ICAN-6957 (6pp)

5 **"Comparison Study NSC800 vs 8085, Z80"**
(NSC800)
Compares the NSC800, 8085 and Z80 MPUs on the basis of critical selection factors, including speed, bus structure, architecture, instruction sets and I/O requirements.
National Semiconductor uB 3 (3pp)

6 **"Comparison of CRT Controllers"**
(SND5027, SND5037, SND8002)
After categorizing the types of CRT controllers available today, this note then compares the SND5027/5037 controller chip set to the Motorola 6845 and 6847, the Intel 8275, and the National Semiconductor 8350 in terms of functions and programmable features.
Solid State Scientific AN-305 (6pp)

7 **"Cost Effective Memory Selection for Z8000 CPUs"**
(Z8000)
Many factors enter into the selection of a CPU and memory characteristics for a given application. This note examines a simple formula that relates these factors to each other and provides examples of the formula applied in common situations.
Zilog (5pp)

General (cont)

8 **"Error Detection and Correction Using SN54/74ALS632 through SN54/74ALS635"**
(SN54ALS632, SN54ALS633, SN54ALS634, SN54ALS635, SN74ALS632, SN74ALS633, SN74ALS634, SN74ALS635)
Discusses error detection and correction in 32-bit systems. Other areas covered are byte-write, diagnostics, and applications in 16-bit systems.
Texas Instruments AR-SDAA001 (7pp)

9 **"Fast Block Moves with the Z8000 CPU"**
(Z8000)
Shows how to use two different mechanisms in Z8000 CPUs to accomplish memory-to-memory transfers at speeds usually associated with DMA equipment. The performance of the mechanisms is compared for both short and long block moves.
Zilog (2pp)

10 **"Initializing the Z8001 CPU for Segmented Operation with the Z8010 MMU"**
(Z8001, Z8010)
Explaines how a Z8001 CPU with at least one Z8010 memory management unit attached is initialized for segmented operation. Also describes the specification of the initial CPU status to be established in response to RESET, the execution of the first program out of unmapped memory, and the initialization of the first MMU.
Zilog (6pp)

11 **"Interfacing the SND8002 Attributes Controller and Video Generator with the 8275 CRT Controller"**
(SND8002)
Describes techniques for interfacing the SND8002 with an Intel 8275 CRT controller.
Solid State Scientific AN-310 (4pp)

12 **"Interfacing the SND8002 Attributes Controller and Video Generator with the MC6845/SY6545 CRT Controller"**
(SND8002)
Details the specifics to be considered when interfacing an SND8002 character generator and attributes controller with such CRT controllers as the Synertek SY6545 and Motorola MC6845.
Solid State Scientific AN-309 (4pp)

13 **"Keyless Entry System Using an MC146805F2 8-Bit Microcomputer Unit"**
(MC146805F2)
Describes a keyless entry system in which a dedicated MC146805F2 MCU is used to execute a program that can control a larger configuration to form a secure entry system. Intended only as an aid in better understanding the MC146805F2 and how it fits into a secure entry system.
Motorola Semiconductor AN-863 (10pp)

14 **"Low Power Considerations for MC146818 Real Time Clock Applications"**
(MC146818)
Provides information on the use of a 32-kHz oscillator and battery-backup with the MC146818 real-time clock.
Motorola Semiconductor AN-856 (4pp)

15 **"Memory Mapping Using SN54/74LS610 through SN54/74LS613"**
(SN54LS610, SN54LS611, SN54LS612, SN54LS613, SN74LS610, SN74LS611, SN74LS612, SN74LS613)
Discusses memory mapping philosophy and implementation using the LS610 Series devices.
Texas Instruments AR-SCA-205 (16pp)

© IC MASTER 1984

MICROPROCESSOR

General (cont)

1 **"New CDP1805 Microprocessor Upgrades CDP1800-Based Systems"**
(CDP1805AC)
The basic architecture of the CDP1806 is first described, followed by details on performance improvements, including enhanced hardware DMA and interrupt control, and an expanded instruction set.
RCA ICAN-7009 (6pp)

2 **"New CMOS CDP1800 Series Processors Enhance System Performance"**
Reviews the features and advantages of the CDP1800 Series of CMOS microprocessors.
RCA ICAN-6971 (6pp)

3 **"Real-Time Interrupts Using the CDP1804A/5A/6A CMOS Microprocessors"**
(CDP1804A, CDP1805A, CDP1806A)
Explains the theory of real-time interrupt-driven software and gives two sample programs for implementation on the 1804A/5A/6A CMOS microprocessors: one for generating a once-per-second tick rate and 24-hour time; and one for selecting timer-counter coefficients and calculating inherent error.
RCA ICAN-7144 (4pp)

4 **"S6802 Microprocessor Crystal Specification"**
(S6802)
Explains method for specifying the oscillator crystal for the S6802 microprocessor.
American Microsystems AN796803 (1pp)

5 **"S68045 Compared with Motorola MC6845"**
(S68045)
Describes the fundamental difference between the two devices.
American Microsystems

6 **"S9900 Technical Article Reprints"**
(S9900)
A Compilation of six articles covering: a comparison of the 9900, Z8000 and 8086; a real-time control software design using the 9900; a multiprocessor system design using the 9900; and using the 9940 to implement the NBS data encryption standard.
American Microsystems

7 **"Soft Scrolling with the SND5037"**
(SND5037)
Explains how to soft scroll with the SND5037. Circuit diagrams, flow charts and timing charts are included.
Solid State Scientific AN-306 (2pp)

8 **"Software Comparison NSC800 vs 8085, Z80"**
(NSC800)
Compares the instruction sets of the NSC800, 8085 and Z80.
National Semiconductor uB4 (3pp)

General (cont)

9 **"The Advanced Architectural Features of the Z8 Microcomputer"**
(Z8)
Gives an architectural overview of the Z8 including memory space, register organization, I/O and interrupt structures, counter/timers, and instruction set. Sample application describes a graphics computing system built around the Z8.
Zilog Microprocessor Applications Reference Book 1-3 (12pp)

10 **"The MC6809/MC6809E Sync Instruction"**
(MC6809, MC6809E)
In many applications external interrupts are used to synchronize a microprocessor to external events. However, the latent period required for stacking operations prior to the interrupt routine is often too long. This note describes a solution to this problem by using the SYNC instruction of the MC6809.
Motorola Semiconductor AN-865 (4pp)

11 **"Using the SND5037 for a 512 x 512 Dot Matrix Graphic Display"**
(GND5037)
Offers details on the basic operation of the SND5037 video timer/controller, along with programming methods. Sample programming and register loading worksheets are provided.
Solid State Scientific AN-307 (5pp)

12 **"Vectoring by Device Using Interrupt Sync Acknowledge with the MC6809/MC6809E"**
(MC6809, MC6809E)
Describes a circuit in which the interrupting device provides all or part of the vector address, thus eliminating the often lengthy time required to poll various devices to determine which peripheral is requesting services.
Motorola Semiconductor AN-866 (6pp)

13 **"Z80 Designers Guide"**
(Z80-SIO, MK3805, MK3807)
Includes general information, technical manuals on the Z80 and MDL families, and several Z80 microcomputer application notes.
Mostek Z80 Designers Guide (464pp) $10.00

14 **"Z8000 vs. 68000: the Address/Data Bus"**
(Z8000, 68000)
The Z8000 time multiplexes one set of lines for address and data, while the 68000 uses two separate sets of lines. This note considers the tradeoffs of the two approaches.
Zilog Microprocessor Applications Reference Book 3-63 (1p)

15 **"Z8070 Arithmetic Processing Unit (APU)"**
(Z8070)
Describes the Z8070, an extended processing unit designed to perform floating-point arithmetic functions while operating in parallel with a CPU.
Zilog (3pp)

16 **"Z8600 Interrupt Request Register"**
(Z8600)
Describes the interrupt request register of the Z8600, and explains how to avoid undesirable interrupt requests after the interrupt system is enabled.
Zilog Microprocessor Applications Reference Book 1-29 (1p)

MICROPROCESSOR

I/O

1 **"Add Serial Communication Capability to the 8086/8088 Family Using the Z80-SIO"**
(MK3884, MK3885, MK3887)
Explains how the Z80-SIO (MK3884/5/7), a dual full-duplex USART device, can be adapted to the 8086, 8088, and other microprocessors. Includes a schematic for an 8086 minimum system and a sample subroutine.
Mostek 1982/83 Z80 Designers Guide V-1 (5pp)

2 **"An IEEE-488 Bus Interface Using DMA"**
(MC6809, MC68488, MC6844)
Provides information about using the MC6809 processor to form a Talker/Listener IEEE-488 System. Discusses hardware and software considerations of system implementation, and includes a review of data transfer operation, the GPIB, and direct memory access techniques.
Motorola Semiconductor AN-831 (22pp)

3 **"Application Prototype Board (APB) for MC6801/MC6803/MC68701 MCUs"**
(MC6801, MC6803, MC68701)
Describes the design and fabrication of an application prototype board for evaluating single-chip microcomputers in the MC6801 family. Includes a parts list and artwork needed to generate the p-c board.
Motorola AN799A (12pp)

4 **"Asynchronous Communications for the MC68000 Using the MC6850"**
(MC68000, MC6850)
Discusses operation of an asynchronous communications interface adapter and interconnection requirements for use with the MC68000 microprocessor.
Motorola Semiconductor AN-817 (4pp)

5 **"Color Graphics for the MC68000 Using the MC6847"**
(MC68000, MC6848)
Illustrates how to use a video display generator to provide a video signal to a color or B/W television receiver in a microprocessor-based system.
Motorola Semiconductor AN-815 (3pp)

6 **"Connecting an EF6800 Family Peripheral to the 8085 Bus"**
(EF6800)
Explains how to derive the control signals required by the EF6800 family of peripheral ICs from 8085 control signals.
Thomson CSF Components NA-017A (11pp)

7 **"Designing Low Power 12-Bit Microprocessor Systems"**
(IM6100)
Examines selection considerations for CMOS microprocessors. Discussion includes power consumption, word length, architecture, I/O structure and throughput.
Intersil Application Bulletin M009 (4pp)

8 **"Dual 16-Bit Ports for the MC68000 Using Two MC6821s"**
(MC68000, MC6821)
The MC6821 peripheral interface adapter is a 40-pin device having two 8-bit ports. Each port has its own control register and may be configured as input or output on a bit-by-bit basis. Two PIAs may be configured on the MC68000 microprocessor bus to give two 16-bit ports.
Motorola Semiconductor AN-810 (6pp)

I/O (cont)

9 **"Dual-Ported RAM for the MC68000 Microprocessor"**
(MC68000, MCM68B10)
Discusses the use of dual-ported RAMs to provide a means for multiprocessor systems to exchange data without directly interfering with each other. Includes hardware considerations, schematic diagrams, and test programs.
Motorola Semiconductor AN-881 (9pp)

10 **"Expanding 48-Series Program Space in 4K Byte Increments"**
(INS8048)
Reviews the external memory interface for the 48-Series microcomputers and shows how to use external ICs for paging control of add-on memory.
National AN254

11 **"General Application Principles for EF4440 (ILA) and EF4442 (RTA)"**
(EF4440, EF4442)
Describes the procedures for exchanging data between a microprocessor and the EF4440/2 ARINC 429 circuits.
Thomson CSF Components NA018-A (12pp)

12 **"Hardware Considerations for Direct Memory Access Using the MC6809 Microprocessor Unit and MC6844 DMA Controller"**
(MC6809, MC6844)
Discusses hardware considerations regarding DMA in systems using the MC6809 microprocessor, with emphasis on DMA dead-state protection.
Motorola Semiconductor AN-820 (5pp)

13 **"Increasing Throughput for IMP-16 Serial Input/Output"**
(MM5303)
Describes use of device to improve communication between microprocessor and peripheral with little increase in component count.
National AN-160 (7pp)

14 **"Interfacing EF9365, EF9366, and EF9367 Graphic Display Processors to Z80A, 8085A, 6502 and 2650A-1 Microprocessors"**
(EF9365, EF9366, EF9367)
Gives timing and special requirements for interfacing these graphic display processors to various microprocessors.
Thomson CSF Components NA-032A (13pp)

15 **"Interfacing Higher-Speed R6502s to Low-Speed I/O and Memory"**
(R6502)
Although the 2-MHz and 3-MHz R6502 CPUs can be used to build high-performance microcomputer systems, memory and I/O devices able to operate at these speeds are either costly or unavailable. This note discusses three methods of interfacing an R6502 to slower peripheral devices.
Rockwell No. 296 (3pp)

16 **"Interfacing Microprocessors and Microcomputers with HI5712 High Performance Analog-to-Digital Converter"**
(HI5712)
Discusses use of the HI5712 A/D converter in conjunction with various microprocessors.
Harris Semiconductor AN-528 (6pp)

17 **"Interfacing Multiplexed Bus Peripherals with Non-Multiplexed MPUs"**
(MC6800, MC6809, MC146818, MC146823)
Discusses methods for providing an interface between non-multiplexed bus MPUs and multiplexed bus peripherals.
Motorola Semiconductor AN-864 (4pp)

© IC MASTER 1984

MICROPROCESSOR

I/O (cont)

1 **"Interfacing the MC68000 to the MC6846 RIOT"**
(MC68000, MC6846)
The MC6846 ROM I/O Timer provides several versatile functions that the MC68000 can readily use. This note discusses effectively interfacing the ROM in the RIOT to the MC68000, using a 16-bit data bus.
Motorola Semiconductor AN-809 (8pp)

2 **"Interfacing the Z-BUS Peripherals to the 8086/8088"**
(Z8030, Z8036, Z8038)
Discusses a general design that enables the 8086/8088 processors to interface with the Z-Bus peripherals.
Zilog (8pp)

3 **"Interfacing the Z8500 Peripherals to the 68000"**
(Z8500)
This note discusses the Z8500/Z6800 interfaces and presents hardware examples and verification techniques.
Zilog (12pp)

4 **"Interlaced Video Displays Utilize Low Cost CRT Controllers"**
Discusses the design of interlaced raster scan CRT displays that refresh at half the usual rate and thus require less expensive components.
Standard Microsystems AR1-5 (6pp)

5 **"MC68000 DMA Using the MC6844 DMA Controller"**
(MC68000, MC6844)
Describes designs for meeting requirements of interfacing the MC6844 DMA controller to the MC68000 microprocessor to provide flexible DMA control in an MC68000-based system.
Motorola Semiconductor AN-824A (8pp)

6 **"Microprocessor Interface Methods for High-Speed Data Acquisition Systems"**
(HI5900, HI5712)
Describes system configurations and operation of high-speed data acquisition systems using the HI5900 analog signal processor and the HI5712 12-bit A/D converter.
Harris Semiconductor AN-529 (3pp)

7 **"Microprocessor-Compatible DACs and the MC6890"**
(MC6890)
A microprocessor-compatible DAC requires latches on the digital input lines and an enable input. The MC6890 microprocessor-compatible DAC meets these requirements by incorporating two input latches and a latched enable signal. This note discusses DAC theory, specific interface examples with several microprocessors, and sample applications.
Motorola Semiconductor AN-842 (32pp)

8 **"Microprocessors—An Introduction"**
Shows system components, defines terms and describes operation of an elementary computer system.
National AN-114 (4pp)

9 **"Printer Control with the R6522 Versatile Interface Adapter (VIA)"**
(R6522)
Describes how a dot matrix printer mechanism can be interfaced to an AIM 65 microcomputer using an on-board VIA to control all printer functions.
Rockwell No. 256 (22pp)

I/O (cont)

10 **"Prioritized Individually Vectored Interrupts for Multiple Peripheral Systems with the MC68000"**
(MC68000)
Reviews MC68000 interrupt structure and discusses circuits comprised of standard TTL parts for generating interrupt vector numbers.
Motorola Semiconductor AN-819 (6pp)

11 **"R6551 Asynchronous Communications Interface Adapter (ACIA)"**
(R6551)
Details the operation, interface requirements, and diagnostic operating modes of the R6551 ACIA, a program-controlled interface between 8-bit microprocessor-based systems and serial communications data sets and modems.
Rockwell No. R6551 (19pp)

12 **"RS-232C Interface for AIM 65"**
(R6500)
Two low-cost methods are described for allowing the AIM 65 to communicate with CRTs and printer terminals having a standard RS-232C serial channel.
Rockwell No. 230 (1p)

13 **"Synchronous I/O for the MC68000 Using the MC6852"**
(MC68000, MC6852)
Describes operation and interface requirements of a synchronous serial data adapter for use with the MC68000 microprocessor.
Motorola Semiconductor AN-818 (5pp)

14 **"System 65 Bus Interfacing"**
(R6500)
This note aids users designing their own modules for the System 65 bus. Descriptions of bus signals, drive capabilities, loading, and timing are included.
Rockwell No. 240 (4pp)

15 **"The MC68230 Parallel Interface/Timer Provides an Effective Printer Interface"**
(MC68230, MC68000)
This application note describes a parallel interface/timer interfaced with a Printronix Model 300 printer using the industry-standard Centronics interface.
Motorola Semiconductor AN-854 (6pp)

16 **"The Video Display Generator as a Color Television Interface"**
(MC6847, MC1372)
Describes two ICs that convert a television display into an active, intelligent terminal when used with an MPU, some memory devices and about a dozen passive discrete components.
Motorola Semiconductor AN-822 (18pp)

17 **"Understanding the CDP1851 Programmable I/O"**
(CDP1851)
Outlines the operating and interrupt modes and the timing requirements of the CDP1851 general-purpose programmable I/O device. Two sample applications are included.
RCA ICAN-7063 (6pp)

18 **"Understanding the CDP1851 Programmable I/O"**
(CDP1851)
Discusses the various operating modes of the CDP1851 general-purpose, programmable I/O device.
RCA ICAN-7063 (6pp)

ADVERTISERS INDEX

Advanced Micro Devices
Digital 701-703
Microprocessor 1401-1446
Microprocessor Development Systems 1901
Microcomputer Boards 2001-2005
Interface 2801-2808
Linear 3301-3338
Memory 3901-3930
Custom/Semicustom 4600-4613
American Automation
Microprocessor Development Systems 1902
American Microsystems, Inc.
Digital 705
Microprocessor 1448-1453
Interface 2810-2814
Linear 3339-3349
Memory 3932-3936
Custom/Semicustom 4614-4625
Analog Devices
Digital 706, 707
Interface 2816-2847
Linear 3350-3363
Arrow Electronics, Inc. 4952
Barvon Research, Inc. 4626, 4627
Burr-Brown Corp.
Interface 2848-2853
Citel
Custom/Semicustom 4628, 4629
Cromemco, Inc.
Microcomputer Boards 2006-2037
Custom MOS Arrays, Inc.
Custom/Semicustom 4630-4633
Datel
Microcomputer Boards 2039
Interface 2855-2865
Diplomat Electronics Corp.
Manufacturers and Distributors Directory
Emulogic
Microprocessor Development Systems 1904, 1905
Exar Integrated Systems, Inc.
Linear 3365-3391
Fairchild
Digital 708-776
Microprocessor 1454-1471
Microprocessor Development Systems 1906-1912
Custom/Semicustom 4634-4635
Fujitsu America, Inc.
Memory 3938-3941
Fujitsu Microelectronics, Inc.
Custom/Semicustom 4637-4642
Harris Semiconductor
Microprocessor 1472-1499
Interface 2866-2980
Linear 3392-3471
Memory 3943-3969
Custom/Semicustom 4644-4744

Hitachi America, Ltd.
Memory 3970-3975
Holt, Inc.
Custom/Semicustom 4745
Hybrid Systems Corp.
Interface 2981-2986
Immos Corp.
Military 501
Microprocessor Development Systems 1913
Memory 3977-3981
Integrated Device Technology, Inc.
Memory 3982-4019
Intel Corp.
Memory 4021-4025
Interdesign, Inc.
Custom/Semicustom 4746
International Microcircuits, Inc.
Custom/Semicustom 4747
International Microelectronic Products
Custom/Semicustom 4749
Intersil Corporation
Application Notes 350, 351
Digital 778-802
Microprocessor 1500
Interface 2988-3041
Linear 3472-3528
Custom/Semicustom 4751-4759
LSI Computer Systems, Inc.
Digital 803
Custom/Semicustom 4761
LSI Logic Corp.
Custom/Semicustom 4762, 4763
Micrel
Custom/Semicustom 4765
Micro Networks
Interface 3042-3045
Micro Power Systems
Military 503
Interface 3046, 3047
Linear 3529
Custom/Semicustom 4766, 4767
Mitel Semiconductor
Interface 3048-3059
Monolithic Memories, Inc.
Digital 804-819
Memory 4026-4045
Custom/Semicustom 4768-4795
Motorola Semiconductor
Digital 820-824
Microprocessor 1501-1512
Microprocessor Development Systems 1914-1925
Microcomputer Boards 2040-2046
Interface 3060-3070
Linear 3530-3536
Memory 4046-4056
Custom/Semicustom 4796, 4797
National Semiconductor
Military 504-507
Microprocessor 1513-1529
Microprocessor Development Systems 1926-1929
Microcomputer Boards 2047-2051
Linear 3537-3541
Memory 4057-4071
NEC Electronics
Microprocessor 1531-1586
Linear 3543-3555
Memory 4073-4117
Custom/Semicustom 4799-4813
OKI Semiconductor
Memory 4118, 4119
Oliver Advanced Engineering, Inc.
PROM Programmers 4401
Panasonic
Digital 826-835
Microprocessor 1587-1589
Linear 3556-3559
Memory 4120-4129
Plessey Semiconductors
Interface 3071-3075
Linear 3561-3564
Custom/Semicustom 4815-4821
Precision Monolithics, Inc.
Linear 3565-3574
Raytheon Co.
Military 508, 509
Linear 3576-3592
Memory 4130-4132
Custom/Semicustom 4822, 4823
RCA
Military 510-512
Digital 836-843
Microprocessor 1590-1595
Linear 3593-3604
Custom/Semicustom 4824, 4825
Schweber Electronics 404, 2300, 4404
SEEQ Technology, Inc.
Military 513-519
Microprocessor 1597-1606
Memory 4133-4139
Semi Processes, Inc.
Digital 844-856
Custom/Semicustom 4826
Si-Fab Corp.
Custom/Semicustom 4827
Signetics Corp.
Military 521-534
Digital 857-913
Microprocessor 1607-1695
Microprocessor Development Systems 1930
Microcomputer Boards 2052, 2053
Linear 3605-3684
Memory 4141-4207
Custom/Semicustom 4829-4871
Silicon Systems, Inc.
Linear 3685
Memory 4208
Custom/Semicustom 4872
Siliconix, Inc.
Interface 3077-3086
Sprague Electric Co.
Interface 3087-3089
Structured Design, Inc.
PROM Programmers 4402
Sunrise Electronics, Inc.
PROM Programmers 4403
Synertek, Inc.
Military 535
Microprocessors 1696, 1697
Memory 4210-4211
Custom/Semicustom 4873-4875
Teledyne Semiconductor
Interface 3091-3101
Telmos, Inc.
Custom/Semicustom 4877
Texas Instruments
Application Notes 352-403
Military 536-546
Digital 915-1158
Microprocessor 1698-1719
Microprocessor Development Systems 1931
Microcomputer Boards 2055-2057
Interface 3103-3108
Linear 3687-3701
Memory 4212-4248
Custom/Semicustom 4878-4929
TRW LSI Products
Digital 1159-1170
Linear 3702-3707
Unitrode Corporation
Linear 3709-3711
Universal Semiconductors, Inc.
Custom/Semicustom 4930
VLSI Technology, Inc.
Memory 4249-4258
Custom/Semicustom 4931-4936
Western Digital Corp.
Digital 1172-1175
Microprocessor 1720-1735
Microcomputer Boards 2058-2061
Interface 3109-3112
Memory 4260-4263
Wintek Corporation
Microcomputer Boards 2062
Xicor, Inc.
Military 547
Memory 4265-4269
Zilog, Inc.
Microprocessor 1737-1760

MICROPROCESSOR

I/O (cont)

1 **"Use of the CDP1852 8-Bit I/O Port with RCA Microprocessor Evaluation Kit CDP18S020"**
(CDP1852)
Describes several applications of the CDP1852 I/O Port and specifically explains its use in the CDP18S020 Evaluation Kit.
RCA ICAN-6538 (4pp)

2 **"Use of the CDP1854 UART with RCA Microprocessor Evaluation Kit CDP18S020 or EK/Assembler-Editor Design Kit CDP18S024"**
(CDP1854)
Describes several methods of interfacing the CDP1854 with the CDP1802 microprocessor and specifically explains the use of the CDP1854 in the CDP18S020 and CDP18S024 Kits.
(CDP1854)
RCA ICAN-6632 (6pp)

3 **"Using High-Speed CMOS Logic for Microprocessor Interfacing"**
(MC54HC240, MC54HC241, MC54HC242, MC54HC243, MC54HC244, MC54HC245)
Explores the possibility of using high-speed CMOS devices in microprocessor systems where LSTTL, because of its speed, has generally been used. Includes a discussion of the digital logic needs of a microprocessor system.
Motorola Semiconductor AN-868 (18pp)

4 **"Using R65XX Family Peripheral Devices with the Z80 CPU"**
(R6522, R6545, R6520, R6551)
Presents one approach to interfacing the Z80 bus to the R6522 Versatile Interface Adapter, R6545 CRT Controller, R6520 Peripheral Interface Adapter, and R6551 ACTA.
Rockwell No. 287 (4pp)

5 **"Using the CRT5037 VTAC for a 512 x 512 Dot Matrix"**
(CRT5037)
Describes the design of dot-graphic terminals using CRT controllers. Includes a detailed example of a 512 x 512 dot graphic terminal.
Standard Microsystems AN1-4 (8pp)

6 **"Using the MP8418 Microcomputer Analog I/O System"**
(MP8418)
Discusses theory and application of a board-level data acquisition system that interfaces with the Intel Multibus. Includes troubleshooting software for system checking.
Burr-Brown AN-95 (12pp)

7 **"Using the Z89 SIO in Asynchronous Communications"**
(Z80-SIO)
Describes the use of the Z80-SIO controller in asynchronous communications in both polled and interrupt environments. Software requirements and with sample programs are given.
Zilog Microprocessor Applications Reference Book 2-47 (23pp)

"Z80 Interfacing Techniques for Dynamic RAM"
(See listing under (Memory) RAMs. (Mostek)

8 **"Z80 Interfacing Techniques for Dynamic RAM"**
(MK4027, MK4116)
Provides examples of ways to interface 16-pin dynamic RAMs to the Z80. Z80 timing and memory control signals, as well as interface circuits, are also described.
Mostek 1982/83 Z80 Designers Guide V-7 (16pp)

I/O (cont)

"Z8000 Memory Interfacing Techniques"
(See listing under (Memory) RAMs. (Mostek)

Programming

9 **"12-Bit Addressing with the Z8600 Series Family"**
(Z8600)
Shows how to use 12-bit addressing to manipulate data in the internal program memory, external program memory and the external data memory of a Z8600-based system.
Zilog (2pp)

10 **"8080/8085 Assembly Language Programming Manual"**
(8080A, 8085A)
Primarily a reference manual, this manual describes the 8080/8085 instruction set, assembly language concepts, assembler directives, macros, programming techniques and interrupts.
Intel $10.00 (210pp)

11 **"A Methodology for Programming COSMAC 1802 Applications Using Higher-Level Languages"**
(COSMAC 1802)
Discusses a method for optimizing time-critical portions of programs written in higher-level languages for COSMAC 1802 applications by recoding those portions in assembly language.
RCA ICAN-6918 (4pp)

12 **"A Microprogram Development System"**
(IMP-16)
Describes the application of microprogramming to LSI processors and the advantages of a microprogram development system for hardware and software.
National AN-123 (6pp)

13 **"AIM 65 Program Timer"**
(R6500)
As an alternative to counting instruction cycle times in a program, this note presents a routine that will measure the execution time of a program up to 65,535 microseconds long.
Rockwell No. 274 (4pp)

14 **"An Introduction to RIO Text Processing"**
Presents for the beginning microcomputer user an introductory overview of the fundamentals of Relocatable Modules and Input/Output Management.
Zilog AN1 (24pp)

15 **"Binary Synchronous Communication Using the Z80 SIO"**
(Z80)
Discusses design considerations for using the Z80 SIO for implementing communication protocol for information exchange between data-processing devices.
Zilog Microprocessor Applications Reference Book 2-83 (4pp)

16 **"CBUG05 Debug Monitor Program for MC146805E2 Microprocessor Unit"**
(MC146805E2, MCM65516)
CBUG05 is a debug monitor program written for the MC146805E2 microprocessor unit and contained in the MCM65516 ROM. CBUG05 allows for rapid development and evaluation of hardware and M6805 Family software, using memory and register examine/change commands as well as breakpoint and single instruction trace commands.
Motorola Semiconductor AN-823A (42pp)

© IC MASTER 1984

MICROPROCESSOR

Programming (cont)

1 **"CDP1802 Microprocessor-Based Setback Thermostat"**
(CDP1802)
Covers the design of a programmable, setback thermostat circuit for controlling heating and air-conditioning systems.
RCA ICAN-6901 (7pp)

2 **"COSMAC Software Development Program on GE Mark III Time Sharing System"**
(CDP 1802)
Describes the COSMAC Software Development Packages (CSDP) available for the GE Mark III time sharing system. Briefly covers the assembler and the simulator debugger which make up the package.
RCA ICAN-6656 (4pp)

3 **"Chaining the Execution of Disk Resident Basic-M Program Overlays"**
(XDOS)
Describes a way to implement a "chain" instruction using the XDOS, COMND system call.
Motorola Semiconductor AN-812 (6pp)

4 **"HM-6100 Microprocessor Basic 4K Software"**
(HM6100)
Describes the Digital Equipment Corp. PDP-8 software.
Harris Semiconductor AN-HM003 (4pp)

5 **"HM-6100 ROM Based Subroutine Calls"**
(HM6100)
Describes two methods for returning to the proper program location after executing a subroutine.
Harris Semiconductor AN-HM008 (4pp)

6 **"How To Use Fortran with Other Intel Languages"**
Shows how to link together program modules comprised of Fortran, PL/M and assembly language; example application is included.
Intel AP-44 (22pp)

7 **"IMP-16 Programming Techniques"**
(IMP-16)
Discusses several aspects of the instruction set to enable programmer to code more efficiently. Includes discussion of subroutines, subroute parameter passing, recursive subroutines, as well as sample programs.
National AN-111 (6pp)

8 **"ISIS-II System Calls"**
Discusses how ISIS routines facilitate program generation by providing interface functions such as program I/O, diskette directory maintenance and program loading and execution routines.
Intel AP-80 (20pp)

9 **"Inter-Intellec Communications"**
(Intellec Series II)
Illustrates how to establish a communications link between two Intellec Series II development systems to allow file transfer and increased program development flexibility.
Intel AP-81 (30pp)

10 **"Interfacing 8500 Peripherals to the Z80"**
(Z80)
Describes hardware interface requirements and interrupt structure of 8500 series peripherals in a Z80 system.
Zilog Microprocessor Applications Reference Book 2-97 (5pp)

Programming (cont)

11 **"Interfacing PLM Code to CDOS System Functions"**
Describes an array of PLM procedures and supportive macro definitions for interfacing PLM programs to CDOS system functions; includes example program.
RCA ICAN-6928 (6pp)

12 **"Letting the MC68702 Program Itself"**
(MC68701)
Describes how the MC68701 MCU controls data flow to an on-chip EPROM and gates programming power during programming with the help of only a few external devices.
Motorola Semiconductor AN-832 (8pp)

13 **"M6800 Microprocessor Programming Manual"**
(MC6800)
Provides information needed to program the unit, discusses the instruction set, source language, assembler, simulator, Build-Virtual-Machine and HELP programs. Gives programs examples.
Motorola $10.00 (303pp)

14 **"MC6802/MC6846 with MIKBUG 2.0: A Powerful Software Development Team"**
(MC6802, MC6846)
Presents a hardware system configuration which, when combined with software, provides the user with the means to design, develop, and debug both his system hardware and software. Also summarizes software features and supplies diagrams.
Motorola AN-788 (5pp)

15 **"MC68705P3/R3/U3 8-Bit EPROM Microcomputer Programming Module"**
(MC68705P3, MC68705Rs, MC68705U3)
Contains a schematic diagram and instructions for programming the MC68705P3/R3/U3 EPROM microcomputers. Includes a parts list and parts layout.
Motorola Semiconductor AN-857 (4pp)

16 **"MCS-48 and UPI-41 Assembly Language Manual"**
(8041, 8048, 8741, 8748, MCS-48, UPI-41)
Describes the assembly language for programming the MCS-48 and UPI-41 single device microcomputers. Covers procedures and controls for operating the assemblers to translate the source file into object code.
Intel $10.00 (192pp)

17 **"Memory-Mapped vs Explicit I/O"**
(Z8000)
Compares two approaches to the addressing of microprocessor I/O transactions: the memory-mapped I/O of the 68000 and the explicit I/O scheme of the Z8000.
Zilog Microprocessor Applications Reference Book 3-61 (2pp)

18 **"Microprocessor Interface Software"**
(NC7033)
Describes how to interface the NC7033 MN05 non-volatile memory directly with an 8085 or 8080 microprocessor.
Nitron AN101 (28pp)

MICROPROCESSOR

Programming (cont)

1 **"Microprogramming Handbook"**
(2911, 2909, 29811, 2922, 29803)
Discusses microprogramming a bipolar processor. Includes sections on microprogram memory, sequencing, branching, jumping, and subroutines.
Advanced Micro Devices, $5.00 (44pp)

2 **"PL/M-80 Programming Manual"**
(8080, PL/M-80)
Provides in readable format a complete description of the PL/M language as implemented by the PL/M-80 compiler.
Intel $10.00 (134pp)

3 **"Partitioning a Basic-M Source Program"**
(XDOS)
Describes how to partition a source program into several separately compiled modules that can reside in ROMs in the final environment outlines user-program design constraints and illustrates the assembly routine for calling one module from another.
Motorola Semiconductor AN-813 (6pp)

4 **"Preparing an AIM 65 BASIC Program for PROM/ROM Operation"**
(R6500)
Describes a method of preparing a BASIC program for operation in a (P)ROM in the AIM 65. A program executing address DOOO-DFFF is illustrated, as are relocator and driver support programs.
Rockwell No. 241 (4pp)

5 **"S2000 Software Routines: Keyboard Entry, LED Display, Software Timing and Sound Generation"**
(S2000)
Describes software program that demonstrates capability of the S2000 single-chip MCU.
American Microsystems Inc. (8pp)

6 **"S2000/S2150 Single-Chip Microcomputer Positive BCD Integer Arithmetic Routines"**
(S2000/S2150)
Offers software routines for performing positive BCD integer arithmetic operations with the S2000/S2150 MCU.
American Microsystems Inc. (20pp)

7 **"SC/MP NIBL ROM Hardware Implementation"**
Shows the design of the RAM and ROM memories needed to implement National's Industrial Basic Language on the SC/MP LCDS.
National AN-204 (2pp)

8 **"Segmented vs Linear Addressing"**
(Z8000)
Compares two approaches used for addressing microprocessor memory: the segmented addressing method of the Z8000 and the linear addressing method of the 68000.
Zilog Microprocessor Applications Reference Book 3-65 (9pp)

9 **"Serial Clock Generation Using the Z8536 CIO"**
(Z80, Z8536)
Describes the use of a counter/timer I/O device for generating bit-rate clocks for asynchronous communications in a Z80-based system.
Zilog Microprocessor Applications Reference Book 2-103 (4pp)

Programming (cont)

10 **"Serial Communication with the Z80 DART"**
(Z80, Z8470)
Covers hardware and software considerations for using the Z80 DART, an IC that provides two independently programmable, asynchronous communication channels for a Z80-based system.
Zilog Microprocessor Applications Reference Book 2-87 (9pp)

11 **"Signetics Micro Assembler Reference Manual"**
(N3002, 8X02)
Describes this FORTRAN program developed as a design tool for writing microprograms. This microprogram defines its own assembly language, writes the microprogram, then assembles it to generate tapes to load memory. Program is suitable for most microprogrammed applications.
Signetics $4.00 (74pp)

12 **"Software Control of Microprocessor-Based Realtime Clock"**
(CDP1802)
Shows how to use software to implement a 12-hr clock, 4-yr calendar and a 12-hr elapsed time indicator with a microprocessor-based timing system.
RCA ICAN-6677 (9pp)

13 **"Starplex's "Submit Utility" Speeds Program Development"**
(Starplex)
Illustrates how the Submit utility program increases programming speed and accuracy.
National Semiconductor SB SPX-AP-8 (7pp)

14 **"The Z80 Family Interrupt Structure"**
(Z80)
Describes the Z80 interrupt structure, which includes one non-maskable and three software maskable interrupt modes. Provides flow charts, timing diagrams, and circuit diagrams.
Zilog Microprocessor Applications Reference Book 2-23 (12pp)

15 **"Using the Z80 SIO with SDLC"**
(Z80)
Covers the use of the Z80 SIO with synchronous data-link control communication protocol.
Zilog Microprocessor Applications Reference Book 2-71 (12pp)

16 **"Z8000 CPU Programmers Guide"**
(Z8000)
Demonstrates how the features of the Z8000 can be used to solve typical software problems. Specific programming techniques are offered, and a variety of complete programs are presented.
Zilog (54pp)

17 **"μCOM-4 Cross Assembler User's Manual"**
(uCom-4)
Describes source program format, assembler directives, operation of the assembler, and assembly listing format.
NEC Electronics U.S.A. (34pp)

© IC MASTER 1984

MICROPROCESSOR

Programming (cont)

1 **"μPD379 Application Note"**
(uPD379)
Bisync and SDLC protocols using the μPD379.
NEC $1 (20pp)

Systems

2 **"A Small Z8000 System"**
Outlines the hardware design implementation of a small computer using the Z8002 microprocessor, ROMs, EPROMs, dynamic RAMs, and parallel and serial I/O devices. The interface requirements of the Z8002 to memory and Z80A peripherals are described, with design alternatives given.
Zilog Microprocessor Applications Reference Book 3-17 (11pp)

3 **"12-Bit Addressing with the Z8 Family"**
(Z8600, Z8601)
Explains how the Z8601 accesses data in three of four memory spaces: internal program memory, external program memory, and external data memory.
Zilog Microprocessor Applications Reference Book 1-31 (2pp)

4 **"6500 Hardware Manual"**
(MCS6500 Series)
Describes the hardware aspects of the 6500 microprocessor family and related support devices.
Commodore Semiconductor Group

5 **"A CDP1800-Based CRT Controller"**
(CDP1800, CDP1809, CDP1870, CDP1876)
Discusses the application of the RCA two-chip video interface system to a CRT controller system.
RCA ICAN-7038 (8pp)

6 **"A Counter/Timer for COSMAC Systems"**
(CDP18S005, CDP18S007, CDP18S008)
Describes a counter/timer that can be built and used in conjunction with COSMAC development systems or any system using the COSMAC Microboard Universal Backplane. The counter/timer can be used to determine how much time a program is spending in a particular area of code.
RCA ICAN-6907 (8pp)

7 **"A Data Communications System Using an MC6809 MPU, MC68652 MPCC, and/or the MC68661 EPCI"**
(MC68009, MC68652, MC68661)
Describes hardware considerations for interfacing the MC68661 Enhanced Programmable Communications Interface and the MC68652 Multi-Protocol Communications Controller with the MC6809. Test software is included to illustrate the use of MC6809 instructions to operate both devices.
Motorola Semiconductor AN-839 (12pp)

8 **"A Guide to the Selection of Support Components for the Series 3000 Microprocessor"**
(N3001, N3002)
Categorizes the various components used to implement major sections of a typical microprocessor system.
Signetics AM-1 (4pp)

Systems (cont)

9 **"A Microprogrammed CPU Using AM29116"**
(AM29116, AM2914, AM2910, AM2904)
Describes a general-purpose 16-bit CPU built around the AM29116 16-bit bipolar microprocessor.
Advanced Micro Devices (16pp)

10 **"A Minimal S6802/S6846 Systems Design"**
(S6802, S6846)
Presents a minimal prototyping system design using the devices.
American Microsystems AN-79-68-02 (3pp)

"A PROM Programmer for the SC/MP LCDS"
See listing under (Memory) PROMs (National)

11 **"A Programmer's Guide to the Z8 Microcomputer"**
(Z8)
This note describes the important features of the Z8, with software examples that illustrate its power and ease of use. Topics include accessing register, program, and external data memory, context switching, bit manipulations, stack operations, interrupts, timer/counter and I/O functions, and arithmetic routines.
Zilog Microprocessor Applications Reference Book 1-35 (25pp)

12 **"A Simple High Speed Bipolar Microprocessor Illustrates System Design and Microprogram Techniques"**
(MC10801, MC10803)
Describes a complete bipolar LSI systems design using 10 ICs to perform 2's complement add, subtract, multiply and divide.
Motorola AN-774 (12pp)

13 **"A Slave CDP1802 Serial Printer Buffer System"**
(CDP1802)
Describes a CDP1802-based stand-alone line-printer buffer that links a master processor system to a serial printer through an RS232C interface.
RCA ICAN-6991 (8pp)

14 **"A User's Guide to the Series 3000 Microprocessor Chip Set"**
(N3001, N3002)
Describes devices, instruction sets. Design examples included.
Signetics AM-2 (14pp)

15 **"A Z80-Based System Using the DMA with the SIO"**
(Z80A, Z80A-SIO)
Describes the use of the Z80A-SIO and Z80A-DMA hardware/software in a Z80-based system to transfer data to the SIO via the DMS.
Zilog Microprocessor Applications Reference Book 2-35 (11pp)

16 **"AM2914 Priority Interrupt Encoder"**
(AM2913, AM2914, AM2900, 9080A)
Provides data sheet information on devices. Outlines construction of a microprogrammable, bipolar, LSI interrupt structure for the 2900 and 9080A processors using the 2914.
Advanced Micro Devices (33pp)

17 **"Advanced Architectural Features of the Z8000 CPU"**
(Z8000)
Describes the organization, memory use, interrupt and trap handling, instructions, and data capabilities of the Z8000 family of microprocessors.
Zilog Microprocessor Applications Reference Book 3-3 (14pp)

MICROPROCESSOR

Systems (cont)

1 **"An Introduction to Memory Management"**
(Z8010-MMU)
Discusses the advantages of memory management techniques applied to the microcomputer world.
Zilog Microprocessor Applications Reference Book 3-29 (7pp)

2 **"An Introduction to the Z8010 Memory Management Unit (MMU)"**
(Z8010-MMU)
Examines the uses of memory management in computer systems, and explains how the Z8010 MMU supports the Z8001 processor in the use of its large address space.
Zilog Microprocessor Applications Reference Book 3-29 (19pp)

3 **"An M6800 Clock System That Handles DMA and Memory Refresh Cycle Stealing"**
(MC6800, MC6875)
Presents a method for stealing cycles from the MPU for DMA transfers, refreshing memory through cycle stealing, and also providing refresh to an MC6800 dynamic MPU after each cycle stolen. Block diagrams included.
Motorola AN-787 (6pp)

4 **"An Optimizing Driver for NEC Spinwriter and Diablo Printers"**
Presents a driver program for NEC and Diablo full character printers. Prepared as a companion to the ZFORM text formatting utility program, it nevertheless suits a variety of applications, especially those for printing long lines of text as in business-oriented data base management systems.
Zilog Microprocessor Applications Reference Book 6-3 (56pp)

5 **"Analog Input/Output for Microprocessors Made Easy"**
(MP10, MP11, MP20, MP21)
Outlines features of devices and describes various ways each can be handwired to suit user configurations. Includes block diagrams of hookups with SC/MP, Z80, F8, 6800, 8080, 8085 and 9002 MPUs as well as discussion of memory mapped vs. accumulator I/O.
Burr Brown AN-87 (6pp)

6 **"Application Memo to Control Store Sequencer 8X02"**
(8X02)
Presents a functional description and gives microprogramming system suggestions.
Signetics Bipolar Application Memo 3 (7pp)

7 **"Application Technique for the 2651 PCI"**
(2651)
Shows application techniques for the 2651 programmable communications interface.
Signetics M26 (2pp)

8 **"Applying the Z80 SIO in Asynchronous Data Communications"**
(MK3884)
Describes the operation of the Z80-SIO in serial asynchronous data links. Programming examples are given for initialization, data transfer and error detection and recovery.
Mostek 1982/83 Z80 Designers Guide V-23 (6pp)

Systems (cont)

9 **"Architectural Concepts for Microprocessor Peripheral Families"**
(Z8038, Z-SCC)
Discusses local buses as a way of overcoming the constraints of limited available signal lines in 16-bit processors. Focuses on the use of an intelligent FIFO I/O device in a high-speed parallel/serial front-end processor for a high-end microcomputer system.
Zilog Microprocessor Applications Reference Book 3-105 (3pp)

10 **"Basic Microprocessors and the 6800"**
(MC6800)
Introduces microprocessor basics and the M6800 microcomputer system including details of the hardware addressing modes, system configuration, and instruction set. Supplies programming examples complete with flow charts, source program, and assembled output.
Motorola $12.90 (272pp)

11 **"Bit-Slice Microprocessor Design Takes a Giant Step Forward with "Scottky-Coupled-Logic" Circuits"**
(IDM2900)
Covers a four-bit slice Schottky-coupled-logic design that combines the flexibility of the industry standard 2900 microprocessor architecture with advanced LSI processing.
National Semiconductor AN-203 (12pp)

12 **"CDP1800-Based Video Terminal Using the RCA Video Interface System, VIS"**
(CDP1800, CDP1869, CDP1870, CDP1876)
Discusses the application of the RCA Video Interface System to video terminals, industrial displays and broadcast-TV text overlays. Describes hardware and software implementation. Includes schematics, block diagrams, flowcharts, and VIS operating system listing.
RCA ICAN-7032 (36pp)

13 **"CDP1800-Series Multiprocessing for Maximum Performance"**
(CDP1800)
Discusses the mechanics of multiprocessing and gives practical examples of how a CDP1800 CPU can be used in the realm of intelligent control.
RCA ICAN-7079 (10pp)

14 **"CDP1800-Series Peripherals—Building Blocks of a Complete Processor Family"**
(CDP1800)
Discusses an array of auxiliary chips that make available to the system designer the functions and performance levels that were once only achievable with NMOS.
RCA ICAN-7023 (8pp)

15 **"CDP1802-Based Designs Using the 8283 Programmable Counter/Timer"**
(CDP1802)
Describes methods by which the 8283 programmable counter/timer can be incorporated in RCA COSMAC-based microprocessor systems (CDP1802)
RCA ICAN-6693 (4pp)

16 **"CDP1804 and CDP1805 Processors Improve System Performance and Lower Chip Count"**
(CDP1804, CDP1805)
Describes the use of the CDP1804 and CDP1805 processors in extending the capability of the CDP1802, both in higher performance and additional system functions, while maintaining upward software and hardware compatibility.
RCA ICAN-6957 (6pp)

MICROPROCESSOR

Systems (cont)

1 **"Cassette Tape I/O for COSMAC Microprocessor Systems"**
(CDP18S020, CDP18S024, CDP18S025, CDP18S005, CDP18S007, CDP18S691)
Describes circuit and software for adding cassette-tape I/O to the COSMAC evaluation kit and development system, or the Microboard prototyping kit.
RCA ICAN-6934 (4pp)

2 **"Clock-Hold Schemes for the IMP Microprocessor Family"**
(IMP-8C, IMP-16C)
Presents scheme to extend the clock-hold function for additional periods of the main system clock, using the DM8570 shift register.
National AN-105 (4pp)

3 **"Considerations for Interfacing the μPD765 to the CDC9404B and 9406-2, -3 Flexible Disc Drives"**
(uPD765)
Describes design procedures for connecting CDC flexible disk drives to the μPD765 with emphasis on phase lock loop.
NEC AN10 (14pp)

"Data Acquisition System Interface to Computers"
See listing under (Interface) Converters (National)

4 **"Design of Clock Generators for Use with RCA COSMAC Microprocessor"**
(CDP1802)
Describes a crystal controlled clock generator using on-chip circuits and crystal and RC generators using external circuits.
RCA ICAN-6565

5 **"Designing Microcomputer Systems for Electrically Noisy Environments"**
Describes some electrical noises and noise environments. Reviews design techniques that reduce noise susceptibility, including layout, power supply distribution and decoupling, and shielding and grounding techniques. Automotive and ESD environments are emphasized.
Intel AP-125 (24pp)

"Device Operation and System Implementation of the Asynchronous Communications Interface Adapter MC6850"
See listing under (Interface) Data Transmission (Motorola)

6 **"FDC9216 Floppy Disk Data Separator"**
(FDC9216)
Explains the functions of a data separator and the theory of operation of the FDC 9216/B. FM and MFM encoding schemes are illustrated, as are two system configurations using the 9216: one with the FDC 179X floppy disk formatter controller; one with the NEC 765 floppy disk controller. Includes test results for the 9216 used with 5¼-inch and 8-inch floppy disk drives.
Standard Microsystems TN6-1 (11pp)

7 **"Fine Tuning the ALU Carry Path"**
(DM74S182)
Provides a look at higher speed look-ahead carry techniques. Covers four basic methods (ripple carry, single level, multilevel, shifted) and examines factors affecting choice of technique.
National AN-230 (7pp)

Systems (cont)

8 **"Floppy Disk Controller"**
(8X330)
Describes hardware and software of a floppy-disk controller design that demonstrates the capabilities of the 8X330 floppy disk formatter/controller.
Signetics

9 **"General Purpose Interface Adapter"**
(S68488)
Defines limitations and characteristics of a general-purpose interface adapter and discusses software considerations for interfacing with the IEEE488-1978 standard instrument bus.
American Microsystems Inc. (3pp)

10 **"Generating Non-Standard Baud Rates with R6551"**
(R6551)
Describes how the R6551 can be used to generate baud rates other than 15 selectable ones specified for the device.
Rockwell Document No. 6500 No. 3 (2pp)

11 **"IDM2901A File Expansion Using the DM85S68"**
(DM85S68, IDM2901A)
Discusses file expansion for the μP using a register array.
National Memory Applications Handbook (1pp)

12 **"IMP-16L DMA—What It Is and How to Use It"**
(IMP-16)
Discusses general theory of the DMA Bus, gives examples of priority expansion and data transfer.
National AN-135 (6pp)

13 **"Increasing the Number of Control Flags and Jump Conditions in the IMP-16C"**
(IMP-16C)
Describes simple and economical method of increasing the number of testable jump conditions and the number of control flags on the IMP-16C microprocessor.
National AN-101 (4pp)

14 **"Interface Techniques for the 2651 PCI"**
(2651)
Covers interfacing the 2652 programmable communications interface with the SC/MP, Z80, 8085, and 6800 microprocessors.
Signetics M22 (8pp)

15 **"Interfacing 16 Pin Dynamic RAMs to the Z80A Microprocessor"**
(Z80)
Presents the major design considerations, and a design example, for interfacing 16-pin dynamic RAMs, both 4k and 16k to the Z80 and Z80A. Supplies circuit and timing diagrams.
Zilog (27pp)

16 **"Interfacing Mostek's MDX-PIO to OPTO-22's PB24"**
(MDX-CPU2, MDX-PIO)
Shows how to interface a microcomputer system to an OPTO-22 PB24, a 24-channel I/O panel using solid-state relays.
Mostek Applications Brief (8pp)

MICROPROCESSOR

Systems (cont)

1 **"Low Cost Crystal Oscillator for Clock Input"**
(R6500)
Describes a low cost oscillator circuit which produces the baud input frequency required by the clock generator circuits in the R650X series microcomputers. The circuit uses one of two readily available low cost crystals. Circuit diagram.
Rockwell Document No. 1 (1pp)

2 **"Low-Power Techniques for Use with CMOS CDP1800-Based Systems"**
(CDP1800)
Describes techniques for reducing the power requirements of microcomputer systems.
RCA ICAN-7029 (6pp)

3 **"M6800 Systems Utilizing the MC6875 Clock Generator/Drive"**
(MC6875)
Gives extensive design examples using the MC6875 in systems including slow or dynamic memories, and DMA (multiprocessor) applications.
Motorola AN-775 (20pp)

4 **"MC6801/03 Port Expansion"**
(SN74LS374, MC6821, SN74LS163, SN74LS154, SN74LS175, SN74LS377, SN74LS165)
Shows various methods for expanding I/O capability of the MC6801/03 microcomputers using various peripheral chips.
Motorola AN-797 (8pp)

5 **"MCS-51 Microcomputer User's Manual"**
(8051, 8751, 8031)
Describes system architecture, instruction set and software; includes applications examples and data sheets.
Intel (448pp) $7.50

6 **"MCS-85 User's Manual"**
(8085, MCS-85)
Describes this 8085 based system and peripheral components. Extensive coverage through data sheets.
Intel $5.00 (273pp)

7 **"MN1400 Series 4-Bit One-Chip Microcomputers User's Manual"**
(MN1400, MN1402, MN1498, MN1499)
Introduces the MN1400 family. Encompasses system architecture, timing, and the instruction set including examples of various commands and routines.
Panasonic (65pp)

8 **"Memory Management Techniques Using the MC6829"**
(MC6829, MC6809)
Describes an MC6809-based system in which an MC6829 memory management unit is used to increase the memory capacity of the system to a maximum of 2M bytes. With the mapping RAM technique described, data can be written to sequential addresses that correspond to the upper N bits of an expanded address. Includes block diagrams, timing diagrams and tables.
Motorola Semiconductor AN-859 (48pp)

9 **"Microcomputer Applications Handbook"**
Provides application hardware and software information for the entire microcontroller line, which includes both the MCS-48 and the MCS-51 families.
Intel $7.50

Systems (cont)

10 **"Microprocessor Systems Handbook"**
Explains μP hardware, the interaction of hardware and software, and the interfacing of μP's with A/D and D/A converters. Topics covered include memory addressing, I/O operations, and applications of various microprocessors.
Analog Devices $9.50 (218pp)

11 **"Minimum System Design TMS 9900 16-Bit Microprocessor"**
(TMS9900)
Explains system design, system performance, and minimum system configuration.
Texas Instruments Application Report CA-184A (7pp)

12 **"Minimum System Design with the S9900 16-bit Microprocessor"**
(S9900)
Describes device and basic system configuration. Includes timing and block diagrams.
American Microsystems AN-79-99-02 (6pp)

13 **"Monitor for the MC146805G2L1 Microcomputer"**
(MC146805G2L1)
The MC146805G2L1 ROM contains a monitor routine that provides the user with the ability to evaluate the microcomputer using a standard RS232 terminal. The user can enter short programs into the on-chip RAM and execute them via the monitor. A description of the monitor program is given along with an assembled listing of the actual program.
Motorola Semiconductor AN-852 (16pp)

14 **"Multi-Processor Controller Using the MC6809E and the MC68120"**
(MC6809E, MC68120)
Two alternatives for providing additional throughput in developing any microprocessor system include single processor and multi-processor. This note investigates both alternatives and describes a basic multi-processor system.
Motorola Semiconductor AN-850 (20pp)

15 **"N8080 System Design Manual"**
(INS8080A, DP8212, DP8216, DP8224, DP8226, DP8228, DP8238, INS8251, INS8255)
Describes the INS8080A μP including architecture, timing, data and instruction representation, and I/O operation and control. Also covers use of various support chips.
National $5.00 (72pp)

16 **"New CDP1805 Microprocessor Upgrades CDP1800-Based Systems"**
(CDP1805)
Describes the advantages of the CDP1805 in speeding throughput and reducing chip count while retaining the advantages of register-based CDP1800-series architecture.
RCA ICAN-7009 (6pp)

17 **"New CMOS CDP1800-Series Processors Enhance System Performance"**
(CDP1800)
Reviews the features of the CDP1800 Series processors and discusses the attributes of the CDP1804 and CDP1805 microprocessors.
RCA ICAN-6971 (6pp)

MICROPROCESSOR

Systems (cont)

1 **"New CMOS CDP1800-Series Processors Reduce Chip Count"**
(CDP1800, CDP1804)
Combining CPU, memory, and peripheral functions on a single chip, the CDP1804/1805 can provide a compact system design along with battery operation.
RCA ICAN-6968 (4pp)

2 **"Next Generation CRT Systems"**
(CRT9007, CRT9006, CRT9212, CRT9021)
Enumerates the benefits brought to new-generation CRT systems by a video processor and controller, single- and double-row buffer, and a video attributes controller. Schematics for typical configurations are given, and various operating and addressing modes are described.
Standard Microsystems AN4-4 (23pp)

3 **"Number Cruncher (MM57109) Interface to Microprocessor"**
(MM57109)
Describes the MM57109 number cruncher unit which can perform most arithmetic functions found in complex hand-held calculators and interfaces either to a microprocessor or a random logic system. Provides schematics of interface logic and a flow chart for initialization of the device.
National AN-186 (10pp)

4 **"Optimizing Hardware/Software Trade-Offs in RCA CDP1802 Microprocessor Applications"**
(CDP1802)
Presents examples of processor interfaces that minimize external hardware and through programming techniques, minimize speed requirements on the CPU.
RCA ICAN-6704 (10pp)

5 **"PIC1650 8 Bit A to D Example Program"**
(PIC1650)
Provides diagram, flowchart, and example program for an A/D converter system using the device.
General Instrument Bulletin 1001 (3pp)

6 **"Peripheral Components for Microcomputers"**
(U250B, U265B, U427B, U180M, U327M, U328M, U338M, U340M, U3040M, U3042M, U3060M, U3070M, U3082M)
Discusses peripheral ICs designed for use with single-chip microcomputers.
AEG-Telefunken SI 6.81 (3pp)

7 **"Power-On Reset/Run Circuits for the RCA CDP1802 COSMAC Microprocessor"**
Provides diagrams and discussion of several circuits which enable a power-on reset/run capability for the device.
RCA ICAN-6581 (2pp)

8 **"Product Capabilities Manual"**
(8X300)
Describes the capabilities of the 8X300 microcontroller family in high-speed applications, including computer peripherals, industrial controllers and telecommunications.
Signetics

9 **"Programming and Interfacing to the CRT 9007 VPAC"**
(CRT9007)
Worksheets and schematics are provided for implementing a video terminal using the CRT9007 video processor and controller.
Standard Microsystems AN4-5 (21pp)

Systems (cont)

10 **"R6531 Address Lines for Contiguous ROM"**
(R6502, R6531)
Describes an 8-bit μC system using seven R6531's (ROM-RAM-I/O-Counter) and a single R6502. The ROMs are designed to be a contiguous block extending from highest address down. Supplies diagrams and table for address line selection.
Rockwell Document No. R6500 No. 6 (2pp)

11 **"Register-Based Output Functions for RCA COSMAC Microprocessors"**
(CDP1802, CDP1852)
Describes circuits using the CDP1852 I/O port for outputting information from any of the 16 general purpose scratch pad registers of the CDP 1802 microprocessor.
RCA ICAN-6562

12 **"S2000 Family Extended Memory Implementation"**
(S2000)
Shows four method for connecting external memory to members of the S2000 single-chip microcomputer family.
American Microsystems AN-79-2K-01 (3pp)

13 **"S2811 Signal Processing Peripheral"**
(S2811)
Reprints of technical articles on the S2811.
American Microsystems

14 **"SCC in Binary Synchronous Communication"**
(Z8030)
This note examines the implementation of a communications controller in binary synchronous mode with a Z8002 CPU acting as a controller for the Z8030 serial communications controller.
Zilog (10pp)

15 **"Single Chip Multiprocessor Arbiter"**
Describes use of Signetics' Field Programmable Logic Sequencer to provide a convenient and cost effective means for implementing a synchronous arbiter, to control system communication with peripherals, by a single chip.
Signetics AN-007 (8pp)

16 **"Software Conversion of Analog Outputs to Analog Inputs"**
(MP10, MP11)
Discusses using the devices as an analog input system with diagrams illustrating hookups to the 6800 and 8080. Includes software program for each processor as well.
Burr Brown AN-88 (4pp)

17 **"Software Design for Microprocessors"**
(SBP0400, TMS1000, TMS5501, TMS8080, TMS9900)
Presents basic microprocessor fundamentals. Includes such topics as basic terms, basic machine architecture, instruction sets, and programming. Sample design problems are examined.
Texas Instruments $12.50 (385pp)

18 **"Static Memory Systems Utilizing the HM-6100"**
(HM6100)
Describes CMOS, nonvolatile CMOS and NMOS memory systems.
Harris Semiconductor AN-HM004 (7pp)

MICROPROCESSOR

Systems (cont)

1 **"TIM Manual"**
(MCS6530)
Describes the program contained in the ROM portion of the 6530-004.
Commodore Semiconductor Group

2 **"TMS 5501 I/O in TMS 8080A μP Systems"**
(TMS5501, TMS8080A)
Describes operation and use of this input/output controller.
Texas Instruments Application Report CA-185A (18pp)

3 **"TMS9900 Family System Design Manual"**
(TMS9900)
Covers the general operation of TI's TMS9900 16-bit family of microprocessors and peripheral support devices.
Texas Instruments Application Report MP702 (120pp)

4 **"The AM9511/12 Floating Point MPU"**
(AM9511, AM9512)
Discusses device features and command set. Outlines algorithm and error that can be expected from its use.
Advanced Micro Devices (21pp)

5 **"The Bisync Protocol and a Bisync Data Link Between Two MC68000 MPU Based Systems"**
(MC68000, MC68661, MC2661, MC68652, MC2652, MC68653, MC2653)
Describes the hardware and software required to implement a Binary Synchronous Communications (BISYNC) data link between two MC68000 based systems. Includes circuit diagrams and flow charts.
Motorola Semiconductor AN-882 (34pp)

6 **"The ICL7104: A Binary Output A/D Converter for μ Processors"**
(ICL7104, ICL8052)
Describes designing with this 2 device A/D converter in detail. Discusses interfacing with and without handshakes, performance enhancement, and external auto-zero. Includes schematics, block diagrams, and graphs.
Intersil Application Bulletin A030 (14pp)

7 **"The M10800 MECL LSI Processor Family—Three Descriptive Articles"**
(MC10800, MC6800)
Presents three articles about the device: "Get the Best Microprocessor Performance"; "The MSP: GTE Sylvania's Microsignal Processor"; "M10800 Microprogrammed Demonstrator". The first examines features of the processor; the second discusses a customer application; and the third describes a demonstrator treated as a peripheral to the M6800 system.
Motorola AN-776 (21pp)

8 **"Timing in an Interrupt-Based System with the Z80 CTC"**
(Z80-CTC)
Details both continuous time-interval operations and single-interval operations performed by the Z80-CTC in a Z80-based system.
Zilog Microprocessor Applications Reference Book 2-107 (11pp)

9 **"Understanding and Using the CDP1855 Multiply/Divide Unit"**
(CDP1855)
Shows how the use of hardware can eliminate complex and slow software routines for performing arithmetic and signal-processing algorithms in 8-bit microprocessor systems.
RCA ICAN-6970 (11pp)

Systems (cont)

10 **"Use of CMOS RAM CDP1824 with RCA Microprocessor Evaluation Kit CDP18S020"**
(CDP1824)
Describes the CDP1824 and its application in the CDP18S020 Evaluation Kit, and presents examples of how the CDP1824 can be combined with the CDP1831 ROM to form efficient ROM-RAM systems.
RCA ICAN-6537 (4pp)

11 **"Use of CMOS ROMs CDP1831 and CDP1832 With the RCA Microprocessor Evaluation Kit CDP18S020"**
(CDP1831, CDP1832)
Describes the operation and design of CDP1831- and CDP1832-based read-only memory systems in the CDP18S020 Evaluation Kit.
RCA ICAN-6536 (4pp)

12 **"Use of CMOS-SOS RAM CDP1822 with RCA Microprocessor Evaluation Kit CDP18S020"**
(CDP1822)
Describes the CDP1822, its operation, and its application in the CDP18S020 Evaluation Kit.
RCA ICAN-6539 (4pp)

13 **"Use of the CDP1856 and CDP1857 Buffer/Separator in CDP1802 Microprocessor Systems"**
(CDP1802, CDP1856, CDP1857)
Describes use of the CDP1856 and CDP1857 four-bit buffers or separators in the CDP18S020 Evaluation Kit and CDP18C024 E-K/Assembled-Editor Design Kit. Includes functional diagrams.
RCA ICAN-6657 (4pp)

14 **"User Manual for the CDP1802 COSMAC Microprocessor"**
(CDP1802)
Describes the device architecture and its instruction set with examples of each command. Reviews basic programming techniques and supplies timing diagrams.
RCA MPM-201B $5.00 (115pp)

15 **"User's Manual for 8X305 Controller"**
(8X305)
Provides hardware/software details pertaining to the 8X305 microprocessor and its family of supportive parts with emphasis on timing, programming and system interface.
Signetics

16 **"Using Low-Cost 1 MHz Peripherals in a 2 MHz System with the MC68B09 and the MC68B09E"**
(MC68B09, MC68B09E)
Discusses how to minimize system cost by manipulating 2 MHz MPU access time to accommodate slower peripherals and memories.
Motorola Semiconductor AN-836 (7pp)

17 **"Using NSC-800 & 8085 ISE as Automatic Test Equipment"**
(Starplex)
Discusses techniques for using a microprocessor development system and in-circuit emulators for functional tests on production systems.
National Semiconductor SA SPX-AP-7 (16pp)

© IC MASTER 1984

MICROPROCESSOR

Systems (cont)

1 **"Using SCC with Z8000 in SDLC Protocol"**
(Z8030, Z8000)
Outlining the basics of the SDLC communications protocol, this note explains how to use the Z8030 SCC with a Z8000 CPU to implement an SDLC controller.
Zilog (12pp)

2 **"Using the 2651 with BISYNC"**
(2651)
Details how the 2651 PCI supports IBM's Binary Synchronous Communications protocol.
Signetics M24 (4pp)

3 **"Using the COM8004 for High Data Integrity in Bit-Oriented Protocols"**
(COM8004)
Describes the advantages of the COM7004's 32-bit generating polynomial in cyclic-redundancy-check schemes for error detection in bit-oriented protocols.
Standard Microsystems TN5-1 (5pp)

4 **"Using the COSMAC Microboard Battery-Backup RAM, CDP18S622"**
(CDP18S622)
Describes circuits, operation and application of an 8-kbyte, CMOS RAM board with on-board rechargeable batteries.
RCA ICAN-6955 (5pp)

5 **"Using the MC68000 and the MC6845 for a Color Graphics System"**
(MC68000, MC6845)
Describes a state-of-the-art color graphics system using the MC68000 16-bit microprocessor and the MC6845 CRT Controller.
Motorola Semiconductor AN-834 (28pp)

6 **"Using the MK3807 VCU in a Microprocessor Environment"**
(MK3807)
The MK3807 is a programmable CRT video control unit with the logic functions required to generate all the timing signals for the formatting and presentation of interlaced or noninterlaced video data on standard and nonstandard CRT monitors. This note describes application examples for 80-character by 24-row, 40-character by 12-row, and 256-pixel by 256-pixel graphic displays.
Mostek 1982/83 Z80 Designers Guide V-29 (19pp)

7 **"VIS—A Commercially Competitive CRT Controller Chip Set"**
(CDP1802, CDP1869, CDP1870, CDP1876)
Gives an industry-wide comparison of various CRT controllers, and discusses the application of the RCA two-chip vieo interface system to CRT display applications.
RCA ICAN-7067 (4pp)

8 **"Z-Bus Component Interconnect"**
(Z8000)
Describes the Z-Bus, a high-speed parallel shared bus that links components of the Z8000 family, and discusses bus signals, timing transactions, and interrupts.
Zilog Microprocessor Applications Reference Book 5-3 (15pp)

9 **"Z8 Family Software Framing Error Detection"**
(Z8600)
Describes a simple, low-overhead software method for detecting framing errors in the Z8600 UART microcomputer.
Zilog Microprocessor Applications Reference Book 1-33 (2pp)

Systems (cont)

10 **"Z80 Interfacing Techniques for Dynamic RAM"**
(Z80, MK4027, MK4116)
Provides specific examples of interfacing 16-pin dynamic memories to the Z80 microprocessor. Includes timing diagrams and refresh information.
Mostek

11 **"Z80 Memory Expansion for the Z800"**
(Z80, Z800)
Describes a way for the Z80 user to increase memory addressing space to 16Mb and incorporate memory protection features while maintaining object code compatibility with application software.
Zilog (12pp)

12 **"Z8000 vs. 68000: Introduction"**
(Z8000)
Outlines the similarities and differences of the Z8000 and 68000 CPUs.
Zilog Microprocessor Applications Reference Book 3-57 (2pp)

13 **"Z8000 vs. 68000: Operating System Support Features"**
(Z8000)
This note explains the importance of operating system support features in microprocessors, and contrasts the design of the Z8000 and 68000 in this area.
Zilog Microprocessor Applications Reference Book 3-75 (9pp)

14 **"Z8000 vs. 68000: Register Architecture"**
(Z8000)
Discusses the different approaches of the Z8000 and 68000 to register architecture: general purpose vs. special purpose registers, pairing vs. telescoping of subregisters, and extensibility of register sets.
Zilog Microprocessor Applications Reference Book 3-59 (2pp)

15 **"Z8016 Z8000 DTC DMA Translation Controller"**
(Z8016)
Describes the advantages of a DMS transfer controller in high-speed data processing, and explains the interface to Z8000 and 8086 CPUs, as well as peripheral devices.
Zilog (26pp)

16 **"Z8530 and Z8030 SCC Initialization: A Worksheet and an Example"**
(Z8530, Z8030)
This note describes the software initialization procedure for the Z8530 and Z8030 serial communications controllers. In a sample program, the Z8000 initializes the Z8530 for asynchronous operation.
Zilog (8pp)

17 **"Z8671 Seven Chip Computer"**
(Z8671)
The Z8671 is a Z8601 single-chip microcomputer with a Basic/Debug Interpreter and Debug monitor preprogrammed into 2 Kbytes of on-chip ROM. This note describes the design of a low-complexity board that runs the interrupter and monitor with an external 4K RAM and 2K ROM.
Zilog (7pp)

Systems (cont)

1 **"μCOM-43 Single Chip Microcomputer Users' Manual"**
(uCOM-43)
Describes device architecture and specifications. Includes timing diagrams.
NEC (48pp)

2 **"μCOM-44 Single Chip Microcomputer Users' Manual"**
(uCOM-44)
Describes device architecture and specifications. Includes timing diagrams.
NEC (40pp)

3 **"μCOM-45 Single Chip Microcomputer Users' Manual"**
(uCOM-45)
Describes device architecture and specifications. Includes timing diagrams.
NEC (36pp)

4 **"μPD371 Magnetic Tape Cassette/Cartridge Controller Users Manual"**
(uPD371)
Gives description, timing and circuit diagrams. Assembly language listing for use with NEC's 8080A.
NEC $10.00 (58pp)

5 **"μPD372 Mini-Floppy Disk Controller Users Manual"**
(uPD372)
Supplements the Floppy Disk Manual for Mini-Floppy applications.
NEC $10.00 (44pp)

MICROCOMPUTER BOARDS

6 **"RSC-FORTH Development Board"**
(R65F11, R65F12, F65FR1)
A description and schematic for an RSC-FORTH single-chip microcomputer development board. A PC board layout is also provided, including RS-232 and floppy-disk drive interfaces.
Rockwell No. 2162 (12pp)

Applications

7 **"A Microcomputer Industrial Control Interface Using I/O Modules"**
(TM990)
Describes Industrial Control Systems with TM990 Microcomputer Modules and 5MT ac/dc Input/Output Modules.
Texas Instruments Application Report MP 716 (20pp)

8 **"Designing Floppy Disk Systems (and a Sample CP/M Implementation)"**
(BLC-8221, BLC-8222)
Reviews theory of floppy-disk operation and describes how to use a floppy-disk drive with intelligent controller boards.
National Semiconductor SA4-8221/22 (54pp)

Applications (cont)

9 **"Introduction to Microprocessors"**
(TM990/u89)
This microprocessor textbook, based on the TM990/u89 University Board, provides an introduction to microcomputers and assembly language programming. Includes many program examples illustrating instructions, programming techniques, and I/O interfacing.
Texas Instruments (MPB30 Rev.*) $19.95 (570pp)

10 **"Micro-12 User Manual"**
(HB61000-1)
A complete documentation package for the Micro-12 microprocessor system, this manual describes control panel operations, system organization, sample programs, and hardware/software applications.
Harris Semiconductor (204pp)

11 **"Microboard Equipment Control"**
(18S02, CDP18S641, CDP18S644, CDP18S661, CDP18S693)
Describes the use of RCA Microboards in specialized manufacturing-test equipment.
RCA ICAN-7026 (6pp)

12 **"Microproducts Hardware Systems Reference"**
(MBC/1, MP100, 8562, 8563)
Describes the Microproducts MP/100 and MP/200 systems. Part I, a hardware systems reference, is designed for engineers and systems programmers. Part II, a troubleshooting guide, is intended for field service engineers.
Data General $25.00 (388pp)

13 **"Reentrant Programming"**
(TM990)
Describes the use of reentrant software to eliminate the need for providing separate copies of common subroutines for concurrently executing tasks.
Texas Instruments (6pp)

14 **"Scout Naked Mini 4/04"**
Describes the Scout Computer System incorporating the Naked Mini 4/04 processor. Discusses the basic machine, I/O and peripheral devices, and system software.
Computer Automation (272pp)

15 **"Software Development Using TM990/302 SDB and TIMBER"**
(TM990)
Covers the development of TM990 Series software with a TM990/302 Software Development Module, and TIMBER, a ROM-based executive program.
Texas Instruments Applications Report MP712 (92pp)

16 **"TM990 Analog Modules Applications Report"**
(TM990)
Describes the general operation of the TM990 Serial Analog modules and the software necessary for control.
Texas Instruments Applications Report MP714 (54pp)

17 **"TM990 Microcomputer Handbook"**
(TM990)
Describes the technical features of the TM990 product line. In addition to CPU, Memory and I/O Interface Modules, the book discusses software products, development systems, the TM99 System Bus, and customer support services.
Texas Instruments (207pp)

© IC MASTER 1984

MICROCOMPUTER BOARDS

Applications (cont)

1 **"TM990/101M EIA Communications Link"**
(TM990)
Describes the development of a software communications link between the TM990 board, a host computer, and an EIA RS232 interface for software development.
Texas Instruments Applications Report MP705 (52pp)

2 **"Technical Notes on Modification, Expansion, and Various Applications of the SYM-1"**
(SYM-1)
Explains how to expand the number of general purpose I/O lines in the SYM-1.
Synertek Systems TNP-1 $3.00 (60pp)

3 **"Z8002 CPU Small Single Board Computer"**
(Z8002)
This note describes a demonstration system built around the Z8002 and Z-Bus peripherals.
Zilog (13pp)

4 **"iSBC Applications Handbook"**
(iSBC80/40, iSBC80/10B, iSBC80/20-4, iSBC80/24, iSBC80/30, iSBC86/05, iSBC86/12A, iSBC86/14, iSBC86/25, iSBC86/40)
Contains application notes, reliability reports, and reprints of articles on the iSBC single-board computer family. Discusses hardware, software, and industrial control products.
Intel 501315 ($10.00)

INTERFACE

Converters

5 **"3 IC 8-Bit Binary Digital to Process Current Converter with 4-20 mA Output"**
(REF-01, DAC-08, OP-14)
Delineates the construction of a process current converter operating from −5v and 23v supplies. Complete theory of operation followed by calibration procedures and a detailed parts list are included.
Precision Monolithics AN-21 (2pp)

6 **"A Cookbook Approach to High Speed Data Acquisition and Microprocessor Interfacing"**
Shows how to design a complete data acquisition board with multiplexers, programmable gain amplifiers, track and hold, A/D converter, D/A converter, address decoding, read and write timing and interfacing to a microprocessor bus.
Intersil A020 (20pp)

7 **"A Digital Multimeter That Measures Frequency Using the 9400 F/V Converter"**
(9400)
Shows how to add frequency measurement capability to a low-cost standard DMM by adding an external circuit consisting of a F/V converter, resistors and capacitors.
Teledyne Semiconductor AN-14 (2pp)

8 **"A Low Cost, Easy-to-Build Successive Approximation Analog-to-Digital Converter"**
(DAC-100, CMP-01)
General discussion of feedback A/D converters. Operation of A/D converter capable of 8-bit conversions in 6 μs. The system is expandable to 10-bit resolution. It uses DAC-100, CMP-01, and a successive approximation register.
Precision Monolithics AN-11 (8pp)

Converters (cont)

9 **"A Low Cost, High-Performance Tracking A/D Converter"**
(DAC-100, CMP-01)
Basic operation of 8-bit tracking converter that uses DAC-100 series 10-bit D/A converter, CMP-01 series comparator, and 4-bit MSI up/down counters.
Precision Monolithics AN-6 (8pp)

10 **"A −55°C to +200°C 12-bit Analog-to-Digital Converter"**
(ADC10HT)
Presents design details of the ADC10HT, a 12-bit successive approximation hybrid A/D converter that operates over a −55°C to +200°C temperature range. The results of a 1000-hour life test are included.
Burr-Brown AN-112 (7pp)

11 **"AD DAC80 Reliability Predictions"**
(ADDAC80)
Describes model for calculating predicted failure rate of hybrid circuits per MIL-HDBK-217B and corresponding performance data for device.
Analog Devices (1pp)

12 **"AD DAC85 Reliability Predictions"**
(ADDAC85)
Presents model for calculating predicted failure rate of hybrid circuits per MIL-HDBK-217B and corresponding device data.
Analog Devices (1pp)

13 **"Am6012 12-Bit High-Speed DAC"**
(AM6012)
Describes characteristics of a 12-bit DAC and discusses various modes of operations and microprocessor interface considerations.
Advanced Micro Devices LIC-165 (12pp)

14 **"An Analysis of the Price and Performance of the AD558"**
(AD558)
Compares sample implementations of an 8-bit DAC function using discrete components versus an AD558 plus a single bypass capacitor. Advantages of the latter approach are detailed in terms of cost, speed, accuracy, reliability, power consumption, and real estate.
Analog Devices (3pp)

15 **"An Evaluation System for High-Speed A-D and D-A Converters"**
Describes a printed-circuit board for evaluating converters at the component level as well as the system level. A functional description of the components and the theory involved is included.
Motorola Semiconductor AN-848 (12pp)

16 **"An Introduction to the Sampling Theorem"**
Analyzes the sampling theorem and pitfalls encountered in its application to signal processing systems. Hardware implementation includes discussion of antialiasing filters, S/H circuits and D/A converters.
National Semiconductor AN236 (12pp)

17 **"Analog-Digital Conversion Notes"**
Covers many aspects of A/D and D/A converters including use, testing and specifying. Extensive applications information includes data systems, acquisition, distribution, communication.
Analog Devices $5.95 (254pp)

INTERFACE

Converters (cont)

1 **"Analog-to-Digital Conversion Techniques"**
Discusses open-loop and feedback techniques: frequency, pulse width, cascade, ramp, counter, successive approximation, multiple comparison subranging, nonlinear conversion, double and triple ramp conversion.
Motorola AN-471 (21pp)

"Analog-to-Digital Conversion Techniques with the M6800 Microprocessor System"
See listing under (Microprocessor) Systems (Motorola)

2 **"Application Circuits of μPC603D, 610D"**
(μPC603, μPC610)
Discusses functions and operating principles of each device as well as applications including a digitally programmable power source and a waveform generator.
NEC IEP-543 (24pp)

3 **"Application Information for μPC614D"**
(μPC614)
Provides application hints and parameters for a pulse width modulation converter in a digital multimeter application.
NEC (6pp)

4 **"Applications for the 9400 Voltage to Frequency/ Frequency to Voltage Converter"**
(9400)
Contains 25 block diagrams of applications in which the device is used.
Teledyne Semiconductor AN-10 (8pp)

"Applications of a Monolithic Sample-and-Hold/Gated Operational Amplifier"
See (Linear) Amplifiers, Operational (Harris)

5 **"Applications of the 8700 Series A/D Converters"**
(8700)
Supplies diagrams showing interface to autoranging circuits, to gas discharge displays, and to two independent displays, operated from one A/D.
Teledyne Semiconductor AN-9 (16pp)

6 **"Applications of the AD537 IC Voltage-to-Frequency Converter"**
(AD537)
Describes device theory and operation. Presents various applications including strain-gauge input, position transducers, and a photodiode input. Block diagrams are provided.
Analog Devies (20pp)

"Applications of the MC1405/MC14435 in Digital Meters"
See listing under (Linear) Instrumentation (Motorola)

7 **"Applications of the ZN425E 8-Bit A-D/D-A Converter"**
(ZN425)
Covers converter definitions, calibration, bipolar operation. Applications: ramp generation, peak detect, channel selection, weighing system, bargraph drive, multiply/divide, and function generation.
Ferranti (31pp)

8 **"Audio Applications for the DAC-76 Companding Converter"**
(DAC-76)
Discusses the multiplying and control characteristics of the DAC-76 in audio applications. High performance digitally-controlled attenuators are featured.
Precision Monolithics AN-28 (8pp)

Converters (cont)

9 **"Autoranging Digital Multimeter Using the MC14433 CMOS A/D Converter"**
(MC14433)
Describes using the MC14433 A/D converter to build an autorange digital multimeter. The multimeter includes ac and dc voltage ranges from 200mV to 200V, ac and dc current from 2mA to 2A full scale, and resistance ranges from 2 kilohms to 2 megohms full scale.
Motorola AN-769 (5pp)

10 **"Binary D/A Converters Can Provide BCD-Coded Conversion"**
(MC1408, MC1508)
Describes the MC1508 D/A converter used as a 2 or 2½ digit BCD converter. Describes application in a 2½ digit digital voltmeter.
Motorola AN-713 (4pp)

11 **"Build a Low Cost Data Acquisition System with Standard DIPs"**
(MN7130)
Shows how a complete 12-bit, 16-channel data acquisition system can be built by adding a few standard ICs to the MN7130 multiplexed sample/hold amplifier.
Micro Networks AN201 (6pp)

12 **"CA330 CMOS/SOS Flash A/D Converter Operates at Video Speed on Low Power"**
(CA330)
The CA330, a 6-bit A/D converter combining CMOS with an SOS process, brings cost, power, and real estate benefits to video speed applications. Two CA330s can be stacked to make a video-speed 7-bit converter, or three can be combined with a DAC, binary adder, control logic, and op amp to produce a very high-speed 12-bit A/D converter.
RCA ICAN-6956 (5pp)

13 **"CMOS A/D Converter Chips Easily Interface to 8080A Microprocessor Systems"**
(ADC3511, ADC3711, INS8080A)
Outlines techniques for interfacing AID converter devices to 8080A μP systems. Includes description of A/D conversion, BCD output capability, flowcharts, schematics, and block diagrams.
National CMOS Databook AN-200 (9pp)

14 **"CMOS DACs in the Voltage-Switching Mode"**
(AD7500 Series)
Explains how the AD7520 and other CMOS DACs can be used in a voltage-switching mode with no offset-induced nonlinearity. System benefits include the possibility of single-supply operation (including output op amp), increased speed, and economical digital bipolar operation.
Analog Devices (2pp)

15 **"CMOS DACs in the Voltage-Switching Mode Can Work from a Single Supply, Including Output Op Amp, for Fast Response, No Offset-Induced Nonlinearity"**
(AD7520, AD7521, AD7522, AD7523, AD7524, AD7530, AD7531, AD7533)
Describes techniques for making the above CMOS D/A converters operate in the voltage-switching mode with specified linearity.
Analog Devices (2pp)

© IC MASTER 1984

INTERFACE

Converters (cont)

1 **"Circuit Applications for a 12-bit ECL DAC"**
(DAC63, MC10176, MC10176, MC10136, MC10101, MCM10149)
Compares operation of TL and ECL D/A converters with respect to data skew, ground currents, line driving and receiving capability; includes discussions on amplitude and phase synthesis and the use of an ECL DAC in a 12-bit, 250ns A/D converter.
Burr-Brown Research AN-105 (6pp)

2 **"Companding Digital-to-Analog Converter"**
(DAC-86, DAC-87)
Discusses how a companding digital-to-analog converter (DAC) is the key component in PCM CODEC Systems.
Precision Monolithics AN-39 (13pp)

3 **"Counter Type A to D Converter"**
(HI1080)
Circuit details of an A to D converter employing a unidirectional digital counter and the HI-1080 eight-bit D to A converter to generate a ramp voltage.
Harris Semiconductor AN-512 (3pp)

4 **"D/A Converter Differential Linearity Error-It Really Shows Up"**
Discusses differential linearity, the difference in analog output for a change between two successive digital input codes. Gives graphs of two examples with the same linearity specification.
Burr-Brown AN-58 (2pp)

5 **"D/A Converter Generates Hyperbolic Functions"**
(DAC-20)
Explains operating theory and design considerations of two IC hyperbolic function generator. Includes circuit diagrams.
Precision Monolithics AN-23 (3pp)

6 **"DAC-08 Applications Collection"**
(DAC-08)
Discusses the benefits of dual output, and high compliance. Covers use as a CRT display driver, bridge transducer control system, waveform generator, digital addition/subtraction with analog output, digital attenuator and micro processor controlled A/D converter.
Precision Monolithics AN-17 (12pp)

7 **"DAC-08 Control of A 555 Timer IC"**
(DAC-08)
Describes a digitally or microprocessed controlled one-shot and an astable multivibrator using two of the low cost building blocks, the DAC-08 and the 555 timer. Digital control ranges of 255 to 1 and 510 to 1 are shown for one-shot and astable applications allowing periods of 18 μsec to 1.4 seconds and frequencies of 1 Hz to 60 kHz.
Precision Monolithics AN-36 (3pp)

8 **"Data Acquisition Handbook"**
(ICL7109, ICL7104, IH8510, ICL7103A, ICL8052A, HDAS-8, HDAS-16, ICH8500, ICL8007, ICL8043, ICL8048, ICL8049, ICL8013, ICL8211, ICL8212, IH5009, IH5025, IH5040, IH5009)
Comprehensive introduction to the principles of data acquisition and conversion, including a compilation of many technical articles published in industry trade journals. Contains detailed application information on D/A and A/D converters, data acquisition systems, samples/hold circuits, op amps, and V/F converters.
Intersil $5.00 (396pp)

Converters (cont)

"Data Acquisition Networks with NMOS and CMOS"
See listing under (Microprocessors) Applications (Motorola)

9 **"Data Acquisition and Conversion Handbook"**
Discusses data acquisition/conversion principles. With Applications and glossary.
Datei-intersil $4.95 (250pp)

10 **"Data Conversion Handbook"**
Defines the qualities, specifications, and techniques that combine to give D/A and A/D converters their special character. Also covers sample/hold amplifiers, multiplexers, and coding.
Hybrid Systems Free (175pp)

11 **"Data Conversion Interfacing with the 8080 Microprocessor"**
(8080)
Discusses Analog-to-Digital Conversion (ADC) and Digital-to-Analog Conversion (DAC) and their importance in input/output (I/O) control functions when interfacing with the 8080 Microprocessor. Describes low cost and system simplicity in the versatility of a DAC as it progresses from a μP output device to an ADC input function and finally to its use in a complete Data Acquisition System.
Precision Monolithics, Inc. AN-30 (12pp)

12 **"Data Conversion with Companding DAC Devices"**
Introduces companding principles and use of companding DACs in industrial and PCM transmission systems. Provides companding DAC circuit description and discussion of how μP based data acquisition systems, motion control, audio systems, and telecommunication systems.
Advanced Micro Devices (36pp)

13 **"Data Converter Test Methods for Digital Audio Applications"**
(PCM50, PCM52, PCM53, PCM75)
Discusses the relative importance of operating parameters of data converters when applied to digital audio systems as opposed to traditional instrumentation applications. The primary parameters are pinpointed, with appropriate test circuits and evaluation methods given.
Burr-Brown AN-113 (6pp)

14 **"Designing High Speed Data Acquisition Systems"**
Discusses the basics of data acquisition systems; focusing on A/D converters, sample-and-hold circuits, and multiplexer modules.
Teledyne Philbrick AN-21 (12pp)

15 **"Differential and Multiplying Digital-to-Analog Converter Applications"**
(DAC-08)
Describes use in 2-quadrant, 4-quadrant, 4-quadrant and AC-coupled multiplication. Also covers differential and ratiometric conversion, a nulling bridge circuit, a power monitor, and algebraic computation circuits with analog output.
Precision Monolithics AN-19 (8pp)

INTERFACE

Converters (cont)

1 **"Digital Voltmeters and the MM5330"**
(MM5330)
Describes basic counting techniques for building digital voltmeters and shows how the MM5330 can be used in a dual slope system.
National MOS/LSI Databook AN-155 (8pp)

2 **"Digital to Analog Converter High Speed DAC Family"**
(HI562, HI5608, HI5610)
Provides functional and operational diagrams plus descriptions of the devices.
Harris Semiconductor AN-523 (4pp)

3 **"Digital to Analog Converter Terminology"**
Explains need to D/A and terms used in specifying it.
Harris Semiconductor AN-522 (3pp)

4 **"Digital to Analog Converter: High Speed ADC Applications"**
Discusses tracking and successive-approximation a/d converter design. Presents a data acquisition system including block diagrams.
Harris Semiconductor AN-524 (3pp)

5 **"Digital-to-Analog Conversion Using the RCA CD4007A COS/MOS IC"**
(CD4007A)
Discusses resistance networks for DAC's and a voltage-follower amp for single-supply operation. Describes a 9-bit COS-MOS DAC.
RCA ICAN-6080 (6pp)

6 **"Digital-to-Analog Converter Applications"**
(HI1080, HI1085)
Operating modes and applications of HI-1080 converter, which features resistor ladder network and switching devices on same chip. Discusses cascaded D to A converter as well as up-down counter and successive approximation A to D converters.
Harris Semiconductor AN-511 (7pp)

7 **"Direct Bus Interfacing using the ZN427/ZN428"**
(ZN427, ZN428)
Describes how A/D and D/A converter chips are interfaced to most popular 8-bit microprocessors. Provides timing diagrams and electrical characteristics.
Ferranti Application Report 14 (9pp)

8 **"Do's and Don'ts of Applying A/D Converters"**
Examines topics concerning proper system design when using A/D converters. Subjects treated include ground loop errors, components, references, capacitive coupling, and thermal effects.
Intersil A018 (2pp)

9 **"Exponential Digitally Controlled Oscillator Using DAC-76"**
(DAC-76)
Depicts a 4-IC microprocessor-controlled oscillator with a 8159 to 1 frequency range covering 2.5 Hz to 20 kHz. The circuit uses an exponential current output D/A converter as a programmable current source.
Precision Monolithics AN-20 (3pp)

Converters (cont)

10 **"Extending the Capabilities of the MC10315/10317 Flash A/D Converters"**
(MC10315, MC10317)
Recent advances have provided the means to produce 7-bit flash converters in monolithic form. This note discusses some ways in which users can extend the resolution and speed of the basic devices.
Motorola Semiconductor AN-844 (6pp)

11 **"Function and Application of 3½ Digit A/D Converter Set"**
(LD110, LD111)
Describes the operation of the LD110 digital processor and the LD111 analog processor. Various DVM circuits are shown including circuits for ratio, current, ac voltage and frequency measurements. A detailed error analysis is provided.
Siliconix AN74-1 (12pp)

12 **"Function/Application of the LD120/LD121A 4¼-Digit A/D Converter Set in Measurement Systems"**
(LD120, LD121A)
The application of the LD120/1A ICs to A/D conversion systems in panel members and voltmeters is discussed. Operation of the devices is described, application circuits are considered, and a trouble-shooting chart is provided.
Siliconix AN77-1 (10pp)

13 **"Function/Application of the LD122/LD121A ±4½ Digit A/D Converter Set in Measurement Systems"**
(LD122, LS121A)
Discusses differential measurement techniques, input buffer selection considerations, system layout, grounding methods and troubleshooting in thermocouple, resistance bridge and strain-gage measurement systems using an A/D converter set.
Siliconix AN80-8 (8pp)

14 **"Gain Error and Gain Temperature Coefficient of CMOS Multiplying DACs"**
(AD7542, AD7527)
Details the parameters that affect the gain of CMOS multiplying DACs, including gain temperature coefficient due to gain trim resistors R1 and R2, gain shift due to leakage from V_{DD}, and offset shift due to leakage across the switches.
Analog Devices (4pp)

15 **"Gain Error and Gain Temperature Coefficient of CMOS Multiplying DACs"**
(AD7542, AD7527)
Discusses the various factors that cause the gain of multiplying D/A converters to vary with temperature.
Analog Devices (5pp)

16 **"High Speed Digital-to-Analog and Analog-to-Digital Techniques"**
Gives overview that includes voltage and current output D/A, parallel (flash), tracking, successive approximation, and parallel ripple A/Ds as well as nonsynchronous and synchronous VTF A/D. Glossary of terms.
Motorola AN-702 (14pp)

17 **"High-Performance Frequency-to-Voltage Converter Using the XR-2211"**
(XR2211)
Discuss the design of a stable, highly linear F/V converter using the XR-2211 phase locked loop.
Exar AN-23 (2pp)

© IC MASTER 1984

INTERFACE

Converters (cont)

"How to Specify and Test Voltage-to-Frequency and Frequency-to-Voltage Converters"
Defines device parameters, specifications, and test techniques.
Teledyne Philbrick AN-22 (4pp)

2 **"IC F/V Converters Readily Handle Other Functions, Such as F/V, A/D"**
(RC4151, RM4151)
Describes use of the 4151 as an F/V converter, a V/F converter, and an FSK demodulator.
Raytheon Semiconductor Application Note (6pp)

3 **"Interfacing Precision Monolithics Digital-to-Analog Converters with CMOS Logic"**
(DAC-100, DAC-01)
Analyzes input circuits of these DACs and CMOS interfaces. Describes a complete 10-bit DAC and an 8-bit A/D.
Precision Monolithics AN-14 (4pp)

4 **"Interfacing the AD558 Dacport to Microprocessors"**
(AD558)
Examines considerations for interfacing an 8-bit DAC with the 8080A, 8085A, 8048/8758, 6800/650X and 1802 microprocessors. Example applications include ramp generation and software-controlled analog-to-digital conversion.
Analog Devices (6pp)

5 **"Introduction to Quantized Feedback"**
(LD111A, LD120, LD122, LD130, LD110, LD121A, LD114)
Describes propietary approach to A/D conversion using an analog processor and digital controller and with auto-polarity, auto-zero and ratiometric operation.
Siliconix AN81-2 (10pp)

6 **"Low Cost Four Channel DAC gives BCD or Binary Coding"**
(DAC-08, DAC-20)
Describes the construction of a four-channel digital-to-analog converter using four multiplying DACs, a precision quad op amp, a system IC voltage reference, and a DIP-packaged thin-film resistor network.
Precision Monolithics AN-26 (4pp)

7 **"Low Cost, High Speed Analog-to-Digital Conversion with the DAC-08"**
(DAC-08)
Discusses the successive approximation technique to A/D and describes three designs with conversion times of 1, 2, and 4 μsec.
Precision Monolithics AN-16 (7pp)

8 **"Methods for Generating Complex Waveforms and Vectors Using Multiplying D/A Converters"**
(AD7544)
Describes analog waveform synthesis using CMOS multiplying D/A converters, including staircase, triangle and sawtooth waveforms.
Analog Devices (6pp)

9 **"Microprocessor Interface Techniques as Applied to the Siliconix A/D Converter Family"**
(L121A, LD130)
Discusses cost and speed advantages of using A/D converters instead of a peripheral interface device for synchronous or asynchronous interface to a microprocessor.
Siliconix AN81-1 (4pp)

Converters (cont)

10 **"Microprocessor Interfacing Using the ZN427/ZN428 Data Converters"**
(ZN427, ZN428)
Demonstrates the design of an analog I/O system using A/D and D/A converters with 6800 and 8085A microprocessors. Includes circuit, timing and logic flow diagrams plus example programs.
Ferranti Application Notes 10, 11 and 12 (28pp)

11 **"Microprocessor Interfacing Using the ZN432 10-Bit ADC"**
(ZN432)
Describes a 10-bit A/D converter IC and techniques for interfacing with 8-bit microprocessors using a minimum of external discrete components and standard TTL logic elements.
Ferranti Electric AR-16 (9pp)

12 **"Power D/A Converters Using the IH8510"**
(IH8510, AH8520, IH8521, 7105, 7120)
Discusses the addition of a power amplifier to a D/A converter. Briefly describes use for motor control and programmable power supplies.
Intersil A021 (4pp)

13 **"Principles and Applications of the ICL7660 CMOS Voltage Converter"**
(ICL7660)
Describes operation and application of a monolithic voltage converter that provides a complementary voltage output of − 1.5V to − 10V with a + 1.5V to + 10V input.
Intersil A051 (8pp)

14 **"Principles of Data Acquisition and Conversion"**
Discusses basic principles of analog to digital systems including sampling rate, aperture error, accuracy, resolution, throughput, and codes.
Burr-Brown AN-79 (5pp)

15 **"RC4151/52/53 Voltage-to-Frequency Converters"**
(RC4151, RC4152, RC4153)
Describes the principles of operation and applications involving data conversion, data transmission, motor speed controls and other uses for VFCs.
Raytheon Semiconductor AN25 (32pp)

16 **"Remote Control Dual Range A/D Converter Using the 7106"**
(7106)
Discusses design of a remote-control, dual-range voltage-measuring circuit using a A/D converter-display driver chip.
Teledyne Semiconductor AN-13 (1pp)

17 **"Repetitive Mode Operation for Models 4109/4111 Integrating A/D Converters"**
(4109, 4111)
Runs through external trigger generator and sure start circuit schemes which are used when the devices must run without ceasing to convert.
Teledyne Philbrick AN-28 (2pp)

18 **"Selecting A/D Converters"**
Compares and contrasts successive approximation and integrating A/D conversion techniques with respect to speed, accuracy, and cost.
Intersil A016 (6pp)

INTERFACE

Converters (cont)

1 **"Serial to Parallel Conversion"**
(MN502, MN5200, MN5210)
Covers timing consideratins in the conversion of A/D converter output from serial to parallel form.
Micro Networks AN-106 (2pp)

2 **"Software Controlled A/D Conversion Using DAC-08 and the 8080A Microprocessor"**
(DAC-08)
Describes software controlled, 8-bit A/D conversion using the DAC-08 and the 8080A. Subjects include I/O interface considerations, I/O control using memory mapping, and a successive approximation A/D conversion algorithm.
Precision Monolithics AN-22 (4pp)

3 **"Solve Your Measurement Problems"**
Discusses V/F and F/V converters and their use in data acquisition problems.
Teledyne Philbrick AN-20 (6pp)

4 **"Specifying and Testing Analog-to-Digital Converters"**
Defines the basic parameters, specifications, and test methods.
Teledyne Philbrick AN-24 (7pp)

5 **"Specifying and Testing Digital-to-Analog Converters"**
Defines basic parameters, specifications and test methods.
Teledyne Philbrick AN-25 (7pp)

6 **"Specifying and Testing Sample-Hold Amplifiers"**
Defines various sample-hold amplifier parameters and outlines methods of testing for them.
Teledyne Philbrick AN-30 (5pp)

7 **"Squeeze High Performance Out of Low-Cost Hybrid Data Converters"**
Lists ways in which converter performance can be improved by the addition of a few external components.
Burr-Brown AN-86 (4pp)

8 **"Static and Dynamic Testing of Digital-to-Analog Converters"**
Describes test procedures and equipment for measuring offset, full-scale, gain and linearity errors in DACs. Test equipment discussed ranges from DVMs to automatic testers.
Burr-Brown AN-99 (6pp)

9 **"Strobing the DAC-08 Under Logic Control"**
(DAC-08)
Gives connections for strobing the output of this DAC.
Precision Monolithics AB-1 (1pp)

10 **"Successive Approximation A/D Conversion"**
(MC1408, MC14559)
Describes advances in successive approximation techniques with emphasis on SARs (Successive Approximation Registers.) Shows both a normal and a high speed A/D using these methods.
Motorola AN-716 (8pp)

Converters (cont)

11 **"TSC7135 to 6502/6522 Microprocessor Measurement System"**
(TSC7135)
Describes use of the TSC7135 A/D converter in an interrupt driven measurement system that requires only one 6522 I/O port.
Teledyne Semiconductor AN16

12 **"The 4151 Voltage to Frequency Converter"**
(RC4151, RM4151, RV4151)
Describes various uses of this v/f and f/v converter.
Raytheon Semiconductor Application Note (8pp)

13 **"The ICL7104—A Binary Output A/D Converter for μ Processors"**
(ICL7104, ICL8052, ICL8068)
Describes the operation of the ICL7104, and either the ICL8052 or ICL8068, as a dual-slope integrating converter.
Intersil A030 (14pp)

14 **"The Integrating A/D Converter"**
Discusses the dual slope technique with considerable attention to error analysis.
Intersil A017 (4pp)

15 **"The Multiplying DAC Application Guide"**
(AD7520, AD7521, AD7522, AS7523, AD7524, AD7525, AD7530, AD7531, AD7533, AD7541)
Discusses applications which take advantage of the MDAC's ability to accept AC or DC references, which can be of either polarity. Applications include digitally-controlled gain and attenuation circuits.
Analog Devices (40pp)

16 **"The OP-17, OP-16, OP-15 as Output Amplifiers for High Speed D/A Converters"**
(DAC-08, DAC-20, DAC-76, OP-15, OP-16, OP-17)
Illustrates design of high speed, voltage output D/A converters using these devices. Circuit diagrams for high speed, low drift, and low power applications are provided.
Precision Monolithics AN-24 (3pp)

17 **"Tips for Using Single-Chip 3½ Digit A/D Converters"**
(ICL7106, ICL7116, ICL7107, ICL7117, ICL7126)
Provides answers to commonly asked questions regarding A/D converter application in display systems. Includes troubleshooting guide, normal waveforms and equations for component values.
Intersil A052 (8pp)

18 **"Understanding the Auto-Zero and Common-Mode Performance of the ICL7106/7107/7109 Family"**
(ICL7106, ICL7107, ICL7109)
Shows how to avoid application problems with differential-input A/D converters having differential reference and separate analog and digital ground references.
Intersil Application Bulletin A032 (8pp)

19 **"V/F's and F/V's: Simple Solutions to Everyday Conversion Problems"**
Examines applications of V/F's and F/V's. Also demonstrates how accuracy can be improved with the addition of more components.
Teledyne Philbrick AN-32 (7pp)

20 **"VFC32 Operation at 500 kHz"**
(VFC32)
Explains the operation of the VFC32 voltage-to-frequency converter at 500 kHz. Four interface circuit configurations are given.
Burr-Brown AN-109 (2pp)

© IC MASTER 1984

INTERFACE

Converters (cont)

1 **"Voltage Transients (Glitches)"**
(MN3008)
Discusses D/A converter analog voltage spikes appearing in the output following a change of input code.
Micro Networks AN-101 (2pp)

2 **"What Designers Should Know About Data-Converter Drift"**
Examines components of drift as they apply to A/D and D/A converters. Includes discussion of the effect of reference drift and computation of worst case error.
Burr-Brown AN-89 (4pp)

3 **"When Should a Sample Hold Amplifier be Used?"**
Covers the use of sample-hold amplifiers with A/D converters. Discusses use with dynamically changing signals and the droop rate of the sample-hold circuit.
Micro Networks AN-103 (2pp)

Data Transmission

4 **"Manchester Terminal Unit in CMOS LSI"**
(HD15530, HD15531)
Details the use of the HD15530 and HD15531 CMOS Manchester encoder/decoders in a MIL-STD-1553 environment. Includes an overview of MIL-STD-1553, operation of the devices, and circuit implementations.
Harris Semiconductor AR-12

5 **"2661 Operating Mode Switching Procedures"**
(2661)
Covers methods for switching the 2661 Enhanced Programmable Communications Interface from echoplex or remote loop-back mode to normal operation and vice versa.
Signetics AN-402 (1pp)

6 **"A 20-Mbaud Full Duplex Fiber Optic Data Link Using Fiber Optic Active Components"**
(SN74LS40B, MF0D4-02F, MC1733, MC75107)
Describes the design, construction, testing and performance of a TTL-compatible, optical data link. Includes schematic, parts list and printed circuit artwork.
Motorola AN-794 (28pp)

"A COS/MOS PCM Telemetry and Remote Data Acquisition Design"
See listing under (Digital) CMOS (RCA)

"A Typical Data-Gathering and Processing System Using CD4000A-Series COS/MOS Parts"
See listing under (Digital) CMOS (RCA)

7 **"An Introduction to the Video Interface System (VIS) Devices - CDP1869 and CDP1870"**
(CDP1869, CDP1870, CDP18S020)
Describes circuit and software for mating a video-interface chip set to the CDP18S020 evaluation kit for assessing chip-set capability in the video portion of a CRT terminal.
RCA ICAN-6953 (11pp)

Data Transmission (cont)

8 **"Applying the HI5900 Analog Data Acquisition Signal Processor"**
(HI5900)
Discusses uses and interfaces for a fully integrated hybrid analog "front-end" for a data acquisition system.
Harris Semiconductor AN-527 (4pp)

9 **"Asynchronous Receiver/Transmitter"**
(TR1602, TR1865)
General description of asynchronous transmission and operation of TR1602, which is capable of full or half duplex operation. Describes application in distributed computer networks.
Western Digital Application Report 1 (12pp)

10 **"Binary Synchronous Communications"**
(2661, 2653)
Covers procedures and hardware for implementing character-oriented and bit-oriented protocols in a data communications network.
Signetics TB-4001 (3pp)

11 **"Building a Complete FSK Modem Using XR-2211 and XR-2206"**
(XR2206, XR2211)
Describes the construction of a modem system using frequency shift keying for serial data transmission.
Exar AN-20 (4pp)

12 **"Bussing with MECL 10,000 Integrated Circuits"**
(MC10111, MC10123)
Describes use of MECL 10,000 circuits in high speed data transmission systems with emphasis on transmission line construction and termination.
Motorola AN-726 (6pp)

13 **"Convolution: Digital Signal Processing"**
Discusses the impulse function and its effect on linear systems in terms of the fundamental convolution theorem. Analytical and illustrative examples.
National Semiconductor AN237 (8pp)

14 **"Data Bus and Differential Line Drivers and Receivers"**
(DS7820, DS7830, DS7831, DS7832, DS7833, DS7834, DS7835, DS7836, DS7837, DS7838, DS7839, DS8820, DS8830, DS8831, DS8832, DS8833, DS8834, DS8835, DS8836, DS8837, DS8838, DS8839, DS1488, DS1489)
Includes schematics and describes the operation of these line drivers, receivers and transceivers.
National AN-83 (12pp)

15 **"Data Comm Async and Sync Transmission"**
(2661, 2652, 2681)
Reviews fundamental considerations and describes controller chips for implementing synchronous and asynchronous data transmission.
Signetics TB-4004 (3pp)

16 **"Data Comm Error Control"**
(2652, 2653, 2661)
Describes chip set for implementing error control at system protocol levels in data communication systems.
Signetics TB-4003 (3pp)

INTERFACE

Data Transmission (cont)

1 **"Data Comm Protocols"**
(2652, 2653, 2661)
Discusses procedures, conventions and hardware governing data transfer between data-processing machines.
Signetics TB-4000 (2pp)

2 **"Device Operation and System Implementation of the Asynchronous Communications Interface Adapter"**
(MC6850)
Provides information on ACIA transmitter and receiver operation, initialization, status register bits, use in a microcomputer based communications system, software requirements, and transmission subroutines.
Motorola AN-754 (11pp)

3 **"Digital Data Comm Message Protocol"**
(2652, 2661, 2653)
Covers operating modes, format, control set, error detection and recovery, and implementation of message protocols.
Signetics TB-4005 (3pp)

4 **"Eight Channel Codec Demonstrator"**
Explains how a codec demonstrator system is used to provide a working digital transmission system incorporating eight analog input channels digitally interfacing to eight output channels.
Precision Monolithics AN-37 (8pp)

5 **"FOT/FOR110 Link Length Calculations"**
(FOT110, FOR110)
Transmitter output power, receiver sensitivity, and optical fiber characteristics are all taken into account in determining the maximum length achievable in a fiber optic link. Four sample calculations are given.
Burr Brown AN-111 (4pp)

6 **"Fiber Optic Transmitter Accepts Most Analog Signals"**
(3714T)
Describes the capabilities of the 3714T fiber optic transmitter and its applications in the transmission of low-level analog signals in hostile environments. Various implementations for different system requirements are discussed.
Burr-Brown AN-110 (7pp)

7 **"Four-Channel Shared Codec"**
(DAC-86, DAC-87)
Describes a four-channel CODEC assembled from LSI components as a cost-effective digital transmission system requiring a relatively small number of devices. The system makes use of a single COMDAC® companded DAC-86 or DAC-87 digital-to-analog converter for both encoding and decoding.
Precision Monolithics AN-38 (6pp)

8 **"High Speed Digital Communications"**
(HD245, HD246, HD545, HD546)
Describes the use of the HD-245 family in a current mode digital communication system (up to 2 Mbs over 1,000-ft-long line.)
Harris Semiconductor AN-205 (4pp)

9 **"Integrated Circuits for Digital Data Transmission"**
(DS7820, DS7830, DS8820, DS8830)
Describes the operation and use of the DS7830 line driver and DS7830 line receiver for transmission systems using twisted-pair lines. Includes a mathematical design analysis of this line receiver.
National Special Functions Databook AN-22 (16pp)

Data Transmission (cont)

10 **"Low Speed Modem Fundamentals"**
(MC6860)
Describes interface circuitry and performance of the MC6860 low speed modem. Evaluation of the system performance in the presence of Gaussian noise is given, as well as a brief description of data couplers.
Motorola AN-731 (15pp)

11 **"Low Speed Modem System Design Using the MC6860"**
(MC6860)
Describes the MC6860 modem. Provides filter design tables and equations to develop a complete 100 series compatible system.
Motorola AN-747 (13pp)

12 **"Manchester II Transfers Data with Integrity, Speed"**
(HD6409)
Discusses Manchester serial data transmission theory, offers comparisons between industry standard codes, and describes operation of the HD6409.
Harris Semiconductor AR-14

13 **"Mixed Data Link Extends Length, Reduces Cost"**
(3712R, 3713T)
Describes how to use a fiber-optic transmitter and receiver to form a fiber-optic data link for extending link length or reducing link cost. Provides a performance chart for comparing various cable types.
Burr-Brown AN-97 (4pp)

14 **"Monolithic Bipolar Circuits for Video Speed Data Conversion"**
(TDC1007J, TDC1016J)
Describes the "flash" A/D converter, TDC1007J, and the TDC1016J, D/A converter. Also included are appoaches for extending the performance of the TDC1007J.
TRW/LSI A-5

15 **"Operation of the MC14469"**
(MC14469)
Discusses the operation of an addressable asynchronous receiver transmitter and its application in control of remote devices, transfer of data on a shared wire, and as an interface from remote sensors to a central processor.
Motorola AN-806 (8pp)

16 **"Operational Aspects of Nitron's Data Terminal Transmitter and Receiver"**
(NC2257, NC2259, NC2260)
Discusses basic operation of the NC2257/2259/2260 IC's, and application in various types of communications systems.
Nitron Communications Note 1 (24pp)

17 **"PABX Circuit Line Using the AMS2002"**
(AMS2002)
Outlines a typical PABX line circuit design using the AMS2002 subscriber line interface circuit. Focuses on performance parameters that are influenced by the choice of external components.
Aptek Microsystems (3pp)

18 **"Receiver/Transmitter Noise Immunity"**
(HD245, HD246, HD545, HD546)
Discusses HD-245 transmitter/receiver system noise: External magnetic and capacitive effects, crosstalk, and ground line noise. Includes a comparison with voltage mode and differential voltage switching type systems.
Harris Semiconductor AN-207 (4pp)

© IC MASTER 1984

INTERFACE

Data Transmission (cont)

1 **"Revised Data—Interface Standards"**
(MC3486, MC3487, MC3488)
Compares RS232, RS422, and RS423 standards and discusses cable length.
Motorola AN-781 (4pp)

2 **"Stable FSK Modems Featuring the XR-2207, XR-2206, and XR-2211"**
(XR2206, XR2207, XR2211)
Describes designing a modulator-demodulator for use in frequency-shift keying. Circuit designs and the adjustment procedure for frequency tuning is included.
Exar AN-01 (5pp)

3 **"Successive Approximation Register Design for Multi-Channel Codec's"**
Explains a low cost, high speed Successive Approximation Register (SAR) design for use with 24-channel or 32-channel encoders.
Precision Monolithics AN-31 (4pp)

4 **"Synchronous Data Link Control (SDLC)"**
(2652)
Reviews protocols used in data communications networks; discusses message format, error detection and the operation of a controller chip.
Signetics TB-4002 (4pp)

5 **"The UAR/T in Data Communications"**
(AY5-1013)
Describes this full duplex receiver/transmitter and discusses its application in computer, terminal and slow speed device interfacing. Also covers use in polling.
General Instrument (4pp)

6 **"Transmission Line Characteristics"**
(DM7400, DS7820, DS7830, DS75452, DS8820, DS8830)
Describes the characteristics of digital signals in transmission lines and the characteristics of the line that effect transmission quality. Also compares the performance of unbalanced and balanced circuits in digital systems.
National Interface Databook AN-108 (6pp)

7 **"Transmission Line Drivers and Receivers for RS-422 and RS-423"**
(9636A, 9637A, 9638)
Reviews requirements of EIA standards RS-422 and RS-423 for interfacing data terminals and data-communications equipment with transmission live drivers and receivers. Describes theory and application of Schottky driver and receiver circuits. Circuit diagrams, performance curves and tables, and system design assistance are provided.
Fairchild Application Note 354 (16pp)

8 **"Transmission and Multiplexing of Analog or Digital Signals Utilizing the CD4016A Quad Bilateral Switch"**
(CD4016A)
Describes features and operation of this switch. Discusses applications, including switching, gating digital or analog signals, multiplexing and demultiplexing, D/A conversion, sample and hold, and squelch-control.
RCA ICAN-6601 (12pp)

Data Transmission (cont)

9 **"Tri-State FSK Modem Design Using XR2206/XR2211"**
(XR2206, XR2211)
Design of FSK modems with carrier detection and control capability are discussed.
Exar AN-05 (6pp)

10 **"Understanding the FOT110 Fiber Optic Transmitter"**
(FOT110)
Reviews the operating parameters and features of the FOT110 fiber optic transmitter. Outlines the differences of the KG and KG-IR versions in output wavelength, power, and speed. Fiber selection and connector maintenance are also covered.
Burr-Brown AN-108 (4pp)

11 **"Use of the AM26LS29, 30, 31, and 32 Quad Driver/Receiver Family in EIA RS-422 and 423 Applications"**
(AM26LS29, AM26LS30, AM26LS31, AM26LS32)
Reviews use of the devices in implementing RS-422 and 423 with emphasis given to the EIA RS-422 balanced interface.
Advanced Micro Devices (12pp)

12 **"Using the 2653 Polynomial Generator and Checker"**
(2653)
Describes techniques and hardware for monitoring parallel data transfer between a CPU or memory and a serial receiver/transmitter or other bus oriented device.
Signetics AN-400 (16pp)

13 **"Using the 2670/71/72/73 CRT Terminal Chip Set"**
(2670/71/72/73)
Reviews major elements of a CRT terminal and covers the application of a display character and graphics generator, a programmable keyboard and communication controller, a programmable video timing controller and a video and attributes controller.
Signetics AN-401 (16pp)

Drivers

14 **"AC Plasma Displays"**
Discusses the construction and application of flat-panel gas-discharge ac plasma dislays. Includes driver circuit requirements and data coupling/timing considerations.
Texas Instruments CL-401A (10pp)

15 **"Driving Vacuum Fluorescent Displays"**
(UCN4810, TL4810A, SN75512A, SN75513A, SN75501C)
Describes principles of vacuum fluorescent displays including construction and performance trade-off; also discusses interface driver/circuit requirements and features.
Texas Instruments SCA-208 (16pp)

16 **"7106/7107 Digital Meter Applications"**
(7106, 7107)
Presents diagrams, circuit board design, test information and sources of supply for building LED or LCD digital meters around display driver ICs.
Teledyne Semiconductor AN-11 (6pp)

INTERFACE

Displays (cont)

1 **"A Dot Matrix Controller System Design Using the 10938/10939 Display Drivers and R6500/1EB Microcomputer"**
(10938, 10939, R6500/1)
Explains how the 10938/9 dot matrix display controller chip set can be used to drive a 40-character, 5x7 dot matrix vacuum fluorescent display. Operation of the general-purpose MOS/LSI controller chip set is explained, a demonstration system is described, and several methods are given for software control of display drivers and output.
Rockwell No. 2163 (4pp)

2 **"A New Driver Circuit for Displays"**
(U1096B)
Explains how the U1096B universal integrated driver component can be used to control high-resolution LED displays.
AEG-Telefunken SI 5.81 (9pp)

3 **"A Single IC Digital Thermocouple Thermometer Using the 7106"**
(7106)
Describes design and application details of a thermometer circuit built around a display driver and for use with type J and K thermocouples.
Teledyne Semiconductor AN-12 (2pp)

4 **"An IC Driver for a PM Bifilar Stepping Motor"**
(UCN-4202A)
Describes a custom circuit and its application in a stepping motor interface.
Sprague TP80-4 (2pp)

5 **"CMOS Line Drivers"**
States reasons for using CMOS line drivers.
National AN-158 (4pp)

6 **"CRT Display Basics"**
(SND5027, SND5037, SND8002)
Reviews the basics of CRT operation, and discusses applications of the SND5027/5037/8002 display drivers.
Solid State Scientific AN-304 (6pp)

7 **"Driving 7-Segment Gas Discharge Display Tubes with National Semiconductor Circuits"**
(DS8880, DS8884A, DS8885, DS8887, DS8889, DS8980, DS8981)
Explains each of the device's characteristics and operation. Application circuit diagrams also supplied.
National Interface Databook AN-84 (4pp)

8 **"Driving 7-Segment LED Displays with National Semiconductor Circuits"**
(DM5446A, DM5447A, DM5448A, DM7446A, DM7447A, DS75491, DS75492, DS7856, DS7858, DS8856, DS8857, DS8858, DS8861, DS8863, DS8864, DS8865, DS8866)
Discusses configurations and construction of 7-segment LEDs and drive modes. Describes BCD to 7-segment decoder drivers, BCD to 7-segment LED drivers, MOS to LED segment drivers, four and five segment drivers, as well as digit drivers. Describes calculator and digital clock applications.
National AN-99 (12pp)

Displays (cont)

9 **"Driving Burroughs' Bar Graph Display"**
Shows the use of comparators and flip-flops to drive these displays.
National DB-4 (2pp)

10 **"Expanding the Frontiers of IC Interface for Electronic Displays"**
Presents interface IC basics concerning incandescent, gas discharge, LED, plasma, fluorescent, and hot wire displays.
Sprague Electric AN29304.9 (10pp)

11 **"Hermetic BiMOS ICs"**
(UCS-4401H, UCS-4801H, UCS-4807H, UCS-4808H, UCS-4810H, UCS-4815H, UCS-4820H)
Presents simplified applications of BiMOS power drivers in interfacing with printers, displays, and motors.
Sprague WR-198 (6pp)

12 **"Interface Considerations for Numeric Display Systems"**
(MC14511, MC14543)
Gives basic information on LDC, LED, gas discharge, fluorescent and incandescent displays. Discusses interfacing 7 segment displays to logic with emphasis on multiplexed systems.
Motorola AN-741 (25pp)

13 **"Interface ICs for Motor Drive Applications"**
(UCN-4202A, UDN-2949Z, ULN-3701Z, ULN-2800A, UDN-2980A, UDN-2580A, UDN-2845B, UDN-2846B)
Presents simplified applications for monolithic bipolar ICs in driving stepper motors, ac and dc motors, and brushless dc motors.
Sprague WR-185 (7pp)

14 **"Line Driver and Receiver Considerations"**
(MC1488, MC1489, MC3486, MC3487, MC3488, MC10194, MC75107, MC75110)
Discusses line driver and receiver related topics including system description, definition of terms, important parameter measurements and application example.
Motorola AN-708A (18pp)

15 **"MOS Clock Drivers"**
(MH0007, MH0009, MH0012, MH0013)
Lists the characteristics of various MOS clock drivers and how they differ in their input stages.
National Special Functions Databook MB-9 (2pp)

16 **"New Power-Interface ICs"**
(UDN-2585A, UDN-2595A, UDN-6514A, UDN-2541B)
Provides overview of new monolithic bifilar ICs for high-current or high-voltage, medium-power switching applications.
Sprague TP83-10 (8pp)

"PIN Diode Drivers"
See listing under (Interface) Switches. (National)

17 **"Self-Scanned Cascade Readout of the LS7060 and LS7061"**
(LS7060, LS7061)
Describes two 32-bit binary counter-latch-output driers and their use in system-oriented pulse counting applications.
LSI Computer Systems (3pp)

© IC MASTER 1984

INTERFACE

Displays (cont)

"Series ULN-2000A Darlington Transistor Arrays-Description and Application"
(ULN-2001A, ULN-2002A, ULN-2003A, ULN-2004A)
Describes circuit capabilities and its use as an interface.
Sprague AN29304.9 (7pp)

2 **"Simple Voltmeter Monitors TTL Supplies"**
(LM3914)
Explains how to use a bar/dot display driver chip, a few resistors and some LEDs to make a simple expanded-scale voltmeter that runs on 5V and provides TTL undervoltage and overvoltage warning signals.
National Semiconductor Linear Brief 48 (2pp)

3 **"Solving the Stepper Motor Interface Problem"**
(SI7250)
Discusses the application of the SI7250 H-Bridge predriver and controller and MOSPOWER devices to efficient interfacing of a TTL-level output from a microcontroller to a stepper motor.
Siliconix AN82-1 (4pp)

"Using the MM5704 Keyboard Interface in Keyboard Systems"
See listing under (Digital) Encoders (National)

Encoders

4 **"60 Key Keyboard Encoder Applications Note"**
Describes implementation of keyboard scanning, key debouncing, key encoding, and key data availability indication functions.
Signetics AN-002 (8pp)

5 **"A Single Channel Codec Integrated Circuit"**
(ZNPCM1)
Includes tables of recommended operating conditions, electrical characteristics and pinouts for 24-pin DIP codec. Single-channel, 30-channel, and switching application examples includes circuit and timing diagrams.
Ferranti (15pp)

6 **"AY5-3600 Keyboard Encoder Operation"**
(AY5-3600)
Characterizes the device and supplies a chart of the code assignments it uses.
General Instrument Bulletin 1402 (3pp)

7 **"Asynchronous Communications Interface Adapter"**
(SY6551)
Discusses transmitter and receiver operation, status register operations, programmed reset functions, generation of non-standard baud rates and diagnostic loop-back operating modes of the SY6551.
Synertek AN1 (11pp)

8 **"Control Circuits for LED Scales with Linear and Logarithmic Behavior"**
(U237B, U247B, U257B, U267B)
Discusses circuit design for driving up to 10 LEDs in a linear or logarithmic bar display. Includes suggestions for using various colors for emphasizing selected parts of the display.
AEG-Telefunken Halbleiter Informationsdienst 8.78 (3pp)

Encoders (cont)

9 **"Designing with the HD-0165 Keyboard Encoder"**
(HD0165)
The organization and truth table for this encoder are presented. The use of two circuits for encoding up to 256 keys, battery operation, examples of a teletypewriter keyboard and universal keyboard encoders are described.
Harris Semiconductor AN-204 (8pp)

10 **"ED Family of Remote Control Encoder/Decoders"**
(ED-5, ED-9, ED-11, ED-15)
Describes how to incorporate the ED-15, ED-11, ED-9, and ED-5 into user's system. Contains information covering various transmission media, as well as using ED with microprocessor interface.
Supertex 1 (9pp)

11 **"Exclusive-OR Code Converters"**
(DM7086)
Covers use of exclusive-OR gates to do Gray/Binary and Binary/Hamming code conversion.
National DB-2 (2pp)

12 **"Interface Circuitry and Performance Optimization TMX2141 Encoder, TMX2151 Decoder"**
(2141, 2151)
Provides design notes including pulse width and timing considerations for these pulse width signaling devices.
TMX Bulletin 751 (7pp)

13 **"Keyboard Encoder and PROM/EPROM Application"**
(AY5-3600)
Describes use of the device in 64 key 4 mode and 90 key 4 mode applications. The device's binary outputs are organized to provide direct interface with a PROM/EPROM thus enabling the specific pattern format to be verified prior to a "custom" encoder commitment.
General Instrument Bulletin 1401 (4pp)

14 **"Using the MM5704 Keyboard Interface in Keyboard Systems"**
(MM5704)
Discusses features, operation, and programming of this device. Discusses use with the MM5702 timing and control chip of the Microprogrammable Arithmetic Processing System, and in a standard ASCII encode system.
National AN-52 (11pp)

MOS/Bipolar

"Applications of the RCA CD4093B COS/MOS Schmitt Trigger"
See listing under (Digital) CMOS (RCA)

15 **"COS/MOS Interfacing Simplified"**
(CD4000 Series)
Covers interfacing 4000A and B series with TTL, DTL, ECL, NMOS, PMOS, industrial and power control circuits, op amps and displays.
RCA ICAN-6315 (7pp)

16 **"Combining HNIL and CMOS—An Optimum Design Technique"**
(300 Series)
Discusses noise immunity, HNIL/74C interface, Schmitt trigger input and high current output.
Teledyne Semiconductor Digital Catalog (3pp)

INTERFACE

Displays (cont)

"Interfacing COS/MOS with Other Logic Families"
See listing under (Digital) CMOS (RCA)

"Interfacing with CMOS"
See listing under (Digital) CMOS (Solid State Scientific)

1 **"MM54C/MM74C Voltage Translation/Buffering"**
(MM54C901, MM54C902, MM54C903, MM54C904, MM74C901, MM74C902, MM74C903, MM74C904)
Interfacing PMOS to CMOS, CMOS to CMOS with different voltage levels, and CMOS to two standard TTL loads, are illustrated using 74C901 series devices.
National MB-18 (2pp)

2 **"TTL to MOS and MOS to TTL Interface Circuits"**
(SN7400, SN5107, SN75207, SN75270, SN75370, SN75450, SN75451, TMS1103, TMS4062)
Describes MOS/TTL interface circuits using bipolar transistors, JFETs, MOSFETs, and ICs.
Texas Instruments Applications Report CA-170 (11pp)

3 **"TTL/MOS/DTL Interfaces"**
Techniques for coupling the above devices and characteristics of the interfaces.
National MB-7 (2pp)

4 **"Using Bipolar Logic to Improve Performance in CMOS and Microprocessor Systems"**
Suggests the use of HiNIL for improving noise performance, input protection, and output drive, and of LP Schottky for improved speed/power.
Teledyne Semiconductor Digital AN-7 (4pp)

Multiplexers

5 **"Single Supply Operation of PMI Multiplexers"**
(MUX-08, MUX-16, MUX-24, MUX-28, MUX-88)
Explains single supply operation as it applies to BIFET and CMOS multiplexers. Common applications are in microprocessor-based, single supply data acquisition systems.
Precision Monolithics AN-32 (2pp)

6 **"Understanding Crosstalk in Analog Multiplexers"**
Explains the three crosstalk components, Satic (CT), Dynamic (DCT), and Adjacent Channel (ACCT) qualitatively and quantitively. The discussion tells what component(s) should be considered in various applications. The qualitative discussion uses both theoretical and empirical information to arrive at conclusions about what performance should be expected.
Precision Monolithics AN-35 (8pp)

Switches

7 **"A New CMOS Analog Gate Technology"**
General discussion of "latch up." Describes "floating body" process, which eliminates this problem.
Intersil AN-A006 (2pp)

Switches (cont)

8 **"A New J-FET Structure—the VARAFET"**
(IT401, IT401A)
Lists advantages of an integrated J-FET switching circuit. Covers cell structure, electrical characteristics and device operation.
Intersil Application Bulletin AO22 (4pp)

9 **"Analog CMOS Switches and Multiplexers"**
(AD7501, AD7503, AD7506, AD7507, AD7510, AD7511, AD7513, AD7516, AD7519)
A Selection Guide for Analog Devices line of multiplexers and switches. Includes data sheets, bonding diagrams, application information and terminology.
Analog Devices (40pp)

10 **"Analog Switches and Their Applications"**
Introduces basic semiconductor theory and discusses in detail FET analog switches. Various circuit combinations including driver cicuits, multiplexing, sample-and-hold circuits, N-path filters, and converters are also analyzed.
Siliconix $7.95 (324pp)

11 **"Analog Switches in Sample and Hold Circuits"**
Covers the effects of FET analog switch current handling capability on settling time and the effects of offset characteristics on sample and hold system accuracy. Describes inverting and non-inverting sample and hold circuits.
Siliconix AN74-2 (4pp)

12 **"Analog-Signal Commutation"**
(MM450, MM451, MM454, MM550, MM551, MM552)
Describes dc characteristics involved in MOS IC switching of analog signals when the signal input range varies between ± 10 v.
National Special Functions Handbook AN-33 (6pp)

13 **"Application of the MC3416 Crosspoint Switch"**
(MC3416)
Describes operation and use of this 4 X 4 balanced cross point switch in telephone applications including PABX. Appendices cover dielectric isolation, SCR action and testing.
Motorola AN-760 (15pp)

14 **"Applications of MOS Analog Switches"**
(LH0014, LH0019)
Discusses basic commutation circuits and describes the use of the LH0014 and LH0019 in linear amplifier applications, including reset functions and chopper circuits. Covers use of MOS switches as suppressed carrier double-sideband modulators and double-side-band demodulators. Also describes a circuit for a phase-locked loop AM-FM detector without tuned circuits.
National Special Functions Databook AN-38 (8pp)

15 **"Applications of the MT8804A 8x4 Analog Switch Array"**
(MT8804A)
Provides functional and parametric details of the MT8804A CMOS analog switch array, an 8x4 device with minimal interchannel crosstalk that lends itself to crosspoint switching applications.
Mitel Semiconductor MSAN-101 (16pp)

© IC MASTER 1984

INTERFACE

Switches (cont)

1 **"CMOS Analog Switches—A Powerful Design Tool"**
Describes CMOS switch construction, characteristics and operating precautions. Applications include: a four channel switch to multiplex a scope input, a low pass filter with digitally controlled frequency response, an amplifier with programmable inputs and gain, a sample and hold circuit, a latching switch, high frequency switching and multiplexer systems.
Siliconix AN75-1 (16pp)

2 **"DG300 Series Analog Switch Applications"**
(DG300, DG301, DG302, DG303, DG304, DG305, DG306, DG307)
Discusses performance characteristics and applications of the DG300 analog switch family. Includes circuit diagrams.
Siliconix AN76-6 (14pp)

3 **"Designing with Monolithic FET Switches"**
Describes MOSFET and JFET switch operation, including driver consideratins.
Siliconix TA73-2 (4pp)

4 **"Driver Circuits for the JFET Analog Switch"**
Discussion and comparison of resistor-coupled diode charge transfer, space transistor charge transfer, and switched resistor driver circuits for JFET switches.
Siliconix AN73-5 (12pp)

5 **"Electronic Switches in NMOS - Silicon Gate Technology"**
(U353M, U354M)
Lists performance parameters for NMOS siligon-gate transistor arrays of up to 5 devices for use as a relay replacement. Includes discussions on electrical principles and large signal operation.
AEG-Telefunken Halbleiter Informationsdienst 11.78 (6pp)

6 **"FETs as Analog Switches"**
General discussion of FET operation: detailed discussion of factors affecting switch performance, including specific load problems and applicable driver circuits.
Siliconix AN72-2 (12pp)

7 **"Features and Applications of RCA IC Zero-Voltage Switches"**
(CA3058, CA3059, CA3079)
Discusses zero-voltage switch operation in general. Operation primarily with thyristors in ac power control and switching applications, including electric heating, oven/broiler control, machine control, light control and industrial systems.
RCA ICAN-6182 (6pp)

8 **"Guide to Analog CMOS Switches and Multiplexers"**
Discusses the dynamic performance of CMOS switches, CMOS protection schemes, and switch/multiplexer terminology. Applications include a sample/hold amplifier, data acquisition system, commutating bandpass filter, and ramp generator.
Analog Devices (8pp)

9 **"High Speed Analog Switches"**
(AM1000, AM1001, AM1002)
Discusses time domain multiplexing, current mode multiplexing, the switching characteristics of the AM1000 JFET switches, and drive circuits.
National AN-53 (6pp)

Switches (cont)

10 **"High Speed MOS Commutators"**
(MM451, MM453, MM454)
Discusses the lowered threshold voltages in commutators, on and off resistances, switching speed, noise and high-frequency noise control.
National Special Functions Databook AN-28 (8pp)

11 **"IC Multiplexer Increases Analog Switching Speeds"**
(DG506, DG181)
Describes single and two level IC multiplexing systems, including the advantages and disadvantages of each.
Siliconix AN73-2 (5pp)

12 **"Interface ICs for Current-Sourcing Applications"**
(UDN-2580A, UDN-2956A, UDN-2980A, UDN-6100A)
Gives basic circuit design ideas using current-sourcing integrated circuits to interface with relays, printers, solenoids, V-F and LED displays.
Sprague WR-189 (10pp)

13 **"PIN Diode Drivers"**
(DH0035, DH003C)
Describes PIN diode switching requirements and application of DH0035 as a driver. Includes discussion of anode ground and cathode ground designs and of repetition rate considerations.
National Special Functions Databook AN-49 (6pp)

"Some Applications of Programmable Power Switch/Amplifier"
See listing under (Linear) Power Control (RCA)

14 **"Specifying and Testing Multiplexers"**
Describes how Teledyne Philbrick defines and measures analog multiplexer parameters with emphasis on CMOS types.
Teledyne Philbrick Applications Bulletin AN-31 (4pp)

15 **"Switching High-Frequency Signals with FET Integrated Circuits"**
(DG133, DG171, DG181, DG200)
Discussion of DG133/171/181/200 as rf switches. Gives equivalent circuits. "Off" isolation and "On" performance data. Applications: control of video monitor and switching between two video cameras.
Siliconix AN73-3 (16pp)

16 **"The IH5009 Series of Low Cost Analog Switches"**
(IH5009 Series)
Describes circuit parameters, logic compatibility, and virtual ground switching applications including 4-channel multiplexer, gain ranging circuit, gain programmable amplifier and 16-channel multiplexer.
Intersil Application Bulletin A0004 (8pp)

17 **"The Versatile DG308 Supercedes 74C901/CD4066 Combination in New Analog Switch Designs"**
(DG308)
The DG308 has an internal level shifter that enables it to replace a pair of chips for switching bipolar analog signals in 4000 Series CMOS logic.
Siliconix DA81-1 (1p)

INTERFACE

Switches (cont)

1 **"The Versatile DG308 Supercedes LM339/CD4066 Combination in New Analog Switch Designs"**
(DG308)
Switching bipolar analog signals in 4000 Series CMOS logic often requires a logic-level shifter between the positive-supply-voltage referenced logic and the plus-minus-supply referenced analog signals. This note shows how the DG308 simplifies logic interfacing by operating directly from a CMOS input.
Siliconix DA81-2 (1p)

2 **"Understanding and Applying the Analog Switch"**
(IH5001, IH5009, IH5025, IH5040)
Compares parameters of analog switches. Applications of several switch families are discussed, including 3-channel differential multiplexer, gain programmable amplifier, gain ranging circuit, sample and hold circuit.
Intersil Application Bulletin A003 (16pp)

3 **"Use CMOS Analog Switches More Effectively When You Consider Them As Circuits"**
(AD7510DI, AD7590DI)
Discusses low-frequency errors in CMOS analog switches due to resistances and current leakage. Focuses on methods of minimizing the effect of variable series-on resistance on circuit accuracy.
Analog Devices (2pp)

4 **"Zero Voltage Switch"**
(U106)
Discusses the feaures of the U106 Triac control circuit. Provides diagrams, schematics, and temperature control, timer, and static switch applications.
AEG-Telefunken (12pp)

LINEAR

Active Filters

5 **"Active Filter Design with IC OP Amps"**
(XR3403, XR4136, XR4202, XR4558)
Provides table of transfer functions and equations for low, high and bandpass filters as well as filter responses for Bessel, Butterworth and Chebychev types. Working schematic of an active filter in a modem application included.
Exar AN-03 (8pp)

"Function Circuits, Design and Applications"
See listing under (Linear) General (Burr-Brown)

Amplifiers, Current

6 **"Application of the LH0002 Current Amplifier"**
(LH0002)
Circuit operation. Describes uses in a differential input-output op amp, booster amplifier, level shifter, pulse transformer driver, and transmission line driver.
National Special Functions Databook AN-13 (4pp)

Amplifiers, Instrumentation

7 **"A User's Guide to IC Instrumentation Amplifiers"**
(AD522)
Explains where and when an instrumentation amplifier may best be employed. Provides basic theory, specifications and examples of use.
Analog Devices (12pp)

8 **"Application of the RCA CA3000 Integrated-Circuit DC Amplifier"**
(CA3000)
Describes circuit and application as modulated oscillator, crystal oscillator, low-frequency mixer, cascaded RC-coupled feedback amp, narrow-band tuned amp, and Schmitt trigger.
RCA ICAN-5030 (11pp)

9 **"Applications of Wide-Band Buffer Amplifiers"**
Describes high and low frequency operation of several wide-band, high-current, unity-gain buffer amplifiers. Discusses application techniques and illustrates their use in driver, sample and hold amplifier, and active filter circuits.
National Semiconductor AN227 (16pp)

10 **"Instrumentation Amplifiers—Versatile Differential Input Gain Blocks"**
(3660)
Describes the feaures and general operation of instrumentation amplifiers. Depicts their use in bridge circuits, in reducing ground loop interference, and in driven guard input circuits.
Burr-Brown AN-75 (6pp)

11 **"Isolation and Instrumentation Amplifiers Designers Guide"**
Primer on the operation, application, and selection of isolation and instrumentation amplifiers.
Analog Devices (20pp)

12 **"OP-10 Instrumentation Amplifier CMRR Versus Frequency Improvement"**
(OP-10)
Discusses optimization of CMRR versus frequency response of a three op amp instrumentation amplifier.
Precision Monolithics AB-2 (1pp)

13 **"Testing of Analog-to-Digital Converters"**
Discusses methods, circuits and instruments for testing accuracy of A/D converters with conversion times under 100μs; includes a circuit for testing high-speed converters with less than 10μs conversion times.
Burr-Brown Research An-100 (6pp)

14 **"The Instrumentation Amp vs the Op Amp; Which, Where, and How to Use Them"**
Compares an op amp connected as a differential amp with an instrumentation amp built from several general purpose op amps. Discusses how to put each one together, and when and where to use them.
Teledyne Philbrick AN-29 (6pp)

© IC MASTER 1984

LINEAR

Amplifiers, Operational

1 **"A High Impedance Hysteresis Circuit"**
(HA-2520, HA-2620)
Describes HA-2520/HA-2620 used as a hysteresis amplifier and covers output voltage limiting.
Harris Semiconductor AN-505 (2pp)

2 **"A Simple Comparator Using the HA-2620"**
(HA-2620)
Describes op amp comparator circuit capable of driving approximately ten logic gates.
Harris Semiconductor AN-509 (1pp)

3 **"A Simple Square-Triangle Waveform Generator"**
(HA-2510, HA-2600, HA-2620)
Circuit for waveform generator using three op amps.
Harris Semiconductor AN-510 (2pp)

4 **"An IC Amplifier User's Guide to Decoupling, Grounding, and Making Things go Right for a Change"**
Contains considerable information on good grounding practices and op amp decoupling.
Analog Devices (8pp)

5 **"An IC Operational-Transconductance-Amplifier (OTA) with Power Capability"**
(CA3094)
Describes what an OTA is and the characteristics of the device. Outlines its use in such consumer applications as a power amplifier and a companion RIAA preamplifier.
RCA ICAN-6077 (12pp)

6 **"Analog Products: Features and Applications"**
Discusses the use of op amps, buffers, and voltage references in instrumentation amplifiers, I/V converters, current transmitters, precision rectifiers, and wien-bridge rectifiers.
Precision Monolithics Inc. (23pp)

7 **"Analysis and Design of the Op/Amp Current Source"**
Develops expressions for the transfer function and output impedance of voltage controlled op amp current source using both ideal and non-ideal models. Discusses effects of parameter and temperature variations on performance.
Motorola AN-587 (7pp)

8 **"Application of the CA080 BiMOS Op Amp Series in Low-Cost Instruments and Audio Circuits"**
(CA080, CA081, CA082, CA083)
Describes the characteristics of CA080 operational amplifiers and their benefits when used in audio preamplifiers, notch filters, low-current amplification circuits, and ac voltmeter front ends.
RCA ICAN-6933 (2pp)

9 **"Application of the RCA CA3008 and CA3010 Integrated-Circuit Operational Amplifiers"**
(CA3008, CA3010)
Describes operating characteristics of two op amps and their application in video amplifiers, frequency-shaping amplifiers, comparators, integrators, differentiators, scaling adders. Also covers the addition of a power output stage and/or input emitter followers.
RCA ICAN-5015 (15pp)

Amplifiers, Operational (cont)

10 **"Application of the RCA CA3015 and CA3016 Integrated-Circuit Operational Amplifiers"**
(CA3015, CA3016)
Describes operating characteristics at ±12 v. Applications covered are: 50-dB amplifier; twin-T bandpass amplifiers, 20-dB, 10 MHz bandpass amplifier; and voltage follower.
RCA ICAN-5213 (6pp)

11 **"Applications of Operational Amplifiers"**
Presents op amp applications including designs for signed controls, processors, waveform generators, and special purpose circuits. Provides information on error sources, circuit values, and design equations.
Burr-Brown $33.50 (220pp)

12 **"Applications of a Monolithic Sample-and-Hold/Gated Operational Amplifier"**
(HA-2420, HA-2425)
Describes HA-2420/2425 circuit. Applications include various track-and-hold/sample-and-hold configurations, an A/D converter, a demultiplexer, an integrated-hold-reset amplifier, a gated operational amplifier, and a peak detector with reset.
Harris Semiconductor AN-517 (8pp)

13 **"Applications of the CA3080 and CA3080A High-Performance Operational Transconductance Amplifiers"**
(CA3090, CA3080A)
This device has an additional control terminal for flexibility. Circuit operation is discussed. Applications covered: communications and industrial systems, modulators, multiplexers, sample and hold circuits, gain control circuits, and micropower comparators. Appendix discusses current mirrors.
RCA ICAN-6668 (16pp)

14 **"Applications of the Gated Linear Amplifier ZN424"**
(ZN424)
Details the operation of the ZN424 and describes a variety of specific applications including filters, comparators, and peak hold circuits.
Ferranti (46pp)

15 **"Applications of the RCA CA3048 Integrated Circuit Amplifier Array"**
(CA3048)
Discusses operating parameters for this 4-amplifier array and covers applications, including Hartley and Colpitts oscillators, an astable multivibrator, four-channel linear mix, and a gain-controlled amplifier.
RCA ICAN-4072 (8pp)

16 **"Applying Dual and Quad FET Op Amps"**
(LF347, LF353)
Shows how dual and quad FET op amps can be used as a temperature controller, high-temperature thermometer, sine wave oscillator, voltage reference, A/D converter and current amplifier.
National Semiconductor AN-262 (7pp)

17 **"Applying a New Precision Op Amp"**
(LM11)
Details characteristics of the LM11 which combines low offset voltage with low bias current. Applications include meters, differential instrumentation amplifiers and coupling with existing fast op amps.
National Semiconductor AN242 (16pp)

Amplifiers, Operational (cont)

1 **"Circuit Design with the Photon-Coupled Interrupter Modules CNY36 and CNY37"**
(TAA861)
Describes how a photocoupler module is combined with an operational amplifier to actuate a relay upon interruption of an infrared light beam.
AEG-Telefunken Halbleiter Informationsdienst 5/76 (4pp)

2 **"Combine Two Op Amps to Avoid the Speed Accuracy Compromise"**
(3521)
Discusses interconnecting low drift and wideband op amps to form a composite op amp.
Burr-Brown AN-64 (2pp)

"D.C. Servo Motor Systems Using the ICH8510"
See listing under (Linear) Amplifiers, Power (Intersil)

3 **"Design of a Unique Precision Controlled Current Source"**
(3500)
Diagrams a current source using an op amp and a complementary FET pair to form a current source with differential input and bipolar current output.
Burr-Brown AN-74 (2pp)

4 **"Designing Junction FET Input Op Amps"**
(U401, 421 Series)
Discusses the advantages, behavior and design of JFET input operational amplifiers.
Siliconix AN74-3 (17pp)

5 **"Designing with Operational Amplifiers: Application Alternatives"**
Amplifier improvement techniques, signal analyzers, signal conditioners, absolute value circuits, signal generators, computing circuits, data transmission circuits, as well as test and measurement circuits are discussed. Circuit designs and explanations of circuit operation are provided.
Burr-Brown $29.50 (220pp)

6 **"Designing with TL080 BIFET Op Amps"**
Describes the performance characteristics of BIFET op amps, and presents examples of compensation approaches with emphasis on feed-forward compensation techniques used in notch filters, oscillators and preamplifiers.
Texas Instruments CA-193 (11 pp)

7 **"Designing with TL080 BiFET Op Amps"**
(TL080, TL070, TL060)
Describes performance characteristics of BiFET op amps, and presents examples of compensation techniques used in notch filters, oscillators and preamplifiers.
Texas Instruments CA-193 (11pp)

8 **"Digital Auto-Zeroing Extends the Capabilities of Semi-Custom CMOS Operational Amplifiers"**
Describes the use of a digital auto-zero technique to reduce the worst-case offset voltage of CMOS metal-gate array op amps to approximately 1 mV. Discusses application of the technique to a heart-rate detector chip.
Telmos AN2 (2 pp)

9 **"Digital Nulling of OP-05 and SSS725"**
(DAC-08, OP-05, SSS725)
Shows digitally controlled offset nulling achieved by imbalancing the first stage collector currents of the op amp with a D/A.
Precision Monolithics AB-3 (1pp)

Amplifiers, Operational (cont)

10 **"Diode-Connected FET Protects Op Amps"**
(BB3528CM)
Shows how to use an FET to protect an op amp from overload in a circuit that measures dielectric properties.
Burr-Brown AN-106 (1pp)

11 **"Fast Settling Operational Amplifier"**
(HA-5190, HA-5195)
Covers operation at elevated temperatures, frequency compensation techniques and performance enhancement methods for op amps used in pulse, RF and video amplifiers, waveform generators, data requisition and instrumentation.
Harris Application Note 525 (4pp)

12 **"HA-909 Operational Amplifier"**
(HA-909, HA-911)
Discusses applications as a unity gain breadboard op amp, servo preamplifier, high-Q bandpass filter, Wien bridge oscillator, and phase-delay filters.
Harris Semiconductor AN-501 (2pp)

13 **"HA-909 Operational Amplifiers Performance Tailoring"**
(HA-909, HA-911)
Discusses how to optimize HA-909's offset, power dissipation, bandwidth, large signal bandwidth, slew rate, transient response, and stability with reactive loads.
Harris Semiconductor AN-502 (3pp)

14 **"How To Select Output Amplifiers for CMOS MDACs"**
(AD542, AD544)
Discusses unique problems of amplifying CMOS, multiplying-DAC outputs. Provides performance comparison of two op amp families to aid in selection.
Analog Devices (4pp)

15 **"How to Test Basic Operational Amplifier Parameters"**
Describes the many pitfalls involved in testing op amp specifications of offset voltage, input bias current, open loop voltage gain, frequency response and CMRR. Includes test-circuit diagrams.
Analog Devices (3 pp)

16 **"IC Power Op Amps (Revised)"**
(μA759, μA791)
Discusses evolution of power op amps with specific reference to the μA759 and μA791. Included are applications to voltage regulators, audio amplifiers and servo motor drivers.
Fairchild AN347 (8pp)

17 **"L144 Programmable Micro-Power Triple Op Amp"**
(L144)
Describes device function, elements of programming, effects of slew rate limiting. Applications discussed include instrumentation amplifier, tone detectors, triple-amplifier active filters, and a micropower double-ended limit detector.
Siliconix AN73-6 (6pp)

18 **"Logarithmic Amplifiers and Operators Parameter Definition and Measurement"**
Defines and explains logarithmic amplifier parameters.
Teledyne Philbrick AN-27 (3pp)

© IC MASTER 1984

LINEAR

Amplifiers, Operational (cont)

1 **"Low Power Operational LH0001 Amplifier"**
(LH0001)
Operation of circuit offering 0.2 mv typical offset voltage at 25 C and quiescent supply currents in 100 μA range.
National Linear Applications Handbook AN-10 (4pp)

2 **"Measurement of Burst (Popcorn) Noise in Linear Integrated Circuits"**
Discusses "pass-fail" criteria and describes a test set-up for measuring burst noise. The set-up includes a high gain amplifier-filter, a bipolar comparator, and a counter-latch-timer control circuit.
RCA ICAN 6732 (8pp)

3 **"Micro Power Applications Collection"**
(OP-20)
Discusses the OP-20 Micro-Power Operational Amplifier as a combination of precision performance, ultra-low supply current and single power supply operation.
Precision Monolithics AN-34 (4pp)

4 **"Minimization of Noise in Operational Amplifier Applications"**
(OP-07)
Describes internal and external sources of noise. Helps to locate noise sources by frequency. Gives examples of noise calculation using the OP-07 as an example.
Precision Monolithics AN-15 (11pp)

5 **"NFET/BIFET Products"**
Description of Texas Instruments' full family of P and N channel op amp/comparator family, with typical application circuits using the advantages of high input impedance, low distortion and low input offset voltage.
Texas Instruments CL-553 (21 pp)

6 **"NFET/BIFET Products"**
(TL081, TL071, TL061, TL087, TL091, TL311, TL068)
Describes TI's complete family of p- and n-channel op amps and comparators with typical application circuits.
Texas Instruments CL-553 (21pp)

7 **"New Design Techniques for FET Op Amps"**
(LH0022, LH0022C, LH0042C, LH0052, LH0052C)
Gives parameters for LH0022, LH0042 and LH0052 operational amplifiers. Discusses rationale for FETs in these devices, describes the circuits. Describes application as voltage followers, integrators, sample/hold amplifiers, comparators, instrumentation and charge amplifiers.
National Special Functions Databook AN-63 (12pp)

8 **"Operational Amplifier Noise Prediction"**
Provides a noise model, a procedure for computing output noise, and spot noise curves for many Harris amplifiers.
Harris Semiconductor AN-519 (10pp)

9 **"Operational Amplifier Parameter Definition and Measurement Guide"**
Defines parameters and means of measuring them.
Teledyne Philbrick AN-23 (8pp)

10 **"Operational Amplifier Stability: Input Capacitance Considerations"**
(HA-2600, HA-2605)
Discusses overcoming stray capacitance in op amps, such as the HA-2600.
Harris Semiconductor AN-515 (2pp)

Amplifiers, Operational (cont)

11 **"Operational Amplifiers—Design and Application"**
Covers basic theory, amplifier design techniques and applications.
Burr-Brown $33.50 (470pp)

12 **"Power Op-Amp Heat Sink Kit"**
(ICH8510, ICH8520, ICH8530)
Discusses mounting the devices on heat sinks.
Intersil Application Bulletin A029 (2pp)

13 **"Precision Op Amp on a Semicustom Chip"**
(MONOCHIP)
Discusses building an op amp on a semicustom chip with performance comparable to standard precision units. Covers all phases of design and thermal considerations as well.
Interdesign APN-9 (10pp)

14 **"Precisional Operational Amplifier"**
(μA714)
Describes operation of the μA714 and compares key parameters with other precision op amps. Discusses applications including use as a replacement for chopper-stabilized amplifiers.
Fairchild AN348 (10pp)

15 **"Protect Op Amps from Overloads"**
Discusses protection from power-supply faults, keeping input voltages at safe levels, and limiting output currents.
Burr-Brown AN-60 (3pp)

16 **"Simple Precision Millivolt Reference Uses No Zeners"**
(OP-05)
Describes −3.5 mv to 3.5 mv reference built with instrumentation op amp and a potentiometer.
Precision Monolithics AN-10 (1pp)

17 **"Some Recent Application Notes on Operational Amplifiers"**
"How to Select Operational Amplifiers" Discusses selection of the right op amp for a specific application. Includes consideration of gain/bandwidth, offset and drift, current amplifiers, and steady-state vs transient applications.
Analog Devices (6 pp)

18 **"Test Procedures for Operational Amplifiers"**
Circuit for measuring offset voltage, bias current, offset current, open loop voltage gain, common mode and power supply rejection ratios, output voltage/current, power dissipation, and making continuity checks.
Harris Semiconductor AN-508 (2pp)

19 **"The 8007—A High Performance FET-Input Operational Amplifier"**
(ICL8007)
Circuit description, applications as log and antilog amplifiers, photocell amplifier, peak detector, sample and hold circuits, high impedance buffer, and Wien Bridge oscillator.
Intersil Application Bulletin A005 (6pp)

20 **"The HA-2400 PRAM Four Channel Operational Amplifier"**
(HA-2400, HA-2405)
This is a programmable input stage, operational amplifier. This note describes its applications including an analog multiplexer with buffered input and output, an inverting or non inverting amplifier with a programmable gain, a sine wave oscillator with programmable frequency, and a track and hold/sample and hold circuit.
Harris Semiconductor AN-514 (8pp)

IC MASTER

INTERNATIONAL DISTRIBUTORS

ARGENTINA, COLUMBIA, ECUADOR, VENEZUELA, MEXICO, PERU
Intectra
2629 Terminal Blvd.
Mt. View, CA 94043
Tel. (415) 967-8818

AUSTRALIA
A J Distributors Pty Ltd.
P.O. Box 71
Prospect, S. Australia 5082
Tel. 269-1244
Telex (790) 82635

AUSTRIA
Becos Electronic Ges. M.G.H.
Gablenzgasse 52
A-1160 Vienna, Austria
Tel. 0222/959145
Telex (847) 134606

BELGIUM
J. P. LeMaire S.A.
Limberg, Stirum 243
1810 Wemmel, Belgium
Tel. 02/4784847
Telex (846) 24610

BRAZIL
Filcres Importacao
Rua Aurora
CEP 01209
Caixa Postal 18767
Sao Paulo, Brazil
Tel. (011) 223 7388
Telex (391) 113298

CANADA
Future Electronics
237 Hymus Blvd.
Pointe Claire
Quebec H9R 5C7
Canada
Tel. 514-694-7710
TWX: 610-421-3251
Telex 05-823554

DENMARK
Advanced Electronik
55, Mariendalsvej
DK2000, Copenhagen F, Denmark
Tel. 01 194433
Telex (855) 22431

ENGLAND
Paterson/Steadman & Partner Ltd.
The Hub
Emson Close
Saffron Walden, Essex
CB10 1HL, England
Tel. 27067
Telex (851) 81653

J. B. Tratsart Ltd.
Dogmersfield Nr.
Baskingstroke
Hampshire RG27 8SU, England
Tel. 02514 3334
Telex (851) 916196

FINLAND
ITT Multikomponent
Tyopajakatu 5
PL107,00501
Helsinki 50, Finland
Tel. 739100
Telex (857) 121450

FRANCE
Conseilet Promotion
28 Rue de la Procession
92150 Suresnes, France
Tel. 5064275
Telex (842) 614596F

HOLLAND
Manudax-Nederland B.V.
54732G Heeswijk (N.B.)
Meerstraat 7, Holland
Tel. 04139 2901
Telex (844) 50175

HONG KONG
Conmos Products, Ltd.
Haynein Bldg., 11th Floor
1 Tai Yip Street
Keun Tong, Kowloon, Hong Kong
Tel. 3-684572
Telex (780) 85448

INDIA, MALAYSIA, SINGAPORE, THAILAND
Radio & Craft Publications
4794/23 Bharat Ram Road
Daryanganj, New Delhi 2, India
Tel. 277147

ISRAEL
STG International Ltd.
10 Humberman Street
P. O. Box 1276
61012 Tel Aviv, Israel
Tel. 248231
Telex (922) 342229

ITALY
Gruppo Editoriale Jackson S.R.L.
Via Rosellini 12
20124 Milan, Italy
Tel. 68 80951
Telex (843) 315366

JAPAN
Asahi Glass Company, Ltd. Electronic Components Group
1-2 Marunouchi 2-chome
Chiyoda-ku, Tokyo 100, Japan
Tel. (03) 218-5813
Telex (781) TK4616

Overseas Data Service Co. Ltd.
Shugetsu Building No. 12-7
Kita-Aoyama 3-chome
Minato-ku, Tokyo 107, Japan
Tel. (03) 400-7090
Telex (781) J26487

Tokyo International Communications Inc.
Miyajima Bldg.
28 Yoyogi 1-chome,
Shibuya-ku
Tokyo 151, Japan
Tel. 379-2561
Telex (781) 33106

NORWAY
Fagbokservice A.S.
Ekebergn, 130B
Box 94
Bekkelagshogda, Oslo 2, Norway
Tel. (02) 282237

SOUTH AFRICA
Suntronika
Dargene House,
10 Station Street
Braamfontein, Johannesburg
South Africa
Tel. 725-1210
Telex (960) 4-24143

SPAIN
Sagitron
Castello 25, 2, °
Madrid 1, Spain
Tel. 402 6085
Telex (831) 43819

SWEDEN
Fertronic AB
Snormakarvagen 35
Box 56,
16126 Bromma, Sweden
Tel. 08/252610
Telex (854) 11181

SWITZERLAND
W. Stoiz AG
Taefernstrasse 15
CH-5404 Baden-Daettwil
Switzerland
Tel. 056 840151
Telex (845) 54070Z

TAIWAN
Helm Engineering & Trading Co.
49 No. 143 Section 4
Hsin Yi Rd.
Taipei, Taiwan, ROC
Tel. 709-1888
Telex (785) 28204

TURKEY
EMPA Elektronik (Mamulleri Pazarlama AS)
Tersane Cad. Kuthan 38/408
Tr-Kara Koy — Istanbul, Turkey
Tel. (11) 496249
Telex 24429

WEST GERMANY
Astronic GmbH
Winzererstrasse 47d
8000 Munich 40,
West Germany
Tel. (089) 309031
Telex (841) 5216187

Hearst
HEARST BUSINESS COMMUNICATIONS, INC./UTP DIVISION
645 Stewart Avenue, Garden City, NY 11530 (516) 222-2500 TWX: 510-222-1673

Don't Miss the
IC Updates

These quarterly updates keep your IC Master current the year 'round.

Look for them in Integrated Circuits Magazine

LINEAR

Amplifiers, Operational (cont)

1 **"The HA-2530/2535 Wideband High Slew Inverting Amplifier"**
(HA-2530, HA-2535)
Briefly discusses internal circuit. Shows how closed-loop frequency response can be predicted. Describes application as a fast settling coaxial driver, a 10 MHz coaxial line driver, a wide range signal separator, a high frequency triangular wave generator, and a current-to-voltage converter.
Harris Semiconductor AN-516 (11pp)

2 **"The HA-2900 Monolithic Chopper Stabilized Amplifier"**
(HA-2900)
Discusses offset voltage and current drift and chopper stabilization, then describes the circuit. Applications include a high impedance differential instrumentation amplifier, use as an integrator, and several wide bandwidth configurations.
Harris Semiconductor AN-518 (8pp)

3 **"The ICL7650: A New Era in Glitch-Free Chopper Stabilized Amplifiers"**
Discusses the development of a monolithic CMOS chopper-stabilized amplifier that uses a single full-time main amplifier to eliminate output glitches and area- and charge-balancing on the input-switching network to minimize input switching glitches. Includes schematics, operating characteristics and application techniques.
Intersil A053 (16 pp)

"The Instrumentation Amp vs the Op Amp; Which, Where, and How to Use Them"
See listing under (Linear) Amplifiers, Instrumentation (Teledyne Philbrick)

4 **"The Monolithic Op Amp: A Tutorial Study"**
Detailed paper on the design of IC operational amplifiers.
National Linear Applications Handbook (18pp)

5 **"The OP-07 Ultra-Low Offset Voltage Op Amp—A Bipolar Op Amp that Challenges Choppers, Eliminates Nulling"**
(OP-07)
Describes circuit design, compares performance to other devices. Covers application in a voltage reference, a high accuracy buffer, a D/A test system, a composite summing amplifier, an absolute value circuit, an analog computer building block, and as a thermocouple amplifier.
Precision Monolithics AN-13 (12pp)

6 **"Understanding and Using the CA3130, 3130A, and 3130B BiMOS Operational Amplifiers"**
(CA3130, CA3130A, CA3130B)
Summarizes the characteristics and unique features of the CA3130 Series of BiMOS op amps. Sample applications include a voltmeter with high input resistance, thermocouple temperature control with zero-voltage load switching, a photodiode current-to-voltage converter, and a precision voltage-controlled oscillator.
RCA ICAN-6386 (5pp)

7 **"Using Op Amps in Low Noise Applications"**
Discusses shot noise and noise from source resistances.
Burr-Brown AN-68 (2pp)

8 **"Using the IT500 Family to Improve the Input Bias Current of BIFET Op Amps"**
Shows how the variation of input bias current with input voltage in BIFET op amps can be reduced by using the IT500 as a preamplifier.
Intersil A050 (1 p)

Amplifiers, Operational (cont)

9 **"Working with High Impedance Op Amps"**
Describes a low offset voltage op amp that also has low input current error, especially at high temperatures. Discusses techniques for eliminating problems with high impedance circuits.
National Semiconductor AN241 (6pp)

Amplifiers, Power

10 **"D.C. Servo Motor Systems Using the ICH8510"**
(ICH8510)
Explains servo systems in general and use of the device for velocity control, position control, and torque control in particular.
Intersil Application Bulletin A026 (4pp)

"Power D/A Converters Using the IH8510"
See listing under (Interface) Converters (Intersil)

11 **"TBA810S/AS Thermally Protected Power Amplifier"**
(TBA810)
Description of the device followed by discussion of its performance. Also shows examples of use in tone control, TV, radio and tape playback channel applications.
SGS-ATES Technical Note 120 (16pp)

12 **"TBA820 Two-Watt Monolithic Audio Amplifier"**
(TBA820)
Lists main electrical characteristics of device and presents typical applications.
SGS-ATES Technical Note 114 (11pp)

13 **"TCA830S-Thermally Protected Audio Power Amplifier"**
(TCA830S)
Briefly describes how the device functions followed by an examination of performance under different supply and load conditions. Portable AM/FM receiver, intercom, and magnetic tape player circuits are shown.
SGS-ATES Technical Note 126 (15pp)

14 **"TCA940 Fully Protected Audio Amplifier"**
(TCA940)
Presents temperature and output short circuit protection features of the device along with a description of its performance. Illustrates use of the device in a stereo amplifier and an equalized amplifier for magnetic pickups.
SGS-ATES Technical Note 119 (15pp)

15 **"TDA2020/TDA2010 HI-FI Monolithic Amplifiers"**
(TDA2020, TDA2010)
Describes these power amplifiers and how to apply them.
SGS-ATES Technical Note 130 (12pp)

16 **"The MC1554 One-Watt Monolithic Integrated Circuit Power Amplifier"**
(MC1554)
Describes the circuit, including dc characteristics, frequency response, and distortion. Shows how to calculate package power dissipation using the curves on the data sheet. Describes application, as one watt non-inverting, inverting, pulse power, and three-watt differential output amplifiers.
Motorola AN-401 (7pp)

LINEAR

Amplifiers, RF

1 **"A High Gain Integrated Circuit RF-IF Amplifier with Wide Range AGC"**
(MC1590G)
Describes operation and Y parameters of the MC1590G. Applications include mixer plus IF, video, single and two-stage RF amplifiers.
Motorola AN-513 (10pp)

2 **"A Two-Stage 1kW Solid-State Linear Amplifier"**
Discusses the design of 50W and 300W linear amplifiers for the 1.6 to 30 MHz frequency band.
Motorola AN-758 (16pp)

3 **"Application of the RCA CA3002 Integrated-Circuit IF Amplifier"**
(CA3002)
Describes circuit, operating modes, characteristics, and application as an envelope detector, product detector, and a Schmitt trigger.
RCA ICAN-5036 (9pp)

4 **"Application of the RCA CA3004, CA3005, and CA3006 Integrated-Circuit RF Amplifiers"**
(CA3004, CA3005, CA3006)
Discusses operating modes, Y parameters, noise performance, video amp capabilities, gain control, cross modulation and modulation distortion. Covers application as single-ended RF amplifier, tuned IF amplifier, mixer, suppressed-carrier modulator and product detector.
RCA ICAN-5022 (26pp)

5 **"Application of the RCA CA3021, CA3022, and CA3023 Integrated-Circuit Wideband Amplifiers"**
(CA3021, CA3022, CA3023)
Describes circuit and operating characteristics. Covers video, 10 MHz IF, 455 kHz IF, 28 MHz two-stage limiter, and 500 kHz limiting amplifier applications.
RCA ICAN-5338 (12pp)

6 **"Application of the RCA CA3028A and CA3028B Integrated-Circuit RF Amplifiers in the HF and VHF Ranges"**
(CA3028A, CA3028B)
Describes circuits and operating modes. Covers use as an RF amp, autodyne converter, IF amp, and limiter.
RCA ICAN-5337 (10pp)

7 **"Linear Amplifiers for Mobile Operation"**
Discusses the design of a portable amplifier suitable for amateur radio applications.
Motorola AN-762 (8pp)

8 **"Logarithmic IF Strips Using Monolithic Integrated Circuits"**
(SL521)
Describes operation of this log amplifier in successive detection type IF strips with center frequencies from 10 to 100 MHz. Covers broadband and narrow band circuits and describes in detail a 60 MHz wide-range logarithmic amplifier.
Plessey Semiconductor Technical Communication (3pp)

Amplifiers, RF (cont)

9 **"Logging IF Strip"**
(SL1521)
Describes a logging IF strip using Plessey IC's.
Plessey Semiconductor (2pp)

Amplifiers, Special Purpose

10 **"Using the 8048/8049 Monolithic Log-Antilog Amplifier"**
(ICL8048, ICL8049)
Describes in detail the operation of the 8048 log amp, and its counterpart, the 8049 antilog amp.
Intersil A007

Amplifiers, Video

11 **"Application of the RCA CA3001 Integrated-Circuit Video Amplifier"**
(CA3001)
Describes circuit and operating characteristis. Covers cascaded stages and use as a Schmitt trigger.
RCA ICAN-5038 (9pp)

12 **"Gated Video Amplifier Applications Using the MC1545"**
(MC1545)
Reviews the operation of the MC1545 and discusses some applications for the device. Included are several modulator types, temperature compensation of the active gate, AGC, gated oscillators, FSK systems, and single-supply operation.
Motorola Semiconductor AN-491 (16pp)

"Television Video IF Amplifier Using Integrated Circuits"
See listing under (Linear) Consumer, TV (Motorola)

13 **"Video Applications"**
(HA-5190, HA-5195)
Discusses power supply requirements and temperature considerations, and provides design and prototyping tips for using an op amp as a video amplifier.
Harris AN526 (5pp)

Arrays

14 **"Application of the RCA CA3018 Integrated Circuit Transistor Array"**
(CA3018)
Array of two isolated silicon epitaxial transistors plus two transistors with emitter-base common connections, suited for closely matched device requirements or interconnections with non-integrable components. Applications covered include IF-RF, video, AGC, audio and dc amplifiers.
RCA ICAN-5296 (5pp)

LINEAR

Arrays (cont)

1 **"Application of the RCA CA3019 Integrated-Circuit Diode Array"**
(CA3019)
Describes circuit configuration, operating characteristics and applications, including balanced modulator, high-speed gates, balanced mixer, and a ring modulator.
RCA ICAN-5299 (6pp)

2 **"Designing with an IC Transistor Array Containing Matched Super-Beta Transistors"**
(CA3095)
Describes CA3095 IC array. Applications: low frequency amplifier, low noise video amplifier, long-delay monostable multivibrator, low-input-bias current comparator, analog timer for long delays, high input impedance dc-voltmeter circuit, and tape-head preamplifier.
RCA ICAN-6222 (9pp)

3 **"Super-Matched Differential Pair"**
(MONOCHIP)
Illustrates matching capabilities of interconnected NPN devices on the Monochip family. The circuit described consists of 2 transistors implemented by interconnecting 18 small geometry devices in parallel.
Interdesign APN-20 (5pp)

4 **"Using the SL362C Low Noise Transistor Pair"**
(SL362)
Provides general data on noise performance plus application in DC to 200 MHz amplifier.
Plessey Semiconductor Technical Communication (4pp)

Communications

5 **"2400 BPS DPSK Modem System Using the MC6172/6173"**
(MC6172, MC6173)
Describes the design procedure for implementing a low-cost modem system using the MC6172/6173 chip set as a core.
Motorola Semiconductor AN-870 (14pp)

6 **"A 10-Number Repertory Pulse Dialer"**
(AY5-9100, AY5-9200, AY5-9500)
Diagram and short description of a telephone pulse dialer with capability for storage and reference of 10 numbers of up to 22 digits each.
General Instrument Bulletin 0702 (2pp)

7 **"A CB Audio Compression System"**
(MONOCHIP)
Describes using the device to provide an on-chip regulator, audio pre-amp, AGC amplifier, DC volume control, and a headphone driver amplifier for use in a CB transceiver.
Interdesign APN-10 (7pp)

8 **"A PC Board Direct Access Arrangement Family"**
(CH1810, CH1812)
Discusses modem-type communication links and the telephone line interface.
Cermetek DOC 34 (32pp)

9 **"An Introduction to Mitel DTMF Receivers"**
(MT8865, MT8870, MH88210, MH88305)
Illustrates the cost, performance and real-estate benefits of the DTMF signaling medium for conventional dialing applications, as well as for certain data transmission and remote control applications.
Mitel Semiconductor MSAN-106 (7pp)

Communications (cont)

10 **"Applications of Hybrid Active Filters to Telecommunication Systems"**
(AF133, AF134)
Transmit and receive filters in 8 kHz sample rate PCM systems such as D3 channel bank and band splitting filters for DTMF receivers are described, and their application to these systems is discussed.
National AN-221 (4pp)

11 **"Applications of the MT8860 Family of DTMF Receivers"**
(MT8860, MT8862, MT8863, MT8865, MH88210, MH88305)
The MT8865 filter and MT8860 decoder can be used to update rotary-dial telephones by tone-to-pulse conversion and to create a call restrictor for a private telephone or private branch exchange. Applications include the remote control of test, measurement, and industrial equipment, and of home appliances, alarm systems, and unattended message recorders.
Mitel Semiconductor MSAN-105 (7pp)

12 **"Current Sources"**
(MK50992)
Discusses the use of constant-current sources in pulse dialer application circuits.
Mostek Applications Brief (2pp)

13 **"DTMF Receiver System"**
(MK5102, MK5103)
Describes the construction of a DTMF receiver system.
Mostek Applications Brief (2pp)

14 **"Data Conversion, Switching, and Transmission using the Intel 2910A/11A Codec and 2912 PCM Filter"**
(2910A/2911A, 2912)
Provides general telecommunications concepts and terminology. Includes technical reviews of codecs and PCM filters and gives application guidelines.
Intel AP-64 (40pp)

15 **"Delta Modulation for Voice Transmission"**
Provides introduction to delta modulation basics and describes various applications, including telecommunications and audio delay lines, in which it can be used.
Harris Semiconductor AN-607 (6pp)

16 **"Design Considerations for a DTMF Receiver System Using the MK5102-5"**
(MK5102-5)
Describes all of the requirements for building a high-quality DTMF receiver using the MK5102-5 DTMF decoder and hybrid filters, including output formatting, receiver testing, input squaring, squaring circuit-to-decoder coupling, and power supply and band separation filter considerations.
Aptek Microsystems (9pp)

17 **"Designing Second-Generation Digital Telephony Systems Using the Intel 2913/14 Codec/Filter Combochip"**
(2913, 2914)
Describes the features and capabilities of the 2913 and 2914 codec/filter combochips, and relates these capabilities to the design and manufacture of transmission and switching linecards.
Intel AP-142 (18pp)

LINEAR

Communications (cont)

1 **"Designing with TCM1500A Bell Tone Ringer/Detector Family"**
(TCM1501A, TCM1505A, TCM1506A, TCM1512A, TCM1520A)
Discusses the use of BIDFET ICs to cost effectively replace up to ten discrete components. Applications include telephones, auto-answer modems, and small-current power supplies.
Texas Instruments AR-SCTA001 (28pp)

2 **"Digital Telephony and the Integrated Circuit CODEC"**
(TP3000, TP3001)
Discusses in detail PCM CODECs. Covers theory, μ-law and A-law characteristics, and device specifications. Also provides test controller examples, transmission applications, and switching applications.
National AN-215 (16pp)

3 **"Dual Tone Decoding"**
(XR567, XR2567)
Discusses and presents diagrams for a fast, narrow band tone decoder, a touch-tone decoder, and a low cost frequency indicator.
Exar AN-08 (2pp)

4 **"EX-C277 Low-Voltage PCM Repeater IC"**
(XR-C277)
Explains PCM repeater fundamentals, device operation, and presents schematic for a repeater application.
Exar An-04 (6pp)

5 **"Electronic Tone Ringer to Replace the Telephone Bell"**
(ML8204, ML8205)
Investigates the considerations involved in defining an electronic tone ringer to replace the mechanical telephone bell. Illustrates a tone ringer using the ML8204, including construction and electrical and acoustical characteristics.
Mitel Semiconductor MSAN-103 (7pp)

6 **"Gain Measurements in a CODEC System"**
(TP3000)
Explains aspects of telecommunication measurement techniques and units as they apply to the single channel CODEC.
National AN-219 (4pp)

7 **"Glossary of Digital Telecommunications Terms"**
Presents definitions of terms commonly encountered in telecommunications in relation to digital switching and transmission of speech signals.
Mitel Semiconductor MSAN-102 (7pp)

8 **"HC-55516/32 CVSD Concept and Operations"**
(HC55516, HC55532)
Outlines Continuously Variable Slope Delta Modulation and compares it to pulse code modulation.
Harris Semiconductor (5pp)

9 **"High Performance PCM Repeater Using XR-C262"**
(XR-C262)
The design principle and the electrical characteristics of the XR-C262 high performance PCM repeater IC are described. Circuit connection and application examples are given in its use in 1.5 Megabit or 2 Megabit PCM systems.
Exar AN-10 (8pp)

Communications (cont)

10 **"Logarithmic Units of Measure in Telecommunications"**
An introduction to the logarithmic units used in the telecommunications industry.
RCA ICAN-7037 (4pp)

11 **"MK5380 Typical Telephone Application"**
(MK5380)
Presents a scheme for using the MK5380 tone dialer in a telephone dialing system.
Mostek Applications Brief (4pp)

12 **"Manchester Encoding and Decoding for Local Area Networks"**
(8002)
Describes discrete implementation of encoder/decoder circuitry.
SEEQ (16pp)

"Modems"
See listings under (Interface) Data Transmission

13 **"Monolithic Dual-Tone Multi-Frequency Receiver"**
(SSI201)
Describes device and its operation, gives performance data and three application circuits: a 16-channel remote control, a 2-of-8 decoder, and a DTMF to rotary dial pulse converter.
Silicon Systems (8pp)

14 **"One-Button 32 Number Repertory Dialer/Calculator"**
(AY5-9200)
The circuit described features one-button redial of one of the 32 storable telephone numbers of up to 22 digits each. The 8-digit calculator features five functions, including percent.
General Instrument Bulletin 0706 (6pp)

15 **"Pulse Dialer Comparison"**
(MK5098, MK5099, MK50981, MK50982, MK50992)
Compares the major differences between Mostek pulse dialers.
Mostek Applications Brief (6pp)

16 **"Pushbutton Dialer with Memory"**
(AY5-9100, A5-9200, AY5-9500)
Provides instructions, diagram, and PC board layout for an add-on device that connects to any telephone and permits dialing via a separate keyboard. The module has a redial mode and a 20-digit 10 number expandable memory.
General Instrument Bulletin 0701 (7pp)

17 **"S2559 Digital Tone Generator"**
(S2559)
Describes a tone generator designed specifically to implement a dual tone telephone dialing system.
American Microsystems ANT01 (12pp)

18 **"SL560 Low Noise Amplifier Owner's Manual"**
(SL560)
Describes operation of a high-power 50-ohm amplifier, includes design examples of a 2-channel, variable-gain preamplifier.
Plessey Semiconductor (9pp)

LINEAR

Communications (cont)

1 **"SL600 Series—Integrated Circuits for Radio Communications"**
(SL600 Series)
Describes circuits and applications for the following: RF/IF amplifiers; limiting RF amplifier/detector; AGC generators; AF amplifier, VOGAD side tone amplifier, AM detector, AGC amplifier and SSB demodulator; multimode detector; microphone/headphone amplifier; double balanced modulators; and a square log device. Describes synchrodyne, superhet, SSB and multimode receivers; SSB and AM transmitters; SSB transceiver, a multi/mode transceiver and a Morse keyer.
Plessey Semiconductor Applications Manual (92pp)

2 **"The Impact of LSI on the Design of PCM Codecs"**
Discusses the changes existing telephone systems will go through as LSI circuits are increasingly used for PCM and computer controlled switching.
General Instrument Bulletin 0707 (4pp)

3 **"Using Integrated Detector/Preamplifiers in Fiber Optic Systems"**
(MC75452, MFOE102F)
Discusses the advantages of using an integrated detector/preamplifier for fiber optics communication links by (1) simplifying circuit design and layout and (2) allowing the entire "front-end" of the receiver to be enclosed in a shielded connector.
Motorola AN-814 (4pp)

4 **"XR-C240 Monolithic PCM Repeater"**
(XR-C240)
Provides device description, description of circuit operation, and schematics for a typical repeater system.
Exar AN-02 (6pp)

Comparators

5 **"A High Speed Dual Differential Comparator—the MC1514"**
(MC1414, MC1514)
Describes circuit operation and applications, including level and limit detectors, multivibrators, line receivers, sense amplifiers, zero crossing pulse generator and a peak voltage detector.
Motorola AN-547 (13pp)

"A Simple Comparator Using the HA2620"
See listing under (Linear) Amplifiers, Operational (Harris)

6 **"AM685/AM686/AM687 Designing with High Speed Comparators"**
(685, 686, 687)
Gives a mathematical analysis of circuit operation. Discusses use as a pulse detector, precision monostable and applications requiring hysteresis.
Advanced Micro Devices (10pp)

7 **"Application of Programmable Micropower Comparators"**
(L161)
Describes the device and how to program it. Also describes the effects of programming on AC characteristics, limit, zero crossing, and level detectors; DC to DC converter applications.
Siliconix AN76-7

Comparators (cont)

8 **"High-Speed Comparator Applications"**
(SP9750, SP9685, SP9687)
Describes a family of high-speed comparators and circuits for A/D converters. Reviews all parallel, parallel/series and successive approximation conversion techniques.
Plessey (50pp)

9 **"RC4805 High Speed Precision Latching Comparator"**
(RC4805)
Describes the principles of operation and details several applications of a high-speed latching comparator.
Raytheon Semiconductor AN27 (16pp)

"Radiation Testing of Linear Microcircuits"
Includes the 702. See listing under (Linear) General. (Fairchild).

10 **"The 725 Op Amp as a Low Level Comparator"**
(PM725)
Provides the circuit and design curves for a submillivolt level comparator based on the 725 op amp.
Precision Monolithics AN-25 (4pp)

11 **"Varying Comparator Hysteresis without Shifting Initial Trip Point"**
Describes adding a positive feedback circuit to introduce precise variable hysteresis into the usual comparator switching action.
Burr-Brown AN-62 (1pp)

Consumer, AM/FM

12 **"AM-FM Radio Designs Using the ULN-2242A, ULN-2241A and ULN-2240A Integrated Circuits"**
(ULN-2242A, ULN-2241A, ULN-2240A)
Describes ICs containing all the active circuits needed for the AM tuner, FM IF amplifier and detector of a radio receiver. Details options for implementing these functions.
Sprague AN27121.63 (14pp)

13 **"AM/SSB Transceivers and Noise Blanking Using SL1600 Series Circuits"**
(SL1623, SL1626, SL1640, SL1641)
Describes the sub-systems used in AM-SSB transceivers.
Plessey Semiconductor (10pp)

14 **"An AM Receiver Using the Plessey SL1600 Series"**
(SL1600 Series)
Describes the design of a simple AM receiver.
Plessey Semiconductor (7pp)

15 **"An SSB Transceiver for Citizens' Band Using Plessey SL1600 Integrated Circuits"**
(SL1600 Series)
Describes the design of an SSB transceiver.
Plessey Semiconductor (4pp)

16 **"Application of the CA3089E FM-IF Subsystem"**
(CA3089)
Discusses stability considerations and following circuits: quadrature-detector, audio and AFC, mute, tuning meter and rf-AGC, if amplifier/detector system and stereo decoder. Also covers operation at frequencies other than 10.7 MHz.
RCA ICAN-6257 (8pp)

LINEAR

Consumer, AM/FM (cont)

1 **"Applications of the One-Chip-Radio Integrated Circuit Family"**
(TDA1083, U410B, U411B, U416B, U417B, U418B)
Gives sample applications of the U410B 1W audio amplifier, U411B 1W audio amplifier with variable gain, U417B and U418B single-chip radio ICs, U416B RF section of the U418B with an additional audio preamplifier, and TDA 1083 standard single-chip radio IC.
AEG-Telefunken SI 2.81 (8pp)

2 **"Binary Synthesizers Users Guide"**
Full details on components of a two-device binary synthesizer. Includes programming information.
Plessey Semiconductor (13pp)

3 **"Designing FM Tuners with TDA1062 and TDA1093 Integrated Circuits"**
(TDA1062, TDA1093)
Includes functional diagrams, schematics, and typical performance charts along with discussion of FM tuner design.
AEG-Telefunken (46pp)

4 **"Designing VHF Receivers with TDA1062 and U414B Integrated Circuits"**
(TDA1062, U414B)
Analyzes selected techniques and design concepts involved in the use of the TDA1062 IC in crystal-controlled and varactor-tuned VHF communications receivers.
AEG-Telefunken AB 9/81 (10pp)

5 **"Development of High-Quality Receivers for A-M Stereo"**
(ULN-2241A, ULN-2249A)
Gives design parameters for rf and if sections of am stereo receivers with examples utilizing standard integrated circuits.
Sprague TP80-5 (5pp)

6 **"Frequency Selective AM Detection Using Monolithic Phase-Locked Loops"**
(XR2228, XR215, XR2212)
Design of frequency selective coherent AM and AM/FM demodulator systems using these devices is described.
Exar AN-13 (4pp)

7 **"IF Amplifier/Detectors for FM Receivers"**
(SL6600, SL6640, SL6650, SL6690)
Describes monolithic ICs containing an IF strip, an FM demodulator and a squelch system for use in FM receivers for mobile, portable,base-station and paging systems. Provides circuit diagrams of typical applications and includes printed circuit layouts and component location.
Plessey (32pp)

8 **"Integrated Circuit IF Amplifiers for AM/FM and FM Radios"**
(MC1350, MC1351, MC1355, MC1357, MC3310)
Discusses the design and performance of four IF amplifiers including a high-performance circuit, a circuit utilizing a quadrature detector, a composite AM/FM circuit, and an economy model for use with an external discriminator.
Motorola Semiconductor AN-543A (16pp)

Consumer, AM/FM (cont)

9 **"Integrated Circuits for FM Broadcast Receivers"**
(CA3005, CA3011, CA3012, CA3013, CA3014)
Discusses circuits for FM tuner, IF amplifier, limiter, and detector applications.
RCA ICAN-5269 (7pp)

10 **"Integrated-Circuit Stereo Decoder Using the CA3090AQ Stereo Multiplex Demodulator"**
(CA3090AQ)
Gives circuit description. Describes the LC oscillator, reactance, stereo defeat, dc coupled flip-flop preamplifier and phase splitter circuits.
RCA ICAN-6259 (10pp)

11 **"Manual and Automatic FM Tuning System Using Economega I"**
(Economega, AY3-8203, ER1400, MEM4956)
Describes a system that allows manual tuning of a Goodman 1-20 tuner with non-volatile electronic storage of tuning data for 16 stations. Diagrams, schematic.
General Instrument Bulletin 0414 (4pp)

12 **"Radio Receiver Frequency Counter/Clock"**
Supplies diagram and operating instructions for using each device to display time or frequency on a 3½ digit display.
General Instrument Bulletin 0411 (3pp)

13 **"SL1600 Series Transceiver Applications"**
(SL1600 Series)
Discusses simple SSB and multimode transceiver design.
Plessey Semiconductor (32pp)

"Scanning Logic for RF Scanner-Receivers Using CMOS Integrated Circuits"
See listing under (Digital) CMOS (Motorola)

14 **"TDA1083—Integrated Circuit for AM/FM Receivers"**
(TDA1083)
Shows external connections for using integrated receiver circuit in low and medium power AM/FM radios, VHF and microwave receivers, and in TV sound channels.
AEG-Telefunken Halbleiter Informationsdienst 2.78 (11pp)

15 **"TDA1200 FM-IF System for High Performance Radio Receivers"**
(TDA1200)
Gives a detailed description of the device. Describes relative performance of device when used in an FM tuner, an AM/FM car radio, and a portable AM/FM radio.
SGS-ATES Technical Note 117 (12pp)

16 **"The Design of Programmable Dividers for UHF and VHF Synthesizers"**
(SP8000 Series)
Details considerations for designing a programmable frequency synthesizer using high-speed frequency dividers and standard TTL devices. Example problems demonstrate device selection procedures.
Plessey AN2 (24pp)

17 **"ULN-2204A AM/FM Receiver System"**
(ULN-2204)
Presents operation of device and discusses typical applications.
Sprague AN-27121.51 (12pp)

LINEAR

Consumer, AM/FM (cont)

1 **"VHF Synthesizer"**
(SP1648, SL1521, SP8690, SP8790, SP8760)
Describes a phase-lock loop synthesizer used in marine UHF radio telephone, weather broadcasts, air-traffic control and the amateur 2-meter band. Provides electrical diagrams and circuit board layout.
Plessey (3pp)

Consumer, Audio

"An AGC Building Block"
See (Linear) Consumer, TV (Interdesign)

2 **"An Electronic Music Synthesizer Using the XR2207 and the XR2240"**
(XR2207, XR2240)
The design of a simple, low-cost music synthesizer system is described.
Exar AN-15 (2pp)

3 **"An Electronic Piano Using the AY-1-1320"**
(AY1-0212, AY1-1320, AY1-5050)
Presents circuit diagrams and description of an electronic piano using a divider, a top octave generator and the device.
General Instrument Bulletin 0501 (5pp)

4 **"Application of Audio Amplifier - Transistor Array ICs"**
(LM389)
Discusses the use of audio amplifier ICs with on-chip transistor arrays in a variety of audio circuits including a dc-dc converter, bistable touch switch, frequency standard, oscillator and logarithmic amplifier.
National Semiconductor AN-264 (5pp)

5 **"Application of the RCA CA3007 Integrated-Circuit Audio Amplifier"**
(CA3007)
Describes circuit. Covers application as dual-supply audio driver in a direct-coupled audio amp, and as single-supply audio driver in a capacitor-coupled audio amp.
RCA ICAN-5037 (4pp)

6 **"Applications for Audio and Electronic Music"**
(SSM2030, SSM2040, SSM2050)
Analysis of the 2030 voltage controlled oscillator, the 2040 voltage controlled filter and the 2050 transient generator in electronic music systems. Discusses error sources and techniques for improving accuracy and temperature stability. Circuit diagrams are included.
Solid State Micro Technology for Music (8pp)

7 **"Audio Amplifiers"**
Discusses basic design considerations, performance capabilities, and circuit configurations for audio amplifiers intended for a wide range of power-output levels. Covers preamplifiers, intermediate stages, overload protection circuits, as well as audio output circuits. Features circuit diagrams and per-data for a wide variety of practical circuits, including discrete-component types, integrated-circuit types, or a combination of discrete components and integrated circuits.
RCA APA-551 (104pp) $5.00

Consumer, Audio (cont)

8 **"Build a Simple Comb-Filter or Flanger with a Bucket Brigade Delay Line"**
(SAD1024A)
Describes a flanger (electronic sound modifier) and what is needed to build one.
Reticon AN-113 (4pp)

9 **"Cassette Tape Players using TDA7270"**
(TDA7270)
Describes circuit operation and gives application guidelines for an IC that provides control functions for a cassette/radio unit.
SGS-ATES DN347 (8pp)

10 **"M252 and M253 Rhythm Generators for Electronic Organs"**
(M252, M253)
Defines and describes rhythm generators. Presents these two devices, and describes their use in electronic organs.
SGS-ATES Technical Note 131 (21pp)

11 **"MOS Music"**
(S10377, S10430, S50240)
Illustrates a basic electronic organ system and describes its implementation using the devices.
American Microsystems AN79C05 (6pp)

12 **"S8890 Rhythm Generator"**
(S8890)
Demonstrates capabilities of the S8890, and explains programming of custom ROM patterns.
American Microsystems AN79RR01 (11pp)

"TCA600/900 and TCA610/910 Integrated Motor Speed Regulators"
See listing under (Linear) Industrial Control (SGS-ATES)

13 **"TDA105M—Cassette Recorder Preamplifier with ALC"**
(TDA1054M)
Discusses features of the device and preamplifier noise. Applications in Hi-Fi, stereo, and dynamic range compressors are described.
SGS-ATES Technical Note 124 (24pp)

14 **"Use of Analog Delay Lines for Audio Speed Change without Pitch Changes"**
(SAD1024A)
Describes technique for increasing or slowing the speed of a recording.
Reticon AN-112 (4pp)

15 **"Useful Noise—S2688"**
(S2688)
Explains noise types and workings of a noise generator. Examines use of device in Pink and White noise generators and as a noise source in synthesizer circuits.
American Microsystems AN79C01 (3pp)

16 **"Writing Music for the AY3-1350 Tunes Synthesizer"**
(AY3-1350)
Provides coding scheme for writing music to be incorporated in a PROM and played back by a music synthesizer chip.
General Instrument Bulletin 0502 (4pp)

© IC MASTER 1984

LINEAR

Consumer, Medical

1 **"A Personalized Heart-Rate Monitor with Digital Readout"**
(MC1776, MC14013, MC14040, MC14572)
Describes digital heart-rate monitor using the MC1776 op amp and CMOS digital ICs.
Motorola AN-714 (4pp)

Consumer, TV

2 **"A High Stability Syn-AGC and Horizontal-Vertical Countdown System for 525-Line Color Television Receiver Applications Using the RCA CA3154G and CA3157G Integrated Circuits"**
(CA3154, CA3157)
Provides detailed description of each circuit and how they are used in 525-line color TV applications. Contains schematics and waveforms for selected terminals.
RCA ICAN-6802 (20pp)

3 **"A New Low-Level Luminance Processing System"**
(CA3143, CA3144)
In addition to performing the traditional functions of peaking, gain control, subcarrier removal, and black-level clamping for color television receivers, the Colortrak luminance processing system handles nonlinear transient compression and ambient light tracking.
RCA ICAN-7173 (6pp)

4 **"A Single IC for the Complete PIX-IF-System in TV Receivers"**
(CA3068)
Gives a detailed description of the circuit functions of the CA3068 and its use in color and b/w TV receivers.
RCA ICAN-6303 (17pp)

5 **"An AGC Building Block"**
(MONOCHIP)
Describes four AGC circuits using a semi-custom chip. Includes graphs of characteristics and schematics.
Interdesign APN-17 (6pp)

6 **"Application of the CA3126Q Chroma-Processing IC Using Sample-and-Hold Circuit Techniques"**
(CA3126Q)
Detailed circuit description of the device, which requires only one adjustment; a trimmer capacitor to tune the crystal filter. Discusses performance data, the phase detector, sample and hold circuits, the VCO loop, first chroma amplifier and ACC servo loop, and the second chroma amplifier.
RCA ICAN-6247 (8pp)

7 **"Application of the CA3143 and CA3144 TV Luminance Processors"**
(CA3143, CA3144)
Describes application information for both the CA3143 and CA3144 luminance processors.
RCA ICAN-6718 (4pp)

8 **"Application of the MC1374 TV Modulator"**
(MC1374)
The MC1374 was designed for use in applications where separate audio and composite video signals are available, and which need converting to a high-quality VHF television signal. Examples include an output device for subscription TV decoders, video disk and video tape players.
Motorola Semiconductor AN-829 (12pp)

Consumer, TV (cont)

9 **"Application of the RCA CA3044 and CA3044V1 Integrated Circuits in Automatic-Fine-Tuning Systems"**
(CA3044)
Describes circuits, operating characteristics and dynamic performance of this wideband amplifier for AFC applications.
RCA ICAN-5831 (5pp)

10 **"Applications of the CA3134G Sound IF and Output Subsystem in Television Receivers"**
(CA3134)
Describes device and its application in TV sound systems.
RCA ICAN-6728

11 **"CA3210 Horizontal, Vertical and Regulator Control IC"**
(CA3210)
This note describes the use of the CA3210 deflection IC in generating horizontal and vertical drive signals, generating a control signal for a receiver's voltage regulator, regulating an IC supply, controlling IC and receiver start-up, correcting for VCR skew error, and preamplifying a vertical scan signal.
RCA ICAN-7164 (5pp)

12 **"DIDON Demodulator General Operating Principles"**
(TEA2585, TEA2586)
Explains the use of a two-chip DIDON demodulator for the transmission of filtered digital data over television broadcast channels. Topics include the extraction of digital data, data clock regeneration, and validation signal generation.
Thomson CSF Components NA-021A (22pp)

13 **"Description and Application of the RCA CA3120E and CA3142E Integrated-Circuit TV-Signal Processors"**
(CA3120E, CA3142E)
Gives circuit description and application instructions for two ICs that process video signals in monochrome or color TV receivers and supply noninverted and video outputs, dual-polarity composite synchronization signals and AGC signals.
RCA ICAN-6302 (9pp)

14 **"Description and Use of the Vertical Deflection IC TEA 2015A"**
(TEA 2015A)
Explains the operation of the TEA 2015A vertical deflection IC and describes its application in small-screen black and white sets.
Thomson CSF Components NA-013A (15pp)

15 **"EF9365, EF9367 External Synchronization"**
(EF9365, EF9367)
Describes a complete 625-line synchronization system for the EF9365/7 processors. Covers incrustation on a standard TV equipped with a SCART connector.
Thomson CSF Components NA-016R1A (9pp)

16 **"Economega I Digital Tuning for UK Televisions"**
(Economega)
Describes two eight program UHG band versions of the Economega System specificaly for U.K. market. Conventional AFC is retained for simplicity. Includes a manually controlled search feature.
General Instrument Bulletin 0420 (4pp)

LINEAR

Consumer, TV (cont)

1 **"Feedback-Type Volume-Control Circuit for RCA CA3041 and CA3042 Integrated Circuits"**
(CA3041, CA3042)
Describes several types of volume controls for television receivers using these ICs, with detailed discussion of feedback control.
RCA ICAN-5841 (4pp)

2 **"Integrated NTSC Chrominance/Luminance Processor"**
(CA3217)
Beginning with a brief historical review of the improvements in color television receivers, this note then gives a detailed description of the operation of the CA3217 chrominance/luminance processor IC.
RCA ICAN-7175 (11pp)

3 **"PAL Color Encoding Systems for the AY3-8500 TV Game Circuit"**
(AY3-8500)
Briefly describes the PAL system, then presents two alternate circuits for color encoding the AY3-8500 TV game according to PAL.
General Instrument Bulletin 0404 (8pp)

4 **"Programmable TV Timer/Time-Channel Display"**
(MM53107, MM53100, MM5840)
Describes an on-screen TV real time and channel display based on the devices. Includes schematics and PC board layout.
National Semiconductor AN-196 (10pp)

5 **"Remote Control of Color TV Sets via Infrared Transmission"**
(TDA4180, SAB2010, SAB2020, H843, SAS660, SAS770)
Describes design and operation of an infrared transmitter and receiver for remote control of a TV set. Controlled functions include power, brightness, color, sound volume and channel selection.
AEG-Telefunken Halbleiter Informationsdienst 2/66 (3pp)

6 **"TEA 2020, A Vertical Deflection IC for 110° Large-Screen Colour TV Sets"**
(TEA2020)
Gives specs, block and schematic diagrams, and typical applications of the TEA 2020 vertical deflection IC.
Thomson CSF Components NA-012A (36pp)

7 **"TEA2017 Horizontal and Vertical Scanning Integrated Circuit for Black-White TV and Display Applications"**
(TEA2017)
Describes the operations of the TEA2017 IC, which provides synchronization and horizontal and vertical scanning with minimum external component requirements.
Thomson CSF Components NA-037A (17pp)

8 **"Television Horizontal APC/AFC Loops: The Last 10 Percent"**
Discusses some of the common problems that may be encountered in the design of horizontal APC/AFC loops and methods to avoid or overcome them.
Motorola AN-727 (15pp)

9 **"Television Video IF Amplifier Using Integrated Circuits"**
(MC1350, MC1352, MC1353, MC1330)
Considers the requirements of the video IF amplifier section of a television receiver, and gives working circuit schematics using integrated circuits that have been specifically designed for consumer-oriented products.
Motorola Semiconductor AN-545A (12pp)

Consumer, TV (cont)

10 **"Television Video IF Amplifier Using Integrated Circuits"**
(MC1330, MC1350, MC1352, MC1353)
Discusses requirements of the video IF section of a TV receiver. Describes MC1350/2/3 amplifier and MC1330 detector circuits. Includes design for a practical TV IF amplifier and detector.
Motorola AN-545A (11pp)

11 **"The MC1323—A Fully Programmable Demodulator"**
(MC1323)
Describes operation of this NTSC demodulator and use with various picture tube phosphors, especially color temperature D6500.
Motorola AN-763 (16pp)

12 **"Video Amplifier Design: Know Your Picture Tube Requirements"**
(MC1323)
Describes video systems designed to alleviate design compromises associated with driving a unitized gun picture tube.
Motorola AN-761 (26pp)

13 **"Video Game FM Sound Generator"**
Describes a system that enables a TV sound system to be used for game sounds as well.
General Instrument Bulletin 0405 (2pp)

Current Sources

14 **"Monolithic Current Mirrors"**
(TL011, TL012, TL014, TL021)
Describes the advantages inherent in a monolithic approach to matching transistors in implementing the Wilson current mirror circuit. Applications include a voltage-to-current converter, current buffer, constant-current sink, and lower-power light detector.
Texas Instruments CL-576 (10pp)

Display

15 **"Semi-Graphic Display Unit Using EF9340 and EF9341"**
(EF9340, EF9341)
Explains how to use EF9340/1 ICs to build a complete display unit for a videotex terminal or general-purpose 25 line by 40 character display unit. Programming considerations are included.
Thomson CSF Components NA-006A (22pp)

16 **"25 by 80 Character Display Unit Using the EF9340 and EF9341"**
(EF9340, EF9341)
Gives a design example of a 25 line by 80 character display unit using the EF9340/1 ICs and two standard 1K by 8 static RAMs.
Thomson CSF Components NA-022A (21pp)

© IC MASTER 1984

LINEAR

Displays (cont)

1 **"Basic Routines for EF9365 and EF9366 Graphic Display Processors"**
(EF9365, EF9366)
Presents a selection of Assembly Language programs for the EF9365/6 processors, including programs for generating extended character sets, circles, rings, disks, and convex quadrilaterals.
Thomson CSF Components NA-028A (39pp)

2 **"EF9367 Graphic Display Processor Application Principles"**
(EF9367)
Discusses design considerations and principal applications of the EF9367 display processor in 512x640, 512x768, and 512x1024 resolution devices.
Thomson CSF Components NA-036A (28pp)

3 **"Use of the Extended Character Generator with the EF9340 and EF9341 Display Circuits"**
(EF9340, EF9341)
Explains how to extend the character set provided by the EF9340/1 ICs beyond 128 alphanumeric and 128 semi-graphic characters. A sample hardware implementation and programming are included.
Thomson CSF Components NA-029A (19pp)

4 **"Using the EF9364 Clock Inhibition Signal"**
(EF9364)
Describes the use of the clock inhibition signal on the EF9364 display circuit to inhibit dot clock for retrace blanking.
Thomson CSF Components NA-002A (7pp)

Followers

"Monolithic Operational Amplifiers—The Universal Linear Component"
See (Linear) Amplifiers, Operational (National)

General

5 **"A Cookbook Approach to High Speed Data Acquisition and Microprocessor Interfacing"**
Shows how to design a complex data-acquisition system as a series of building blocks using a mixture of LSI, MSI, SSI and discrete devices.
Intersil Application Bulletin A020 (20pp)

6 **"A Guide to Hybrid Circuit Design"**
Discusses techniques that aid the hybrid designer in the design and development of thin and thick film hybrid MICRO CIRCUITS. Emphasis is placed on assembly techniques and procedures with general design rules that help to avoid common design problems.
Precision Monolithics AN-33 (4pp)

General (cont)

7 **"A Technical Comparison of the Solid State Scientific Video Timer-Controller Family"**
(SND5027, SND5037, SND5057)
Describes the features and operating characteristics of a video timer-controller family.
Solid State Scientific AN-300 (4pp)

8 **"Alarm Circuit"**
(MONOCHIP)
Discusses an alarm sensing circuit capable of driving a loud speaker or LED or triggering a logic level. The design and performance is described in detail, including all component values, layout and characteristics over the military temperature range.
Interdesign APN-1 (7pp)

9 **"Analog Data Manual"**
Covers linear IC processing and design, data sheets and characteristics of operational amplifiers, video amplifiers, power controllers, timers, comparators, memory interfaces, transistor arrays, display drivers, D/A-A/D converters, PLL, microprocessor interface, and radio, audio and TV circuits. 1981.
Signetics $7.00 (448pp)

10 **"Applications Data Book"**
Contains Application Notes 1-17 individually described elsewhere.
Exar (80pp)

11 **"Bipolar Semi-Custom ICs in Non Entertainment Consumer Applications"**
(Monochips)
Discusses a semicustom approach to designing linear bipolar ICs in consumer, medical, telecommunications, military, industrial and automotive products.
Interdesign APN-24 (12pp)

12 **"Building Blocks for the Linear I.C. Designer"**
Presents approximate models for various basic circuit elements. Emphasizes key parameters of circuit and neglects complications.
Analog Devices (29pp)

"CMOS Linear Applications"
See listing under (Digital) CMOS (National)

13 **"Coil Driven Alarm Design Considerations"**
(ICM7220A)
Provides a simple circuit for boosting watch-circuit output to increase the volume of an audible alarm. Sample design problem is included.
Intersil Application Bulletin A031 (2pp)

14 **"Computer Analysis of Linear Semicustom IC's"**
(MONOCHIP)
Describes a computer aided design program jointly developed by Interdesign and UCC. Illustrates the use of this program by analyzing a high performance integrated phase-locked loop.
Interdesign APN-12 (6pp)

LINEAR

General (cont)

"Constant Current LED"
See listing under (Linear) Regulators (National)

1 **"Criteria for Choosing Resins and Evaluation Tests for Discrete and Integrated Power Devices in Plastic Packages"**
Describes the criteria and experimental procedures used in the choosing of moulding resin for plastic packaged devices.
SGS-ATES Technical Note 132 (15pp)

"Custom IC Design Using IL Technology"
See (Digital) IL (Exar)

2 **"Design Aid to Build a Smoke Detector with the SM110 IC"**
(SM110)
The SM110 functions applicable to building a smoke detector are discussed: a MOSFET input smoke sensing comparator, low-battery reference voltage, low-battery detector, internal timing, and output driver. A smoke detector schematic is given, along with application and construction aids.
Siliconix DA78-4 (6pp)

3 **"Function Circuits, Design and Applications"**
Covers design theory and applications for such analog functions as multipliers, dividers, logarithmic amplifiers, exponentiators, RMS converters, and active filters. Includes notes on specifying and testing these functions.
Burr-Brown $29.50 (300pp)

4 **"General Solid State Gas/Smoke Detector Systems"**
Describes semiconductor and ionization chamber systems with some discussion of the use of these with CMOS ICs.
Motorola AN-735 (9pp)

5 **"IC Crystal Oscillators"**
(MONOCHIP)
Covers crystal oscillator basics and interfacing them with device.
Interdesign APN-4 (3pp)

6 **"Integrated High Speed Operational Amplifier"**
(MONOCHIP)
Explains how modern high speed, high stability circuits can be constructed using semicustom IC technology. A representative op amp with a bandwidth of 40 MHz and an open loop gain of 10,000 is presented.
Interdesign APN-7 (7pp)

7 **"Interface Databook"**
Primarily data sheets, but includes the following application notes individually described elsewhere: AN-22, 84, 108, 198, 199.
National $6

8 **"Linear Applications Handbook"**
Published 1980, includes National application notes (AN) 2-4, 13, 20, 21, 23, 24, 29-32, 41, 42, 46, 48, 56, 64, 69-72, 74, 75, 79, 81, 82, 87, 88, 97, 103, 104, 110, 115, 116, 125, 127, 129, 132, 146, 147, 151, 153, 154, 156, 159, 161, 173, 178, 179, 181, 182, 184, 192, 193, 210, 211, 222, 225, 233, 234, 238, 240, 241, 242 and Linear Briefs (LB) 1-29, 32-39, 40-50 individually described elsewhere.
National $16 (623pp)

9 **"Low-Cost Versatile CRT Terminal Using the SND5027 and SND8002"**
(SND5027, SND8002)
Describes the design of a low-cost CRT terminal using two devices that provide virtually all the circuits needed for the display portion of a CRT terminal.
Solid State Scientific AN-303 (10pp)

General (cont)

10 **"Nonlinear Circuits Handbook"**
Covers principles, circuits, performance, specifications, testing and applications for multipliers, dividers, squares, log circuits, multi-function and rms-to-dc converters.
Analog Devices $5.95 (535pp)

11 **"Optoelectronics Handbook"**
Covers discrete LED lamps, LED numeric displays, multidigit numeric displays, bar graphs, and interface devices. Both product descriptions and applications included.
National $6 (160pp)

12 **"Polarity Programmable Peak Detector"**
Details a circuit that gives positive or negative peak detection and reset levels over a ± 10 V range.
Precision Monolithics AN-27 (2pp)

13 **"Rectifier Circuits for Linear IC's"**
(MONOCHIP)
Discusses techniques for designing rectifiers using the components available on semicustom IC's. Design precautions are examined in detail and illustrative diode, peak detector, and averaging rectifier circuits are presented.
Interdesign APN-6 (7pp)

14 **"Simplified Design of Astable RC Oscillators Using the CD4060B or Two CMOS Inverters"**
(CD4060B)
Stresses practical aspects of design and provides easy-to-use algebraic equations that permit values of R and C for a given oscillator frequency to be quickly determined.
RCA ICAN-6883 (2pp)

15 **"Solid-State Devices Manual"**
Provides tutorial information on discrete devices and ICs. with emphasis on consumer, hobbyist and experimenter applications.
RCA SC-16 $5.00 (750pp)

16 **"Summary of Electrical Characteristics of Some Well Known Digital Interface Standards"**
Summarizes the important electrical characteristics of the most commonly accepted interface standards (IEEE488, RS357, RS366, etc.) and offers recommendations on how to use the companies' products to meet those standards.
National AN-216 (15pp)

17 **"Thermal Resistance—A Reliability Consideration"**
Covers the relationship between junction temperature and reliability. Describes a thermal model for plastic dual-in-line packages.
Sprague TP80-2 (9pp)

Industrial Control

18 **"A Modern Infrared Remote Control System"**
(U143M, U327M, U328M, U3034M, U3036M, U3037M, U3038M, U3043M, U250B, U427B, U3870, U4013, U4051, U4052)
Outlines the requirements for a modern IR remote control system and explains how the TFK system solves associated problems. Sample applications include the use of a single transmitter to control eight different appliances.
AEG-Telefunken SI 4.81 (21pp)

© IC MASTER 1984

LINEAR

Displays (cont)

1 **"Basic Routines for EF9365 and EF9366 Graphic Display Processors"**
(EF9365, EF9366)
Presents a selection of Assembly Language programs for the EF9365/6 processors, including programs for generating extended character sets, circles, rings, disks, and convex quadrilaterals.
Thomson CSF Components NA-028A (39pp)

2 **"EF9367 Graphic Display Processor Application Principles"**
(EF9367)
Discusses design considerations and principal applications of the EF9367 display processor in 512x640, 512x768, and 512x1024 resolution devices.
Thomson CSF Components NA-036A (28pp)

3 **"Use of the Extended Character Generator with the EF9340 and EF9341 Display Circuits"**
(EF9340, EF9341)
Explains how to extend the character set provided by the EF9340/1 ICs beyond 128 alphanumeric and 128 semi-graphic characters. A sample hardware implementation and programming are included.
Thomson CSF Components NA-029A (19pp)

4 **"Using the EF9364 Clock Inhibition Signal"**
(EF9364)
Describes the use of the clock inhibition signal on the EF9364 display circuit to inhibit dot clock for retrace blanking.
Thomson CSF Components NA-002A (7pp)

Followers

"Monolithic Operational Amplifiers—The Universal Linear Component"
See (Linear) Amplifiers, Operational (National)

General

5 **"A Cookbook Approach to High Speed Data Acquisition and Microprocessor Interfacing"**
Shows how to design a complex data-acquisition system as a series of building blocks using a mixture of LSI, MSI, SSI and discrete devices.
Intersil Application Bulletin A020 (20pp)

6 **"A Guide to Hybrid Circuit Design"**
Discusses techniques that aid the hybrid designer in the design and development of thin and thick film hybrid MICRO CIRCUITS. Emphasis is placed on assembly techniques and procedures with general design rules that help to avoid common design problems.
Precision Monolithics AN-33 (4pp)

General (cont)

7 **"A Technical Comparison of the Solid State Scientific Video Timer-Controller Family"**
(SND5027, SND5037, SND5057)
Describes the features and operating characteristics of a video timer-controller family.
Solid State Scientific AN-300 (4pp)

8 **"Alarm Circuit"**
(MONOCHIP)
Discusses an alarm sensing circuit capable of driving a loud speaker or LED or triggering a logic level. The design and performance is described in detail, including all component values, layout and characteristics over the military temperature range.
Interdesign APN-1 (7pp)

9 **"Analog Data Manual"**
Covers linear IC processing and design, data sheets and characteristics of operational amplifiers, video amplifiers, power controllers, timers, comparators, memory interfaces, transistor arrays, display drivers, D/A-A/D converters, PLL, microprocessor interface, and radio, audio and TV circuits. 1981.
Signetics $7.00 (448pp)

10 **"Applications Data Book"**
Contains Application Notes 1-17 individually described elsewhere.
Exar (80pp)

11 **"Bipolar Semi-Custom ICs in Non Entertainment Consumer Applications"**
(Monochips)
Discusses a semicustom approach to designing linear bipolar ICs in consumer, medical, telecommunications, military, industrial and automotive products.
Interdesign APN-24 (12pp)

12 **"Building Blocks for the Linear I.C. Designer"**
Presents approximate models for various basic circuit elements. Emphasizes key parameters of circuit and neglects complications.
Analog Devices (29pp)

"CMOS Linear Applications"
See listing under (Digital) CMOS (National)

13 **"Coil Driven Alarm Design Considerations"**
(ICM7220A)
Provides a simple circuit for boosting watch-circuit output to increase the volume of an audible alarm. Sample design problem is included.
Intersil Application Bulletin A031 (2pp)

14 **"Computer Analysis of Linear Semicustom IC's"**
(MONOCHIP)
Describes a computer aided design program jointly developed by Interdesign and UCC. Illustrates the use of this program by analyzing a high performance integrated phase-locked loop.
Interdesign APN-12 (6pp)

LINEAR

General (cont)

"Constant Current LED"
See listing under (Linear) Regulators (National)

1 **"Criteria for Choosing Resins and Evaluation Tests for Discrete and Integrated Power Devices in Plastic Packages"**
Describes the criteria and experimental procedures used in the choosing of moulding resin for plastic packaged devices.
SGS-ATES Technical Note 132 (15pp)

"Custom IC Design Using IL Technology"
See (Digital) IL (Exar)

2 **"Design Aid to Build a Smoke Detector with the SM110 IC"**
(SM110)
The SM110 functions applicable to building a smoke detector are discussed: a MOSFET input smoke sensing comparator, low-battery reference voltage, low-battery detector, internal timing, and output driver. A smoke detector schematic is given, along with application and construction aids.
Siliconix DA78-4 (6pp)

3 **"Function Circuits, Design and Applications"**
Covers design theory and applications for such analog functions as multipliers, dividers, logarithmic amplifiers, exponentiators, RMS converters, and active filters. Includes notes on specifying and testing these functions.
Burr-Brown $29.50 (300pp)

4 **"General Solid State Gas/Smoke Detector Systems"**
Describes semiconductor and ionization chamber systems with some discussion of the use of these with CMOS ICs.
Motorola AN-735 (9pp)

5 **"IC Crystal Oscillators"**
(MONOCHIP)
Covers crystal oscillator basics and interfacing them with device.
Interdesign APN-4 (3pp)

6 **"Integrated High Speed Operational Amplifier"**
(MONOCHIP)
Explains how modern high speed, high stability circuits can be constructed using semicustom IC technology. A representative op amp with a bandwidth of 40 MHz and an open loop gain of 10,000 is presented.
Interdesign APN-7 (7pp)

7 **"Interface Databook"**
Primarily data sheets, but includes the following application notes individually described elsewhere: AN-22, 84, 108, 198, 199.
National $6

8 **"Linear Applications Handbook"**
Published 1980, includes National application notes (AN) 2-4, 13, 20, 21, 23, 24, 29-32, 41, 42, 46, 48, 56, 64, 69-72, 74, 75, 79, 81, 82, 87, 88, 97, 103, 104, 110, 115, 116, 125, 127, 129, 132, 146, 147, 151, 153, 154, 156, 159, 161, 173, 178, 179, 181, 182, 184, 192, 193, 210, 211, 222, 225, 233, 234, 238, 240, 241, 242 and Linear Briefs (LB) 1-29, 32-39, 40-50 individually described elsewhere.
National $16 (623pp)

9 **"Low-Cost Versatile CRT Terminal Using the SND5027 and SND8002"**
(SND5027, SND8002)
Describes the design of a low-cost CRT terminal using two devices that provide virtually all the circuits needed for the display portion of a CRT terminal.
Solid State Scientific AN-303 (10pp)

General (cont)

10 **"Nonlinear Circuits Handbook"**
Covers principles, circuits, performance, specifications, testing and applications for multipliers, dividers, squares, log circuits, multi-function and rms-to-dc converters.
Analog Devices $5.95 (535pp)

11 **"Optoelectronics Handbook"**
Covers discrete LED lamps, LED numeric displays, multidigit numeric displays, bar graphs, and interface devices. Both product descriptions and applications included.
National $6 (160pp)

12 **"Polarity Programmable Peak Detector"**
Details a circuit that gives positive or negative peak detection and reset levels over a ±10 V range.
Precision Monolithics AN-27 (2pp)

13 **"Rectifier Circuits for Linear IC's"**
(MONOCHIP)
Discusses techniques for designing rectifiers using the components available on semicustom IC's. Design precautions are examined in detail and illustrative diode, peak detector, and averaging rectifier circuits are presented.
Interdesign APN-6 (7pp)

14 **"Simplified Design of Astable RC Oscillators Using the CD4060B or Two CMOS Inverters"**
(CD4060B)
Stresses practical aspects of design and provides easy-to-use algebraic equations that permit values of R and C for a given oscillator frequency to be quickly determined.
RCA ICAN-6883 (2pp)

15 **"Solid-State Devices Manual"**
Provides tutorial information on discrete devices and ICs, with emphasis on consumer, hobbyist and experimenter applications.
RCA SC-16 $5.00 (750pp)

16 **"Summary of Electrical Characteristics of Some Well Known Digital Interface Standards"**
Summarizes the important electrical characteristics of the most commonly accepted interface standards (IEEE488, RS357, RS366, etc.) and offers recommendations on how to use the companies' products to meet those standards.
National AN-216 (15pp)

17 **"Thermal Resistance—A Reliability Consideration"**
Covers the relationship between junction temperature and reliability. Describes a thermal model for plastic dual-in-line packages.
Sprague TP80-2 (9pp)

Industrial Control

18 **"A Modern Infrared Remote Control System"**
(U143M, U327M, U328M, U3034M, U3036M, U3037M, U3038M, U3043M, U250B, U427B, U3870, U4013, U4051, U4052)
Outlines the requirements for a modern IR remote control system and explains how the TFK system solves associated problems. Sample applications include the use of a single transmitter to control eight different appliances.
AEG-Telefunken SI 4.81 (21pp)

LINEAR

Industrial Control (cont)

1 **"A ROM-Digital Approach to PWM-Type Speed Control of AC Motors"**
Describes a pulse width modulation scheme to control motor speed. Shows a CMOS-ROM system to provide variable frequency drive for 1, 2, or 3 phase motors.
Motorola AN-733 (12pp)

2 **"A Variable Frequency Control for 3 ∅ Induction Motors"**
Describes a variable frequency, variable voltage drive system for 3-phase inducton motor controls.
Motorola AN-766 (10pp)

3 **"An Electronic Lamp Monitor"**
(ULN-2435A)
Discusses requirements of lamp monitoring systems and describes a new monolithic circuit to monitor all exterior lamps of an automobile.
Sprague TP81-7 (5pp)

4 **"Applications of the CNY70 and K170P Reflective Optocouplers"**
(CNY70, K170P)
The basic operation of reflective optocouplers is explained, and application considerations such as the influence of temperature, ambient light, and distance from the reflecting surface are discussed. Sample applications include the detection of position, motion, and direction.
AEG-Telefunken SI 7.81 (14pp)

5 **"Electronic Controller with an Equilibrium Sustaining Mode"**
(3500 Series)
Discusses a controller formed with two operational amplifiers in a pulse width modulation circuit with feedback. The feedback operates from a heater through the medium being heated to sense amplifiers.
Burr-Brown AN-63 (2pp)

6 **"Infrared Remote Control with TI Products"**
(SN76832, SN76881, SN76882, SN76891)
Describes the design of transmitter and receiver systems capable of implementing highly reliable unobstructed remote control functions for ranges up to 50 feet.
Texas Instruments AR-SGDA001 (12pp)

7 **"Pulsed IR Light Barrier"**
(TDA4180P, U113B)
Describes electro-optical proximity-sensing system using a pulsed infrared light barrier. Provides circuit diagrams for receiver and transmitter, and includes curves for selecting external circuit RC values.
AEG-Telefunken Halbleiter Informationsdienst 1/77 (5pp)

8 **"Real Remote Control"**
(S2742, S2743)
Describes a remote control system using the S2742/2743 with IR transmission. Demonstrates a simple, effective alignment technique.
American Microsystems

9 **"Simplifying High-Efficiency Motor Drive Systems with a New Family of PWM Integrated Circuits"**
(SG1731, SG2731, SG3731)
Describes a pulse width modulator circuit specifically designed for dc motor control.
Silicon General (6pp)

Industrial Control (cont)

10 **"TC900 and TC910 Integrated Motor Speed Regulators"**
(TCA900, TCA910)
Introduces speed regulator basic and describes device performance. Portable and car mounted applications are depicted.
SGS-ATES Technical Note 113 (10pp)

11 **"Temperature Measurement Method Based on Matched Transistor Pair Requires No Reference"**
(MAT-01, OP-10)
Discusses properties of matched transistor pairs, then describes temperature measuring systems built with a matched pair, constant current sources, and a differential amplifier (OP-10).
Precision Monolithics AN-12 (8pp)

12 **"Variable Speed Control System for Induction Motors"**
(MC673, MC688)
Describes control scheme implemented with discrete components and IC logic coupled by an LED and a photo transistor. Gives example of a circuit used to drive a Class F, 60 Hz, permanent-split, capacitor induction motor with a 13 oz. in. load rating.
Motorola AN-575A (5pp)

13 **"μA7392 Motor Speed Controller"**
(uA7392)
Describes device operating principles and performance. Includes schematics, design considerations, and applications in a tape recorder, an optical tach, and for bidirectional motor control.
Fairchild AN-343 (20pp)

Instrumentation

14 **"4½ Digit Panel Meter Demonstrator/Instrumentation Boards"**
(ICL8052A, ICL7103A)
Describes two versions of the complete circuit for a 4½ digit DPM with ±2.000 V full scale and LED readout.
Intersil A019 (8pp)

15 **"A Complete Function Generator System Using the XR2206"**
(XR2206)
A self contained function generator system is described, using the device. Complete circuit connection diagram, parts list and assembly instructions are given for a DC to 100 kHz self-contained function generator system with AM/FM capability and triangle, sine and square wave output.
Exar AN-14 (4pp)

16 **"A Digital Multimeter Using the ADD3501"**
(ADD3501)
Describes a 3½ digit multimeter capable of measuring ac and dc voltages, currents and resistance with the device. Includes circuit diagram.
National AN-202 (4pp)

LINEAR

Instrumentation (cont)

1 **"A Universal Sinewave Converter Using the XR2208 and XR2211"**
(XR2208, XR2211)
A circuit technique is described which can convert any periodic waveform into a low-distortion sinewave. The circuit operation is completely independent of input waveform amplitude and frequency as long as the input signal is periodic and can operate over a frequency range of 1 Hz to 100 kHz.
Exar AN-11 (4pp)

2 **"Building a Battery Operated Auto Ranging DVM with the ICL7106"**
(ICL7106)
Describes a technique for autoranging a battery-operated DVM suitable for panel-meter applications. Includes circuit ideas for measuring conductance, resistance and current, and for 9V and 5V supply operations.
Intersil Application Bulletin A046 (4pp)

3 **"Building an Auto-Ranging DMM with the ICL7103A/8052A A/D Converter Pair"**
(ICL7103A, ICL8052A, ICL8007)
Describes the design and operation of two 10 μV resolution, 4½ digit auto-ranging DMMs using the 7103A/8052A pair.
Intersil A028 (6pp)

4 **"Design Aid of the LD110/LD111 3½-Digit DVM Demonstrator Board"**
(LD110, LD111)
Gives schematics, parts list, and art work for a 3½-digit DVM demonstrator board using the LD110/LD111.
Siliconix DA74-1 (4pp)

5 **"Design for a Battery Operated Frequency Counter"**
(ICM7208, ICM7207A)
Shows how to build a low-cost, battery-operated instrument for measuring both frequency and period, based around a crystal-controlled time-base circuit, a frequency-divider circuit and a counter-display chip. Includes circuit design and board layout.
Intersil Application Bulletin A015 (6pp)

6 **"Dual Polarity 3½ Digit DVM Realized with Simple CMOS Interface"**
(ADC3711, LF11300)
Describes an auto-zero, auto-polarity 3½-digit DVM using the LF11300 and the MM74C928 (ADC3711).
National AN-165 (2pp)

7 **"Everything You Always Wanted to Know About the 8038"**
(ICL8038)
Presents answers to the most frequently asked questions about the 8038 function generator and its applications.
Intersil A013 (4pp)

8 **"How to Build a Battery-Operated Auto-Ranging DVM with the ICL7106"**
(ICL7106)
Describes the design of an autoranging 3½ digit DVM using the ICL7106.
Intersil A046 (6pp)

Instrumentation (cont)

9 **"Implementation of a Scanning Spectrum Analyzer Using the 2920 Signal Processor"**
(2920)
Reviews sampling theory and describes operation of a signal-processing chip used in spectrum analysis for speech processing, industrial control, medical electronics, signal detection and analog signal processing. Includes assembly code listings for processing functions.
Intel AP-29 (23pp)

10 **"Instrumentation Amplifiers—They're Great Problem Solvers When Correctly Applied"**
(MN2200)
Covers basic operation and application considerations for instrumentation amplifiers.
Micro Networks AN202 (4pp)

11 **"LD120/LD121 4½ Digit DVM"**
(LD120, LD121)
Details construction of a DVM using these devices.
Siliconix DA77-2 (4pp)

12 **"LM2907, LM2917 Tachometer/Speed Switch Building Block Applications"**
(LM2907, LM2917)
Covers basic circuit and use. Applications illustrated include: speed switch, analog display drive, automotive tachometer, motor speed controls, skid sensor, A/D converter, frequency doubler.
National Linear Applications Handbook AN-162 (16pp)

13 **"Low Cost Digital Panel Meter Designs"**
(ICL7106, ICL7107)
Supplies complete assembly instructions for Intersil's LCD and LED evaulation kits as well as descriptions of individual components.
Intersil A023 (6pp)

14 **"RMS Converters and Their Applications"**
(LH0091)
Covers RMS converter basics and specifications. Sketches applications including spectrum analysis, harmonic distortion, noise, vibration analysis, and DVM uses.
National Special Functions Databook AN-180 (4pp)

15 **"Solid State Altimeter for Transponder Applications"**
(LX3702)
Describes a solid state altimeter using a pressure transducer. The unit provides an altitude transmission code for use with transponders, plus digital readout.
National AN-109 (8pp)

"The Integrating A/D Converter"
See (Interface) Converters (Intersil)

16 **"Thermometer for Albacore Fishing"**
(MONOCHIP)
Discusses characteristics of a thermometer used for albacore fishing built on a semi-custom chip. Includes schematic and block diagram.
Interdesign APN-21 (3pp)

17 **"Waveform Generator"**
(MONOCHIP)
Describes using two of the devices in a wave form generator application that produces sine, triangle, and square wave outputs. Provides schematics and a discussion of performance.
Interdesign APN-8 (10pp)

© IC MASTER 1984

LINEAR

Modulators

1 **"Deadband Control with the SG1524 Regulating Pulse Width Modulator Circuit"**
(SG1524, SG2524, SG3524)
Discusses techniques to control the amount of deadband in push-pull inverter applications.
Silicon General Linear Brief 6 (1pp)

2 **"Designing with the SG1525/1527 Series of Pulsewidth Modulators"**
(SG1525, SG1527)
Discusses application of pulsewidth modulator ICs in a variety of output configurations, including bipolar power transistor, power FET, low-power transformer and single ended.
Silicon General ANSG1525/1527 (7pp)

3 **"Simplifying Converter Design with a New Integrated Regulating Pulse Width Modulator"**
(SG1524, SG2524, SG3524)
Describes various functions within the device and describes such applications as a low current polarity converter, a DC to DC converter, and a +5 to ±15V flyback converter.
Silicon General (7pp)

4 **"The CA1524E Pulse-Width Modulator-Driver for an Electronic Scale"**
(CA1524E)
Details the application of the CA1542E pulse-width modulator IC as the driving source for an electronic scale.
RCA ICAN-7174 (2pp)

Multipliers

5 **"Analog Multiplier"**
(RC4200)
Includes functional description, electrical characteristics and circuit designs for multiplier and divider, square root, squaring and rms-to-dc converter circuits.
Raytheon (23pp)

6 **"Analog Shaping"**
(4301)
Describes the use of the 4301 multifunction circuit which has the transfer function XY/Z. Includes rms to dc conversion, exponentiation, trigonometric functions, vector computation, and use as a log amp.
Burr-Brown AN-70 (5pp)

"Function Circuits, Design and Applications"
See listing under (Linear) General (Burr-Brown)

7 **"Linear-Antilog Voltage Controlled Amplifiers"**
(SSM2000, SSM2020)
Discusses control circuits, voltage controlled amplifiers, and a four quadrant multiplier among other applications.
Solid State Micro Technology for Music (9pp)

Multipliers (cont)

8 **"Log/Lin Multiplier"**
(MONOCHIP)
Describes an IC multiplier which achieves low noise and distortion. Covers all phases of development from initial concept and breadboarding to integration in an audio sweep function generator.
Interdesign APN-3 (11pp)

9 **"Multiplier Application Guide"**
(AD530, AD531, AD532, AD533, AD534, AD536)
Explains multiplier basics, upkeep, and use in a variety of applications including instrumentation functions, signal generators and filters, and to augment the performance of other circuits.
Analog Devices (40pp)

10 **"Wideband Amplifier/Multiplier"**
(SG1402)
Operation and applications of the SG1402. Describes use as a single-ended variable gain amplifier, a modulator, and a demodulator.
Silicon General Linear IC Product Guide (4pp)

Phase Locked Loops

11 **"The Technique of Direct Programming by Using a Two-Modulus Prescaler"**
(MC12009, MC12011, MC12013)
Offers a new approach to the construction of a phase-locked-loop divider.
Motorola Semiconductor AN-827 (6pp)

"A Medium Cost PLL Varactor Tuning System Utilizing Off-the-Shelf Logic"
See listing under (Linear) Consumer, TV (Motorola)

12 **"A New Generation of Integrated Avionic Synthesizers"**
Discusses several different types of servo phase locked loop systems and describes a synthesizer for avionic equipment.
Motorola AN-553 (9pp)

"A Phase-Locked Loop Tuning System for Television"
See listing under (Linear) Consumer, TV (Motorola)

13 **"A Wide Tracking Range Precision PLL System Using the XR2212 and XR4151"**
(XR2212, XR4151)
A two-chip PLL system is described which offers extremely wide tracking range without harmonic locking.
Exar AN-12 (3pp)

14 **"Applications of the COS/MOS CD4059A Programmable Divide-by-N Counter: Digital Frequency Synthesis for FM Tuners and CB Transceivers"**
(CD4059)
Discusses frequency synthesis using the counter for an FM digital tuner and a CB transceiver.
RCA ICAN-6374 (12pp)

LINEAR

Phase Locked Loops (cont)

1 **"Clock Recovery System"**
(XR2212, XR320)
Describes the design of a PLL system that can be used to recover the clock from a serial data stream using NRZI protocol with excellent stability.
Exar AN-19 (4pp)

2 **"Crystal Switching Methods for MC12060/MC12061 Oscillators"**
(MC12060, MC12061)
Discusses methods of using diodes as rf switches to select crystals for these oscillators. The techniques are useful for electronic selection of one of a group crystals with minimum disturbance to the series resonant frequency of the selected crystal.
Motorola AN-756 (5pp)

3 **"Designing Wide Tracking Phase-Locked Loop Systems"**
(XR2212, XR320, XR084)
Describes the design of a tracking PLL with a tracking range of greater than 100:1, with no harmonic locking problems.
Exar AN-18 (4pp)

4 **"Low-Power Digital Frequency Synthesizers Utilizing COS/MOS ICs"**
(CD4000 Series)
Reviews digital phase-locked loops. Describes their implementation with CMOS for use in FM receiver synthesizers, both heterodyne and prescaling types.
RCA ICAN-6716 (15pp)

5 **"Phase-Locked Loop Design Fundamentals"**
(MC4016, MC4024, MC4044, MC4316, MC4324, MC4344)
Outlines fundamental-design concepts for phase locked loops implemented with ICs. Gives equations using Laplace Transforms needed to evaluate the basic loop performance and briefly describes a design using MC4000 series devices.
Motorola AN-535 (11pp)

6 **"Precision Narrow-Band Tone Detector"**
(XR2213, XR2208)
Describes the use of the XR2213 PLL in conjunction with the XR2208 analog multiplier as a frequency mixer.
Exar AN-21 (4pp)

7 **"Precision PLL System Using the XR2207 and the SR2208"**
(XR2207, XR2208)
Defines phase locked loop parameters and describes this two-chip PLL system. Includes circuit interconnections for both single supply and split-supply operation. Also gives PLL design equations.
Exar AN-06 (6pp)

8 **"SL650 Phase-Locked Loop Applications"**
(SL650, SL651)
Describes the circuit and application of this device that can operate to 0.5 MHz. Applications: Modulators-AM, FM, FSK, PAN, SCAM, tone burst, phase shift, delta, PWM, Waveform Generators-sine, triangle, mark/space ratio, staircase: Demodulators; Modem Systems, and a Digital Voltmeter.
Plessey Semiconductor SL650 Applications (32pp)

Phase Locked Loops (cont)

9 **"Sinusoidal Output from XR-215 Monolithic PLL Circuit"**
(XR215)
Discusses obtaining a sinusoidal output signal which is synchronozed to a desired reference or clock output using the device. Provides schematics of device and application.
Exar AN-09 (2pp)

10 **"The RCA COS/MOS Phase-Locked-Loop: A Versatile Building Block for Micro-Power Digital and Analog Applications"**
(CD4046A)
Discusses PLL basics, characteristics of device, and circuit elements. Describes application in FM demodulation, a frequency synthesizer, split-phase synchronization and decoding, and PLL lock detection.
RCA ICAN-6101 (4pp)

11 **"The Solid State Scientific Phase-Locked Loop"**
(SCL4046B, SCL4446B)
Reviews fundamentals and design considerations of phase-locked loops and briefly describes application in FM demodulation, frequency shift keying, PLL lock detection, AM detection, frequency synchronization, signal conditioning and frequency synthesis.
SSS AN-112 (15pp)

12 **"XR-210/XR-215/XR-S200 Phase Locked Loops"**
(XR210, XR215, XRS200)
Discusses the various parameters and equations used in applying the XR-210, XR-215, and XR-S200 phase locked loops.
Exar AN-22 (12pp)

Photosensitive Devices

13 **"Applications of Reticon Photodiode Arrays in Electron and X-Ray Detectors"**
(RL Series)
Describes the use of self-scanning photodiode arays for detecting soft X-rays (1 to 10A) and electrons in the 10 to 100 KEV range.
Reticon AN-101 (4pp)

14 **"Light Sense"**
Covers optoelectronic sensors and systems including light activated switches and selfscanned photodiode arrays.
Integrated Photomatrix $12.95 (147pp)

15 **"Understanding Optronics"**
Covers the basic concepts and areas of optoelectronic technology, including light-emitting diodes, photodetectors, photocoupled systems, and lasers. Includes many applications of optoelectronic devices.
Texas Instruments LCB 5472 (225pp) $6.95

Power Control

16 **"Applications of the VN10KM MOS Power FET"**
(VN10KM)
Reviews MOS power technology and characteristics, including load considerations, techniques for interfacing to logic circuits, drive techniques, and example applications.
Siliconix AN79-7 (8pp)

LINEAR

Power Control (cont)

1 **"Controlling Secondary Breakdown in Bipolar Transistors"**
(LT10)
Describes a resistive ballasting technique that allows bipolar single and Darlington power transistors to operate at higher voltages and power densities by controlling secondary breakdown.
National Semiconductor TP-16 (4pp)

"Features and Applications of RCA IC Zero-Voltage Switches"
See listing under (Interface) Switches. (RCA)

2 **"ICs for Phase and Burst Control of SCR of Triac"**
(L120, L121)
Examines 12 ICs which are suitable for SCR and Triac firing. Description includes diagrams, equations, and applications in ON-OFF control and proportional control.
SGS-ATES Technical Note 116 (12pp)

3 **"Motor Speed Applications Using the TDA1085A"**
(TDA1085A)
Discusses control of line-powered resistive and inductive loads using phase control in closed-loop system with tacho-frequency or analog voltage feedback.
Plessey Semiconductor (20pp)

4 **"Phase Control U111B"**
(U111B)
Provides detailed circuit description of bipolar IC forming the heart of a phase controller for varying power to household appliances. Includes example application for controlling universal motor speed.
AEG-Telefunken Halbleiter Informationsdienst 10.78 (16pp.)

5 **"Phase Control of AC Power with the SL440"**
(SL440)
Describes the operation of the SL440 power control circuit, and supply requirements. Applications include use with inductive loads, three phase systems, lighing, heating, motor and power supply control.
Plessey Semiconductor (38pp)

6 **"Some Applications of a Programmable Power Switch/Amplifier"**
(CA3094)
Brief circuit description of CA3094. Device delivers three watts average power, 10 watts peak power to external load. Applications include Class A power amplifiers and driver amplifiers for complementary transistors, wideband power multivibrators, oscillators, comparators, voltage regulators, analog timers, and motor-speed controllers.
RCA ICAN-6048 (12pp)

7 **"The Power MOSFET, a Breakthrough in Power Device Technology"**
(IVN5200, IVN5201)
Describes geometries of various power FET devices and discusses their operating limitations, linear characteristics, safe operating areas and radiation effects.
Intersil A033 (14pp)

8 **"Triac Phase Control Circuits"**
(MONOCHIP)
Illustrates a phase control circuit fabricated on a semi-custom chip. Device provides power supply, 60 Hz zero crossing detector and pulse generator, time delay ramp generator, and triac tigger pulse generator.
Interdesign APN-15 (7pp)

Power Control (cont)

9 **"Two-Point Driver to Temperature Controlling of Inductive Loads with U106BS"**
(U106BS)
Describes use of an integrated zero-crossing switch to control an air-conditioner compressor motor for maintaining a preset temperature.
AEG-Telefunken Halbleiter Informationsdienst 4.77 (4pp)

10 **"Using the Power MOSFET as a Switch"**
(IVN6000, IVN5200, IVN5001)
Details the fine points of power MOSFETs with discussions on switching and conduction characteristics, power loss and junction temperature calculation, 50A, dV/dt limitations and multiple device operation.
Intersil A036 (32pp)

11 **"Using the VN64GA High Current, High Power MOS Power FET"**
(VN64GA)
Covers geometry and operating characteristics of MOS power FETs; including examples of linear and switching applications.
Siliconix AN79-5 (6pp)

12 **"Zero-Voltage Switch U217B is Two-Step Temperature Controller with Superimposed Proportional Behavior"**
(U217B)
Offers circuit description and diagrams for applying a zero-voltage switch in a proportional temperature controller.
AEG-Telefunken Halbleiter Informationsdienst 12.78 (2pp.)

Power Supplies

13 **"A Dynamically Balanced 5V, 55A Line-Operated Switching Power Supply"**
(LAS3840, LAS8101, LAS723B)
This note describes a 5V, 55A push-pull switching power supply incorporating a simple technique for achieving transformer volt-time balancing.
Lambda Semiconductors AN 2-2 (20pp)

14 **"A Flyback Switch Mode Power Supply Using the UAA4006-DP"**
(UAA4006)
The basic operation of the UAA4006 IC is explained along with considerations involving its application to flyback switching power supplies.
Thomson CSF Components NA-027R1A (14pp)

15 **"A New Feedback System for Isolated Closed Loop Control"**
(UC1901)
Describes use of the UC1901 to solve problems associated with closing a feedback loop across a voltage isolation boundary. Implementation of each of the IC's operational blocks is discussed along with applications in practical power system designs.
Unitrode (8pp)

16 **"A New Integrated Circuit for Current Mode Control"**
(UC1846)
Describes the advantages of current mode control over PWM approaches to switching power converters, and illustrates the use of the UC1846 current mode control IC in several practical examples.
Unitrode (7pp)

LINEAR

Power Supplies (cont)

1 **"A Second-Generation IC Switch Mode Controller Optimized for High-Frequency Power MOSFET Drive"**
(U1525A, U1527A)
Describes the UC1525A and its complementary output version, the UC1527A—improved switch mode controllers that include more power supply control functions in the chip and provide an optimum interface for driving high-current power devices.
Unitrode U-89 (11pp)

2 **"Adequate Switching Transistor Drive Produces Fast Transistor Switching"**
(LAS8100)
The LAS8100 solves the problem of providing proper base or gate drive for switching transistors and FET output devices, guaranteeing optimum turn-on and turn-off drive.
Lambda Semiconductors AN 3-1 (6pp)

3 **"Applying the UC1840 to Provide Total Control for Low-Cost, Primary-Referenced Switching Power Systems"**
(UC1840)
Explains how the UC1840 off-line controller simplifies the interface between the control IC and the power switch, eliminating many of the isolation boundary problems of a secondary referenced system.
Unitrode U-91 (10pp)

4 **"Designing an Efficient and Economic "Flyback" Switch Mode Power Supply with TEA 1001 SP and UAA 4001-DP"**
(TEA1001, UAA4001)
The functions of the TEA1001 and UAA4001 ICs are described along with applicable specs, relationships, and schematics for use in flyback switching power supplies.
Thomson CSF Components NA-011A (19pp)

5 **"LAS 3840 Eliminates Transformer Unbalance in Double-Ended Switching Converters"**
(LAS3840)
Reviews the significance of transformer balance in double-ended switching converters and demonstrates the use of the LAS 3840 IC in a 15V to 2V push-pull DC-to-DC converter which eliminates imbalance.
Lambda Semiconductors AN 2-1 (12pp)

6 **"Optimum Base Drive and Protection of Switching Transistors Using the UAA4002"**
(UAA4002)
After discussing the key parameters of power transistors requiring monitoring in switching mode, this note gives a functional description of the UAA4002 along with design precautions. Sample applications include an 8A, 400V switch, a 150W forward-type power supply, and a 200A, 700V transistorized switch.
Thomson CSF Components NA-031A (38pp)

7 **"Output Supervisory Circuits: A New Family of Power Supply Control Devices"**
(SG1543)
Describes ICs that monitor and control the outputs of sophisticated power supplies. Functions provided include overvoltage and undervoltage sensing, current sensing and SCR crowbar firing.
Silicon General AN1542, 1543, 1544, 3523 (8pp)

Power Supplies (cont)

8 **"Power Supply Building blocks"**
(MONOCHIP)
Describes circuit blocks used in power supply circuits. They include: bandgap voltage regulator, bandgap reference, zener reference and amplifier, start-up circuit, differential amplifier stage, and Darlington pass transistor. Includes schematics.
Interdesign APN-18 (5pp)

9 **"Power Supply Circuits Head for Simplicity by Integration"**
Describes several integrated circuits designed specifically for simplifying switching power supply control and improving circuit reliability.
Silicon General (10pp)

10 **"Power Supply Design Using the ICL8211 and ICL8212"**
(ICL8211, ICL8212)
Describes use of these devices as positive and negative voltage regulators, constant current sources, high voltage and overvoltage protection circuits, supply window detectors and power failure-shutdown systems.
Intersil A027 (8pp)

11 **"Power Switch Drivers: New IC Interface Building Blocks for Switched-Mode Converters"**
(SG1627, SG1629)
Details the characteristics and performance of the SG1627/9 designed to interface between the control circuitry for switch mode converters and their high power output stages.
Silicon General (8pp)

12 **"Protect Your Switchers with Digital Current Limiting"**
(SG1549)
Describes operation and application of a current sense latch IC in switching power supplies to provide pulse-by-pulse current limiting.
Silicon General ANSG1549 (4pp)

13 **"RC4193 Micro-Power Switching Regulator"**
(RC4193)
Describes the operating principles, electrical characteristics, and several applications of a micro-power switching regulator.
Raytheon Semiconductor AN26 (12pp)

14 **"Simplified Design of a 220V, 100W Flyback Switch Mode Power Supply Using the TEA 1001-SP"**
(TEA1001)
Explains how the design of a 100W converter with fully protected output is simplified by the use of the TEA1001-SP and a BUV46 high-voltage transistor.
Thomson CSF Components NA-014A (9pp)

15 **"Simplified Design of a 220V, 100W Flyback Switch Mode Power Supply Using the UAA4001-DP"**
(UAA4001)
This note details the functions, operations, and relevant parameters of the UAA 4001-DP, a special-purpose IC which directly controls the base of the switching transistor as well as handling regulation and safety functions.
Thomson CSF Components NA-019A (9pp)

LINEAR

Power Supplies (cont)

1 **"Switchmode Converter Topologies — Make Them Work for You"**
Provides a broad view of the variety of switch-mode converter topology options available. Discusses synthesis procedures for modifying known circuits and generating new circuits including duality, bilateral inversion and combinations of regulators and dc transformers.
Intersil A035 (32pp)

2 **"The Design of Switchmode Converters Above 100 kHz"**
Comprehensive discussion of circuit topology, components, and layouts in designing high frequency converters. Discusses cost tradeoffs and size/volume reduction tradeoffs.
Intersil A034 (20pp)

3 **"The Integration of Switching Power Supply Circuitry"**
(SG1525/1527, SG1526)
Reviews past approaches for controlling switching power supplies, and describes new ICs with integrated control/driver functions.
Silicon General (9pp)

4 **"The Output Supervisory Circuit: A New Analog LSI Circuit For Power Supply Control"**
(SG1543, SG2543, SG3543)
Describes the SG1543, an IC that monitors and controls the output of a power supply system. Includes diagrams, schematics and typical applications.
Silicon General (7pp)

5 **"The UC1524A Integrated PWN Control Circuit Provides New Performance Levels for an Old Standard"**
(UC1524A)
The added features of the UC1524A (higher power capability, higher operating frequencies, PWM latch, undervoltage lockout, better trimming are described.
Unitrode U-90 (12pp)

Preamplifiers

"Audio Handbook"
See listing under (Linear) Consumer, Audio (National)

6 **"Audio Preamplifiers"**
(MONOCHIP)
Provides schematics and parameters for using the device in three separate preamplifier configurations.
Interdesign APN-11 (6pp)

Regulators

7 **"A New Approach to Switching Regulators"**
Describes a 24 volt 3 ampere switching mode supply which operates at 20 kHz from as 120 volt AC line with 70% efficiency. Briefly discusses load-line shaping to reduce power losses and to reduce noise.
Motorola AN-719 (11pp)

Regulators (cont)

8 **"Applications of the CA3085 Series Monolithic IC Voltage Regulators"**
(CA3085)
Circuit description of positive regulators with output currents up to 100 milliamperes from −55°C to +125°C. Applications include high-current and constant-current regulators; switching, dual-tracking and high-voltage regulators. Use as a general purpose amplifier, and various methods of current limiting are mentioned.
RCA ICAN-6157 (11pp)

9 **"CA1524G Series Offers Efficiency in Power-Supply Designs"**
(CA1524G)
Describes the features, capabilities, and operation of the CA1524G series of pulse-width-modulated switching regulators and explains the advantages offered by this series in switching power-supply designs. Also lists power devices recommended for use with CA1524G-series IC's in various switching power-supply configurations.
RCA MSR-310 (12pp) .65¢

10 **"Control Circuit Unit and Application Manual"**
(uPC1042)
Describes control circuit unit used for board testing of the switching regulator control circuit (μPC1042). Provides application schematics, components table, and wiring diagrams.
NEC (5pp)

11 **"Designing Around the L200 Variable Voltage/Current Regulator IC"**
(L200)
Discusses circuit designs for variable voltage and current regulators, motor-speed control, remote voltage control and battery chargers.
SGS-ATES DN318 (7pp)

12 **"L200 1A/15V Switch Mode Regulator"**
(L200)
Provides circuit-design equations and discusses application constraints for using a programmable voltage and current regulator as a switching power-supply regulator.
SGS-ATES DN319 (8pp)

13 **"LAS6300 DC Motor Switching Control Applications"**
(LAS6300)
Three types of 6300-based switching dc motor control circuits are covered: constant voltage, constant speed, and constant torque. Design steps and examples are included.
Lambda Semiconductors AN 1-4 (7pp)

14 **"LAS6300 Inverting and Step-Up Applications"**
(LAS6300)
This note describes the use of the LAS6300 in a noninverting step-up converter, an inverting step-up converter, and a Cuk converter, which provides both inverted step-up and step-down operation.
Lambda Semiconductors AN 1-3 (8pp)

15 **"LAS6300 Series Applications Information"**
(LAS6300)
Gives design equations for the LAS6300 monolithic switching regulator control circuit applied to single-output and multiple-output 5V, 5A dc-to-dc converters.
Lambda Semiconductors AN 1 (21pp)

16 **"Linear Voltage Regulators"**
(Monochip)
A reference book on linear voltage regulators for the semicustom IC designer.
Interdesign APN-27 (16pp)

LINEAR

Regulators (cont)

1 **"MOE 6047 Building Block"**
(MONOCHIP)
Discusses circuit with a bandgap regulator and matched current sources for use in D/A converters or as precision current sources. Provides schematics and test data.
Interdesign APN-19 (5pp)

2 **"On the Stability of 1.2V References"**
(AD589, ICL8069, LM113, LM313)
Although 1.2V IC reference diodes using the bandgap principle may offer excellent drift characteristics with extremely low power consumption, they tend to oscillate with certain combinations of reverse current and shunt capacitance.
Analog Devices (1p)

3 **"Protect your Switchers with Digital Current Limiting: A New Current Sense Latch IC Provides Pulse-by-Pulse Control"**
(SG1524)
Discusses operation of a current sensing latch that operates at power supply switching frequencies for fast turn-off on current overload.
Silicon General SG1524 (4pp)

4 **"Resolving the Problems of Switching Mode Power Supplies with the ZN1066"**
(ZN1066)
Describes switching mode power supplies and problems involved in using, including current limit and switching transistor protection, low voltage cutoff, and impulse starting.
Ferranti (20pp)

5 **"Using a Dual-Polarity, Tracking Voltage Regulator"**
(SG1501, SG2501, SG3501)
Describes the circuit and use of the SG1501 series of dual regulators.
Silicon General Applications Bulletin 1 (6pp)

6 **"Voltage Regulator Handbook"**
(LM109, LM117, LM120, LM123, LM125, LM129, LM136, LM137, LM150, LM199, LM320, LM340, LM341, LM7800, LM78L00)
Covers product selection; heat flow and thermal resistance; commercial and custom heat sinks; applications of positive, negative and dual regulators; power supply design and includes data sheets for the product families listed above.
National Voltage Regulator Handbook, $7.00 (139pp)

Telecommunications

7 **"3044-3045 DTMF Group Filters"**
(ITT3044, ITT3045)
Explains dual-tone multifrequency signaling and the demands on a DTMF receiver.
Aptek Microsystems (2pp)

Thermal Considerations

8 **"A Simple Thermal Analysis Program for Integrated Circuits"**
(MONOCHIP)
Presents a thermal analysis program for determining the temperature at any point on an IC.
Interdesign APN-16 (7pp)

"Low Cost LED Thermometer"
See listing under (Linear) Transducers. (National)

"Micropower Thermometer"
See listing under (Linear) Transducers. (National)

9 **"Mounting Procedure for, and Thermal Aspects of, Thermopad Plastic Power Devices"**
Covers various methods of mounting and heat-sinking Motorola case number 77, 90, and 199 plastic power devices. Also discusses thermal resistance considerations, lead forming, and circuit board cleaning.
Motorola AN-290B (9pp)

10 **"Mounting Techniques for Metal Packaged Power Semiconductors"**
Discusses preparation of mounting surfaces, using thermal compounds, and fastening techniques. Gives typical interface thermal resistance for a number of packages.
Motorola AN-599 (5pp)

11 **"Transient Thermal Resistance—General Data and Its Use"**
Discusses transient thermal resistance and its use and describes methods using various degrees of approximations to determine the junction temperature rise of a device. Also covers the concept of a duty cycle family of curves to simplify calculation of junction temperature rise under a repetitive pulse train.
Motorola AN-569 (15pp)

Timers

12 **"A 4-Digit, 7-Function Stop Watch/Timer"**
(MM5865)
Gives detailed instructions for the circuit and construction of a 4-digit, 7-function timer with a display resolution of 0.01, 0.1, and 1 second, using the MM5865.
National MOS/LSI Databook AN-169 (14pp)

13 **"MM5865 Universal Timer Applications"**
(MM5865)
Provides block diagram and system description, discusses general timing and programming capabilities, suggests timing and counting applications.
National MOS/LSI Databook AN-168 (10pp)

14 **"Precision Timer"**
(ZN1034E)
Explains the device and its use in various applications including a wiper control, a metronome, and a battery charger.
Ferranti Electric (19pp)

© IC MASTER 1984

LINEAR

Timers (cont)

"Single-Chip Frequency Synthesizer Employing the XR2240"
(XR2240)
Describes use of this timer/counter as a single-chip frequency synthesizer: fo = f, (m/n + 1) Where fo <200 kHz. Describes generating 100 Hz synchronized to 60 Hz line.
Exar AN-07 (3pp)

2 **"The LX1602A Pressure Transducer and Altimeter Applications"**
(LX1602A)
Describes how to use this transducer along with additional electronics to build an altimeter that operates over a range of − 1,000 feet to + 50,000 feet.
National AN-91 (3pp)

3 **"Using National Clock Integrated Circuits in Timer Applications"**
(MM5309, MM5311, MM5312, MM5315)
Describes demultiplexing techniques to generate time intervals and low frequency square waves. Gives as an example a failsafe lighting timer.
National MOS/LSI Databook AN-143 (4pp)

Transducers

4 **"Accuracies of the AD590"**
(AD590)
Tables of maximum errors for device by grade involving limited temperature spans.
Analog Devices (4pp)

5 **"Application Circuits of Temperature Sensor and Temperature Controller IC's"**
(uPC616, uPC3911)
Provides device characteristics and four basic applications with diagrams.
NEC (6pp)

6 **"Crystal Oven Controller and Precision Voltage Reference"**
(LM199, LM299, LM399, LM199A, LM299A, LM399A)
Shows the use of the LM199 both as an oven temperature controller and a voltage reference at the same time.
National Linear Applications Handbook LB-31 (2pp)

7 **"Installation Ideas for Pressure Transducers"**
(LX1600, LX1700, LX1400, LX1701)
Provides suggestions for mounting National transducers for various applications. Includes diagrams and typical mounting configurations.
National AN-92 (4pp)

8 **"LX Series Pressure Transducers: Design and Applications Information"**
(LX1600A, LX1601A, LX1602A)
Describes hybrid transducer circuit and applications, including pressure to frequency converter, latching altitude detector, digital readout barometer and altimeter.
National AN-94 (8pp)

Transducers (cont)

9 **"Monolithic Analog Level Detectors"**
(TL489, TL487, TL490, TL491)
Describes cost-effective solutions to level-sensing applications such as warning signal indicators, A/D converters, industrial controls, audio level indicators, and light intensity or frequency detection.
Texas Instruments CL-410A (10pp)

10 **"Pressure Transducer Handbook"**
Supplies product descriptions and talks about related topics including installation, fluid flow, auto-referencing and signal conditioning. Covers applications in the acoustic, medical, and automotive areas.
National Semiconductor $3 (130pp)

11 **"Pressure Transducer Load Cell"**
(LX1700G)
Describes use of LX1700G pressure transducer to measure weight.
National AN-95 (4pp)

12 **"Pressure Transducers as Accelerometers"**
(LX1700G)
Discusses uses of accelerometers and describes scheme of converting LX series pressure transducers to cover ranges from fractions to thousands of g's.
National AN-96 (4pp)

13 **"REF-02 Temperature Controller"**
(CMP-02, REF-02)
Describes temperature control using the REF-02 and the CMP-02 comparator.
Precision Monolithics AB-4 (1pp)

14 **"Temperaure Compensation Methods for the Motorola X-ducer Pressure Sensor Element"**
Presents techniques for temperaure compensation of both span and offset voltage for the X-ducer piezoresistive pressure sensor. The techniques use relatively simple passive elements to generate temperature-dependent voltages that act counter to the temperature characteristics of the transducer.
Motorola Semiconductor AN-840 (20pp)

15 **"The Multi-Level Switch Kit, Part No. SK1007"**
Details the use of any LX series pressure transducer to produce a high level analog output as well as three independent switch points.
National TB-1 (2pp)

16 **"Thermometer Application of the REF-02"**
(REF-02)
Discusses thermometer essentials bandgap voltage reference theory, and basic circuit design using device.
Precision Monolithics AN-18 (4pp)

17 **"Transducer Fluid Filled Option"**
Describes the "Fluid-Filled" methods of protecting transducers from hostile environments. Rates the resistance of silicone rubber to some common fluids.
National TB-8 (2pp)

18 **"Transducer Interfacing Handbook"**
Basic guide to analog signal conditioning required to excite and amplify the output of commonly used input transducers. Describes over 100 applications to the most popular kinds of transducers for sensing temperature, pressure, force, flow and level.
Analog Devices $14.50 (254pp)

LINEAR

Transducers (cont)

1 **"Transducer Sensor Diaphragm 15 Million Cycle Life Test"**
Findings in the continuing test of National's transducer sensing elements—a silicon membrane approx. 1 mil thick.
National TB-3 (1pp)

2 **"Transducers in Fluid Flow Applications"**
(LX1602A)
Discusses application of LX1602A in pressure vessel, open flow and closed flow applications.
National AN-93 (8pp)

3 **"Use of the SK1007 Pressure Transducer Kit in Vault Alarm Systems"**
Describes application of this multi-level switch kit with a pressure transducer in vault alarm systems.
National TB-7 (2pp)

Video

4 **"External Synchronization System on EF9364 Display Circuit"**
(EF9364)
Explains the signals used and the modifications required to superimpose text given by the EF9364 on a 625-line TV image.
Thomson CSF Components NA-010A (3pp)

5 **"Synchronizing the EF9340 for Incrustation"**
(EF9340, EF9341)
This note introduces a system that allows the EF9340 to be synchronized with an external video signal for incrusting a character string into a video image.
Thomson CSF Components NA-020R1A (10pp)

Video Displays

6 **"CDP1800-Based Video Terminal Using the RCA Video Interface System"**
(CDP1869, CDP1870, CDP1876)
The VIS chip set for controlling video terminals, industrial displays, and broadcast-television text overlays is described in detail with a sample implementation for a low-cost 40-character x 24-line VDT.
RCA ICAN-7032 (36pp)

Voltage References

7 **"A Micropower Voltage Reference"**
Describes a voltage reference made by operating a JFET slightly below pinch-off along with an op amp to convert current to voltage.
National Linear Applications Handbook LB-34 (2pp)

"Analog Products: Features and Applications"
(See listing under (Linear) Amplifiers, Operational (PrecisionMonolithics Inc.)

Voltage References (cont)

"Crystal Oven Controller and Precision Voltage Reference"
See listing under (Linear) Transducers (National)

8 **"Precision Voltage References for the MC10315/MC10317 Flash A-D Converters"**
(MC10315, MC10317)
The MC10315 and MC10317 flash A/D converters have a low reference input resistance, thus requiring a significant current be supplied from a precision source. Most precision monolithic voltage references available cannot supply the required current directly, and therefore a current booster is necessary. Several circuit configurations are described which can be used to supply the reference voltage, and current, at the stability required by the A/D converters.
Motorola Semiconductor AN-877 (10pp)

MEMORY

9 **"Printed Circuit Board Layout for BYTEWIDE"**
Presents the issues involved in minimizing noise in PC board layouts and their application to Bytewide memory designs.
Mostek 1982/83 Memory Designers Guide IV-1 (6pp)

Analog

10 **"A Programmable Binary-Analog Correlator"**
(BAC-32)
Describes device and its capability to perform various mathematical operations like convolution and correlation. Applications such as filtering, correlation, decoding, and chirp detection are shown.
Reticon AN-106 (14pp)

11 **"A Tapped Analog Delay for Sampled Data Signal Processing"**
Introduces tapped analog delays and gives various applications previously accomplished by digital techniques.
Reticon AN-105 (11pp)

12 **"A Time Base Compressor for Low-Frequency Chirp-Z Transforms"**
(R5601)
Examines time base compression (TBC) of data recorded for analysis. Illustrates implementation of a TBC system using the device and low-cost digital memories. Block and timing diagrams are supplied.
Reticon AN-115 (18pp)

13 **"Acoustic Applications of Serial Analog Delay Devices"**
(SAD1024)
Covers use in reverberation, vibrato, chorus, wow and flutter control plus considerations in using this device.
Reticon AN-104A (8pp)

14 **"Analog Analog Correlator/Convolver"**
Presents an LSI discrete-time processing device capable of performing the convolution or correlation of two analog signals at clock rates up to 5 MHz.
Reticon AN-116 (4pp)

© IC MASTER 1984

MEMORY

Analog (cont)

1 **"Charge Transfer Devices for Sampled-Data Processing"**
Discusses the application of charge transfer devices to analog and digital signal processing. Compares CTD devices. Describes Tapped Analog Delay, the Binary Analog Correlator, the Analog Correlator and the Transversal Filter.
Reticon AN-114 (11pp)

2 **"MOS Delay Lines"**
(DM8000, DM8510, DM8830)
Covers use of MOS shift registers to build delay lines.
National MB-4 (2pp)

3 **"Serial Operation of Clocked Analog Delay Lines to Obtain Long Delay"**
(SAD1024A)
Describes advantages, coupling, and performance of device.
Reticon AN-109 (8pp)

Character Generators

4 **"128 Characters with the DM8678"**
(DM8678)
Describes the control logic necessary to generate 128 characters and attributes.
National Memory Applications Handbook (9pp)

5 **"7 x 9 Display Character Generator"**
Uses three MOS ROMs and some TTL logic to create a font of 64 7 x 9 dot-type characters. A circuit diagram and suggested character forms are provided.
National MB-13 (2pp)

6 **"DM8678 Bipolar Character Generator"**
(DM8678)
Explains the operation of the device and the various features which include circuit address latches, the line counter, the 7-bit shift register, and the output buffer.
National AN-167 (4pp)

7 **"DM8678 Character Generator Emulator"**
(DM8678)
Describes a field programmable emulator to be used when developing new character fonts or graphic symbol sets for the DM8678.
National Memory Applications Handbook (2pp)

8 **"Digital Display Systems"**
Using TTL compatible MOS ROMs to generate displays. Gives circuit diagrams and a sample readout.
National MB-8 (2pp)

"The Systems Approach to Character Generators"
See listing under (Memory) ROMs. (National)

Controllers

9 **"TMS4500A Clock Synchronization"**
(TMS4500A)
Describes a simple clock synchronization circuit for use in asynchronous systems using the TMS4500A.
Texas Instruments DRC-2

10 **"TMS4500A Dynamic RAM Controller Users Manual"**
(TMS4500A)
Describes the functional operation of the TMS4500A and how it can be used in a microprocessor system.
Texas Instruments SCG690

11 **"The TMS4500A in an Asynchronous Bus System"**
(TMS4500A)
Details the logic required to implement a TMS4500A within an asynchronous bus system.
Texas Instruments DRC-1

EAROMs

12 **"A Voltage Switching Circuit for the ER2810"**
(ER2810)
The ER2810 electrically erasable read only memory requires switching of voltages on various pins to control the mode of operation. This note describes a simple, low-cost circuit for providing this control.
General Instrument Bulletin 1219 (1pp)

13 **"Data Retention Testing of ER3400"**
(ER3400)
Describes nondestructive analog-test procedure for determining EAROM data-retention capability.
General Instrument Bulletin 1210 (1pp)

14 **"EAROMs Replace Mechanical Switches"**
(ER1400)
Reports how CRT terminal makers use EAROMs to replace DIP switches to lower costs, reduce parts count, improve reliability and obtain field programmability of hardware options.
General Instrument Bulletin 1209 (3pp)

15 **"EAROM—The Electrically Word Alterable Memory for Permanent Storage"**
Presents a concise description of MNOS technology, EAROM characteristics and some applications.
General Instrument Bulletin 1215 (2pp)

16 **"Electronic Digital Lock"**
(ER2050)
Schematic and description of an 8-digit electronic lock that has 4 different "open" codes and a programming mode that allows any of the codes to be changed.
General Instrument Bulletin 1206 (3pp)

17 **"Generating EAROM Programming Voltages from a 5-Volt Supply"**
Most EAROMs and EEPROMs require relatively high voltages for erase and write operations. This note describes a low-cost DC to DC converter circuit capable of generating this voltage from a +5 volt power supply.
General Instrument Bulletin 1220 (1pp)

MEMORY

EAROMs (cont)

1 **"Interfacing the ER3400 to an Eight Bit Microcomputer"**
(ER3400)
Describes how to interface and control two ER3400 EAROMs with a PIC 1650 microcomputer. The ER3400 is organized as 1K x 4 bits. To obtain an 8-bit data word with a minimum of I/O lines and no additional hardware, two 1K x 4 bit EAROMs are connected in parallel and accessed simultaneously. In addition to creating an 8-bit data word, this effectively cuts erase and write times in half.
General Instrument Bulletin 1218 (3pp)

2 **"Measuring Data Retention of the ER0082"**
(ER0082)
The length of time that data may be retained in a non-volatile memory is a crucial parameter to the system designer. Many EAROM devices incorporate circuitry that enables this parameter to be measured. The method for doing this is described in this note.
General Instrument Bulletin 1222 (1pp)

3 **"Microprocessor Interfaces to the ER1400 EAROM"**
(ER1400)
Shows how to interface a serial I/O EAROM with four popular microprocessors using a variety of techniques.
General Instrument Bulletin 1207B (5pp)

4 **"N Channel EEPROMs Offer Increased Speed and Density"**
Discusses the evolution of electrically alterable non-volatile memory technology from p-channel to n-channel devices, and its impact for the system designer.
General Instrument Bulletin 1216 (4pp)

5 **"NC7033 Interfacing with Microprocessors"**
(NC7033)
Gives theory of operation for MNOS memory transistors and discusses typical applications. Emphasizes direct interfacing techniques for the 8085 and 8080 microprocessors. Tables provide main program routines, subroutines and key sequences.
Nitron AN-101

6 **"System Applications Using the 5213 16K EEPROM"**
(5213)
Discusses 5213 device operation, system design considerations, and examples of system implementations.
SEEQ AN-1 (14pp)

7 **"The ER3400: An Easy to Use 4K EAROM"**
(ER3400)
Describes use of the ER3400 p-channel EAROM in both microprocessor-based and random-logic-based systems requiring either in-system or out-of-system programming.
General Instrument Bulletin 1217 (3pp)

8 **"The Role of Non-Volatile Memories in Consumer Electronics"**
Briefly describes MNOS technology, updating EAROMs, and use of EAROMs to store data, to keep track of system status, and store programs for microcontrollers.
General Instrument Bulletin 1202 (3pp)

EEPROMs

9 **"High-Density EEPROM Design Considerations"**
(52832/64)
Outlines hardware and software design considerations in applying high-density EEPROMs. Details hardware design techniques for implementing a 28-pin socket that accepts EEPROMs from multiple vendors. Includes hardware and software considerations for interfacing the NCR 52832 to various microprocessors.
NCR Corp. MD-204 (7pp)

10 **"Low-Density Byte-Wide EEPROM Applications"**
(NCR53001, NCR53002, NCR53004)
Describes the functionality of byte-wide, fast-write, 5V-only EEPROMs and outlines possible applications and system integration techniques.
NCR Corp. MD-207 (4pp)

11 **"NOVRAM Family, Easier Than Ever to Use"**
Explains the basics of NOVRAMs, static RAMs overlaid with EPROMs, and discusses their use in a 6502-based system.
Xicor AN-101 (6pp)

12 **"Page-Alterable EEPROMs"**
(NCR52832, NCR52864)
Outlines the key advantages and applications of page-alterable, 5V-only, high-density EEPROMs compared to byte-alterable EEPROMs of equal density.
NCR Corp. MD-202 (6pp)

13 **"Serial EEPROMs"**
(NCR59308)
Outlines hardware and software considerations in the design of low-density serial EEPROMs when used in conjunction with single-chip microcomputers.
NCR Corp. MD-206 (5pp)

14 **"Storing Data in NOVRAM Memories During Power Failure"**
Briefly introducing Novram RAM/EEPROMs, this note gives details for ac and dc power failure protect circuits.
Xicor AN-102 (5pp)

15 **"The World's Easiest to Use EEPROMs are Here"**
(X2816A, X2804A)
Gives full details on the operation of the X2816A 2048x8 and X2804A 512x8 EEPROMs. Topics include compatibility of the X2816A with standard 2Kx8 RAM sockets and microprocessor interfacing.
Xicor AN-104 (6pp)

16 **"Xicor Replaces DIP Switches and Trimmers with NOVRAM Memories"**
Explains how NOVRAM RAM/EEPROMs can replace DIP switches and trimming potentiometers in many applications such as tuneable crystal oscillators, self-calibrating interchangeable probe thermometers, software programmable voltage references, and automatic scale calibrators.
Xicor AN-103 (7pp)

© IC MASTER 1984

MEMORY

EEPROMs (cont)

1 **"Microprocessor Interfacing with the 52B13 Latched 16K EROM"**
(52B13)
Discusses the interfacing of the 52B13 latched electrically erasable read-only memory to a microprocessor bus.
SEEQ (9pp)

General

2 **"10155 Content Addressable Memory (CAM)"**
Because of the associative architecture of the CAM, it is ideally suited for data "search" operations. The CAM has been found useful in applications such as file operations, list searching, traffic control, artificial intelligence, language translation, matrix manipulations, and cache memory control.
Signetics AN-004 (8pp)

3 **"Applying Modern Clock Drivers to MOS Memories"**
(DS0025, DS0026)
Covers use of 0025/26 drivers in MOS memory systems. Information includes selection of packages and heat sinks, power dissipation, rise and fall time, power supply decoupling, system clock line ringing and crosstalk, input coupling techniques, and sample calculations.
National Special Functions Databook AN-76 (12pp)

4 **"Error Detection and Correction Using SN54/74LS630 or SN54/74LS631"**
(SN54LS630, SN54LS631, SN74LS630, SN74LS631)
Discusses the need for improved error detection systems and the use of the SN54/74LS630/1 for reducing downtime in large memory boards.
Texas Instruments CA-201 (18pp)

5 **"Memory Applications Handbook"**
Contains assorted applications material on memory products manufactured by National Semiconductor. Individual application notes described and listed elsewhere.
National $11.00 (206pp)

6 **"Memory Designers Guide"**
(MK4564, MK4116, MK4027, MK4801A, MK4802)
Includes general information, and a number of application notes on dynamic and static RAMs.
Mostek Memory Designers Guide (425pp) $10.00

7 **"Memory Margining for the SNOS Process"**
Outlines procedures for measuring retention and endurance parameters on the company's nonvolatile RAMs and EEPROMs. Discusses techniques for incoming inspection verification of device conformance to published specifications.
NCR Corp. MD-205 (5pp)

8 **"System Considerations for Using Memories in Leadless Chip Carriers"**
Discusses different types of leadless chip carriers, soldering techniques, substrate choice, chip carrier replacement, and standardization.
Mostek 1982/83 Memory Designers Guide VI-3 (9pp)

General

9 **"Using Slower Memories with the VIS Display System"**
(CDP1869, CDP1870)
The scheme described nearly doubles memory access time of the system and permits use of memories approximately half as fast as those normally required with the VIS system.
RCA ICAN-6889 (4pp)

Microprogramming

10 **"ER2055 Benchtop Programmer"**
(ER2055)
Enables the user to become familiar with the operation of the ER2055 prior to designing it into a prototype circuit for a manual benchtop programmer.
General Instrument Bulletin 1221 (4pp)

"How to Design with the 8X02 Control Store Sequencer"
See listing under (Microprocessor) Systems (Signetics)

"Signetics Micro Assembler Reference Manual"
See listing under (Microprocessor) Programming (Signetics)

"Tri-State Logic in High Speed Memories of Microprogrammed Computers"
See listing under (Digital) TTL, General (National)

PROMs

11 **"32K EPROM Decision TMS2532 or Intel 2732"**
(TMS2532, 2732)
Compares two devices as to operation, microprocessor compatibility, plus timing and electrical parameters.
Texas Instruments Application Report MM9010 (12pp)

12 **"A CMOS 64K EPROM Using N-Well Technology"**
(MBM27C64)
Describes the design of a new generation of EPROMs using double-polysilicon, p-sub n-well CMOS technology.
Fujitsu AR-002 (4pp)

13 **"A Guide to Implementing Logic Functions Using PROMs"**
Illustrates techniques for using PROMs to efficiently emulate logic functions. Block diagrams provided.
National Memory Applications Handbook (4pp)

14 **"A PROM Programmer for the SC/MP LCDs"**
(MM4204, MM5204)
Provides a method for the user of the SC/MP LCDs to program MM4204 PROMs. Using wire-wrap techniques the user can construct a programmer that plugs into the SC/MP LCDs backplane and programs a 512 x 8 PROM in 10 seconds.
National Memory Applications Handbook AN-189 (23pp)

"Intel Memory Design Handbook"
See listing under (Memory) RAMs (Intel)

15 **"Interfacing the HM6641 with the NSC800"**
(HM6641)
The HM6641 is a CMOS PROM utilizing the polysilicon fuse technology. This paper discusses interfacing the 6641 with the 8 bit microprocessor, the NSC800.
Harris Semiconductor AN-103

MEMORY

PROMs (cont)

1 **"PROM Power Switching Alternatives"**
Describes circuits for external power switching of Tri-State bipolar PROMs to reduce average power requirements. Circuits directly interface active data bus.
National Semiconductor AN229 (6pp)

2 **"PROM Power-Down Circuits"**
(DM74S287)
Describes several ways to power-down bipolar, three-state PROMs.
National AN-171 (4pp)

3 **"Programming 2732 PROMs with the CDP18S480 PROM Programmer"**
(CDP18S480)
Describes procedure for programming 2732 PROMs with the CDP18S480 PROM programmer.
RCA ICAN-6847 (4pp)

4 **"Understanding and Using the CDP18U42 EPROM"**
(CDP18U42)
Cover design and programming characteristics of a 256 x 8-bit nonvolatile, UV EPROM; includes discussions on programmer circuit options and device applications.
RCA ICAN-6925 (8pp)

RAMs

5 **"The Nonvolatile RAM for Microprocessor Applications"**
(M193, M120)
Compares cell structure and operation of EPROMs, EAROMs, and NVRAMs. Emphasizes NVRAM applications.
SGS-ATES DN317 (15pp)

6 **"1K CMOS RAMs"**
(MM54C920, MM54C921, MM74C920, MM74C921, MM54C929, MM74C929, MM54C930, MM74C930)
Presents considerations for designing with CMOS RAMs. Considers synch vs asynch memory, memory structure and timing, and characteristics of devices.
National Memory Applications Handbook (13pp)

7 **"256-Cycle Refresh Conversion"**
(TMS4164)
Presents illustrations that show how to convert a system to a design with maximum flexibility.
Texas Instruments

8 **"64K Dynamic RAM Architecture"**
(TMS4164)
Includes discussion of performance, reliability and cost.
Texas Instruments DR-1

9 **"64K Dynamic RAM Refresh Analysis System Design Considerations"**
(TMS4164)
Presents refresh information and discusses compatibility with other DRAMs.
Texas Instruments DR-2

RAMs (cont)

10 **"64k Dynamic RAM Memory Board with Transparent Refresh"**
(MCM4116, MC3242, MC3480)
Describes circuits for implementing hardware-refreshed 64k dynamic memory board for use with 6800 or 6809-based systems.
Motorola Semiconductor AN-835 (7pp)

11 **"A CMOS Keyboard Data Entry System for Bus Oriented Memory Systems"**
(MC14419)
Describes a keypad to binary data entry system for placing data in RAM memories. It allows data to be entered through keystrokes encoding 4-bits at a time.
Motorola Application Note AN-759 (4pp)

"A High Speed FIFO Memory Using the MECL MC10143 Register File"
See listing under (Digital) High Speed Logic (Motorola)

12 **"A Memory Design for an 8080A-Based Microprocessor System"**
(INS8080A, MM5290)
Describes a memory design for a system with up to 64 bytes of R/W memory in 16 kbyte increments. Provision is made for further address decoding (up to 1 megabyte). Includes schematics, timing diagrams.
National Memory Applications Handbook (8pp)

13 **"A Method of Implementing Stacks with Existing Minicomputer Memory"**
Gives detailed description of a controller for a stack of programmable size up to 256 words for a 16-bit minicomputer with less than 16K of memory. Tells how stack size can be increased to 4096 words by adding ten ICs.
National AN-60 (4pp)

14 **"A Testing Philosophy for 16K Dynamic Memories"**
(MK4116)
Discusses test procedures that relate to the quality and reliability of memory chips, including characterization tests, reliability tests, and final test. Includes a comparison of available 16K dynamic RAMs.
Mostek 1982/83 Memory Designers Guide III-103 (12pp)

15 **"Addressing Considerations When Testing the MB8264 and MB8265 64K Dynamic RAMs"**
(MB8264, MC8265)
Testing a random acess memory requires a detailed description of the internal topology and address decoding of the device in order to properly run complex disturb patterns and to optimize testing procedures. This note provides this information for the MB8264 and MB8265 64K dynamic RAMs.
Fujitsu TB-001 (4pp)

16 **"Addressing Considerations When Testing the MK4116"**
(MK4116)
Describes the internal topology of the MK4116 16K dynamic RAM, and provides information for checking for worst-case patterns or for optimizing test sequences.
Mostek 1982/83 Memory Designers Guide III-83 (7pp)

MEMORY

RAMs (cont)

1 **"An In-Depth Look at the MK4027"**
(MK4027)
Gives complete information on the MK4027 4K RAM, including process steps, internal operation, memory cycles and refresh.
Mostek 1982/873 Memory Designers Guide III-121 (13pp)

2 **"Applications for HM6505"**
(HM6505)
A technical brief of the uses and operation of this CMOS RAM. Microprocessor and battery backup applications are discussed.
Harris Semiconductor AN-102

3 **"Applications of the Intel 2104A 4K RAM"**
(2104A)
Discusses operation of the device including power distribution and decoupling.
Intel Application Note AP-23 (13pp)

4 **"Battery Back Up Considerations Using NEC CMOS RAMs"**
Discusses basic battery types available and their application to battery back up with NEC SMOS memory.
NEC AN11 (5pp)

5 **"CEMOS I High-Performance 16K (4K x 4 Bit) Static RAMs"**
(IDT71681, IDT6168)
Offers application examples of the IDT71681/6168 static RAMs as microprogram, mapped, and cache memories, as local stacks for high-performance ALUs, and in video display controllers and digital filters.
Integrated Device Technology (12pp)

6 **"CMOS MK3805 Provides Real Time Clock/Calendar to a Z80 Bus"**
(MK3805)
Describes the Mk3805 and its operation, including interface requirements and alternatives. A sample program is given.
Mostek 1982/83 Z80 Designers Guide V-105 (30pp)

7 **"CMOS Memory Battery Back-up"**
Describes the precautions that need to be observed in battery back-up circuits for CMOS memory systems.
Solid State Scientific AN-206 (6pp)

8 **"Charge Pump Driver for 7001 RAMs"**
(SN54508)
Defines a method for driving the charge storage pump input of a 7001 RAM. Provides a description of the basic storage pump RAM cell and the charge pump circuit diagram. Gives performance curves.
Texas Instruments Application Report CA-178 (6pp)

9 **"Designing Memory Systems for Microprocessors Using the Intel 2164A and 2118 Dynamic RAMs"**
(2164A, 2118, 8203)
Describes microprocessor memory system design using Intel dynamic RAMs and the 8203 dynamic RAM controller. Includes logic schematics, timing diagrams and system design considerations.
Intel AP133 (38pp)

RAMs (cont)

10 **"Designing Memory Systems with the Intel 2186 and 2187 iRAMS"**
(2186, 2187)
Discusses a new type of RAM, called the iRAM (integrated RAM), which combines the best features of the SRAM and DRAM, and eliminates the need for designing refresh control circuits.
Intel AP-132 (38pp)

11 **"Designing Minimum/Nonvolatile Memory Systems with CMOS Static RAMs"**
(CDP1800)
Details system considerations and circuit requirements for CDP-1800 series RAM operation and data retention in CDP1802-based systems. Discusses interfacing complexity vs memory size, power distribution, power-up/power-down control and battery selection.
RCA ICAN-6943 (25pp)

12 **"Designing with 16K and 64K Dynamic RAMs"**
(NMC4164, NMC5295)
Discusses design procedures using multiplexed-address, dynamic RAMs. Describes basic functions and RAM controller operation. Provides extensive electrical and timing diagrams.
National AN228 (16pp)

13 **"Designing with AMI's High Speed S2114H 1024x4 bit Static RAM"**
(S2114H)
Describes device and its use. Supplies block diagram, operating modes and timing diagrams.
American Microsystems (3pp)

14 **"Dynamic MOS RAMs"**
Discusses performance and design considerations of dynamic MOS RAMs, including multiplex timing considerations, page mode operation, and sense amplifier considerations.
Mostek 1982/83 Memory Designers Guide III-59 (6pp)

15 **"Dynamic RAM Board Design Made Easy"**
Discusses RAM chip characteristics, power supply and control signal distribution on PC boards, and control logic implementation. With schematics, PC layout.
National Memory Applications Handbook (9pp)

16 **"Guidelines for Designing Battery Backup Circuits for CMOS RAMs"**
Describes the various methods and interfaces for simplifying battery backed-up CMOS memory arrays. Includes a discussion of proper battery choice.
Harris Semiconductor AR-11 (7pp)

17 **"High Speed TTL Interfacing for 7001 Static RAMs"**
(SN75261, SN75365)
Illustrates interface techniques for driving the 7001 RAM chip-select input, and sensing the memory output.
Texas Instruments Application Report CA-179 (8pp)

18 **"Improved Performance with the AM9124"**
(AM9124)
Discusses device advantages over the 2114, including power and dc parameters, and memory system design incorporating the device.
Advanced Micro Devices (6pp)

MEMORY

RAMs (cont)

1 **"Intel 2164A 64K Dynamic RAM Device Description"**
Detailed description and operating analysis of the 2164A dynamic RAM.
Intel AP-131 (18pp)

2 **"Intel 2164A Dynamic RAM Device Description"**
(2164A)
Describes the design and operation of a new type of dynamic RAM featuring redundancy and single 5V operation.
Intel AP-131 (18pp)

3 **"Intel Memory Design Handbook"**
(1103, 2107A, 2107B, 2416, 3207A, 3222, 3245, 5101, 5235, 5244)
Combines various RAM, ROM, PROM and CCD application notes plus information on support circuits.
Intel $5.00 (265pp)

4 **"Interfacing Static R/W Memories to the 8080A"**
(INS8080A)
Considers addressing techniques and memory interfacing for the 8080A family.
National Memory Applications Handbook (4pp)

5 **"Interfacing the 6800 Microprocessor to National MM74C910 Memory"**
(MC6800, MM74C910)
Outlines an area navigation system for aircraft using the devices.
National Memory Applications Handbook (2pp)

6 **"Interfacing to the Z6132 Intelligent Memory"**
(Z6132)
Discusses the features and operating modes of the Z6132 4K dynamic RAM, with interface example given for each of the company's microprocessors. Design requirements for interchanging the Z6132 with 2716/2732-type EPROMs are also given.
Zilog Microprocessor Applications Reference Book 4-3 (16pp)

7 **"MK4801A/MK4802 for High Speed Applications"**
(MK4801A, MK4802)
Details the characteristics, operations and benefits of two NMOS static RAMs.
Mostek 1982/83 Memory Designers Guide IV-17 (13pp)

8 **"MOS Scratch Pad/Content Addressable Memory System"**
Describes a 64-bit Scratch Pad/Content Addressable Memory using MOS devices. Includes circuit diagrams and discusses circuit operations.
National MB-11 (2pp)

9 **"Memory Systems Characteristics and Applications for the CD4061A"**
(CD4061A)
Describes basic device operation, application in memory systems, and testing including construction of an all CMOS memory tester.
RCA ICAN-6445

RAMs (cont)

10 **"NMOS RAM Offers Non-Volatility with DATASAVE"**
Explains how the Bytewide concept of RAM, ROM and EPROM interchange makes memory design more flexible, how it works, and how it can be integrated into a system.
Mostek 1982/83 Memory Designers Guide IV-7 (9pp)

11 **"Nonvolatile RAM Applications"**
(NCR52001, NCR52002, NCR52004, NCR52210, NCR52211, NCR52212)
Defines nonvolatile RAMs and gives a detailed technical description of the operation of 5V-only byte-wide and nibble-wide NVRAMs.
NCR Corp. MD-203 (5pp)

12 **"Optimized Testing of 16K RAMs"**
(MK4116)
Discusses the critical issues in 16K RAM testing, including test temperature, refresh testing, sense amplifier margin, and decoder and I/O testing.
Mostek 1982/83 Memory Designers Guide III-99 (4pp)

13 **"Power Reduction Techniques for CMOS RAMs"**
(SCM5101)
Discusses RAM structure, chip deselection, input voltage levels, dynamic power dissipation and low voltage data retention as they relate to reducing power consumption.
Solid State Scientific AN-200 (11pp)

14 **"Printed Circuit Board Layouts for the Compatible Dynamic RAM Family"**
(MK4116, MK4332, MK4516, MK4528, MK4564)
Discusses techniques for memory board designs using these dynamic RAMs.
Mostek 1982/83 Memory Designers Guide III-17 (8pp)

15 **"Software Refresh Memory Board for an MC6809 System"**
(MCM4116, MCM4027, MCM6664)
Describes hardware and software for implementing a software-refreshed dynamic memory board for use with 6809-based systems.
Motorola Semiconductor AN-833 (5pp)

16 **"Software Refreshed Memory Card for the MC68000"**
(MC68000, MCM4116, MCM6664)
Describes hardware and software for implementing a software-refreshed, dynamic memory card using 16k or 64k RAMs for use in an 8-MHz MC68000 system.
Motorola Semiconductor AN-816 (6pp)

17 **"Static RAM Applications"**
(INS8900, MM5257)
Discusses memory support for a μP and power down for RAMs.
National Memory Applications Handbook (2pp)

18 **"TMS4116 VS TMS4164 Data Sheet Differences"**
(TMS4116, TMS4164)

19 **"TMS4164 Internal Topology"**
(TMS4164)
Discusses TMS4164 pinout, array organization, array bit map, and upper and lower array cell topology.
Texas Instruments DR-9

20 **"TMS4164 Printed Circuit Board Layout"**
(TMS4164)
Illustrates universal and p-c board layouts for the TMS4164.
Texas Instruments DR-6

MEMORY

RAMs (cont)

1 **"TMS4416 16Kx4 DRAM Device Structure"**
(TMS4416)
Describes pin configuration and 8x6 vs 7x7 addressing compatibility.
Texas Instruments DR-11

2 **"TMS4416 Internal Topology"**
(TMS4416, TMS4164)
Illustrates TMS4416 address bit significance, pinout, array organization, array bit map, and upper and lower array cell topology.
Texas Instruments DR-10

3 **"Test Implications of Higher Speed 16K RAMs"**
Deals with the problems of testing fast 16K RAMs.
Mostek 1982/83 Memory Designers Guide III-115 (6pp)

4 **"The 5-Volt, 64K Dynamic RAM is Here, So is The 32K, So is The 16K!!!"**
(MCM4516/17, MCM6664/65, MCM6634)
Provides diagrams and instructions for optimizing memory-board layout using three types of RAMs in an expandable system. Emphasizes planning of addressing at the card edge, and physical and logical row selection on the card.
Motorola AN-805 (5pp)

5 **"The Design of an N-Channel 16K x 16-Bit Memory System for the PDP-11"**
(MCM6605, MC3450, MC3452, MC3459, MC3460)
Briefly describes operation of the MCM6605 NMOS RAM, the details, the design of a PDP-11 add-on mainframe memory using this device. The interface ICs and system performance are also discussed.
Motorola AN-740 (15pp)

6 **"Transparent Refresh Using SN74LS600AN and SN74LS601AN"**
(SN74LS600A, SN74LS601A)
Describes how dynamic RAM refresh can be accomplished without interrupting CPU cycle time.
Texas Instruments AR-SDLA001 (4pp)

7 **"Understanding the FIFO"**
(3351)
Covers 3351 FIFO operation, cascading, plus use in data rate buffering, parallel operation, and burst operation.
Fairchild APP 332 (8pp)

8 **"Use of CMOS RAM CDP1824 with RCA Microprocessor Evaluation Kit 18S020"**
(CDP1824)
Describes the CDP1824 and its application in the CDP18S020 Evaluation Kit, and presents examples of how the CDP1824 can be combined with the CDP1831 ROM to form efficient ROM-RAM systems.
RCA ICAN-6537 (4pp)

9 **"Use of CMOS-SOS RAM CDP1822 with RCA Microprocessor Evaluation Kit CDP18S020"**
(CDP1822)
Describes the CDP1822, its operation, and its application in the CDP18S020 Evaluation Kit.
RCA ICAN-6539 (4pp)

10 **"Using 64 Kbit Dynamic RAMs with EF9365, EF9366, EF9367 Graphic Display Processor"**
(EF9365, EF9366, EF9367)
Explains the use of 64K x 1 and 16K x 4 dynamic RAM memory chips in designing a graphic display system built around the EF9365/6/7 processor circuits.
Thomson CSF Components NA-035A (22pp)

RAMs (cont)

11 **"Using Dynamic RAMs"**
(MK4027, MK4116)
This note discusses the considerations in designing a memory system using the MK4027 or MK4116 via a demonstration memory board designed for the Digital Equipment Corp. LSI-11 microcomputer.
Mostek 1982/83 Memory Designers Guide III-65 (15pp)

12 **"Using Synchronous Static CMOS RAMs"**
A detailed study of the design techniques required for high performance, low power, CMOS RAM arrays. An example array design is presented, and interfacing to common microprocessors is discussed.
Harris Semiconductor AN-101

13 **"Using Tri State® Logic for Rubber Band Memories"**
Describes the construction and use of scratch/pad memories to store data at a rapid rate and then release it as required. They serve as buffers between systems operating at different clock rates.
National AN-68 (4pp)

14 **"Which Way for 16K?"**
Considers various aspects of 16K RAMs including 64 and 128 cycle refresh and the advantages versus disadvantages of latching.
Intel Application Note AP-22 (7pp)

15 **"Z80 Interfacing Techniques for Dynamic RAM"**
(MK4027, MK4116)
Provides specific examples of methods for interfacing 16-pin dynamic memories to the Z80.
Mostek 1982/83 Memory Designers Guide III-43 (16pp)

16 **"Z8000 Memory Interfacing Techniques"**
(MK4564)
Gives a functional description of the MK4564, timing charts for refresh and Z8001 timing, and interface schematic.
Mostek 1982/83 Memory Designers Guide III-37 (5pp)

ROMs

17 **"Custom ROM Programming"**
Gives forms for submitting truth tables for various National read only memories.
National AN-100 (8pp)

18 **"Designing With Signetics MOS ROM Family"**
Lists the advantages of designing with a generic printout family of EPROM/ROMs. Describes data and specifications of major lines of MOS ROM.
Signetics (50pp)

19 **"Fast Multipliers Using TTL Read Only Memories"**
(SN74182, SN74H183, SN74283, SN74284, SN74285)
Reviews fundamental algorithm of binary multiplication. Shows use of ROMs for multiplication, two's complement multiplication, and truncated multiplications.
Texas Instruments Application Report CA-172 (11pp)

"Intel Memory Design Handbook"
See listing under (Memory) RAMs (Intel)

"MOS Goes Bipolar"
See listing under (Memory) Shift Registers (National)

MEMORY

ROMs (cont)

1 **"Memory System Upgrade, 16K EPROM to 32K EPROM, and 32K EPROM to 32K ROM"**
(TMS2516, TMS2532, TMS4732)
Describes and illustrates system upgrades involving read mode only and those involving program modes.
Texas Instruments MM9403

2 **"Monolithic Diode Matrices"**
Describes programming and use of diode matrices. Applications: teletypewriter coding matrix, decimal decode for displays, nines complement-BCD, shift register matrices, and ROMs.
Harris Semiconductor AN-206 (16pp)

3 **"ROM Application Note"**
(EA8308A, EA8316E)
General discussion of ROMs and characteristics of each device.
Electronic Arrays (11pp)

4 **"Saving ROMs in High-Resolution Dot-Matrix Displays and Printers"**
(DM8596, MM8597)
Describes two-stage, column-generation approach called "intermediate coding" that saves more than 25% of ROM capacity when several ROMs are needed to store a font.
National AN-85 (8pp)

5 **"The Application of ROMs"**
(MM5203)
Describes applications of read only memories in table look up, code conversion and generation, character generation, random logic generation, and microprogramming.
National AN-61 (12pp)

6 **"Trig Function Generators"**
Instead of simply cascading ROM to increase resolution and accuracy of the look-up tables, this note describes interpolation techniques to increase trig function accuracy with less memory.
National MB-10 (12pp)

7 **"Use of CMOS ROMs CDP1831 and CDP1832 with the RCA Microprocessor Evaluation Kit CDP18S020"**
(CDP1831, CDP1832)
Describes the operation and design of CDP1831- and CDP1832-based read-only memory systems in the CDP18S020.
RCA ICAN-6536 (4pp)

8 **"Use of CMOS ROMs CDP1833 and CDP1834 with the RCA Microprocessor Evaluation Kit CDP18S020 and the EK/Assembler-Editor Design Kit CDP18S024"**
(CDP1833, CDP1834)
Describes the application of the CDP1833 and CDP1834 in the CDP18S020 Evaluation Kit and the CDP18S024 EK/Assembler-Editor Kit.
RCA ICAN-6635 (4pp)

Shift Registers

"9338 8-Bit Multiple Port Register"
See listing under (Digital) TTL-General (Fairchild)

9 **"A Random Pattern Generator for Testing Digital Delay Elements"**
Describes the use of a linear feedback shift register for digital testing.
Advanced Micro Devices (3pp)

"COS/MOS MSI Counter and Register Design and Applications"
See listing under (Digital) CMOS (RCA)

"HiNIL 375 Universal Shift Register"
See listing under (Digital) HNIL/HTL (Teledyne Semiconductor)

"The Logical Design of Shift Counters"
See listing under (Digital) Counters. (Motorola)

"Using Shift Registers as Pulse Delay Networks"
See listing under (Digital) High Speed Logic (Motorola) Microprocessors.

CUSTOM/SEMICUSTOM

Bipolar

10 **"Low Voltage Bipolar Circuits"**
(Monochip)
Presents device parameters, circuit configurations, and performances of some representative circuits that will operate with a 1-volt supply using Monochip component arrays.
Interdesign APN-25 (16pp)

CMOS

11 **"Analog MOS on Semicustom Integrated Circuits"**
(Monochip)
Describes a CMOS semicustom array series that can be used to produce analog and digital circuits on a single chip.
Interdesign APN-23

12 **"Designing Low Frequency Filters on the CMOS Monochip"**
(Monochip)
Describes how to design monolithic low-frequency filters using switched capacitor techniques on a semicustom IC. Examples of low-pass, high pass, and band-pass designs are given.
Interdesign APN-28 (24pp)

© IC MASTER 1984

CUSTOM/SEMICUSTOM

Gate Arrays

1 **"Analog Capabilities on Metal Gate CMOS Arrays"**
Describes semicustom CMOS gate arrays for monolithic digital and low-power, high-performance linear design combinations.
Interdesign APN-32 (7pp)

2 **"Designing with an LSI Bipolar Configurable Gate Array"**
Describes the technology, topology and circuit operation of an LSI bipolar configurable gate array.
Raytheon Semiconductor AN28 (24pp)

3 **"High-Voltage, Semi-Custom Component Arrays"**
(ULN-2350C, ULN-2351C)
Describes semi-custom arrays incorporating features not normally found in other arrays: high-voltage thin-film resistors, NPN power transistors, and vertical and lateral PNP transistors.
Sprague TP81-3 (4pp)

4 **"Precision Analog Monochips Host Low-Power, High-Speed Digital"**
The "MO" Series Monochips are semicustom gate arrays that have been optimized for analog circuitry yet can achieve digital speeds on the order of 20 ns. This note illustrates the implementation of an inverter/buffer function.
Interdesign APN-30 (7pp)

Gate Arrays (cont)

5 **"The Design of ISO3/5 Output Drivers and Buffers"**
(ISO3, ISO5)
Describes the various output structures available in the ISO3/5 family of CMOS gate arrays, their AC and DC parameters, and their proper implementation.
Universal Semiconductor AN1 (4pp)

6 **"The Use of Bipolar Semiconductor Junctions in Linear Circuit Design"**
Addresses the fundamental properties of bipolar semiconductor junctions and shows how their basic voltage/current logarithmic relationship can be used in many types of circuits.
Interdesign, Inc. APN-33 (21pp)

TTL

7 **"LSI TTL Gate Arrays"**
Describes some simple SSI and MSI circuits that can be converted to LSI-TTL gate arrays.
Interdesign APN-26 (8pp)

Last Page This Section. Next Page 350

INTERSIL

The following are brief descriptions of current Intersil Application notes.

A003 **UNDERSTANDING AND APPLYING THE ANALOG SWITCH**

Introduces analog switches and compares them to relays. Describes CMOS, hybrid (FET + driver), J-FET "virtual ground" and J-FET "positive signal" types. Application information included.

A004 **IH5009 LOW COST ANALOG SWITCH SERIES**

Compares the members of the IH5009 "virtual ground" analog switches and provides suggested applications.

A005 **THE 8007–A HIGH PERFORMANCE FET INPUT OP AMP**

Compares the 8007 with the 741, which is pin compatible and suggests applications such as log-antilog amplifier, sample and hold circuit, photometer, peak detector, etc.

A007 **USING THE 8048/8049 MONOLITHIC LOG-ANTILOG AMPLIFIER**

Describes in detail the operation of the 8048 logarithmetic amplifier, and its counterpart, the 8049 antilog amp.

A011 **A PRECISION FOUR QUADRANT MULTIPLIER–THE 8013**

Describes, in detail, the operation of the 8013 analog multiplier. Included are multiplication, division, and square root applications.

A013 **EVERYTHING YOU ALWAYS WANTED TO KNOW ABOUT THE 8038**

This note includes 17 of the most asked questions regarding the use of the 8038.

A015 **DESIGN FOR A BATTERY OPERATED FREQUENCY COUNTER**

Describes a low cost battery operated frequency/period counter using the 7207A and 7208. Includes specifications, schematics, PC layout, etc.

A016 **SELECTING A/D CONVERTERS**

Describes the differences between integrating converters and successive approximation converters. Includes a checklist for decision making, and a note on multiplexed data systems.

A017 **THE INTEGRATING A/D CONVERTER**

Provides an explanation of integrating A/D converters, together with a detailed error analysis.

A018 **DO'S AND DONT'S OF APPLYING A/D CONVERTERS**

An analysis of proper design techniques using D/A converters.

A019 **4½ DIGIT PANEL METER DEMONSTRATION/INSTRUMENTATION BOARDS**

Describes two typical PC board layouts using the 8052A/7103A 4½ digit A/D pair. Includes schematics, parts layout, list of materials, etc. Also see A028.

A020 **A COOKBOOK APPROACH TO HIGH SPEED DATA ACQUISITION AND MICROPROCESSOR INTERFACING**

Uses the building block approach to design a complete 12 volt system. Explains the significance of each component and demonstrates methods for microprocessor interfacing, including the use of control signals.

A021 **POWER D/A CONVERTERS USING THE ICH 8510**

Detailed analysis of the 8510. Included are a section describing the linearity of the device and application notes for driving servo motors, linear and rotary actuators, etc. Also see A026.

A022 **A NEW J-FET STRUCTURE–THE VARAFET**

Describes in detail the operation of the varafet, a standard J-FET with the analog gate interfacing components monolithically built-in.

A023 **LOW COST DIGITAL PANEL METER DESIGNS**

Provides a detailed explanation of the 7106 and 7107 3½ digit panel meter IC's, and describes two of the evaluation kits available from Intersil.

A026 **DC SERVO MOTOR SYSTEMS USING THE ICH8510**

This companion note to A021 explains the design techniques utilized in using the ICH8510 family to drive closed loop servo motor systems.

A027 **POWER SUPPLY DESIGN USING THE ICL-8211 AND ICL8212**

Explains the operation of the ICL8211/12 and describes various power supply configurations. Included are positive and negative voltage regulators, constant current source, programmable current source, current limiting, voltage crowbarring, power supply window detector, etc.

© IC MASTER 1984

A028 **BUILDING AN AUTO RANGING DMM WITH THE ICL7103A/8052A CONVERTER PAIR**
This companion app note to A019 explains the use of the 8052A/7103A converter pair to build a ±4½ digit auto ranging digital multimeter. Included are schematics, circuit descriptions, tips and hints, etc.

A029 **POWER OP AMP HEAT SINK KIT**
Describes the heat sinks for the ICH8510 family. These heat sinks may be ordered from the factory.

A030 **THE ICL7104: A BINARY OUTPUT A/D CONVERTER FOR MICROPROCESSORS**
Describes in detail the operation of the 7104. Includes in digital interfacing, handshake mode, buffer gain, auto-zero and external zero. Appendix includes detailed discussion of auto-zero loop residual errors in dual slope A/D conversion.

A031 **COIL DRIVE ALARM DESIGN CONSIDERATIONS**
Explains the procedure used when using watch circuits to drive piezoelectric transducers.

A032 **UNDERSTANDING THE AUTO-ZERO AND COMMON MODE PERFORMANCE OF THE ICL7106/7107/7109 FAMILY**
Explains in detail the operation of the ICL7106/7/9 family of A/D Converters.

A046 **BUILDING A BATTERY OPERATED AUTO RANGING DVM WITH THE ICL7106**
Explains principles of auto ranging, problems and solutions. Includes clock circuits, power supply requirements, design hints, schematics, etc.

A047 **GAMES PEOPLE PLAY WITH A/D CONVERTERS**
Describes 25 different integrating A/D converter applications. Input circuits, conversion modifications, display and microprocessor interfaces are shown in detail.

A050 **USING THE IT500 FAMILY TO IMPROVE THE INPUT BIAS CURRENT OF BIFET OP AMPS**
A brief description of a preamplifier for BIFET OP AMPS.

A051 **PRINCIPLES AND APPLICATIONS OF THE ICL7660 CMOS VOLTAGE CONVERTER**
Describes internal operation of the ICL7660. Includes a wide range of possible applications.

A052 **TIPS FOR USING SINGLE CHIP 3½ DIGIT A/D CONVERTERS**
Answers frequently asked questions regarding the operation of 3½ digit single chip A/D converters. Included are sections on power supplies, displays, timing and component selection.

A053 **THE ICL7650 A NEW ERA IN GLITCH-FREE CHOPPER STABILIZER AMPLIFIERS**
A brief discussion of the internal operation of the ICL7650, followed by an extensive applications section including amplifiers, comparators, log-amps, pre-amps, etc.

A054 **DISPLAY DRIVER FAMILY COMBINES CONVENIENCE OF USE WITH MICROPROCESSOR INTERFACABILITY**
Compares and describes the various display drivers. Includes design examples for 7 segment, Alpha-numeric, and bargraph systems.

M011 **AVOIDING PROBLEMS IN CMOS MEMORY OPERATION**
Discusses input overvoltage and SCR latch-up and the multiple address access problem in CMOS RAMs.

© IC MASTER 1984

Field Programmable Logic

Application Report

TEXAS INSTRUMENTS

© IC MASTER 1984

PLA APPLICATIONS

Introduction
(General description and benefits)
Definitions and Symbology
- Symbology
- Field-Programmable Logic Array (FPLA)
- Field-Programmable Logic Sequencer (FPLS)
- Fixed-OR Arrays (FOA)

Designing with Field Programmable Logic Arrays
- Inputs
- Control Pins
- Outputs
- Feedback Paths
- Logic Block Equivalence
- Reference Information

Programming Field Programmable Logic
- Preparation and Programming
- Programmed Example
  - Manual Programming, Example
  - Computer-Aided Programming, Example

© IC MASTER 1984

INTRODUCTION

Texas Instruments Field-Programmable Logic is the result of combining established Advanced Low-Power Schottky technology with the familiar Titanium-Tungsten (TiW) fuse-link technology used in PROMs to produce a family of powerful new user-programmed devices. Not everyone is familiar as yet with the Field-Programmable Fixed-OR Array (FOA), Logic Sequencer (FPLS), and Logic Array (FPLA). The highlights below are presented to start the process of familiarization by describing some of the unique advantages available to the designer who can create custom logic on demand to meet special requirements.

- *Package count reduction* compared to standard catalog SSI and MSI logic.
- *Lower cost* due to reduction in substrate or PC area, connectors, overall system size, and assembly labor.
- *Improved reliability* through fewer interconnects (IC bond wires, solder connections, through-holes in PC boards, connector contacts) and simplified substrate circuitry.
- *Circuit flexibility* that will adapt to custom applications.
- *Shorter design cycle* as compared to special-order devices.

Field-Programmable Logic is intended to integrate functions normally implemented with standard gates, flip-flops, and MSI. It can be used to reduce miscellaneous logic package count, or as "glue" around high-density LSI circuitry (i.e., microprocessors and gate arrays). It is positioned as a "gap filler" between standard catalog logic devices and large-scale integration.

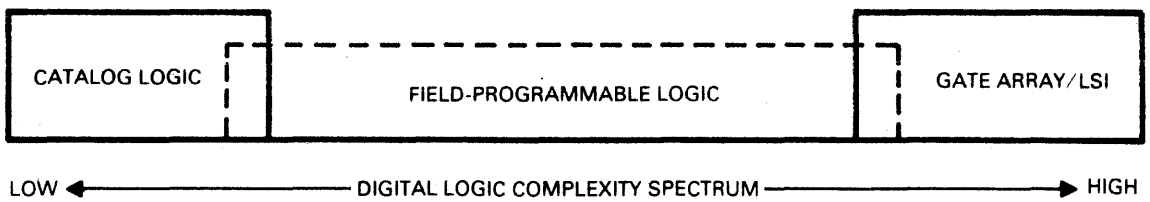

DEFINITIONS AND SYMBOLOGY

Just as logic symbols simplified schematics, the new terms and symbology presented here will simplify array logic diagrams for programmable devices. New terms will be highlighted by italics throughout the text.

TEXAS INSTRUMENTS
POST OFFICE BOX 225012 • DALLAS, TEXAS 75265

© IC MASTER 1984

SYMBOLOGY

All the products presented are variations of a basic two-array architecture. A typical Field-Programmable Logic device may have over 100 gates and in excess of 1000 fuses. Because of this, it is necessary to devise a shorthand symbology to simplify logic diagrams. The logic diagrams used in this data book will adhere to the symbology presented below.

First, view a conventional two-input AND gate. Inputs are designated as A and B. The output function of the AND gate is the product of the inputs (F = A·B).

FIGURE 1

Now redraw the same logic element using array symbology (Figure 2). Notice that the AND gate is represented as having a single input called a *product line*. The *input terms* are shown as lines perpendicular to the product line. The output (*product term*) is the product of the input terms.

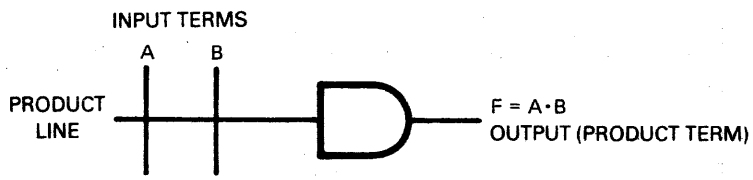

FIGURE 2

In the following figure we will extend the symbology to develop a simple programmable array element. First, notice that buffers have been added to the inputs. These buffers make available both true and complement states of any input to the product lines. Second, notice that another AND gate has been added. The intersection of the input terms and product lines form a 4 X 2 AND array.

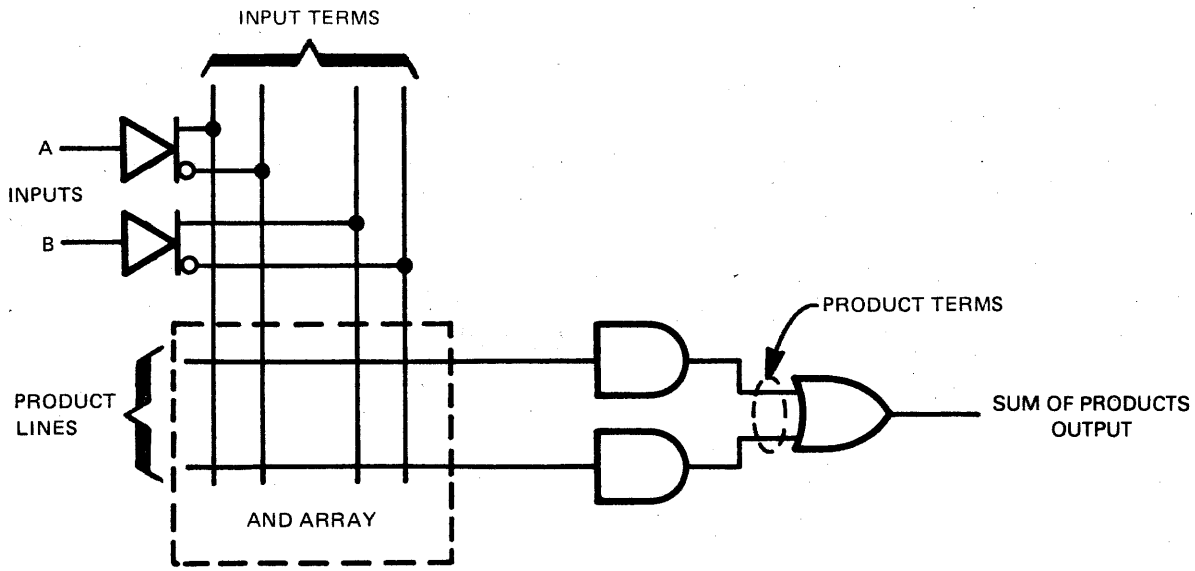

FIGURE 3

Third, the product terms of the AND gates are summed with an OR gate. The output function is now the sum of products of the input lines.

© IC MASTER 1984

To make the structure in Figure 3 useful, provisions must be made to program the AND array. Programming is done by means of fusible TiW links. A fuse is located between the input term and the actual input to the AND gate (see Figure 4). In our special array symbology, a fuse is visualized to exist at each intersection of the input terms and product lines.

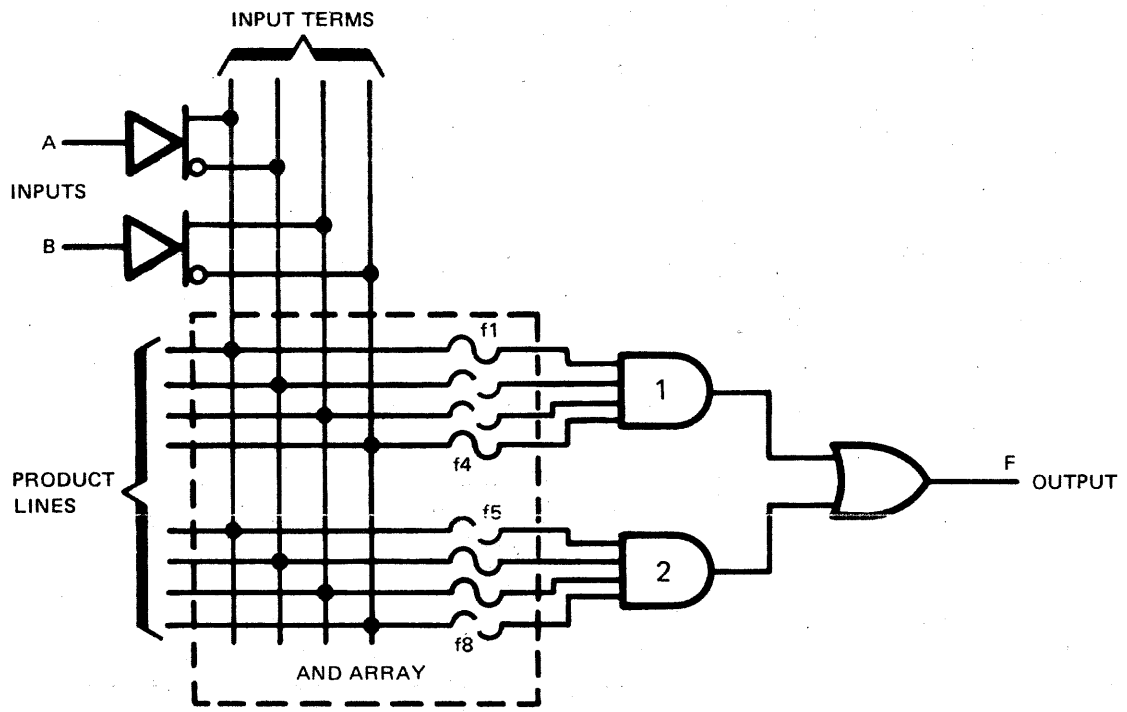

FIGURE 4

Now we can express the output function F in terms of the inputs. Notice that fuses f2, f3, f5, and f8 have been blown and A and $\overline{B}$ are still connected to AND gate #1 through fuses f1 and f4. Likewise, $\overline{A}$ and B are connected to AND gate #2 through fuses f6 and f7. The output can now be expressed as $F = A\overline{B} + \overline{A}B$.

A compact representation of the unprogrammed version of Figure 4 using the rules explained in Section 6 of the ALS/AS data book is shown in Figure 5.

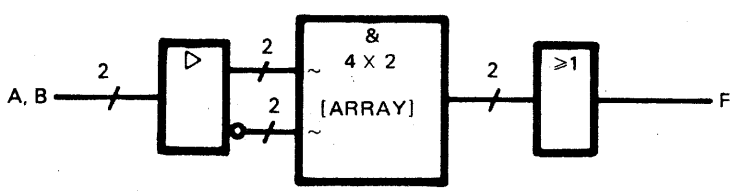

FIGURE 5

Figure 6 will further show how the function $F = A\overline{B} + \overline{A}B$ is represented in our array symbology and will present the convention used to show the fuse states in a programmed array. This convention simply places an X at the intersection of each input term and product line for which an intact fuse is required. Blown fuses will be represented by the absence of an X at the appropriate intersection.

TEXAS INSTRUMENTS
POST OFFICE BOX 225012 • DALLAS, TEXAS 75265

© IC MASTER 1984

Unused product lines, where all fuses are left intact, can be noted with an X in the AND symbol. This product term will always be inactive (i.e., have no affect on any sum term in which it appears). If all fuses are blown on a product line, the output containing this product term will be disabled (i.e., forced high). Exercise care in programming to avoid this condition.

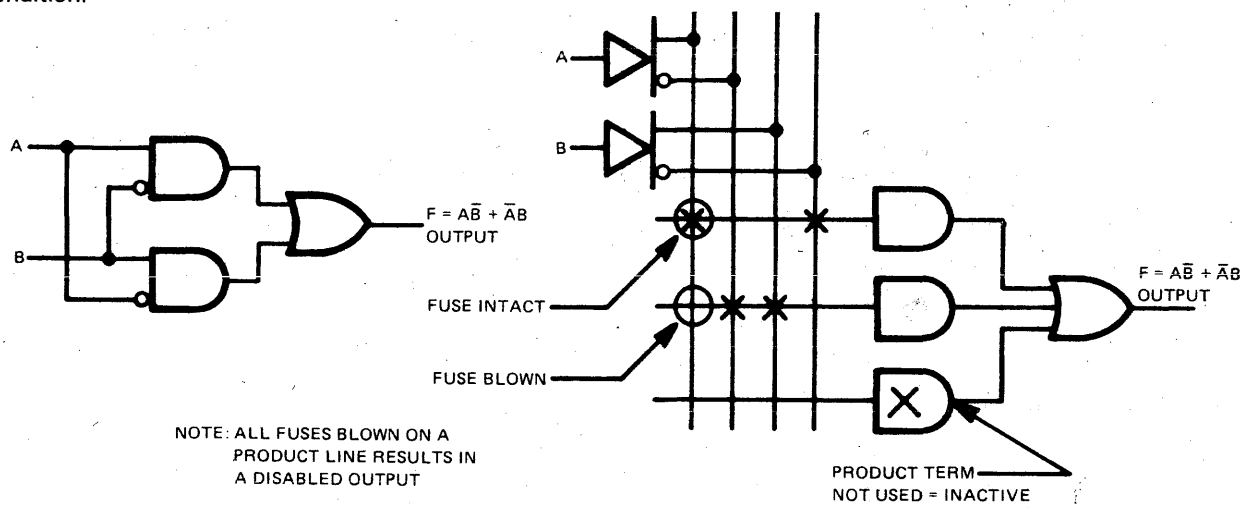

FIGURE 6

The symbology is further extended to include the two-array circuit structure, which is the basic Field-Programmable Logic architecture. Figure 7 is a two-array logic diagram. In earlier examples, the AND gates were summed in a single OR gate. In the two-array structure, the AND gate outputs enter a programmable OR array. The OR array allows any product term to be included in the sum term of any output or in all outputs.

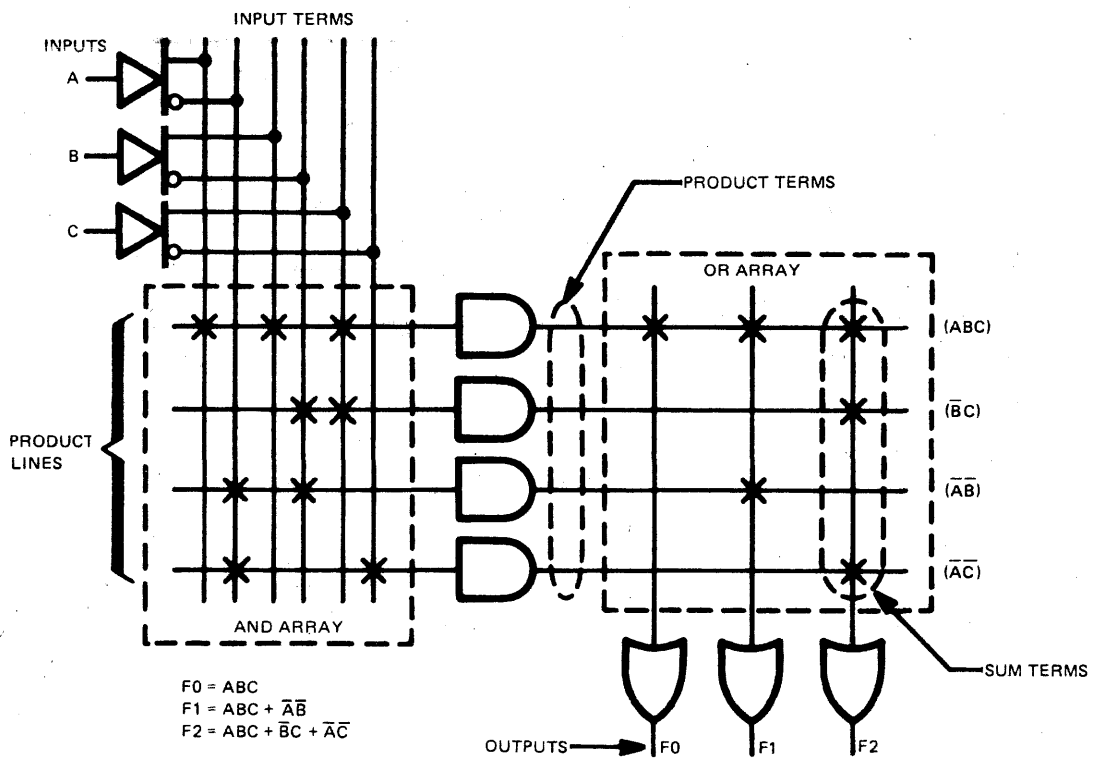

FIGURE 7

All of the Field Programmable Logic circuits described in this data book are variations of the two-array architecture. Variations will include output registers, internal feedback, feedback registers, and fixed OR arrays. Figures 8, 9, and 10 represent simplified versions of three specific families of Field-Programmable Logic.

FIELD-PROGRAMMABLE LOGIC ARRAY (FPLA)

The basic two-array structure developed in the symbology section is more commonly referred to as a *Field-Programmable Logic Array*. A useful addition to this structure would be an output-enable function as shown in the generalized FPLA diagram below.

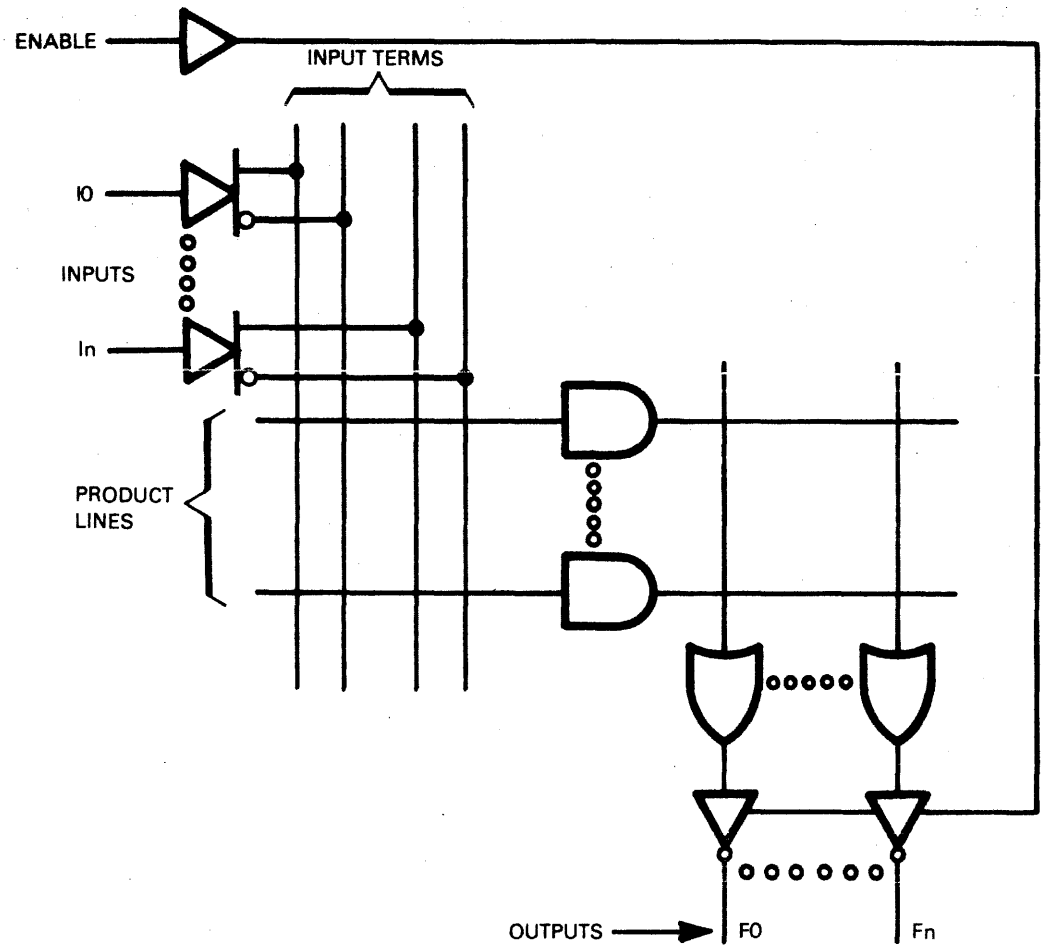

FIGURE 8

TEXAS INSTRUMENTS
POST OFFICE BOX 225012 • DALLAS, TEXAS 75265

© IC MASTER 1984

FIELD-PROGRAMMABLE LOGIC SEQUENCER (FPLS)

Field-Programmable Logic Sequencers (FPLS) are designed to solve state-machine problems of the Mealy type. Based on the FPLA structure, they include flip-flop elements in feedback paths between the OR and AND arrays as shown in Figure 9. These flip-flop elements can be of the D type or J-K type. Logic levels from the OR array can also be stored in flip-flop elements in each output.

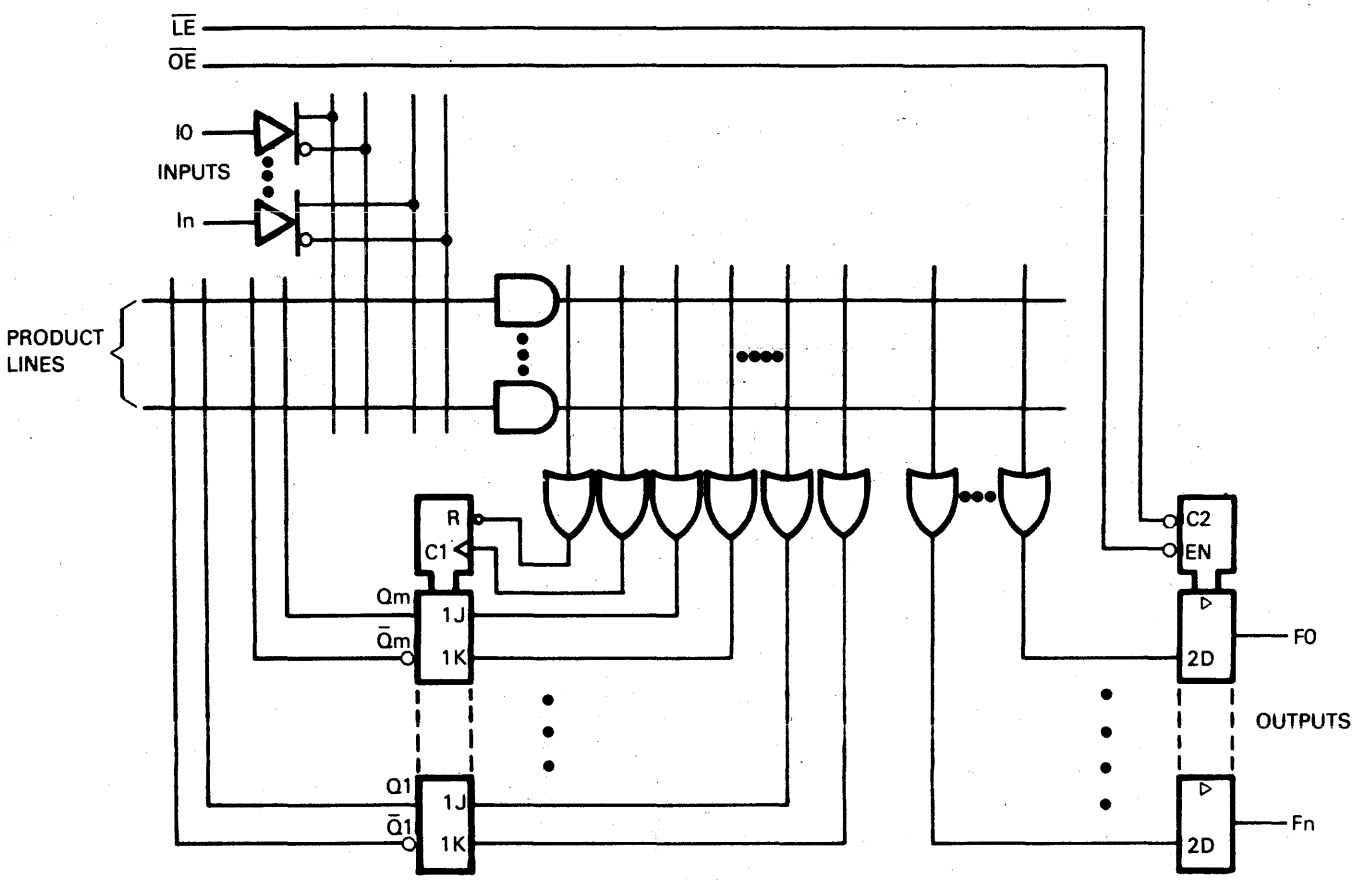

FIGURE 9

© IC MASTER 1984

FIXED-OR ARRAYS (FOA)

The *Fixed-OR Array* is a special case of the FPLS that is capable of solving Mealy-type state-machine problems. The FOA does not have a Programmable-OR Array. Product terms are partitioned and allocated to specific outputs. All product terms allocated to an output are summed with a single OR gate. Output feedback, as well as registered inputs and outputs, are added to the structure to increase logic utility. Figure 10 includes generalized diagrams of various FOA structures.

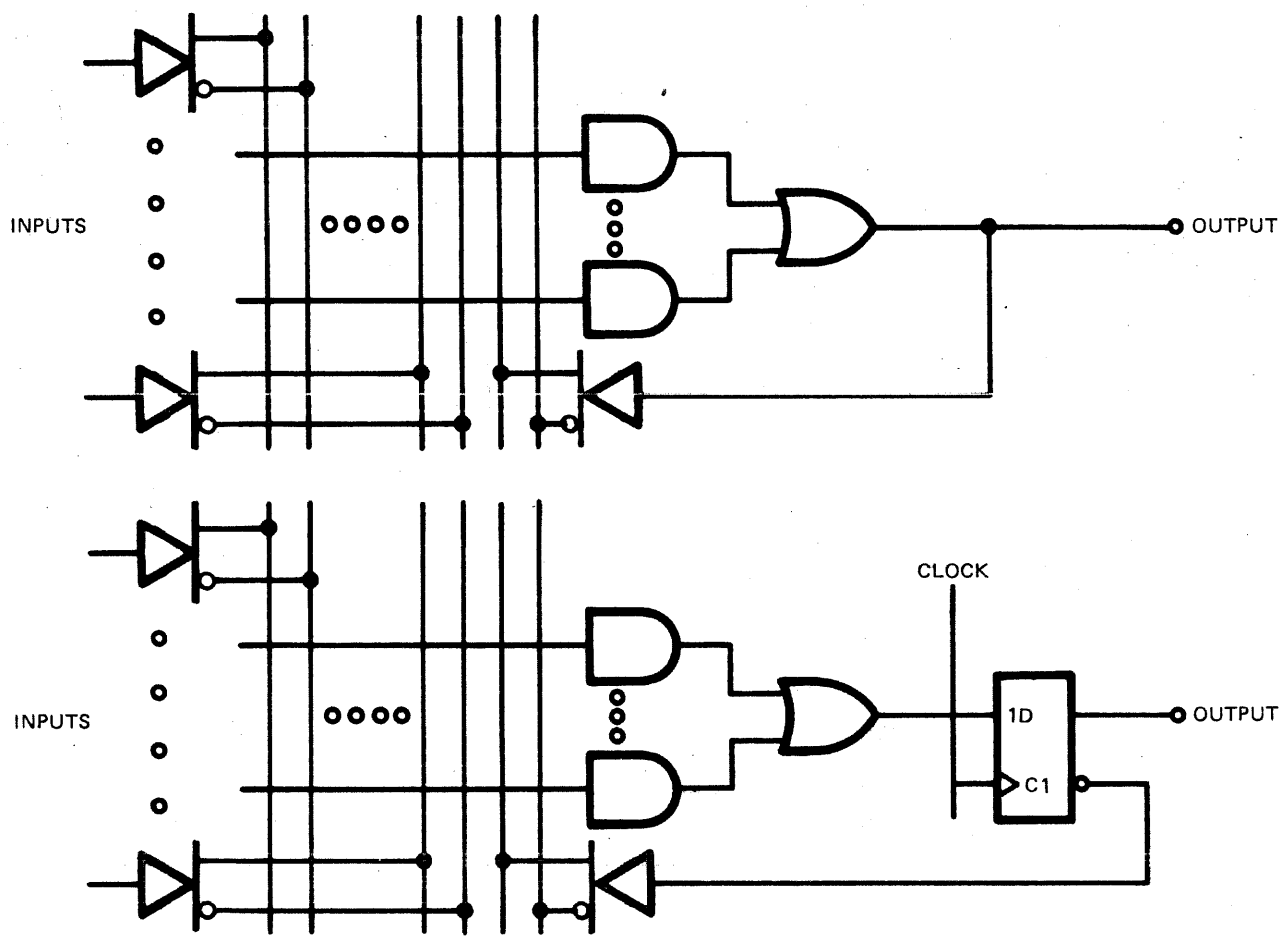

FIGURE 10

DESIGNING WITH FIELD-PROGRAMMABLE LOGIC ARRAYS

The basic logic implementation of Field-Programmable Logic devices is the previously developed AND-OR array. Additions to this structure provide unique functional capabilities. This section will review these logic structures.

INPUTS

All data inputs are configured to provide both true and complement components to the AND array. These inputs are either buffered or registered. Control pins also exist for enable and clock functions.

© IC MASTER 1984

The normal array input is through a buffer with true and complement outputs of the buffer made available to each product line through a TiW fuse.

Some device types in the Field-Programmable Logic family have programmable latched inputs. With the latch fuse intact, the input acts as an edge-triggered D-type register or transparent latch depending on device type. The true and complement outputs of the input latch are made available to each product line through a latch fuse. With the latch fuse blown, the input latch is converted into a normal buffered input (see Figure 11).

REGISTER FUSE INTACT

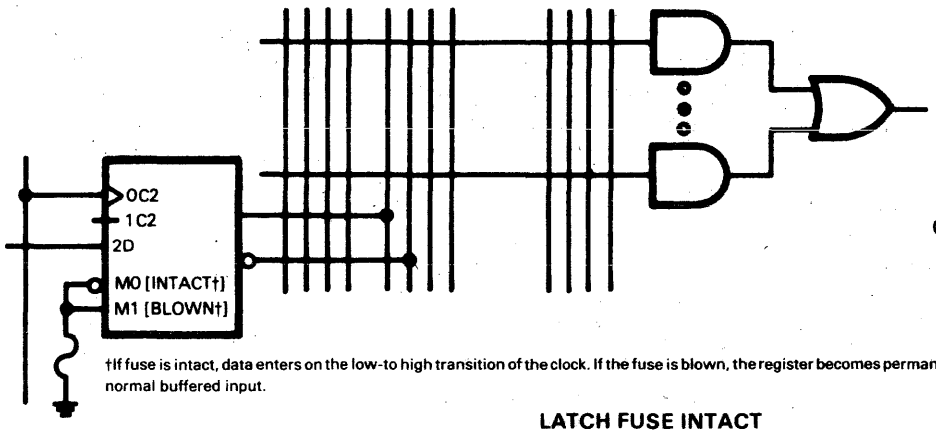

D-TYPE REGISTER FUNCTION TABLE

CLOCK	D	Q	$\bar{Q}$
↑	H	H	L
↑	L	L	H
L	X	Q_0	$\bar{Q}_0$

Q_0 = THE STATE OF Q BEFORE CLOCK ↑

†If fuse is intact, data enters on the low-to high transition of the clock. If the fuse is blown, the register becomes permanently transparent and is equivalent to a normal buffered input.

LATCH FUSE INTACT

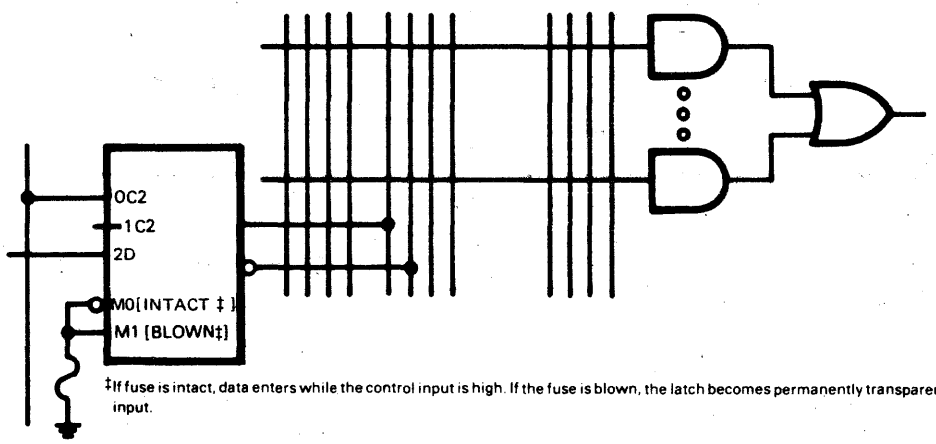

TRANSPARENT LATCH FUNCTION TABLE

ENABLE	D	Q	$\bar{Q}$
H	L	L	H
H	H	H	L
L	X	Q_0	$\bar{Q}_0$

Q_0 = THE LEVEL OF Q BEFORE ENABLE ↓

‡If fuse is intact, data enters while the control input is high. If the fuse is blown, the latch becomes permanently transparent and is equivalent to a normal buffered input.

REGISTER/LATCH FUSE BLOWN

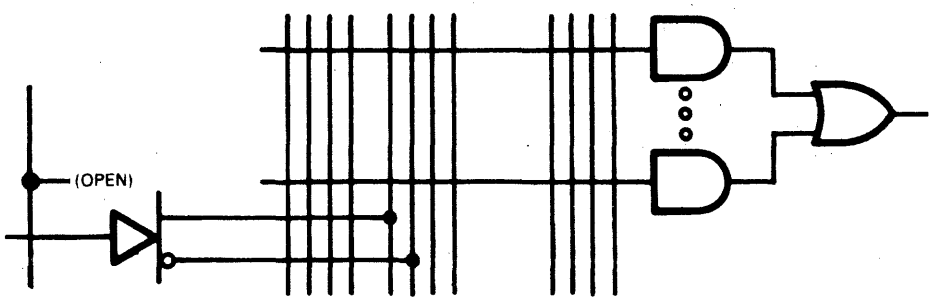

FIGURE 11

© IC MASTER 1984

CONTROL PINS

Clock and latch-enable pins allow external control of input and output latches. Output enable controls the operation of the registered three-state outputs.

OUTPUTS

Various output configurations provide a design flexibility not previously available to the designer using catalog logic.

- PROGRAMMABLE I/O - The combinational output of the FOA incorporates 3-state drivers if the enable function is logically controlled by the AND array (see Figure 12). This allows the output to be programmed as an input, an output, or logic-controlled I/O.

- 3-STATE OUTPUTS - The FPLA and FPLS have output enable pins available for 3-state control, and the registered outputs of the FOA are controlled by a common output enable. Three-state control of the combinational outputs of the FOA is accomplished through programming as described earlier.

PROGRAMMABLE 3-STATE OPERATION
ALL FUSES BLOWN . . . NORMAL OUTPUT
ALL FUSES INTACT . . . OUTPUT IN HIGH-Z STATE
FUSES SELECTED . . . PROGRAMMED I/O

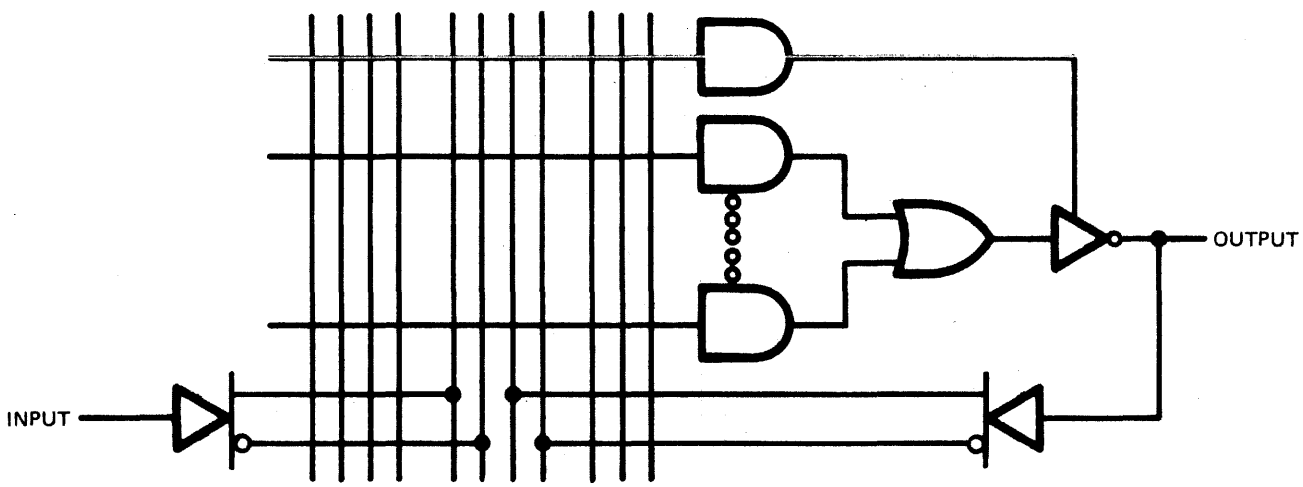

FIGURE 12

- REGISTERED OUTPUTS - The FPLS and some FOA's have latches on their outputs. The FPLS has a transparent latch on each of its 6 outputs. The output function levels are stored by a common asynchronous latch enable pin $\overline{LE}$.

TRANSPARENT LATCH
FUNCTION TABLE

$\overline{LE}$	D	Q
L	L	L
L	H	H
H	X	Q_0

Q_0 = THE LEVEL OF Q BEFORE $\overline{LE}$ ↑

© IC MASTER 1984

The output (D) latch on the FOA stores output levels with a low-to-high transition of the clock. This structure also provides feedback of Q through a true and complement buffer to the Programmable AND array.

- OPEN-COLLECTOR OUTPUTS - Some devices have open-collector outputs available. These outputs may be wire-ANDed (active-high) or wire-ORed (active-low). This feature requires no external logic, which would add to the component count and propagation delay.

- POLARITY SELECT - Circuitry provides a polarity select fuse for each FPLA output. The function of these fuses is shown in Figure 13.

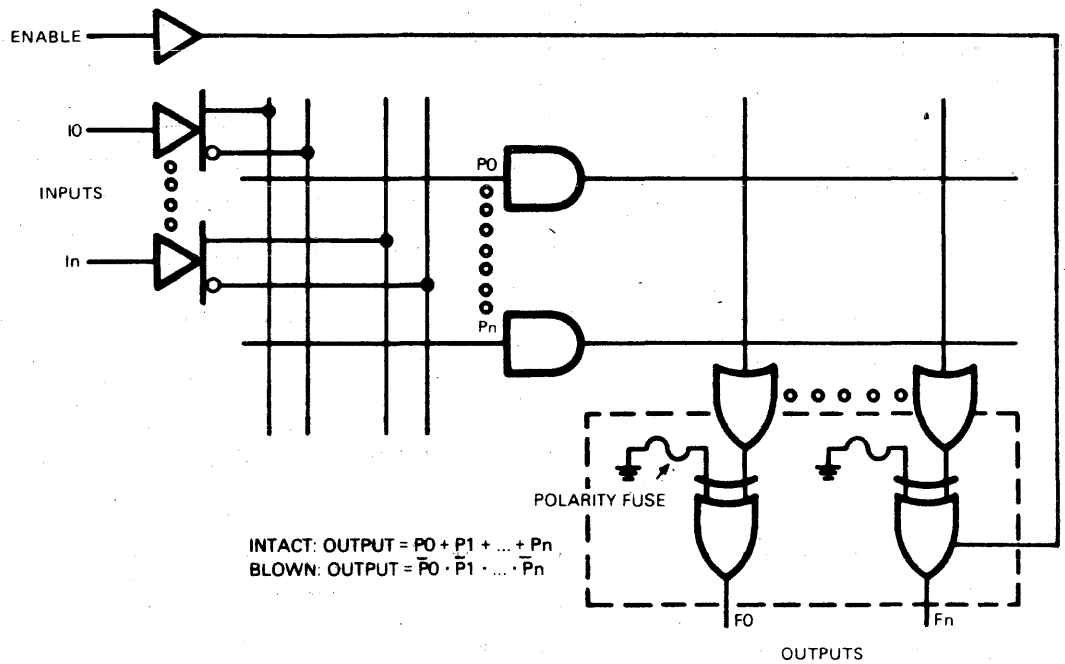

FIGURE 13

FEEDBACK PATHS

The $\overline{Q}$ feedback of the output register of the FOA (see Figure 14), provides the basis for implementing sequential functions. The FPLS (Figure 15), is designed to solve state-machine problems of the Mealy type. It contains four J-K flip-flops completely buried in the feedback path between the OR and AND arrays.

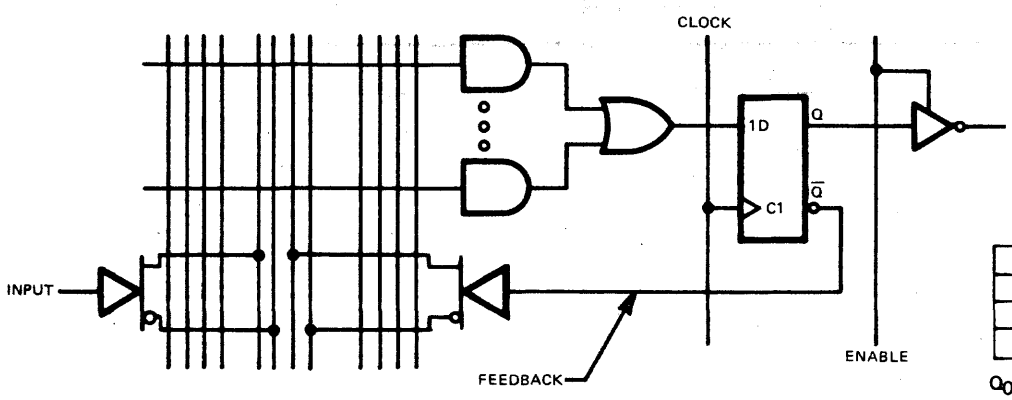

D-TYPE REGISTER FUNCTION TABLE

CLOCK	D	Q	$\overline{Q}$
↑	H	H	L
↑	L	L	H
L	X	Q_0	$\overline{Q}_0$

Q_0 = THE LEVEL OF Q BEFORE CLOCK ↑

FIGURE 14

© IC MASTER 1984

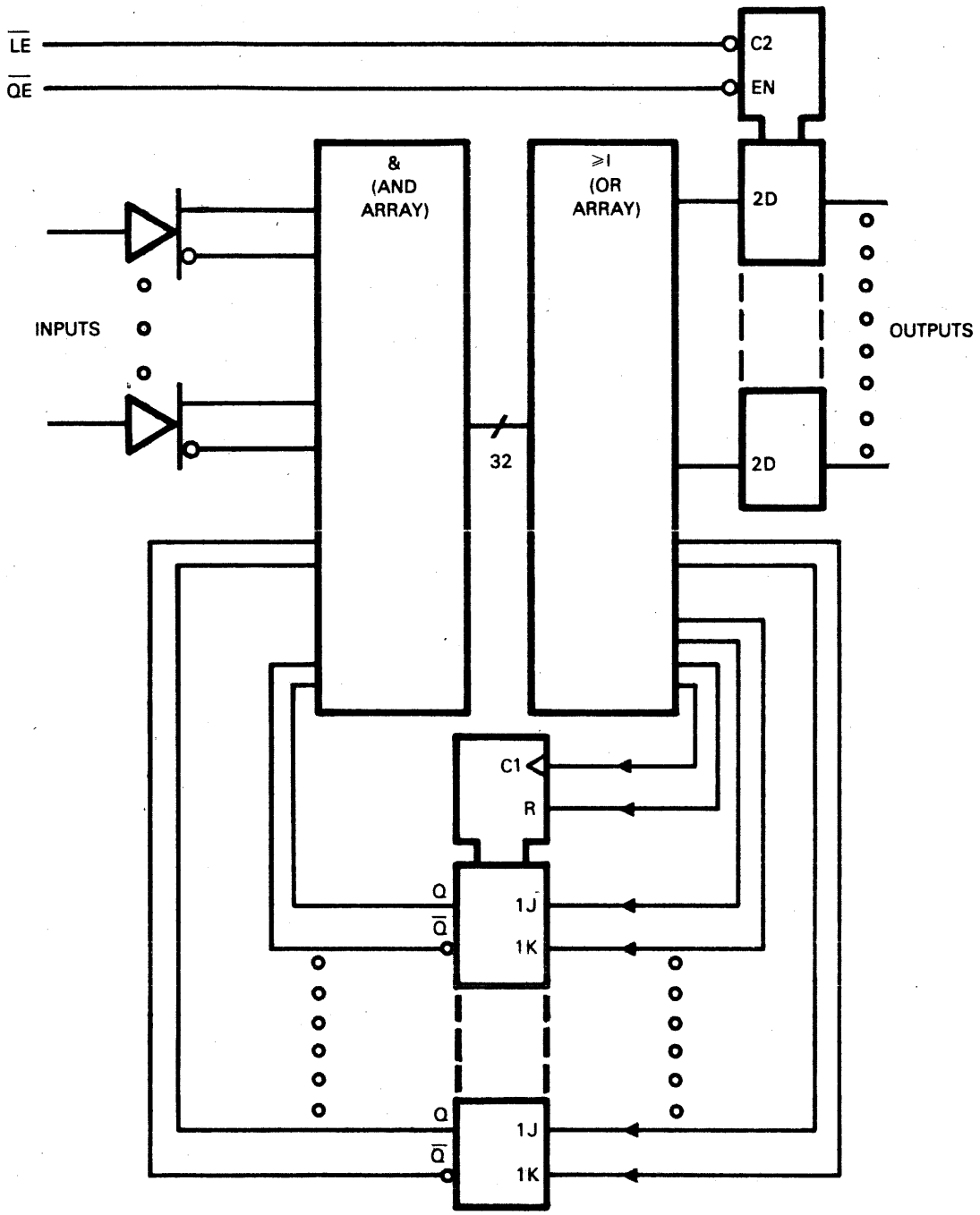

FIGURE 15

TEXAS INSTRUMENTS
POST OFFICE BOX 225012 • DALLAS, TEXAS 75265

© IC MASTER 1984

LOGIC BLOCK EQUIVALENCE

Now that the individual circuit functions have been discussed, we will review the implementation of each of the basic logic functions (AND, OR, NAND, NOR, and exclusive OR). Figure 16 presents a comparison of basic logic function, the logical equivalent, and the implementing logic diagram for a nonregistered output.

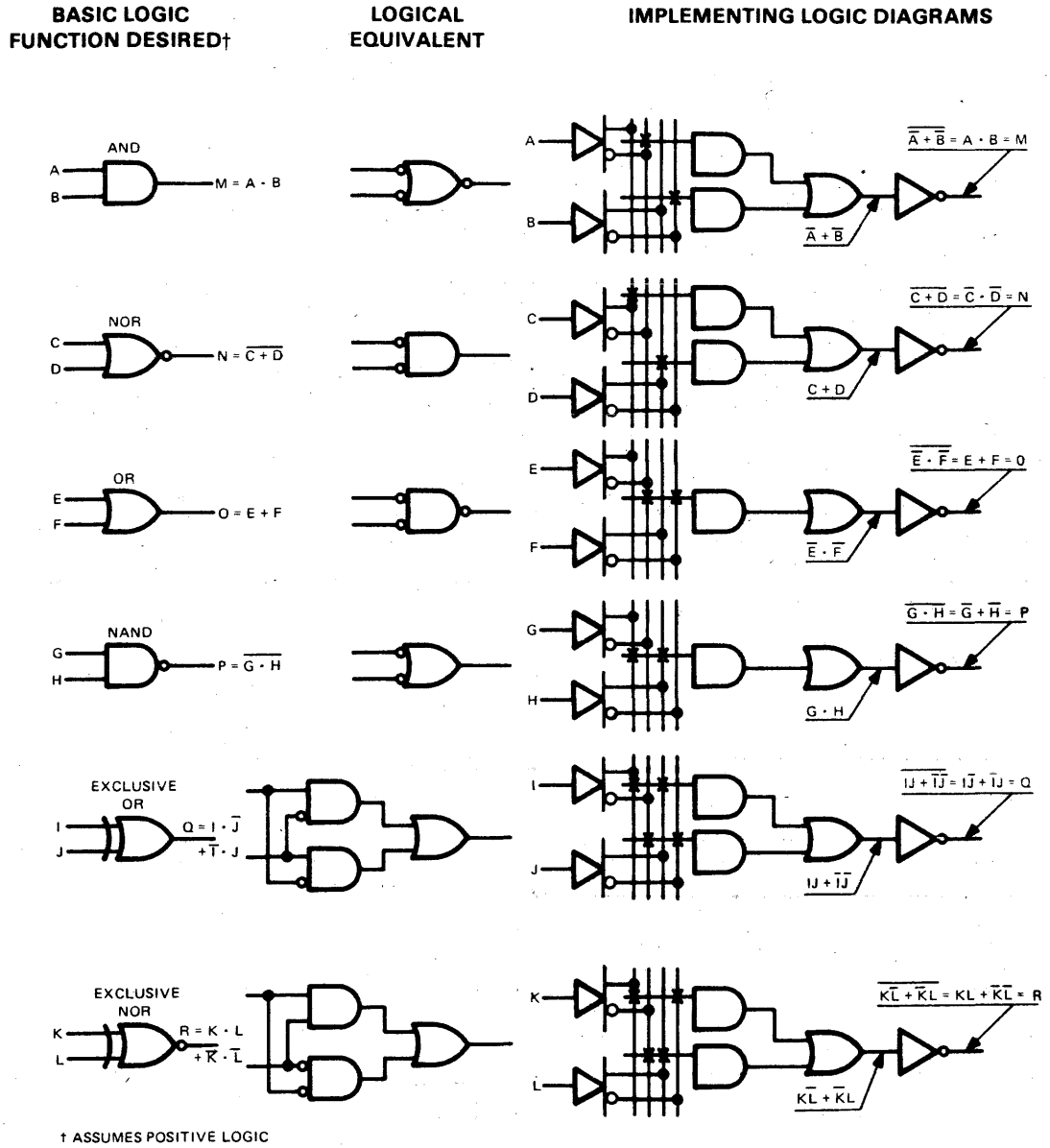

FIGURE 16. COMPARISON OF BASIC LOGIC FUNCTIONS

REFERENCE INFORMATION

Comprehensive comparisons of Low-Power Schottky (LS), Advanced Schottky (AS), and Advanced Low-Power Schottky (ALS), as well as details for circuit design, are presented in our Application Report Number B215, "Series 54ALS/74ALS Schottky TTL." Application Report B215, used in conjunction with the data sheets for the specific device, will allow confident designing with Field-Programmable Logic.

PROGRAMMING FIELD-PROGRAMMABLE LOGIC

Each device data sheet includes a programming procedure that defines the conditions for programming. Programmers are commercially available for most devices with equipment for future devices in development. Listed below are some of the manufacturers of programming equipment.

- Cybernetic PGM Systems
- Data I/O
- Kontron
- Pro-Log
- Stag Systems
- Structured Design
- Curtis Electro Devices
- Valley Data Sciences
- Storey Systems
- Varix
- Sunrise Electronics

Device design has been coordinated with Data I/O and their Model 19 has been used throughout design and characterization. For a current list of certified programmers, please contact your local TI sales representative.

Programming FPLAs and FPLSs is largely manual. Computer-controlled programming capability currently exists for 20-pin Fixed-OR Arrays. Control is by means of computer software, which is available from the manufacturer. Software for 24-pin Fixed-OR Arrays is under development and will be included in later application notes.

PREPARATION AND PROGRAMMING

Regardless of the type of equipment to be used for actually programming devices (blowing fuses), the basic design and programming requirements are the same. Figure 17 presents a simplified flow chart of programming options.

Since the Fixed-OR Array affords the widest variety of parts and output options, it will be used for both the manual and computer-aided examples. First, we will describe the circuit selected for the example, then discuss the specific steps required prior to programming the parts.

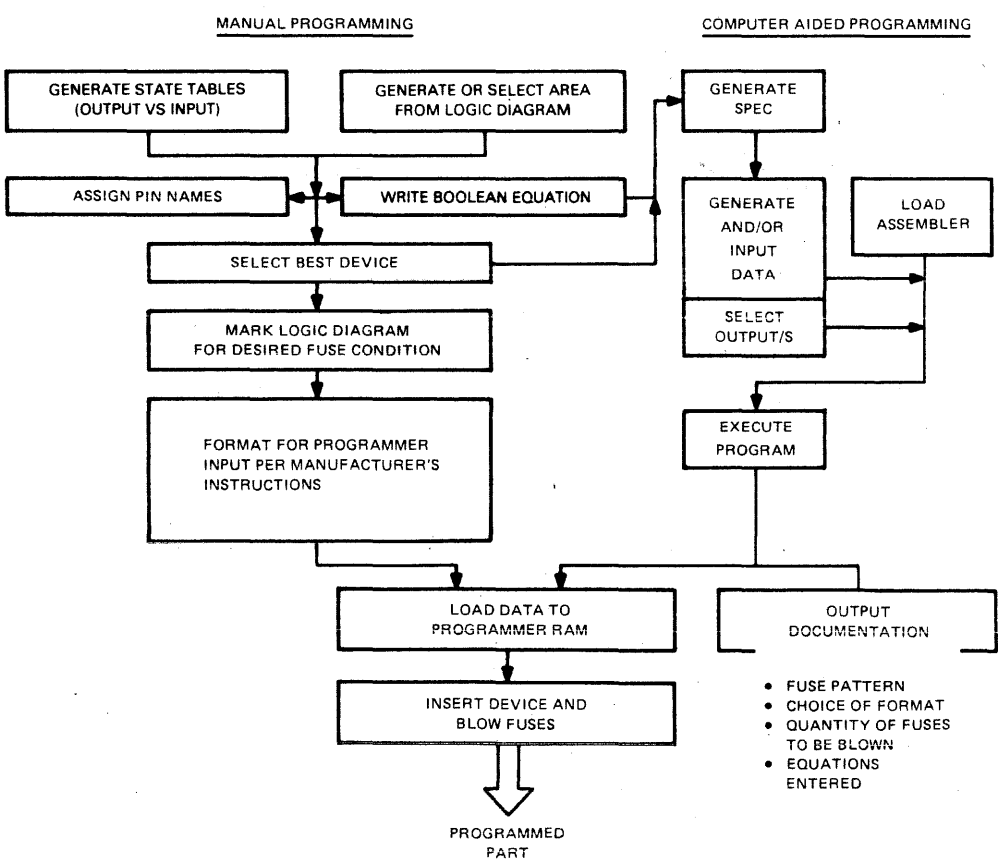

FIGURE 17. SIMPLIFIED FLOW CHART OF PROGRAMMING OPTIONS

TEXAS INSTRUMENTS
POST OFFICE BOX 225012 • DALLAS, TEXAS 75265

© IC MASTER 1984

PROGRAMMED EXAMPLE

Figure 18 is a partial schematic of the decoding portion of a commercially used video controller as implemented with standard catalog SSI logic. Circuit analysis reveals that this circuit is primarily a waveform generator designed to decode the state of the 5-bit counter. The edge-triggered latches are clocked and cleared with respect to the clock (CK) input. Figure 19 is the timing diagram generated to establish the individual waveforms. The labeling defined in the legend of Figure 18 will help understand the partitioning used to implement this circuit using Fixed-OR-Arrays. Most of the original circuit can be implemented by a direct function for function conversion, however, some rearrangement is required to take full advantage of the flexibility of the Fixed-OR-Arrays. Since the FOA has a common clock and no clear, $\overline{I}$ must be developed as shown in Figure 20.

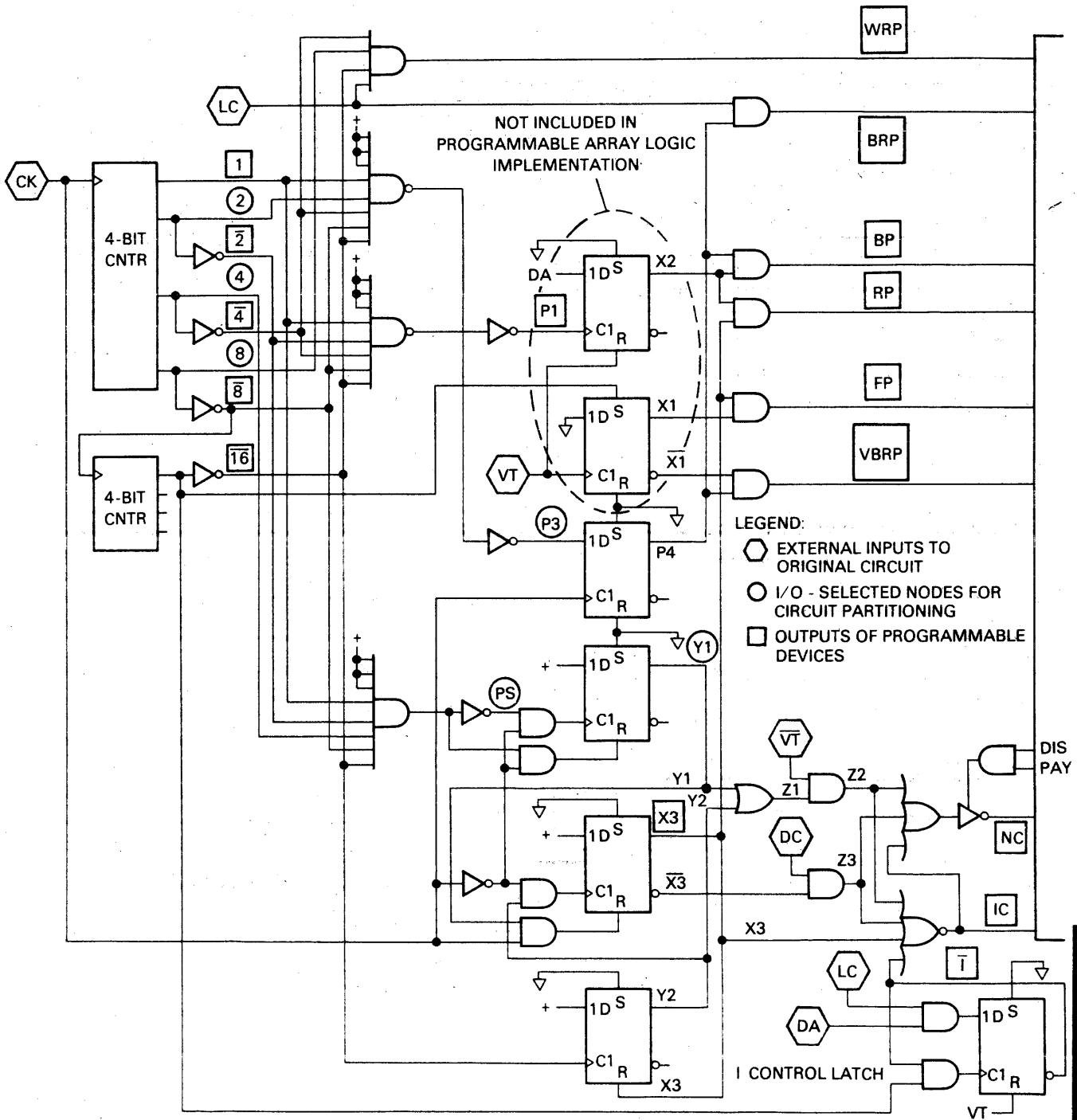

FIGURE 18. DECODING PORTION OF VIDEO CONTROLLER WITH STANDARD CATALOG LOGIC

© IC MASTER 1984

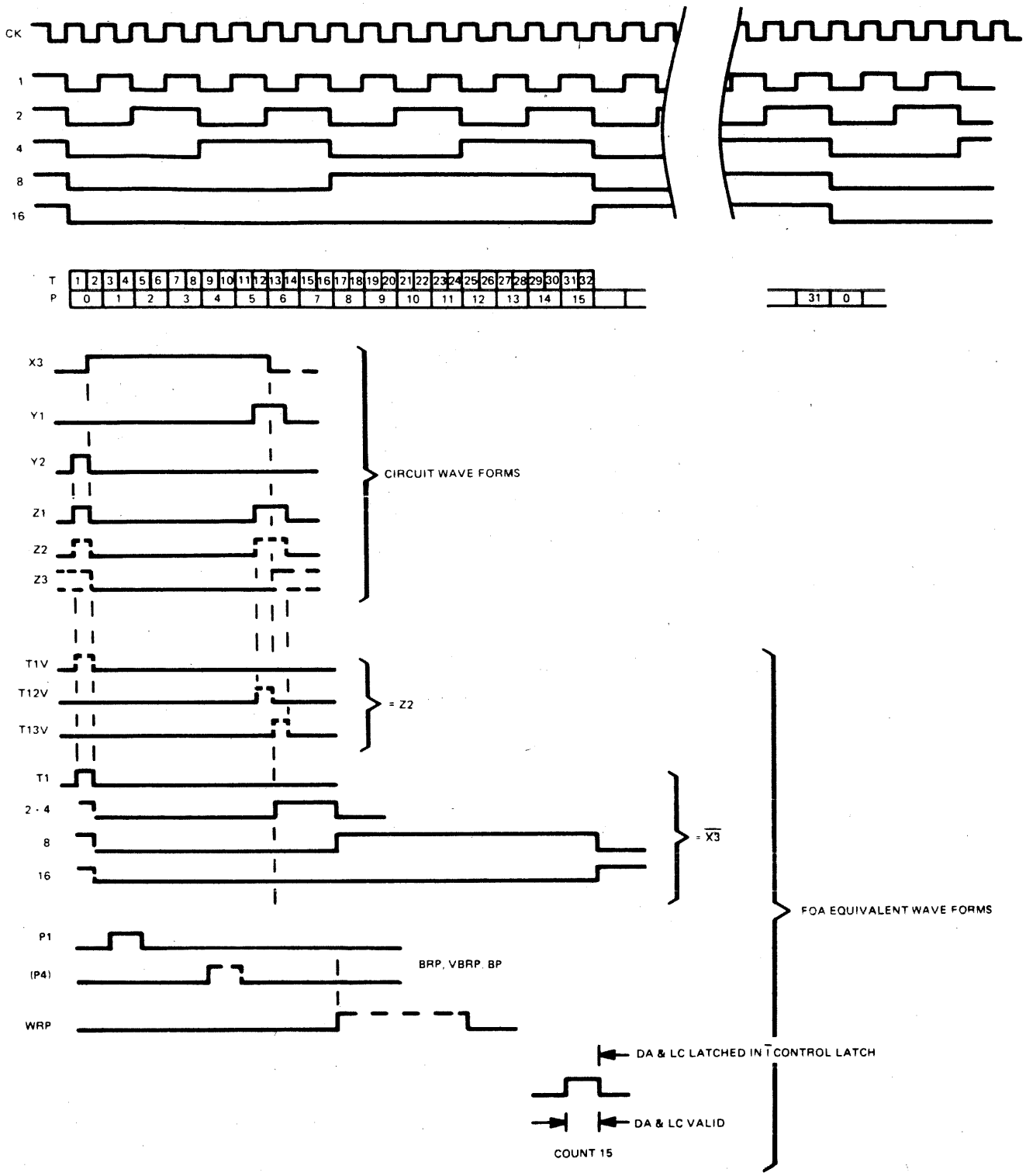

FIGURE 19. TIMING DIAGRAM FOR VIDEO CONTROLLER (SEE FIGURE 18)

TEXAS INSTRUMENTS
POST OFFICE BOX 225012 • DALLAS, TEXAS 75265

© IC MASTER 1984

By partitioning the circuit as shown in Figure 18, a pin assignment can be made and the most suited Fixed-OR Array selected. In this example, the 'PL16R6 and 'PL16L8 have been selected. The logic diagram for the equivalent circuit as implemented using the selected devices are shown in Figure 20 and Figure 21 respectively. Figure 22 presents the detailed schematic of the counter. The counter implementation is a part of the 'PL16R6 represented in Figure 20. Figure 21 is included only to complete the conversion example (programming is not shown). The combination of (1) feedback buffers as inputs with true and complement, (2) input true and complement, (3) common clock for D latches and the selectable use of each input allows the entire circuit shown in Figure 18 (excluding the one device circled) to be replaced by two array-logic devices. This results in a part count reduction of 17 to 2 (88%) and an interconnect reduction of 83% plus the reduction in printed circuit board complexity and area.

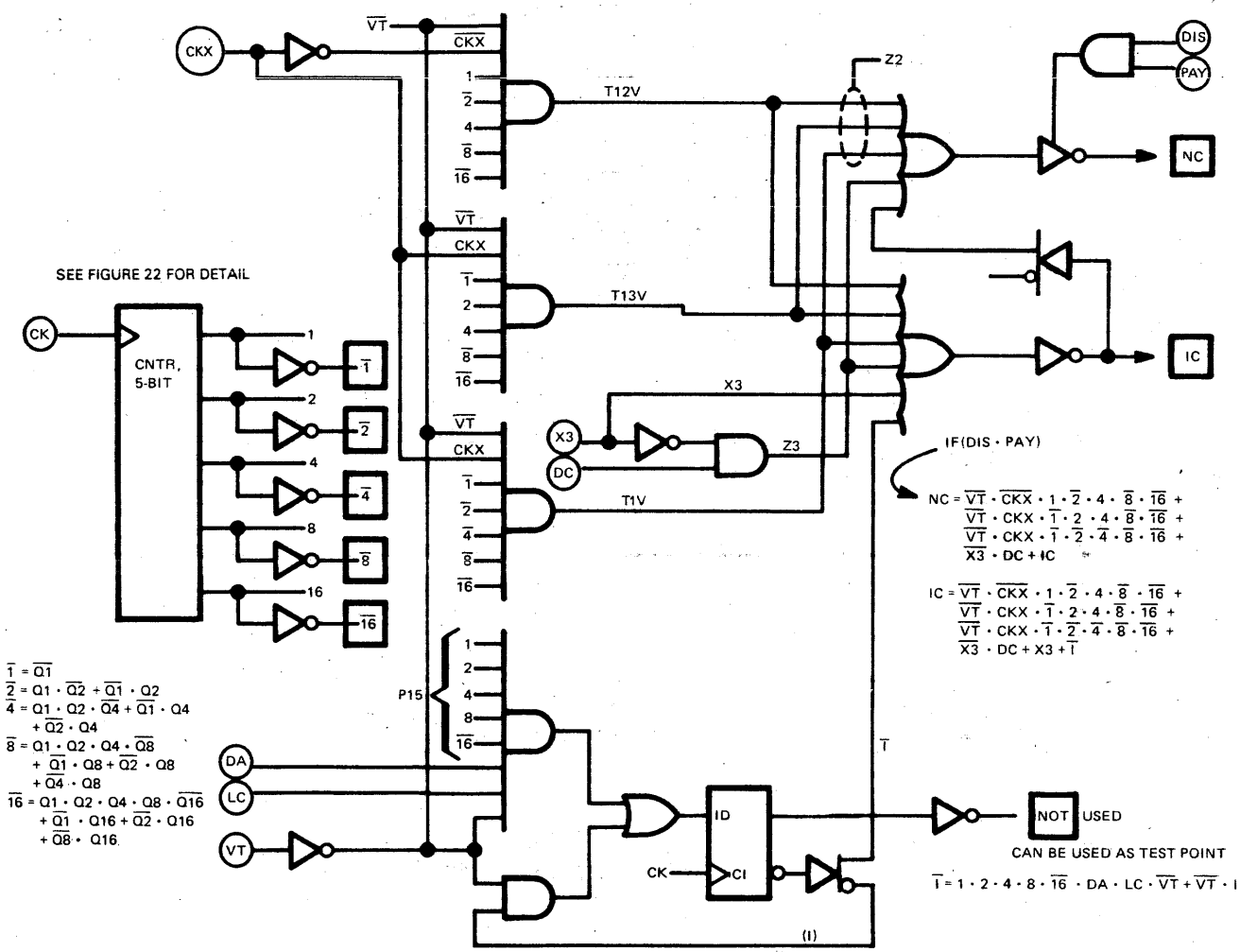

FIGURE 20. VIDEO CONTROLLER IMPLEMENTATION, DECODE NUMBER 1 FOR 'PL16R6

© IC MASTER 1984

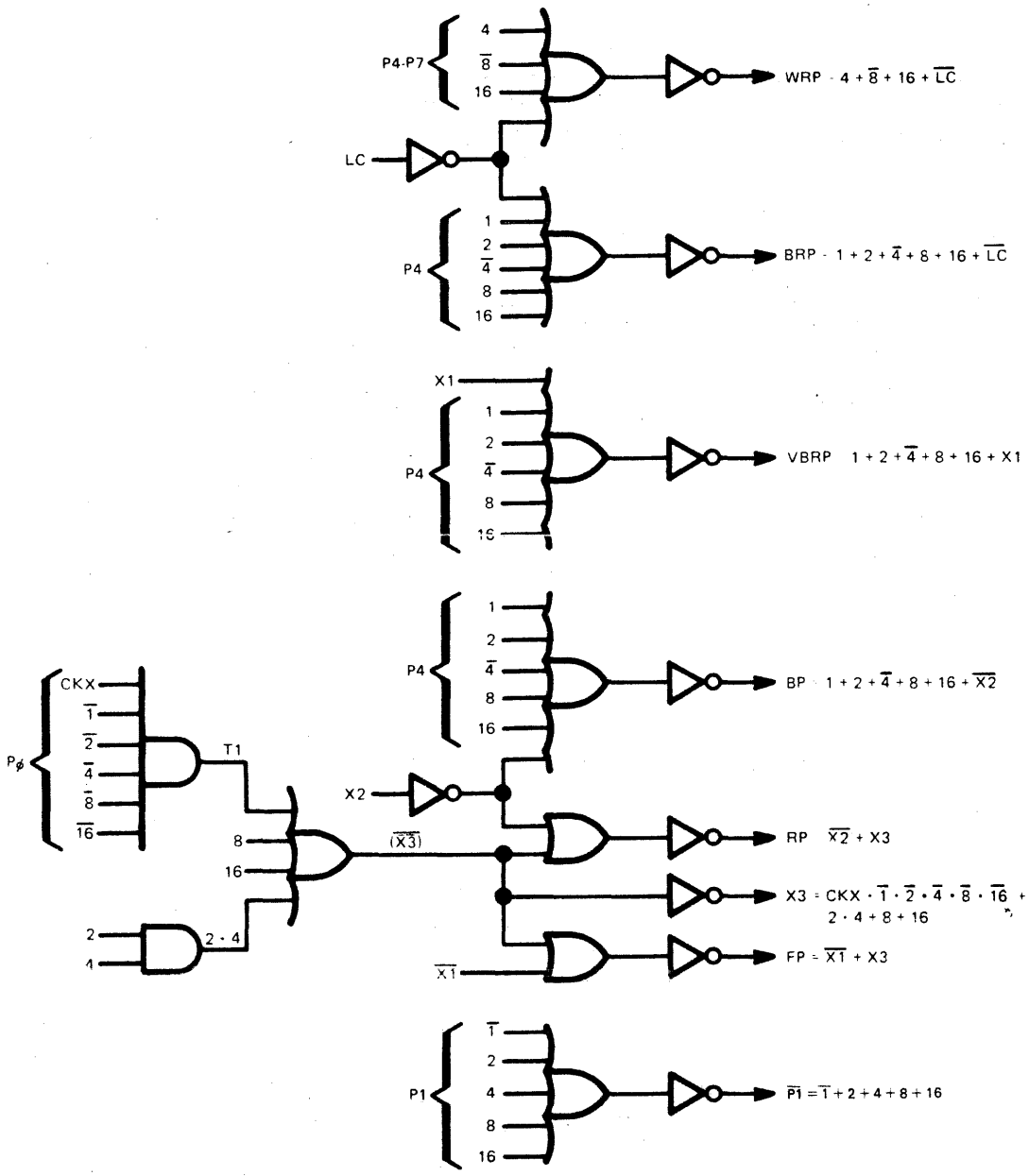

FIGURE 21. VIDEO CONTROLLER IMPLEMENTATION, DECODE NUMBER 2 FOR 'PL16L8

TEXAS INSTRUMENTS
POST OFFICE BOX 225012 • DALLAS, TEXAS 75265

© IC MASTER 1984

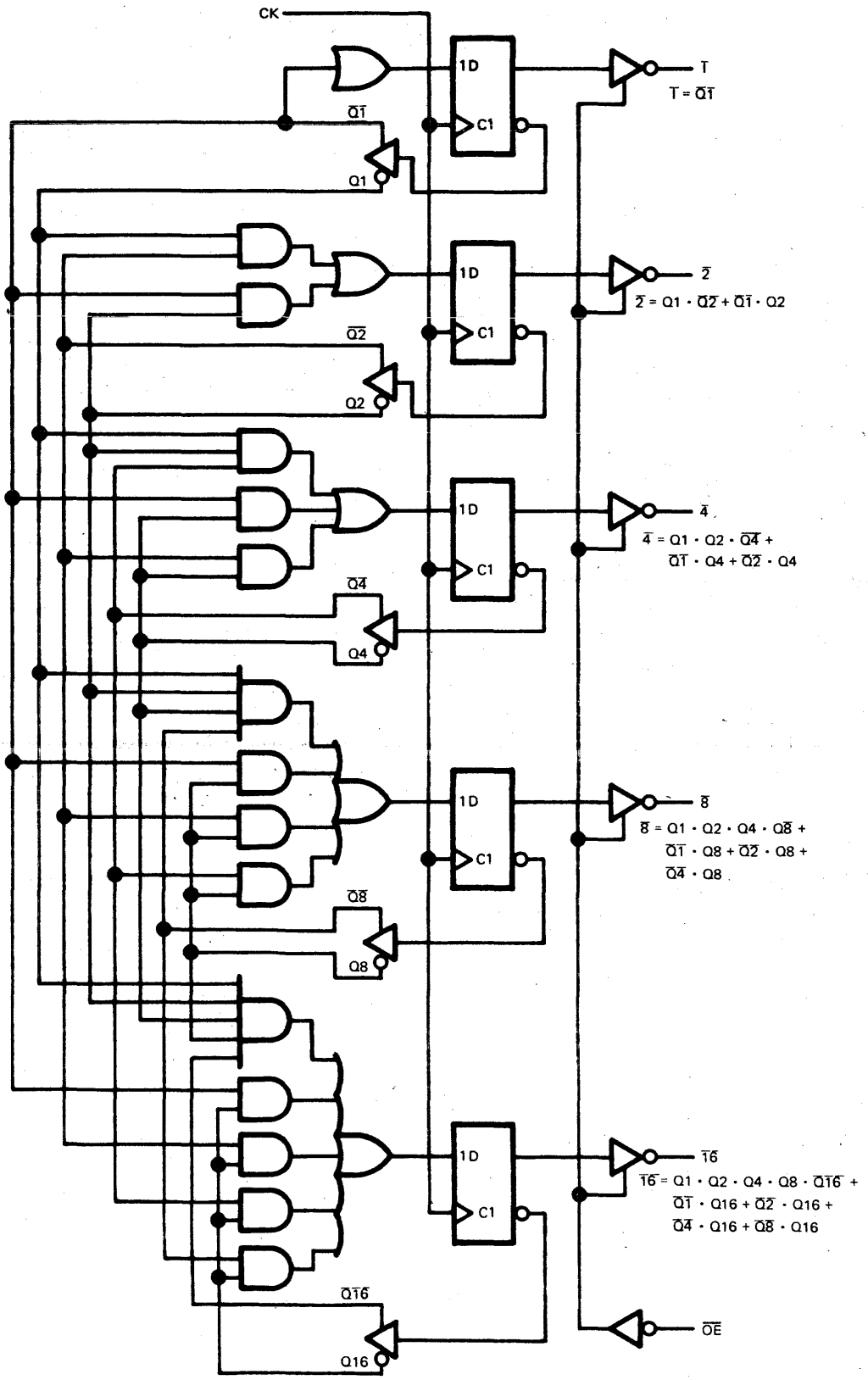

FIGURE 22. FIXED-OR ARRAY 5-BIT COUNTER IMPLEMENTATION

© IC MASTER 1984

MANUAL PROGRAMMING EXAMPLE

Now that logic equations have been generated in Figure 20 and Figure 21 as a result of the analysis and restructuring of the circuit implementation, we are ready to prepare for programming the devices as follows:

1. Take a copy of the logic diagram for the selected device (see Figure 23).
2. Label each output.
3. Assign names to each input. In Figure 20 the inputs are circled and the outputs enclosed by a square.
4. Mark the location of each fuse required to implement the equations. Note that all inputs to the array for outputs $\overline{1}$ through $\overline{16}$ are from the feedback buffers. Example: $\overline{2}$ on pin 17 is fed back to input lines 10 and 11.

To implement the equation $\overline{2} = Q1 \cdot \overline{Q2} + \overline{Q1} \cdot Q2$, place an X at the intersection of

INPUT LINE	PRODUCT LINE
7(Q1)	16
10($\overline{Q2}$)	16
6($\overline{Q1}$)	17
11(Q2)	17

NOTE: The inputs DIS and PAY are not on the original schematic. They have been used here to demonstrate (1) the simplicity of programming for three-state control, (2) the IF statement for the computer-aided program, and (3) the device versatility.

5. The preparation for programming the device is now complete except for formatting the fuse locations to comply with the input requirement of a particular programmer. Since equipment manufacturers have not yet standardized on address and data input formats, refer to the programming instructions for your particular programmer.

COMPUTER-AIDED PROGRAMMING EXAMPLE

Programmers are available with interface packages that will allow the simplification of inputting data. Options vary from the ability to output from paper tape to direct terminal or computer control. Many data formats are also available for the remote controlled programmers. Examples of acceptable formats include HEX, BHLF, and BPNP.

The equations, part number, and pin assignment shown in Figure 20 (same used in manual programming example) are the only requirements for the computer program to generate the fuse pattern for our example as shown in Figure 26. However, a specification such as shown in Figure 25 is recommended not only to assist in inputting data but as a documentation tool to identify and describe the unique part created by programming. Examples of HEX and BLHF output formats are also included in Figure 26.

NOTE: Since the programming results cannot be verified after the security fuses are blown, a separate test fixture is required to blow these two fuses (see the data sheet for instructions).

TEXAS INSTRUMENTS
POST OFFICE BOX 225012 • DALLAS, TEXAS 75265

© IC MASTER 1984

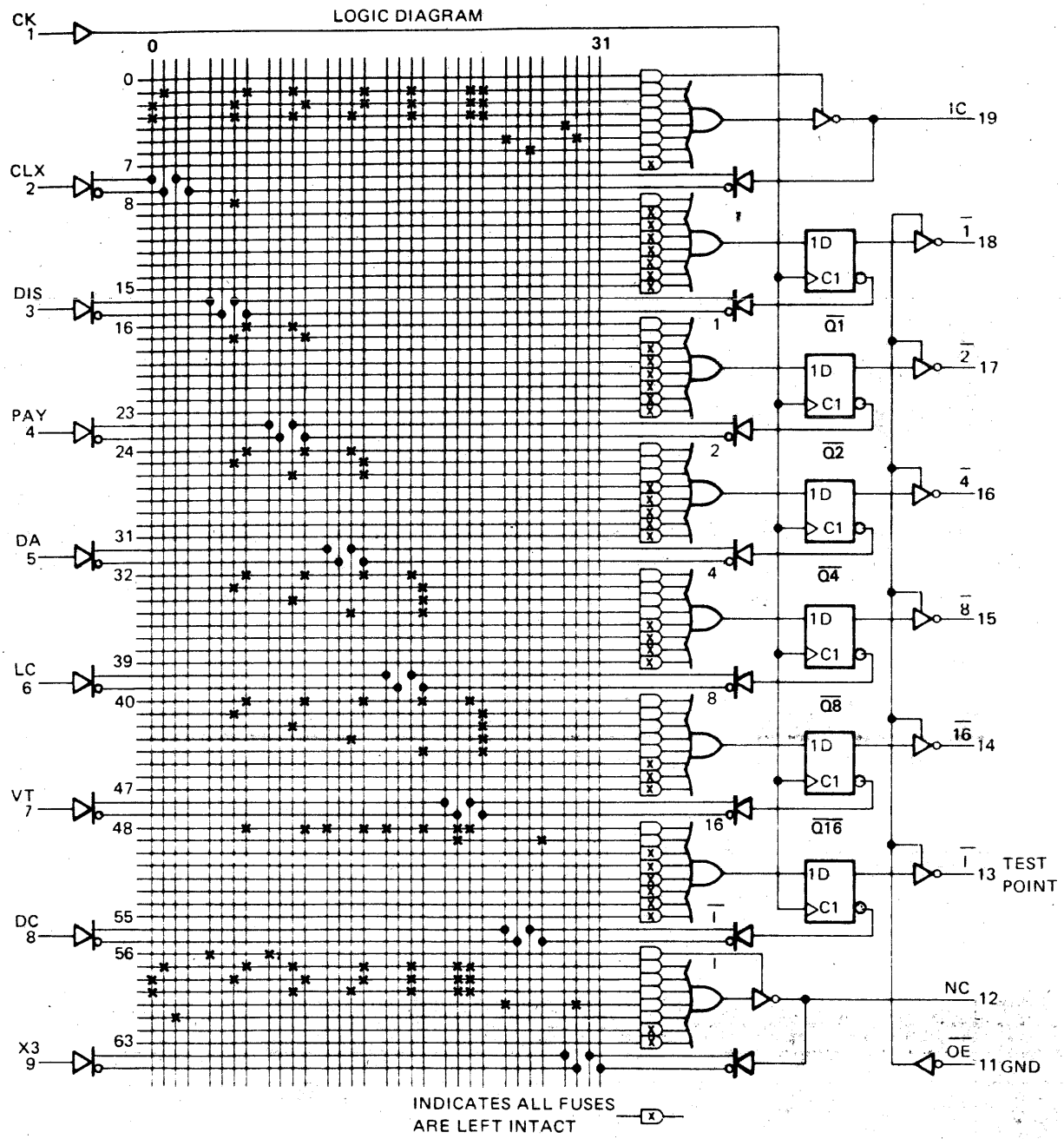

FIGURE 23. 'PL16R6 LOGIC DIAGRAM

© IC MASTER 1984

Error Detection and Correction

using SN74ALS632

Application Report

TEXAS INSTRUMENTS

© IC MASTER 1984

TECHNIQUES IN ERROR DETECTION & CORRECTION USING TEXAS INSTRUMENTS SN74ALS632N

Robert K. Breuninger

Contributors
W.T. Greer, Jr., David Mondeel, Jay Maxey

INTRODUCTION

Need For Error Correction:

In the extremely competitive, and expanding market of microprocessor based systems, only a few suppliers will likely survive. The eventual winners will be the systems which can deliver the most reliable operation, or in otherwords, the best quality. With the tendency toward 32-bit systems, and applications such as word processing, memory sizes will continue to be forced larger, and larger. This trend only increases the probability of memory failure due to either hard or soft errors. To ensure the high reliability of these larger memory sizes, error detection and correction will have to be considered by the system designer.

The SN54/74ALS632 through SN54/74ALS635 provide a simple, but affective solution to these requirements in 32-bit systems. In addition, the 'ALS632 and 'ALS633 provide the necessary hardware to perform byte-write operations, which are typically used in the more advanced systems. To ensure the integrity of the error detection and correction circuit itself, diagnostic capabilities have been provided in all four devices.

The 'ALS632 series devices are not limited to only 32-bit systems however, they can be easily implemented in 16- or 24-bit systems. In the case of 16-bit systems, the additional memory needed for holding the check bits can be reduced when compared to conventional 16-bit EDAC's employing 6 check bits.

In addition to the 'ALS632 series, Texas Instruments Low Power Schottky department also offers 8- and 16-bit solutions with their SN74LS636N and SN74LS630N families respectfully. These devices will not be covered in this discussion, but information on these devices can be easily obtained by contacting TI's Low Power Schottky Department*.

*For additional information, please contact:
Marketing (214) 995-2982
Applications (214) 995-2980

OPERATING CHARACTERISTICS

General Description

The block diagram of Figure 1 shows the architecture of the 'ALS632. Mode of operation is controlled through the S0 and S1 inputs. Data flow requirements are handled via the $\overline{OECB}$ and $\overline{OEB0}$ through $\overline{OEB3}$ 3-state controls. An $\overline{ERR}$ and $\overline{MERR}$ flag is provided to signal the occurrence of a single bit error, or multiple bit error respectively. The latch enable ($\overline{LEDBO}$) control is used in byte write operations and diagnostics. Data is entered, and retrieved, through DB0-DB32 and CB0-CB6 inputs.

Write Mode:

During a memory write cycle, the EDAC is required to generate a 7-bit check word to accompany the 32-bit data word before being written into memory (Figure 2). To place the 'ALS632 in the write mode, simply take S1 and S0 low. Output enable controls $\overline{OEB0}$ through $\overline{OEB3}$ must be taken high. Output enable control $\overline{OECS}$ must be taken low to pass the check word to the external bus. The check word will be generated in not more than 54 ns after the data word is applied. This includes variation across temperature and voltage supply range.

Read-Flag-Correct Operation:

During a memory read cycle, the function of the 'ALS632 EDAC is to compare the 32-bit data word against the 7-bit check word previously stored in memory. It will then flag and correct any single-bit error which may have occurred. Figure 3 shows the two step procedure for correcting a single bit error, while Figure 4 shows the appropriate timing diagram. Single bit errors will be detected through the $\overline{ERR}$ Flag and double bit errors will be detected through the $\overline{MERR}$ Flag.

Originally published Southcon '84

TEXAS INSTRUMENTS
POST OFFICE BOX 225012 • DALLAS, TEXAS 75265

© IC MASTER 1984

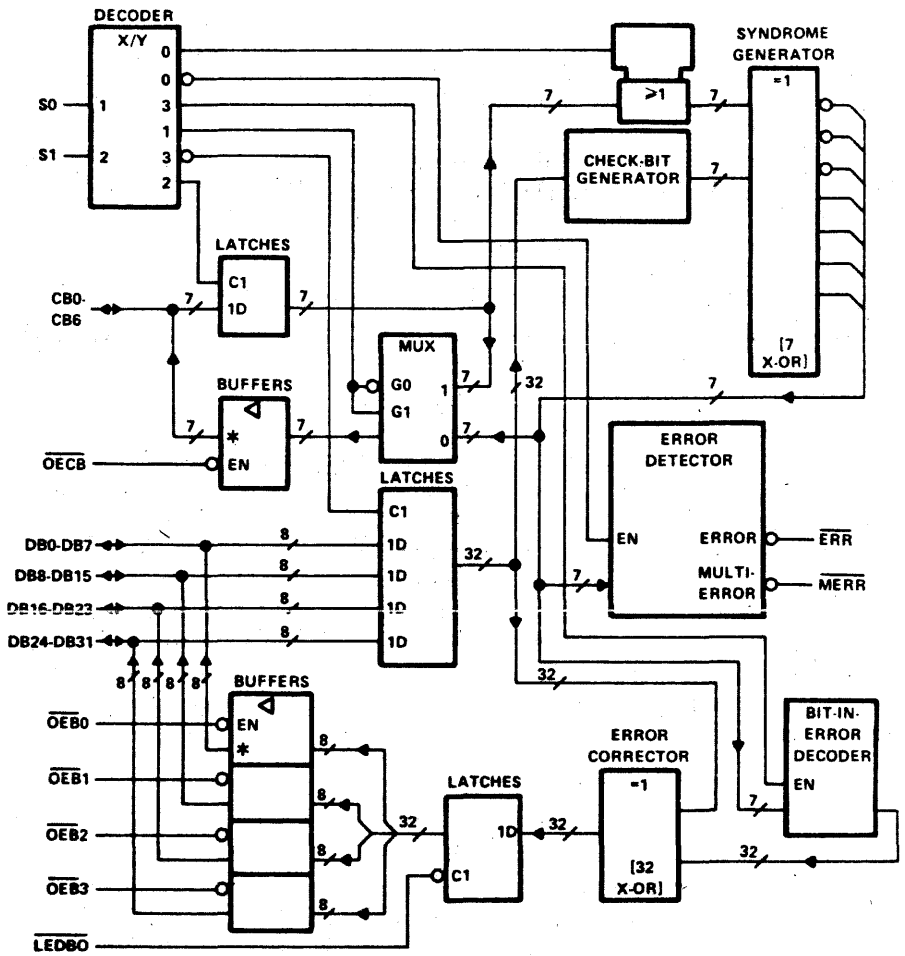

*'ALS632 has 3-state (▽) check-bit and data outputs.

Figure 1. 'ALS632 Logic Diagram

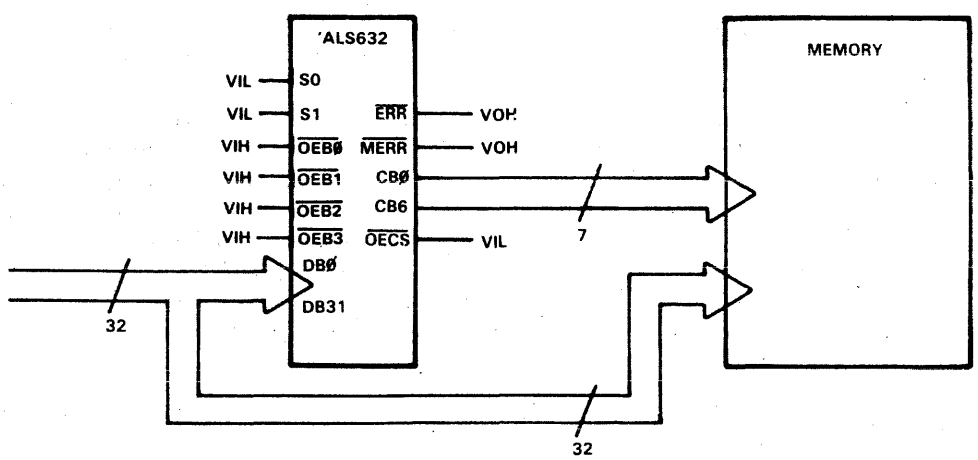

Figure 2. Memory Write Mode

TEXAS INSTRUMENTS
POST OFFICE BOX 225012 • DALLAS, TEXAS 75265

© IC MASTER 1984

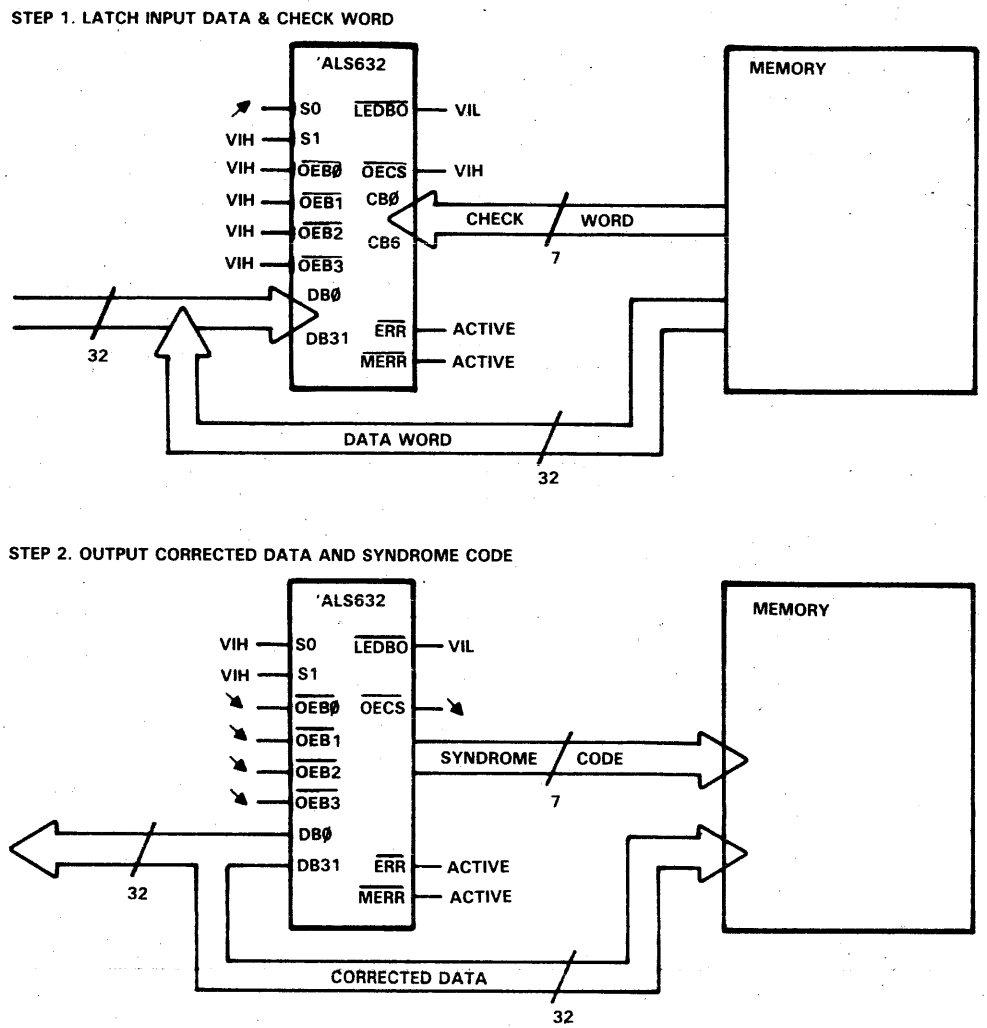

Figure 3. Read-Flag-Correct Operation

It should be noted that the error flags are enabled while still in the read mode. For many applications, the simplest operation can be obtain by always executing the correction cycle, regardless if a single bit error has occurred. Due to the worst case correction speed of the SN74ALS632, this is a feasible alternative.

The most frequently asked question for any EDAC is how fast can a correction cycle be executed. The SN74ALS632N is guaranteed to be able to correct any given data word in not more than 58 ns, assuming the following setup and hold times are satisfied. It is also important to note that this includes variation across VCC and temperature. Before S0 can be taken high (Figure 4), the data and check word must be set up at least 10 ns. In addition, the data and check word must be held for at least 15 ns after S0 goes high. This will ensure that the data and check word has been saved in the EDAC's input latches. After the hold time has been satisfied, the source which is driving the data bus can be placed in high impedance and the EDAC's output drivers can be enabled. This is accomplished by taking $\overline{OEB0}$ through $\overline{OEB3}$ low. Taking $\overline{OECS}$ low, will place the error syndrome code (Table 1) on the check word data bus. This code can be used to determine which memory bit is failing. Couple this with the single error flag and the user now has the capability of pinpointing defective memory chips before they can actually cause system failure.

Another important timing consideration is the time it takes to signal a single bit error. The SN74ALS632N will detect a single bit error in not more than 40 ns and a double bit error will be detected in not more than 60 ns.

Read-Modify-Write Operations:

The 'ALS632 contains the necessary hardware to perform byte-write operations. When performing a read-modify-write function, typically the user would first want

[*continued*]

© IC MASTER 1984

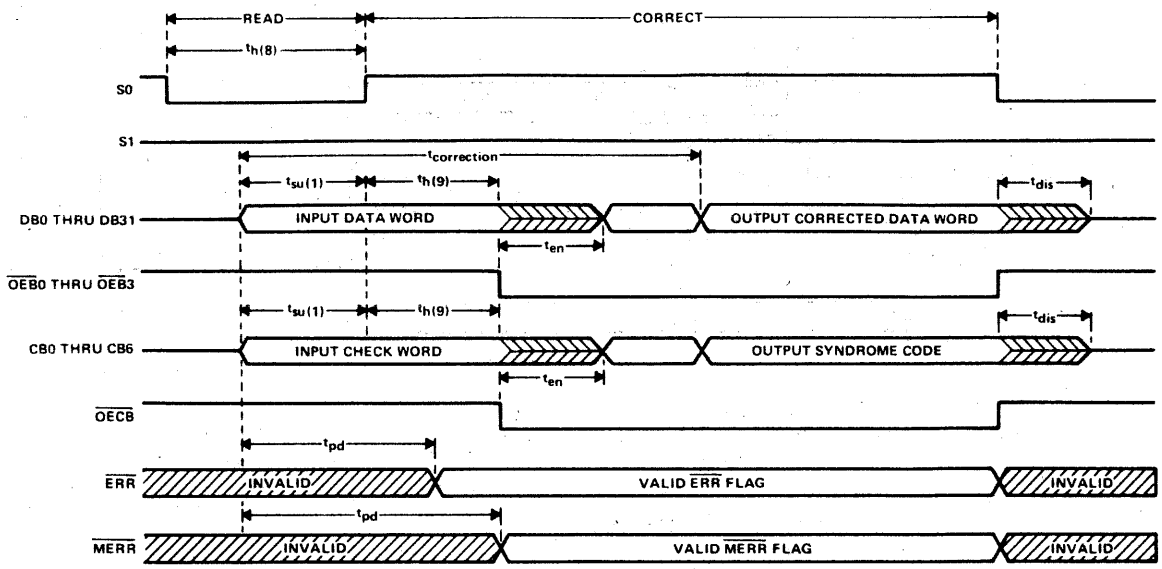

Figure 4. Read-Flag-Correct Timing Diagram

SYNDROME BITS							ERROR	SYNDROME BITS							ERROR	SYNDROME BITS							ERROR	SYNDROME BITS							ERROR
6	5	4	3	2	1	0		6	5	4	3	2	1	0		6	5	4	3	2	1	0		6	5	4	3	2	1	0	
L	L	L	L	L	L	L	unc	L	H	L	L	L	L	L	2-bit	H	L	L	L	L	L	L	2-bit	H	H	L	L	L	L	L	unc
L	L	L	L	L	L	H	2-bit	L	H	L	L	L	L	H	unc	H	L	L	L	L	L	H	unc	H	H	L	L	L	L	H	2-bit
L	L	L	L	L	H	L	2-bit	L	H	L	L	L	H	L	DB7	H	L	L	L	L	H	L	unc	H	H	L	L	L	H	L	2-bit
L	L	L	L	L	H	H	unc	L	H	L	L	L	H	H	2-bit	H	L	L	L	L	H	H	2-bit	H	H	L	L	L	H	H	DB23
L	L	L	L	H	L	L	2-bit	L	H	L	L	H	L	L	DB6	H	L	L	L	H	L	L	unc	H	H	L	L	H	L	L	2-bit
L	L	L	L	H	L	H	unc	L	H	L	L	H	L	H	2-bit	H	L	L	L	H	L	H	2-bit	H	H	L	L	H	L	H	DB22
L	L	L	L	H	H	L	unc	L	H	L	L	H	H	L	2-bit	H	L	L	L	H	H	L	2-bit	H	H	L	L	H	H	L	DB21
L	L	L	L	H	H	H	2-bit	L	H	L	L	H	H	H	DB5	H	L	L	L	H	H	H	unc	H	H	L	L	H	H	H	2-bit
L	L	L	H	L	L	L	2-bit	L	H	L	H	L	L	L	DB4	H	L	L	H	L	L	L	unc	H	H	L	H	L	L	L	2-bit
L	L	L	H	L	L	H	unc	L	H	L	H	L	L	H	2-bit	H	L	L	H	L	L	H	2-bit	H	H	L	H	L	L	H	DB20
L	L	L	H	L	H	L	DB31	L	H	L	H	L	H	L	2-bit	H	L	L	H	L	H	L	2-bit	H	H	L	H	L	H	L	DB19
L	L	L	H	L	H	H	2-bit	L	H	L	H	L	H	H	DB3	H	L	L	H	L	H	H	DB15	H	H	L	H	L	H	H	2-bit
L	L	L	H	H	L	L	unc	L	H	L	H	H	L	L	2-bit	H	L	L	H	H	L	L	2-bit	H	H	L	H	H	L	L	DB18
L	L	L	H	H	L	H	2-bit	L	H	L	H	H	L	H	DB2	H	L	L	H	H	L	H	unc	H	H	L	H	H	L	H	2-bit
L	L	L	H	H	H	L	2-bit	L	H	L	H	H	H	L	unc	H	L	L	H	H	H	L	DB14	H	H	L	H	H	H	L	2-bit
L	L	L	H	H	H	H	DB30	L	H	L	H	H	H	H	2-bit	H	L	L	H	H	H	H	2-bit	H	H	L	H	H	H	H	CB4
L	L	H	L	L	L	L	2-bit	L	H	H	L	L	L	L	DB0	H	L	H	L	L	L	L	unc	H	H	H	L	L	L	L	2-bit
L	L	H	L	L	L	H	unc	L	H	H	L	L	L	H	2-bit	H	L	H	L	L	L	H	2-bit	H	H	H	L	L	L	H	DB16
L	L	H	L	L	H	L	DB29	L	H	H	L	L	H	L	2-bit	H	L	H	L	L	H	L	2-bit	H	H	H	L	L	H	L	unc
L	L	H	L	L	H	H	2-bit	L	H	H	L	L	H	H	unc	H	L	H	L	L	H	H	DB13	H	H	H	L	L	H	H	2-bit
L	L	H	L	H	L	L	DB28	L	H	H	L	H	L	L	2-bit	H	L	H	L	H	L	L	2-bit	H	H	H	L	H	L	L	DB17
L	L	H	L	H	L	H	2-bit	L	H	H	L	H	L	H	DB1	H	L	H	L	H	L	H	DB12	H	H	H	L	H	L	H	2-bit
L	L	H	L	H	H	L	2-bit	L	H	H	L	H	H	L	unc	H	L	H	L	H	H	L	DB11	H	H	H	L	H	H	L	2-bit
L	L	H	L	H	H	H	DB27	L	H	H	L	H	H	H	2-bit	H	L	H	L	H	H	H	2-bit	H	H	H	L	H	H	H	CB3
L	L	H	H	L	L	L	DB26	L	H	H	H	L	L	L	2-bit	H	L	H	H	L	L	L	2-bit	H	H	H	H	L	L	L	unc
L	L	H	H	L	L	H	2-bit	L	H	H	H	L	L	H	unc	H	L	H	H	L	L	H	DB10	H	H	H	H	L	L	H	2-bit
L	L	H	H	L	H	L	2-bit	L	H	H	H	L	H	L	unc	H	L	H	H	L	H	L	DB9	H	H	H	H	L	H	L	2-bit
L	L	H	H	L	H	H	DB25	L	H	H	H	L	H	H	2-bit	H	L	H	H	L	H	H	2-bit	H	H	H	H	L	H	H	CB2
L	L	H	H	H	L	L	2-bit	L	H	H	H	H	L	L	unc	H	L	H	H	H	L	L	DB8	H	H	H	H	H	L	L	2-bit
L	L	H	H	H	L	H	DB24	L	H	H	H	H	L	H	2-bit	H	L	H	H	H	L	H	2-bit	H	H	H	H	H	L	H	CB1
L	L	H	H	H	H	L	unc	L	H	H	H	H	H	L	2-bit	H	L	H	H	H	H	L	2-bit	H	H	H	H	H	H	L	CB0
L	L	H	H	H	H	H	2-bit	L	H	H	H	H	H	H	CB6	H	L	H	H	H	H	H	CB5	H	H	H	H	H	H	H	none

CB X = error in check bit X
DB Y = error in data bit Y
2-bit = double-bit error
unc = uncorrectable multibit error

Table I. — SYNDROME DECODING

© IC MASTER 1984

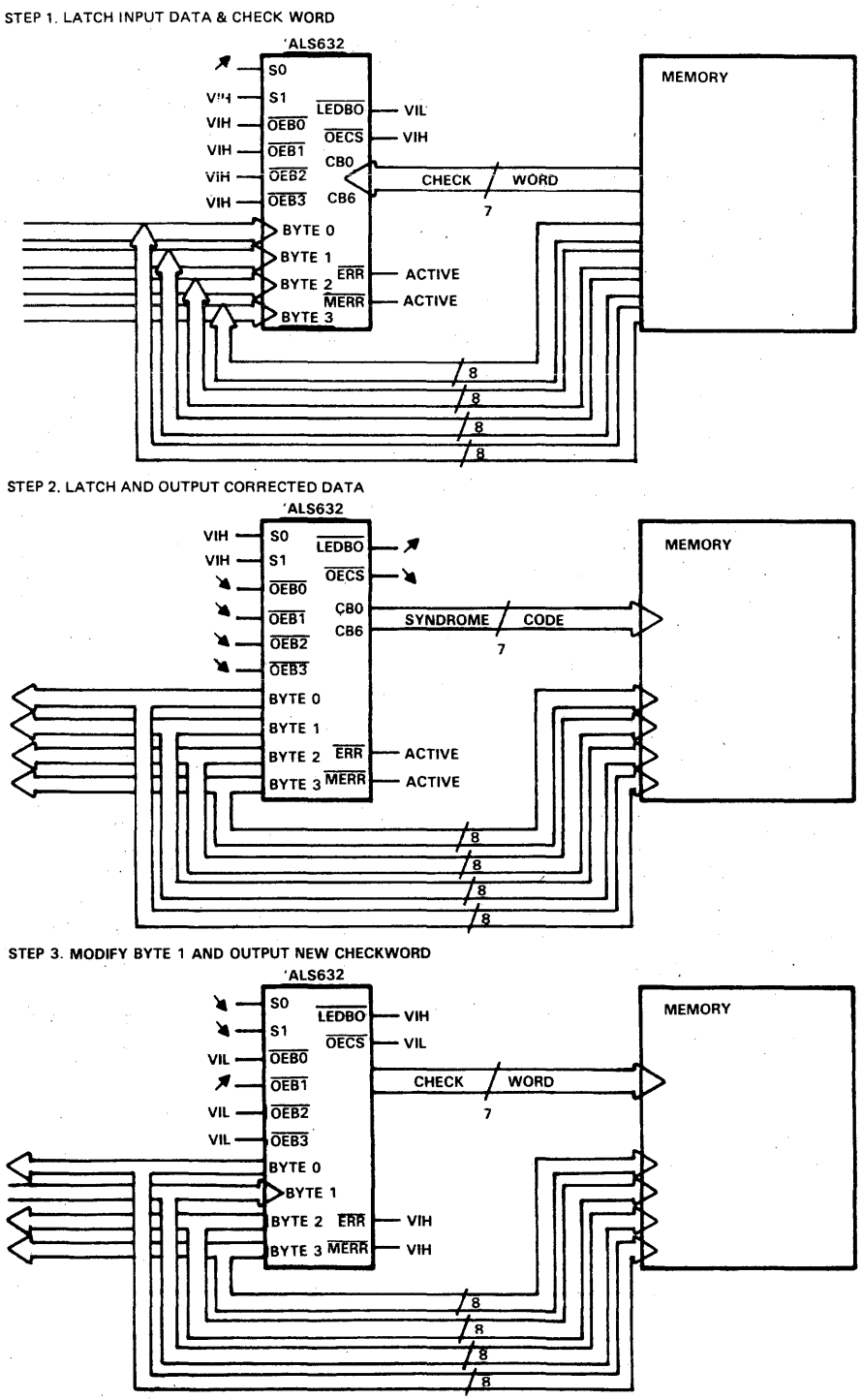

Figure 5. Read-Modify-Write Operation

to perform the read-flag-correct cycle as discussed before, and shown in Figure 4. This ensures that corrected data is used at the start of the modify-write operation. The 'ALS632 breaks the 32-bit data word into 4 byte's, of 8-bits each. $\overline{OEB0}$ through $\overline{OEB3}$ controls each byte respectively. Figure 5 shows the 3-step process for executing the read-modify-write operation on byte 1. To perform the modify-write operation, the corrected data must be latched in the output data latch. This is done by taking $\overline{LEDBO}$ from low to high. Upon completing this, modifying any byte or bytes is easily accomplished by taking the appropriate byte control $\overline{OEB0}$ through $\overline{OEB3}$ high.

This allows the user to place the modified byte or bytes back onto the data bus while retaining the other byte or bytes. An example of a read-modify-write for byte 0 is shown in the timing diagram of Figure 6. Since the check word will no longer be valid when performing the modify function, a new check word will have to be generated. This is easily done by taking S0 and S1 low.

Implementing Into System Architecture:

The major obstacle facing the design engineer who wishes to add error detection and correction to their system, is how to implement the EDAC. If minimizing the control circuitry is a major design goal, then the simplest operation can be obtained by using two EDAC's. This concept is shown in Figure 7. One EDAC would be dedicated to the write mode, while the other EDAC would be dedicated to the Read/Correct mode. Operation can be further simplified if the second EDAC always executes the correction cycle, regardless if a single bit error has occurred. In the case of no error, the EDAC will simply pass the data word unaltered.

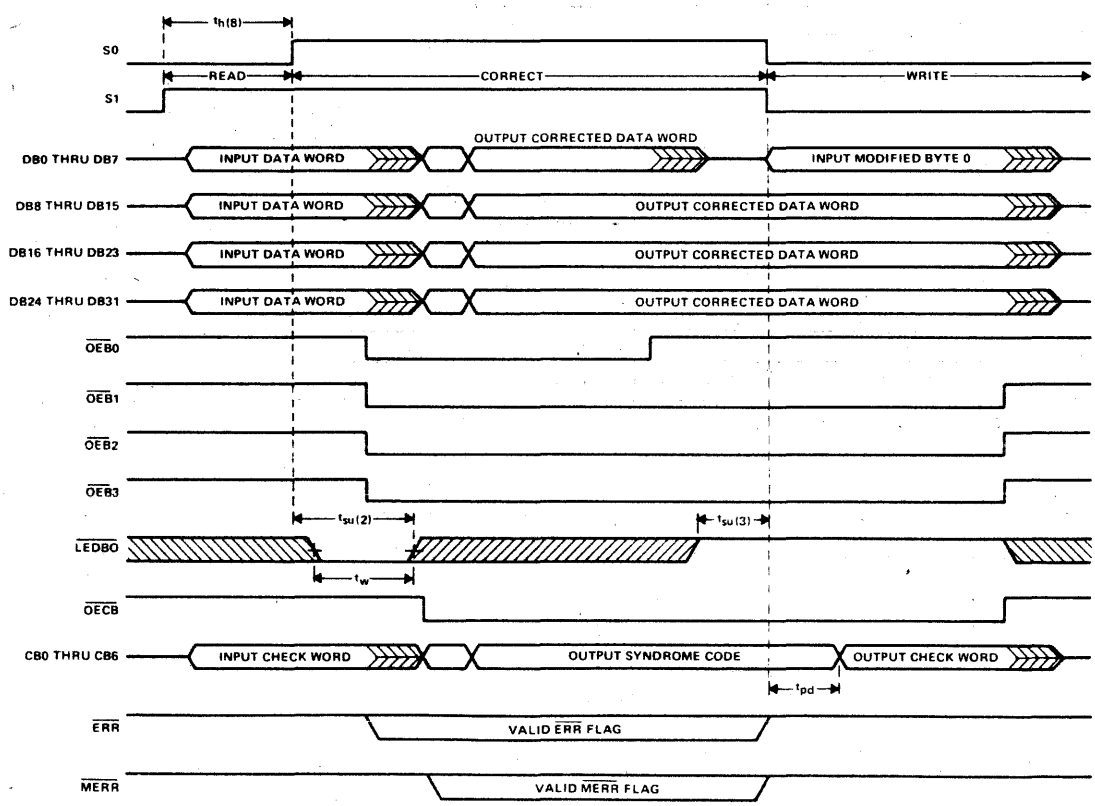

Figure 6. Read-Modify-Write Timing Diagram

TEXAS INSTRUMENTS
POST OFFICE BOX 225012 • DALLAS, TEXAS 75265

© IC MASTER 1984

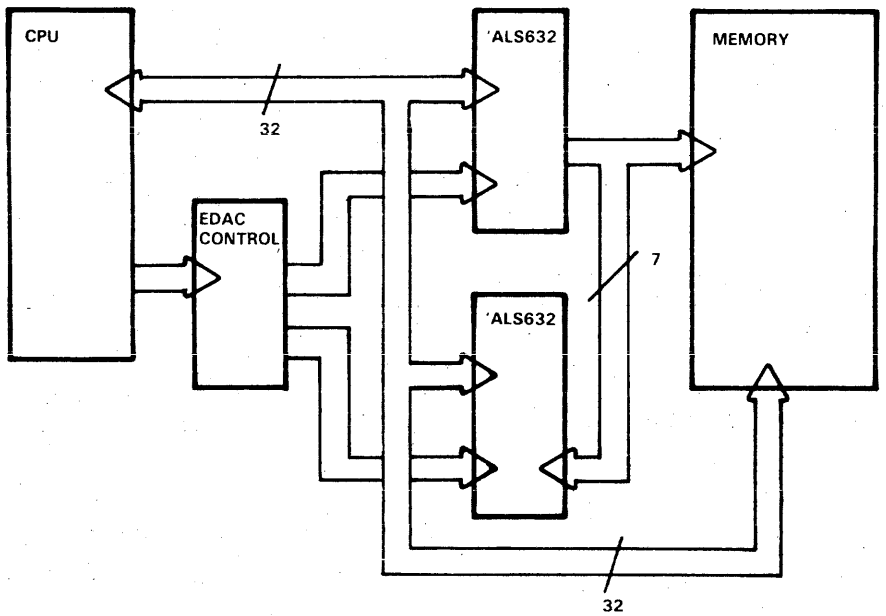

Figure 7. Two Device Operation

Figure 8 shows the architecture when using only one EDAC. The tradeoff will be in a more complicated EDAC control, but possible advantages are in reduced board size and EDAC costs. Due to speed considerations, the designer may want to only execute a correction cycle whenever an error occurs.

This can be easily accomplished by sampling the $\overline{ERR}$ and $\overline{MERR}$ output flags on the 'ALS632.

As discussed in the introduction, the 'ALS632 is capable of being used in 16-bit systems. This can also result in a reduction of memory size over conventional 16-bit EDACs employing 6 check bits. Figure 9 and 10 illustrate this concept. With the conventional 16-bit EDAC, eighty-eight 64K DRAMs would be required for the 22-bit x 256K memory array. It is easy to see that 27.3%, or 24 devices are required for storing the 6 check bits. If memory is restructured to hold two 16-bit data words side by side, the 'ALS632 can be used to reduce the overall memory size required. In the example shown, 10 fewer DRAM's would be required. With this type of architecture, four 'ALS646's, or similar devices, would be required for grouping two 16-bit data words.

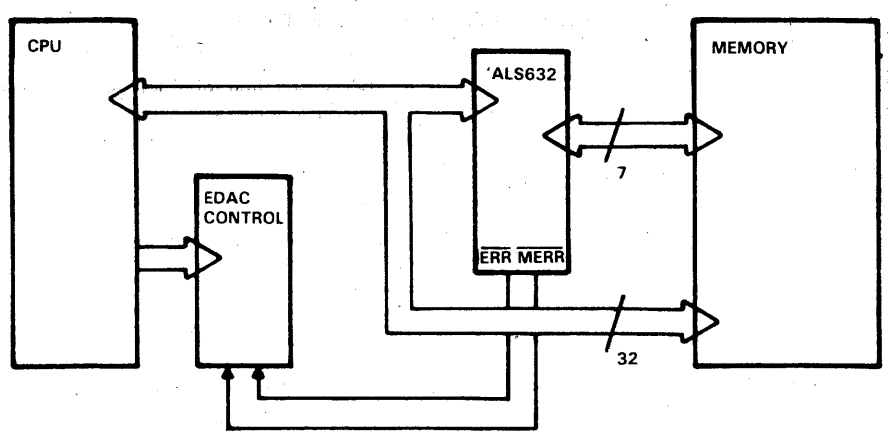

Figure 8. Single Device Operation

© IC MASTER 1984

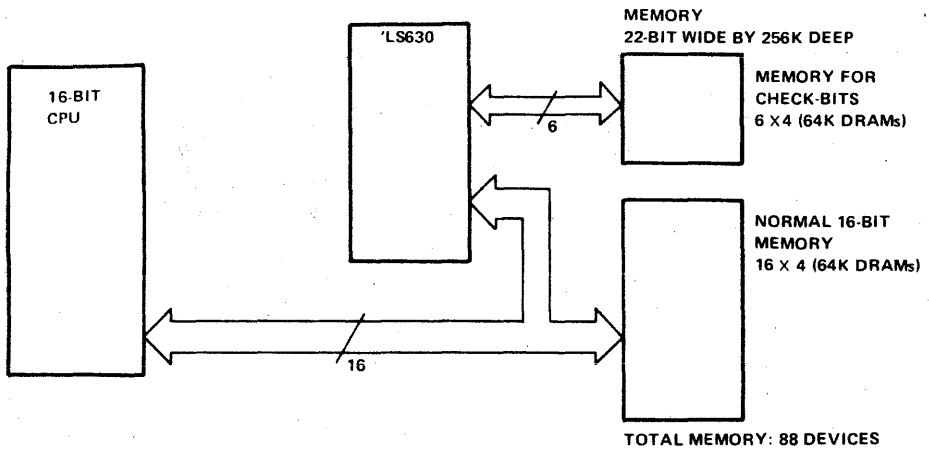

Figure 9. 16-Bit System using Conventional 16-Bit EDAC

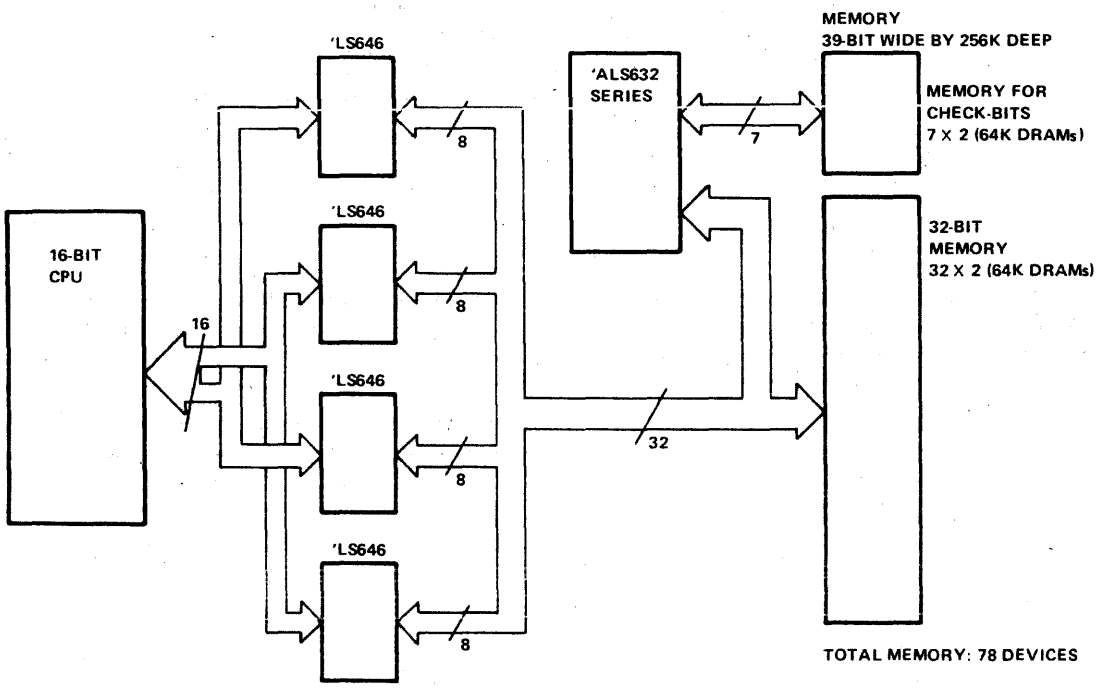

Figure 10. 16-Bit System using 32-Bit EDAC

DIAGNOSTIC CONTROL

The purpose of the diagnostic mode is to provide the user with the capability of easily detecting when the EDAC or memory is failing. In other words, checking the checker. There are several possibilities as to how a user might employ this feature, but Figure 11 shows a typical timing diagram of how diagnostics can be performed with this device. Generally, the user would first place the EDAC in the READ mode (S0=L, S1=H), then apply a valid check word and data word. A valid check word is one in which the user knows the associated data word. The user would next place the EDAC in the diagnostic mode by taking S0 high, and S1 low. This latches the valid checkword into its input latches, but leaves the data input latches transparent. This allows the user to apply various diagnostic data words either thru software or hardware control against the valid check word. A diagnostic data word is one in which either a single or double bit error exists. In either case, the error flags should respond. To verify that the valid checkword was latched properly, $\overline{\text{OECS}}$ can be taken low which causes it to be placed back onto the bus. The output data latch can be verified by taking $\overline{\text{LEDBO}}$ high and confirming the stored diagnostic data word is the same. This is made possible because error correction is disabled while in the diagnostic mode (S0=H, S1=L). Taking S1 high and $\overline{\text{LEDBO}}$ low will verify the EDAC will correct the data word. The error syndrome code can also be verified by taking OECS low.

TEXAS INSTRUMENTS
POST OFFICE BOX 225012 • DALLAS, TEXAS 75265

© IC MASTER 1984

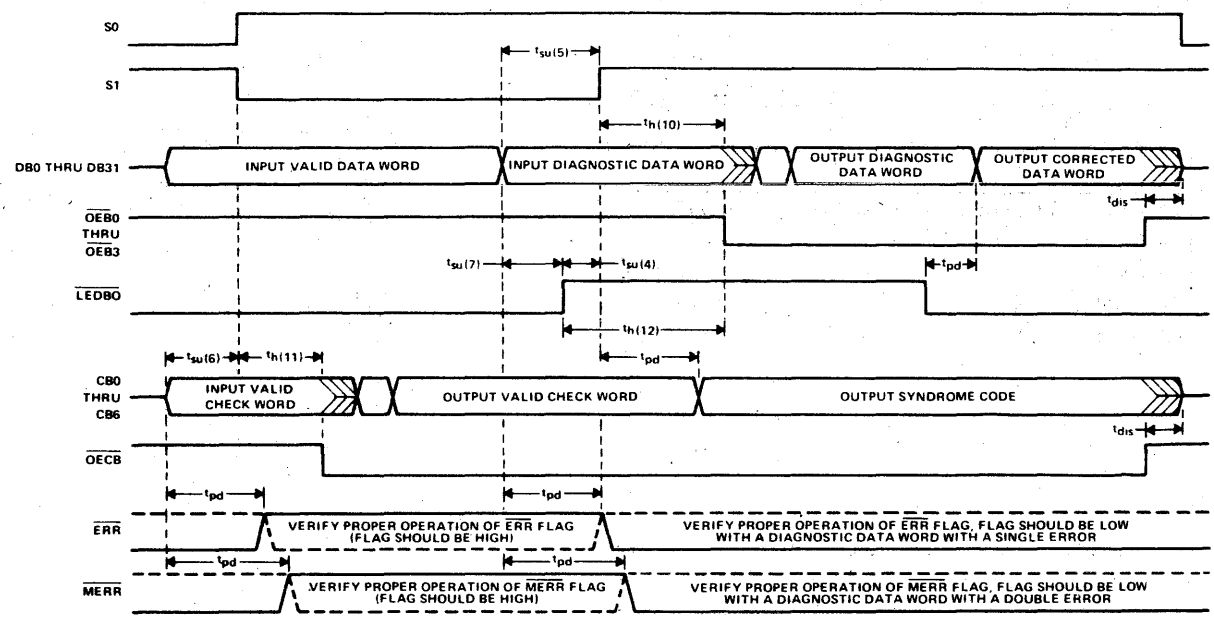

Figure 11. Diagnostic Mode Timing Diagram

CONCLUSION

The SN74ALS632 series of advanced Low Power Schottky EDAC's from TI offers the system designer very good switching performance (58 ns correction time), low power (250 mA, ICC) and an economical method of improving overall system reliability. Both open collector and three-state versions are available. Additional information can be obtained by contacting TI's Low Power Schottky Department.*

TYPES SN54ALS632 THRU SN54ALS635, SN74ALS632 THRU SN74ALS635
32-BIT PARALLEL ERROR DETECTION AND CORRECTION CIRCUITS

D2661, DECEMBER 1982—REVISED MAY 1983

- **Detects and Corrects Single-Bit Errors**
- **Detects and Flags Dual-Bit Errors**
- **Built-In Diagnostic Capability**
- **Fast Write and Read Cycle Processing Times**
- **Byte-Write Capability . . . 'ALS632 and 'ALS633**
- **Dependable Texas Instruments Quality and Reliability**

DEVICE	PACKAGE	BYTE-WRITE	OUTPUT
'ALS632	52-pin	yes	3-State
'ALS633	52-pin	yes	Open-Collector
'ALS634	48-pin	no	3-State
'ALS635	48-pin	no	Open-Collector

'ALS632, 'ALS633, . . . JD PACKAGE
(TOP VIEW)

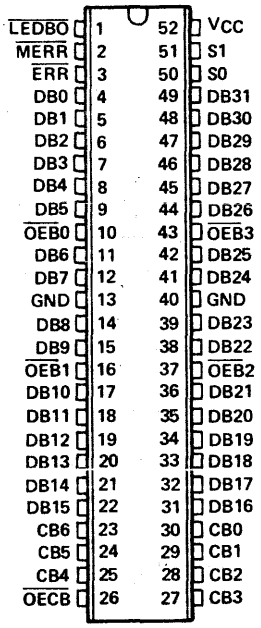

'ALS634, 'ALS635 . . . . JD PACKAGE
(TOP VIEW)

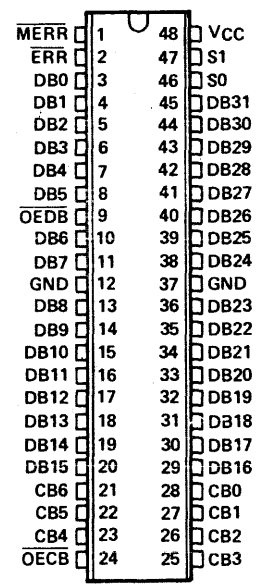

FOR CHIP CARRIER INFORMATION, CONTACT THE FACTORY

description

The 'ALS632 through 'ALS635 devices are 32-bit parallel error detection and correction circuits (EDACs) in 52-pin ('ALS632 and 'ALS633) or 48-pin ('ALS634 and 'ALS635), 600-mil packages. The EDACs use a modified Hamming code to generate a 7-bit check word from a 32-bit data word. This check word is stored along with the data word during the memory write cycle. During the memory read cycle, the 39-bit words from memory are processed by the EDACs to determine if errors have occurred in memory.

Single-bit errors in the 32-bit data word are flagged and corrected.

Single-bit errors in the 7-bit check word are flagged, and the CPU sends the EDAC through the correction cycle even though the 32-bit data word is not in error. The correction cycle will simply pass along the original 32-bit data word in this case and produce error syndrome bits to pinpoint the error-generating location.

Dual-bit errors are flagged but not corrected. These errors may occur in any two bits of the 39-bit word from memory (two errors in the 32-bit data word, two errors in the 7-bit check word, or one error in each word). The gross-error condition of all lows or all highs from memory will be detected. Otherwise, errors in three or more bits of the 39-bit word are beyond the capabilities of these devices to detect.

Read-modify-write (byte-control) operations can be performed with the 'ALS632 and 'ALS633 EDACs by using output latch enable, $\overline{\text{LEDBO}}$, and the individual $\overline{\text{OEB0}}$ thru $\overline{\text{OEB3}}$ byte control pins.

Diagnostics are performed on the EDACs by controls and internal paths that allow the user to read the contents of the DB and CB input latches. These will determine if the failure occurred in memory or in the EDAC.

© IC MASTER 1984

'ALS632, 'ALS633 logic diagram (positive logic)

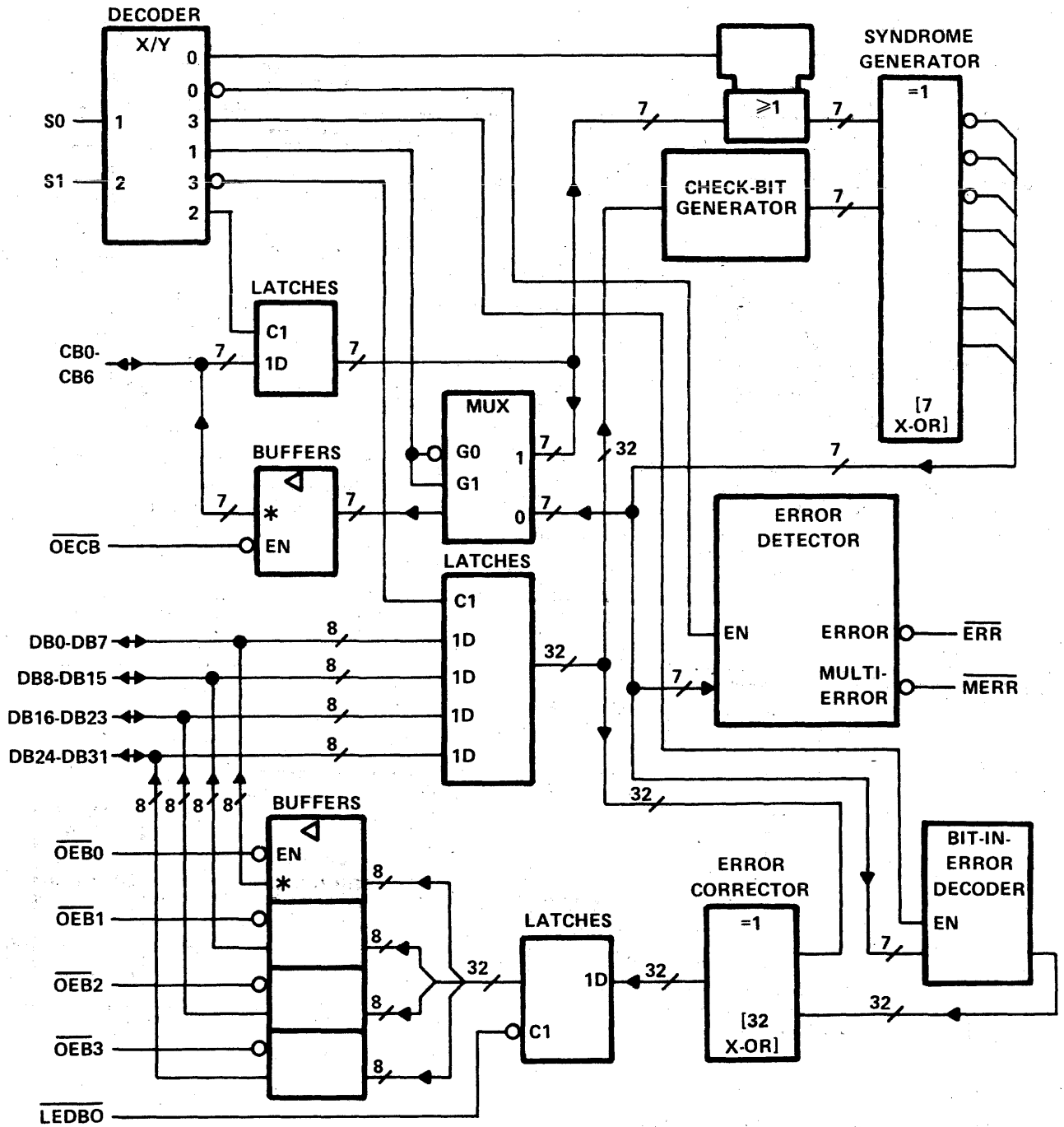

* 'ALS632 has 3-state (▽) check-bit and data outputs.
'ALS633 has open-collector (◇) check-bit and data outputs.

© IC MASTER 1984

'ALS634, 'ALS635 logic diagram (positive logic)

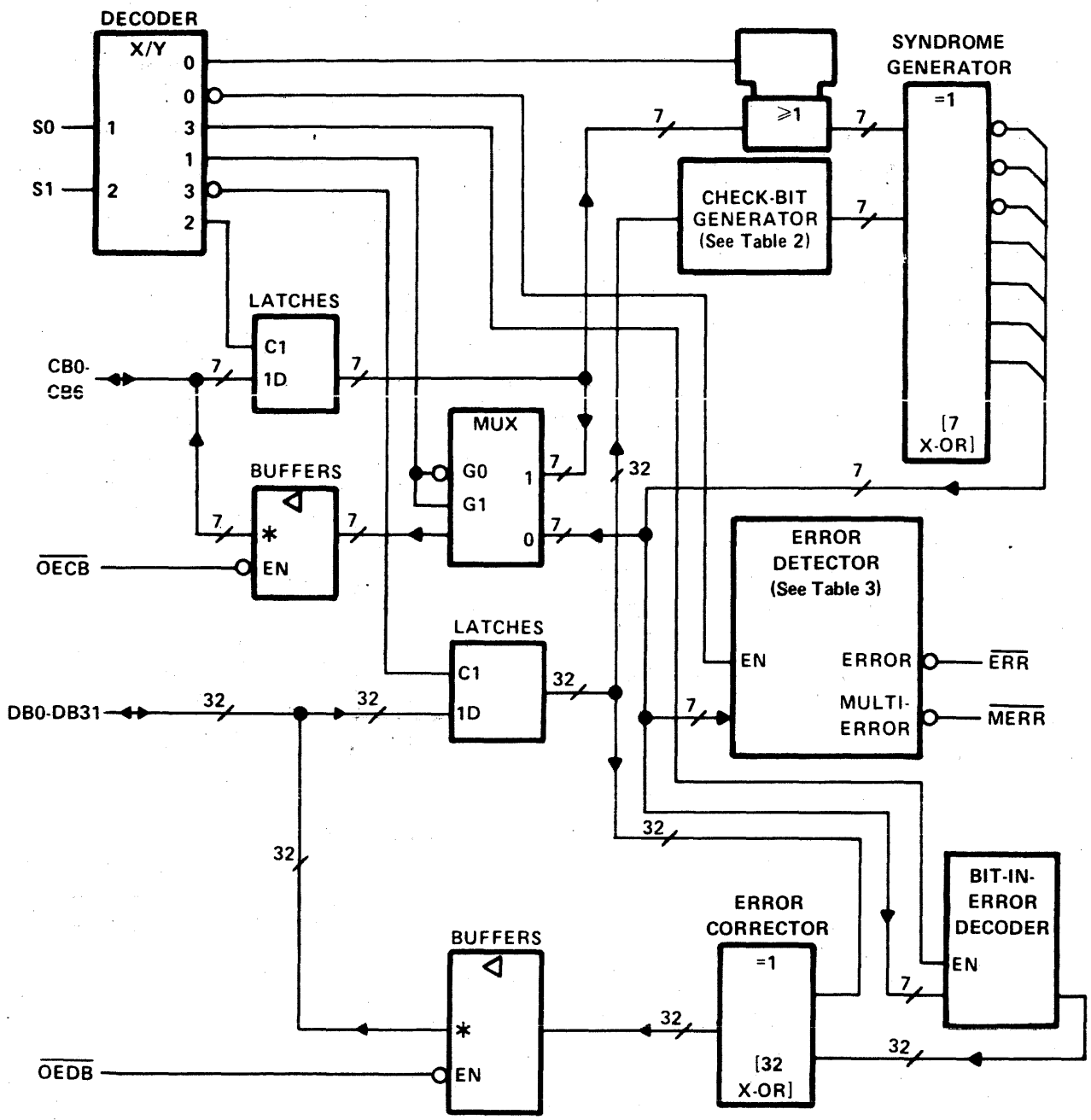

*'ALS634 has 3-state (▽) check-bit and data outputs.
'ALS635 has open-collector (◇) check-bit and data outputs.

TEXAS INSTRUMENTS
POST OFFICE BOX 225012 • DALLAS, TEXAS 75265

© IC MASTER 1984

SGDA001

Infrared Remote Control with TI Products

Application Report

TEXAS INSTRUMENTS

APPLICATION NOTE DIRECTORY

© IC MASTER 1984

Infrared Remote Control with TI Products

R. E. Smith

INTRODUCTION

Wireless remote control systems have been in use for several years with the major use being in consumer markets such as TV and toys.

Transmission modes most commonly used were ultrasonic sound waves or by radio frequency carrier signals. Both modes were plagued by interference and cross talk problems.

Another mode of transmission is via infrared light which offers immunity to the interference and cross talk problems present in the aforementioned systems. Since infrared operates with the same properties of light, it cannot pass through solids and thus there is no interference or cross talk between two systems operating in adjacent rooms. Neither electromagnetic nor electrostatic interference is a problem in IR transmission. While the number of transmitted functions is limited in ultrasonic systems due to a limited bandwidth, systems utilizing infrared transmission enjoy a wide bandwidth and a very large number of transmitted functions can be made available to the designer.

To date, the use of infrared transmission in remote control systems has been limited due to system cost being much more expensive than ultrasonic or RF modes. Until recently, there have been no integrated circuits designed to supply both the transmitter and receive functions required by infrared emitters and detectors.

This is a discussion of a family of integrated circuits which has been developed at Texas Instruments to meet the circuit functions as required by a transmitter and receiver used in infrared remote control systems.

Three transmitters are available, SN76881, SN76882 and SN76891. They offer from 30 to 128 separate control functions. Each function has its own 8-bit code. The SN76881 and SN76891 are supplied in a 16-pin dual-in-line plastic package and the SN76882 is supplied in a 24-pin dual-in-line plastic package.

The receiver is an SN76832 designed to receive the transmitted signal, process it and output the data in a serial format ready for decoding by an encoder/decoder such as a microprocessor chip.

TRANSMITTERS

SN76881, SN76882, SN76891 Transmitters

Transmitter operation is identical in all three. The differences are in the coding format and number of transmitted functions available.

The transmitters are keyboard controlled. A matrix type keyboard is used and codes generated by pressing the keys have been selected to minimize the on-current requirements. A low-code-to-space ratio and carrier duty cycle of 18% sets the on-current at about 6 mA typical.

Each key code consists of 8 bits. The first bit (start bit) is always a "one." The next three bits are the strobe bits followed by three code bits from the 5 to 3-bit encoder. The last bit is an expansion bit. It is always a "zero" on the SN76881 and a "one" on the SN76891. These devices offer 30 transmitted functions and operate from a 6 X 5 matrix keyboard.

The SN76882 offers up to 128 transmitted functions by externally controlling the eighth bit (expansion bit, #1) and using the seventh bit as expansion bit #2. Table I shows the available encoding options on the SN76882.

Table I. SN76882 Encoding Options

Functions	Keyboard	Expansion Bit(s)
64	8 X 8	Both Bits Open
64+64	8 X 8	Bit #1 Switched
32+32+32+32	8 X 4	Both Bits Switched

Table II lists the resulting codes for a 64 X 64 configuration. It must be noted that when the end code option is used, then the all "ones" code (FF) cannot be used as a command code. This is due to the power-down feature which, in the end-code option mode, causes an all "ones" end code to be transmitted prior to power-down.

If the end code is not selected, then an implied all "zero" code (no transmission) takes place. This can either be detected as a unique code in its own right or as an extended code spacing. In either case this indicates the key open condition and the circuit will power down, going into the standby mode.

TEXAS INSTRUMENTS
POST OFFICE BOX 225012 • DALLAS, TEXAS 75265

© IC MASTER 1984

Table II. Data Encoding (In Hexadecimal)

Input Lines	8	71	73	75	77	79	7B	7D	7F
	7	61	63	65	67	69	6B	6D	6F
	6	51	53	55	57	59	5B	5D	5F
	5	41	43	45	47	49	4B	4D	4F
	4	31	33	35	37	39	3B	3D	3F
	3	21	23	25	27	29	2B	2D	2F
	2	11	13	15	17	19	1B	1D	1F
	1	01	03	05	07	09	0B	0D	0F
Strobe Lines		a	b	c	d	e	f	g	h

64 Code Sequence — Expansion bit 1 = open (pin 14)

NOTE: The transmitted data consists of start bit and strobe line codes followed by input line code. Ex. 71 in above table is transmitted as 10001110.

Input Lines	8	F1	F3	F5	F7	F9	FB	FD	FF*
	7	E1	E3	E5	E7	E9	EB	ED	EF
	6	D1	D3	D5	D7	D9	DB	DD	DF
	5	C1	C3	C5	C7	C9	CB	CD	CF
	4	B1	B3	B5	B7	B9	BB	BD	BF
	3	A1	A3	A5	A7	A9	AB	AD	AF
	2	91	93	95	97	99	9B	9D	9F
	1	81	83	85	87	89	8B	8D	8F
Strobe Lines		a	b	c	d	e	f	g	h

+ 64 Code Sequence — Expansion bit 1 = grounded (pin 14)

*Not permitted if end code is used.

A master oscillator operating at frequencies up to 1 MHz controls the timing frequencies for the various functions of the transmitter as shown in the block diagram in Figure 1.

In the standby state, the transmitter is in a power-down mode with all strobe lines held high. Current requirement consists of leakage currents only and will be less than 5 μA. This negates the requirement of an off-on switch.

When a key is closed, the circuit powers up and a debounce period of about 9 ms follows. Also during this time the strobe and counters are reset. The keyboard is interrogated by the strobe counter and the code associated with the closed key is loaded into the parallel-in serial-out register.

Serial data output from the PISO register is applied to a gating-type modulator which also receives a carrier frequency generated by reducing the master oscillator frequency by a divide-by-11 circuit. Output from the gating modulator is bursts of carrier frequency voltage occurring for each "one" bit in the code as shown in Figure 2. This drives an NPN output transistor capable of driving an external transistor which can supply higher IR emitter current.

Following the first transmission period, there are three space cycles each equal to the transmission cycle period, during which time the 8-bit data is recirculated in the PISO register. This is followed by a second transmit cycle and three more-space cycles as shown in Figure 3. The resultant duty cycle for the carrier frequency is approximately 18%.

Following the initial loading of the 8-bit code into the PISO register, the status of the keyboard is ignored by the PISO until the last space cycle following the second transmit period. At this time the keyboard is again interrogated and if a key-down is detected, the new data (or same if same key is depressed) is loaded into the PISO register and the two transmit cycles are repeated. If, however, no key-down is detected, the circuit powers down going into the standby mode.

If a new key down occurs during the transmission cycle, it will be recognized and transmitted providing it is still down towards the end of the two transmit cycles when the keyboard is again being interrogated. In the case of two or more keys being down simultaneously, the highest order key on the highest order strobe line will be loaded. The exception to this is when the multiple key down is on the same KI line. This will result in no transmission due to wire-"AND"ing of the strobe pulses. For full keyboard press operation, a resistor, (47 kΩ typical) should be placed in each KS line.

Table III shows the relationship between the master oscillator frequency, transmit cycle periods, and data pulse periods. Oscillator frequency can be selected so as to take advantage of low-cost ceramic filters which are readily available. The two frequencies, shown in Table III, are 455 kHz and 910 kHz. By using the higher oscillator frequency, the total transmit time for each key-down is cut in half.

The timing diagram shown in Figure 4(a) shows the relationships between the major command signals which occur during a single transmit cycle. The debounce cycle occurs only once when the first key closure powers the circuit up. As long as keys are continually closed and no power-down occurs, there will be no more debounce period.

The load enable allows the PISO to accept the data from the KI and KS lines any time during this 25-ms period. The load pulse shown in Figure 4(a), is a short pulse which latches the 8-bit data into the PISO. It can occur anytime during the load enable period.

© IC MASTER 1984

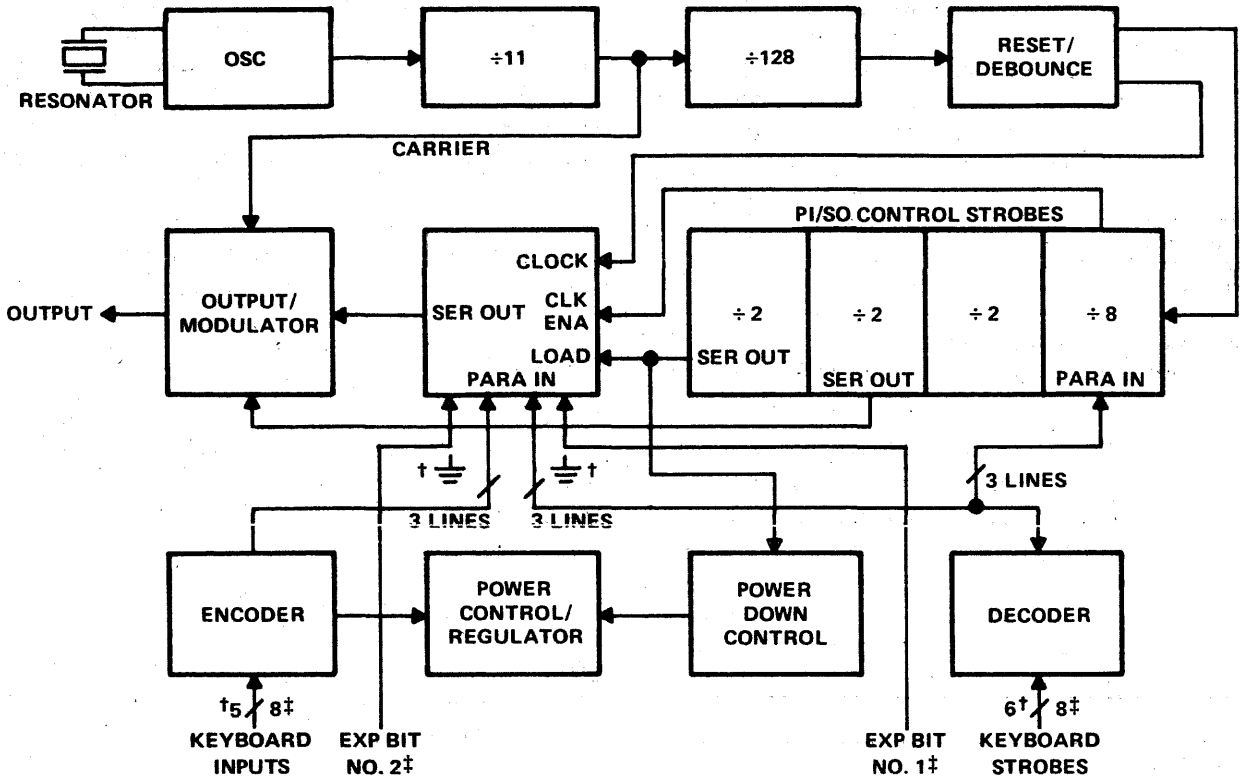

† = SN76881 or SN76891
‡ = SN76882 only.

Figure 1. Transmitter Block Diagram

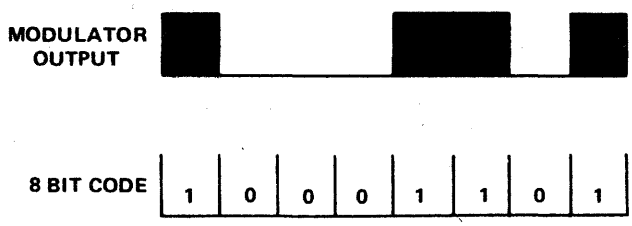

Figure 2. Modulator Output with Respect to Key Code

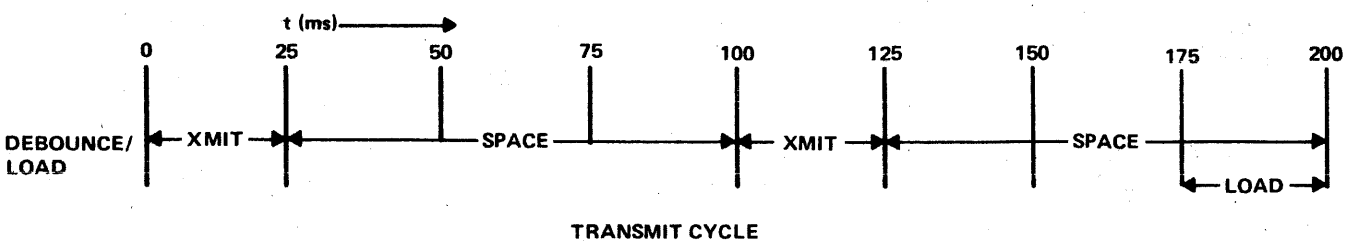

Figure 3. Transmit Cycle

TEXAS INSTRUMENTS
POST OFFICE BOX 225012 • DALLAS, TEXAS 75265

© IC MASTER 1984

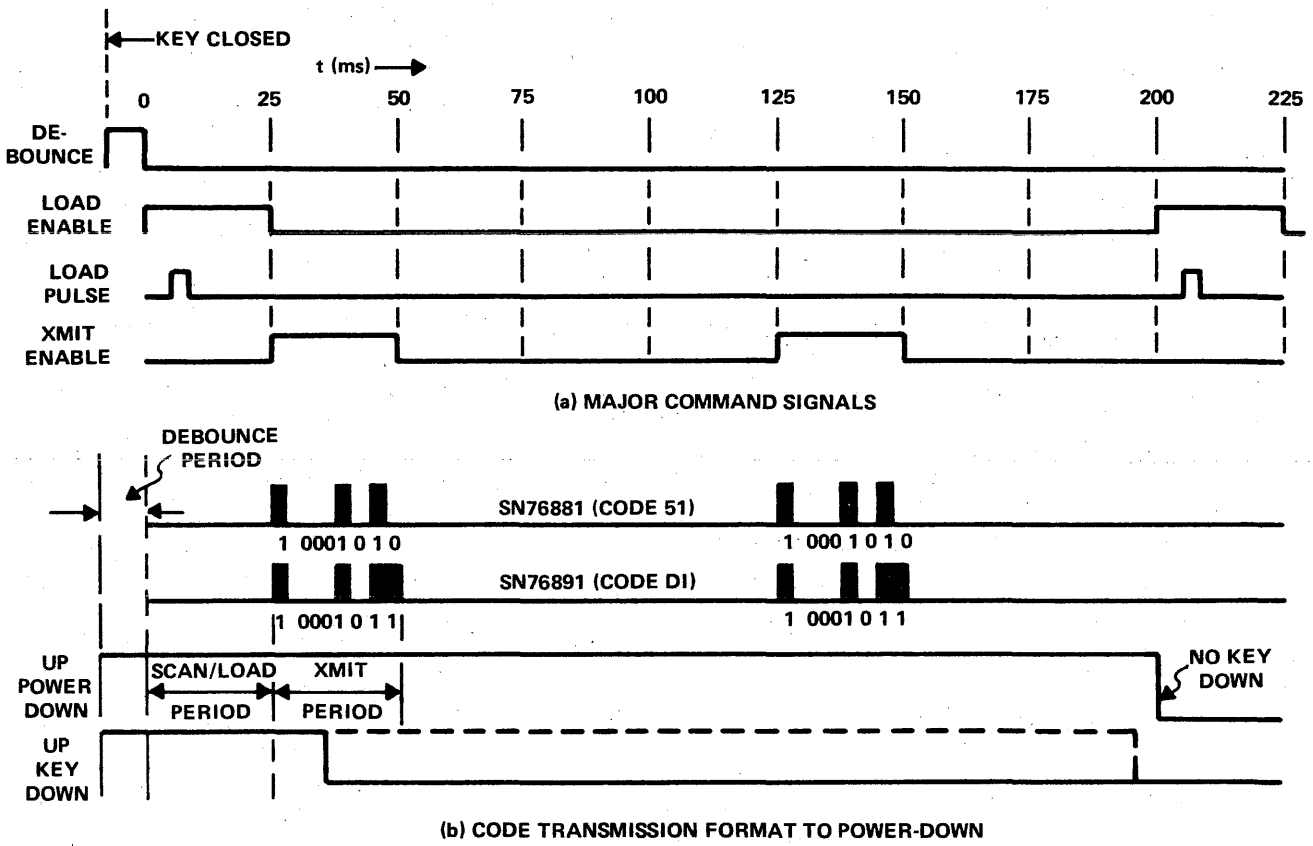

Figure 4. Transmit Cycle

Table III. Timing Relationships for 2 Oscillator Frequencies

Oscillator Frequency		455 kHz	910 kHz
Carrier Frequency	$\frac{f_{OSC}}{11}$	41.3 kHz	82.7 kHz
Debounce Period	$\frac{320 \pm 64}{f_{CAR}}$	6.2–9.29 ms	3.09–4.6 ms
Code Period (8 Bits)	$\frac{1029}{f_{CAR}}$	24.8 ms	12.4 ms
Bit Period	$\frac{128}{f_{CAR}}$	3.1 ms	1.55 ms
Min Period Between	$\frac{8192}{f_{CAR}}$	200 ms	100 ms

At the end of this period, the inputs of the PISO are no longer enabled until the last space cycle of the transmission period. The transmit enable follows the load enable and the data in the PISO is transmitted by the output, once immediately after the load period and again after three periods. Each space period is equal to one transmit period.

RECEIVER

SN76832 RECEIVER

The SN76832 replaces several discrete ICs and transistors which would be required to receive a digitally modulated infrared signal. It interfaces directly with an infrared detector such as the TIL100 and offers high input sensitivity with a large dynamic range of input signal. An open collector output allows direct interface with microprocessors such as the TMS1000 or TMS9900 series. An output enable pin offers controlled data bus sharing if necessary. Data out is serial format.

The SN76832 consists of a transimpedance amplifier, a differential amplifier, a demodulator section consisting of a voltage controlled oscillator, a divide-by-two frequency divider and a phase/amplitude demodulator, and an output section consisting of a Schmitt trigger driving the open collector output.

While the SN76832 was designed to work with the SN76881 transmitter series, it can be used with other encoding transmitters due to the versatility offered by designer control in choosing external components and input interfacing which control the major parameters of the receiver.

© IC MASTER 1984

Figure 5 shows a circuit diagram of an infrared receiver using an SN76832. The infrared diode detector, TIL100, is connected in the reverse bias mode to pin 11, the input of the transimpedance amplifier. A parallel tuned circuit consisting of an inductor and a capacitor is also connected to the input. This circuit is tuned to the transmitter carrier frequency and aids in reducing the effects of unwanted signals such as the infrared signals from incandescent or fluorescent lights. Signal voltages such as these can drive the transimpedance amplifier into saturation reducing receiver sensitivity to the transmitted signals.

In selecting the Q of the tuned circuit, there are performance trade-offs which must be considered. Ideally, a high impedance-high Q-network is desirable as this will supply a higher signal voltage for any given diode current. This, however, makes the circuit more sensitive to stray capacities and noise transient signals. A more important reason for having a low Q circuit is a characteristic which can occur in digital-type transmissions. This is "ringing" signals which occur as a result of high frequency voltages present during the transition periods which can generate erroneous data at the output.

The input impedance of the transimpedance amplifier is, by itself, high (typically around 225 kΩ) but when loaded down by the L/C circuit plus the addition of a parallel resistor, it will be lowered considerably.

The inductor, besides serving as a part of the parallel tuned circuit, combines with capacitor C3 to form a series tuned circuit at 60–120 Hz. This provides a low impedance path to ground for any signals emitted from incandescent or fluorescent lights. At the same time, the capacitor supplies ac decoupling in the feedback loop. If, for some reason, a tuned circuit is not desired, it will be necessary to connect a resistor of less than 100 kΩ between pins 11 and 13 since normally the bias current is supplied through the coil.

The transimpedance amplifier has a typical voltage gain of about 37 dB. At an input of about 50 mV, it will be driven into saturation. The output is brought out at pin 12 and externally coupled into the differential amplifier at pin 7.

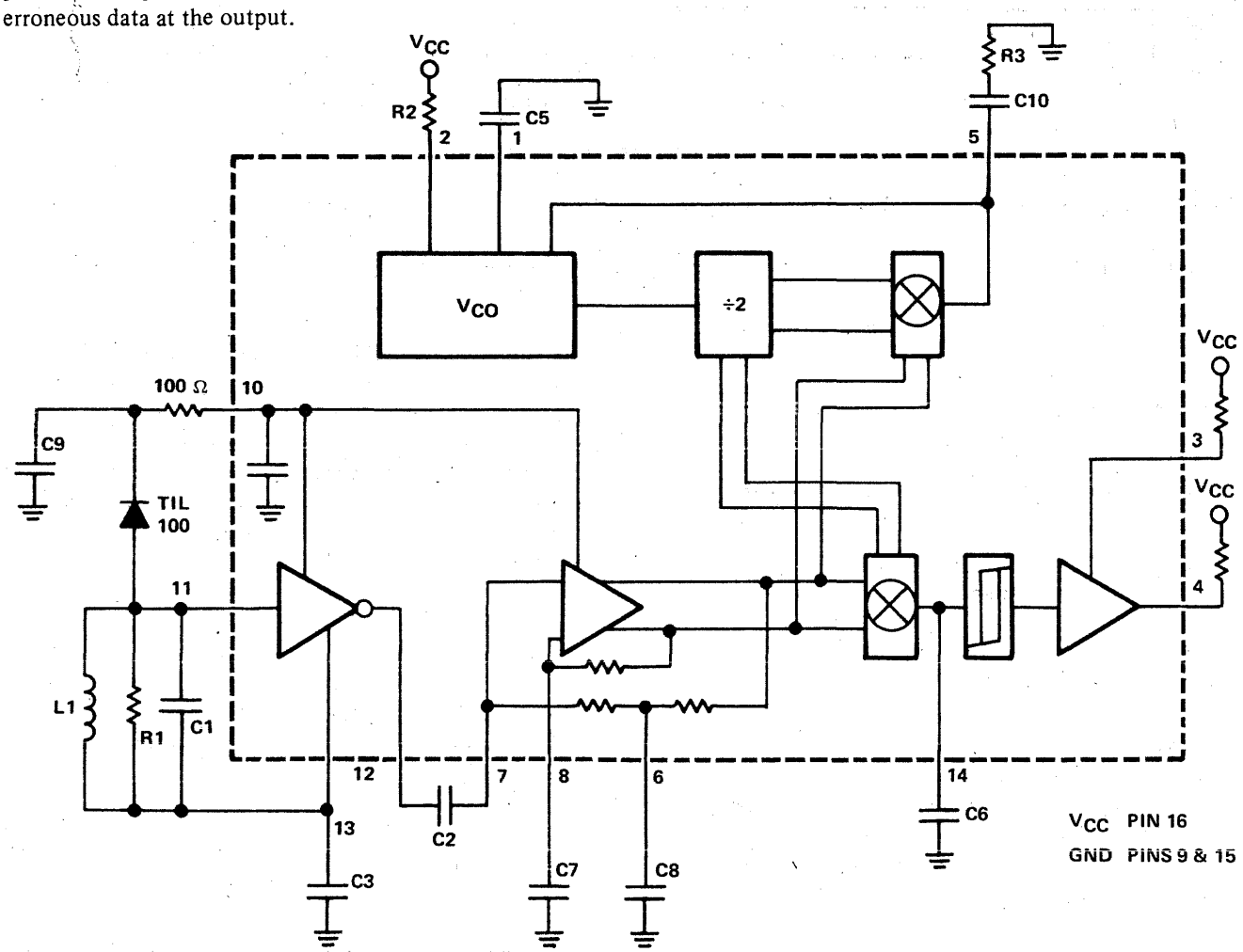

Figure 5. SN76832A Receiver Circuit

© IC MASTER 1984

The input impedance of the differential amplifier is about 2 kΩ. This, combined with the proper value of coupling capacitor, forms a high pass filter which can supply additional rejection to undesirable signals. The differential amplifier has a typical voltage gain of 50 dB. Both sections incorporate dc feedback to reduce the differential output offset voltage. AC decoupling is externally controlled at pins 6 and 8. The output of the differential amplifier is coupled directly into the demodulator.

The demodulator incorporates both phase and amplitude detection. It compares the incoming signal against an injected signal being the same frequency as the received carrier and generated internally. A voltage-controlled oscillator is set to operate at twice the transmitted carrier frequency. The V_{CO} frequency is externally set by the resistance on pin 2 and the capacitance on pin 1. The resistance should include a variable resistor which permits the user to accurately set the oscillator frequency. Under strong signal conditions this is not critical; however, under weak signal conditions, as is encountered when the transmitter is some distance from the receiver, it is desirable to be in the center of the capture range to prevent incorrect data appearing at the output. This manifests itself as a "breaking up" of the digital pulses into a series of short spikes. By carefully centering the oscillator frequency, maximum distance and optimum performance will be achieved.

Capture range is controlled in part, by the RC network in the loop filter at pin 5. In limiting the bandwidth, the capture range of the demodulator is reduced; however, the noise rejection is improved while the lock range holds at about ±50%.

The output of the demodulator appears at pin 14. A filter capacitor should be added to remove any lock transients and carrier related signals. Care should be taken in setting the value of this capacitor. The transition times of the serial data output will be increased by the time constant of C6 times R where R is the internal resistance of about 8 kΩ. Noise impulses appearing on the rise time of the data pulses can cause the Schmitt trigger to turn on at different times resulting in varying pulse widths of the output data. This may or may not impair system performance depending upon the encoder/decoder which is accepting the data from the receiver.

The Schmitt trigger drives an output amplifier which has an open collector output capable of interfacing directly with a microprocessor such as the TMS1000 or TMS9900 series. The output enable can be strobed for data bus time sharing or wired high through a resistor if time sharing is not required.

SYSTEM PERFORMANCE

Figure 6 shows a transmitter and receiver remote control system for use in an infrared transmission mode.

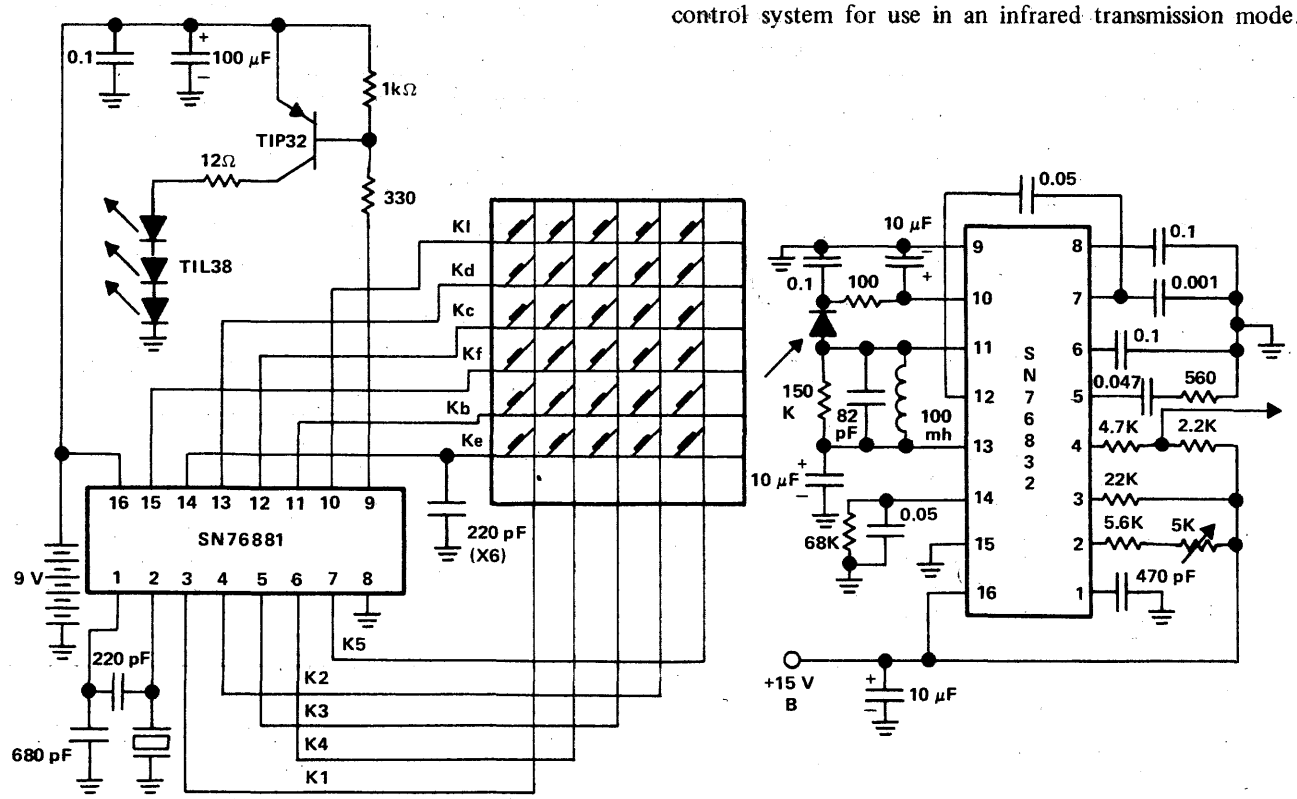

Figure 6. Functional Transmitter/Receiver Circuit

© IC MASTER 1984

The transmitter utilizes an SN76881. Operating from a 6 X 5 matrix keyboard, it offers up to 30 transmitted functions. A 220-pF capacitor is connected from each strobe line to ground (only one is shown). This will prevent high frequency components of the strobe pulse from feeding through in systems where the keyboard capacitance may be high. This could cause erroneous data transmissions during power-down periods. The 220-pF capacitors will filter the undesired high frequency components to ground.

The master oscillator frequency is 455 kHz using a low-cost 455 kHz ceramic filter between pins 1 and 2. Carrier frequency is 41.3 kHz with each data bit being 3.1 ms. The output drives a TIP31 which supplies approximately 240 mA PK current through the three TIL38 infrared diode emitters. The emitters are mounted in a triangular configuration. They could, however, be mounted in-line with similar results.

The transmitter has no off-on switch. In the quiescent state, battery drain is less than 5 μA. A 9-V battery, either a low-cost carbon-zinc type or an alkaline type is used. The alkaline will have better current delivering capability and will last considerably longer.

The receiver operates at a V_{CC} of 15 V. This is also critical to performance as is shown in Figure 7. Two transmitter output levels are represented, each showing the effects of receiver battery voltage on distance. One curve is with IR emitter current of 240 mA while the other one is with a current of 70 mA. The receiver will operate with a V_{CC} as low as 6 V but below this it becomes inoperative.

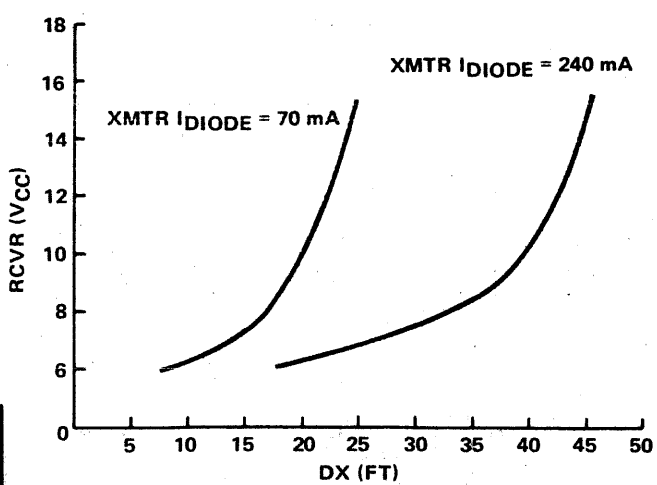

Figure 7. Infrared Performance Curves Distance vs IR Emitter Current

A 100-mH coil and 82-pF cap parallel tune to 41 kHz. Loaded Q is about 4. With a low Q circuit, the input noise due to a wide bandwidth will generate a voltage variation at the output of the demodulator. To reduce the effects of this on the Schmitt trigger, a resistor can be connected between pin 14 and ground. This becomes critical at weak signal conditions. The resistor should be as large as possible and never less than 33 kΩ.

The receiver V_{CO} frequency is 82.6 kHz. This is divided down to 41.3 kHz prior to being injected into the demodulator. The loop filter network component values used on pin 5 are not critical to a degree. They can be tailored to meet the performance required in the application.

In selecting the filter capacitance on pin 14, the data rate and the carrier frequency must be considered. To maintain fast transition times on the data pulses, the capacitance must have as high an impedance as possible at the transition period frequencies, yet it must offer a low impedance path to ground at the carrier frequency. Therefore the ratio between bit rate and carrier frequency should be as high as possible with a general "rule of thumb" being at least 80 to 100. To provide fast rise times on the output data pulses, the circuit bandwidth should be at least ten times the data rate. With a carrier frequency of 41 kHz, each bit is 3.1 ms long. The rise and fall times should not be more than 10% of this time or 0.3/ms for a minimum bandwidth of 3.23 kHz.

The major switching characteristics of the receiver, as a whole, are more dependent upon the external components than on the internal components and are governed by the normal parameters such as bandwidth, phase relationship between incoming signals and the internal V_{CO}, the time constants of the loop and output filter components, and the signal-to-noise ratio.

The output enable is tied to V_{CC} through a 22-kΩ resistor which sets the current to this pin well below the rated maximum of 1.0 mA.

Maximum recommended carrier frequency is about 100 kHz. At this frequency the total transition period will still be less than 10% of the cycle time. This frequency limit also takes into account the radiant rise time of the infrared emitters which is approximately 600 ns.

The system as shown in Figure 5 will operate at distances in excess of 40 feet. The major factors pertinent to achieving maximum distance are number of infrared emitters, peak current through the infrared emitters, and receiver sensitivity and gain.

It is desirable to operate the transmitter with battery current as low as possible, which means keeping the peak current through the IR diodes as low as possible. This will provide long battery life from low-cost batteries. From the data shown in Figure 7, it becomes obvious that increasing the current through the emitters will increase the distance.

TEXAS INSTRUMENTS
POST OFFICE BOX 225012 • DALLAS, TEXAS 75265

© IC MASTER 1984

The ability to "bounce" the signal off the walls, ceiling, etc., and still activate the system is dependent upon the same factors.

The actual efficiency of the IR system with respect to transmitted light vs captured light energy at the detector is poor. There is no "lens" or focusing action in either the TIL38 or TIL100 package. When observing the light transmitted from the three TIL38's through the use of an IR snooperscope, the pattern on a wall 20 feet from the transmitter will be a huge circle at least 25–30 feet in diameter. The percentage of this light output, captured by the infrared detector, which has a surface area of at most 100 mils square, is very small. This can be improved somewhat by using TIL39 IR emitters which have a narrower beam angle than the TIL38.

The use of a lens either at the transmitter to narrow the beam, or, at the receiver to increase the capture range, should be considered. In most cases the transmitter and receiver cases will be plastic. As part of the case, some lens formation could be added and the plastic impregnated with infrared dye. This can reduce the current requirement and improve battery life.

At the receiver end, a preamp can be used ahead of the SN76832, as shown in Figure 8. An additional 10–20 dB gain can be achieved, again increasing the operating range.

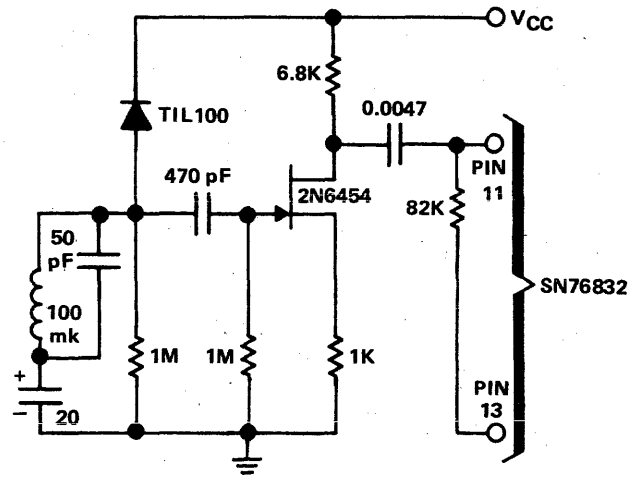

Figure 8. Infrared Input Circuit with Preamp

SUMMARY

By using the integrated circuits discussed in this report, infrared remote control systems can be built to supply the required performance in many applications and at a cost competitive to other systems, while eliminating some of the drawbacks inherent in other types of remote control systems. The system shown in Figure 6 will operate in noisy environments, such as a TV receiver, by enclosing the IR receiver in a metal cabinet.

© IC MASTER 1984

APPENDIX A

The following is a discussion on the calculations for receiver components.

Input Tuned Circuit

The inductance and capacitance are selected to tune at the received carrier frequency. To maintain a low circuit Q, and external resistance, R_{ext}, is added. The resistance is related to the resonant frequency by the equation:

$$f_R = \frac{\sqrt{\frac{1}{LC} - \left(\frac{1}{2\,CR}\right)^2}}{2\pi}$$

which is valid for low Q circuits where the resistance is an important factor.

The parallel resistance, R, is comprised of three resistor components: R_p, R_{in} and R_{ext} as shown in Figure A-1. R_p is the parallel equivalent resistance of R_s, the series resistance of the selected coil. R_{in} is the input impedance of the transimpedance amplifier present at pin 11, and R_{ext} is the additional external resistance required to set the Q of the tuned circuit. A Q of 3 was used and R was determined by the equation:

$$R = 2\pi fLQ$$

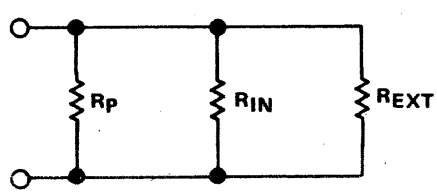

Figure A-1. Total Parallel Input Resistance

The inductor selected was a 100-mH coil having a resistance of 520 ohms. Of equal importance was its self-resonant frequency of 110 kHz. This must always be above the frequency at which the inductance is to be tuned. For a Q of 3, R was calculated to be 78 kΩ.

R_p is calculated from the equation:

$$R_p = R_s\,(1 + Q_L{}^2)$$

where R_s is the series resistance of the coil and Q_L is the Q of the coil, which was 50.

R_{ext} is determined by the equation:

$$R_{ext} = \frac{R_x\,R}{R_x - R}$$

where R_x is the parallel equivalent of the input resistance R_{in} and the parallel equivalent R_p of the coil as shown by the equation:

$$R_x = \frac{R_p\,R_{in}}{R_p + R_{in}}$$

The calculated R_{ext} was 134 kΩ. A 150-kΩ resistor will give satisfactory performance.

The parallel capacitance required to tune with the 100-mH inductance at 41.3 kHz is 150 pF. This capacitance includes the capacitive load of the infrared detector diode, the input capacitance of the SN76832, self-capacitance of the 100-mH coil and stray capacitance. Added to this is an external capacitor to meet the required value of 150 pF.

The diode capacity is 25 pF at a V_r of 7 V. The capacity of the coil is 21 pF. The input capacitance of the SN76832 is typically 6 pF and stray circuit capacitance was about 14 pF.

An external capacitance of 82 pF was added to resonate the coil at 41.3 kHz.

Receiver Oscillator Frequency Control

The resistance and capacitance required on pins 1 and 2 for setting the oscillator frequency can be derived from the equation:

$$f_{OSC} = 2\,f_{CAR} = \frac{1}{3.2\,RC}$$

In a system circuit where the transmitter output carrier frequency is 41.3 kHz, the receiver oscillator frequency then must be 82.6 kHz. With a 470-pF capacitance, the required resistance is approximately 8 kΩ. A 5.6-kΩ fixed resistor and a 5-kΩ potentiometer are used to obatin accurate frequency control for maximum performance.

Loop Filter Network

Pertinent data to this particular filter requirement only, is given here. For a detailed analysis of loop filter design, the design engineer can refer to *Phaselock Techniques* by Floyd M. Gardner. Also, both Motorola and National have published applications articles on this subject.

The loop filter design discussed here uses a second order loop.* The filter is composed of two resistors and a

*The SN76832 data sheet relates to a third-order loop filter; however, a second-order loop filter works fine and is simple to design.

© IC MASTER 1984

capacitor as shown in Figure A-2 where R1 is the internal source resistance and R2 and C are external components tied to pin 5 of the SN76852A.

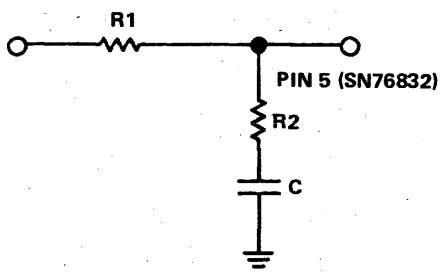

Figure A-2. RC Loop Filter Components

The Laplace transfer of this filter is:

$$H_{(S)} = \frac{K_O K_D\,(S\,\tau_2 + 1)/\tau_1 + \tau_2}{\dfrac{S^2 + S\,(1 + K_O K_D\,\tau_2)}{\tau_1 + \tau_2} + \dfrac{K_O K_D}{\tau_1 + \tau_2}} \qquad (1)$$

where K_O is the V_{CO} gain in rad/s/V; K_D is the phase detector gain in rad/V; τ_1 is the lower corner frequency time constant of the filter response and τ_2 is the upper corner frequency time constant as shown in Figure A-3.

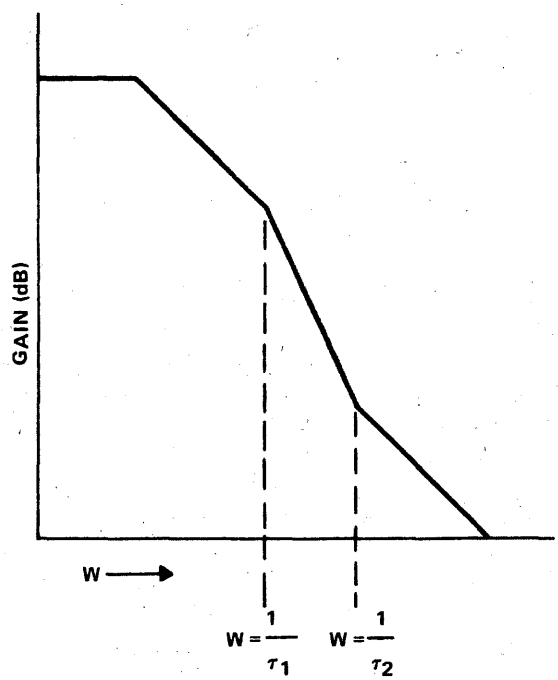

Figure A-3. Gain vs Frequency of Loop Filter

From this (based on a characteristic equation of the form $S_2 + 2\,\zeta\,\omega_n S + \omega_n^2$), the natural frequency of the loop, ωn, is shown to be:

$$\omega_n = \left[\frac{K_O K_D}{\tau_1 + \tau_2}\right]^{1/2}$$

and the clamping factor, ζ, is given as

$$\zeta = \tfrac{1}{2}\left[\frac{K_O K_D}{\tau_1 + \tau_2}\right]^{1/2}\left(\tau_2 + \frac{1}{K_O K_D}\right) \qquad (3)$$

From these equations, the time constants τ_1 and τ_2 can be found as

$$\tau_1 = \frac{K_L}{\omega_n^2} - \frac{2\,\zeta}{\omega_n} + \frac{1}{K_L} \qquad (4)$$

and

$$\tau_2 = \frac{2\,\zeta}{\omega_n} - \frac{1}{K_L} \qquad (5)$$

K_L is the total loop gain given as

$$K_L = \frac{K_O\,K_D}{N} \qquad (6)$$

where N is the frequency division number used in the loop.

τ_1 and τ_2 are related to the filter components of Figure A-2 as follows:

$$\tau_1 = R_1\,C \qquad (7)$$
$$\tau_2 = R_2\,C \qquad (8)$$

Lock-in time of the system is important. It is determined primarily by the step response, $\omega_n t$, and damping factor, ζ. t is the time in seconds and in this application, would be some desired percentage of the first transmitted bit. Figure A-4 shows the output frequency response versus $\omega_n t$ for different values of clamping factor.

This gives us a starting point for calculating the values of the loop filter components, R_2 and C. Selecting a damping factor of 0.707 and referring to Figure A-4, $\omega_n t$ is found to be approximately 4.5 at the point where it is at or close to the output frequency, or in lock. Let's assume we want to lock-in at approximately 20% of the first bit and since each bit will be 3.13 ms, t will be 0.64 ms. From this, we can find ω_n

$$\omega_n = \frac{4.5}{0.64\,(10^{-3})} = 7\,(10^{-3})$$

From the data sheet

$K_O = 1.7\,(10^5)$
$K_D = 1.0$
$N = 2$

$$K_L = \frac{1\,(1.7)\,(10^5)}{2} = 85\,(10^3)$$

© IC MASTER 1984

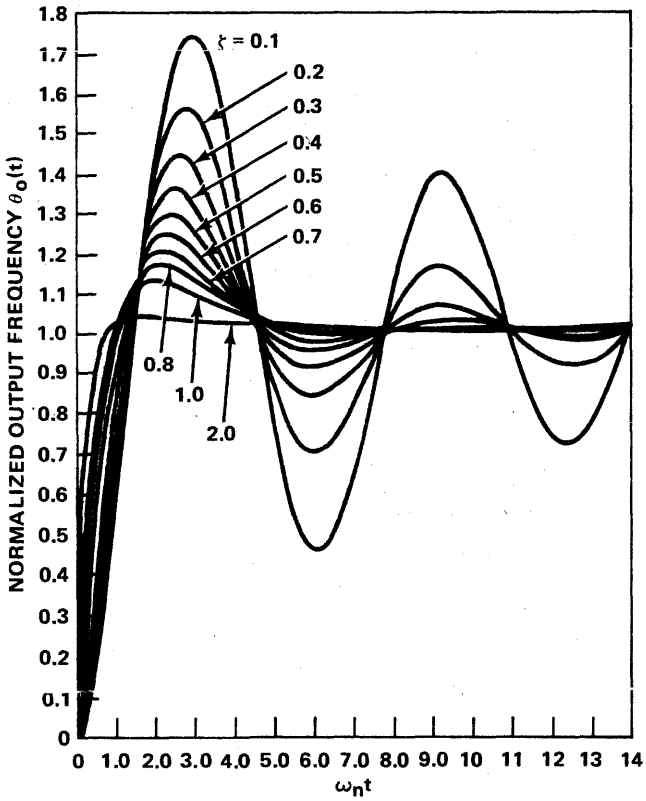

Figure A-4. Output Frequency Response vs Step Frequency Response

Using equations (4) and (5), τ_1 and τ_2 can be calculated.

$$\tau_1 = \frac{85(10^3)}{[7(10^3)]^2} - \frac{2(0.707)}{7(10^3)} + \frac{1}{85(10^3)} = 1.54\,(10^{-3})$$

$$\tau_2 = \frac{2(0.707)}{7(10^3)} = \frac{1}{85(10^3)} = 1.9(10^{-4})$$

From these values R_2 and C are found. R_1 is given as 3.3 (10^3) in the SN76832 data sheet. Using Eq. (7), C can be found.

$$C = \frac{1.54(10^{-3})}{3.3(10^3)} = 0.47(10^6)$$

and using Eq. (8), the series resistance R_2 is

$$R_2 = \frac{1.9(10^{-4})}{0.47(10^{-6})} = 400$$

In the receiver circuit, the actual value used is 560 Ω.

APPENDIX B

The circuit design evaluations for this report were done using TIL38 infrared emitting diodes. Since then Texas Instruments Optoelectronics department has announced two new infrared emitting diode types – TIL905 and TIL906. These new types are gallium aluminum arsenide types and offer improved efficiency over that of the TIL38 and TIL39 with more light output for a given forward diode current.

The difference between the TIL905 and TIL906, as with the TIL38 and TIL39 is in the emission beam angle between the half intensity points. This angle is 50°C for the TIL905 and 20° for the TIL906.

The use of these new device types provides the design engineer with some desirable options.

The three TIL38s used in the circuit of Figure 6 were replaced with three TIL906s. At a forward diode current of 140 mA peak, the system provided good performance at a distance of 50 feet with extended battery life. If longer battery life is not required, the three TIL38s can be replaced by two TIL906s operating with a forward diode current of 240 mA. The system performed satisfactorily at distances up to 50 feet.

There is also another infrared diode detector available from TI. This is the TIL413. It features a "domed lens" face which increases the sensitivity of the device to infrared light striking the face from angles up to 60°. Beyond 60° the sensitivity falls off rapidly as compared to the TIL100 which has a 120° angle.

The TIL413 offers high sensitivity for optimum performance at a lower cost to the designer.

Texas Instruments reserves the right to make changes at any time in order to improve design and to supply the best product possible.

Texas Instruments assumes no responsibility for infringement of patents or rights of others based on Texas Instruments applications assistance or product specifications, since TI does not possess full access to data concerning the use or applications of customer's products. TI also assumes no responsibility for customer product designs.

TEXAS INSTRUMENTS
POST OFFICE BOX 225012 • DALLAS, TEXAS 75265

© IC MASTER 1984

SSYA001

Post Molded Leaded Chip Carrier

Application Report

TEXAS INSTRUMENTS

© IC MASTER 1984

Post Molded Leaded Chip Carrier

W. T. Greer

INTRODUCTION

The post molded leaded chip carrier (PLCC) was developed by Texas Instruments in 1980 to improve the packing density of ICs on printed circuit (PC) boards and overcome some of the size constraints normally caused by dual-in-line (DIP) packages. The PLCC was also designed to be used under the same environmental conditions as the DIP without any reliability degradation.

The PLCC occupies approximately 40% to 60% of the PC boardsarea of an equivalent DIP, and requires no through holes (surface mount), therefore, lower cost on PC boards. Unlike some surface mounted packages, TI's PLCC requires no special PC board material considerations. The lead frame expands or contracts enough to maintain solder joint integrity.

Digital, Linear, and MOS devices will be offered in 18, 20, 28, 44, 68, and 84-pin packages.

Recommended PC Board Attachment Method

Although several methods have been investigated to attach PLCCs to PC boards, vapor phase soldering has been the most successful to date. This method of attachment is based upon immersing the PC board/PLCC combination into the vapor of a boiling inert fluid, such as fluorinert® FC70 manufactured by the 3M Company. Often, the PC board will have had solder paste screen printed on the PLCC footprint of the PC board. The paste is adhesive enough to hold the PLCC in position on the PC board until the solder paste is reflowed and soldering occurs. Due to the strong surface adhesion between the reflowed solder, PC board lands, and PLCC, self positioning of the PLCC to the PC board lands will occur.

After the PLCC is positioned on the PC board (normally by a template), the complete assembly is placed in a 215°C FC70 vapor. This technique creates an even heat transfer medium which reflows all of the solder at one time. This method is fast and very clean.

Generally, a chlorofluorocarbon secondary vapor cover is maintained above the primary vapor zone to prevent loss of the fluorinert®. Figure 1 shows a typical vapor phase system.

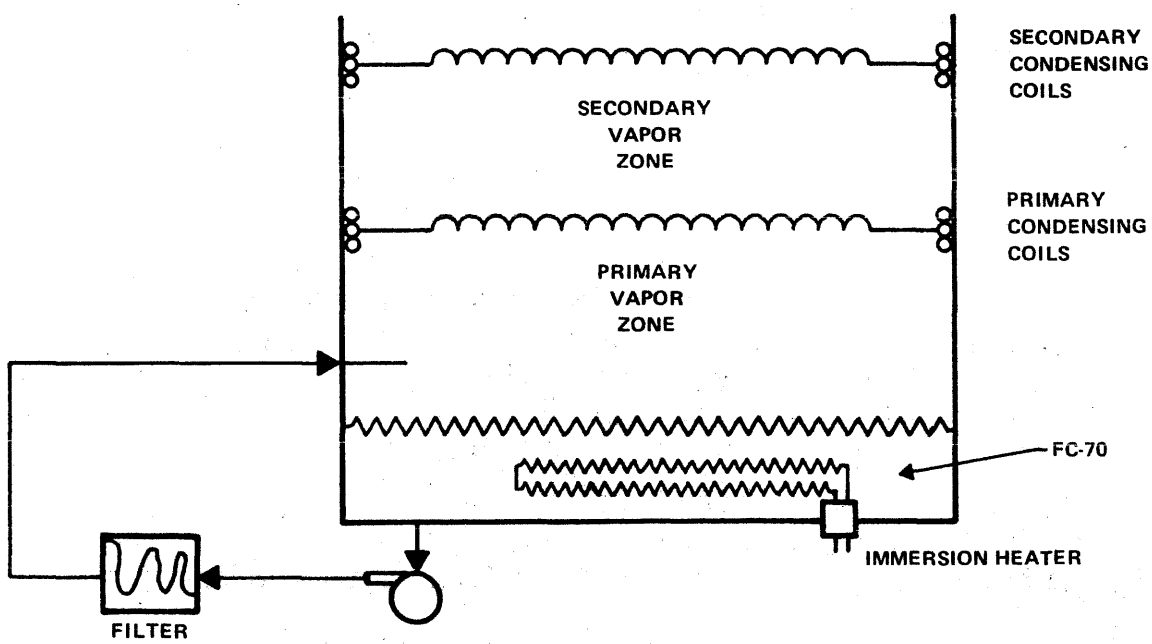

Figure 1. Vapor Phase Soldering

TEXAS INSTRUMENTS
POST OFFICE BOX 225012 • DALLAS, TEXAS 75265

© IC MASTER 1984

Dwell time in the VPS system will vary from 15 to 30 seconds for various PC board assemblies. PLCC loaded PC boards can be placed in the vapor phase system vertically to increase throughput.

A filtration system is normally an integral part of most vapor phase systems to remove solder flux and other impurities which may be washed off of the PC board while in the vapor.

Vapor phase systems are commercially available from several manufacturers.

OTHER METHODS INVESTIGATED

Wave Soldering

Wave soldering has been successfully used to mount PLCC's on PC boards. The PLCC's and other surface mounted components are first glued to their appropriate footprint on the PC board. The PC board assembly is then moved through the wave with the component side immersed in the wave. If the proper speed and angle of attack is used, one can successfully solder PLCC's on both sides of the PC board. This method of attachment is being thoroughly investigated because of the many flow solder systems in use today by most PC board/DIP manufacturer. Figure 2 shows a typical system, PC board/PLCC interface.

Hot Tip Method

In 1981, Texas Instruments developed a hot tip method of attaching PLCCs to PC boards. This method (Figure 3) utilizes a metal tip which is electrically heated to approximately 270°C. The chip carrier is picked up and held in place by vacuum. Solder flux is dispensed onto the chip carrier landing area on the PC board. The hot tip/chip carrier combination is brought in contact with the pre-fluxed, pretinned PC board. After the solder is reflowed by the hot tip, the PLCC is pushed into the flowed solder and held there for a short period of time until the tip can be removed and the solder solidified. This complete process takes approximately two seconds per device.

The two methods (wave soldering, hot tip) just described can be used to mount a mixture of through the board and surface mounted devices. The popular aspect of each method described will totally depend on each unique application.

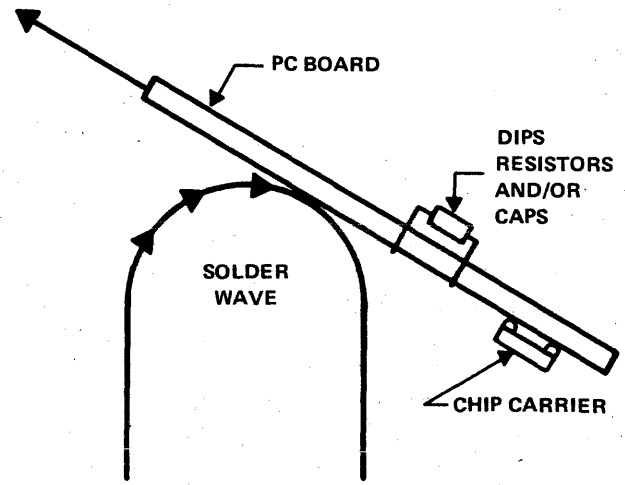

Figure 2. Flow Solder System

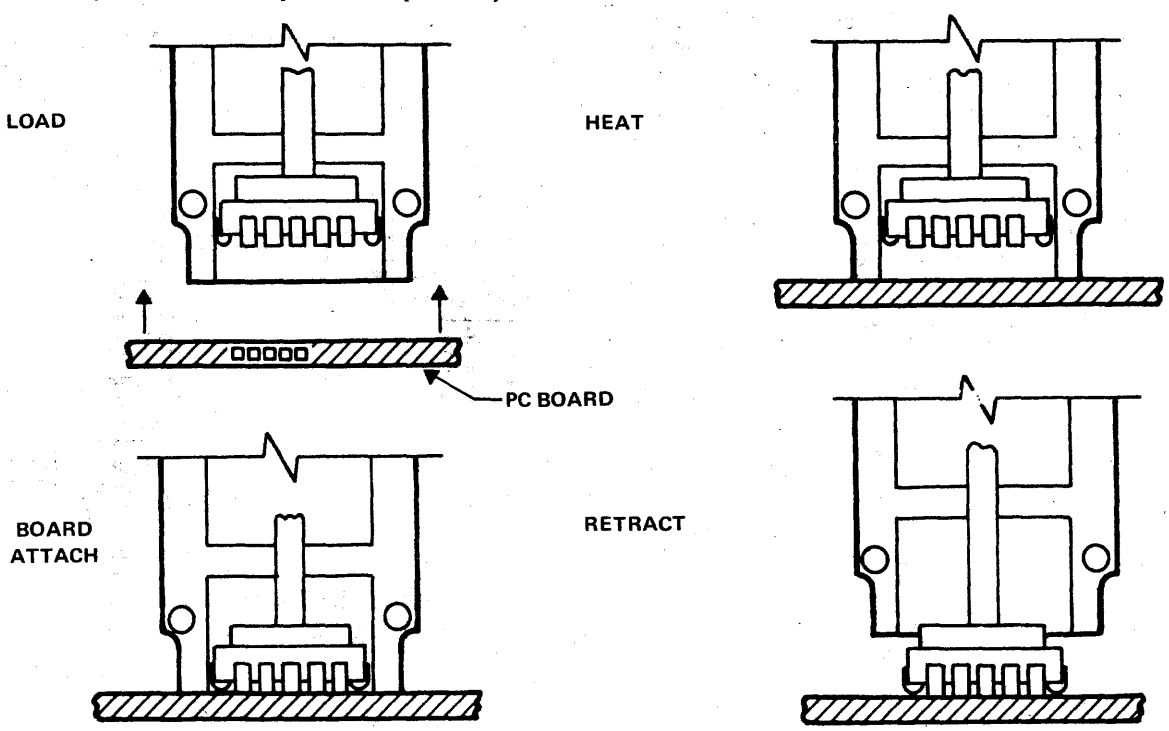

Figure 3. Hot Tip Method

© IC MASTER 1984

PACKAGE OUTLINE

The following information applies to each package unless otherwise specified on individual package outline drawings. (See Figure 4.)

General

1. Each of the chip carrier packages consist of a circuit mounted on a lead frame and encapsulated within an an electrically nonconductive plastic compound. The compound withstands soldering temperatures with no deformation, and circuit performance characteristics remain stable when the devices are operated in high humidity conditions.
2. These packages are intended for surface mounting on solder lands with 0.050-inch centers. The leads require no additional cleaning or processing when used in soldered assembly.
3. All dimensions shown are metric units (millimeters), with english units (inches) shown parenthetically. Inch dimensions govern.
4. Lead spacing shall be measured within the zones specified in Figure 4.
5. Tolerances are noncumulative.
6. Lead material CD-155, T60 (Copper Alloy).
7. Round hole in Top of package denotes pin 1.

Table I. Thermal Properties, of Plastic Chip Carriers

No. of Leads	Package Designation	θJA (°C/N)	θJC (°C/W)
20	FN	113.6	37.1
28	FN	76.8	32.2
44	FN	68.0	20.3
68	FN	45.7	11.4

NO. OF TERMINALS	A MIN	A MAX	B MIN	B MAX	C MIN	C MAX
20	9,35 (0.368)	10,03 (0.395)	8,89 (0.350)	9,04 (0.356)	8,08 (0.318)	8,38 (0.330)
28	11,89 (0.468)	12,57 (0.495)	11,43 (0.450)	11,58 (0.456)	10,62 (0.418)	10,92 (0.430)
44	16,97 (0.668)	17,65 (0.695)	16,51 (0.650)	16,66 (0.656)	15,70 (0.618)	16,00 (0.630)
52	19,51 (0.768)	20.19 (0.795)	19,05 (0.750)	19,20 (0.756)	18,24 (0.718)	18,54 (0.730)
68	24,59 (0.968)	25,27 (0.995)	24.13 (0.950)	24,28 (0.956)	23,32 (0.918)	23,62 (0.930)

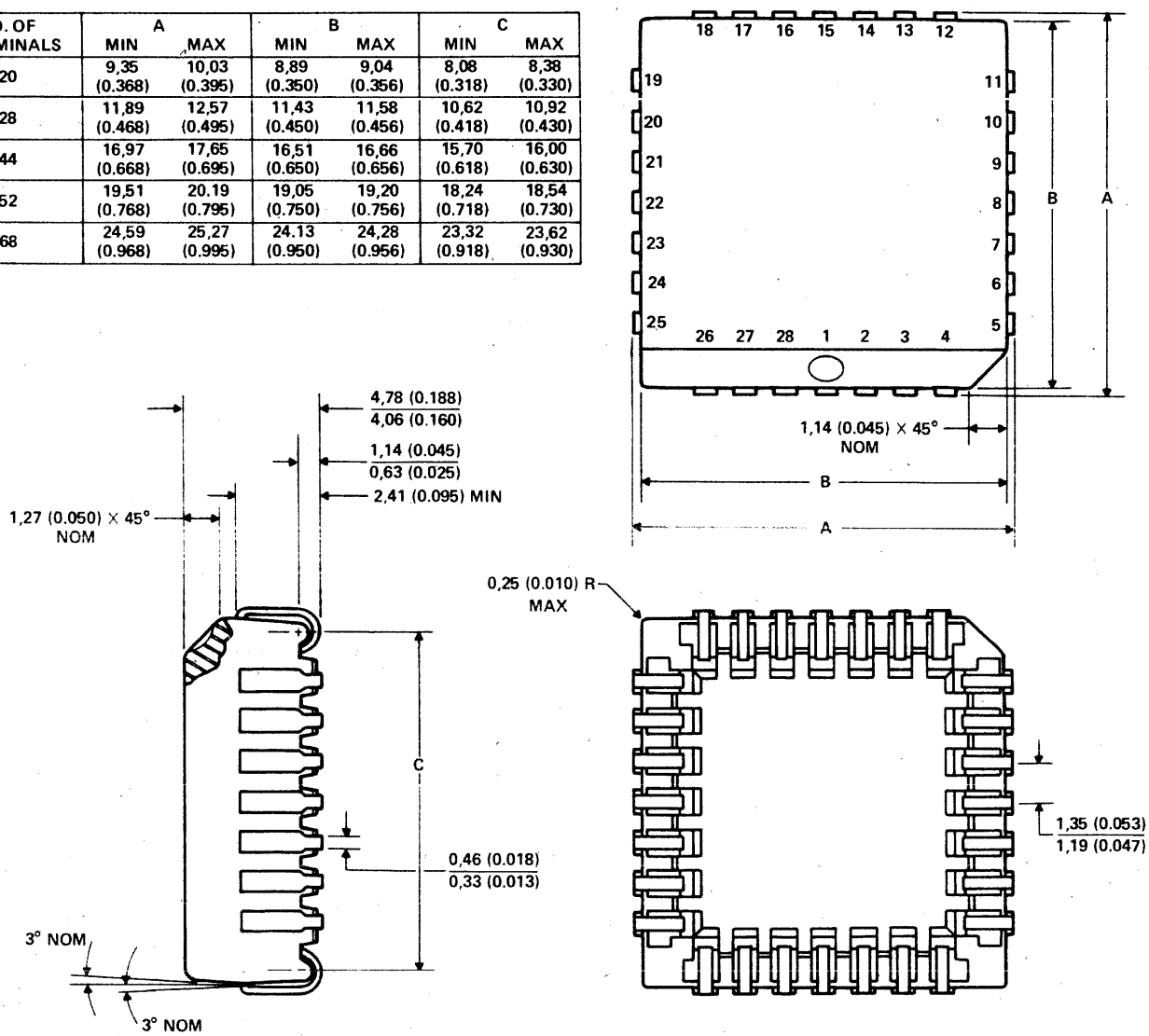

ALL DIMENSIONS ARE IN MILLIMETERS AND PARENTHETICALLY IN INCHES

Figure 4. FN Plastic Chip Carrier Package

© IC MASTER 1984

Plastic Chip Carrier Temperature Ratings

Operating Temperature Range	−40°C to 85°C
Storage Temperature	−65°C to 150°C
Power Dissipation	See Table I

Power Dissipation

The thermal properties of the plastic chip carriers are about the same as a normal DIP with the same I/O. The copper alloy lead frame and the short distance from the die to the PC board interface readily conducts away heat from the source. Therefore, the user pays no penalty in thermal properties when he switches from a DIP populated board to a chip carrier populated board.

General Comments

1. The plastic chip carriers described in this report meet the requirements fof JEDEC Committee JCB-82-25 Standard.
2. The die used in the PLCC is the same die used to produce devices in dual-in-line packages.
3. The electrical switching performance of devices in PLCCs is slightly improved over devices manufactured in DIPs due to a reduction in lead inductance. All other dc parameters are standard.
4. All manufacturing techniques used to produce PLCC are an emulation of the DIP process which has proven to produce high quality reliable devices.
5. The plastic chip carrier is denoted by a "FN" suffix to the device number (for example 74ALS00FN).
6. Devices in plastic chip carriers can easily be tested in volume by using any authomatic tester and a Delta Design 02 chip carrier handler. Delta Design is a company located in San Diego, California.
7. All devices manufactured in the PLCC are pinned out to conform to JEDEC Committee pin outs.
8. Pin outs of digital devices can be found in the 1983 ALS/AS Data Book.
9. Devices can be purchased from TI in the PLCC described in high-volume quantities.
10. PC boards of any construction can be used with the PLCC.
11. Sockets for the chip carriers are available from AMP Corporation.

Reliability

The PLCC is found to be as reliable as plastic dual-in-line packages. As discussed, the lead frame material is copper alloy. The die is attached with silver epoxy. The wire is 99.9% pure gold and the plastic is Morton 579TS. The stress conditions (Table II) are the same used to evaluate the reliability of plastic DIPs. They were as follows:

Temperature/Humidity Bias:
T_A = 85°C, RH = 85%, V_{CC} = 5 V

Pressure Cooker:
15 psig, 100% saturated steam

High Temperature Storage Life:
T_A = 150°C

Temperature Cycle:
−65°C to 150°C

High Temperature Operating Life:
T_A = 125°C, V_{CC} = 5 V

Solderability:
Over-aged at 125°C

Thermal Shock:
−65°C to 150°C

Table II. Reliability Evaluation Results (20-Pin PLCC)

Device	Stress	Stress Duration	Cumulative Results	Analysis
74LS245	85°C/85% RH V_{CC} = 5.5 V	2000 Hours	52/0	–
74LS245	15 psig Pressure Cooker	432 Hours	35/3	Lead Corrosion
74LS245	150°C Storage Life	1000 Hours	32/0	–
74LS245	Thermal Shock −65°C to 150°C	1000 Cycles	38/0	–
74LS245	125°C Operating Life	2000 Hours	45/0	–
74LS245	Solderability (Over-Aged)	–	38/0	–
74LS245	Temp Cycle −65°C to 150°C	2000 Hours	45/0	–

TEXAS INSTRUMENTS

Texas Instruments reserves the right to make changes at any time in order to improve design and to supply the best product possible.

Texas Instruments assumes no responsibility for infringement of patents or rights of others based on Texas Instruments applications assistance or product specifications, since TI does not possess full access to data concerning the use or applications of customer's products. TI also assumes no responsibility for customer product designs.

GET HIGH TECHNOLOGY WITHOUT HIGH ANXIETY.

"DON'T GIVE ME EXCUSES ABOUT 'UNDELIVERED PARTS', McGINNIS! I WANT THESE ROBOTS COMPLETED AND READY FOR SHIPPING BY NINE O'CLOCK TOMORROW MORNING!"

CALL SCHWEBER FOR IMMEDIATE DELIVERY ON:

AMD	Century Data	Harris	Mostek	Sprague
AMI	Computer Memories, Inc.	Hewlett Packard	Motorola	Tandon
AMP	Corning	IBM	National	Timeplex
Allen-Bradley	Crydom	IR	Qume	Western Peripherals
Amphenol	Data General	Intersil	Racal-Vadic	Westinghouse
Anadex	Esprit	Intersil Systems	RCA	Zilog
Beehive international	Fairchild	KEMET	Robinson Nugent	
Bourns	General Electric	King	Seeq	
Burndy	General Instrument/Opto.	3M	Signetics	

Schweber is the high technology leader in distribution. Our technology centers are located nationwide. Staffed with specialists, they feature the latest in computer products, semiconductors and passive components.

Westbury, NY: 516/334-7474 ■ Rochester, NY: 716/424-2222 ■ Fairfield, NJ: 201/227-7880 ■ Danbury, CT: 203/792-3500
Bedford, MA: 617/275-5100 ■ Manchester, NH: 603/625-2250 ■ Horsham, PA: 215/441-0600 ■ Pittsburgh, PA: 412/782-1600
Gaithersburg, MD: 301/840-5900 ■ Raleigh, NC: 919/876-0000 ■ Atlanta, GA: 404/449-9170 ■ Huntsville, AL: 205/882-2200
Orlando, FL: 305/331-7555 ■ Hollywood, FL: 305/927-0511 ■ Dayton, OH: 513/439-1800 ■ Beachwood, OH: 216/464-2970
Livonia, MI: 313/525-8100 ■ Elk Grove, IL: 312/364-3750 ■ Brookfield, WI: 414/784-9020 ■ Edina, MN: 612/941-5280
Cedar Rapids, IA: 319/373-1417 ■ Kansas City, KA: 913/492-2921 ■ St. Louis, MO: 314/739-0526 ■ Tulsa, OK: 918/622-8000
Dallas, TX: 214/661-5010 ■ Austin, TX: 512/458-8253 ■ Houston, TX: 713/784-3600 ■ Phoenix, AZ: 602/997-4874
Sacramento, CA: 916/929-9732 ■ Santa Clara, CA: 408/748-4700 ■ Canoga Park, CA: 213/999-4702
Irvine, CA: 714/863-0200, 213/537-4321

SCHWEBER ELECTRONICS

© 1984 SCHWEBER ELECTRONICS CORPORATION

© IC MASTER 1984

MILITARY PARTS DIRECTORY

This section is divided into three parts: a table of those manufacturers willing to perform MIL-STD-883 screening, a two-way military to commercial cross reference index, and the Qualified Parts List broken down into functions. It not only shows what devices are on the list and which manufacturers supply them, but also it decodes the military numbers into familiar terms.

Detailed Product Information provided by:

Inmos Corporation	501
Micro Power Systems	503
National Semiconductor	504
Raytheon	508
RCA	510
SEEQ Technology	513
Signetics	521
Synertek	535
Texas Instruments	536
Xicor	547

The manufacturers listed above have provided detailed information on their latest and most significant products.

HOW TO USE THE MILITARY PARTS DIRECTORY

The following Military Device Testing table shows the manufacturers who have advised that they want to screen devices to MIL-STD-883 and/or perform other environmental screening. The table also indicates which companies are currently qualified to supply one or more devices on the QPL list. Such achievement is apt to indicate that these companies are well equipped to perform 883 testing. The Military Parts Index provides convenient cross equivalents; plus indication of which devices are listed in the latest QPL.

The heart of this section is the Military Parts Directory, which is a functional QPL parts list. It is based on the latest Defense Electronics Supply Center Qualified Products List (QPL-38510-XX) at the time of publication. The revision and date of this list are indicated at the bottom of each page. The devices are identified by major functions; within each function the devices are arranged in alphanumeric order, which automatically groups CMOS together, 5400 Series together, etc.

A complete military part number includes a three letter suffix signifying the device class and packaging. The definitions of these letters are given in the Part Number Guide under "JAN Nomenclature." The package styles and lead finishes that each manufacturer is qualified to supply can be determined by consulting the official QPL or by contacting the individual manufacturers. Once you have found the names of the companies you need to contact, you can reach them by using the information in the Manufacturers and Distributors Directory.

© IC MASTER 1984

VERZEICHNIS MILITÄRISCHER ICs

Dieser Abschnitt besteht aus drei Teilen: einem Verzeichnis de Hersteller, welche eine Prüfung nach Mil-Standard 883 vornehmen, eine sowohl militärische als auch kommerzielle Äquivalenzliste und die QPL-Listung nach Funktionen. Hier wird nicht nur genannt, welche Bauelemente verfügbar sind und wer sie liefert, sondern es werden außerdem militärische Typennummern in allgemeinverständliche umgeschlüsselt.

GEBRAUCHSANLEITUNG FÜR DAS VERZEICHNIS MILITÄRISCHER ICs

Die nächste Seite enthält eine Liste jener Hersteller, dia eine Prüfung nach MIL-Standard 883 vornehmen und/oder andere Tests für verschärfte Umweltbedingungen durchführen. Die Liste zeigt außerdem, welche Firmen gegenwärtig für die Lieferung von einem oder mehreren Bauteilen nach QPL qualifiziert sind. Eine solche Qualifikation ist ein Hinweis darauf, daß diese Firmen für eine Prüfung nach 883 gut ausgerüstet sind. Die folgenden vier Seiten enthalten praktische Äquivalenzlisten von M38510-Nummern zu deren kommerziellen Bezeichnungen mit einem Hinweis darauf, welche Bauteile in der neuesten QPL-Listung aufgeführt sind.

Das Kernstück dieses Abschnitts ist die QPL-Liste nach Funktionen. Sie basiert auf der neuesten Defense Electronics Supply Center Qualified Products List (QPL-385 10-XX) zum Zeitpunkt der Drucklegung. Die Ausgabe und das Datum dieser Liste werden am Ende jeder Seite angegeben. Die Bauteile sind nach den wichtigsten Funktionen geordnet. Innerhalb jeder Funktion werden sie in alphanumerischer Reihenfolge aufgeführt, so daß automatisch CMOS zusammen sind, 5400 Serien zusammen sind usw.

Eine Vollstandige Militärische Typennummer umfast ein Suffix von drei Bruchstaben, welche die Klassifizierung und Gehäuseform des Bauelements bedeuten. Diese Buchstaben werden im Numerischen Typenverzeichnis unter "JAN Nomenclature" erläutert. Die Gehäuseformen und Ausführung der Anschlüsse, die jeder Hersteller liefern darf, können über die offizielle QPL-Listung oder über die einzelnen Hersteller in Erfahrung gebracht werden. Haben Sie einmal die Namen der Firmen gefunden, die Sie brauchen, können Sie weitere Informationen über das Hersteller- und Distributoren-verzeichnis erhalten.

© IC MASTER 1984

CATALOGUE DES PIECES MILITAIRES

Cette section est divisée en trois catégories : un tableau des fabricants se conformant à la méthode MIL-STD-883, un index de référence entre le domaine militaire et le domaine industriel, et une liste par fonction des pièces qualifiées (QPL). Non seulement les appareils figurant sur la liste et les noms de leurs fabricants sont indiqués, mais les numéros des pièces militaires sont décodés en des termes plus compréhensibles pour les industriels.

COMMENT SE SERVIR DU CATALOGUE DES PIECES MILITAIRES

La page suivante offre un tableau donnant les noms des fabricants désireux de sélectionner des appareils suivant la méthode MIL-STD-883, ou d'exécuter d'autres tests d'environnement. Ce tableau énumère également les sociétés actuellement qualifiées pour produire un ou plusieurs appareils figurant sur la Liste de Pièces Militaires (QPL). Il est sous-entendu que ces sociétés possèdent l'equipement nécessaire pour accomplir les tests éxigés par la méthode 883. Les quatre pages suivantes fournissent un index pratique de référence entre les numéros de la méthode M38510 et leurs équivalents industriels, ainsi que la liste des appareils figurant sur la QPL la plus récente.

Le coeur de cette section est la Liste des Pièces Qualifiées. Elle est basée sur l'edition las plus recente de la QPL publiée par le "Defense Electronics Supply Center" lors de la publication de ce catalogue (QPL-38510-XX). Le numéro et la date de révision de cette liste sont indiqués au bas de chaque page. Les appareils sont identifiés par fonctions principales. Dans chaque fonction les appareils sont indiqués par ordre alphanumérique, ce qui regroupe automatiquement les CMOS ensemble, les séries 5400 ensemble, etc. . .

Un numéro complet de pièce militaire comprend un suffixe de trois lettres qui détermine lat catégorie de l'appareil et le type de boitier utilisé. La définition de ces lettres est fournie dans le Guide des Numéros de Pièces (Part Number Guide) sous la nomenclature JAN. Les types de boitier et de finition que chaque fabricant est qualifié de produire, peuvent être déterminés en consultant la QPL officielle ou en contactant les fabricants respectifs. Une fois que vous connaissez les noms des sociétés que vous desirez contacter, vous pourrez en obtenir les adresses et numéros de téléphone en consultant l'Annuaire des Fabricants et Distributeurs (Manufacturers and Distributors Directory).

© IC MASTER 1984

DIRECTORIO DE PARTES PARA USO MILITAR

Esta sección está dividada en tres partes: Una tabla de aquellos fabricantes que seleccionan componentes de acuerdo a la ESPECIFICATIÓN MILITAR-883*, un índice de referencia entre componentes militares y comerciales, y una Lista de partes subdividida en funciones. No solo muestra que componentes forman parte de la lista y que fabricantes la proveen, sino también traduce los números militares a términos familiares.

MODO DE EMPLEO DEL DIRECTORIO DE PARTES PARA USO MILITAR

La siguiente página contiene una tabla de fabricantes que desean seleccionar partes de acuerdo a la ESPECIFICACION MILITAR-883 y/o ejecutar otro tipo de segregación ambiental. La tabla también indica que compañías están calificadas para proveer una o más componentes en la lista QPL. Esta proeza es un indicio que dichas compañías están equipadas para ejecutar la prueba 883. Las siguientes cuatro páginas proveen referencias convenientes entre los números M3851 y sus equivalentes comerciales, además indica que componentes aparecen en la lista más reciente de QPL.

La importancia de esta sección está en la lista funcional de componentes QPL. Está basada en la lista de productos del Centro de Abastecimiento de Defensa Electronica más reciente (QPL-38510-XX) antes de su publicación. La revisión y fecha de esta lista aparecen al pie de cada página. Las componentes están identificadas de acuerdo a funciones; que a su vez están organizadas en ordén alfabético-numérico, que automáticamente agrupa las familias CMOS, 5400, etc.

La numeración completa de una componente militar incluye un sufijo de tres letras alfabéticas que determinan la clase y estilo constructivo de la componente. Las definiciones de estas letras se encuentran en la Guía de Numero de Pieza bajo "nomenclatura JAN." El estilo constructivo y acabado de las terminales que cada fabricante suple puede ser determinado consultando el QPL oficial o comunicándose con los fabricantes mismos. Después de haber averiguado los nombres de las compañías a las que deberá dirigirse, puede ponerse en contacto con ellos por medio del Directorio de Fabricantes y Distribuidores.

© IC MASTER 1984

ミリタリー用部品録

このセクションは次の３部門に分れています。(1)ＭＩＬ-ＳＴＤ-８８３のスクリーニングをするメーカー表，(2)一般型名からミリタリー番号を，ミリタリー番号から一般型名を探し出すクロスリファレンス表，(3)機能別に分類された認定部品表，これは部品名丈でなくそのメーカー名とミリタリー番号のなじみの深い用語への対応も網羅しています。

使用方法

次ページにはＭＩＬ-ＳＴＤ-８８３並に他のスクリーニングをするメーカー名が記載されています。その表にはどのメーカーが現在ＱＰＬ（認定部品表）上のどんな製品の供給に認定されているかも示していますから，記載されているメーカーが８８３による試験設備を備えているかどうか判断することも出来ます。その後の４ページはミリタリーから一般型名，一般型名からミリタリーのクロスリファレンスで最新のＱＰＬに記載されている型名も分ります。

このセクションの最も大切な所は機能別ＱＰＬ部品リストです。これは本マスター発行時点で最新の国防省電子部品供給センター（ＤＥＳＣＥ)認定品リスト（ＱＰＬ-３８５１０-××）に基くものです。本リストの改定又は日付は各ページの下欄に示されています。デバイスは主要機能毎に記載されています。その機能毎にデバイスはアルファベット順にのっていますのでCMOSはCMOS内に，５４００シリーズは５４００シリーズ内にまとめられています。

ミリタリー部品番号はデバイスのクラス分けパッケージ分けを示す３文字のサフィックスを入れています。この３文字の規定はパーツナンバーガイドのＪＡＮノーメンクラチュアに記載されています。各メーカーが認定されているパッケージ形状とリード仕上げは公式のＱＰＬを見るか個々のメーカーに連絡して下さい。連絡先の住所，電話番号等は“メーカー，代理店ダイレクトリー”にのせてあります。

MANUFACTURER	MIL-M-38510 QPL				MIL-STD-883 SCREENING			OTHER SCREENING	
	Linear	TTL	Other Bipolar	CMOS	Class B	Class C	Class S	Military	Industrial
Advanced Micro Devices	X	X	X		X	X	X	X	X
American Microsystems, Inc.					X	X	limited	X	X
Analog Devices					X			X	X
Analog Systems					X			X	X
Apex Microtechnology					X			X	X
Burr-Brown					X		limited	X	X
California Devices					X	X	limited	X	X
Cherry Semiconductor					X	X	X	X	X
Circuit Technology					X	X	X	X	X
Comlinear					X				
Cybernetic Micro Systems					X				
Datel					X	X	X	X	X
Dumont Alphatron				X	X	X		X	X
Exar Integrated Systems					X	X	X	X	X
Fairchild Semiconductor	X	X	DTL	X	X	X	X	X	X
Fujitsu Microelectronics					X			X	X
General Instrument					X	X	X	X	X
Harris Semiconductor	X		PROM		X	X	X	X	X
Holt					X	X	X	X	X
Hughes Aircraft					X	X	X	X	X
Hybrid Systems					X	X	X	X	X
Hycomp					X	X	X	X	X
ILC - Data Device					X	X	X	X	X
INMOS					X	X		X	X
Integrated Device Technology				X	X	X	X	X	X
Intel			μP		X	X		X	X
Interdesign					X	X		X	X
International Microcircuits					X	X	limited	X	X
International Microelectronic Products					X	X		X	X
Intersil	X				X	X	X	X	X
Intronics					X			X	X
Linear Technology					X	X		X	X
LSI Computer Systems					X	X	X	X	X
Micro Networks					X	X		X	X
Micropac					X	X		X	X
Micro Power Systems					X	X	X	X	X
Micro-Sciences				X	X	X		X	X
Mitel Semiconductor					X	X			
Monolithic Memories		X	PROM		X	X	X	X	X
Mostek					X	X		X	X
Motorola Semiconductor	X	X	ECL, μP	X	X		X	X	X
National Semiconductor	X	X		X	X	X	X	X	X
NCM Corporation				X	X	X		X	X
NCR Microelectronics					X			X	X
NEC Electronics					X	X			X
Nitron					X	X	X	X	X
OEI	X		X		X				
Plessey Semiconductors					X	X	X		
Precision Monolithics	X		DAC		X	X	X	X	X
Raytheon Semiconductor	X	X	X		X	X	X	X	X
RCA Solid State	X			X	X	X	X	X	X
Rockwell					X	X		X	X

© IC MASTER 1984

MANUFACTURER	MIL-M-38510 QPL				MIL-STD-883 SCREENING			OTHER SCREENING	
	Linear	TTL	Other Bipolar	CMOS	Class B	Class C	Class S	Military	Indus-trial
Advanced Micro Devices	X	X	X		X	X	X	X	X
SGS Semiconductor					X	X	X	X	X
Signetics	X	X	PROM		X	X	X	X	X
Silicon General					X	X	X	X	X
Siliconix			Analog Switches		X	X	X	X	X
Solid State Scientific				X	X	X		X	X
Solitron					X	X	X	X	X
Sprague Electric					X	X	X	X	X
Standard Microsystems Corp.					X	X	X	X	X
Supertex					X	X		X	X
Synertek					X	X		X	X
Technitrol					X	X		X	X
Teledyne Crystalonics					X	X	X	X	X
Teledyne Philbrick					X	X	X	X	X
Teledyne Semiconductor					X	X		X	X
Texas Instruments	X	X	RAM		X	X	X	X	X
TLSI					X	X		X	X
TRW LSI					X	X	X	X	X
Unitrode Corp					X	X	limited	X	X
Xicor					X			X	X
Zilog					X	X		X	X

EXPLANATION:

The "MIL-M-38510" section indicates the IC manufacturers currently providing Q.P.L. ICs. More detailed information on the specific devices is given in the Qualified Products lists which follow.

The "MIL-STD-883 Screening" section lists those manufacturers who are both set up and actively want to screen devices to the levels indicated. "Other Screening" shows those who report that they want business calling for special military and industrial environment screening procedures.

© IC MASTER 1984

CROSS REFERENCE — COMMERCIAL TO MILITARY

Device	M38510/	QPL
AM27S07A	26001	
AM27S03A	26002	
AM27S07	26003	
AM27S03	26004	
AM91L30AF	23706	
AM91L30ADM	23708	
AM91L30AFM	23708	
AM91L30CDM	23707	
AM91L30CF	23705	
AM91L30CFM	23707	
AM91L40ADM	23716	
AM91L40AFC	23714	
AM91L40AFM	23716	
AM91L40CDM	23715	
AM91L40CFC	23713	
AM91L40CFM	23715	
AM9130ADM	23704	
AM9130AFC	23702	
AM9130CDM	23703	
AM9130AFM	23704	
AM9130CFC	23701	
AM9130CFM	23703	
AM9140ADM	23712	
AM9140AFC	23710	
AM9140AFM	23712	
AM9140CDM	23711	
AM9140CFC	23709	
AM9140CFM	23711	
DAC-08	11301	X
DAC-08A	11302	X
DAC1020	12705	
DAC1218	12707	
DAC1220	12706	
DG181	11101	X
DG182	11102	X
DG184	11103	X
DG185	11104	X
DG187	11105	X
DG188	11106	X
DG190	11107	X
DG191	11108	X
DG200	12303	
DG201	12304	
DG300	11601	X
DG301	11602	
DG302	11603	X
DG303	11604	X
DG304	11605	X
DG305	11606	X
DG306	11607	X
DG307	11608	X
ER2810	22501	
HA-2500	12204	X
HA-2700	12201	
HA-2510	12205	X
HA-2520	12206	X
HA-2600	12202	X
HA-2620	12203	X
HA-4741	11003	X
HD15530	50101	
HI200	12301	
HI201	12302	
HPROM0512	20101	X
IM5603A	20201	
IM5623	20202	
LF147	11906	
LF151	11904	
LF153	11905	
LF198	12501	
LH2101A	10105	X
HM7602-2	20701	X
HM7603-2	20702	X
HM7610-2	20301	X
HM7611-2	20302	X
HM76160-2	21001	
HM76161-2	21002	X
HM7620-2	20401	X
HM7621-2	20402	X
HM7640-2	20801	X
HM7641-2	20802	X
HM7642-2	20601	X
HM7643-2	20602	X
HM7644-2	20603	
HM7680-2	20903	
HM7681-2	20904	
HM7684-2	20901	
HM7685-2	20902	
LH2110	10603	
LH2111	10305	X
LM101A	10103	X
LM102	10601	X
LM104	10202	
LM105	10203	
LM106	10303	
LM108A	10104	X
LM109	10701	X
LM110	10602	
LM111	10304	X
LM117H	11703	
LM117k	11704	
LM118	10107	
LM129A	12402	
LM137H	11803	
LM137K	11804	
LM150K	11705	
LM199A	12401	
LM120H-05	11501	
LM120H-12	11502	
LM120H-15	11503	
LM120H-24	11504	
LM120K-05	11505	
LM120K-12	11506	
LM120K-15	11507	
LM120K-24	11508	
LM124	11005	
LM139	11201	X
LM140K-05	10706	
LM140K-12	10707	
LM140K-15	10708	
LM140K-24	10709	
LM141H-05	10702	
LM141H-12	10703	
LM141H-15	10704	
LM141H-24	10705	
LM148	11001	X
LM149	11002	
LM193	11202	
LM723	10201	X
MC6821	40101	
MCM5303	20101	
MCM5304	20102	
MCM6604A*	23602	
MCM6604A†	23604	
MCM6605*	23601	
MCM6605†	23603	
MH0026	03501	
MK34000	40301	
MKB4096*	23602	
MKB4096†	23604	
MM5280*	23505	
MM5280†	23506	
MPY8HJM	50004	
MJY12HJM	50005	
MPY16HJM	50006	
MPY24HJM	50007	
PAL10H8	50301	X
PAL10L8	50306	X
PAL12H6	50302	
PAL12L6	50307	
PAL14H4	50303	X
PAL14L4	50308	
PAL16A4	50406	
PAL16C1	50305	
PAL16H2	50304	
PAL16L2	50309	
PAL16L8	50401	
PAL16R4	50404	
PAL16R6	50403	
PAL16R8	50402	
PAL16X4	50405	
PM155	11401	X
PM155A	11404	X
PM156	11402	X
PM156A	11405	X
PM157	11403	X
PM157A	11406	X
PM2108A	10106	X
S6831B	40301	
Special	15504	X
TDC1008JM	50001	
TDC1009JM	50002	
TDC1010JM	50003	
TMS4050*	23502	
TMS4050†	23504	
TMS4060*	23501	
TMS4060†	23503	
Z80	48002	X
Z80A	48001	X
Z80CTC	48302	
Z80A CTC	48301	
Z80 DMA	48202	
Z80A DMA	48201	
Z80 P10	48402	
Z80A P10	48401	
Z80 S10/2	48102	
Z80A S10/2	48101	
Z80B	48003	
Z8001	52001	
Z8001A	52003	
Z8002	52002	X
Z8002A	52004	X
061	11901	
062	11902	
064	11903	
071	11904	
072	11905	
074	11906	
10501	06001	X
10502	06002	X
10504	06201	X
10505	06003	X
10506	06004	X
10507	06005	X
10509	06006	X
10524	06301	X
10525	06302	X
10531	06101	X
10535	06104	X
10576	06103	X
10597	06202	X
10631	06102	X
1524	12601	
1558	10108	X
1802	47001	
1821	47101	
1822	47102	
1832	47201	
1852	47301	
1853	47401	
1856	47601	
1857	47602	
2114	23802	
2114A	23804	
2117	24001	
2117	24002	
2147H	23801	
2147H	23803	
2147H	23805	
2147H	23807	
2148H	23806	
2164 (1ms ref)	24401	
2164 (1ms ref)	24402	
2316E	40301	
2516	22101	
2532	22202	
2532	22201	
25LS174	33106	
25LS175	33107	
2616	40301	
2708	22001	
2716	22101	
2732	22201	
2901A	44001	
2905	44101	
2906	44102	
2907	44103	
2909	44301	
2910	44501	
2914	44401	
2915	44104	
2916	44105	
2917	44106	
2918	44201	
29681	21002	
3018A	10801	
3045	10802	X
3516F	40301	
3636	21002	
4000A	05201	X
4000B	05251	
4001A	05202	X
4001B	05252	
4002A	05203	X
4002B	05253	
4006A	05701	X
4006B	05751	
4007A	05301	X
4007UB	05351	
4008A	05401	X
4008B	05451	
4009A	05501	X
4009B	05551	
4010A	05502	X
4010B	05552	
40100B	17902	
40102B	18101	
40103B	18102	
40104B	17903	
40105B	17904	
40106B	17702	
40107B	17402	
40108B	17905	
40109B	17404	
4011A	05001	X
4011B	05051	
4012A	05002	X
4012B	05052	
4013A	05101	X
4013B	05151	
4014A	05702	X
4015A	05703	X
4015B	05753	
4016A	05801	X
4016B	05851	
40160B	18001	
40161B	18002	
40162B	18003	
40163B	18004	
4017A	05601	X
4017B	05651	
40174B	17505	
4018A	05602	X
4018B	05652	
4019A	05302	X
4019B	05352	X
40129B	18103	
40193B	18104	
40194B	17906	
4020A	05603	X
4020B	05653	
40208B	17907	
4021A	05704	
4021B	05754	
4022A	05604	
4022B	05654	
4023A	05008	X
4023B	05053	
4024A	05605	X
4024B	05655	
4025A	05204	X
4025B	05254	
40257B	17803	
4027A	05102	X
4027B	05152	
4028A	05901	
4028B	05951	
4030A	05303	
4030B	05353	
4031A	05705	
4034A	05706	
4034B	05756	
4041A	05505	
4041B	05752	
4041UB	05555	
4043A	05103	X
4043B	05153	
4048A	05304	
4048B	05354	
4049A	05503	X
4049B	05553	
4049UB	05553	
4050A	05504	X
4050B	05154	
4050B	05554	

NOTE: Items marked X in the QPL column are listed on QPL-38510-56 with at least one source. * 85°C Max. † 100°C Max.

© IC MASTER 1984

CROSS REFERENCE — COMMERCIAL TO MILITARY (Continued)

Device	M38510/	QPL
4066A	05802	X
4066B	05852	
4067B	17801	
4069UB	17401	X
4070B	17203	X
4071B	17101	X
4072B	17102	X
4073B	17003	X
4075B	17103	X
4076B	17501	
4077B	17204	X
4081B	17001	X
4082B	17002	X
4085B	17201	X
4086B	17202	X
4093B	17701	
4094	17901	
4095B	17502	
4096B	17503	
4097B	17802	
4098B	17504	X
4099B	17601	X
4116 (250ns)	24001	X
4116 (250ns)	24002	X
4136	11004	X
4156	11003	X
4502B	17403	X
4508B	17602	
4510B	18105	
4514B	17301	
4515B	17302	
4516B	18106	
4518B	18107	
4520B	18108	
4532B	17303	
4555B	17304	
4556B	17305	
4564 (1ms ref)	24401	
4564 (2ms ref)	24402	
5040	10501	
5041	10502	
5042	10503	
5043	10504	
5044	10505	
5045	10506	
5046	10507	
5047	10508	
506	19001	
506A	19002	
507	19003	
507A	19004	
508	19007	
508A	19005	
509	19008	
509A	19006	
5200	12001	
5201	12003	
5202	12005	
5203	12002	
5204	12004	
5205	12006	
5206	12007	
5207	12008	
5210	12009	
5211	12011	
52116	40301	
5212	12013	
5213	12010	
5214	12012	
5215	12014	
5216	12015	
5217	12016	
53S1680	21001	
53S1681	21002	
5300-1	20301	
5301-1	20302	
5305-1	20401	
5306-1	20402	
5330	20701	
5331	20702	
5340-1	20801	
5341-1	20802	
5348-1	20804	
5349-1	20805	
5352-1	20601	
5353-1	20602	

Device	M38510/	QPL
5380-1	20903	
5381-1	20904	
54C929	23901	
54C930	23902	
54F00	33001	
54F02	33301	X
54F04	33002	
54F074	34101	
54F08	34001	X
54F086	34501	
54F10	33003	
54F11	34002	X
54F20	33004	
54F32	33501	X
54F64	33401	X
54F109	34102	
54F112	34103	
54F138	33701	
54F139	33702	
54F151	33901	
54F153	33902	
54F137	33903	
54F158	33904	
54F175	34104	
54F194	33601	
54F240	33201	
54F241	33202	
54F244	33203	
54F241	33905	
54F253	33908	
54F247	33906	
54F25A8	33907	
54F352	33909	
54F353	33910	
54F374	34105	
54F533	34601	
54F534	34106	
54H00	02304	X
54H01	02306	X
54H04	02305	X
54H08	15501	X
54H10	02303	X
54H101	02205	X
54H103	02206	X
54H11	15502	X
54H20	02302	X
54H21	15503	X
54H22	02307	
54H30	02301	X
54H40	02401	X
54H50	04001	X
54H51	04002	X
54H53	04003	X
54H54	04004	X
54H55	04005	X
54H72	02201	X
54H73	02202	
54H74	02203	
54H76	02204	X
54LS00	30001	X
54LS02	30301	X
54LS03	30002	X
54LS04	30003	X
54LS05	30004	X
54LS08	31004	X
54LS09	31005	
54LS10	30005	X
54LS107	30108	X
54LS109	30109	X
54LS11	31001	X
54LS112	30103	X
54LS113	30104	X
54LS114	30105	X
54LS12	30006	X
54LS122	31403	X
54LS123	31401	X
54LS124	31701	
54LS125	32301	X
54LS126	32302	X
54LS13	31301	X
54LS132	31303	X
54LS138	30701	X
54LS139	30702	X
54LS14	31302	X
54LS148	36001	X
54LS15	31002	X

Device	M38510/	QPL
54LS151	30901	X
54LS153	30902	X
54LS155	32601	X
54LS156	32602	X
54LS157	30903	X
54LS158	30904	X
54LS160	31503	X
54LS161	31504	X
54LS162	31511	X
54LS163	31512	X
54LS164	30605	X
54LS165	30608	X
54LS166	30609	X
54LS168	31505	
54LS169	31506	
54LS170	31902	
54LS174	30106	X
54LS175	30107	X
54LS181	30801	
54LS190	31513	X
54LS191	31509	X
54LS192	31507	X
54LS193	31508	X
54LS194	30601	X
54LS195	30602	X
54LS196	32001	
54LS197	32002	X
54LS20	30007	X
54LS21	31003	X
54LS22	30008	X
54LS221	31402	X
54LS240	32401	X
54LS241	32402	X
54LS242	32801	X
54LS243	32802	X
54LS244	32403	X
54LS245	32803	X
54LS251	30905	X
54LS253	30908	X
54LS257	30906	X
54LS258	30907	X
54LS259	31603	X
54LS26	32102	X
54LS261	31801	
54LS266	30303	X
54LS27	30302	X
54LS273	32501	X
54LS279	31602	X
54LS28	30204	X
54LS280	32901	X
54LS283	31202	X
54LS290	32003	X
54LS293	32004	X
54LS295	30606	X
54LS298	30909	X
54LS30	30009	X
54LS32	30501	X
54LS324	31702	
54LS348	36002	X
54LS363	32505	
54LS365	32201	X
54LS366	32202	X
54LS367	32203	X
54LS368	32204	X
54LS37	30202	X
54LS373	32502	X
54LS374	32503	X
54LS375	31604	X
54LS377	32504	X
54LS38	30203	X
54LS390	32701	X
54LS393	32702	X
54LS395	30607	X
54LS40	30201	X
54LS42	30703	X
54LS424	42201	
54LS428	42301	
54LS47	30704	X
54LS490	32703	X
54LS51	30401	X
54LS54	30402	X
54LS624	31704	
54LS629	31703	
54LS640	32804	
54LS641	32805	
54LS642	32806	

Device	M38510/	QPL
54LS645	32807	
54LS670	31901	X
54LS73	30101	X
54LS74	30102	X
54LS75	31601	X
54LS76	30110	X
54LS83A	31201	X
54LS85	31101	X
54LS86	30502	X
54LS90	31501	X
54LS905	44101	
54LS906	44102	
54LS907	44103	
54LS915	44104	
54LS916	44105	
54LS917	44106	
54LS92	31510	X
54LS93	31502	X
54LS95	30603	X
54LS96	30604	X
54L00	02004	X
54L01	02006	X
54L02	02701	X
54L03	02006	X
54L04	02005	X
54L10	02003	X
54L121	04201	
54L122	04202	
54L164	02802	
54L193	02503	
54L20	02002	X
54L30	02001	X
54L42	02901	
54L43	02902	
54L44	02903	
54L46	02904	
54L47	02905	
54L51	04101	
54L54	04102	
54LS54	04104	
54L55	04103	
54L71	02101	X
54L72	02102	X
54L73	02103	X
54L74	02105	X
54L78	02104	X
54L86	02601	X
54L90	02501	X
54L91	02806	
54L93	02502	X
54L95	02801	X
54S00	07001	X
54S02	07301	X
54S03	07002	X
54S04	07003	X
54S05	07004	X
54S08	08003	X
54S09	08004	X
54S10	07005	X
54S11	08001	X
54S112	07102	X
54S113	07103	X
54S114	07104	
54S133	07009	X
54S134	07010	
54S135	07502	
54S138	07701	
54S139	07702	X
54S140	08101	X
54S15	08002	
54S151	07901	X
54S153	07902	X
54S157	07903	X
54S158	07904	X
54S174	07105	X
54S175	07106	X
54S181	07801	X
54S182	07802	
54S194	07601	
54S195	07602	
54S20	07006	X
54S22	07007	X
54S251	07905	
54S253	07908	
54S257	07906	

NOTE: Items marked X in the QPL column are listed on QPL-38510-56 with at least one source. * 85°C Max. † 100°C Max.

CROSS REFERENCE — COMMERCIAL TO MILITARY (Continued)

Device	M38510/	QPL
54S258	07907	
54S280	07703	
54S30	07008	X
54S40	07201	X
54S412	42101	
54S51	07401	X
54S64	07402	X
54S65	07403	
54S74	07101	X
54S85	08201	X
54S86	07501	X
5400	00104	X
5401	00107	X
5402	00401	X
5403	00109	X
5404	00105	X
5405	00108	X
5406	00801	X
5407	00803	X
5408	01601	X
5409	01602	X
5410	00103	X
54107	00203	X
54116	01503	X
5412	00106	X
54120	15401	
54121	01201	X
54122	01202	X
54123	01203	X
54125	15301	
54126	15302	X
5413	15101	X
54132	15103	X
5414	15102	X
54145	01005	X
54147	15601	
54148	15602	
54150	01401	X
54151	01406	X
54153	01403	X
54154	15201	X
54155	15202	X
54156	15203	X
54157	01405	X
5416	00802	X
54160	01303	X
54161	01306	X
54162	01305	X
54163	01304	X
54164	00903	X
54165	00904	X
54166	00910	
5417	00804	X
54170	01801	
54173	01703	
54174	01701	X
54175	01702	X
54177	01311	
54177	01312	
54180	01901	X
54181	01101	X
54182	01102	X
54186	20101	
54192	01308	X
54193	01309	X
54194	00905	X
54195	00906	X
54196	00909	
54198	01310	
5420	00102	X
5423	00402	X
5425	00403	X
5426	00805	X
5427	00404	X
5428	16201	
5430	00101	X
5432	16101	X
54365	16301	X
54366	16302	X
54367	16303	X
54368	16304	X
5437	00302	X
5438	00303	X
5440	00301	X

Device	M38510/	QPL
5442	01001	X
5443	01002	
5444	01003	
5445	01004	X
5446	01006	X
5447	01007	X
5448	01008	X
5449	01009	
5450	00501	X
5451	00502	X
5453	00503	X
5454	00504	X
5470	00206	X
5472	00201	X
5473	00202	X
5474	00205	X
5475	01501	X
5476	00204	X
5477	01502	X
5479	00207	
5480	00604	
5482	00601	X
5483	00602	X
5485	15001	X
5486	00701	X
5490	01307	X
5492	01301	X
5493	01302	X
5495	00901	X
5496	00902	X
5537	12502	
55107	10401	X
55108	10402	X
55113	10405	X
55114	10403	X
55115	10404	X
55182	10408	
55183	10409	
55325	13001	
55326	13002	
55327	13003	
5534A	13101	
5532A	13102	
55450	12901	
55451	12902	
55452	12903	
55453	12904	
55454	12905	
55460	12906	
55461	12907	
55462	12908	
55463	12909	
55464	12910	
555	10901	X
556	10902	X
558	10903	
561	13301	
562 (2mA)	12101	
562 (5mA)	12102	
563	12102	
563	12103	
584J	12802	
584S	12801	
6108	19007	
6116	19001	
6208	19008	
6216	19003	
6654	21901	
6508	23901	
6504	24501	
6514	24502	
6518	23902	
6665 (1ms ref)	24401	
6665 (2ms ref)	24402	
68A316E	40301	
6800	40001	
6810	40201	
6831B	40302	
68316B	40301	
710	10301	X
711	10302	
723	10201	X
741	10101	X
747	10102	X

Device	M38510/	QPL
7523	12701	
7520	12702	
7521	12703	
7541	12704	
7620-8	20501	
7621-8	20502	
76L70	02805	
76L42A	02906	
771	11904	
772	11905	
774	11906	
78G	11702	
78MG	11701	
78M05	10702	
78M12	10703	X
78M15	10704	X
78M24	10705	
7805	10706	X
7812	10707	X
7815	10708	X
7820	10408	
7824	10709	
7830	10409	
7831	10406	
7832	10407	
79G	11802	
79MG	11801	
79M05	11501	X
79M12	11502	X
79M15	11503	X
79M24	11504	
7905	11505	X
7912	11506	X
7915	11507	X
7924	11508	
80352	49002	
8048	49001	
8080A	42001	X
8086	53001	X
82S10 (45ns)	23107	
82S11 (45ns)	23108	
82S100	50202	
82S101	50201	
82S11	23102	
82S115	20803	X
82S123	20702	X
82S126	20301	X
82S129	20302	X
83S130	20401	X
82S131	20402	X
82S136	20601	
82S137	20602	X
82S140	20801	
82S141	20802	X
82S180	20903	
82S181	20904	X
82S184	20901	
82S185	20902	X
82S190	21001	
82S191	21002	X
82S23	20701	X
82S2708	20905	X
8212	42101	
8224	42201	
8228	42301	
8250	15204	
8251	15205	
8252	15206	
8264 (1ms ref)	24401	
8264 (2ms ref)	24402	
9LS51	30401	
9LS54	30402	
9093	03304	
9218	40301	
93L00	02804	
93L01	02907	
93L08	04502	
93L09	04601	
93L10	02504	
93L12	04602	
93L14	04501	
93L16	02505	
93L18	04301	
93L22	04603	

Device	M38510/	QPL
93L24	04401	
93L28	02803	
93L412 (75ns)	23111	
93L415	23103	X
93L422	23112	X
93L422A	23115	X
93L420	23004	
93L425	23104	X
93L425A (50ns)	23113	
93Z501	21003	
93Z511	21004	X
930	03001	X
9300	00907	
9300	15901	X
9301	15206	X
9304	00603	
9308	01503	
9309	01404	X
9311	15201	X
9312	01402	X
9314	01504	X
9317	15802	
9318	15603	X
9321	15801	
9322	01405	X
9324	15002	X
9328	15902	X
9328	00908	
932	03101	
933	03105	
9334	16001	
9338	15701	
9341	01101	X
93410	23001	
93411	23003	
93412 (60ns)	23109	
93415	23101	
93415 (60ns)	23105	
93415 (45ns)	23107	
93417	20301	
93419	23201	
9342	01102	
93421	23002	
93422 (60ns)	23110	
93422A (45ns)	23114	
93425	23102	X
93425	23106	X
93425A	23108	X
93427	20302	
93436	20401	
93438	20801	
93446	20402	
93448	20802	
93450	20903	
93451	20904	
93452	20601	
93453	20602	
93458	50201	
93459	50202	
93460	20906	
93461	20905	
93470	23301	
93471	23302	
935	03002	X
93510	21001	
93511	21002	
936	03003	X
937501	21003	
940	03002	X
944	03102	
945	03301	
946	03004	X
948	03302	
950	03303	
951	03201	
957	03103	
958	03104	
9601	01204	X
9602	01205	X
9614	10403	X
9615	10404	X
962	03005	X
9900A	46001	
9989	46501	X

NOTE: Items marked X in the QPL column are listed on QPL-38510-56 with at least one source. * 85°C Max. † 100°C Max.

© IC MASTER 1984

CROSS REFERENCE — MILITARY TO COMMERCIAL

M38510/	Device	QPL
00101	5430	X
00102	5420	X
00103	5410	X
00104	5400	X
00105	5404	X
00106	5412	X
00107	5401	X
00108	5405	X
00109	5403	X
00201	5472	X
00202	5473	X
00203	54107	X
00204	5476	X
00205	5474	X
00206	5470	X
00207	5479	
00301	5540	X
00302	5437	X
00303	5438	X
00401	5402	X
00402	5423	X
00403	5425	X
00404	5427	X
00501	5450	X
00502	5451	X
00503	5453	X
00504	5454	X
00601	5482	X
00602	5483	X
00603	9304	
00604	5480	
00701	5486	X
00801	5406	X
00802	5416	X
00803	5407	X
00804	5417	X
00805	5426	X
00901	5495	X
00902	5496	X
00903	54164	X
00904	54165	X
00905	54194	X
00906	54195	X
00907	9300	
00908	9328	
00909	54198	
00910	54166	
01001	5442	X
01002	5443	
01003	5444	
01004	5445	X
01005	54145	X
01006	5446	X
01007	5447	X
01008	5448	X
01009	5449	
01101	54181	X
01101	9341	X
01102	54182	X
01102	9342	
01201	54121	X
01202	54122	X
01203	54123	X
01204	9601	X
01205	9602	X
01301	5492	X
01302	5493	X
01303	54160	X
01304	54163	X
01305	64162	X
01306	54161	X
01307	5490	X
01308	54192	X
01309	54193	X
01310	54196	
01311	54177	
01312	54177	
01401	54150	X
01402	9312	X
01403	54153	X
01404	9309	X
01405	9322	X
01405	54157	X
01406	54151	X
01501	5475	X
01502	5477	X

M38510/	Device	QPL
01503	9308	
01503	54116	X
01504	9314	X
01601	5408	X
01602	5409	X
01701	54174	X
01702	54175	X
01703	54173	
01801	54170	
01901	54180	X
02001	54L30	X
02002	54L20	X
02003	54L10	X
02004	54L00	X
02005	54L04	X
02006	54L03	X
02006	54L01	X
02101	54L71	X
02102	54L72	X
02103	54L73	X
02104	54L78	X
02105	54L74	X
02201	54H72	X
02202	54H73	
02203	54H74	
02204	54H76	X
02205	54H101	X
02206	54H103	X
02301	54H30	X
02302	54H20	X
02303	54H10	X
02304	54H00	X
02305	54H04	X
02306	54H01	X
02307	54H22	
02401	54H40	X
02501	54L90	X
02502	54L93	X
02503	54L193	
02504	93L10	
02505	93L16	
02601	54L86	X
02701	54L02	X
02801	54L95	X
02802	54L164	
02803	93L28	
02804	93L00	
02805	76L70	
02806	54L91	
02901	54L42	
02902	54L43	
02903	54L44	
02904	54L46	
02905	54L47	
02906	76L42A	
02907	93L01	
03001	930	X
03002	940	X
03002	935	X
03003	936	X
03004	946	X
03005	962	X
03101	932	
03102	944	
03103	957	
03104	958	
03105	933	
03201	951	
03301	945	
03302	948	
03303	950	
03304	9093	
03501	MH0026	
04001	54H50	X
04002	54H51	X
04003	54H53	X
04004	54H54	X
04005	54H55	X
04101	54L51	
04102	54L54	
04103	54L55	
04104	54L54	
04201	54L121	
04202	54L122	
04301	93L18	
04401	93L24	

M38510/	Device	QPL
04501	93L14	
04502	93L08	
04601	93L09	
04602	93L12	
04603	93L22	
05001	4011A	X
05002	4012A	X
05008	4023A	X
05051	4011B	
05052	4012B	
05053	4023B	
05101	4013A	X
05102	4027A	X
05103	4043A	X
05151	4013B	
05152	4027B	
05153	4043B	
05154	4050B	
05201	4000A	X
05202	4001A	X
05203	4002A	X
05204	4025A	X
05251	4000B	
05252	4001B	
05253	4002B	
05254	4025B	
05301	4007A	X
05302	4019A	X
05303	4030A	X
05304	4048A	
05351	4007UB	
05352	4019B	X
05353	4030B	
05354	4048B	
05401	4008A	X
05451	4008B	
05501	4009A	X
05502	4010A	X
05503	4049A	X
05504	4050A	X
05505	4041A	
05551	4009B	
05552	4010B	
05553	4049B	
05553	4049UB	
05554	4050B	
05555	4041UB	
05601	4017A	X
05602	4018A	X
05603	4020A	X
05604	4022A	X
05605	4024A	X
05651	4017B	
05652	4018B	
05653	4020B	
05654	4022B	
05655	4024B	
05701	4006A	X
05702	4014A	X
05703	4015A	X
05704	4021A	X
05705	4031A	X
05706	4034A	
05751	4006B	
05752	4014B	
05753	4015B	
05754	4021B	
05756	4034B	
05801	4016A	X
05802	4066A	X
05851	4016B	
05852	4066B	
05901	4028A	
05951	4028B	
06001	10501	X
06002	10502	X
06003	10505	X
06004	10506	X
06005	10507	X
06006	10509	X
06101	10531	X
06102	10631	X
06103	10576	X
06104	10535	X
06201	10504	X
06202	10597	X

M38510/	Device	QPL
06301	10524	X
06302	10525	X
07001	54S00	X
07002	54S03	X
07003	54S04	X
07004	54S05	X
07005	54S10	X
07006	54S20	X
07007	54S22	X
07008	54S30	X
07009	54S133	X
07010	54S134	
07101	54S74	X
07102	54S112	X
07103	54S113	X
07104	54S114	
07105	54S174	X
07106	54S175	X
07201	54S40	X
07301	54S02	X
07401	54S51	X
07402	54S64	X
07403	54S65	
07501	54S86	X
07502	54S135	
07601	54S194	
07602	54S195	
07701	54S138	
07702	54S139	X
07703	54S280	
07801	54S181	X
07802	54S182	
07901	54S151	X
07902	54S153	X
07903	54S157	X
07904	54S158	X
07905	54S251	
07906	54S257	
07907	54S258	
07908	54S253	
08001	54S11	X
08002	54S15	
08003	54S08	X
08004	54S09	X
08101	54S140	X
08201	54S85	X
10101	741	X
10102	747	X
10103	LM101A	X
10104	LM108A	X
10105	LH2101A	X
10106	PM2108A	X
10107	LM118	X
10108	1558	X
10201	LM723	X
10201	723	
10202	LM104	
10203	LM105	
10301	710	X
10302	711	
10303	LM106	
10304	LM111	X
10305	LH2111	X
10401	55107	X
10402	55108	X
10403	55114	X
10403	9614	X
10404	55115	X
10404	9615	X
10405	55113	X
10406	7831	
10407	7832	
10408	55182	
10408	7820	
10409	55183	
10409	7830	
10501	5040	
10502	5041	
10503	5042	
10504	5043	
10505	5044	
10506	5045	
10507	5046	
10508	5047	
10601	LM102	
10602	LM110	

NOTE: Items marked X in the QPL column are listed on QPL-38510-56 with at least one source. * 85°C Max. † 100°C Max.

CROSS REFERENCE — MILITARY TO COMMERCIAL (Continued)

M38510/	Device	QPL
10603	LH2110	
10701	LM109	X
10702	LM141H-05	
10702	78M05	
10703	LM141H-12	
10703	78M12	X
10704	LM141H-15	
10704	78M15	X
10705	LM141H-24	
10705	78M24	
10706	LM140K-05	
10706	7805	X
10707	LM140K-12	
10707	7812	X
10708	LM140K-15	
10708	7815	X
10709	LM140K-24	
10709	7824	X
10801	3018A	
10802	3045	X
10901	555	X
10902	556	X
10903	558	
11001	LM148	X
11002	LM149	
11003	HA4741	X
11003	4156	X
11004	4136	X
11005	LM124	X
11101	DG181A	X
11102	DG182A	X
11103	DG184A	X
11104	DG185A	X
11105	DG187A	X
11106	DG188A	X
11107	DG190A	X
11108	DG191A	X
11201	LM139	X
11202	LM193	
11301	DAC-08	X
11302	DAC-08A	X
11401	PM155	X
11402	PM156	X
11403	PM157	X
11404	PM155A	X
11405	PM156A	X
11406	PM157A	X
11501	LM120H-05	
11501	79M05	X
11502	LM120H-12	
11502	79M12	X
11503	LM120H-15	
11503	79M15	X
11504	LM120H-24	
11504	79M24	
11505	LM120K-05	
11505	7905	X
11506	LM120K-12	
11506	7912	X
11507	LM120K-15	
11507	7915	X
11508	LM120K-24	
11508	7924	
11601	DG300	X
11602	DG301	
11603	DG302	X
11604	DG303	X
11605	DG304	X
11606	DG305	X
11607	DG306	X
11608	DG307	X
11701	78MG	
11702	78G	
11703	LM117H	
11704	LM117K	
11705	LM150K	
11706	LM138K	
11801	79MG	
11802	79G	
11803	LM137H	
11804	LM137K	
11901	061	
11902	062	
11903	064	
11904	071	
11904	771	

M38510/	Device	QPL
11904	LF151	
11905	072	
11905	772	
11905	LF153	
11906	074	
11906	774	
11906	LF147	
12001	5200	
12002	5203	
12003	5201	
12004	5204	
12005	5202	
12006	5205	
12007	5206	
12008	5207	
12009	5210	
12010	5213	
12011	5211	
12012	5214	
12013	5212	
12014	5215	
12015	5216	
12016	5217	
12101	562 (2 μA)	
12102	562 (5 μA)	
12102	563	
12103	563	
12201	HA-2700	
12202	HA-2600	
12203	HA-2620	
12204	HA-2500	
12205	HA-2510	
12206	HA-2520	
12301	HI200	
12302	HI201	
12303	DG200	
12304	DG201	
12401	LM199A	
12402	LM129A	
12501	LF198	
12502	5537	
12601	1524	
12701	7523	
12702	7520	
12703	7521	
12704	7541	
12705	DAC1020	
12705	DAC1220	
12707	DAC1218	
12801	584S	
12802	584J	
12901	55450	
12902	55451	
12903	55452	
12904	55453	
12905	55454	
12906	55460	
12907	55461	
12908	55462	
12909	55463	
12910	55464	
13001	55325	
13002	55326	
13003	55327	
13101	5534A	
13102	5532A	
13301	561	
15001	5485	X
15002	9324	X
15101	5413	X
15102	5414	X
15103	54132	X
15201	54154	X
15201	9311	X
15202	54155	X
15203	54156	X
15204	8250	
15205	8251	
15206	8252	
15206	9301	X
15301	54125	
15302	54126	X
15401	54120	
15501	54H08	X
15502	54H11	X
15503	54H21	X

M38510/	Device	QPL
15504	Special	
15601	54147	
15602	54148	
15603	9318	X
15701	9338	
15801	9321	
15802	9317	
15901	9300	X
15902	9328	X
16001	9334	
16101	5432	X
16201	5428	
16301	54365	X
16302	54366	X
16303	54367	X
16304	54368	X
17001	4081B	X
17002	4082B	X
17003	4073B	X
17101	4071B	X
17102	4072B	X
17103	4075B	X
17201	4085B	X
17202	4086B	X
17203	4070B	X
17204	4077B	X
17301	4514B	
17302	4515B	
17303	4532B	
17304	4555B	
17305	4556B	
17401	4069UB	X
17402	40107B	
17403	4502B	X
17404	40109B	
17501	4076B	
17502	4095B	
17503	4096B	
17504	4098B	X
17505	40174B	
17601	4099B	X
17602	4508B	
17701	4093B	
17702	40106B	
17801	4067B	
17802	4097B	
17803	40257B	
17901	4094B	
17902	40100B	
17903	40104B	
17904	40105B	
17905	40108B	
17906	40194B	
17907	40208B	
18001	40160B	
18002	40161B	
18003	40162B	
18004	40163B	
18101	40102B	
18102	40103B	
18103	40192B	
18104	40193B	
18105	4510B	
18106	4516B	
18107	4518B	
18108	4520B	
19001	506	
19001	6116	
19002	506A	
19003	507	
19003	6216	
19004	507A	
19005	508A	
19006	509A	
19007	508	
19007	6108	
19008	509	
19008	6208	
20101	HPROM0512	X
20101	MCM5303	
20101	54186	
20102	MCM5304	
20201	IM5603A	
20202	IM5623	
20301	HM7610-2	X
20301	5300-1	

M38510/	Device	QPL
20301	82S126	X
20301	93417	
20302	HM7611-2	X
20302	5301-1	
20302	82S129	X
20302	93427	
20401	HM7620-2	X
20401	5305-1	
20401	82S130	X
20401	93436	
20402	HM7621-2	X
20402	5306-1	
20402	82S131	X
20402	93446	
20501	7620-8	
20502	7621-8	
20601	HM7642-2	X
20601	5352-1	
20601	82S136	
20601	93452	
20602	HM7643-2	X
20602	5353-1	
20602	82S137	X
20602	93453	
20603	HM7644-2	
20701	HM7602-2	X
20701	5330	
20701	82S23	X
20702	HM7603-2	X
20702	5331	
20702	82S123	X
20801	HM7640-2	X
20801	5340-1	
20801	82S140	
20801	93438	
20802	HM7641-2	X
20802	5341-1	
20802	82S141	X
20802	93448	
20803	82S115	X
20804	5348-1	
20805	5349-1	
20901	HM7684-2	
20901	82S184	
20902	HM7685-2	
20902	82S185	X
20903	HM7680-2	
20903	5380-1	
20903	82S180	
20903	93450	
20904	HM7681-2	
20904	5381-1	
20904	82S181	X
20904	93451	
20905	82S2708	X
20905	93461	
20906	93460	
21001	HM76160-2	
21001	53S1680	
21001	82S190	
21001	93510	
21002	HM76161-2	
21002	53S1681	
21002	82S191	X
21002	93511	
21002	3636	
21002	29681	
21003	93Z501	
21004	93Z511	X
21901	6654	
22001	2708	
22101	2516	
22101	2716	
22201	2532	
22201	2732	
22202	2532	
22501	ER2810	
23001	93410	
23002	93421	
23003	93411	
23004	93L420	
23101	93415	
23101	82S10	
23102	93425	
23102	82S11	
23103	93L415	X

NOTE: Items marked X in the QPL column are listed on QPL-38510-56 with at least one source. * 85°C Max. † 100°C Max.

© IC MASTER 1984

CROSS REFERENCE — MILITARY TO COMMERCIAL (Continued)

M38510/	Device	QPL
23104	93L425	X
23105	93415 (60 ns)	
23106	93425	X
23107	82S10 (45 ns)	
23107	93415 (45 ns)	
23108	93425A	X
23108	82S11 (45 ns)	
23109	93412 (60 ns)	
23110	93422 (60 ns)	
23111	93L412 (75 ns)	
23112	93L422	X
23113	93L425A (50 ns)	
23114	93422A (45 ns)	
23115	93L422A	X
23201	93419	
23301	93470	
23302	93471	
23501	TMS4060*	
23502	TMS4050*	
23503	TMS4060†	
23504	TMS4050†	
23505	MM5280*	
23506	MM5280†	
23601	MCM6605*	
23602	MCM6604A*	
23602	MKB4096*	
23603	MCM6605†	
23604	MCM6604A†	
23604	MKB4096†	
23701	AM9130CFC	
23702	AM9130AFC	
23703	AM9130CFM	
23703	AM9130CDM	
23704	AM9310AFM	
23704	AM9130ADM	
23705	AM91L30CF	
23706	AM91L30AF	
23707	AM91L30CFM	
23707	AM91L30CDM	
23708	AM91L30AFM	
23708	AM91L30ADM	
23709	AM9140CFC	
23710	AM9140AFC	
23711	AM9140CFM	
23711	AM9140CDM	
23712	AM9140AFM	
23712	AM9140ADM	
23713	AM91L40CFC	
23714	AM91L40AFC	
23715	AM91L40CFM	
23715	AM91L40CDM	
23716	AM91L40AFM	
23716	AM91L40ADM	
23801	2147H	X
23802	2114	
23803	2147H	X
23804	2114A	
23805	2147H	X
23806	2148H	X
23807	2147H	X
23901	6508	
23901	54C929	
23902	6518	
23902	54C930	
24001	2117 (200 ns)	X
24001	4116 (250 ns)	X
24002	2117 (250 ns)	X
24002	4116 (250 ns)	X
24401	2164 (1 ms ref)	
24401	4564 (1 ms ref)	
24401	6665 (1 ms ref)	
24401	8264 (1 ms ref)	
24402	2164 (2 ms ref)	
24402	4564 (2 ms ref)	
24402	6665 (2 ms ref)	
24402	8264 (2 ms ref)	
24501	6504	
24502	6514	
26001	AM26S07A	
26002	AM27S03A	
26003	AM27S07	
26004	AM27S03	
30001	54LS00	X
30002	54LS03	X
30003	54LS04	X
30004	54LS05	X
30005	54LS10	X
30006	54LS12	X
30007	54LS20	X
30008	54LS22	X
30009	54LS30	X
30101	54LS73	X
30102	54LS74	X
30103	54LS112	X
30104	54LS113	X
30105	54LS114	X
30106	54LS174	X
30107	54LS175	X
30108	54LS107	X
30109	54LS109	X
30110	54LS76	X
30201	54LS40	X
30202	54LS37	X
30203	54LS38	X
30204	54LS28	X
30301	54LS02	X
30302	54LS27	X
30303	54LS266	X
30401	9LS51	X
30401	54LS51	X
30402	54LS54	X
30402	9LS54	X
30501	54LS32	X
30502	54LS86	X
30601	54LS194	X
30602	54LS195	X
30603	54LS95	X
30604	54LS96	X
30605	54LS164	X
30606	54LS295	X
30607	54LS395	X
30608	54LS165	X
30609	54LS166	X
30701	54LS138	X
30702	54LS139	X
30703	54LS42	X
30704	54LS47	X
30801	54LS181	
30901	54LS151	X
30902	54LS153	X
30903	54LS157	X
30904	54LS158	X
30905	54LS251	X
30906	54LS257	X
30907	54LS258	X
30908	54LS253	X
30909	54LS298	X
31001	54LS11	X
31002	54LS15	X
31003	54LS21	X
31004	54LS08	X
31005	54LS09	
31101	54LS85	X
31201	54LS83A	X
31202	54LS283	X
31301	54LS13	X
31302	54LS14	X
31303	54LS132	X
31401	54LS123	X
31402	54LS221	X
31403	54LS122	X
31501	54LS90	X
31502	54LS93	X
31503	54LS160	X
31504	54LS161	X
31505	54LS168	
31506	54LS169	
31507	54LS192	X
31508	54LS193	X
31509	54LS191	X
31510	54LS92	X
31511	54LS162	X
31512	54LS163	X
31513	54LS190	X
31601	54LS75	X
31602	54LS279	X
31603	54LS259	X
31604	54LS375	X
31701	54LS124	
31702	54LS324	
31703	54LS629	
31704	54LS624	
31801	54LS261	
31901	54LS670	X
31902	54LS170	
32001	54LS196	
32002	54LS197	X
32003	54LS290	X
32004	54LS293	X
32102	54LS26	X
32201	54LS365	X
32202	54LS366	X
32203	54LS367	X
32204	54LS368	X
32301	54LS125	X
32302	54LS126	X
32401	54LS240	X
32402	54LS241	X
32403	54LS244	X
32501	54LS273	X
32502	54LS373	X
32503	54LS374	X
32504	54LS377	X
32505	54LS363	
32601	54LS155	X
32602	54LS156	X
32701	54LS390	X
32702	54LS393	X
32703	54LS490	X
32801	54LS242	X
32802	54LS243	X
32803	54LS245	X
32804	54LS640	
32805	54LS641	
32806	54LS642	
32807	54LS645	
32901	54LS280	X
33001	54F00	
33002	54F04	
33003	54F10	
33004	54F20	
33106	25LS174	X
33107	25LS175	X
33201	54F240	
33202	54F241	
33203	54F244	
33301	54F02	X
33401	54F64	X
33501	54F32	X
33601	54F194	
33701	54F138	
33702	54F139	
33901	54F151	
33902	54F153	
33903	54F157	
33904	54F158	
33905	54F251	
33906	54F257	
33907	54F258	
33908	54F253	
33909	54F352	
33910	54F353	
34001	54F08	X
34002	54F11	X
34101	54F074	
34102	54F109	
34103	54F112	
34104	54F175	
34105	54F374	
34106	54F534	
34501	54F086	
34601	54F533	
36001	54LS148	X
36002	54LS348	X
40001	6800	
40101	MC6821	
40201	6810	
40301	2316E	
40301	2616	
40301	3516F	
40301	52116	
40301	68316B	
40301	68A316E	
40301	9218	
40301	MK34000	
40301	S6831B	
40302	6831B	
42001	8080A	X
42201	54LS424	
42101	8212	
42101	54S412	
42201	8224	
42301	8228	
42301	54LS428	
44001	2901A	
44101	2905	
44101	54LS905	
44102	2906	
44102	54LS906	
44103	2907	
44103	54LS907	
44104	2915	
44104	54LS915	
44105	2916	
44105	54LS916	
44106	2917	
44106	54LS917	
44201	2918	
44301	2909	
44401	2914	
44501	2910	
46001	9900A	
46501	9989	
47001	1802	
47101	1821	
47102	1822	
47201	1832	
47301	1852	
47401	1853	
47601	1856	
47602	1857	
48001	Z80A	X
48002	Z80	X
48003	Z80B	
48101	Z80A S10/2	
48102	Z80 S10/2	
48201	Z80A DMA	
48202	Z80 DMA	
48301	Z80A CTC	
48302	Z80 CTC	
48401	Z80A PIO	
48402	Z80 PIO	
49001	8048	
49002	8035L	
50001	TDC 1008JM	
50002	TDC 1009JM	
50003	TDC 1010JM	
50004	MPY8HJM	
50005	MPY12HJM	
50006	MPY16HJM	
50007	MPY23HJM	
50101	HD15530	
50201	82S101	
50201	93458	
50202	82S100	
50202	93459	
50301	PAL10H8	X
50302	PAL12H6	
50303	PAL14H4	X
50304	PAL16H2	
50305	PAL16C1	
50306	PAL10L8	X
50307	PAL12L6	
50308	PAL14L4	
50309	PAL16L2	
50401	PAL16L8	
50402	PAL16R8	
50403	PAL16R6	
50404	PAL16R4	
50405	PAL16X4	
50406	PAL16A4	
52001	Z8001	
52002	Z8002	X
52003	Z8001A	
52004	Z8002A	X
53001	8086	X

NOTE: Items marked X in the QPL column are listed on QPL-38510-56 with at least one source. * 85°C Max. † 100°C Max.

MILITARY PARTS DIRECTORY

Detailed Product Information on Military Parts Provided by:

INMOS 501
Micro Power Systems 503
National Semiconductor 504
Raytheon 508
RCA 510
Seeq 513
Signetics 521
Synertek 535
Texas Instruments 536
Xicor 547

DIGITAL

ARITHMETIC FUNCTIONS

Device	M38510/	Description	Source
4008A	05401	4-Bit Full Adder	SSS
5482	00601	2-Bit Binary Full Adder	Motorola
5483	00602	4-Bit Binary Full Adder (Look-Ahead Carry)	Fairchild, Motorola, National, Signetics, TI
5485	15001	4-Bit Magnitude Comparator	Motorola, Signetics
54181, 9341	01101	Arithmetic Logic/ Function Generator	Motorola, National, Signetics
54182	01102	Look-Ahead Carry Generator	Motorola
54LS83A	31201	4-Bit Binary Full Adder	Fairchild, Motorola, TI
54LS85	31101	4 Bit Magnitude Comparator	Fairchild, Motorola, Signetics, TI
54LS283	31202	4 Bit Binary Full Adder	Fairchild, Motorola, TI
54S85	08201	4-Bit Magnitude Comparator	Signetics
54S181	07801	ALU/Function Generator	Signetics
9324	15002	4-Bit Magnitude Comparator	Motorola

BUFFERS, INVERTERS

4007A	05301	Dual Complementary Pair plus Inverter	National, RCA, SSS
4009A	05501	Hex Buffer/Converter, Inverting	SSS
4010A	05502	Hex Buffer/Converter, Non-Inverting	SSS
4049A	05503	Hex Buffer/Converter, Inverting	Motorola, National, RCA, SSS
4050A	05504	Hex Buffer/Converter, Non-Inverting	Motorola, National, RCA, SSS
4069UB	17401	Hex Inverter	RCA
4502B	17403	Hex Inverter/Buffer	RCA
5404	00105	Hex Inverter	Fairchild, Motorola National, Signetics, TI
5405	00108	Hex Inverter, O/C	Motorola, National, TI
5437	00302	Quad 2-Input NAND Buffer	Fairchild, Motorola, National, TI
5438	00303	Quad 2-Input NAND Buffer, O/C	Motoral, National, TI
5440	00301	Dual 4-Input NAND Buffer	Fairchild, Motorola National, TI
54126	15302	Quad Gated Buffer, TS	Signetics
54365	16301	Hex Buffer, TS	Signetics
54366	16302	Hex Inverter, TS	Signetics
54367	16303	Hex Buffer, Three State	Signetics
54368	16304	Hex Inverter, TS	Signetics
54H04	02305	Hex Inverter	Fairchild, Motorola, TI
54H40	02401	Dual 4-Input NAND Buffer	Motorola, TI
54LS04	30003	Hex Inverter	Fairchild, Motorola, National, Signtelcs, TI
54LS05	30004	Hex Inverter, O/C	Fairchild, Motorola, National, TI
54LS28	30204	Quad 2-Input NOR Buffer	Motorola
54LS37	30202	Quad 2-Input NAND Buffer	Motoroa, National Signetics, TI
54LS40	30201	Dual 4-Input NAND Buffer	Motorola, National, TI
54LS125	32301	Quad Gated Buffer, TS	Motorola, Signetics, TI
54LS126	32302	Quad Gated Buffer, TS	Motoroia, TI
54LS365	32201	Hex Buffer, TS	Fairchild, Motorola, National, Signetics, TI
54LS366	32202	Hex Inverter, TS	Fairchild, Motorola, TI
54LS367	32203	Hex Buffer, TS	Fairchild, Motorola, National, Signetics, TI
54LS368	32204	Hex Inverter, TS	Fairchild, Motorola, Signetics, TI

BUFFERS (cont)

Device	M38510/	Description	Source
54L04	02005	Hex Inverter	National
54S04	07003	Hex Inverter	Fairchild, Signetics, TI
54S05	07004	Hex Inverter, O/C	TI
54S40	07201	Dual 4-Input NAND Buffer	Fairchild, Signetics
935	03002	Hex Inverter	Fairchild
936	03003	Hex Inverter	Fairchild

COUNTERS

4017A	05601	Decade Counter/ Divider, Decoded Output	National, RCA, SSS
4018A	05602	Presettable Divide-by-N Counter	Motorola, National,
4020A	05603	14-Bit Binary Counter	Motorola, National, RCA
4022A	05604	Divide-by-8 Counter/ Divider, Decoded Output	National, RCA, SSS
4024A	05605	7-Bit Binary Counter	Motorola, National, RCA, SSS
5490	01307	Decade Counter, Ripple	Motorola, National
5492	01301	Divide-by-12 Counter (÷2, ÷6)	Motorola
5493	01302	4-Bit Binary Counter	Motorola, Signetics
54160	01303	Synchronous Decade Counter	Motorola, National, Signetics
54161	01306	Synchronous 4-Bit Binary Counter	Motorola, National, Signetics, TI
54162	01305	Fully Synchronous Decade Counter	Motorola, National
54163	01304	Fully Synchronous 4-Bit Binary Counter	Motorola, National, Signetics
54192	01308	Decade Up/Down	Motorola
54193	01309	Decade Up/Down	Motorola, Signetics
54LS90	31501	Decade Counter	Motorola, Signetics, TI
54LS92	31510	Divide-by-12 Counter	Motorola, Signetics, TI
54LS93	31502	4-Bit Binary Counter	Signetics, TI
54LS160	31503	Synchronous Decade Counter	Motorola, TI
54LS161	31504	Synchronous 4-Bit Binary Counter	AMD, Motorola, Signetics, TI
54LS162	31511	Fully Synchronous Decade Counter	Motorola, TI
54LS163	31512	Fully Synchronous 4-Bit Binary Counter	Motorola, Signetics, TI
54LS190	31513	Synchronous Decade Up/Down Counter	Motorola, Signetics, TI
54LS191	31509	Synchronous Binary Up/Down Counter	Motorola, Signetics, TI
54LS192	31507	Decade Up/Down Counter	Motorola, Signetics, TI
54LS193	31508	Binary Up/Down Counter	Fairchild, Motorola, Signetics, TI
54LS197	32002	Binary Up Counter	Signetics
54LS290	32003	Decade Counter, Divide-by-2 and 5	Motorola, Signetics, TI
54LS390	32701	Dual Decade Counter, Ripple	TI
54LS293	32004	4-Bit Binary Counter, Ripple	Signetics, TI
54LS393	32702	Dual 4-Bit Binary Counter, Ripple	Signetics, TI
54LS490	32703	Dual Decade Counter, Ripple	Signetics, TI
54L90	02501	Decade Counter, Ripple	National
54L93	02502	4-Bit Binary Counter	National

DECODERS

5442	01001	BCD-to-Decimal Decoder	Fairchild, Motorola, National, Signetics
5445	01004	BCD-to-Decimal Decoder, O/C	Motorola
5446	01006	BCD-to-Decimal Decoder/Driver, 30V Output	National
5447	01007	BCD-to-Decimal Decoder/Driver, 15V Output	National
5448	01008	BCD-to-7 Segment Decoder/Driver with 30V Output	Motorola
54145	01005	BCD-to-7 Segment Decoder	Motorola
54154, 9311	15201	4-Line to 16-Line Decoder/Demultiplexer	Motorola, Signetics
54155	15202	Dual 2-Line to 4-Line Decoder/Demultiplexer	Motorola

BASED ON QPL-38510-56, 28 JUNE 1983

© IC MASTER 1984

DECODERS (cont)

Device	M38510/	Description	Source
54155	15202	Dual 2-Line to 4-Line Decoder/Demultiplexer	Motorola
54156	15203	Dual 2-Line to 4-Line Decoder/Demultiplexer	Motorola
54LS138	30701	3-to-8-Line Decoder/ Demultiplexer	Fairchild, Motorola, National, Raytheon, Signetics, TI
54LS139	30702	Dual 2-Line to 4-Line Decoder/Demultiplexer	Fairchild, Motorola, National, Signetics, TI
54LS148	36001	8-Input Priority Encoder	TI
54LS155	32601	Dual 2-to-4 Line Decoder/Demultiplexer	Motorola, TI
54LS156	32602	Dual 2-to-4 Line Decoder/Demultiplexer	Motorola, Signetics, TI
54LS348	36002	8-Input Priority Encoder	TI
54LS42	30703	BCD to Decimal Decoder	Fairchild, Motorola, Signetics, TI
54LS47	30704	BCD to7-Segment Decoder	TI
54S139	07702	Dual 2-Line to 4-Line Decoder/Demultiplexer	Fairchild
9301	15206	BCD-to-Decimal Decoder	Motorola
9318	15603	8-Input Priority Encoder	Motorola

DRIVERS

5406	00801	Hex Inverter Buffer/ Driver, O/C High Voltage Output	Motorola, National, TI
5407	00803	Hex Buffer/Driver, O/C High Voltage Output	Motorola, National, TI
5416	00802	Hex Inverter Buffer/ Driver, O/C High Voltage Output	Fairchild, Motorola, National, TI
5417	00804	Hex Buffer/Driver, O/C High Voltage Output	Fairchild, Motorola, TI
5426	00805	Quad 2-Input NAND Buffer/Driver, O/C, High Voltage Output	Signetics

FLIP-FLOPS

25LS174	33106	Hex D-Type Flip-Flop	Motorola, TI
25LS175	33107	Quad D-Type Flip-Flop	Motorola
4013A	05101	Dual "D" Flip-Flop with Set/Reset	Motorola, National, RCA, SSS
4027A	05102	Dual J-K Master-Slave Flip-Flop	Motorola, National, RCA, SSS
5470	00206	Positive Edge-Triggered J-K Flip-Flop	Motorola, TI
5472	00201	J-K Master Slave Flip-Flop (AND Inputs)	National, TI
5473	00202	Flip-Flop Dual J-K Master Slave	Motorola, National, Signetics, TI
5474	00205	Dual D-Type Edge-Triggered Flip-Flop	Fairchild, Motorola, National, Signetics, TI
5476	00204	Dual J-K Master Slave Flip-Flop with Preset and Clear	National, Signetics, TI
54107	00203	Dual J-K Master Slave Flip-Flop	Motorola, National, TI
54174	01701	Hex D-Type Flip-Flop	Fairchild, Motorola, Signetics, TI
54175	01702	Quad D-Type Flip-Flop	Fairchild, Motorola, Signetics, TI
54H72	02201	J-K Master-Slave Flip-Flop (AND Inputs)	Motorola
54H76	02204	Dual J-K Flip-Flop	TI
54H101	02205	J-K Negative Edge-Triggered Flip-Flop (AND-OR Inputs)	Motorola
54H103	02206	Dual J-K Negative Edge-Triggered Flip-Flop	Motorola
54LS73	30101	Dual J-K Master Slave Flip-Flop	Motorola, Signetics, TI
54LS74	30102	Dual D-Type Positive Edge-Triggered Flip-Flop with Preset and Clear	Fairchild, Motorola, Signetics, TI
54LS76	30110	Dual J-K-Master Slave Flip-Flop with Preset and Clear	Motorola, Signetics, TI
54LS107	30108	Dual Master Slave Flip-Flop	Motorola, Signetics, TI
54LS109	30109	Dual J-K Positive Edge-Triggered Flip-Flop with Preset and Clear	Fairchild, Motorola, National, Signetics, TI
54LS112	30103	Dual J-K Negaive Edge-Triggered Flip-Flop with Preset and Clear	Fairchild, Motorola, National, Signetics, TI

BASED ON QPL-38510-56, 28 JUNE 1983

FLIP-FLOPS (cont)

Device	M38510/	Description	Source
54LS113	30104	Dual J-K Negative Edge-Triggered Flip-Flop with Separate Preset and Clock	Fairchild, Motorola, Signetics, TI
54LS114	30105	Dual J-K Negative Edge-Triggered Flip-Flop with Clock, Clear, and Preset	Fairchild, Motorola, TI
54LS174	30106	Hex D-Type Flip-Flop	AMD, Fairchild, Motorola, National, Signetics, TI
54LS175	30107	Quad D-Type Edge-Triggered Flip-Flop with Clear	AMD, Fairchild, Motorola, Raytheon, Signetics, TI
54LS273	32501	Octal D-Type Edge-Triggered Flip-Flop with Clear	Motorola, Signetics, TI
54LS298	30909	Quad D-Type Flip-Flop with Multiplexed Dual inputs	Signetics
54LS373	32502	Octal Transparent Latch	TI
54LS374	32503	Octal D-Type Edge-Triggered Flip-Flop, Three State	TI
54LS377	32504	Octal D-Type Flip-Flop with Enable	Motorola, TI
54L71	02101	J-K Master-Slave Flip-Flop (AND-OR Inputs)	National
54L72	02102	J-K Master-Slave Flip-Flop (AND Inputs)	National
54L73	02103	Dual J-K Master-Slave Flip-Flop	National
54L74	02105	Dual D-Type Edge-Triggered Flip-Flop	National
54L78	02104	Dual J-K Master-Slave Flip-Flop	National
54S74	07101	Dual Flip-Flop	Fairchild, Signetics
54S112	07102	Dual J-K Negative Edge-Triggered Flip-Flop	Signetics
54S113	07103	Dual J-K Negative Edge-Triggered Flip-Flop Separate Preset and Clock	Signetics
54S174	07105	Hex D-Type Flip-Flop	AMD, Fairchild
54S175	07106	Quad D-Type Flip-Flop	AMD, Fairchild
10531	06101	Dual "D" Master Slave Flip-Flop	Motorola
10576	06103	Hex "D" Master Slave Flip-Flop	Motorola
10535	06104	Dual J-K Master-Slave Flip-Flop	Motorola
10631	06102	Dual "D" Master Slave Flip-Flop	Motorola

GATES, AND/NAND

4011A	05001	Quad 2-Input NAND Gate	Motorola, National, RCA, SSS
4012A	05002	Dual 4-Input NAND Gate	Motorola, National, RCA, SSS
4023A	05003	Triple 3-Input NAND Gate	Motorola, National, RCA, SSS
4073B	17003	Triple 3-Input AND Gate	Motorola, RCA
4081B	17001	Quad-2-Input AND Gate	Motorola, RCA, SSS
4082B	17002	Dual 4-Input AND Gate	Motorola, RCA
5400	00104	Quad 2-Input NAND Gate	Fairchild, Motorola, National, Signetics, TI
5401	00107	Quad-2-Input NAND Gate, O/C	Motorola, National, TI
5403	00109	Quad 2-Input NAND Gate, O/C	Motorola, National, TI
5408	01601	Quad 2-Input AND Gate	Fairchild, Motorola, National
5409	01602	Quad 2-Input AND Gate, O/C	Fairchild, Motorola
5410	00103	Triple 3-Input NAND Gate	Fairchild, Motorola National, Signetics, TI
5412	00106	Triple 3-Input NAND Gate, O/C	TI
5420	00102	Dual 4-Input NAND Gate	Fairchild, Motorola, National,Signetics, TI
5426	00805	Quad 2-Input NAND Gate, O/C	Signetics
5430	00101	8-Input NAND Gate	Fairchild, Motorola, National, TI
54F08	34001	Quad 2-Input AND Gate	Fairchild
54F11	34002	Triple 3-Input AND Gate	Fairchild
54H00	02304	Quad 2-Input NAND Gate	Fairchild, Motorola, TI
54H01	02306	Quad 2-Input NAND Gate, O/C	Motorola, TI
54H08	15501	Quad 2-Input AND Gate	Motorola
54H10	02303	Triple 3-Input NAND Gate	Fairchild, Motorola, TI

© IC MASTER 1984

GATES, AND/NAND (cont)

Device	M38510/	Description	Source
54H08	15501	Quad 2-Input AND Gate	Motorola
54H10	02303	Triple 3-Input NAND Gate	Fairchild, Motorola, TI
54H11	15502	Triple 3-Input AND Gate	Motorola
54H20	02302	Dual 4-Input NAND Gate	Fairchild, Motorola, TI
54H21	15503	Dual 4-Input AND Gate	Motorola
54H30	02301	8-Input NAND Gate	Fairchild, Motorola, TI
54LS00	30001	Quad 2-Input NAND Gate	Fairchild, Motorola, National, Signetics, TI
54LS03	30002	Quad 2-Input NAND Gate, O/C	Fairchild, Motorola, National, TI
54LS08	31004	Quad 2-Input AND Gate	Fairchild, Motorola, National, Signetics, TI
54LS10	30005	Triple 3-Input NAND Gate	Fairchild, Motorola, National, Signetics, TI
54LS11	31001	Triple 3-Input AND Gate	Fairchild, Motorola, National, TI
54LS12	30006	Triple 3-Input NAND Gate, O/C	Motorola, National, Signetics, TI
54LS15	31002	Triple 3-Input AND Gate, O/C	Motorola, National, TI
54LS20	30007	Dual 4-Input NAND Gate	Fairchild, Motorola, National, Signetics, TI
54LS21	31003	Dual 4-Input AND Gate	Fairchild, Motorola, National, TI
54LS22	30008	Dual 4-Input NAND Gate, O/C	Fairchild, Motorola, National, TI
54LS26	32102	Quad 2-Input NAND O/C to 15V	Motorola, TI
54LS30	30009	8-Input NAND Gate	Fairchild, Motorola, National, TI
54LS38	30203	Quad 2-Input NAND Gate, O/C	Motorola, National, TI
54L00	02004	Quad 2-Input NAND Gate	National
54L03	02006	Quad 2-Input NAND Gate, O/C	National
54L10	02003	Triple 3-Input NAND Gate	National
54L20	02002	Dual 4-Input NAND Gate	National
54L30	02001	8-Input NAND Gate	National
54S00	07001	Quad 2-Input NAND Gate	Fairchild,Signetics, TI
54S03	07002	Quad 2-Input NAND Gate, O/C	TI
54S08	08003	Quad 2-Input AND Gate	Fairchild, Signetics
54S09	08004	Quad 2-Input AND Gate, O/C	Fairchild
54S10	07005	Triple 3-Input NAND Gate	Fairchild, Signetics, TI
54S11	08001	Triple 3-Input AND Gate	Fairchild,Signetics
54S20	07006	Dual 4-Input NAND Gate	Fairchild, TI
54S22	07007	Dual 4-Input NAND Gate, O/C	TI
54S30	07008	8 Input NAND Gate	TI
54S133	07009	13-Input NAND Gate	Fairchild,Signetics
930	03001	Dual 4-Input NAND Gate, Expandable, DTL	Fairchild
935	03002	DTL Hex Inverter	Fairchild
940	03002	DTL Logic Gate	Fairchild
946	03004	Quad 2-Input NAND Gate, DTL	Fairchild
962	03005	Triple 3-Input NAND Gate, DTL	Fairchild
10504	06201	Quad 2-Input NAND Gate	Motorola
10597	06202	Hex AND Gate	Motorola

GATES, AND-OR/AND-OR-INVERT

4019A	05302	Quad AND-OR Select Gate	National, RCA, SSS
4019B	05352	Quad AND/OR Select Gate	SSS
4085	17201	Dual 2-Wide 2-Input AOI	RCA
4086	17202	4-Wide 2-Input AOI Gate, Expandable	RCA
5450	00501	2-2-Input AOI Gate, Expandable	Motorola, National, TI
5451	00502	2-2-Input AOI Gate, Expandable	Motorola, National, TI
5453	00503	2-2-2-2-Input AOI Gate, Expandable	National, TI
5454	00504	2-2-2-2-Input AOI Gate	National, TI
54F64	33401	4-2-3-2 Input AOI Gate	Fairchild
54H50	04001	2-2-Input AOI Gate, Expandable	Motorola

GATES, AND-OR/AND-OR-INVERT (cont)

Device	M38510/	Description	Source
54H51	04002	Dual 2-2-Input AOI Gate	Motorola
54H53	04003	2-2-2-3-Input AOI Gate, Expandable	Motorola
54H54	04004	2-2-2-3-Input AOI Gate	Motorola
54H55	04005	4-4-Input AOI Gate, Expandable	Motorola
54LS51	30401	Dual 2-2-Input AOI Gate	Fairchild, Motorola, National, TI
54LS54	30402	2-2-2-3-Input AOI Gate	Fairchild, Motorola, National, TI
54S51	07401	2-2-Input AOI Gate	Fairchild, Signetics
54S64	07402	4-2-3-2-Input AOI Gate	Fairchild

GATES, EXCLUSIVE OR/NOR

4030A	05303	Quad Exclusive OR Gate	Motorola, National, SSS
4070B	17203	Quad Exclusive OR Gate	Motorola, RCA
4077B	17204	Quad Exclusive OR Gate	RCA
5486	00701	Quad 2-Input Exclusive OR Gate	Fairchild, Motorola, National, Signetics, TI
54L86	02601	Quad 2-Input Exclusive OR Gate	National
54LS86	30502	Quad 2-Input Exclusive OR	Motorola, National, Signetics, TI
54LS266	30303	Quad 2-Input Exclusive NOR Gate, O/C	Fairchild, Motorola, National, Signetics, TI
54S86	07501	Quad 2-Input Exclusive OR Gate	Signetics
10507	06005	Triple 2-Input Exclusive OR/NOR Gate	Motorola

GATES, OR/NOR

4000A	05201	Dual 3-Input NOR Gate plus Inverter	RCA, SSS
4001A	05202	Quad-2-Input NOR Gate	Motorola, National, RCA, SSS
4002A	05203	Dual 4-Input NOR Gate	Motorola, National, RCA, SSS
4025A	05204	Triple 3-Input NOR Gate	Motorola, National, RCA, SSS
4071B	17101	Quad 2-Input OR Gate	RCA, SSS
4072B	17102	Dual 4-Input OR Gate	RCA
4075B	17103	Triple 3-Input OR Gate	RCA
5402	00401	Quad 2-Input NOR Gate	Fairchild, Motorola, National, TI
5423	00402	Dual 4-Input NOR Gate with Strobe, Expandable	Motorola, TI
5425	00403	Dual 4-Input NOR Gate with Strobe	Motorola, TI
5427	00404	Triple 3-Input NOR Gate	Fairchild, Motorola, TI
5432	16101	Quad 2-Input OR Gate	Signetics
54F02	33301	Quad 2-Input NOR Gate	Fairchild
54F32	33501	Quad 2-Input OR Gate	Fairchild
54LS02	30301	Quad 2-Input NOR Gate	Fairchild, Motorola, National, Signetics, TI
54LS27	30302	Triple 3-Input NOR Gate	Fairchild, Motorola, National, TI
54LS32	30501	Quad 2-Input OR Gate	Fairchild, Motorola, National, Signetics, TI
54L02	02701	Quad 2-Input NOR Gate	National
54S02	07301	Quad 2-Input NOR Gate	Fairchild, Signetics
10501	06001	Quad 2-Input OR/NOR Gate	Motorola
10502	06002	Quad 2-Input Gate (3 NOR, 1 OR/NOR)	Motorola
10505	06003	2-3-2-Input OR/NOR Gate	Motorola
10506	06004	4-3-3 Input OR/NOR Gate	Motorola
10509	06006	4-5-Input OR/NOR Gate	Motorola

LATCHES

4099B	17601	8-Bit Addressable Latch	RCA
4043A	05103	Quad NOR R/S Latch	SSS
5475	01501	Complementary Output	Motorola, Signetics
5477	01502	Quad Bistable Latch	Motorola
54116	01503	Dual 4-Bit Latch with Clear	Signetics
54LS75	31601	Quad Bistable Latch	Signetics, TI
54LS259	31603	8-Bit Addressable Latch	Motorola, TI
54LS279	31602	Quad Set Reset Latch	Fairchild, Motorola, Signetics, TI
54LS373	32502	8-Bit Latch, Transparent D-Type, Three State	TI
54LS375	31604	Quad Bistable Latch	Motorola, Signetics, TI

BASED ON QPL-38510-56, 28 JUNE 1983

© IC MASTER 1984

LATCHES (cont)

Device	M38510/	Description	Source
9314	01504	Quad Multifunction Latch	Motorola

MULTIPLEXERS

54150	01401	16-Channel Data Selector/Multiplexer	Motorola
54151	01406	8-Input Multiplexer	Fairchild, Motorola, National, Signetics
54153	01403	Dual 4-Channel Data Selector/Multiplexer	Fairchild, Motorola, National, Signetics
54LS151	30901	8-Input Multiplexer	Fairchild, Motorola, National, TI
54LS153	30902	Dual 4-Channel Data Selector/Multiplexer	Fairchild, Motorola, National, Signetics, TI
54LS157	30903	Quad 2-Input Multiplexer, Non-Inverting	Fairchild, Motorola, National, TI
54LS158	30904	Quad 2-Input Multiplexer, Inverting	Fairchild, Motorola, National, TI
54LS251	30905	8-Input Multiplexer, Complemetary Input, Strobe, TS	AMI, TI
54LS253	30908	Dual 4-Input Multiplexer, TS	Fairchild, Motorola, National, TI
54LS257	30906	Quad 2-Input Multiplexer, Non-Inverting, TS	Fairchild, Motorola, National, Signetics, TI
54LS258	30907	Quad 2-Input Multiplexer, Inverting, TS	Fairchild, Motorola, Signetics, TI
54S151	07901	8-Input Multiplexer	Fairchild, Signetics
54S153	07902	Dual 4-Channel Data Selector/Multiplexer	Fairchild, Signetics
54S157	07903	Quad 2-Input Multiplexer, Non-Inverting	Fairchild, Signetics
54S158	07904	Quad 2-Input Multiplexer, Inverting	Fairchild, Signetics
9309	01404	Dual 4-Input Multiplexer	Fairchild, Motorola, Signetics
9312	01402	8-Channel Data Selector/Multiplexer	Motorola
54157, 9322	01405	Quad 2-Input Data Selector/Multiplexer (Non-Inverting)	Fairchild, Motorola, National, Signetics

MULTIVIBRATORS

4098B	17504	Dual Monostable Multivibrator, Retriggerable	RCA
54121	01201	Monostable Multivibrator	Fairchild, Motorola, Signetics
54122	01202	Retriggerable Monostable Multivibrator with Clear	Fairchild, Motorola
54123	01203	Retriggerable Monostable Multivibrator with Clear	Fairchild, Motorola, Signetics
54LS122	31403	Dual Retriggerable Monostable Multivibrator with Clear	Motorola, TI
54LS123	31401	Dual Retriggerable Monostable Multivibrator with Clear	Motorola, TI
54LS221	31402	Dual Monostable Multivibrator, Schmitt Trigger Input	Motorola, TI
9601	01204	One Shot Multivibrator	Fairchild, Motorola
9602	01205	Dual One Shot Multivibrator	Fairchild, Motorola

MISCELLANEOUS

5413	15101	Dual 4-Input NAND Schmitt Trigger	Motorola
5414	15102	Hex Schmitt Trigger, Inverting	Motorola
54132	15103	Quad 2-Input NAND Schmitt Trigger	Motorola, Signetics
54180	01901	9-Bit Odd/Even Parity Generator/Checker	Motorola, National, Signetics
54LS13	31301	Dual 4-Input NAND Schmitt Trigger	Motorola, TI
54LS14	31302	Hex Schmitt Trigger, Inverting	Motorola, Signetics, TI
54LS240	32401	Octal Bus Driver, Schmitt Trigger, Inverting	Motorola, Signetics, TI
54LS241	32402	Octal Bus Driver, Schmitt Trigger, Non-Inverting	Motorola, TI
54LS242	32801	Quad Bus Transceiver	TI
54LS243	32802	Quad Bus Transceiver	TI

MISCELLANEOUS (cont)

Device	M38510/	Description	Source
54LS244	32403	Octal Bus Driver, Schmitt Trigger, Non-Inverting, Three State	Motorola, TI
54LS245	32803	Octal Bus Transceiver, Three State	TI
54LS132	31303	Quad 2-Input NAND Schmitt Trigger	Motorola, Signetics, TI
54LS280	32901	9-Bit Odd/Even Parity Generator Checker	TI
10524	06301	Quad TTL to ECL OR/NOR Translator	Motorola
10525	06302	Quad ECL to TTL Translator	Motorola

INTERFACE

ANALOG SWITCHES

DG181	11101	2xSPST, JFET	Intersil, Siliconix
DG182	11102	2xSPST, JFET	Siliconix
DG184	11103	2xDPST, JFET	Siliconix
DG185	11104	2xDPST, JFET	Siliconix
DG187	11105	SPDT, JFET	Siliconix
DG188	11106	SPDT, JFET	Siliconix
DG190	11107	2xSPDT, JFET	Intersil, Siliconix
DG191	11108	2xSPDT, JFET	Intersil, Siliconix
DG300	11601	2 x SPST, CMOS	Siliconix
DG302	11603	2 x DPST, CMOS	Siliconix
DG303	11604	2 x SPDT, CMOS	Siliconix
DG304	11605	2 x SPST, CMOS	Siliconix
DG305	11606	SPDT, CMOS	Siliconix
DG306	11607	2 x DPST, CMOS	Siliconix
DG307	11608	2 x SPDT, CMOS	Siliconix
4016A	05801	4 x SPST, CMOS	Motorola, SSS
4066A	05802	4xSPST, CMOS	Motorola

D/A CONVERTERS

DAC-08A	11302	D/A Converter, 8-Bit	PMI
DAC-08	11301	D/A Converter, 8-Bit	PMI

LINE DRIVERS AND RECEIVERS

54S140	08101	Dual 4-Input Positive NAND Line Driver	Fairchild, Signetics
55107	10401	Differential Line Receiver	Fairchild, Motorola, TI
55108	10402	Differential Line Receiver	TI
55113	10405	Dual Differential Line Driver, Three-State	TI
55114, 9614	10403	Dual Differential Line Driver	Fairchild, TI
55115, 9615	10404	Dual Differential Line Receiver	Fairchild, TI

LINEAR

AMPLIFIERS

LM101A	10103	Operational Amplifier	AMD, Fairchild, National Raytheon, Signetics
LM108A	10104	Operational Amplifier	Fairchild, National, PMI
LM118	10107	Operational Amplifier	AMD, National
1558	10108	Dual Operational Amplifier	Fairchild
741	10101	Operational Amplifier	AMD, Fairchild, National, Raytheon
747	10102	Dual Operational Amplifier	AMD, Fairchild, National, Raytheon
LH2101A	10105	Dual Operational Amplifier	AMD, Raytheon, Signetics
HA2500	12204	Operational Amplifier	Harris
HA2510	12205	Operational Amplifier	Harris
HA2520	12206	Operational Amplifier	Harris
HA2600	12202	Operational Amplifier	Harris
HA2620	12203	Operational Amplifier	Harris
4136	11004	Quad Operational Amplifier	Fairchild, Raytheon
PM2108A	10106	Dual Operational Amplifier	PMI
LM124	11005	Quad Operational Amplifier	Fairchild
LM148	11001	Quad Operational Amplifier	Fairchild, Raytheon

BASED ON QPL-38510-56, 28 JUNE 1983

© IC MASTER 1984

AMPLIFIERS (cont)

Device	M38510/	Description	Source
PM155	11401	Operational Amplifier	National, PMI
PM155A	11404	Operational Amplifier	PMI
PM156	11402	Operational Amplifier	National, PMI
PM156A	11405	Operational Amplifier	PMI
PM157	11403	Operational Amplifier	PMI
PM157A	11406	Operational Amplifier	PMI
4156	11003	Quad Operational Amplifier	Raytheon
HA4741	11003	Quad Operational Amplifier	Harris

COMPARATORS

111	10304	Voltage Comparator	Fairchild, Raytheon, National
139	11201	Quad Voltage Comparator	AMD, Fairchild, Raytheon
710	10301	Voltage Comparator	Fairchild
LH2111	10305	Dual Voltage Comparator	AMD, Raytheon

TIMERS

555	10901	Timer	Fairchild, Signetics
556	10902	Dual Timer	Signetics

TRANSISTOR ARRAYS

3045	10802	Transistor Array	Fairchild

VOLTAGE REGULATORS

LM723	10201	Voltage Regulator	AMD, Fairchild
LM109	10701	Voltage Regulator	Fairchild
7812	10707	Voltage Regulator	Fairchild
7805	10706	Voltage Regulator	Fairchild
78M12	10703	Voltage Regulator	Fairchild
78M15	10704	Voltage Regulator	Fairchild
7815	10708	Voltage Regulator	Fairchild
7824	10709	Voltage Regulator	Fairchild
79M05	11501	Voltage Regulator	Fairchild
7905	11505	Voltage Regulator	Fairchild
7912	11506	Voltage Regulator	Fairchild
7915	11507	Voltage Regulator	Fairchild
79M12	11502	Voltage Regulator	Fairchild
79M15	11503	Voltage Regulator	Fairchild

MEMORY

PROGRAMMABLE LOGIC

PAL10H8	50301	PAL	MMI
PAL14H4	50303	PAL	MMI
PAL10L8	50306	PAL	MMI

PROMs

82S23	20701	32x8, OC	Signetics
82S123	20702	32x8, TS	Signetics
82S115	20803	512x8, TS PROM	Signetics
82S126	20301	256x4, OC	Signetics
82S129	20302	256x4, TS	Signetics
82S185	20902	2048x4 PROM	Harris, Signetics
82S130	20401	PROM, 512x4, OC	Signetics
82S131	20402	PROM, 512x4, TS	Signetics
82S137	20602	1024x4, TS	Signetics
82S141	20802	512x8, TS	Signetics
82S181	20904	1024x8, TS	AMD, Harris, Signetics
82S191	21002	2048x8, TS	Fairchild, Harris, Signetics
82S2708	20905	1024x8, TS	Signetics
HM7602-2	20701	32x8, OC	Harris
HM7603-2	20702	32x8, TS	Harris
HPROM512	20101	64x8 PROM	Harris
HM7610-2	20301	256x4, OC	Harris
HM7611-2	20302	256x4, TS	Harris
HM7620-2	20401	PROM, 512x4, OC	Harris
HM7621-2	20402	PROM, 512x4, TS	Harris
HM7642-2	20601	1024x4, OC	Harris
HM7643-2	20602	1024x4, TS	Harris
HM7640-2	20801	512x8, OC	Harris
HM7641-2	20802	512x8, TS	Harris

PROMs (cont)

Device	M38510/	Description	Source
93Z511	21004	2048x8, TS 45 nsec	Fairchild

RAMs

4116 (200 ns)	24001	16384x1, TS	Mostek
4116 (250 ns)	24002	16384x1, TS	Mostek
2147H (85 ns)	23801	4096 x 1, TS	Intel
2147H (70 ns)	23803	4096 x 1, TS	Intel
2147H (55 ns)	23805	4096 x 1, TS	Intel
2147H (45 ns)	23807	4096 x 1, TS	Intel
2148H	23806	RAM, 1024x4, TS	Intel
93L415	23103	RAM, 1024x1-Bit, OC	Fairchild
93425	23102	RAM, 1024x1-Bit, TS	Fairchild
93L425	23104	RAM, 1024x1-Bit, TS	Fairchild
93425	23106	RAM, 1024x1-Bit, TS	Fairchild
93425A	23108	RAM, 1024x1-Bit, TS	Fairchild
93L422	23112	RAM, 256x4, T.S	Fairchild
93L422A	23115	RAM, 256x4, T.S	Fairchild

SHIFT REGISTERS

4006A	05701	18-Bit Static S.R.	Motorola, National, RCA
4014A	05702	18-Bit Static S.R. (Synchronous)	Motorola, National, RCA
4015A	05703	Dual 4-Bit Static S.R.	Motorola, National, RCA, SSS
4021A	05704	8-Bit Static S.R. Asynchronous	Motorola, National, RCA, SSS
4031A	05705	64-Bit Static S.R.	National, RCA
54L95	02801	4-Bit Parallel Access S.R.	National
5495	00901	4-Bit Parallel Access S.R.	Motorola, National
5496	00902	5-Bit S.R.	Motorola, National, Signetics
54164	00903	8-Bit Serial-In Parallel-Out S.R.	National, Signetics
54165	00904	8-Bit Parallel-Serial S.R.	Motorola
54194	00905	4-Bit Universal S.R.	Motorola, National, Signetics
54195	00906	4-Bit Parallel Access S.R.	Motorola
54LS95	30603	4-Bit Parallel Access S.R.	Fairchild, Signetics, TI
54LS96	30604	5-Bit S.R.	Signetics, TI
54LS164	30605	8-Bit Serial In, Parallel Out, S.R.	Motorola, National, Signetics, TI
54LS165	30608	8-Bit Parallel Load S.R., Complementary Outputs	Motorola, TI
54LS166	30609	8-Bit Parallel-In, Serial-Out S.R.	Motorola, TI
54LS194	30601	4-Bit Universal Bidirectional S.R.	AMD, Fairchild, Motorola, TI
54LS195	30602	4-Bit Parallel In, Parallel Out, S.R.	Motorola, Signetics, TI
54LS295	30606	4-Bit Parallel In, Parallel Out, Right/Left S.R.	Signetics, TI
54LS395	30607	4-Bit Parallel In, Parallel Out, Cascadable S.R.	Signetics, TI
54LS670	31901	4x4 Register File, TS	Motorola
9300	15901	Universal 4-Bit S.R.	Motorola
9328	15902	Dual 8-Bit S.R.	Motorola

MICROPROCESSORS

2901B	44001	Microprocessor	AMD
8080A	42001	Microprocessor	Intel
8086	53001	Microprocessor	Intel
SBP9989	46501	Microprocessor	TI
Z80 CPU	48002	Microprocessor	Zilog
Z80A CPU	48001	Microprocessor	Zilog
Z8002 CPU	52002	Microprocessor	Zilog
Z8002A CPU	52004	Microprocessor	Zilog

BASED ON QPL-38510-56, 28 JUNE 1983

Last Page This Section. Next Page 501

© IC MASTER 1984

High Performance 16K Static RAM (MIL-STD 883 *)

IMS1400M 16Kx1

Features

- Specifications guaranteed over full military temperature range (−55°C to 125°C)
- MIL-STD 883 Processing
- 55 and 70ns Chip Enable Access
- Maximum Active Power 660mW
- Maximum Standby Power 165mW
- Single +5V ± 10% Supply
- $\overline{E}$ Power Down Function
- TTL Compatible Inputs and Output
- Fully Static—No Clocks for Timing
- Three-State Output

Pin Names

A_0-A_{13}	Address Inputs	V_{CC}	Power (+5V)
$\overline{W}$	Write Enable	V_{SS}	Ground
$\overline{E}$	Chip Enable		
D	Data Input		
Q	Data Output		

Logic Symbol

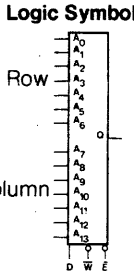

Pin Configuration

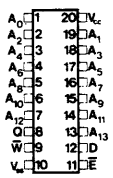

DIP

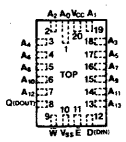

Chip Carrier

Block Diagram

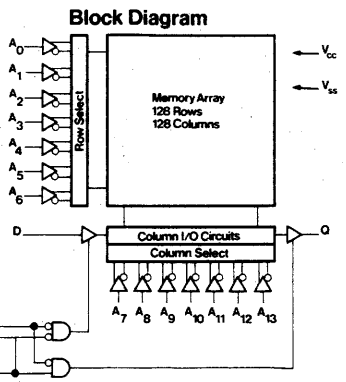

IMS1420M 4Kx4

Features

- Specifications guaranteed over full military temperature range (−55°C to 125°C)
- MIL-STD 883 Processing
- 4K x 4 Bit Organization
- 55 and 70ns Address Access
- 660mW Maximum Power Dissipation
- Fully TTL Compatible
- Common Data Inputs & Outputs
- Single +5V ± 10% Operation
- 55 and 70ns Chip Enable Access
- Power Down Function
- 165mW Maximum Standby Power

Pin Names

A_0-A_{11}	ADDRESS INPUTS	V_{CC}	POWER (+5V)
$\overline{W}$	WRITE ENABLE	V_{SS}	GROUND
$\overline{E}$	CHIP ENABLE		
I/O	DATA IN/OUT		

Logic Symbol

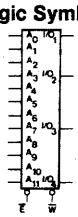

Pin Configuration

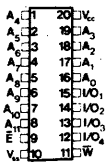

DIP

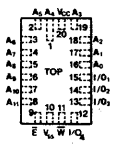

Chip Carrier

Block Diagram

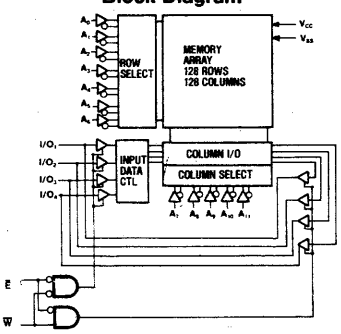

* Refer to INMOS' Engineering Bulletin #1 for exceptions to MIL-STD 883.

Inmos Corporation • P.O. Box 16000 • Colorado Springs, Colorado 80935 • (303) 630-4000 • TWX 910 920 4904
Whitefriars • Lewins Mead • Bristol BSI 2NP • England • Phone Bristol 272 290 861 • TLX: 851-444723

INMOS reserves the right to make changes in specifications at any time and without notice. The information furnished by INMOS in this publication is believed to be accurate. However, no responsibility is assumed for its use; nor for any infringements of patents or other rights of third parties resulting from its use. No license is granted under any patents, trademarks, or other rights of INMOS.

ABBREVIATIONS OF COMPANY NAMES

Action Ins	Action Instruments
AD	Analog Devices
ADT	Advanced Digital Technology
Advent	Advent Products, Inc.
Alphatron	Alphatron
AMA	American Automation
AMD	Advanced Micro Devices
AMI	American Microsystems, Inc.
Amperex	Amperex Electronic Corp.
Analogic	Analogic
Analog Sys	Analog Systems
APC	Applied Micro Circuits
Apex	Apex Microtechnology
APM	Applied Microsystems Corp.
Appl Sys	Applied Systems Corp.
APT	Applied Microtechnology
Aptek	Aptek Microsystems
Array Tech	Array Technology
AWI	AWI Electronics
Barvon	Barvon Research
Bedford	Bedford Computer Systems Inc.
Burr-Brown	Burr-Brown
CAE	Computer Aided Engineering
Cal Devices	California Devices
Cermetek	Cermetek
CGRS	CGRS Microtech Inc.
Cherry	Cherry Semiconductor
CIC	Custom Integrated Circuits
CirTech	Circuit Technology
Citel	Citel
Comlinear	Comlinear Corporation
CMA	Custom MOS Arrays
Comark	Comark Corp.
Comdial	Comdial Semiconductor
Comp Auto	Computer Automation
Compas	Compas Microsystems
Cont Logic	Control Logic Inc.
Control Sys	Control Systems Microsystems Div.
CreMicro	Creative Micro Systems
Cromemco	Cromemco, Inc.
Cubit	Cubit Inc.
Curtis	Curtis Electro Devices, Inc.
Cybernetic	Cybernetic Micro Systems
Cybersys	Cybersystems
Cybertek	Cybertek Inc.
Data General	Data General
Data I/O	Data I/O
Data Trans	Data Translation
Datel	Datel
Datricon	Datricon Corporation
DDC	Data Devices Corporation
DEC	Digital Equipment Corporation
Die-Tech	Die-Tech
Digelec	Digelec Corp.
Digitek	Digitek, Inc.
Dionics	Dionics Inc.
Dist Comp	Distributed Computer Systems
Divers Tech	Diversified Technology
E-HI	E-H International, Inc.
EDI	Electronic Designs Inc.
Elind	Elind Elettronica Industriale
EMM-SESCO	EEM-SESCO
Emulogic	Emulogic Inc.
ETI Micro	ETI Micro
Exar	Exar Integrated Systems
Exel	Exel Microelectronics
Fairchild	Fairchild
Ferranti	Ferranti Electric
Force	Force Computers
Fujitsu A	Fujitsu America
Fujitsu	Fujitsu Microelectronics, Inc.
GI	General Instrument
GTE Micro	GTE Microcircuits
Harris	Harris Semiconductor
Heurikon	Heurikon Corp.
Hilevel	Hilevel Technology, Inc.
Hitachi	Hitachi America, Ltd.
Holt	Holt Inc.
HP	Hewlett-Packard
Hughes	Hughes Aircraft, Solid State Products
Hybrid Sys	Hybrid Systems
HyComp	HyComp
ICC	International Cybernetics
IDT	Integrated Device Technology
IMI	International Microcircuits, Inc.
IMP	International Microelectronic Products
IMS	Industrial MicroSystems Inc.
Infosphere	Infosphere
Inmos	Inmos
IntCirEng	Integrated Circuit Engineering
IntCirSys	Integrated Circuit Systems
IntCompSys	Integrated Computer Systems
Int Tech	Integrated Technology Corp.
Intech	Intech Microcircuits Div.
Intel	Intel
Interdesign	Interdesign
Intersil	Intersil
Intronics	Intronics
ITT	ITT Semiconductors
Kinetic Sys	Kinetic Systems
Kontron	Kontron Electronics
Lambda	Lambda Semiconductor
Linear Tech	Linear Technology
LSI Comp	LSI Computer Systems
LSI Logic	LSI Logic Corporation
Master Logic	Master Logic Corporation
Matrix	Matrix Corp.
Matrox	Matrox Electronic Systems
Maxim	Maxim Integrated Products
MCC	Micro-Computer Control
MCE	MCE Electronics
Micrel	Micrel
Micro Innov	Micro Innovators
Micropac	Micropac Industries
Micro Net	Micro Networks
Micro Pwr	Micro Power Systems
Micro Sci	Micro Sciences Corp.
Micro Tech	Microcircuits Technology
Micro-Link	Micro-Link Corporation
Micron	Micron Technology
MilerTron	MilerTronics
Miller	Miller Technology
Mitel	Mitel Semiconductor
Mitsubishi	Mitsubishi Electronics
MMI	Monolithic Memories, Inc.
Mostek	Monolithic Systems Corp.
Motorola	Mostek
MRC	Motorola Semiconductor
Murray	MRC Systems
Monosil	Murray Consulting
National	National Semiconductor
NCM	NCM Corp.
NCR	NCR Corp., Microelectronics Division
NEC	NEC Electronics
Nitron	Nitron
OAE	Oliver Advanced Engineering
Octagon	Octagon Systems Corp.
OEI	Optical Electronics Inc.
Ohio Sci	Ohio Scientic
OKI	OKI Semiconductor
Omnibyte	Omnibyte Corp.
Onset	Onset Computer Corp.
Panasonic	Panasonic
Pico Design	Pico Design
Polycore	Polycore Electronics
Plessey	Plessey Semiconductors
PMI	Precision Monilithics, Inc.
PragDes	Pragmatic Design Inc.
Pro-Log	Pro-Log Corp.
Quay	Quay Corp.
Raytheon	Raytheon Semiconductor
RCA	RCA Solid State Division
RCI Data	RCI Data
RELMS	Relational Memory Systems
Reticon	Reticon
RIFA	RIFA
Rockwell	Rockwell, Microelectronic Devices
RTC	Riehl Time Corporation
Sanyo	Sanyo
SBE	SBE, Inc.
SEEQ	SEEQ Technology, Inc.
SPI	Semi Processes Inc.
Siemens	Siemens
Si-Fab	Si-Fab
Signetics	Signetics
SGS	SGS Semiconductor
Sharp	Sharp
Silicon G	Silicon General
Siliconix	Siliconix
Silicon Sys	Silicon Systems Inc.
Siltronics	Siltronics
SMC	Standard Microsystems Corp.
S MOS	S MOS Systems
Solarise	Solarise Enterprises
Solitron	Solitron Devices
Sprague	Sprague Electric Company
SSM	Solid State Micro Technology for Music
SSS	Solid State Scientific
Stag	Stag Microsystems
STC	Storage Technology Corp.
STD	STD Microsystems
Struc Des	Structured Design Inc.
Stynetic	Stynetic Systems
Sunrise	Sunrise Electronics
Sunshine	Sunshine Semiconductor
Supertex	Supertex Inc.
Symtek	Symtek Corp.
Synertek	Synertek
Sys Innov	Systems Innovations
Tau Zero	Tau Zero Inc.
Technitrol	Technitrol
Tektronix	Tektronix
Teledyne C	Teledyne Crystalonics
Teledyne P	Teledyne Philbrick
Teledyne S	Teledyne Semiconductor
Telefunken	Telefunken
Telmos	Telmos
Teltone	Teltone Corporation
TI	Texas Instruments
Third Domain	Third Domain
Thomson-CSF	Thomson-CSF Components Corp.
Toshiba	Toshiba America
Trans-Data	Trans-Data
TRW	TRW LSI Products
Unitrode	Unitrode
Universal	Universal Semiconductor, Inc.
Varix	Varix Corp.
VLSI Design	VLSI Design Associates
VTI	VLSI Technology, Inc.
Votrax	Votrax
Weitek	Weitek Corporation
Western	Western Digital
Wintek	Wintek Corp.
Xicor	Xicor, Inc.
Xycom	Xycom
Zendex	Zendex Corp.
Zilog	Zilog
ZyMOS	ZyMOS Corporation
Zytrex	Zytrex Corp.

Military IC's

Note: See other MPS parts in Interface and Linear Sections.

MICRO POWER SYSTEMS - HIGH RELIABILITY (HI-REL)

Micro Power Systems has established standard procedures for manufacturing, screening, qualification, and quality conformance, and is incorporating the requirements of both MIL-STD-883 and MIL-Q-9858. Devices meeting Class B screening requirements of MIL-STD-883 are available as standard catalog items. Requests for devices with other special requirements are invited.

MPS standard "/883" parts designate devices which have been subjected to 100% screening in accordance with Method 5004 of MIL-STD-883, Class B.

Quality Conformance Testing (Groups A, B, C, D) in accordance with Method 5005 of MIL-STD-883 is available on special order.

Additionally, a complete line of monolithic dual transistors, both field effect and bipolar types, screened to the requirements of MIL-S-19500, MIL-STD-750, and MIL-STD-202 are also available as standard catalog items.

100% SCREENING PROCEDURE

SCREEN	MIL-STD-883 METHOD/COND.
1. Internal Visual	2010 Cond. B.
2. Stabilization Bake	1080 Cond. C (24 hrs. min.)
3. Temperature Cycling	1010 Cond. C
4. Constant Acceleration	2001 Cond. E; Y1 plane
5. Seal: (A) Fine	1014 Cond. A or B
(B) Gross	1014 Cond. C
6. Initial Electrical	MPS Specifications
7. Burn-In Test	1015 Cond. A or B 168 hrs. @ +125°C
8. Final Electrical 100% go-no-go	Subgroups A1, A2, A3, A7, Functional tests per Table 1
9. External Visual	2009 Sample Inspection
10. Lot Acceptance	Table 1, Group A Elect. Tests

MILITARY PROGRAMS

- Space Shuttle
- LAMPS
- Cruise Missile
- AWACS
- NEARTIP
- ALQ119, ALQ131
- IR Maverick
- QF100/A300 Airbus
- HG480/280
- Alpha Jet

The following MPS parts are available for "Hi-Rel" Military Applications:

Digital-to-Analog Converters

MP7520, MP7521, MP7522, MP7523, MP7524, MP7528, MP7530, MP7531, MP7533, MP7541, MP7542, MP7543, MP7614, MP7616, MP7621, MP7622, MP7623, MP7645, MP562, MP5520/DAC01, MP8526, MP9331, MP370, MP3140, MP377-18, MP9377-16, MP1208, MP1230

Analog-to-Digital Converters

MP574, MP7550, MP7570, MP7574, MP7581, MP7581A

Precision Voltage References

MP5532/REF01, MP5531/REF02, MP5010, MPREF05, MPREF10

Precision Operational Amplifiers

MP5501/OP01, MP5502/OP02, MP5503/OP03, MP5504/OP04, MP5505/OP05, MP5507/OP07, MP5508/OP08, MP5509/OP09, MP5510/OP10, MP5511/OP11, MP5512/OP12, MP5514/OP14, MP5527/OP27, MP5537/OP37, MPOP207, MPOP227, MP4136, MPLM108/208/308, MPOP2108/2208/2308

Analog Multiplexers*

MP7501, MP7502, MP7503, MP7506, MP7507, MP7508DI, MP7509DI

Analog Switches*

MP7510DI, MP7511DI, MP7512DI, MP200DI, MP201DI

*Note:
Dielectrically isolated Multiplexers and Switches are indicated by "DI" suffix.

MICRO POWER SYSTEMS
3100 Alfred Street
Santa Clara, CA 95050
(408) 727-5350

© IC MASTER 1984

NATIONAL SEMICONDUCTOR MIL-AERO

National Semiconductor offers six basic categories of Military/Aerospace Products. Our support of military standardization is demonstrated in the number of MIL-M-38510 qualified devices we offer. To provide devices of comparable quality and reliability where no MIL-M-38510 specifications exist, we offer a complete line of 883B/RETS™ devices, tested to the most compliant in-house screening program in the industry. The heart of this program is the RETS (Rel Electrical Test Specification) a fully documented and controlled electrical test specification. Our customers can tell exactly what we test. None of our competitors provide this level of visibility.

To meet the more extensive reliability needs of the space community, we offer MIL-M-38510 Class S devices and 883S/RETS™ devices, many of them radiation hardened. We have the products and the screening most major programs need. Let us show how we can meet your needs.

NATIONAL SEMICONDUCTOR RELIABILITY SCREENING FLOWS

	JM38510 Class S	883S/RETS™ Monolithic	883S/RETS Hybrid	JM38510 Class B	883B/RETS™	883B/RETS™ Hybrid
Line Certification	X			X		
Wafer Lot Acceptance	X	X	SEM only			
On Shore Assembly	X	X	from seal onward	X		
Assembly Die-Shear	X	X	X	X	X	X
100% Non-Destructive Bond Pull	X	X	X			
Destructive Bond Pull Sample	X	X	X	X	X	X
Internal Visual	2010A	2010A	2017	2010B	2010B	2017
Stabilization Bake, 1008C	X	X	X	X	X	X
Temperature Cycle, 1010C	X	X	X	X	X	X
Constant Acceleration, 2001E	X	X	relaxed for some packages	X	X	X
Fine Leak, 1014B	optional	optional	optional	X	X	X
Cross Leak, 1014C	optional	optional	optional	X	X	X
PIND, 2020	X	X	some devices			
Serialization	X	X	X			
Controlled Electrical Test Specifications	X	X	X	X	X	X
Interim Electricals, 25°C	X	X	X	optional	optional	optional
Burn-in, 125°C, 1015*	240 hrs	240 hrs	240 hrs	160 hrs	160 hrs	160 hrs
PDA ≤ 10%*	5%	5%	X	X	X	X
Drift Measurement (Δ's)	X	X	X			
Fine Leak, 1014B	X	X	X	optional	optional	optional
Cross Leak, 1014C	X	X	X	optional	optional	optional
Final Electricals (3 temp DC, 25°C AC)	X	X	X	X	X	X
X-Ray, 2012	X	X	X			
Group A, 5005 Table I (Note: hybrids use Method 5008 for Quality)	X	X	X	X	X	X
Group B, 5005 Table II**	every lot	every lot	every lot	every lot	every lot	every lot
Group C, 5005, Table III	not required	not required	not required	every 90 days	every 90 days	every 90 days for quality
Group D, 5005, Table IV	every 6 months per package	every 6 months per package	every 6 months per package	every 6 months per package	every 6 months per package	
External Visual, 2009	X	X	X	X	X	X

* CMOS devices receive 2 static burn-ins of 24 hours each and a dynamic burn-in of 240 hours with PDA's of 5% on the statics (combined) and 5% on the dynamic.

** For lot definitions, see MIL-M-38510.

*** Some devices are tested to other conditions.

© IC MASTER 1984

NATIONAL SEMICONDUCTOR MILITARY/AEROSPACE PRODUCTS
(X = Available, F = Future, S = Submitted for Qualification)

	883B	38510B	883S	38510S	RAD HARD
ADC0800	X				
ADC0808	X				
ADC0816	X				
ADC1210	X				
ADC1211	X				
AF100-1	X				
AF100-2	X				
AF120	X				
AH0014	X		X		
AH0015	X		X		
AH0019	X		X		
AH0126	X		X		
AH0129	X		X		
AH0133	X		X		
AH0134	X		X		
AH0139	X		X		
AH0140	X		X		
AH0141	X		X		
AH0142	X		X		
AH0143	X		X		
AH0144	X		X		
AH0145	X		X		
AH0146	X		X		
AH0151	X		X		
AH0152	X		X		
AH0153	X		X		
AH0154	X		X		
AH0161	X		X		
AH0162	X		X		
AH0163	X		X		
AH0164	X		X		
AH2114	X				
AM3705	X				
CD4000	F		X		
CD4001	X	X	X	F	X
CD4002	X	X	X	F	X
CD4006	X	X	X	F	X
CD4007	X	X	X	F	X
CD4008	X	F	X	F	X
CD4009	X		X		X
CD4010	X		X		X
CD4011	X	X	X	F	X
CD4012	X	X	X	F	X
CD4013	X	X	X	F	X
CD4014	X	X	X	F	X
CD4015	X	X	X	F	X
CD4016	X	F	X	F	X
CD4017	X	X	X	F	X
CD4018	X	X	X	F	X
CD4019	X	X	X	F	X
CD4020	X	X	X	F	X
CD4021	X	X	X	F	X
CD4022	X	X	X	F	X
CD4023	X	X	X	F	X
CD4024	X	F	X	F	X
CD4025	X	X	X	F	X
CD4027	X	X	X	F	X
CD4028	X	F	X	F	X
CD4029	X		X		X
CD4030	X	X	X	F	X
CD4031	X	X	X	F	X
CD4034	X		X		
CD4035	X		X		X
CD4040	X		X		X
CD4041	X	F	X	F	X
CD4042	X		X		X
CD4043	X		X		X
CD4044	X		X		X
CD4046	X		X		
CD4047	X		X		
CD4048	X	F	X		X
CD4049	X	X	X	F	X
CD4050	X	X	X	F	X
CD4051	X		X		X
CD4052	X		X		X
CD4053	X		X		X
CD4060	X		X		
CD4066	X	F	X	F	X
CD4069	X	F	X	F	X
CD4070	X	F	X	F	X
CD4071	X	F	X	F	X
CD4072	X	F	X	F	X
CD4073	X	F	X	F	X
CD4075	X	F	X	F	X
CD4076	X	F	X	F	X
CD4081	X	F	X	F	X
CD4082	X		F		
CD4089	X		X		
CD4093	X	F	X	F	X
CD4099	X	F	X	F	
CD40106	X	F	X	F	X
CD40160	X		X		
CD40161	X		X		
CD40162	X		X		
CD40163	X		X		
CD40174	X	F	X	F	X

	883B	38510B	883S	38510S	RAD HARD
CD40175	X		X		
CD40192	X		X		X
CD40193	X		X		X
CD40195	X		X		
CD4503	X		X		
CD4507	X		F		
CD4510	X		X		
CD4511	X		X		
CD4512	X		F		
CD4514	X	F	F	F	X
CD4515	X	F	F	F	X
CD4516	X		X		
CD4518	X		X		X
CD4519	X		X		
CD4520	X		X		
CD4522	X		F		
CD4526	X		F		
CD4527	X		X		
CD4528	X		F		
CD4529	X		F		
CD4543	X		F		
CD4584	X		F		X
CD4723	X		X		
CD4724	X		X		
COP320C	F				F
COP402L	F				
COP498	F				F
COP499	F				F
DAC0800	X	F	X		
DAC0808	X		X		
DAC1020	X				
DAC1021	X				
DAC1022	X				
DAC1200	X				
DAC1201	X				
DAC1202	X				
DAC1203	X				
DAC1220	X				
DAC1221	X				
DAC1222	X				
DAC1285	X				
DAC1286	X				
DH0006	X		X		
DH0008	X		X		
DH0011	X				
DH0034	X		X		
DH0035	X				
DM2502	X		X		
DM2503	X		X		
DM2504	X		X		
DM5400	X	X	X		
DM5401	X	X	X		
DM5402	X	X	X		
DM5403	X	X	X		
DM5404	X	X	X		
DM5405	X	X	X		
DM5406	X	X	X	S	
DM5407	X		X		
DM5408	X	X	X		
DM5409	X		X		
DM5410	X	X	X		
DM5411	X		X		
DM5413	X		X		
DM5414	X		X		
DM5416	X		X		
DM5417	X		X		
DM5420	X	X	X		
DM5423	X		X		
DM5425	X		X		
DM5426	X		X		
DM5427	X		X		
DM5430	X	X	X		
DM5432	X		X		
DM5437	X	X	X		
DM5438	X	X	X		
DM5440	X	X	X		
DM5441A	X		X		
DM5442	X		X		
DM5445	X		X		
DM5446A	X		X		
DM5447A	X		X		
DM5448	X		X		
DM5450	X	X	X		
DM5451	X	X	X		
DM5453	X	X	X		
DM5454	X	X	X		
DM5460	X		X		
DM5470	X		X		
DM5472	X	X	X		
DM5473	X	X	X		
DM5474	X	X	X		
DM5475	X		X		
DM5476	X	X	X		
DM5483	X	X	X		
DM5485	X		X		
DM5486	X	X	X		

	883B	38510B	883S	38510S	RAD HARD
DM5490A	X		X		
DM5492A	X		X		
DM5493A	X		X		
DM5495	X	X	X		
DM5496	X		X		
DM54107	X	X	X		
DM54109	X		X		
DM54121	X		X		
DM54123	X		X		
DM54125	X		X		
DM54126	X		X		
DM54132	X		X		
DM54142	X		X		
DM54145	X		X		
DM54147	X		X		
DM54148	X		X		
DM54150	X		X		
DM54151A	X	X	X		
DM54153	X	X	X		
DM54154	X		X		
DM54155	X		X		
DM54156	X		X		
DM54157	X	X	X		
DM54160A	X	X	X	F	
DM54161A	X	X	X		
DM54162A	X	X	X		
DM54163A	X	X	X		
DM54164	X	X	X		
DM54165	X		X		
DM54166	X		X		
DM54173	X		X		
DM54174	X		X		
DM54175	X		X		
DM54176	X		X		
DM54177	X		X		
DM54180	X	X	X		
DM54181	X	X	X		
DM54184	X		X		
DM54185A	X		X		
DM54190	X		X		
DM54191	X		X		
DM54192	X		X		
DM54193	X		X		
DM54194	X		X		
DM54195	X		X		
DM54196	X		X		
DM54197	X		X		
DM54198	X		X		
DM54199	X		X		
DM54251	X		X		
DM54284	X		X		
DM54285	X		X		
DM54365	X		X		
DM54366	X		X		
DM54367	X		X		
DM54368	X		X		
DM54L00	X	X	X		
DM54L01	X	F	X	F	
DM54L02	X	X	X	S	
DM54L03	X	X	X		
DM54L04	X	X	X	S	
DM54L05	X		X		
DM54L08	X		X		
DM54L09	X		X		
DM54L10	X	X	X		
DM54L11	X		X		
DM54L20	X	X	X		
DM54L26	X		X		
DM54L30	X	X	X		
DM54L32	X		X		
DM54L42A	X	F	X	F	
DM54L51	X		X		
DM54L54	X		X		
DM54L55	X		X		
DM54L71	X	X	X		
DM54L72	X	X	X		
DM54L73	X	X	X		
DM54L74	X	X	X		
DM54L75	X		X		
DM54L78	X	X	X		
DM54L85	X		X		
DM54L86	X	X	X		
DM54L90	X	X	X		
DM54L91	X		X		
DM54L93	X	X	X		
DM54L95	X	X	X		
DM54L98	X		X		
DM54L123A	X		X		
DM54L154A	X		X		
DM54L157A	X		X		
DM54L164A	X	F	X	F	
DM54L165A	X		X		
DM54L192	X		X		
DM54L193	X		X		
DM54LS00	X	X	X	S	
DM54LS01	X		X		

© IC MASTER 1984

NATIONAL SEMICONDUCTOR MILITARY/AEROSPACE PRODUCTS
(X = Available, F = Future, S = Submitted for Qualification)

	883B	38510B	883S	38510S	RAD HARD
DM54LS02	X	X	X	S	
DM54LS03	X	X	X	F	
DM54LS04	X	X	X	S	
DM54LS05	X	X	X	S	
DM54LS08	X	X	X	S	
DM54LS09	X		X		
DM54LS10	X	X	X	S	
DM54LS11	X	X	X	S	
DM54LS12	X	X	X	F	
DM54LS13	X		X		
DM54LS14	X	F	X	F	
DM54LS15	X	X	X	F	
DM54LS20	X	X	X	S	
DM54LS21	X	X	X	S	
DM54LS22	X	X	X	S	
DM54LS26	X		X		
DM54LS27	X	X	X	S	
DM54LS30	X	X	X	S	
DM54LS32	X	X	X	S	
DM54LS37	X	X	X	F	
DM54LS38	X	X	X	S	
DM54LS40	X	X	X	F	
DM54LS42	X		X		
DM54LS47	X		X		
DM54LS48	X		X		
DM54LS49	X		X		
DM54LS51	X	X	X	S	
DM54LS54	X	X	X	F	
DM54LS55	X		X		
DM54LS73	X	F	X	F	
DM54LS74	X	F	X	F	
DM54LS75	X	F	X	F	
DM54LS76	X	F	X		
DM54LS77	X		X		
DM54LS78	X		X		
DM54LS83	X	F	X	F	
DM54LS85	X		X	F	
DM54LS86	X	X	X	S	
DM54LS90	F		F		
DM54LS93	F		F		
DM54LS107	X	F	X		
DM54LS109	X	F	X	F	
DM54LS112	X	F	X	F	
DM54LS113	X	F	X	F	
DM54LS114	X	F	X		
DM54LS122	X		X		
DM54LS123	X		X		
DM54LS125	X	F	X	F	
DM54LS126	X		X		
DM54LS132	X	F	X	F	
DM54LS138	X	X	X	F	
DM54LS139	X	X	X	F	
DM54LS151	X	X	X	S	
DM54LS153	X	X	X	S	
DM54LS154	X		X		
DM54LS155	X		X		
DM54LS156	X		X		
DM54LS157	X	X	X	S	
DM54LS158	X		X		
DM54LS160	X		X		
DM54LS161	X	F	X	F	
DM54LS162	X		X		
DM54LS163	X	F	X	F	
DM54LS164	X	X	X	F	
DM54LS168	X		X		
DM54LS169	X	F	X	F	
DM54LS170	X		X		
DM54LS173	X		X		
DM54LS174	X	F	X	F	
DM54LS175	X	F	X	F	
DM54LS190	X		X		
DM54LS191	X	F	X	F	
DM54LS192	X	F	X	F	
DM54LS193	X	F	X	F	
DM54LS194	X	F	X	F	
DM54LS196	X		X		
DM54LS197	X	F	X	F	
DM54LS240	X		F		
DM54LS241	X		F		
DM54LS242	X	F	F	F	
DM54LS243	X	F	F	F	
DM54LS244	X		F		
DM54LS247	X		F		
DM54LS248	X		X		
DM54LS249	X		X		
DM54LS251	X	F	X	F	
DM54LS253	X	X	X	S	
DM54LS257	X	F	X	F	
DM54LS258	X	F	X	F	
DM54LS266	X	F	X	F	
DM54LS279	X		X		
DM54LS283	X		X		
DM54LS352	X		X		
DM54LS353	X		X		
DM54LS365	X	F	X	F	
DM54LS366	X	F	X	F	
DM54LS367	X	F	X	F	
DM54LS368	X	F	X	F	
DM54LS373	X		X		
DM54LS374	X		X		
DM54LS386	X		X		
DM54LS670	X		X		
DM54S00	X	F	X	F	

	883C	38510B	883S	38510S	RAD HARD
DM54S02	X	F	X	F	
DM54S03	X	F	X		
DM54S04	X	F	X	F	
DM54S05	X	F	F		
DM54S08	X	F	X	F	
DM54S09	X	F	X		
DM54S10	X	F	X	F	
DM54S11	X	F	X		
DM54S15	X	F	F		
DM54S20	F	F	F	F	
DM54S22	F	F	F		
DM54S30	F	F	F		
DM54S32	F		F		
DM54S40	X	F	F	F	
DM54S51	F	F	F	F	
DM54S64	X	F	F		
DM54S65	X	F	F		
DM54S74	X	F	F	F	
DM54S86	X	F	F	F	
DM54S112	X	F	X		
DM54S113	X	F	X		
DM54S114	X	F	X		
DM54S133	X	F	X		
DM54S134	X	F	X		
DM54S135	X	F	X		
DM54S136	X		X		
DM54S138	X		X		
DM54S139	X		X		
DM54S140	X	F	X		
DM54S151	X	F	F	F	
DM54S153	X	F	X	F	
DM54S157	X	F	X		
DM54S158	X	F	X		
DM54S160	X		F		
DM54S161	X		F		
DM54S162	X		F		
DM54S163	X		X		
DM54S174	X	F	X		
DM54S175	X	F	X	F	
DM54S181	X		F		
DM54S182	X	F	X		
DM54S188	X		X		
DM54S189	X				
DM54S194	X	F	X		
DM54S195	X	F	F		
DM54S196	X		F		
DM54S197	X		F		
DM54S240	X		F		
DM54S241	X		F		
DM54S242	X		X		
DM54S243	X		X		
DM54S244	X		F		
DM54S251	X	F	F		
DM54S253	X		X		
DM54S257	X	F	X		
DM54S258	X	F	X		
DM54S280	X		X		
DM54S283	X		X		
DM54S287	X	F	X		
DM54S288	X		X		
DM54S289	X				
DM54S299	F		F		
DM54S373	F		F		
DM54S374	F		F		
DM54S381	F		F		
DM54S387	X	F	X		
DM54S472	X		X		
DM54S473	X		X		
DM54S474	X		X		
DM54S475	X		X		
DM54S570	X	F	X		
DM54S571	X	F	X		
DM54S572	X	F	X		
DM54S573	X	F	X		
DM54S940	F		X		
DM54S941	F		X		
DM7092	X		X		
DM7093	X		X		
DM7094	X		X		
DM7095	X		X		
DM7096	X		X		
DM7097	X		X		
DM7098	X		X		
DM70L95	X		X		
DM70L96	X		X		
DM70L97	X		X		
DM70L98	X		X		
DM70LS95	X		X		
DM70LS96	X		X		
DM70LS97	X		X		
DM70LS98	X		X		
DM7121	X		X		
DM7123	X		X		
DM7130	X		X		
DM7131	X		X		
DM7136	X		X		
DM7160	X		X		
DM71L23	X		X		
DM71LS95	X		X		
DM71LS96	X		X		
DM71LS97	X		X		
DM71LS98	X		X		
DM7200	X		X		

	883C	38510B	883S	38510S	RAD HARD
DM7214	X		X		
DM7219	X		X		
DM7220	X		X		
DM7223	X		X		
DM7280	X		X		
DM7281	X		X		
DM7288	X		X		
DM7290	X		X		
DM7291	X		X		
DM7511	X		X		
DM7520	X		X		
DM7542	X		X		
DM7544	X		X		
DM7546	X		X		
DM7551	X		X		
DM7552	X		X		
DM7553	X		X		
DM7554	X		X		
DM7555	X		X		
DM7556	X		X		
DM7560	X		X		
DM7563	X		X		
DM7570	X		X		
DM7590	X		X		
DM75L11	X		X		
DM75L12	X		X		
DM75L51	X		X		
DM75L52	X		X		
DM75L54	X		X		
DM75L60	X		X		
DM75L63	X		X		
DM7613	X		X		
DM76L12	X		X		
DM76L24	X		X		
DM76L25	X		X		
DM76L70	X		X		
DM76L75	X		X		
DM76L76	X		X		
DM76L90	X		X		
DM76L93	X		X		
DM76LS52	X		X		
DM76LS62	X		X		
DM76S75	F		X		
DM77S184	X	F	X		
DM77S185	X	F	X		
DM77S190	X	F	F		
DM77S191	X	F	F		
DM77S295	X		X		
DM77S296	X		X		
DM7853	X		X		
DM7875A	X		X		
DM7875B	X		X		
DM9024	X		X		
DM9300	X		X		
DM9301	X		X		
DM9309	X		X		
DM9310	X		X		
DM9312	X		X		
DM9316	X		X		
DM9318	X		X		
DM9322	X		X		
DM9334	X		X		
DM9601	X		X		
DM9602	X		X		
DP7303	F				
DP7304	X				
DP7307	F				
DP7308	F				
DP7310	X				
DP7311	X				
DS0025	X				
DS0026	X		X		
DS0056	X				
DS1603	X		X		
DS1611	X		X		
DS1612	X		X		
DS1613	X		X		
DS1614	X		X		
DS1631	X		X		
DS1632	X		X		
DS1633	X		X		
DS1634	X		X		
DS1647	X		X		
DS1648	X		X		
DS1671	X		X		
DS1674	X		X		
DS1678	X		X		
DS1686	X		X		
DS1687	X		X		
DS1691	X		X		
DS1692	F				
DS16149	F				
DS16179	F				
DS26LS31	X		F		
DS26LS32	X		X		
DS26LS33	X		X		
DS26S10	F				
DS26S11	F				
DS55107	X		X		
DS55108	X				
DS55113	X				
DS55114	X	F	X	F	

© IC MASTER 1984

NATIONAL SEMICONDUCTOR MILITARY/AEROSPACE PRODUCTS
(X = Available, F = Future, S = Submitted for Qualification)

	883B	38510B	883S	38510S	RAD HARD
DS55115	X	F	X	F	
DS55121	X				
DS55122	X				
DS55180	X		X		
DS55182	X		X		
DS55183	X		X		
DS55325	X				
DS55450	X				
DS55451	X		X		
DS55452	X		X		
DS55453	X		X		
DS55454	X		X		
DS55460	X				
DS55461	X		X		
DS55462	X		X		
DS55463	X		X		
DS55464	X		X		
DS55493	X				
DS55494	X				
DS7800	X		X		
DS7803	X				
DS7811	X				
DS7812	F				
DS7819	X				
DS7820A	X	F	X	F	
DS7830	X	F	X	F	
DS7831	X	F	X		
DS7832	X	F	X		
DS7833	X		X		
DS7834	X		X		
DS7835	X		X		
DS7836	X		X		
DS7837	X		X		
DS7838	X		X		
DS7839	X		X		
DS7856	X				
DS7858	X				
DS7880	X				
DS7889	X				
DS78C20	X		X		
DS78C120	X		X		
DS78L12	X		X		
DS78LS120	X		X		
DS8T26A	F				
DS8T28	F				
IDM2901A	X				
IDM2901A-1	X				
IDM2909A	F				
IDM2911A	F				
IDM29750	X				
IDM29751	X				
IDM29760	X				
IDM29761	X				
IDM29803	F				
IDM29811	F				
IDM29901	X				
IDM29903	F				
IDM29908	X				
INS8048	F				
INS8049	F				
INS80C48	F		F		
INS8080A	F				
INS82C06	X		X		
INS82LS05	X		X		
LF111	F				
LF151	X		X		
LF151A	X				
LF153	X				
LF155	X	F	X		
LF155A	X				
LF156	X	F	X		
LF156A	X				
LF157	X	F	X		
LF157A	X				
LF198	X	F	X	F	
LF11201	X				
LF11202	X				
LF11331	X				
LF11332	X				
LF11333	X				
LF11508	X				
LH0002	X		X		
LH0003	X				
LH0004	X				
LH0005	X		X		
LH0005A	X				
LH0020	X		X		
LH0021	X		X		
LH0022	X		X		
LH0023	X		X		
LH0024	X		X		
LH0032	X				
LH0033	X				
LH0036	X		X		
LH0037	X		X		
LH0038	X		X		
LH0041	X		X		
LH0042	X				
LH0043	X		X		
LH0044	X		X		
LH0044A	X				

	883B	38510B	883S	38510S	RAD HARD
LH0045	X		X		
LH0052	X		X		
LH0053	X		X		
LH0061	X		X		
LH0062	X		X		
LH0063	X		X		
LH0070-0	X		X		
LH0070-1	X		X		
LH0070-2	X		X		
LH0075	X		X		
LH0076	X		X		
LH0082	X		X		
LH0084	X		X		
LH0086	X				
LH0091	X		X		
LH0094	X		X		
LH1605	X				
LH740A	X				
LH2101A	X		X		
LH2108	X		X		
LH2108A	X				
LH2110	X		X		
LH2111	X		X		
LH24250	X		X		
LM10	X		X		
LM11	F		F		
LM101A	X	X	X	S	
LM102	X		X		
LM103	X		X		
LM104	X		X		
LM105	X		X		
LM106	X		X		
LM107	X		X		
LM108	X		X		
LM108A	X	X	X	S	
LM109	X	F	X	F	
LM110	X	F	X	F	
LM111	X	X	X	S	
LM112	X		X		
LM113	X		X		
LM117	X	F	X	F	
LM118	X	X	X	S	
LM119	X		X		
LM120	X	F	X	F	
LM121	X		X		
LM122	X		X		
LM124	X	F			
LM124A	X		X		
LM125	X		X		
LM126	X		X		
LM129A	X				
LM129B	X		X		
LM131	X		X		
LM131A	X				
LM134	X		X		
LM135	X		X		
LM136	X		X		
LM137	X	F	X	F	
LM138	X				
LM139	X				
LM139A	X	F	X	F	
LM140	X	F	X		
LM143	X		X		
LM144	X		X		
LM145	X		X		
LM146	X		X		
LM148	X				
LM149	X				
LM150	X				
LM158	X		X		
LM158A	X				
LM159	X		F		
LM160	X				
LM161	X				
LM185	F		F		
LM192	X		F		
LM193	X		X		
LM193A	X	F	X		
LM194	X				
LM195	X				
LM199	X		X		
LM199A	X				
LM555	X				
LM556	X				
LM567	X				
LM709	X				
LM709A	X				
LM710	X				
LM711	X				
LM723	X		X		
LM725	X				
LM725A	X		X		
LM733	X				
LM741	X		X		
LM741A	X		X		
LM747	X		X		
LM747A	X	X		F	
LM748	X		X		
LM1514	X				
LM1524	F				
LM1536	X				

	883B	38510B	883S	38510S	RAD HARD
LM1558	X				
LM1596	X				
LM4250	X		X		
MF10	F				
MH0007	X				
MH0009	X				
MH0012	X		X		
MH0013	X		X		
MM2114	X				
MM2147	X		F		
MM2708	X				
MM2716	X				
MM4723	X				
MM4724	X				
MM5290	X				
MM5298	F				
MM54C00	X		X		
MM54C02	X		X		
MM54C04	X	F	X	F	X
MM54C06	X		X		
MM54C10	X		X		
MM54C14	X	F	X	F	X
MM54C20	X		X		
MM54C30	X		X		
MM54C32	X		X		
MM54C42	X		X		
MM54C48	X		X		
MM54C73	X		X		
MM54C74	X		X		
MM54C76	X		X		
MM54C83	X		X		
MM54C85	X		X		
MM54C86	X		X		X
MM54C89	X		X		
MM54C90	X		X		
MM54C93	X		X		
MM54C95	X		X		
MM54C107	X		X		
MM54C150	X		X		
MM54C154	X		X		
MM54C157	X		X		
MM54C160	X	F	X	F	
MM54C161	X	F	X	F	
MM54C162	X	F	X	F	
MM54C163	X	F	X	F	
MM54C164	X		X		
MM54C165	X		X		
MM54C173	X	F	X	F	X
MM54C174	X	F	X	F	X
MM54C175	X		X		
MM54C192	X	F	X	F	X
MM54C193	X	F	X	F	X
MM54C195	X		X		
MM54C200	X		X		X
MM54C201			F		F
MM54C204			F		F
MM54C221	X		X		
MM54C240	X		F		
MM54C244	X		F		
MM54C373	X		X		
MM54C374	X		X		
MM54C901	X		X		X
MM54C902	X		X		X
MM54C903	X		X		X
MM54C904	X		X		X
MM54C905	X		X		
MM54C906	X		X		X
MM54C907	X		X		X
MM54C908	X		X		
MM54C909	X		X		
MM54C910	X		X		
MM54C914	X		X		
MM54C915	X				
MM54C920	X				
MM54C921	X				
MM54C922	X		X		
MM54C923	X				
MM54C929	X	F	X	F	F
MM54C930	X				
MM54C941	X		F		
MM54C948	X		X		
MM54C949	X		X		
MM70C95	X		X		
MM70C96	X		X		
MM70C97	X		X		
MM70C98	X		X		
MM72C19	X		X		
MM78C29	X		X		
MM78C30	X		X		
NSC800	X		F		F
NSC810	X		F		F
NSC830	X		F		F
NSC831	F		F		
NS80C48	X		F		
NS80C49	X		F		
NMC6504	F		F		F
NMC6514	F		F		F
MM82PC08	F		F		
MM82PC12	F		F		

© IC MASTER 1984

Eliminate Gate

With Raytheon's Full Service Approach to Advanced Bipolar ISL Configurable Gate Array Problem Solving.

Your reason for considering semicustom gate arrays is for the time and cost effective superior product solutions they provide. Raytheon achieves those goals for you, recognizing and avoiding the many potentially risk inducing pitfalls that could affect your objectives.

Employing service intensive customer applications support and proven automated design techniques, Raytheon strives for error-free gate array implementation the first time.

Experience

Raytheon was among the very first to design and manufacture gate arrays. Our long standing dedication to hard-to-do, high-performance, high-reliability design and production requirements carries over to all aspects of our gate array programs.

We began with a 60-gate device in 1974, followed by a 300-gate device in 1978 and a bipolar ISL 1620-gate density array in 1981. Over 70 circuit designs have been successfully developed, and are now in volume production. We now have five members of our ISL CGA family, ranging from 800 to 2400-gates.

Personalized Development Support

Raytheon's cost effective approach to semicustom circuit implementation makes it fast and easy to develop your prototypes. Working parts can be in your system within 8 weeks.

Raytheon can start with your logic diagram and truth tables or divide the design tasks with you to optimize cost, minimize the turnaround time, and ensure design control.

Regardless of the design entry point that you choose, the Raytheon design engineering team will work closely with your designers to help assure optimum product performance, cost-effective partitioning, accurate logic translation, and required testability.

A comprehensive design source manual and an intensive 3-day tutorial are available to those customers who will be performaing the circuit design portions of development.

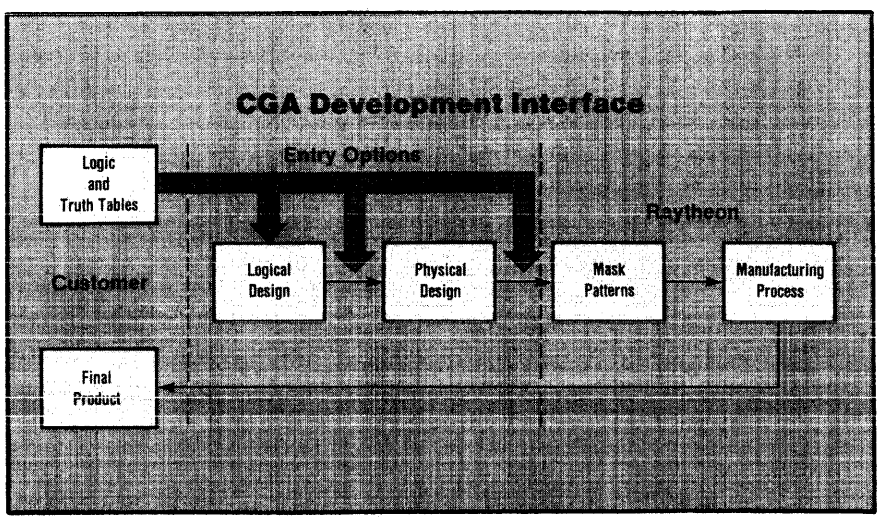

© IC MASTER 1984

Array Anxiety

Design Automation

Raytheon's CAD facility offers a comprehensive assortment of analysis and design software, in a **common data base** environment, to quickly produce error-free prototype devices:

- Schematic Capture
- Logic Simulation
- Fault Grading
- Auto-Placement and Routing (Auto-Layout)
- Performance Verification

Performance Characteristics

Raytheon ISL CGAs are all designed for radiation tolerance and to operate over the -55° C to +125° C temperature range. Full MIL-STD-883, Class B or S processing, program management, and other custom or special requirments can be satisfied.

Bipolar ISL Technology

Raytheon's highly manufacturable 3 micron bipolar ISL process produces high density, superior performance, and efficient power consumption on all configurable gate arrays.

Interdensity compatibility exists between all arrays. Topological uniformity permits universal macrofunction and I/O designs.

All Raytheon CGA's are fully TTL compatible. You can choose the desired function from a list of 35 I/O configurations and situate it at any signal pad location.

Package Options

Everything will be done to put your array in the package you need. Choose from ceramic DIPs, leadless chip carriers, flatpaks, pin grid arrays, or name the custom package you require.

Dedicated Service

Raytheon's high level of applications support begins before an order is received. Call us today. Let's examine your needs, and explore a thoroughly analyzed and properly executed configurable gate array development. Raytheon means service and dedication.

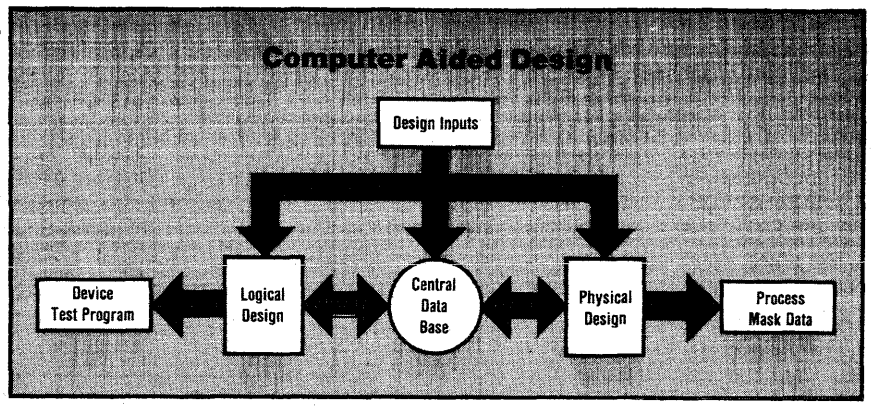

	Part Numbers				
	CGA8L48	CGA12L60	CGA16L68	CGA20L76	CGA24L84
Number of Array ISL Gates	836	1196	1620	1984	2376
Number of I/Os	48	60	68	76	84
Standard Speed (nS)	2.3	2.3	2.3	2.3	2.3
Enhanced Speed (nS)*	1.8	1.8	1.8	1.8	1.8
Power /Gate (μW)	350	350	350	350	350
Operating Power Supply (V_{CC}/V_{BB})	5/1.8	5/1.8	5/1.8	5/1.8	5/1.8

*A Raytheon proprietary feature that is available on all ISL gates.

The following MSI functions are a partial listing of those available in our **Macrofunction Library** for convenient implementation of customer circuit design.

Function	5400/7400 Series No.*
D-Type Flip-Flop with Clear and Preset	74
Two Input Exclusive-OR Gate	86
J-K Type Flip-Flop	109
3-to-8 Line Decoder	138
8-to-3 Line Priority Encoder	148
1-of-8 Data Selectors/Multiplexers with Strobed Outputs	151
4-to-1 Data Selector/Multiplexer	153
4-to-16 Line Decoder/Demultiplexer	154
Sychronous Decade Counter	162A
4-Bit Bidirectional Universal Shift Register	194
S-R Latch	279
9-Bit Odd/Even Parity Generator/Checker	280
4-Bit Binary Full Adder with Fast Carry	283
8-Bit Universal Shift/Storage Register	299
Octal Transparent Latches	373
Octal D-Type Edge-Triggered Flip-Flops	374
4-Bit ALU	381

*The ISL logic format functions are pin polarity and function equivalents of the corresponding 5400/7400 LS Series functions.

Raytheon reserves the right to change the circuitry and other data at any time without notice.

RAYTHEON

Raytheon Company. Semiconductor Division
350 Ellis Street. Mountain View. CA 94043
(415) 966-7716

High-Reliability Products

RCA Solid State offers an extensive line of high-reliability integrated circuits and discrete power devices that are processed and screened in accordance with military, RCA, or special custom specifications to meet the needs of modern military, aerospace, and critical industrial and scientific applications. The products encompass a wide range of applications and many different technologies, as follows:

- Discrete solid-state power devices (power transistors, power MOS/FET's, triacs, and silicon controlled rectifiers)
- CD4000-series CMOS digital logic circuits
- CDP1800-series CMOS microprocessor, memory, and I/O circuits
- CA3000-series linear (bipolar and BiMOS) circuits and small signal MOS/FET's
- Custom high-speed bipolar circuits
- Custom and semicustom ICs (Gate Arrays)
- Emulation and programmable integrated circuit (EPIC) 8-bit slice microcomputer family
- Radiation-hardened versions of selected types listed above.

Typical Data Supplied with Order

	MIL-M-38510, Class S MIL-STD-883/1S	MIL-M38510, Class B MIL-STD-883/3	MIL-S-19500 (JAN and JANTX)
Certificate of Compliance	X	X	X
SEM photograph, if applicable	X	—	—
Parametric and delta data	X	—	X*
X-ray report	X	—	—

*Available upon request for JANTX devices

Source Inspections

Both customer and government (DCAS) source inspection requirements are honored as appropriate. Source Inspections for Class B integrated circuits are usually required prior to shipment or to verify Group A conformance tests. Source inspections for Class S parts are usually imposed at precap inspections and for verification of Group A tests. Specific requirements for source inspections must be understood and mutually agreed upon by the customer and RCA prior to the placement of orders so that these requirements can be incorporated into the RCA internal specifications that are used to control the order.

For a summary of available products refer to the High-Reliability Product Guide HRP-479B. For complete technical data refer to the High Reliability Integrated Circuits DATABOOK SSD-230A.

High-Reliability Power Devices

MIL-S-19500 is the specification for the familiar "JAN"-type solid-state device. Detailed electrical specifications are prepared as needed by the three military services and coordinated by the Defense Electronic Supply Center.

Levels of reliability are defined by MIL-S-19500. Devices designated as JAN types receive lot sampling only and are the least expensive. Devices designated as JANTX receive some 100-per-cent screening (primarily burn-in) and a tight lot-sampling plan.

The Defense Electronic Supply Center maintains a "Qualified Products List" of all vendors qualified to produce devices in accordance with MIL-S-19500. This list, QPL-19500, is published periodically and is available to manufacturers of military equipment.

MIL-STD-750 test methods are used as required by the individual military detail specification.

In addition to JAN and JANTX types, high-reliability selections of all RCA power transistors, triacs and SCRs can be obtained on a custom basis. Such devices are subjected to high-reliability preconditioning and screening in accordance with the Group A, B, and C Sampling Tests as specified in MIL-STD-750 or special customer requirements.

Radiation-Hard Power Transistors

RCA also offers a variety of bipolar silicon power transistors in which special design and processing techniques are used to assure continued functional performance after exposure to specified dosages of neutron and gamma radiation.

High-Reliability IC's

RCA is a leading supplier of high-reliability integrated circuits to the military and aerospace community. RCA specialists fully understand the needs of component and systems engineers in the design of high-reliability equipment, are thoroughly familiar with the objective and requirements of MIL-STD 883 and MIL-M-38510, and work closely with governmental agencies in the establishment of detailed specifications for high-reliability microcircuits. Moreover, RCA provides complete facilities for processing, and testing integrated circuits to these specifications.

© IC MASTER 1984

High-Reliability Products

RCA offers high-reliability versions of virtually its entire line of standard-product integrated circuits from the CD4000 series of CMOS digital logic types, the CDP1800 series of microprocessor and associated memory and input/output (I/O) types, and the CA3000 series of bipolar linear types.

These integrated circuits are processed and screened to MIL-STD-883 Class B requirements.

RCA also offers high-reliability versions of standard-product types that are processed and screened to special customized specifications, especially for the aerospace user and others who procure types to Class S specifications.

RCA maintains an extensive computer file of customer specifications and has the methodology required to translate these customized specifications into internal RCA standards and factory operating procedures. In addition to the detailed device specifications, the computer file lists the customer specification number, any revision number, and the RCA custom number assigned to a specific device type.

MIL-M-38510 CD4000-Series CMOS IC's

The purpose of the MIL-M-38510 program is to achieve standardization among integrated-circuit suppliers and to assure delivery of devices whose long-term life will satisfy the requirements of the system for which they are intended. Three reliability classes — S, B, and C — are described in MIL-M-38510; the screening tests for these reliability classes are performed according to MIL-STD-883, Method 5004. Class S devices are of the highest reliability level and are intended for critical applications where replacement of components is not practical.

The qualification and quality conformance tests delineated in MIL-STD-883, Method 5005 are accelerated stress tests that subject devices to stress levels greater than those normally experienced in a typical application. These tests consist of: Group A, Electrical; Group B, Package and Internal Mechanical Strength; Group C, Indicators of Long Term Reliability; and Group D for package and chip. Both qualification devices and a sample of devices from the production line are subjected to this series of accelerated tests. The tests performed on the qualification devices are called qualification tests; the tests performed on production-line devices after a specific type has been qualified are called conformance tests. Electrical end-point limits for the tests are defined by MIL-M-38510 and are more demanding of CMOS than of TTL. DC parameters are measured at -55°C, +25°C, and +125°C.

MIL-STD-883 Slash-Series CMOS Integrated Circuits

RCA high-reliability slash-series CMOS products include both CD4000-series digital logic types and CDP1800-series microprocessor and memory-system types. The CD4000-series parts are provided to three screening levels — /1S, /3, and /3W — that correspond to MIL-STD-883, Method 5004, Classes S and B requirements. The CDP1800-series parts are supplied to levels /3 and /3W. Equivalent aerospace level screening may be negotiated on a custom basis. RCA also supplies high-reliability chips. These chips are provided to two screening levels, /S (or /R for LSI types) and /M.

RCA CD4000-series level /1S packaged devices and /S chips are also available in radiation-hardened versions.

MIL-STD-883 QMOS IC's

The RCA QMOS series of high-speed CMOS logic integrated circuits will be available in high-reliability versions that are screened to MIL-STD-883, Class B.

MIL-STD-883 Slash-Series Linear Integrated Circuits

The RCA CA3000 slash-series of high-reliability linear integrated circuits includes a broad range of types for use in satelites and other aerospace, military, and critical industrial applications in which maintenance is extremely difficult. These integrated circuits are processed and screened in accordance with MIL-STD-883, Method 5004 format.

The RCA CA3000 slash/series types are supplied to three screening levels (/1, /3, and /3W) that meet the electrical, mechanical, and environmental test methods and procedures established for microelectronics in MIL-STD-883.

Certain RCA CA3000-series IC commerical product can be supplied to standard RCA screening levels or to specialized customer requirements on a custom basis.

High-Reliability Products

Radiation-Resistant CD4000-Series CMOS IC's

RCA offers radiation-hardened CD4000-series CMOS integrated circuits capable of withstanding total ionizing radiation dosages of 10^5 rads(Si) — Z-suffix types — or 10^6 rads(Si) — J-suffix types. These radiation-hardened types are processed to either MIL-M-38510 Class S or MIL-STD-883 level/1S. In addition, these types are subjected to special process controls in which their radiation tolerance is monitored. Samples are exposed to specified total radiation dosages from a Cobalt 60 source, pre- and post-radiation measurements are made of threshold, threshold delta, leakage current, and go, no-go functional tests.

The radiation resistance to the specified levels is verified by exposure of two packaged devices per wafer for SSI, MSI-1, and MSI-2 types and a varied quantity of packaged devices per lot for LSI types, depending on their complexity.

Radiation-Resistant CDP1800-Series Microprocessor and Memory IC's

The CDP1800 series utilizes self-aligned silicon gate technology on either bulk or sapphire substrates. In this technology the gate oxide is grown early in the wafer fabrication sequence. In order to achieve total dose hardness the subsequent processes must be done at relatively low temperatures. RCA's Solid State Technology Center has developed a hardening process for silicon gate and is refining that process for volume manufacture. At the present time, requirements for total dose hardness will be negotiated on a customer by customer basis.

The RCA radiation-hardening custom technology has made possible selected CDP1800-series microprocessor and memory integrated circuits with radiation tolerance levels that approach 10^5 rads(SI).

Emulating and Programmable Integrated Circuit (EPIC) 8-Bit Slice Microcomputer Family (GP Series)

The RCA Emulating and Programmable Integrated Circuit (EPIC) 8-bit slice microcomputer family (GP series), composed of several CMOS/SOS chips, is a high-performance microcomputer "building block" set which can be used to replace existing minicomputers by emulating (adapting) the mini-computer's software or for a wide variety of new applications with unique architecture, at comparable or increased speed and greatly reduced power.

The EPIC series represents the culmination of several years engineering effort to develop a versatile microcomputer chip set which can be used for computing and signal processing. The heart of the set is the GPU, or general processing unit, an "eight bit slice" processor which can be made to "look like" many different CPU's (Central Processing Units) by proper selection of auxiliary chips. The GPU is externally programmable and receives instructions from external sources. CMOS/SOS technology is used exclusively to achieve high performance.

© IC MASTER 1984

seeQ

M5133/M5143
(Military Temperature Range)

E5133/E5143
(Extended Temperature Range)

November 1983

2764/27128 UV EPROM

Features

- **Military and Extended Temperature Range**
  - **-55 to +125° C: M5133 (2764)**
  - **-55 to +125° C: M5143 (27128)**
  - **-40 to +85° C: E5133/E5143**
- **250 ns Access Times at -55 to 125° C**
- **Programmed Using Intelligent Algorithm**
  - **Typically 5 ms/byte Programming Time**
  - **2 Minutes for 5143**
  - **1 Minute for 5133**
- **JEDEC Approved Bytewide Pin Configuration**
  - **5133 8K x 8 Organization**
  - **5143 16K x 8 Organization**
- **Low Power Dissipation**
  - **100 mA Active Current**
  - **35 mA Standby Current**
- **Silicon Signature™**

Description

SEEQ's 5133 and 5143 are ultraviolet light erasable EPROMs which are organized 8K x 8 and 16K x 8 respectively. They are pin for pin compatible to military and extended temperature range 64K and 128K EPROMs, such as the 2764 and 27128 respectively, in all operational/programming modes. Both devices have access times as fast as 250 ns over the military and extended temperature, and V_{CC} tolerance range. The access time is achieved without sacrificing power since the maximum active and standby currents are 100 mA and 35 mA respectively. The 250 ns allows higher system efficiency by eliminating the need for wait states in today's 8- or 16-bit microcomputers.

Initially, and after erasure, all bits are in the "1" state. Data is programmed by applying 21 V to V_{PP} and a TTL "0" to pin 27 (program pin). The 5133 and 5143 may be programmed with an intelligent algorithm

Block Diagram

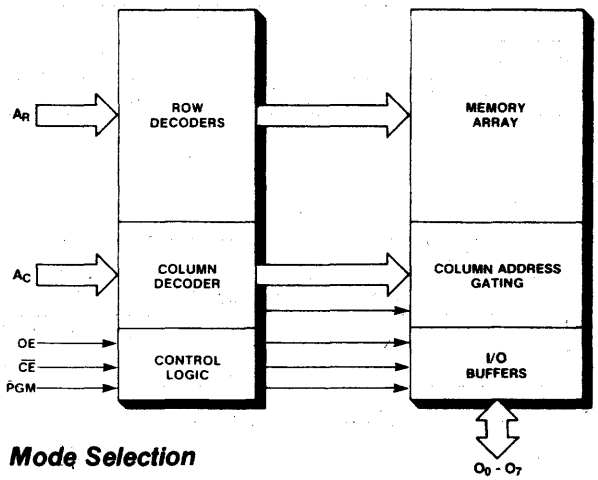

Pin Configuration

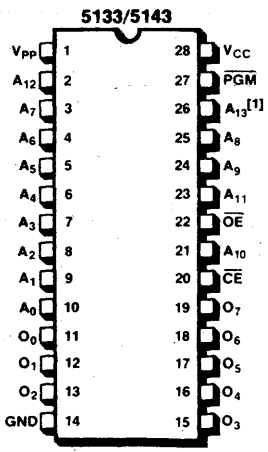

NOTE 1: PIN 26 IS A NO CONNECT ON THE 5133.

Mode Selection

PINS / MODE	CE (20)	OE (22)	PGM (27)	VPP (1)	VCC (28)	Outputs (11-13, 15-19)
Read	V_{IL}	V_{IL}	V_{IH}	V_{CC}	V_{CC}	D_{OUT}
Standby	V_{IH}	X	X	V_{CC}	V_{CC}	High Z
Program	V_{IL}	V_{IH}	V_{IL}	V_{PP}	V_{CC}	D_{IN}
Program Verify	V_{IL}	V_{IL}	V_{IH}	V_{PP}	V_{CC}	D_{OUT}
Program Inhibit	V_{IH}	X	X	V_{PP}	V_{CC}	High Z
Silicon Signature™	V_{IL}	V_{IL}	V_{IH}	V_{CC}	V_{CC}	Encoded Data

X can be either V_{IL} or V_{IH}

For Silicon Signature™: A_0-A_3 are toggled. $A_4 = V_{IL}$, $A_9 = 12V$, all other addresses are at any TTL level.

Pin Names

A_C	ADDRESSES — COLUMN (LSB)
A_R	ADDRESSES — ROW
CE	CHIP ENABLE
OE	OUTPUT ENABLE
O_0 - O_7	OUTPUTS
PGM	PROGRAM

seeQ Technology, Incorporated 1849 Fortune Drive, San Jose, California 95131 • (408) 942-1990

© IC MASTER 1984

M5133/M5143
E5133/E5143

that is now available on commercial programmers. The programming time is typically 5 ms/byte or 2 minutes for all 16K bytes of the 5143. The 5133 requires only half of this time, about a minute for 8K bytes. This faster time improves manufacturing throughput time by hours over conventional 50 ms algorithms. Commercial programmers (e.g. Data I/O, Pro-log, Digelec, Kontron, and Stag) have implemented this fast algorithm for SEEQ's EPROMs. If desired, the 5143 and the 5133 may be programmed using the conventional 50 ms programming specification of older generation EPROMs.

Incorporated on the 5143 and 5133 is Silicon Signature™. Silicon Signature contains encoded data which identifies SEEQ as the EPROM manufacturer, the product's fab location, and programming information. This data is encoded in ROM to prevent erasure by ultraviolet light.

Absolute Maximum Stress Ratings

Temperature
Storage ..... *-65° C to +150° C*
Under Bias ..... *-65° C to +135° C*
All Inputs or Outputs with
Respect to Ground ..... *+7V to -0.6V*
V_{PP} During Programming with
Respect to Ground ..... *+22V to -0.6V*
Voltage on A_9 with
Respect to Ground ..... *+15.5V to -0.6V*

**COMMENT: Stresses above those listed under "Absolute Maximum Ratings" may cause permanent damage to the device. This is a stress rating only and functional operation of the device at these or any other conditions above those indicated in the operational sections of this specification is not implied. Exposure to absolute maximum rating conditions for extended periods may affect device reliability.*

Recommended Operating Conditions (51XX = 5133 and 5143)

	M51XX-250, M51XX-350	E51XX-250, E51XX-350
V_{CC} Supply Voltage[1]	5 V ± 10%	5 V ± 10%
Temperature Range (Read Mode)	–55 to 125° C	–40 to 85° C
V_{PP} During Programming	21 ± 0.5 V	21 ± 0.5 V

DC Operating Characteristics During Read or Programming

Symbol	Parameter		Limits Min.	Limits Max.	Unit	Test Conditions
I_{IN}	Input Leakage Current			10	μA	$V_{IN} = V_{CC}$ Max.
I_O	Output Leakage Current			10	μA	$V_{OUT} = V_{CC}$ Max.
I_{PP} [2]	V_{PP} Current	Read Mode		5	mA	$V_{PP} = V_{CC}$ Max.
		Prog. Mode (25° C)		30	mA	$V_{PP} = 21.5V$
I_{CC1} [2]	V_{CC} Standby Current			35	mA	$\overline{CE} = V_{IH}$
I_{CC2} [2]	V_{CC} Active Current			100	mA	$\overline{CE} = \overline{OE} = V_{IL}$
V_{IL}	Input Low Voltage		-0.1	0.8	V	
V_{IH}	Input High Voltage		2	$V_{CC} + 1$	V	
V_{OL}	Output Low Voltage			0.45	V	$I_{OL} = 2.1$ mA
V_{OH}	Output High Voltage		2.4		V	$I_{OH} = -400$ μA

NOTES:
1. V_{CC} must be applied simultaneously or before V_{PP} and removed simultaneously or after V_{PP}.
2. V_{PP} may be connected directly to V_{CC} except during programming. The supply current is the sum of I_{CC} and I_{PP}.

© IC MASTER 1984

AC Operating Characteristics During Read

Symbol	Parameter	Limits (nsec) 51XX-250 Min.	51XX-250 Max.	51XX-350 Min.	51XX-350 Max.	Test Conditions
t_{ACC}	Address to Data Valid		250		350	$\overline{CE} = \overline{OE} = V_{IL}$
t_{CE}	Chip Enable to Data Valid		250		350	$\overline{OE} = V_{IL}$
t_{OE}	Output Enable to Data Valid		100		125	$\overline{CE} = V_{IL}$
t_{DF}	Output Enable to Output Float	0	85	0	105	$\overline{CE} = V_{IL}$
t_{OH}	Output Hold from Chip Enable, Addresses, or Output Enable, whichever occurred first	0		0		$\overline{CE} = \overline{OE} = V_{IL}$

Capacitance[1]

Symbol	Parameter	Typ.	Max.	Unit	Conditions
C_{IN}	Input Capacitance	4	6	pF	$V_{IN} = 0V$
C_{OUT}	Output Capacitance	8	12	pF	$V_{OUT} = 0V$

A.C. Test Conditions

Output Load: 1 TTL gate and C_L = 100 pF
Input Rise and Fall Times: ≤ 20ns
Input Pulse Levels: 0.45V to 2.4V
Timing Measurement Reference Level:
Inputs 1V and 2V
Outputs 0.8V and 2V

A.C. Waveforms

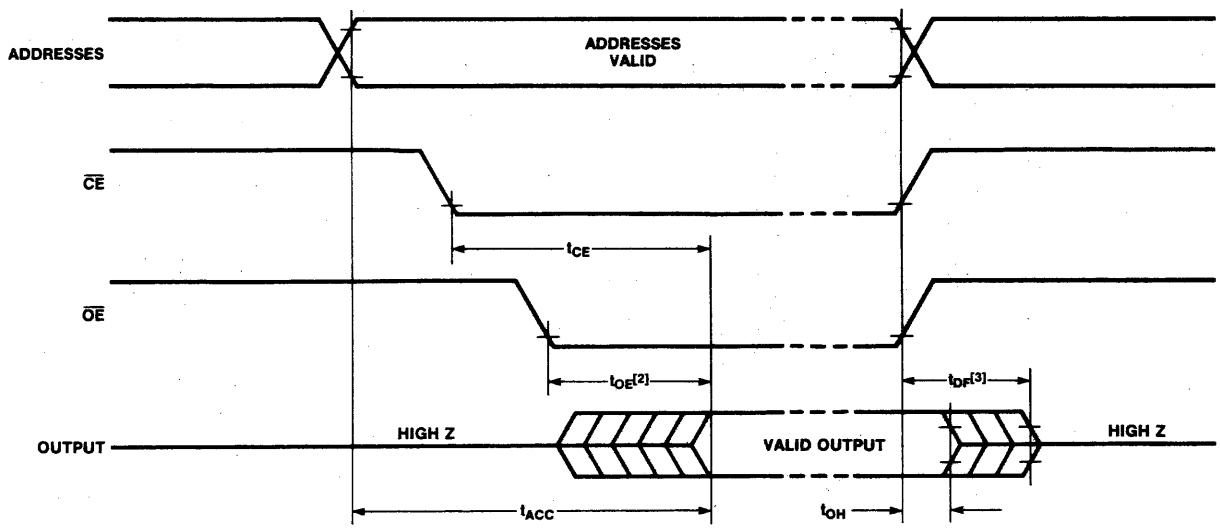

NOTES:
1. THIS PARAMETER IS SAMPLED AND IS NOT 100% TESTED.
2. $\overline{OE}$ MAY BE DELAYED TO $t_{ACC} - t_{OE}$ AFTER THE FALLING EDGE OF $\overline{CE}$ WITHOUT IMPACT ON t_{ACC}.
3. t_{DF} IS SPECIFIED FROM $\overline{OE}$ OR $\overline{CE}$, WHICHEVER OCCURS FIRST.

© IC MASTER 1984

seeq

M52B13/M52B13H
(Military Temperature Range)

E52B13/E52B13H
(Extended Temperature Range)

16K Electrically Erasable E^2 ROM

PRELIMINARY DATA SHEET

November 1983

Features

- **Full Military and Extended Temperature Range**
  - **M52B13/M52B13H: -55 to 125° C**
  - **E52B13/E52B13H: -40 to 85° C**
- **Input Latches**
- **5V ± 10% 2K X 8 E^2ROM**
- **1 ms (52B13H) or 9 ms Byte TTL Erase/Byte Write**
- **10,000 Erase/Write Cycles per Byte**
- **Chip Erase and Byte Erase**
- **Silicon Signature™ and DiTrace™**
- **Fast Read Access Time — 250 ns**
- **Infinite Number of Read Cycles**
- **JEDEC Approved Byte Wide Memory Pinout**
- **M2816 E^2 Compatible**

Description

SEEQ's M52B13 and E52B13 are 2048 x 8, 5 volt electrically erasable, read only memories (E^2ROM) which are specified over the military and extended temperature range respectively. They have input latches on all addresses, data, and control (chip and output) lines. In addition, for applications requiring fast byte write time (1 msec), an M52B13H and E52B13H are also available. Data is latched and electrically written by a TTL (or a 21 V pulse for the M52B13/E52B13) pulse on the Write Enable pin. Once written, which requires under 10 ms, there is no limit to the number of times data may be read. Both byte and chip erase modes are available. The erasure time in either mode is under 10 ms, and each byte may be erased and written up to 10,000 times.

The M52B13 is pin for pin compatible to the M2816 and SEEQ's M5213. For system upgrades of these older generation E^2ROMs, the M52B13 is specified over the full −55 to +125° C temperature range and has an access time of 250 ns. The M52B13 is available in a 28 pin cerdip package.

Block Diagram

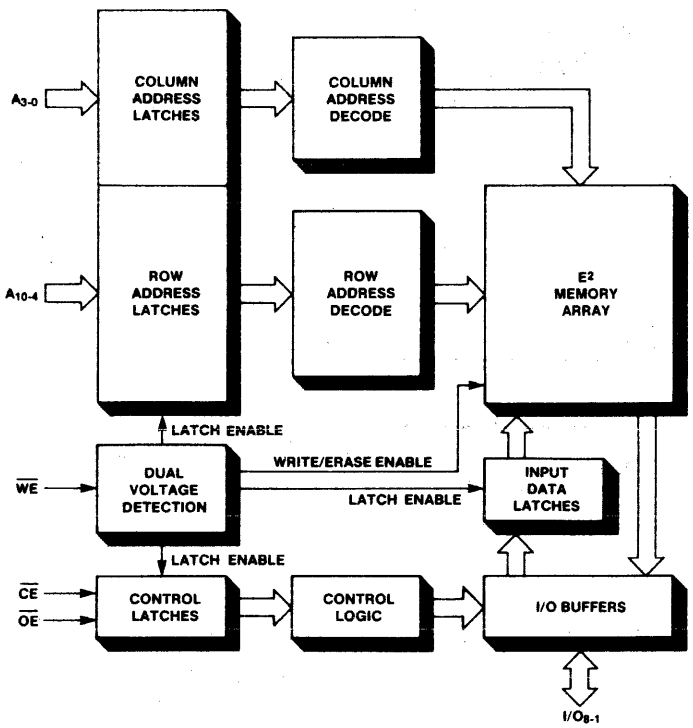

Pin Configuration

M52B13/E52B13

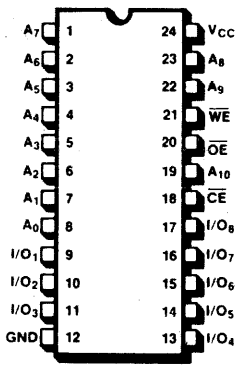

Pin Names

A_0-A_{10}	ADDRESSES
$\overline{CE}$	CHIP ENABLE
$\overline{OE}$	OUTPUT ENABLE
$\overline{WE}$	WRITE ENABLE
I/O	DATA INPUT (WRITE OR ERASE) DATA OUTPUT (READ)

seeq Technology, Incorporated 1849 Fortune Drive, San Jose, California 95131 • (408) 942-1990

© IC MASTER 1984

52B13/52B13H Specification Differences

Except for the functional differences noted here, the 52B13 and 52B13H operate to the same specifications, including the TTL W/E mode.

Symbol	Function/Parameter	52B13		52B13H		Units
		Min.	Max.	Min.	Max.	
t_{WP}	Write Enable Pulse Width					
	Byte Write/Erase	9		1		ms
	Chip Erase	9		9		ms
V_{WE}	$\overline{WE}$ Write/Erase Voltage High Voltage Mode	14	22	Not Applicable		V

Power Up/Down Considerations

SEEQ's "52B" E^2 family has internal circuitry to minimize false erase or write during system V_{CC} power up or down. This circuitry prevents writing or erasing under any one of the following conditions:

1. *V_{CC} is less than 3 V.*
2. *A negative Write Enable transition has not occurred when V_{CC} is between 3 V and 5 V.*

Under the above conditions, the outputs are in a high impedance state.

© IC MASTER 1984

M52B13/M52B13H
E52B13/E52B13H

Absolute Maximum Stress Ratings*

Temperature
Storage ..... *-65° C to +150° C*
Under Bias ..... *-65° C to +135° C*
All Inputs or Outputs with
Respect to Ground ..... *+7V to -0.6V*
WE During Writing/Erasing
with Respect to Ground ..... *+22V to -0.3V*
Duration of WE Supply at
22V During W/E Inhibit ..... *24 Hours*

**COMMENT: Stresses above those listed under "Absolute Maximum Ratings" may cause permanent damage to the device. This is a stress rating only and functional operation of the device at these or any other conditions above those indicated in the operational sections of this specification is not implied. Exposure to absolute maximum rating conditions for extended periods may affect device reliability.*

Recommended Operating Conditions

	Read Mode	Byte Write or Erase Mode	Chip Erase Mode
V_{CC} Supply Voltage	5 V ± 10%	5 V ± 10%	5 V ± 10%
Temperature Range: M52B13/M51B13H	-55 to +125° C	-55 to +125° C	-55 to +100° C
E52B13/E51B13H	-40 to +85° C	-40 to +85° C	-40 to ±85° C

D.C. Operating Characteristics During Read or Write/Erase

Symbol	Parameter	Min.	Nom.[1]	Max.	Unit	Test Conditions
I_{IN}	Input Leakage Current			10	μA	$V_{IN} = V_{CC}$ Max.
I_O	Output Leakage Current			10	μA	$V_{OUT} = V_{CC}$ Max.
I_{WE}	Write Enable Leakage Read Mode			10	μA	$\overline{WE} = V_{IH}$
	TTL W/E Mode			10	μA	$\overline{WE} = V_{IL}$
	High Voltage W/E Mode [2]			1.5	mA	$\overline{WE}$ = 22V, $\overline{CE} = V_{IL}$
	High Voltage W/E Inhibit Mode [2]			1.5	mA	$\overline{WE}$ = 22V, $\overline{CE} = V_{IH}$
	Chip Erase — TTL Mode			10	μA	$\overline{WE} = V_{IL}$
	Chip Erase — High Voltage Mode [2]			1.5	mA	$\overline{WE}$ = 22V
I_{CC1}	V_{CC} Standby Current		15	35	mA	$\overline{CE} = V_{IH}$
I_{CC2}	V_{CC} Active Current		50	90	mA	$\overline{CE} = \overline{OE} = V_{IL}$
V_{IL} D.C.	Input Low Voltage D.C.	-0.1		0.8	V	
V_{IL} A.C.	Input Low Voltage A.C.	-0.4			V	Time = 10 ns
V_{IH}	Input High Voltage	2		V_{CC} + 1	V	
V_{WE}	$\overline{WE}$ Read Voltage	2		V_{CC} + 1	V	
	$\overline{WE}$ Write/Erase Voltage TTL Mode	-0.1		0.8	V	
	High Voltage Mode [2]	14		22	V	
V_{OL}	Output Low Voltage			0.45	V	I_{OL} = 2.1 mA
V_{OH}	Output High Voltage	2.4			V	I_{OH} = -400 μA
V_{OE}	$\overline{OE}$ Chip Erase Voltage	14		22	V	I_{OE} = 10 μA

Notes:
1. Nominal values are for T_A = 25° C and V_{CC} = 5.0 V.
2. This mode is not available on the M52B13H/E52B13H.

© IC MASTER 1984

A.C. Operating Characteristics During Read

Symbol	Parameter	Device Number Extension	M52B13/ M52B13H Min.	M52B13/ M52B13H Max.	E52B13/ E52B13H Min.	E52B13/ E52B13H Max.	Units	Test Conditions
t_{ACC}	Address to Data Valid	-250		250		250	ns	$\overline{CE} = \overline{OE} = V_{IL}$
		-300		300		—	ns	
		-350		—		350	ns	
t_{CE}	Chip Enable to Data Valid	-250		250		250	ns	$\overline{OE} = V_{IL}$
		-300		300		—	ns	
		-350		—		350	ns	
t_{OE}[1]	Output Enable to Data Valid	-250	10	90	10	90	ns	$\overline{CE} = V_{IL}$
		-300	10	90	—	—	ns	
		-350	—	—	10	110	ns	
t_{DF}[2]	Output Enable to High Impedance	-250	0	70	0	70	ns	$\overline{CE} = V_{IL}$
		-300	0	70	—	—	ns	
		-350	—	—	0	80	ns	
t_{OH}	Output Hold	All		0		0	ns	$CE = OE = V_{IL}$
C_{IN}/C_{OUT}[3]	Input/Output Capacitance	All		10		10	pF	$V_{IN} = 0$ V for C_{IN}, $V_{OUT} = 0$ V for C_{OUT}, $T_A = 25°C$

A.C. Operating Characteristics During Write/Erase

Symbol	Parameter		Min.	Max.	Units
Q[4]	Maximum Endurance		10,000		Cycles/Byte
t_S	$\overline{CE}$, $\overline{OE}$ or Address Setup to $\overline{WE}$		50		ns
t_{DS}	Data Setup to $\overline{WE}$		0		ns
t_H[5]	$\overline{WE}$ to $\overline{CE}$, $\overline{OE}$, Address or Data Change		50		ns
t_{WP}	Write Enable, $\overline{WE}$, Pulse Width	Chip Clear — All Devices	9		ms
		Byte Modes — M52B13/E52B13	9		ms
		Byte Modes — M52B13H/E52B13H	1		ms
t_{WR}[6]	$\overline{WE}$ to Mode Change		50		ns

READ TIMING

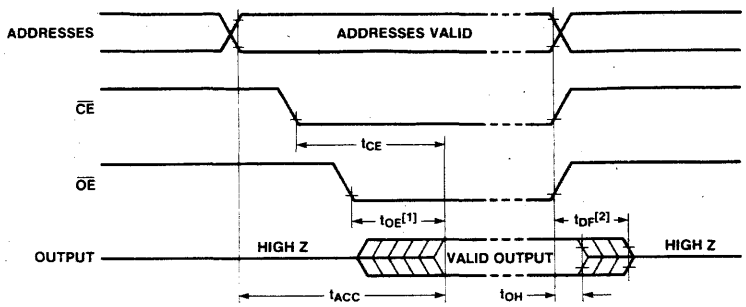

Notes:
1. $\overline{OE}$ may be delayed up to $t_{ACC} - t_{OE}$ after the falling edge of $\overline{CE}$ without impact on t_{ACC}.
2. t_{DF} is specified from $\overline{OE}$ or $\overline{CE}$, whichever occurs first.
3. This parameter is periodically sampled.
4. Maximum endurance, Q, is the number of write and erase cycles/byte.
5. After t_H, hold time, from $\overline{WE}$, the inputs $\overline{CE}$, $\overline{OE}$, $\overline{CC}$, Address and Data are latched and are "Don't Cares" until t_{WR}, Write Recovery Time, after the trailing edge of $\overline{WE}$.
6. The Write Recovery Time, t_{WR}, is the time after the trailing edge of $\overline{WE}$ that the latches are open and able to accept the next mode set-up conditions. Reference Table 1 (page 2) for mode control conditions.

© IC MASTER 1984

IC MASTER BELONGS ON YOUR BOOKSHELF

If you use IC MASTER frequently, you can obtain your own copy by ordering now. Use the order cards contained in this publication, or order by telephone as described below.

IC MASTER is a two-volume set of technical data carefully organized to direct the engineer to the integrated circuits and related products that are closest to his specific needs. It is the surest way to find the optimum device to answer an engineering design requirement. By ordering now, you won't have to borrow or search for IC MASTER the next time you need it.

Typical Use of IC MASTER

Can an engineer find out who makes a 64K dynamic RAM with an access time of 120 nanoseconds or faster in less than 30 seconds?
He can if he turns to the Memory section of IC MASTER and looks for the 64K organization (words and bits per word) that he needs.
Because each device is listed in order of access time, he can easily determine the devices that satisfy his speed requirements.

In the United States only:

You can order IC MASTER simply by charging it to your VISA or Master Card credit card. To place your order, call now: (516) 222-2500.
Ask for Extension 314.

ORDER YOUR COPY NOW

Signetics

Your Total MILITARY Supplier

Logic
54F Series
5400 Series
54LS Series
54S Series

Bipolar Memory
PROMs
IFL
RAMs

Linear LSI
Operational Amplifiers
Comparators
Timers
SMPS Control Circuits

Bipolar LSI
I/O Interface
Memory (RAM)
MicroController
Semi-Custom
Special Purpose

signetics
a subsidiary of U.S. Philips Corporation

Signetics Corporation
811 E. Arques Avenue
P.O. Box 3409
Sunnyvale, California 94088-3409
Telephone 408/739-7700

MILITARY PRODUCT GUIDE

MILITARY PRODUCTS/ PROCESS LEVELS

The Signetics MIL 38510/883 Program is organized to provide a broad selection of processing options, structured around the most commonly requested customer flows. The program is designed to provide our customers:

- Fully compliant 883B flows on all products.
- Standard processing flows to help minimize the need for custom specs.
- Cost savings realized by using standard processing flows in lieu of custom flows.
- Better delivery lead times by minimizing spec negotiation time, plus allow customers to buy product off-the-shelf or in various stages of production rather than waiting for devices started specifically to custom specs.

The following explains the different processing options available to you. Special device marking clearly distinguishes the type of screening performed. Refer to Tables 2, 3, 4 and 5.

JAN CASE OUTLINE AND LEAD FINISH	SIGNETICS MILITARY PACKAGE TYPES					
	CERAMIC					
	8-PIN	14-PIN	16-PIN	18-PIN	20-PIN	24-PIN
PB	FE	—	—	—	—	—
CB	—	F	—	—	—	—
EB	—	—	F	—	—	—
JB	—	—	—	—	—	F
DB	—	W	—	—	—	—
FB	—	—	W	—	—	—
RB	—	—	—	—	F	—
VB	—	—	—	F	—	—

All products listed are also available in Die form.

Table 1 MILITARY PACKAGE AVAILABILITY

	JS	JB	RB
	JAN Qualified		883B
54	X	X	X
54LS	X	X	X
54S	X	X	X
82	—	—	X
8T	—	—	X
93XX	—	X	X
96XX	—	—	X
Analog	—	X	X
Bipolar Memory	—	X	X
Microprocessor	—	—	X

Table 2 MILITARY SUMMARY

JAN QUALIFIED (JS and JB)

JAN Qualified product is designed to give you the optimum in quality and reliability. The JAN processing level is offered as the result of the government's product standardization programs, and is monitored by the Defense Electronic Supply Center (DESC), through the use of industry-wide procedures and specifications.

JAN Qualified products are manufactured, processed and tested in a government certified facility to Mil-M-38510, and appropriate device slash sheet specifications. Design documentation, lot sampling plans, electrical test data and qualification data for each specific part type has been approved by the Defense Electronic Supply Center (DESC) and products appear on the DESC Qualified Products List (QPL 38510).

Quality conformance inspection testing, per MIL-STD-883, Method 5005, is performed according to Mil-M-38510 as follows:

- Group A; each sublot.
- Group B; one sublot for each package type every week.
- Group C; one sublot for each microcircuit group every 13 weeks.
- Group D; one sublot for each package type every 26 weeks.

NOTE: This category of part conforms to Quality Level B (π_Q = 1.0) of MIL-HDBK-217D.

In addition to the common specs used throughout the industry for processing and testing, JAN Qualified products also possess a requirement for a standard marking used throughout the IC industry.

By implementing this space-oriented government standardization program, Signetics complies with the trend of reducing the numerous similar Source Control Drawings (SCD's). This standardized trend results in a *single* complete and comprehensive specification, a *single* product flow, and a *single* administrative effort—for both the aerospace community and for Signetics. This effort will also result in a *single* lower price. Because the list of Signetics' qualified products will change periodically, you may wish to contact your nearest Signetics' Sales Office or refer to the *Products Qualified* under Military Specification from DESC for our current update.

JAN Class S orders will be quoted with unit price only (similar to present Class B programs). There will be no lot charges for SEM inspection, electrical testing, or Group B or D qualification. All additional charges are amortized in the unit price.

Package types currently qualified are:
1) Cerdip—ceramic dual-in-line
2) Cerpac—ceramic flat pack

Government Source Inspection (GSI) is a required portion of the JAN 38510 Class S specification. No alterations to this specification may be instituted. Therefore, the only customer source inspection option is at pre-ship (verification only).

Additional program data options (such as wafer lot acceptance, attributes, Group B, D, and others) are available upon request for a nominal fee.

MIL-STD-883, LEVEL B

Processing to this option is ideal when no JAN slash sheets are released on devices required. Product is processed to MIL-STD-883 Method 5004, and is 100% electrically tested to Signetics data sheets.

Quality conformance inspection per MIL-STD-883, Method 5005, Group A, is performed on each sublot. Group A subgroup electrical parameters are those included in the detailed Signetics data book. Contact the factory for parametric subgroup assignments.

Generic quality conformance data per method 5005, Groups B, C and D, is generally available on popular device types and packages, but availability is not guaranteed. The factory must be consulted prior to ordering generic data. When available, generic data is defined as follows:

- Group B; Performed once per package type every six weeks of seal.
- Group C; Performed once per microcircuit group every 52 weeks of seal.

© IC MASTER 1984

MILITARY PRODUCT GUIDE

- Group D; Performed once per package type every 52 weeks of seal.

Quality conformance endpoint electrical parameters for Groups C and D are the Group A subgroups 1, 2, and 3.

Copies of generic data, Groups A, B, C and D, may be ordered by customers at a nominal charge.

NOTE: This category of part conforms to Quality Level B-2 (π_Q = 6.5 of MIL-HDBK-217D.

PROCESS LEVEL AND MARKING	PRE-CAP VISUAL	BURN IN	FUNCTIONAL TEST	DC/AC @ 25° C	DC @ TEMP	QPL	OFFSHORE
JS/JB JM38510XXXXX	2010, Cond. B	Yes	100%	100%	100%	Yes	No
RB SXXXX883B	2010, Cond. B	Yes	100%	100%	100%	No	Yes

JAN Class S Product inventory

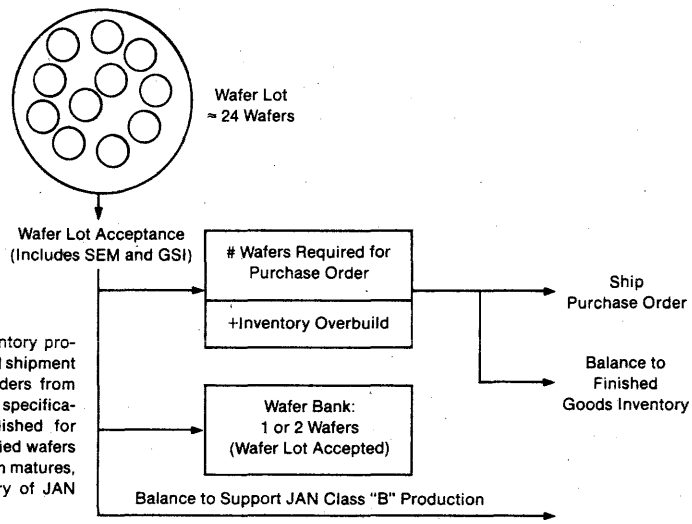

The Signetics' JAN Class S inventory program will reduce delivery time and shipment delinquencies. As continuing orders from customers are processed to this specification, inventories will be established for products in the form of pre-qualified wafers and finished parts. As the program matures, this will allow immediate delivery of JAN Class S parts.

Jan Class S Product Flow

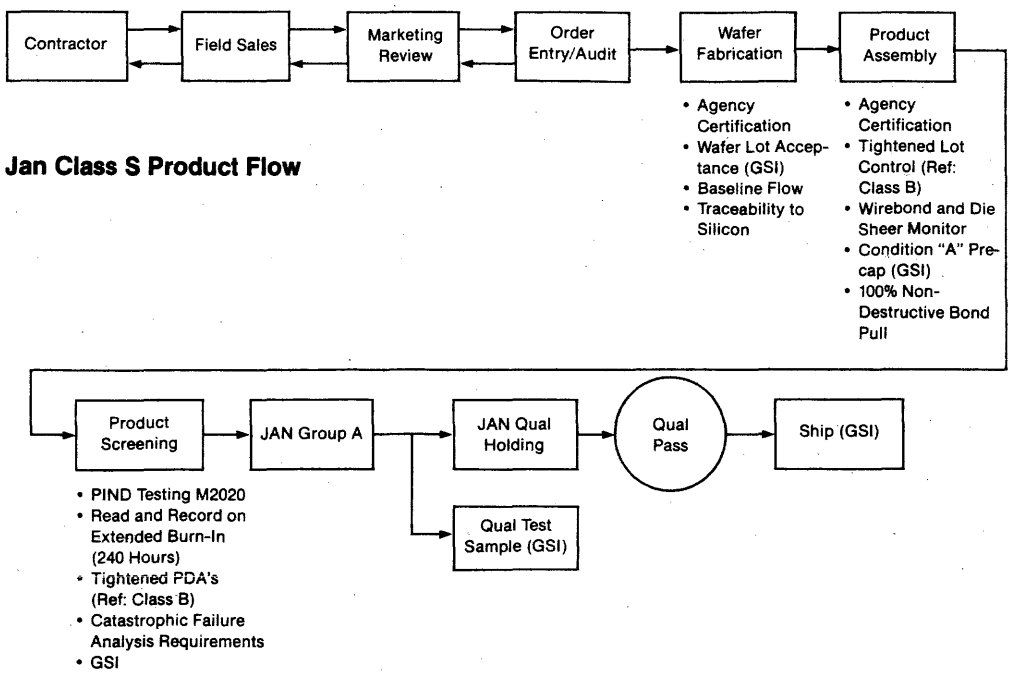

MILITARY PRODUCT GUIDE

DESCRIPTION OF REQUIREMENTS AND SCREENS	MIL-M-38510 AND MIL-STD-883 REQUIREMENTS, METHODS AND TEST CONDITIONS	REQUIREMENT	PROCESSING LEVELS		
			CLASS S	JAN QUALIFIED (JB)	883B (RB)
General Mil-M-38510 1. Pre-Certification A. Product Assurance Program B. Manufacturer's Certification	The Manufacturer shall establish and implement a Products Assurance Program Plan and provide for a manufacturer survey by the qualifying activity, Para. 3.4.1.1	—	X	X	N/A
2. Certification	Received after manufacturer has completed a successful survey, Para. 3.4.1.2	—	X	X	N/A
3. Device Qualification	Device qualification shall consist of subjecting the desired device to groups A, B, C & D of method 5005, Para. 3.4.1.2	—	X	X	N/A
4. Traceability	Traceability maintained back to a production lot Para. 3.4.6	—	X	X	X
5. Country of Origin	Devices must be manufactured, assembled, and tested within the U.S. or its territories, Para. 3.2.1	—	X	X	N/A
Screening Per Method 5004 of Mil-Std-883					
6. Non-Destructive Bond Pull	2023	100%	×	N/A	N/A
7. Internal Visual (Precap)	2010, Cond. A or B	100%	A	B	B
8. Stabilization Bake	1008, Cond. C Min	100%	×	×	×
9. Temperature Cycling	1010, cond. C; (10 cycles, −65°C to +150°C)	100%	×	×	×
10. Constant Acceleration	2001, Cond. E; (30kg in Yl Plane)	100%	×	×	×
11. Visual Inspection	There is no test method for this screen; it is intended only for the removal of "Catastrophic Failures" defined as "Missing Leads, Broken Packages or Lids Off."	100%	×	×	×
12. Seal (Hermeticity)					
A. Fine	Cond. A or B (5.0×10^{-8}CC/Sec)	100%	×	×	×
B. Gross	Cond. C Min.	100%	×	×	×
13. Marking	Fungus inhibiting ink	100%	X	×	×
14. Particle Impart Noise Test	2020, Cond. A; per Paragraph 4.6.3 of MIL-M-38510	100%	×	N/A	N/A
15. Radiographic	2012; two views	100%	×	N/A	N/A
16. Interim Electricals (Pre Burn-In)	Per applicable Device Specification	100%	×	Optional	Optional
17. Burn-In	1015, Cond. as specified (160 hrs. Min at 125°C)	100%	240 hrs.	×	×

Table 5 REQUIREMENTS AND SCREENING FLOWS FOR STANDARD PRODUCTS

© IC MASTER 1984

MILITARY PRODUCT GUIDE

DESCRIPTION OF REQUIREMENTS AND SCREENS	MIL-M-38510 AND MIL-STD-883 REQUIREMENTS, METHODS AND TEST CONDITIONS	REQUIREMENT	PROCESSING LEVELS		
			CLASS S	JAN QUALIFIED (JB)	883B (RB)
18. Final Electricals	Per applicable Device Specification	100%	100% Read & Record	Slash Sheet	Data Sheet
a. Static Tests @25°C	Sub Group 1		×	×	×
b. Static Tests @ +125°C	Sub Group 2		×	×	×
c. Static Tests @ −55°C	Sub Group 3		×	×	×
d. Dynamic Test @25°C	Sub Group 4 (for Linear Products mainly)		×	×	×
e. Functional Test @25°C	Sub Group 7		×	×	×
f. Switching Test @25°C	Sub Group 9		×	×	×
g. Switching Test Temperature	Sub Groups 10, 11 (as applicable)		×	N/A	N/A
19. Percent Defective Allowable (PDA)	A PDA of 10% is a normal requirement applied against the static tests @25°C (A-1). This is controlled by the slash sheets for JAN products. For RB 10% is standard.	10%	5% 3% Functional	×	×
20. External Visual	2009	100%	×	×	×
Quality Conformance Inspection per Method 5005 of Mil-Std 883	**ATTRIBUTE DATA ONLY**				
21. Group A	Electrical Tests—Final Electricals (#14 above) repeated on a sample basis (Sub Groups 1 thru 12 as specified) performed in line with final electricals.	Each sublot	×	×	×
22. Group B	Package functional and constructional related test (package dimensions, resistance to solvents, internal visual & mechanical, bond strength & solderability).	Each pkg. type	Each sublot	Each week of seal	Generic
23. Group C	Die related tests (1,000 hr. operating life, temperature cycling, & constant acceleration).	Each μcircuit group	N/A	Each 13 weeks of seal	Generic
24. Group D.	Package related tests (physical dimensions, lead fatigue, thermal shock, temperature cycle, moisture resistance, mechanical shock, vibration, variable frequency, constant acceleration & salt atmosphere).	Each pkg. type	Each 26 weeks of seal	Each 26 weeks of seal	Generic

Table 5 REQUIREMENTS AND SCREENING FLOWS FOR STANDARD PRODUCTS (Continued)

MILITARY PRODUCT GUIDE

LINEAR DEVICES

DEVICE	DESCRIPTION	PACKAGE
		DIP
	OPERATIONAL AMPLIFIERS	
LH2101A	Dual Op Amp	F
LM101/A	High-Performance Op Amp	F, FE
SE532	Dual Op Amp	FE
SE5512	Dual Op Amp	FE
SE5532	Dual Op Amp	FE
SE5532A	Dual Op Amp	FE
SE5534	Low-Noise Op Amp	FE
SE5534A	Low-Noise Op Amp	FE
SE5539	High Frequency Op Amp	F
	COMPARATORS	
SE521	High-Speed Comparator	F
LM139/A	Quad Voltage Comparator	F
	TIMERS	
SE555	Timer	F, FE
SE556-1	Dual Timer	F
	D to A CONVERTERS	
SE5018	8-Bit μP-Comp DAC	F
	SMPS CONTROL CIRCUITS	
SE5560	SMPS Controller	F

JAN M—38510			
DEVICE	SLASH SHEET	PKG	QUAL STATUS
SE555	10903BCA	F	QPL 1
SE555	10903BPA	FE	QPL 1
SE556-1	10902BCA	F	QPL 1
LH2101A	10105BEA	F	QPL 1
LM101A	10103BCA	F	QPL 1
LM101A	10103BPA	FE	QPL 1

NOTE:
F = Cerdip
FE = Cerdip 8-pins

© IC MASTER 1984

MILITARY PRODUCT GUIDE

LINEAR INDUSTRY CROSS REFERENCE

FAIRCHILD	SIGNETICS
μA 139	LM139A
μA 101	LM101
μA 101A	LM101A
MC1555	SE555
μA 556	SE556-1

NATIONAL	SIGNETICS
LM139A	LM139A
LH2101A	LH2101A
LM101A	LM101A
LM555	SE555

RAYTHEON	SIGNETICS
LM139A	LM139A
LM101A	LM101A
RM555	SE555

MOTOROLA	SIGNETICS
MLM101A	LM101A
MC3556	SE556-1

T.I.	SIGNETICS
SN52101A	LM101A
SN52555	SE555
SE556	SE556-1

BIPOLAR LSI

	BASE	PACKAGE	DESCRIPTION
I/O Interface	8X371	I, G	8-Bit Bidirectional I/O Port for 8X305
	8X372	I, G	8-Bit Bidirectional I/O Port for 8X305
	8X374	I, G	8-Bit I/O Port with Parity for 8X305
	8X376	I, G	8-Bit Bidirectional I/O Port for 8X305
	8X382	I, G	4-In/4-Out I/O Port for 8X305
Memory (RAM)	8X350	F, G	256 × 8-Bit Bipolar RAM for 8X305
MicroController	8X305	I, W	8-Bit Microcontroller
Semicustom Circuits	8A 1200	I, G	ISL Gate Array
	8A 1260	I, G	ISL Gate Array
	8A 1542	I, G	ISL Gate Array
	8A 1664	I, G, W	ISL Gate Array
	8A 1864	I, G, W	ISL Gate Array
	8A 2176	I, G, W	ISL Gate Array
Special Purpose Circuit	8X310	I, G	Interrupt Control Coprocessor for 8X305
	8X360	I, G	Memory Address Director for 8X305
	8X60	F, G	FIFO RAM Controller
Development Hardware and Kits		8X300KT1	8X305 Evaluation and Prototyping Kit
		EZ-PRO	Development System for 8X305 available from American Automation
		Programmer (I/O Port)	Available from Data I/O or American Automation
Development Software		8X300AS1	8X300 Cross-assembler (MCCAP) FORTRAN Source Program

© IC MASTER 1984

MILITARY PRODUCT GUIDE

LOGIC—5400 SERIES

DEVICE	DESCRIPTION	JM38510 SLASH SHEET	JAN QUALIFIED		MIL-STD-883	
			DIP	FLAT-PACK	DIP	FLAT-PACK
5400	Quad 2-Input NAND Gate	/00104	1	1	F	W
5404	Hex Inverter	/00105	1	1	F	W
5420	Dual 4-Input NAND Gate	/00102	1	1	F	W
5426	Quad 2-Input NAND Gate with o/c	/00805	1	—	F	—
5432	Quad 2-Input OR Gate	/16101	1	1	F	W
5473	Dual J-K Master-Slave Flip-Flop	/00202	1	1	F	W
5474	Dual D-Type Edge-Triggered Flip-Flop	/00205	1	1	F	W
5476	Dual J-K Master-Slave Flip-Flop	/00204	1	1	F	W
5485	4-Bit Magnitude Comparator	/15001	1	1	F	W
5493	4-Bit Binary Counter	/01302	1	1	F	W
5496	5-Bit Shift Register	/00902	1	1	F	W
54121	Monostable Multivibrator	/01201	1	1	F	W
54123	Retriggerable Monostable Multivibrator	/01203	1	1	F	W
54126	Quad 3-State Buffer	/15302	1	1	F	—
54151	8-Line to 1-Line MUX	/01406	1	1	F	W
54153	Dual 4-Line to 1-Line MUX	/01403	1	1	F	W
54154	4-to-16 Decoder/DeMUX	/15201	1	1	F	W
54157	Quad 2-to-1 MUX	/01405	1	1	F	W
54161	Synchronous 4-Bit Binary Counter	/01306	1	1	F	W
54163	Synchronous 4-Bit Binary Counter	/01304	1	1	F	W
54164	8-Bit Parallel-Out Serial Shift Register	/00903	1	—	F	—
54174	Hex D-Type Flip-Flop with Clear	/01701	1	1	F	W
54175	Quad D-Type Edge-Triggered Flip-Flop	/01702	1	1	F	W
54180	8-Bit Odd/Even Parity Checker	/01901	1	1	F	W
54193	Synchronous 4-Bit Binary Up/Down Counter	/01309	1	1	F	W
54365A	Hex Buffer w/Common Enable (3-State)	/16301	1	—	F	—
54366A	Hex Buffer w/Common Enable (3-State)	/16302	1	—	F	—
54367A	Hex Buffer, 4-Bit and 2-Bit (3-State)	/16303	1	—	F	—
54368A	Hex Buffer, 4-Bit and 2-Bit (3-State)	/16304	1	—	F	—
9309	Dual 4-Input Multiplexer	/01404	1	1	F	W

© IC MASTER 1984

MILITARY PRODUCT GUIDE

LOGIC—54LS SERIES

DEVICE	DESCRIPTION	JM38510 SLASH SHEET	JAN QUALIFIED		MIL-STD-883		
			DIP	FLAT-PACK	DIP	LCC	FLAT-PACK
54LS00	Quad 2-Input NAND Gate	/30001	1	1	F	G	W
54LS02	Quad 2-Input NOR Gate	/30301	1	1	F	G	W
54LS04	Hex Inverter	/30003	1	1	F	G	W
54LS08	Quad 2-Input AND Gate	/31004	1	1	F	G	W
54LS10	Triple 3-Input NAND Gate	/30005	1	1	F	G	W
54LS14	Hex Schmitt Trigger	/31302	1	1	F	—	W
54LS20	Dual 4-Input NAND Gate	/30007	1	1	F	G	W
54LS32	Quad 2-Input OR Gate	/30501	1	1	F	—	W
54LS37	Quad 2-Input NAND Buffer	/30202	1	1	F	—	W
54LS42	BCD-to-Decimal Decoder	/30703	1	1	F	G	W
54LD73	Dual J-K Master-Slave Flip-Flop	/30101	1	1	F	—	W
54LS74A	Dual D-Type Edge-Triggered Flip-Flop	/30102	1	1	F	—	W
54LS75	Quad Bistable Latch	/31601	1	1	F	—	W
54LS85	4-Bit Magnitude Comparator Gate	/31101	1	1	F	—	W
54LS86	Quad 2-Input Exclusive-OR Gate	/30502	1	1	F	G	W
54LS90	Decade Counter	/31501	1	1	F	—	W
54LS93	4-Bit Binary Counter	/31502	1	1	F	—	W
54LS95B	4-Bit Left-Right Shift Register	/30603	1	1	F	—	W
54LS96	5-Bit Shift Register	/30604	1	1	F	—	W
54LS107	Dual J-K Master-Slave Flip-Flop	/30108	1	1	F	—	W
54LS109	Dual J-K Positive Edge-Triggered Flip-Flop	/30109	1	1	F	G	W
54LS112	Dual J-K Negative Edge-Triggered Flip-Flop	/30103	1	1	F	—	W
54LS113	Dual J-K Negative Edge-Triggered Flip-Flop	/30104	1	1	F	—	W
54LS125	Quad Bus Buffer Gate w/3-State Outputs	/32301	1	1	F	—	W
54LS132	Quad Schmitt Trigger	/31303	1	1	F	—	W
54LS138	3-to-8 Line Decoder/DeMUX	/30701	1	1	F	G	W
54LS139	Dual 2-to-4 Line Decoder/DeMUX	/30702	—	—	F	G	W
54LS153	Dual 4-Line to 1-Line MUX	/30902	1	1	F	G	W
54LS157	Quad 2-Input Data Selector (non-inverting)	—	—	—	F	—	W
54LS161A	Synchronous 4-Bit Binary Counter	/31504	1	1	F	G	W
54LS163A	Synchronous 4-Bit Binary Counter	/31512	1	1	F	G	W
54LS164	8-Bit Parallel-Out Serial Shift Register	/30605	1	1	F	—	W
54LS174	Hex D-Type Flip-Flop with Clear	/30106	1	1	F	G	W
54LS175	Quad D-Type Edge-Triggered Flip-Flop	/30107	1	1	F	G	W
54LS190	Synchronous Up/Down Counter (BCD)	/31513	1	1	F	—	W
54LS191	Synchronous Up-Down Counter (Binary)	/31509	1	1	F	—	W

NOTE:
1 = Level 1 Qualification
LCC = Leadless Chip Carrier JEDEC standard 20-Pin

© IC MASTER 1984

MILITARY PRODUCT GUIDE

LOGIC—54LS SERIES (Continued)

DEVICE	DESCRIPTION	JM38510 SLASH SHEET	JAN QUALIFIED		MIL-STD-883		
			DIP	FLAT-PACK	DIP	LCC	FLAT-PACK
54LS192	Synchronous Decade Up/Down Counter	/31507	1	1	F	—	W
54LS193	Synchronous 4-Bit Binary Up/Down Counter	/31508	1	1	F	G	W
54LS194A	4-Bit Bidirectional Universal Shift Register	/30601	•	•	F	G	W
54LS195A	4-Bit Parallel-Access Shift Register	/30602	1	1	F	—	W
54LS197	Presettable Binary Counter/Latch (8291)	/32002	1	1	F	—	W
54LS240	Octal Inverter Buffer 3-State	/32401	•	—	F	G	—
54LS241	Octal Buffer 3-State	/32402	•	—	F	G	—
54LS244	Octal Buffer 3-State	/32403	•	—	F	G	—
54LS245	Octal TCRS 3-State	/32801	1	—	F	G	—
54LS257A	Quad 2-Line to 1-Line Data Selector/MUX	/30906	1	1	•	G	•
54LS258A	Quad 2-Line to 1-Line Data Selector/MUX	/30907	1	1	•	—	•
54LS266	Quad Exclusive-NOR Gate	/30303	1	1	F	—	W
54LS273	Octal D Flip-Flop	/32501	1	•	F	G	—
54LS290	Decade Counter	/32003	1	1	F	—	W
54LS293	4-Bit Binary Counter	/32004	1	1	F	—	W
54LS295B	4-Bit Right-Shift Left-Shift Register	/30606	1	1	F	—	W
54LS298	Quad 2-Input MUX with Storage	/30909	1	1	F	—	W
54LS363	Octal Latch for MOS Interface (3-State)	—	—	—	F	G	—
54LS364	Octal Flip-Flop for MOS Interface (3-State)	—	—	—	F	G	—
54LS365A	Hex Buffer w/Common Enable (3-State)	/32201	1	1	F	—	W
54LS367A	Hex Buffer, 4-Bit and 2-Bit (3-State)	/32203	1	1	F	G	W
54LS368A	Hex Buffer, 4-Bit and 2-Bit (3-State)	/32204	1	1	F	—	W
54LS373	Octal Transparent Latch (3-State)	/32502	1	—	F	G	—
54LS374	Octal D Flip-Flop (3-State)	/32503	1	—	F	G	—
54LS375	Quad Latch	/31604	1	1	F	G	W
54LS377	Octal D Flip-Flop Clock Enable	—	—	—	F	—	—
54LS393	Dual Binary Ripple Counter	/32702	1	1	F	—	W
54LS395A	4-Bit Cascadeable Shift Register (3-State)	/30607	1	1	F	—	W
54LS490	Dual Decade Ripple Counter	/32703	1	1	F	—	W
54LS670	4 × 4 Register File (3-State)	/31901	•	•	F	G	W

NOTE:
1 = Level 1 Qualification
LCC = Leadless Chip Carrier JEDEC standard 20-Pin
• = In process

© IC MASTER 1984

MILITARY PRODUCT GUIDE

LOGIC—54S SERIES

DEVICE	DESCRIPTION	JM38510 SLASH SHEET	JAN QUALIFIED		MIL-STD-883		
			DIP	FLAT-PACK	DIP	LCC	FLAT-PACK
54S00	Quad 2-Input NAND Gate	/07001	1	1	F	G	W
54S02	Quad 2-Input NOR Gate	/07301	1	1	F	G	W
54S04	Hex Inverter	/07003	1	1	F	—	W
54S08	Quad 2-Input AND Gate	/08003	1	1	F	G	W
54S10	Triple 3-Input NAND Gate	/07005	1	1	F	G	W
54S11	Triple 3-Input NAND Gate	/08001	1	1	F	—	W
54S40	Dual 4-Input NAND Buffer	/07201	1	1	F	—	W
54S51	Bual 2-Wide 2-Input A01 Gate	/07401	1	1	F	—	W
54S74	Dual D-Type Edge-Triggered Flip-Flop	/07101	1	1	F	G	W
54S85	4-Bit Magnitude Comparator	/08201	1	—	F	—	—
54S86	Quad 2-Input Exclusive-OR Gate	/07501	1	1	F	G	W
54S112	Dual J-K Negative Edge-Triggered Flip-Flop	/07102	1	1	F	—	W
54S113	Dual J-K Negative Edge-Triggered Flip-Flop	/07103	2	2	F	—	W
54S133	13-Input NAND Gate	/07009	1	1	F	—	W
54S140	Dual 4-Input NAND Line Driver	/08101	1	1	F	—	W
54S151	8-Line to 1-Line MUX	/07901	1	1	F	—	W
54S153	Dual 4-Line to 1-Line MUX	/07902	1	1	F	G	W
54S157	Quad 2-Input Data Selector (non-inverting)	/07903	1	1	F	—	W
54S158	Quad 2-Input Data Selector (inverting)	/07904	1	1	F	—	W
54S181	4-Bit Arithmetic Logic Unit	/07801	1	—	F	—	•
54S240	Octal 3-State Buffer	—	—	—	F	G	—
54S241	Octal 3-State Buffer	—	—	—	F	G	—
54S244	Octal 3-State Buffer	—	—	—	F	G	—
54S273	Octal D-Type Flip-Flop with Reset	—	—	—	F	—	—
54S374	Octal D-Type Flip-Flop (3-State)	—	—	—	F	—	—

NOTE:
1 = Level 1 Qualification
LCC = Leadless Chip Carrier JEDEC standard 20-Pin

MILITARY PRODUCT GUIDE

BIPOLAR MEMORY

DEVICE	ORGANIZATION	PACKAGE*		OUTPUT CIRCUIT	NUMBER OF PINS
PROMs					
82S23	32 × 8	F	R	OC	16
82S115	512 × 8	F	R	TS	24
82S123	32 × 8	F	W	TS	16
82S126	256 × 4	F	W	OC	16
82S129	256 × 4	F	R	TS	16
82S130	512 × 4	F	R	OC	16
82S131	512 × 4	F	R	TS	16
82S137	1024 × 4	F	R	TS	18
82S141	512 × 8	F	R	TS	24
82S147	512 × 8	F	R	TS	20
82S181	1024 × 8	F	R,G	TS	24
82S185	2048 × 4	F	R	TS	18
82S2708	1024 × 8	F	R	TS	24
82S191	2048 × 8	F	R,G	TS	24
82S321	4096 × 8	F	R	TS	24
IFL					
82S100	16 × 48 × 8	F	R,G	TS	28
82S101	16 × 48 × 8	F	R	OC	28
82S102	16 × 9	F	R	OC	28
82S103	16 × 9	F	R	TS	28
82S104	16 × 48 × 8	F	R	OC	28
82S105	16 × 48 × 8	F	R	TS	28
82S150	18 × 12	F	R	OC	20
82S151	18 × 12	F	R	TS	20
82S153	18 × 32 × 10	F	R,G	TS	20
82S154	16 × 32 × 12	F	R	OC	20
82S155	16 × 32 × 12	F	R	TS	20
82S156	16 × 32 × 12	F	R	OC	20
82S157	16 × 32 × 12	F	R	TS	20
82S158	16 × 32 × 12	F	R	OC	20
82S159	16 × 32 × 12	F	R	TS	20
RAMs					
82S189	16 × 4	F	R	TS	16
54S301	256 × 1	F	R	OC	16
82S09	64 × 9	F	R	OC	28
82S19	64 × 9	F	R	OC	28
82S16	256 × 1	F	R	TS	16
82S212	256 × 9	F	R	TS	22
8X350	256 × 8	F	W	TS	22

*R = BeO Flatpack
F = Cerdip
G = Leadless 28-Pin
W = Ceramic Flatpack

JAN M—38510			
DEVICE	SLASH SHEET	PKG	QUAL STATUS
82S23	/20701	F	QPL 1
82S123	/20702	F	QPL 1
82S126	/20301	F	QPL 1
82S129	/20302	F	QPL 1
82S130	/20401	F	QPL 1
82S131	/20402	F	QPL 1
82S137	/20602	F	QPL 1
82S141	/20802	F	QPL 1
82S115	/20803	F	QPL 1
82S181	/20904	F	QPL 1
82S185	/20902	F	QPL 1
82S191	/21002	F	QPL 1
82S100	/(Draft)	F	Planned

© IC MASTER 1984

MILITARY PRODUCT GUIDE

BIPOLAR MEMORY CROSS REFERENCE

AMD	SIGNETICS
2700/27LS00	82S16
27S08/27LS08	82S23
27S09/27LS09	82S123
27S10	82S126
27S11	82S129

FAIRCHILD	SIGNETICS
93417	82S126
93419	82S09
93421	82S16
93427	82S129
93436	82S130
93446	82S131
93448	82S141
93453	82S137
93457	82S126
93467	82S129
93451	82S181
	82S191

HARRIS	SIGNETICS
HM7602-2	82S23
HM7603-2	82S123
HM7608-2	82S2708
HM7610-2	82S126
HM7611-2	82S129
HM7620-2	82S130
HM7621-2	82S131
HM7641-2	82S141
HM7643-2	82S137
HM7647-2	82S115
HM7681-2	82S181
HM7685-2	82S185
HM76161	82S191

INTEL	SIGNETICS
2708	82S2708
3106/A	82S16
3601	82S126
3602	82S130
3605	82S136
3622	82S131
3624	82S141
3625	82S137
3628	82S181
3636	82S191

INTERSIL	SIGNETICS
5523A	82S16
5600	82S23
5603A	82S126
5604	82S130
5610	82S123
5623A	82S129
5624	82S131
5625	82S141
56526	82S137

MOTOROLA	SIGNETICS
4256	82S16
5005	82S126

MMI	SIGNETICS
5300-1	82S126
5301-1	82S129
5305-1	82S130
5306-1	82S131
5330	82S23
5331	82S123
5341	82S141
5353	82S137
5381	82S181
5385	82S2708
5531	82S16

NATIONAL	SIGNETICS
54S188	82S23
54S287	82S129
54S288	82S123
54S387	82S126
54S570	82S130
54S571	82S131
54S573	82S137
87S296	82S141
87S181	82S181
87S191	82S191

T.I.	SIGNETICS
54S188	82S23
54S189	54S189
54S287	82S129
54S288	82S123
54S387	82S126
54S474	82S141
54S476	82S137
54S478	82S181

© IC MASTER 1984

SALES OFFICES

SIGNETICS HEADQUARTERS

811 East Arques Avenue
P.O. Box 409
Sunnyvale, California 94086
Phone: (408) 739-7700

ARIZONA
Phoenix
Phone: (602) 265-4444

CALIFORNIA
Canoga Park
Phone: (213) 340-1431

Cupertino
Phone: (408) 725-8100

Inglewood
Phone: (213) 670-1101

Irvine
Phone: (714) 833-8980
(213) 588-3281

San Diego
Phone: (619) 560-0242

COLORADO
Aurora
Phone: (303) 751-5011

CONNECTICUT
Danbury
Phone: (203) 748-3722

FLORIDA
Clearwater
Phone: (813) 796-7086

Ft. Lauderdale
Phone: (305) 486-6300

GEORGIA
Atlanta
Phone: (404) 953-0067

ILLINOIS
Schaumburg
Phone: (312) 843-7805

INDIANA
Kokomo
Phone: (317) 453-6462

KANSAS
Overland Park
Phone: (913) 341-8181

MARYLAND
Glen Burnie
Phone: (301) 787-0220

MASSACHUSETTS
Woburn
Phone: (617) 938-1000

MICHIGAN
Farmington Hills
Phone: (313) 476-1610

MINNESOTA
Edina
Phone: (612) 835-7455

NEW JERSEY
Parsippany
Phone: (201) 334-4405

NEW YORK
Liverpool
Phone: (315) 451-5470

Melville
Phone: (516) 752-0130

Wappingers Falls
Phone: (914) 297-4074

NORTH CAROLINA
Raleigh
Phone: (919) 851-2013

OHIO
Worthington
Phone: (614) 888-7143

PENNSYLVANIA
Horsham
Phone: (215) 443-5500

TENNESSEE
Greeneville
Phone: (615) 639-0251

TEXAS
Austin
Phone: (512) 458-2591

Richardson
Phone: (214) 644-3500

CANADA
SIGNETICS CANADA, LTD.
Etobicoke, Ontario
Phone: (416) 622-9314

Ottawa, Ontario
Tech-Trek, Ltd.
Phone: (613) 230-3927

REPRESENTATIVES

ALABAMA
Huntsville
Electronic Sales, Inc.
Phone: (205) 533-1735

ARIZONA
Thom Luke Sales, Inc.
Phone: (602) 941-1901

CALIFORNIA
Los Gatos
Sierra Technology
Phone: (714) 354-1626

San Diego
Mesa Engineering
Phone: (619) 278-8021

CANADA
Etobicoke
Tech-Trek, Ltd.
Phone: (416) 626-6676

Pointe Claire
Tech-Trek, Ltd.
Phone: (514) 697-3385

CONNECTICUT
Yalesville
Kanan Associates
Phone: (203) 265-2404

ILLINOIS
Schaumburg
Micro-Tex, Inc.
Phone: (312) 885-1131

IOWA
Marion
Rep. Associates Corp.
Phone: (319) 373-0152

KANSAS
Kansas City
B. C. Electronic Sales
Phone: (913) 342-1211

MASSACHUSETTS
Reading
Kanan Associates
Phone: (617) 944-8484

MICHIGAN
Bloomfield Hills
Enco Marketing
Phone: (313) 642-0203

MINNESOTA
Minneapolis
High Technology Sales
Phone: (612) 888-8088

MISSOURI
Bridgeton
B. C. Electronic Sales
Phone: (314) 291-1101

NEW JERSEY
East Hanover
Emtec Sales, Inc.
Phone: (201) 428-0600

NEW MEXICO
Albuquerque
Power Enterprises
Phone: (505) 298-1918

NEW YORK
Ithaca
Bob Dean, Inc.
Phone: (607) 257-1111

Melville
Emtec Sales, Inc.
Phone: (516) 752-1630

OREGON
Hillsboro
Western Technical Sales
Phone: (503) 640-4621

PENNSYLVANIA
Pittsburgh
Covert & Newman
Phone: (412) 531-2002

UTAH
Salt Lake City
Electrodyne
Phone: (801) 486-3801

WASHINGTON
Bellevue
Western Technical Sales
Phone: (206) 641-3900

Spokane
Western Technical Sales
Phone: (509) 922-7600

WISCONSIN
Waukesha
Micro-Tex, Inc.
Phone: (414) 542-5352

DISTRIBUTORS

ALABAMA
Huntsville
Hamilton/Avnet Electronics
Phone: (205) 837-7210
Pioneer Electronics
Phone: (205) 837-9300

ARIZONA
Phoenix
Hamilton/Avnet Electronics
Phone: (602) 231-5100
Wyle Distribution Group
Phone: (602) 249-2232

CALIFORNIA
Chatsworth
Anthem Electronics
Phone: (213) 700-1000
Arrow Electronics
Phone: (213) 701-7500

Costa Mesa
Avnet Electronics
Phone: (714) 754-6111
Hamilton Electro Sales
Phone: (714) 641-4100

Culver City
Hamilton/Avnet Electronics
Phone: (213) 558-2121
Hamilton/Avnet Electronics Military
Phone: (213) 558-2901

El Segundo
Wyle Distribution Group
Phone: (213) 322-8100

Irvine
Schweber Electronics
Phone: (714) 556-3880
Wyle Distribution Group
Phone: (714) 863-9953

Newport Beach
Arrow Electronics
Phone: (714) 851-8961

Sacramento
Hamilton/Avnet Electronics
Phone: (916) 920-3150

San Diego
Anthem Electronics
Phone: (619) 453-4871
Arrow Electronics
Phone (619) 565-4800
Hamilton/Avnet Electronics
Phone: (619) 571-7510
Wyle Distribution Group
Phone: (619) 565-9171

San Jose
Anthem Electronics Inc.
Phone: (408) 946-8000

Santa Clara
Schweber Electronics
Phone: (408) 748-4700
Wyle Distribution Group
Phone: (408) 727-2500

Sunnyvale
Arrow Electronics
Phone: (408) 745-6600
Hamilton/Avnet Electronics
Phone: (408) 743-3366

Tustin
Anthem Electronics
Phone: (714) 730-8000

Woodland Hills
Avnet Electronics
Phone: (213) 883-0000

CANADA
Calgary, Alberta
Hamilton/Avnet Electronics
Phone: (403) 230-3586
Zentronics
Phone: (403) 272-1021

Downsview, Ontario
Cesco Electronics
Phone: (416) 661-0220

Mississauga, Ontario
Hamilton/Avnet Electronics
Phone: (416) 677-7432
Zentronics
Phone: (416) 451-9600

Montreal, Quebec
Cesco Electronics
Phone: (514) 735-5511
Zentronics
Phone: (514) 735-5361

Ottawa, Ontario
Cesco Electronics
Phone: (613) 226-6903
Hamilton/Avnet Electronics
Phone: (613) 226-1700
Zentronics
Phone: (613) 238-6411

Quebec City
Cesco Electronics
Phone: (418) 524-4641

Vancouver
Zentronics
Phone: (604) 688-2533

Ville St. Laurent, Quebec
Hamilton/Avnet Electronics
Phone: (514) 331-6443

Waterloo
Zentronics
Phone: (519) 884-5700

Winnipeg
Zentronics
Phone: (204) 775-8661

COLORADO
Aurora
Arrow Electronics
Phone (303) 696-1111

Denver
Wyle Distribution Group
Phone: (303) 457-9953

Englewood
Hamilton/Avnet Electronics
Phone: (303) 740-1000

CONNECTICUT
Danbury
Hamilton/Avnet Electronics
Phone: (203) 797-2800
Schweber Electronics
Phone: (203) 792-3500

Wallingford
Arrow Electronics
Phone: (203) 265-7741

FLORIDA
Ft. Lauderdale
Arrow Electronics
Phone: (305) 776-7790
Hamilton/Avnet Electronics
Phone: (305) 971-2900

Hollywood
Schweber Electronics
Phone: (305) 927-0511

Palm Bay
Arrow Electronics
Phone: (305) 725-1480

St. Petersburg
Hamilton/Avnet Electronics
Phone: (813) 576-3930

GEORGIA
Atlanta
Schweber Electronics
Phone: (404) 449-9170

Norcross
Arrow Electronics
Phone: (404) 449-8252
Hamilton/Avnet Electronics
Phone: (404) 447-7500
Schweber Electronics
Phone: (404) 449-9170

ILLINOIS
Chicago
Bell Industries
Phone: (312) 982-9210

Elk Grove
Schweber Electronics
Phone: (312) 364-3750

Schaumburg
Arrow Electronics
Phone: (312) 397-3440

Bensenville
Hamilton/Avnet Electronics
Phone: (312) 860-7700

INDIANA
Indianapolis
Pioneer Electronics
Phone: (317) 849-7300
Arrow Electronics
Phone: (317) 243-9353
Hamilton/Avnet Electronics
Phone: (317) 844-9333

KANSAS
Overland Park
Hamilton/Avnet Electronics
Phone: (913) 888-8900

MARYLAND
Baltimore
Arrow Electronics
Phone: (301) 247-5200

Columbia
Hamilton/Avnet Electronics
Phone: (301) 995-3500

Gaithersburg
Pioneer Washington Electronics
Phone: (301) 948-0710
Schweber Electronics
Phone: (301) 840-5900

MASSACHUSETTS
Bedford
Schweber Electronics
Phone: (617) 275-5100

Burlington
Lionex Corp.
Phone: (617) 272-9400

Woburn
Arrow Electronics
Phone: (617) 933-8130
Hamilton/Avnet Electronics
Phone: (617) 273-7500

MICHIGAN
Ann Arbor
Arrow Electronics
Phone: (313) 971-8220

Grand Rapids
Hamilton/Avnet Electronics
Phone: (616) 243-8805

Livonia
Hamilton/Avnet Electronics
Phone: (313) 522-4700
Pioneer Electronics
Phone: (313) 525-1800
Schweber Electronics
Phone: (313) 525-8100

MINNESOTA
Eden Prairie
Schweber Electronics
Phone: (612) 941-5280

Edina
Arrow Electronics
Phone: (612) 830-1800

Minneapolis
Arrow Electronics
Phone: (612) 830-1800
Hamilton/Avnet Electronics
Phone: (612) 932-0600

Minnetonka
Hamilton/Avnet Electronics
Phone: (612) 932-0666

MISSOURI
Earth City
Hamilton/Avnet Electronics
Phone: (314) 344-1200

St. Louis
Arrow Electronics
Phone: (314) 567-6888

NEW HAMPSHIRE
Manchester
Arrow Electronics
Phone: (603) 668-6968

NEW JERSEY
Cherry Hill
Hamilton/Avnet Electronics
Phone: (609) 424-0100

Fairfield
Arrow Electronics
Phone: (201) 575-5300
Hamilton/Avnet Electronics
Phone: (201) 575-3390
Lionex Corporation
Phone: (201) 227-7960
Schweber Electronics
Phone: (201) 227-7880

Moorestown
Arrow Electronics
Phone: (609) 235-1900

NEW MEXICO
Albuquerque
Hamilton/Avnet Electronics
Phone: (505) 765-1500
Arrow Electronics
Phone: (505) 243-4566

NEW YORK
Buffalo
Summit Distributors
Phone: (716) 887-2800

East Syracuse
Arrow Electronics
Phone: (315) 652-1000
Hamilton/Avnet Electronics
Phone: (315) 437-2642

Hauppauge, L.I.
Arrow Electronics
Phone: (516) 231-1000
Lionex Corp.
Phone: (516) 273-1660

Liverpool
Arrow Electronics
Phone: (315) 652-1000

Melville
Hamilton/Avnet Electronics
Phone: (516) 454-6012

Rochester
Arrow Electronics
Phone: (716) 275-0300
Hamilton/Avnet Electronics
Phone: (716) 475-9130
Schweber Electronics
Phone: (716) 424-2222

Westbury, L.I.
Schweber Electronics
Phone: (516) 334-7474

NORTH CAROLINA
Charlotte
Pioneer Electronics
Phone: (704) 527-8188

Raleigh
Arrow Electronics
Phone: (919) 876-3132
Hamilton/Avnet Electronics
Phone: (919) 878-0819
Schweber Electronics
Phone: (919) 876-0000

Winston-Salem
Arrow Electronics
Phone: (919) 725-8711

OHIO
Beachwood
Schweber Electronics
Phone: (216) 464-2970

Cleveland
Hamilton/Avnet Electronics
Phone: (216) 831-3500
Pioneer Electronics
Phone: (216) 587-3600

Centerville
Arrow Electronics
Phone: (513) 435-5563

Dayton
Hamilton/Avnet Electronics
Phone: (513) 433-0610
Pioneer Standard Electronics
Phone: (513) 236-9900

Solon
Arrow Electronics
Phone: (216) 248-3990

OKLAHOMA
Tulsa
Quality Components
Phone: (918) 664-8812

OREGON
Hillsboro
Wyle Distribution Group
Phone: (503) 640-6000

Lake Oswego
Hamilton/Avnet Electronics
Phone: (503) 635-8831

PENNSLYVANIA
Horsham
Schweber Electronics
Phone: (215) 441-0600

Pittsburgh
Arrow Electronics
Phone: (412) 856-7000
Pioneer/Pittsburgh
Phone: (412) 782-2300

TEXAS
Austin
Arrow Electronics
Phone: (512) 835-4180
Hamilton/Avnet Electronics
Phone: (512) 837-8911
Quality Components
Phone: (512) 835-0220

Dallas
Arrow Electronics
Phone: (214) 386-7500
Hamilton/Avnet Electronics
Phone: (214) 659-4111
Quality Components
Phone: (214) 387-4949
Schweber Electronics
Phone: (214) 661-5010

Houston
Arrow Electronics
Phone: (713) 530-4700
Hamilton/Avnet Electronics
Phone: (713) 780-1771
Quality Components
Phone: (713) 772-7100
Schweber Electronics
Phone: (713) 784-3600

UTAH
Salt Lake City
Hamilton/Avnet Electronics
Phone: (801) 972-4300
Wyle Distribution Group
Phone: (801) 974-9953

WASHINGTON
Bellevue
Arrow Electronics
Phone: (206) 643-4800
Hamilton/Avnet Electronics
Phone: (206) 453-5844
Wyle Distribution Group
Phone: (206) 453-8300

WISCONSIN
New Berlin
Hamilton/Avnet Electronics
Phone: (414) 784-4510

Oak Creek
Arrow Electronics
Phone: (414) 764-6600

Waukesha
Bell Industries
Phone: (414) 784-0235

FOR SIGNETICS PRODUCTS WORLDWIDE:

ARGENTINA
Philips Argentina S.A.
Buenos Aires
Phone: 541-7141

AUSTRALIA
Philips Industries Holdings Ltd.
Lane-Cove, N.S.W.
Phone: 61-2-427-0888

AUSTRIA
Osterrichsche Philips Bauelemente
Wien
Phone: 43-222-93-26-2

BELGIUM
N. V. Philips & MBLE
Bruxelles
Phone: 32-02-242-7400

BRAZIL
Ibrape
Sao Paulo
Phone: 55-011-211-2600

CHILE
Philips Chilena S.A.
Santiago
Phone: 56-2-39-4001

COLOMBIA
Sadape S.A.
Bogota D.E.
Phone: 600 600

DENMARK
Miniwatt A/S
Kobenhavn N.V.
Phone: 45-01-69-1622

FINLAND
Oy Philips Ab
Helsinki
Phone: 358-1-7271

FRANCE
R.T.C. La Radiotechnique-Compelec
Paris
Phone: 33-1-355-4499

GERMANY
Valvo
Hamburg
Phone: 49-40-3296-19

GREECE
Philips S.A. Hellenique
Athens
Phone: 9215111

HONG KONG
Philips Hong Kong, Ltd.
Kwai Chung
Phone: 852-0-245121

INDIA
Philips India & Elect. Ltd.
Bombay
Phone: 91-22-295144

INDONESIA
P.T. Philips-Ralin Electronics
Jakarta
Phone: 716 131

IRELAND
Philips Electrical Ltd.
Dublin
Phone: 353-1-69-3355

ISRAEL
Rapac Electronics, Ltd.
Tel Aviv
Phone: 972-3-477115

ITALY
Philips S.p.A.
Milano
Phone: 39-2-6994

JAPAN
Signetics Japan, Ltd.
Tokyo
Phone: 813-230-1521
Osaka
Phone: 816-304-6171

KOREA
Philips Elect. Korea Ltd.
Seoul
Phone: 794-4202

MALAYSIA
Philips Malaysia Sdn. Berhad
Kuala Lumpur
Phone: 77 44 11

MEXICO
Electronica S.A. de C.V.
Mexico D.F.
Phone: 52-721-61300

NETHERLANDS
Philips Nederland B.V.
Eindhoven
Phone: 31-40-79-3333

NEW ZEALAND
Philips Electrical Ind. Ltd.
Auckland
Phone: 64-9-605914

NORWAY
Norsk A/S Philips
Oslo
Phone: 47-2-680200

PERU
Cadesa
Lima
Phone: 326070

PHILIPPINES
Philips Industrial Dev., Inc.
Makati-Rizal
Phone: 868951

PORTUGAL
Philips Portuguesa SARL
Lisboa
Phone: 351-19-68-3121

SINGAPORE
Philips Project Dev. Pte., Ltd.
Singapore
Phone: 65-253-8811

SOUTH AFRICA
E.D.A.C. (PTY), Ltd.
Johannesburg
Phone: 27-11-614-2362

SPAIN
Miniwatt S.A.
Barcelona
Phone: 301 63 12

SWEDEN
A.B. Elcoma
Stockholm
Phone: 46-08-67-9780

SWITZERLAND
Philips A.G.
Zurich
Phone: 41-01-988-2211

TAIWAN
Philips Taiwan, Ltd.
Taipei
Phone: 886-2-563-1717

THAILAND
Philips Electrical Co. of Thailand Ltd.
Bangkok
Phone: 233-6330-9

TURKEY
Turk Philips
Ticaret A.S.
Istanbul
Phone: 43 59 10

UNITED KINGDOM
Mullard, Ltd.
London
Phone: 44-01-580-6633

UNITED STATES
Signetics International Corp.
Sunnyvale, California
Phone: (408) 739-7700

URUGUAY
Luzilectron S.A.
Montevideo
Phone: 91 43 21

VENEZUELA
Industrias Venezolanas Philips S.A.
Caracas
Phone: 58-2-36-0511

© IC MASTER 1984

Military Selection Guide

Static Random Access Memories (T_A = -55°C to +125°C)

Part Number	Organization	Access Time (ns)	Maximum Current (mA)		Power Supply (Volts)	Number of Pins	Package Type (Note 1)	Compatible EPROM/ PROM
			Operating	Standby				
SYM2114A-3	1024 x 4	150	70	--	+5	18	C, D	
SYM2114A-4	1024 x 4	200	70	--	+5	18	C, D	
SYM2114A-5	1024 x 4	250	70	--	+5	18	C, D	
SYM2148H-3	1024 x 4	55	150	30	+5	18	C, D, K	
SYM2148H	1024 x 4	70	150	30	+5	18	C, D, K	
SYM2148H-6	1024 x 4	85	150	30	+5	18	C, D, K	
SYM2149H-3	1024 x 4	55	150	--	+5	18	C, D, K	
SYM2149H	1024 x 4	70	150	--	+5	18	C, D, K	
SYM2149H-6	1024 x 4	85	150	--	+5	18	C, D, K	
SYM2147H-2	4096 x 1	45	180	35	+5	18	C, D, K	
SYM2147H-3	4096 x 1	55	160	30	+5	18	C, D, K	
SYM2147H	4096 x 1	70	160	30	+5	18	C, D, K	
SYM2128-3	2048 x 8	150	100	30	+5	24	C, D, K	
SYM2128-4	2048 x 8	200	100	30	+5	24	C, D, K	
SYM2129-3	2048 x 8	150	100	--	+5	24	C, D, K	
SYM2129-4	2048 x 8	200	100	--	+5	24	C, D, K	
SYM2168[2]	4096 x 4	70	120	30	+5	20	C, D, K	
SYM2169[2]	4096 x 4	70	120	—	+5	20	C, D, K	
SYM2167[2]	16,384 x 1	70	120	30	+5	20	C, D, K	

Read Only Memories (ROMs) (T_A = -55°C to +125°C)

SYM3316	2048 x 8	100	150	--	+5	24	C, D	82S191
SYM3316A	2048 x 8	100	150	30	+5	24	C, D	82S191
SYM2332	4096 x 8	450	100	--	+5	24	C, D	TMS2532
SYM2333	4096 x 8	450	100	--	+5	24	C, D	2732/A
SYM2364	8192 x 8	450	100	--	+5	24	C, D	TMS2564
SYM2364-3	8192 x 8	300	100	--	+5	24	C, D	TMS2564
SYM2364A	8192 x 8	450	100	12	+5	24	C, D	TMS2564
SYM2364A-3	8192 x 8	300	100	12	+5	24	C, D	TMS2564
SYM2365	8192 x 8	450	100	--	+5	28	C, D, K	2764
SYM2365-3	8192 x 8	300	100	--	+5	28	C, D, K	2764
SYM2365A	8192 x 8	450	100	12	+5	28	C, D, K	2764
SYM2365A-3	8192 x 8	300	100	12	+5	28	C, D, K	2764
SYM23128	16,384 x 8	450	100	--	+5	28	C, D, K	27128
SYM23128-3	16,384 x 8	300	100	--	+5	28	C, D, K	27128
SYM23128A	16,384 x 8	450	100	10	+5	28	C, D, K	27128
SYM23128A-3	16,384 x 8	300	100	10	+5	28	C, D, K	27128
SYM23256	32,768 x 8	450	100	--	+5	28	C, D, K	27256
SYM23256-3	32,768 x 8	300	100	--	+5	28	C, D, K	27256
SYM23256A	32,768 x 8	450	100	10	+5	28	C, D, K	27256
SYM23256A-3	32,768 x 8	300	100	10	+5	28	C, D, K	27256

Notes:

1. C = Ceramic, D = Cerdip, P = Plastic, K = Leadless Chip Carrier, F = Flatpak.
2. Preliminary (new product).

© IC MASTER 1984

TEXAS INSTRUMENTS MILITARY PRODUCTS

CONTENTS PAGE

Processing Flow Features 537
Packages Available 537
Chip Carrier Process/Package Options 538
Logic Array Products 538
Bipolar Microprocessor Products 539
Digital Logic Products 540
Linear Products 541
Bipolar Memory Products 542
MOS Memory Products 543
Systems Products 544
Power Transistors-Radiation Tolerant 544
JM38510 Cross Reference 545
Military I/C Cross Reference Guide 546

Overview

Texas Instruments Military program offers high reliability integrated circuits covering a complete product spectrum. The program is designed to meet and support Military processing requirements. Processing to JM-38510 (JANB) and MIL-Standard-883 Class B assures the user of quality products and reliable performance.

Devices are available in ceramic dual-in-line, flatpack and chip carrier packaging alternatives to allow for maximum flexibility in system use.

PRODUCT LINE	PROCESSING FLOWS	TYPES	NUMBER OF UNIQUE TYPES AVAILABLE
LOGIC	SN,SNJ,JANB	54TTL 54H 54S 54L 54LS 54ALS 54AS 54HC	154 11 67 26 183 50 4 35
LINEAR	SN,SNJ,/883B JANB	INTERFACE, CONTROL	142
MOS MEMORY	TMS,SMJ	EPROM,DRAM,SRAM	10
BIPOLAR MEMORY	JBP, SNJ	PROM,RAM,SUPPORT	20
MICROPROCESSOR	N	9989	1
LOGIC ARRAY		STL,I2L	5

TEXAS INSTRUMENTS
POST OFFICE BOX 225012 • DALLAS, TEXAS 75265

© IC MASTER 1984

Processing Flow Features

PROCESSING FLOW FEATURES	JANB	SNJ	JBP	SMJ
• QUALIFIED PER MIL-M-38510 CLASS B	X			
• PRODUCED IN DESC-CERTIFIED DOMESTIC PRODUCTION FACILITY	X			
• TESTED PER MIL-STD-883B METHOD 5004 CLASS B	X	X	X	X
• ELECTRICAL CHARACTERISTICS PER APPROPRIATE SLASH SHEETS	X			
• ELECTRICAL AND MECHANICAL CHARACTERISTICS PER TI DATA SHEETS		X	X	X
• 100% FUNCTIONAL TEST AT TEMPERATURE EXTREMES		X	X	X
• 100% AC TESTING OF SWITCHING CHARACTERISTICS AS SPECIFIED IN TI DATA SHEETS		X	X	X
• TESTED PER MIL-STD-883B, METHOD 5005 CLASS B, GROUPS A,B,C,D EXCEPT AS NOTED IN APPROPRIATE SCREENING AND LOT CONFORMANCE TABLE (NOTE 1)	X	X	X	X
• TIGHTENED GROUP A LTPD		X	X	X
• GROUP A TESTED BY INSPECTION LOT	X	X	X	X
• EACH SHIPMENT INCLUDES A CERTIFICATE OF COMPLIANCE AND GROUP A SUMMARY REPORT		X	X	X
• GROUP B,C, AND D GENERIC DATA AVAILABLE PER TI BROCHURE CB159		X	X	X
• TESTED AND MARKED PER APPROPRIATE DESC MINISPEC WHEN TI IS LISTED AS APPROVED SOURCE		X		X

NOTE: FOR DETAILED SCREENING AND LOT CONFORMANCE INFORMATION REFER TO MILITARY PRODUCTS BROCHURE SCG714.

Packages Available

PACKAGE DESCRIPTION	PACKAGE TYPE	MILITARY PRODUCTS					
		LOGIC	LINEAR	BIPOLAR MEMORY	MOS MEMORY	LOGIC ARRAY	MICRO PROCESSOR
CERAMIC DIP	J JG	X	X X	X	X		
SIDE BRAZE CERAMIC DIP	JD				X		X
CERAMIC FLAT PACK	W WC	X	X X				
CERAMIC FLAT PACK	U		X				
SQUARE TOTAL CERAMIC CHIP CARRIER	FH	X	X	X			
THREE LAYER SQUARE CERAMIC CHIP CARRIER	FK	X	X	X		X(FD)	X(FD)
MEMORY RECTANGULAR CERAMIC CHIP CARRIER PACKAGE	FE			X	X		
MEMORY RECTANGULAR CERAMIC CHIP CARRIER PACKAGE	FG			X	X		
PIN GRID ARRAY						X	

© IC MASTER 1984

Chip Carrier Process/Package Options

PRODUCT LINE	PROCESSING FLOWS						PACKAGE TYPES				
	SN	SNJ	/883B	SMJ	JBP	N	FH	FK	FE	FG	FD
LOGIC (54LS,54S,54ALS, 54AS)	X	X					X	X			
LINEAR	X	X	X				X	X			
MOS MEMORY				X					X	X	
BIPOLAR MEMORY					X		X	X	X	X	
MICROPROCESSOR						X					X
LOGIC ARRAY											X

Logic Array Products

PRODUCT SPECTRUM

DEVICE TYPE	GATE TECHNOLOGY	MINIMUM PROCESSING GEOMETRY (MICRONS)	USEABLE GATE COUNT	INTERNAL GATE PROPAGATION DELAY (ns)	INTERNAL GATE POWER DISSIPATION (mW)	I/O SIGNAL PADS	AUTO ROUTE	T_J RANGE	RAD. TOLERANT
TAT004	STL	4.5	400	2.5	600	76	Yes	-55 to 150C	Yes
TAT008	STL	4.5	800	2.5	600	104	Yes	-55 to 150C	Yes
STL700	STL	4.5	560	3.0	300	61	Yes	-55 to 150C	Yes
SBP96600	I^2L	4.5	2120	15.0	100	140	No	-55 to 150C	Yes
SBP96700	I^2L	4.5	1120	15.0	100	96	No	-55 to 150C	Yes

*Future product

PACKAGE OPTIONS **

DEVICE TYPE	40 PIN DIP	64 PIN FLATPACK	LCCC		PIN GRID ARRAY		
			68 PAD	84 PAD	84 PIN	108 PIN	132 PIN
TAT004	X	X	X				
TAT008	X	X	X				
STL700	X	X	X				
SBP96600	X		X	X		X	X
SBP96700	X		X	X		X	X

** Dependent on custom circuit design I/O

© IC MASTER 1984

Bipolar Microprocessor Products

SBP 9989 Bipolar Microprocessor Family

The SBP9900 family features memory-to-memory architecture and Bipolar I²L technology enabling it to operate over the full military temperature range. The SBP9989 is a second generation 16-bit microprocessor offering three times the performance of its predecessor, the SBP9900A. The SBP9989 fully supports interrupt intensive applications, including high level languages and multitasking, with designed-in multi-processor support. Downward compatibility is maintained such that all SBP9900 software executes on the SBP9989 without change.

SBP 9989 Product Features

- 4.4-MHz clock rate, single phase, 50% duty cycle
- Designed-in support for advanced multiprocessor system architecture
- 16 bit data and address bus
- Serial I/O via Communications Register Unit (CRU)
- 16 prioritized hardware interrupts /16 software interrupts
- 9900 Family instruction set including signed multiply (MPY) and signed divide (DIV).
- Direct access to 128K bytes of memory (via new output pin MPEN)
- Operation over full MIL-TEMP range (-55°C to 125°C)
- Radiation tolerance characteristics of I²L Technology

Peripheral Support Functions

DEVICE TYPE	DESCRIPTION
SBP9901	Programmable Systems Interface
SBP9965	Peripheral Interface Adaptor
SBP9966	Interrupt Controller

Microprocessor/Peripheral Nomenclature

EXAMPLE: SBP 9989 N J

1. PREFIX
   Must contain three or four letters
   SBP —
   JAN B — JM38510/JANB Qualified
2. CIRCUIT DESIGNATOR
   Must contain four digits
   9989 — advanced 4.4 MHz 16 bit processor
3. TEMPERATURE RANGE —
   Must contain one letter only (omit for JANB part)
   N — -55°C to 125°C
4. PACKAGE TYPE
   Must contain one or two letters — J,FD

© IC MASTER 1984

Digital Logic Products

ADVANCED LOGIC FAMILIES

	ADVANCED LOW POWER SHOTTKY 54ALS	ADVANCED SCHOTTKY 54AS	HIGH SPEED CMOS 54HC
POWER DISSIPATION PER GATE (mW) STATIC 100KHZ	1.2 1.2	8 8	0.0000025 0.17
TYPICAL PROP DELAY (ns)	4	1.7	8
SPEED POWER PRODUCT (pJ)	4.8	13.6	1.4
MAX CLOCK FREQ (MHZ)	80	160	40
PRODUCT FEATURES	• TWICE THE SPEED OF LS • 60 PER CENT POWER CONSUMPTION OF LS • IMPROVED NOISE MARGIN OVER LS • HIGH COMPLEXITY FUNCTIONS REDUCE PACKAGE COUNT • DC & AC PARAMETERS GUARANTEED OVER TEMP • ESD PROTECTION	• 75 PER CENT SPEED IMPROVEMENT OVER SCHOTTKY • 40 PER CENT POWER CONSUMPTION OF SCHOTTKY • HIGH COMPLEXITY FUNCTIONS • DC & AC PARAMETERS GUARANTEED OVER TEMP • ESD PROTECTION	• LOW QUIESCENT POWER • HIGH NOISE IMMUNITY • LS SWITCHING SPEED • 2 — 6V POWER SUPPLY • SUPERIOR ESD PROTECTION • SUPERIOR LATCHUP PROTECTION • BROAD PRODUCT OFFERING

DIGITAL LOGIC NOMENCLATURE

EXAMPLE: SNJ 54LS00 FH

1. Prefix

   Must contain three or four letters
   SNJ — MIL-STD-883B, JEDEC Standard 101
   JANB — JM38510/JANB Qualified, Note 1

2. Circuit Designator

   Must contain four to eight digits
   54 — Standard TTL Circuits
   54H — High-speed TTL
   54L — Low-power TTL
   54LS — Low-power Schottky TTL
   54S — Schottky TTL
   54ALS — Advanced Low-power Schottky TTL
   54AS — Advanced Schottky
   54HC — High Speed CMOS

3. Package Type

   Must contain one or two letters

© IC MASTER 1984

LINEAR FEATURED PRODUCTS

LinCMOS™ OP AMPS	LinCMOS™ COMPARATORS	LinCMOS™ TIMERS	LinCMOS™ A/D PERIPHERALS
TLC271M SERIES TLC272M SERIES TLC274M SERIES	TLC372M TLC374M	TLC555M TLC556M	TLC532AM/533AM TLC540M/541
FEATURES STABLE INPUT THRESHOLD LOW POWER CONSUMPTION GOOD AC CHARACTERISTICS SINGLE SUPPLY OPERATION INDUSTRY STD. PIN-OUT CHOICE OF POWER/PERFORMANCE SINGLES-DUALS-QUADS	FEATURES LOW SUPPLY CURRENT DRAIN GOOD RESPONSE TIME EXCELLENT INPUT CHARACTERISTICS SINGLE SUPPLY OPERATION INDUSTRY STD. PIN-OUT DUALS OR QUADS	FEATURES HIGH SPEED LOW POWER CONSUMPTION GOOD LATCH-UP IMMUNITY LOW RESET CURRENTS INDUSTRY STD. PIN-OUT SINGLES & DUALS	FEATURES 8 BIT A/D SWITCHED CAPACITOR TYPE LOW POWER CONSUMPTION OTHER PERIPHERALS COMPLEMENTARY I/O CHOICE OF SPEED/POWER

DISPLAY DRIVERS	LINE CIRCUITS	VOLTAGE REGULATORS
SN55500B/501D AC PLASMA DRIVERS BIDFET TECHNOLOGY HIGH VOLTAGE DMOS OUTPUT 32 CHANNEL DRIVE CAPABILITY OTHER FLAT PANEL DISPLAY DRIVERS AVAILABLE	RS232C INTERFACE RS422 INTERFACE RS423 INTERFACE RS485 INTERFACE DRIVERS, RECEIVERS TRANSCEIVERS	TL593M TL594M TL1525A/1527A IMPROVED FIXED FREQUENCY, PULSE WIDTH MODULATORS

LINEAR NOMENCLATURE

EXAMPLE: JANB 55108 J /883B

1. Prefix

   Must contain three or four letters
   TL — TI Linear Control Products
   TLC — LinCMOS™ Control Products
   SNJ — MIL-STD-883B, JEDEC Standard 101
   JANB — JM38510/JANB Qualified, Note 1

2. Circuit Designator

   including temperature range
   Must contain three to seven characters
   (from individual data sheets)
   examples: 022M, 55450B, 78M05M

3. Package Type

   Must contain one or two letters
   (From pin connection diagram on individual data sheets)

4. Screening and Lot Conformance

   /883B — MIL-STD-883B Method 5004 Class B
   (Not used with part numbers having a JANB or an SN Prefix)

Note 1. Where devices are qualified under Military Specification MIL-M-38510

© IC MASTER 1984

Bipolar Memory Products

PROMs

DEVICE	TEMP.	SPEED (ns) MAX $t_{a(A)}$*	ORGANIZATION	PACKAGE TYPE	
				C-DIP	CHIP CARRIER
18S030	E,M	50	32 × 8	16 Pin (J)	20 Pad (FC,FD)
18SA030		50	32 × 8	16 Pin (J)	20 Pad (FC,FD)
24S10		75	256 × 4	16 Pin (J)	20 Pad (FH,FK)
24SA10		75	256 × 4	16 Pin (J)	20 Pad (FH,FK)
28L22		75	256 × 8	20 Pin (J)	20 Pad (FH,FK)
24S41		75	1K × 4	18 Pin (J)	28 Pad (FG)
28S42		70	512 × 8	20 Pin (J)	28 Pad (FC,FD)
28L42		110	512 × 8	20 Pin (J)	28 Pad (FC,FD)
28S46		70	512 × 8	24 Pin (J)	28 Pad (FC,FD)
24S81		85	2K × 4	18 Pin (J)	28 Pad (FG)
28S86A		80	1K × 8	24 Pin (J)	32 Pad (FG)
28L86A	E,M	175	1K × 8	24 Pin (J)	32 Pad (FG)

*$t_{a(A)}$ Access time from address

BIPOLAR MEMORY NOMENCLATURE

Example: JBP 2 8 S 8 6 M J

These two digits comprise the series designation

Prefix

JBP — MIL-STD-883B
JEDEC standard 101

JANB — JM 38510/JANB
Qualified, Note 1

Generic Programming Family

1—Single level
2—Double level
3—Oxide Isolated
4—Other

Output Word Width

4 or 8

Output Type

S = standard three-state
L = low-power three-state
P = power-down three-state
R = registered three-state
D = power-down and registered three-state
T = latched three-state
SA = standard open-collector
LA = low-power open-collector
PA = power-down open-collector
RA = registered open-collector
DA = power-down and registered open-collector
TA = latched open-collector

Bit Complexity

03 = 256 bits
1 = 1,024 bits
2 = 2,048 bits
4 = 4,096 bits
8 = 8,192 bits
16 = 16,384 bits
32 = 32,768 bits

Package Size*

No. of Pins	Row spacing in inches (millimeters) 0.300 (7,62)	0.400 (10,16)	0.600 (15,24)
16	0	-	-
18	1	-	-
20	2	-	-
22	3	4	-
24	5	-	6
28	-	-	7
40	-	-	8

* Package size designation is not applicable with chip carrier, and should be replaced with the letter X for this package type.

Temperature Range

No designator 0°C to 70°C
E — 40°C to 85°C
M — 55°C to 125°C

Package Type

J = ceramic dual-in-line
FH/FK/FE/FG = ceramic chip carrier

Note 1. Where devices are qualified under Military specification MIL-M-38510

© IC MASTER 1984

MOS Memory Products

RAMs

DEVICE	TEMP.	MAX. ACCESS TIME (ns)	ORGANIZATION	PACKAGE TYPE	
				C-DIP	CHIP CARRIER
SRAM					
5517	M,S,E,L	150,200	2K × 8	24 Pin (JD)	32 Pad (FG)
DRAM					
4164	M,S,E,L	150,200,250	64K × 1	16 Pin (JD)	28/18 Pad (FE/FG)

EPROMs

DEVICE	TEMP.	MAX. ACCESS TIME (ns)	ORGANIZATION	PACKAGE TYPE	
				C-DIP	CHIP CARRIER
2516	M,S,E,L	350,450	2K × 8	24 Pin (J)	32 Pad (FG)
2532	M,S,E,L	350,450	4K × 8	24 Pin (J)	32 Pad (FE)
25L32	M,S,E,L	450	4K × 8	24 Pin (J)	32 Pad (FE)
2564	M,S,E,L	450	8K × 8	28 Pin (J)	32 Pad (FE)
2708	M,S,E,L	350,450	1K × 8	24 Pin (J)	32 Pad (FE)
27L08	M,S,E,L	350,450	1K × 8	24 Pin (J)	32 Pad (FE)

MOS MEMORY NOMENCLATURE

EXAMPLE: SMJ 2564 -45 J M

1. Prefix
   Must contain three or four letters
   SMJ — MIL-STD-883B, JEDEC Standard 101
2. Circuit Designator
   Must contain four or five characters
   All standard types have four digits
   All low-power versions have five characters
   examples: Standard 32K EPROM — 2532
   Low-power 32K EPROM — 25L32
3. Access Time
   Device types are available with various speeds
4. Package Type
   Must contain one or two letters
5. Temperature Range
   Must contain one letter only
   M -55 to + 125°C
   S -55 to + 100°C
   E -40 to + 85°C
   L 0 to + 70°C

© IC MASTER 1984

Systems Products

DRAM Module Nomenclature

Multiple 4164's in chip carrier packages mounted on ceramic dual-in-line substrate.

EXAMPLE: SMJ 4 4 4164 –15 S

1. Prefix
Must contain three letters
SMJ — MIL-STD-883

2. Word Width
Must contain one digit only
1, 2, 4, 8

3. Devices Per Unit
Must contain one digit only
2, 4, 8

4. Temperature Range
Must contain one letter only
S — –55 to 100°C E — –40 to 85°C
L — 0 to 70°C

5. Access Time
Device types are available with various speeds

6. Circuit Designator
Must contain at least four digits

Power Transistors, Radiation Tolerant (metal case)

POLARITY	RATED I_C (A)	RATED V_{CEO} (V)	DEVICE NUMBER	RATED V_{CBO} (V)	RATED P_T (W)	h_{FE} MIN-MAX	@I_C (A)	f_T MIN (MHz)	PACKAGE	HARDNESS CLASS (See Note 1)
NPN	2	80	2N5000	100	20	70-200	1	60	TO59(I)	F
PNP	2	80	2N5001	100	20	70-200	1	60	TO59(I)	F
NPN	5	80	2N5004	100	33	70-200	2.5	70	TO59(I)	F
NPN	5	80	2N5005	100	33	70-200	2.5	70	TO59(I)	F
PNP	2	80	2N5149	100	4	70-200	1	60	TO5	F
NPN	2	80	2N5150	100	4	70-200	1	60	TO5	F
PNP	3	80	2N5153	100	6.7	70-200	2.5	70	TO5	F
NPN	3	80	2N5154	100	6.7	70-200	2.5	70	TO5	F
PNP	10	80	2N6127	100	67	30-120	5	50	TO61(I)	P
NPN	10	80	2N6128	100	67	30-120	5	50	TO61(I)	P
NPN	30	100	2N6273	120	150	40-200	5	75	TO63	P
NPN	18	90	SP10949	140	67	50-	7	180	TO61(I)	F-G
NPN	2.5	90	SP10950	140	5	50-	1.5	180	TO5	F-G
NPN	18	90	SP10951	140	33	50-	5	150	TO59(I)	F
NPN	25	80	SP10952	140	67	50-	7	150	TO61(I)	F-G
NPN	22	100	SP10953	150	67	50-	6	120	TO61(I)	F
NPN	20	80	SP10954	130	67	50-	8	120	TO61(I)	F
NPN	3	80	SP10955	130	4	50-	1.5	120	TO5	F
NPN	20	140	SP10956	170	100	50-	4	60	TO-61(I)	P-F
NPN	40	80	SP10957	100	200	30-	20	50	TO-63	F
NPN	3	70	SP10964	120	5	50-	1.5	250	TO5	G
NPN	15	80	SP10965	130	50	50-	8	250	TO61(I)	G
NPN	1	60	SP10958	100	3	50-	0.5	300	TO5	E
NPN	3	60	SP10959	100	5	50-	1.5	300	TO5	E
NPN	15	70	SP10960	110	50	50-	8	300	TO61(I)	E
PNP	1	60	SP10961	80	3	50-	0.5	300	TO5	E
PNP	3	60	SP10962	80	5	50-	1.5	300	TO5	E
PNP	15	70	SP10963	90	50	50-	8	300	TO-61(I)	E
NPN	5	70	SP10970	100	6.7	50-	8	120	TO-5	G
PNP	1	50	SP10971	80	0.75	50-	0.5	300	TO-18	E
NPN	1	50	SP10972	80	0.75	50-	0.5	300	TO-18	E

NOTE 1:

Test Parameter	Conditions
h_{FE} = 10 Min.	V_{CE} = 5V, $I_C = h_{FE}$ measurement current

Classes of Neutron Fluence (MCV equivalent)

P	F	G	E
n/cm²	n/cm²	n/cm²	n/cm²
1×10^{11}	1×10^{13}	7×10^{13}	3×10^{14}

© IC MASTER 1984

MILITARY PRODUCTS CROSS REFERENCE JM38510 SLASH SHEETS TO TI JANB PART NUMBER

JM38510/00101BCB	JANB5430J
JM38510/00102BCB	JANB5420J
JM38510/00103BCB	JANB5410J
JM38510/00104BCB	JANB5400J
JM38510/00105BCB	JANB5404J
JM38510/00106BCB	JANB5412J
JM38510/00107BCB	JANB5401J
JM38510/00108BCB	JANB5405J
JM38510/00109BCB	JANB5430J
JM38510/00201BCB	JANB5472J
JM38510/00202BCB	JANB5473J
JM38510/00203BCB	JANB54107J
JM38510/00204BEB	JANB5476J
JM38510/00205BCB	JANB5474J
JM38510/00206BCB	JANB5470J
JM38510/00301BCB	JANB5440J
JM38510/00302BCB	JANB5437J
JM38510/00303BCB	JANB5438J
JM38510/00401BCB	JANB5402J
JM38510/00402BEB	JANB5423J
JM38510/00403BCB	JANB5425J
JM38510/00404BCB	JANB5427J
JM38510/00501BCB	JANB5450J
JM38510/00502BCB	JANB5451J
JM38510/00503BCB	JANB5453J
JM38510/00504BCB	JANB5454J
JM38510/00602BEB	JANB5483J
JM38510/00701BCB	JANB5486J
JM38510/00801BCB	JANB5406J
JM38510/00802BCB	JANB5416J
JM38510/00803BCB	JANB5407J
JM38510/00804BCB	JANB5417J
JM38510/01306BEB	JANB54161J
JM38510/01701BEB	JANB54174J
JM38510/01702BEB	JANB54175J
JM38510/07001BCB	JANB54S00J
JM38510/07002BCB	JANB54S03J
JM38510/07003BCB	JANB54S04J
JM38510/07004BCB	JANB54S05J
JM38510/07005BCB	JANB54S10J
JM38510/07006BCB	JANB54S20J
JM38510/07007BCB	JANB54S22J
JM38510/07008BCB	JANB54S30J
JM38510/10401BCB	JANB55107J
JM38510/10402BCB	JANB55108J
JM38510/10403BEB	JANB55114J
JM38510/10404BEB	JANB55115J
JM38510/10405BEB	JANB55113J
JM38510/13001BEB	JANB55325BJ
JM38510/13002BEB	JANB55326AJ
JM38510/13003BEB	JANB55327AJ
JM38510/30001BCB	JANB54LS00J
JM38510/30002BCB	JANB54LS03J
JM38510/30003BCB	JANB54LS04J
JM38510/30004BCB	JANB54LS05J
JM38510/30005BCB	JANB54LS10J
JM38510/30006BCB	JANB54LS12J
JM38510/30007BCB	JANB54LS20J
JM38510/30008BCB	JANB54LS22J
JM38510/30009BCB	JANB54LS30J
JM38510/30101BCB	JANB54LS73AJ
JM38510/30102BCB	JANB54LS74AJ
JM38510/30103BEB	JANB54LS112AJ
JM38510/30104BCB	JANB54LS113AJ
JM38510/30105BCB	JANB54LS114AJ
JM38510/30106BEB	JANB54LS174J
JM38510/30107BEB	JANB54LS175J
JM38510/30108BCB	JANB54LS107AJ
JM38510/30109BEB	JANB54LS109AJ
JM38510/30110BEB	JANB54LS76AJ
JM38510/30201BCB	JANB54LS40J
JM38510/30202BCB	JANB54LS37J
JM38510/30203BCB	JANB54LS38J
JM38510/30301BCB	JANB54LS02J
JM38510/30302BCB	JANB54LS27J
JM38510/30303BCB	JANB54LS266J
JM38510/30401BCB	JANB54LS51J
JM38510/30402BCB	JANB54LS54J
JM38510/30501BCB	JANB54LS32J
JM38510/30502BCB	JANB54LS86J
JM38510/30601BEB	JANB54LS194AJ
JM38510/30602BEB	JANB54LS195AJ
JM38510/30603BCB	JANB54LS95BJ
JM38510/30604BEB	JANB54LS96J
JM38510/30605BCB	JANB54LS164J
JM38510/30606BCB	JANB54LS295BJ
JM38510/30607BEB	JANB54LS395AJ
JM38510/30608BEB	JANB54LS165AJ
JM38510/30609BEB	JANB54LS166AJ
JM38510/30701BEB	JANB54LS138J
JM38510/30702BEB	JANB54LS139J
JM38510/30703BEB	JANB54LS42J
JM38510/30704BEB	JANB54LS47J
JM38510/30901BEB	JANB54LS151J
JM38510/30902BEB	JANB54LS153J
JM38510/30903BEB	JANB54LS157J
JM38510/30904BEB	JANB54LS158J
JM38510/30905BEB	JANB54LS251J
JM38510/30906BEB	JANB54LS257AJ
JM38510/30907BEB	JANB54LS258AJ
JM38510/30908BEB	JANB54LS253J
JM38510/31001BCB	JANB54LS11J
JM38510/31002BCB	JANB54LS15J
JM38510/31003BCB	JANB54LS21J
JM38510/31004BCB	JANB54LS08J
JM38510/31101BEB	JANB54LS85J
JM38510/31201BEB	JANB54LS83AJ
JM38510/31202BEB	JANB54LS283J
JM38510/31301BCB	JANB54LS13J
JM38510/31302BCB	JANB54LS14J
JM38510/31303BCB	JANB54LS132J
JM38510/31401BEB	JANB54LS123J
JM38510/31402BEB	JANB54LS221J
JM38510/31403BCB	JANB54LS122J
JM38510/31501BCB	JANB54LS90J
JM38510/31502BCB	JANB54LS93J
JM38510/21503BEB	JANB54LS160AJ
JM38510/31504BEB	JANB54LS161AJ
JM38510/31507BEB	JANB54LS192J
JM38510/31508BEB	JANB54LS193J
JM38510/31509BCB	JANB54LS191J
JM38510/31510BCB	JANB54LS92J
JM38510/31511BEB	JANB54LS162AJ
JM38510/31512BEB	JANB54LS163AJ
JM38510/31513BEB	JANB54LS190J
JM38510/31601BEB	JANB54LS75J
JM38510/31602BEB	JANB54LS279J
JM38510/31603BEB	JANB54LS259J
JM38510/31604BEB	JANB54LS375J
JM38510/32003BCB	JANB54LS290J
JM38510/32004BCB	JANB54LS293J
JM38510/32102BCB	JANB54LS26J
JM38510/32201BEB	JANB54LS365AJ
JM38510/32202BEB	JANB54LS366AJ
JM38510/32203BEB	JANB54LS367AJ
JM38510/32204BEB	JANB54LS368AJ
JM38510/32301BCB	JANB54LS125AJ
JM38510/32302BCB	JANB54LS126AJ
JM38510/32401BRB	JANB54LS240J
JM38510/32402BRB	JANB54LS241J
JM38510/32403BRB	JANB54LS244J
JM38510/32501BRB	JANB54LS273J
JM38510/32502BRB	JANB54LS373J
JM38510/32503BRB	JANB54LS374J
JM38510/32504BRB	JANB54LS377J
JM38510/32601BEB	JANB54LS155J
JM38510/32602BEB	JANB54LS156J
JM38510/32701BEB	JANB54LS390J
JM38510/32702BCB	JANB54LS393J
JM38510/32703BEB	JANB54LS490J
JM38510/32801BCB	JANB54LS242J
JM38510/32802BCB	JANB54LS243J
JM38510/32803BRB	JANB54LS245J
JM38510/32901BCB	JANB54LS280J
JM38510/33106BEB	JANB25LS174J
JM38510/33107BEB	JANB25LS175J
JM38510/36001BEB	JANB54LS148J
JM38510/36002BEB	JANB54LS348J
JM38510/46501BYC	JANB9989J

© IC MASTER 1984

Military I/C Cross Reference Guide

Linear/Interface Examples:

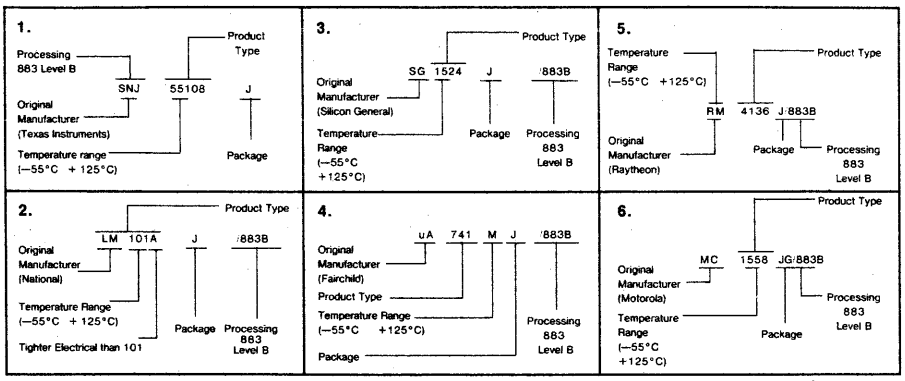

Logic

MANUFACTURER	PREFIX	DUAL-IN-LINE	FLAT PACK
T.I.	SNJ XXX	J	W
Motorola	54XX/BXBJC	L	F
National	DM XXXX	J/883B	W/883B
Signetics	S XXXX	F/883B	W/883B
Fairchild	XXXX	DMQB	FMQB
AMD	SN XXXX	DMB	FMB

MOS Memory

MANUFACTURER	PREFIX
T.I.	SMJ XXXX-XXJX
Mostek	MKB XXXX
Intel	M XXXX/B
Motorola	MCM XXXX BXBA
National	MM XXXX XX/883
AMD	XXXX DMB
Fairchild	XXXX DMQB

Bipolar PROM

ORG	TI	NATIONAL	SIGNETICS	INTEL	MMI	HARRIS	INTERSIL	AMD	FAIRCHILD	RAYTHEON	MOTOROLA
32 x 8	JBP18S030MJ JBP18SA030MJ	DM54S288J DM54S188J	S82S123F S82S23F		5331-1J 5330-1J	HM7603-8 HM7602-8	IM5610MJ IM5600MJ	27S19DMB 27S18DMB			
256 x 4	JBP24S10MJ JBP24SA10MJ	DM54S287J DM54S387J	S82S129F S82S126F	M3621 M3601	5301-1J 5300-1J	HM7611-8 HM7610-8	IM5623MJ IM5603MJ	27S21DMB 27S20DMB	93427DMQB 93417DMQB	29661DMB 29660DMB	
256 x 8	JBP28L22MJ	DM54S471J DM54S470J			5309-1J 5308-1J					29601DMB 29600DMB	
512 x 8	JBP28S42MJ	DM54S472J DM54S473J	S82S147F S82S146F		5349-1J 5348-1J	HM7649-8 HM7648-8		27S29DMB 27S28DMB		29621DMB 29620DMB	
512 x 8	JBP28S46MJ	DM54S474J DM54S475J	S82S141F S82S140F	M3624 M3604	5341-1J 5340-1J	HM7641-8 HM7640-8	IM5625MJ IM5605MJ	27S31DMB 27S30DMB	93448DMQB 93438DMQB	29625DMB 29624DMB	MCM7641 MCM7640
1024 x 4	JBP24S41MJ	DM54S573J DM54S572J	S82S137F S82S136F	M3625 M3605	5353-1J 5352-1J	HM7643-8 HM7642-8		27S33DMB 27S32DMB	93453DMQB 93452DMQB	29641DMB 29640DMB	MCM7643 MCM7642
1024 x 8	JBP28S86MJ	DM77S181J DM77S180J	S82S181F S82S180F	M3628 M3608	5381-1J 5380-1J	HM7681-8 HM7680-8		27S181DMB 27S180DMB	93451DMQB 93450DMQB	29631DMB 29630DMB	MCM7681 MCM7680
2048 x 4	JBP24S81AMJ	DM77S185J DM77S184J	S82S185F S82S184F			HM7685-8 HM7684-8		27S185DMB 27S184DMB		29651DMB 29650DMB	MCM7685 MCM7684
2048 x 8	JBP28S166AMJ	DM77S191J DM77S190J	S82S191F S82S190F	M3636		HM76161-8 HM76160-8		27S191DMB 27S190DMB	93511DMQB 93510DMQB	29681DMB 29680DMB	

Note: This is a functional cross-reference.
National, Signetics and MMI use "883B" suffix to indicate military processing to MIL-STD-883B.

© IC MASTER 1984

1K — Industrial / Military / Mil/883B — X2212I / X2212M / X2212MB — 256x4 Bit Nonvolatile Static Ram

5 Volt Programmable NOVRAM*

FEATURES

- 5V Programmable
- Power-Failure Protection
- Organized for Microcomputer Systems
- Mil 883 Level B Processing - X2212MB
- Military Standard Processing
- Fully Static Timing
- Fast RAM Cycle Time: 300ns
- Hardware Nonvolatile Control Architecture
- Low Power Consumption

DESCRIPTION

The Xicor X2212 nonvolatile static RAM combines 1K (256x4) bits of conventional static RAM with 1K-bits of Electrically Erasable PROM. Nonvolatile data can be stored in the E²PROM, while independent data can be accessed in the static RAM at the same time. Once stored in nonvolatile memory, data can be recalled an unlimited number of times. The X2212 requires only a single 5V supply for all modes of operation and is completely TTL compatible, with fully static timing and three-state outputs. The store signal causes a snapshot copy of the static RAM to be transferred to the E²PROM where it is stored safe even when power is removed. The inverse can be accomplished when power is restored and during normal operation.

FUNCTIONAL DIAGRAM X2212 (256x4)

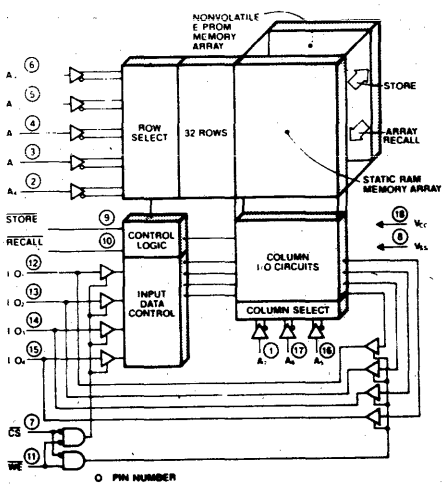

PIN CONFIGURATION
18 PIN DIP .300"

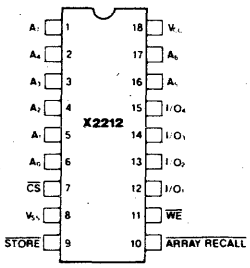

16K — Industrial / Military / Mil/883B — X2816AI / X2816AM / X2816AMB — 2Kx8 Bit Electrically Erasable PROM

5 Volt Programmable E²PROM

FEATURES

- Simple Byte Write Operation
  - No High Voltages Necessary
  - Single TTL Level $\overline{WE}$ Signal Modifies Data
  - Internally Latched Addresses and Data
  - Automatic Write Time-out
  - Noise Protected $\overline{WE}$ Pin
- Conforms to JEDEC Byte-Wide Standard
- Reliable N-Channel Floating Gate MOS Technology
- Single 5 Volt Supply
- Byte Write Time: 10ms Max.
- Fast Access Time: 350ns Max.
- Lower Power Dissipation
  - Active Current: 140mA Max.
  - Standby Current: 60mA Max.

FUNCTIONAL DIAGRAM

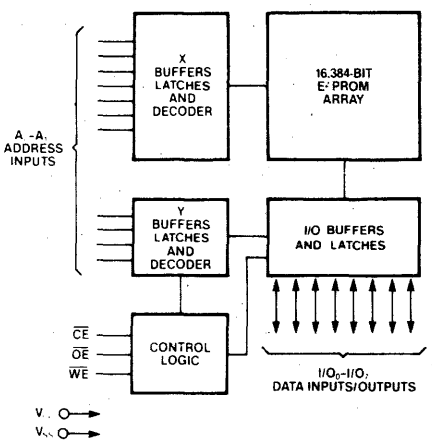

PIN CONFIGURATION

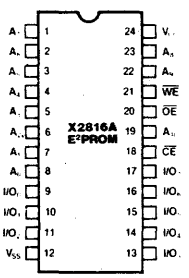

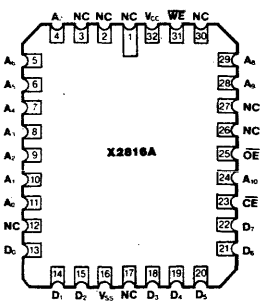

DESCRIPTION

The Xicor X2816A (16,384 bits) is an electrically erasable programmable read-only-memory (E²PROM) with unprecedented ease-of-use features. Xicor E²PROM data can be modified using simple TTL level signals and a *single 5 volt power supply*. In addition, Xicor E²PROMs are operationally and pin compatible with existing 2Kx8 byte-programmable E²PROMs which require an additional high voltage power supply for programming. (See optional high voltage programming compatible mode.) Writing data in Xicor E²PROMs is analogous to writing data in a static RAM. A 200ns TTL low level signal to the $\overline{WE}$ pin initiates a byte write operation which is automatically timed out in a maximum of 10ms. Since addresses and data are internally latched, Xicor E²PROMs free the system for other tasks during the 10ms period, such as programming other Xicor E²PROMs. In addition to byte modification capability, a 10ms total chip erase feature is provided.

Xicor E²PROMs use a 2-line control architecture, $\overline{CE}$ and $\overline{OE}$, to eliminate bus contention in a system environment.

The X2816A is fabricated with the same reliable N-Channel floating gate MOS technology used in Xicor's NOVRAMs.*

*NOVRAM is Xicor's nonvolatile static RAM device.

INTRODUCTION TO DIGITAL

The Master Selection Guide provides sufficient information for making initial product selections. The devices are listed by major family, CMOS, ECL, or TTL, and then into functional groups, arithmetic, buffers/inverters, etc.

The initial selection lists are followed by device data pages provided by the manufacturers. The initial selection listings indicate the pages on which additional device data may be found. Thus these pages also serve as an index to the data selections.

If you already have a device number and you wish to locate similar functions, the device can be located through the Part Number Index at the front of the volume (page 40), and then similar devices found on adjacent Master Selection Guide entries.

Some digital circuits—calculator, watch chips, and electronic organ circuits—not included in this section are covered in detail in the Linear-Consumer section. Digital circuits not included in one of the major logic families are listed in the heading Digital—Special.

This section is not complicated by reference to package styles; the package style suffixes are usually deleted. For more information on each companies' suffixes, see the Part Number Guide. Throughout the Master Selection Guide, each full military temperature range (−55°C to 125°C) device is indicated by a dagger (†) before the manufacturer's name. Manufacturers' names are normally spelled out; however, a few are abbreviated and the abbreviations are explained on page 502.

Page Number Index—Digital Devices

	CMOS	10K ECL	100K ECL	III ECL	HNIL/ HTL	TTL
Arithmetic Functions	571	596	599		601	603
Buffers	572	596	599		601	605
Inverters	573	596			601	606
Counters Binary	574	596	599	600	601	607
Decade	575	596			601	609
Miscellaneous	577					611
Decoders	578	596	599		601	612
Drivers	579	596	599		601	613
Flip-Flops D-Type	580	596	599	600	601	614
J-K	581	596			601	616
Gates AND	582	596			601	618
NAND	582				601	619
AND-OR	583					622
AND-OR-Invert	583		599		601	622
OR	584	596		600	601	623
NOR	584	597		600	601	623
OR/NOR	584	597	599	600		624
Exclusive OR/NOR	585	597	599	600		625
Miscellaneous	585				601	625
Latches	586	597	599	600	601	625
Memories	587	597	599			626
Multiplexers (Digital)	588	598	599		601	627
Multivibrators	589	598		600	601	630
Oscillators'/Dividers	589					
Shift Registers	590	598	599	600	601	631
Transceivers, Bus						633
Translators	592	598	599		601	636
Miscellaneous	592	598	599	600	601	636
Digital-Special						640

Detailed Product Information provided by:

Advanced Micro Devices 701
American Microsystems, Inc. 705
Analog Devices 706
Fairchild 708
Intersil Corporation 778
LSI Computer Systems 803
Monolithic Memories, Inc. 804
Motorola 820
Panasonic 826
RCA 836
Semi Processes, Inc. 844
Signetics 857
Texas Instruments 915
TRW LSI Products 1159
Western Digital 1172

The manufacturers listed above have provided detailed information on their latest and most significant products.

© IC MASTER 1984

EINFÜHRUNG DIGITAL-SCHALTUNGEN

Der Master Selection Guide für Digitalschaltungen enthält alle Informationen, die Sie für die Erstauswahl Ihres Produkts benötigen. Die Bauteile, die in diesem Abschnitt erscheinen, sowohl im Selection Guide als auch auf den Datenblättern, sind in allen Master Indexes enthalten.

Die ersten beiden Seiten des Digital-Teils beinhalten Leistungs-vergleiche der wichtigsten Digitalfamilien. Daran anschließend finden Sie ein Verzeichnis der Bauteile jeder Familie nach Funktionen (arithmetische Funktionen, Buffers/Inverters usw.). Diesen Listen folgen die Datenblätter der Hersteller. Der Master Selection Guide verweist jeweils auf das entsprechende Datenblatt.

Einige Digital-Schaltungen (Rechner, Uhren-Chips und elektronische Orgel-Schaltungen), die in diesem Teil nicht enthalten sind, werden ausführlich im Abschnitt Linear-Consumer behandelt. Digital-Schaltungen, die nicht in einer der größeren Logik-Familien enthalten sind, finden sich unter der Rubrik "Digital-Sonstige Bauteile" (Digital — Other Devices).

Dieser Abschnitt wird nicht durch Hinweise auf Gehäuseformen Kompliziert. Die entsprechenden Suffix wurden meistens weggelassen. Weitere Information über die Suffixe jedes Herstellers erhalten Sie über das Numerische Typenverzeichnis. Im ganzen Master Selection Guide sind alle Bauteile mit militärischem Temperaturebereich (—55° bis 125°C) durch ein Kreuz (†) vor dem Namen des Herstellers gekennzeichnet. Die Namen der Hersteller sind normalerweise ausgerschrieben; einige jedoch sind abgekurst. Die Abkürzungen werden auf S. 502 erklärt.

© IC MASTER 1984

INTRODUCTION AU SYSTEME DIGITAL

Le Guide Général de Sélection fournit suffisamment de renseignements pour permettre des selections initiales de produits. Tous les appareils énumérés dans cette Section, à la fois dans le Premier Guide de Sélection et le feuilles de données, apparaissent également dans tous les autres index.

Les deux premières pages de la Section "Digital" présentent des comparaisons de performance entre les principales familles de système digital. Suivent ensuite des listes d'appareils de chaque famille, classés par groupes fonctionnels (arithmétique, registres, invertisseurs, etc.). Les listes de première sélection sont suivies par des feuilles de données par appareil, fournies par les fabricants. Les références de numéros de pages de ces données sont communiquées dans les listes de première sélection.

Quelques circuits digitaux — calculatrices, circuits de montre, et circuits électroniques primaires — no signalés dans cette Section, sont étudiés en detail dans la Section "Linéaire". Les circuits digitaux non inclus dans l'une des familles princiaples de Legique, sont énumérés dans la rubrique "Autres Systemes Digitaux" (Digital-Other Devices).

Cette Section ne fait pas apparaître les types de boitier. Les suffixes indiquant les types de boitier sont généralement omis. Pour obtenir des renseignements supplémentaires sur les suffixes utilsés par chaque société, veuillez vous reporter au Guide des Numéros de Pièces. Dans tout le Guide Général de Sélection chaque appareil possédant la variante complète de température imposée par l'Armée (−55°C à 125°C) est indiqué par le symbole (†) inscrit devant le nom du fabricant. Les noms des fabricants sont généralement écrits en entier, il arrive cependant que certains soient abrégés. Voir page 502 pour obtenir la signification de ces abréviations.

© IC MASTER 1984

INTRODUCCIÓN A DIGITAL

La Guía Maestra de Selección provee suficiente información para hacer selecciones iniciales de producto. Todas las componentes que aparecen en esta sección, ya sea en la guía de selección inicial o en las páginas de datos, están incluidas en todos los otros índices.

Las primeras dos páginas de la sección digital presenta comparación de funcionamiento entre las familias digitales mayores. Estas están sequidas por listas de las componentes correspondiente a cada familia y organizadas en grupos funcionales (aritmético, separadores, invertidores, etc). Las listas de selección inicial están sequidas por las páginas de datos, de las componentes proveídas por los fabricantes. Referencias del número de la página a estas páginas de datos están dadas con las listas de selección incial.

Algunos circuitos digitales — calculadoras, circuitos integrados de relojes, y circuitos de órganos eléctricos — no incluídas en esta sección son detalladas en la sección de Consumidor-Lineal. Los circuitos digitales no incluídos entre las familias lógicas mayores aparecen bajo el título Digital-Otras Componentes.

Esta sección no es complicada por referencias al estilo constructivo; los sufijos que denotan estilo constructivo han sido generalmente omitidos. Para información adicional sobre sufijos de las compañías, refiérase a la Guía de Número de Pieza. A lo largo de la Guía de Selección Maestra, cada intérvalo completo de temperatura para uso militar (—55° a 125°C) de la componente aparece indicada por el signo fabricantes no son generalmente deletreados; sin embargo, algunos aparecen abreviados y las abreviaturas son explicadas en la página 502 .

© IC MASTER 1984

ディジタルへの案内

マスターセレクションガイドは最初の製品選択には充分の資料を揃えています。本セレクション中のセレクションガイドとデータののっているページに記載されている全製品は他の全てのインデックスにも入っています。

ディジタルセレクションの最初の2ページには主要なディジタルファミリーの性能比較がのっています。次のページからはそのファミリーが機能グループ毎に分類されています（例えばアリスメティック，バッファ／インバータ…と云うように）。その次にのせてあるのは各メーカーのデータシートです。このデータシートを見つけるにはセレクションガイドにのっているページをめくって下さい。

カルキュレーター用，時計用チップ，電子オルガン用回路はこのセクションでなく，リニアーコンシューマーセクションに詳細に紹介されています。

このセクションではパッケージにはふれていません。パッケージ形状のサフィックスについての情報は"パーツナンバーガイド"を参照して下さい。
マスターセレクションガイドの全ページ，ミリタリー温度範囲（－55℃～－125℃）の製品は剣じるし（　）をメーカー名の前につけてあります。メーカー名は通常簡略化はしていません。簡略化されているものについては 502 ページにその説明があります。

© IC MASTER 1984

DIGITAL–CMOS

Arithmetic Functions

Function	Device	Source		Line
Adder, NBCD (natural binary coded decimal)				
	HD14560B	Hitachi		
	MC14560BA	† Motorola		
	MC14560BC	Motorola		
	TC4560B	Toshiba		
Adder, Triple Serial, Negative Logic, with Internal Carry				
	HD14038B	Hitachi		5
	MC14038BA	† Motorola		
	MC14038BC	Motorola		
	CD4038A	**† RCA**	**(840)**	
	CD4038AE	**RCA**	**(840)**	
	CD4038B	**† RCA**	**(840)**	10
	CD4038BE	**RCA**	**(840)**	
	HCC4038B	† SGS		
	HCF4038B	SGS		
	CM4038A	† Solitron		
	CM4038AE	Solitron		15
	TC4038B	Toshiba		
Adder, Triple Serial, Positive Logic, with Internal Carry				
	HD14032B	Hitachi		
	MC14032BA	† Motorola		
	MC14032BC	Motorola		
	CD4032A	**† RCA**	**(840)**	20
	CD4032AE	**RCA**	**(840)**	
	CD4032B	**† RCA**	**(840)**	
	CD4032BE	**RCA**	**(840)**	
	HCC4032B	† SGS		
	HCF4032B	SGS		25
	CM4032A	† Solitron		
	CM4032AE	Solitron		
	TC4032B	Toshiba		
Adder, 2-Bit Binary				
	SP54HC82	**† SPI**	**(848)**	
	SP74HC82	**SPI**	**(848)**	30
Adder, 4-Bit, Full				
	54HC283	† Fairchild		
	74HC283	Fairchild		
	F4008BC	Fairchild		
	F4008BM	† Fairchild		
	HD14008B	Hitachi		35
	MC14008BA	† Motorola		
	MC14008BC	Motorola		
	MC54HC283	† Motorola		
	MC74HC283	Motorola		
	CD4008BC	National		40
	CD4008BM	† National		
	MM54C83	† National		
	MM74C83	National		
	CD4008A	**† RCA**	**(840)**	
	CD4008AE	**RCA**	**(840)**	45
	CD4008B	**† RCA**	**(840)**	
	CD4008BE	**RCA**	**(840)**	
	SP74HC83	SPI		
	HCC4008B	† SGS		
	HCF4008B	SGS		50
	HEF4008B	**Signetics**	**(864,898)**	
	883/4008B	† SSS		
	SCL4008B	SSS		
	CM4008A	† Solitron		
	CM4008AE	Solitron		55
	TC4008B	Toshiba		
Data Access Register (for memory address arithmetic)				
	F4707BC	Fairchild		
	F4707BM	† Fairchild		
Data Path Switch				
	F4704BC	Fairchild		
	F4704BM	† Fairchild		60

Function	Device	Source		Line
Equality Comparator, 8-Bit				
	54HC688	† Fairchild		
	74HC688	Fairchild		
	MC54HCT688	† Motorola		
	MC74HCT688	Motorola		
	CD54HC688	**† RCA**	**(843)**	65
	CD54HCT688	† RCA		
	CD74HC688	**RCA**	**(843)**	
	CD74HCT688	RCA		
	74HC688	**† Signetics**	**(908)**	
	74HCT688	**† Signetics**	**(908)**	70
	TC74HC688	Toshiba		
Full Adder, Gated				
	SP54HC80	**† SPI**	**(848)**	
	SP74HC80	**SPI**	**(848)**	
Logic Register Stack				
	F4705BC	Fairchild		
	F4705BM	† Fairchild		75
Logic Unit 4-Bit				
	HD14581B	Hitachi		
	MC14581BA	† Motorola		
	MC14581BC	Motorola		
	MC54HC181	† Motorola		
	MC74HC181	Motorola		80
	CD40181B	**† RCA**	**(840)**	
	CD40181BE	**RCA**	**(840)**	
	CD4057A	**† RCA**	**(840)**	
	HCC40181B	† SGS		
	HCF40181B	SGS		85
	883/4581B	† SSS		
	SCL4581B	SSS		
Look-Ahead Carry Block				
	F4582BC	Fairchild		
	F4582BM	† Fairchild		
	HD14582B	Hitachi		90
	MC14582BA	† Motorola		
	MC14582BC	Motorola		
	MC54HC182	† Motorola		
	MC74HC182	Motorola		
	CD40182B	**† RCA**	**(840)**	95
	CD40182BE	**RCA**	**(840)**	
	SP74HC182	SPI		
	HCC40182	† SGS		
	HCF40182	SGS		
	883/4582B	† SSS		100
	SCL4582B	SSS		
Magnitude Comparator 4-Bit				
	54HC85	† Fairchild		
	74HC85	Fairchild		
	F40085BC	Fairchild		
	F40085BM	† Fairchild		105
	HD14585B	Hitachi		
	MC14585BA	† Motorola		
	MC14585BC	Motorola		
	MC54HC85	† Motorola		
	MC74HC85	Motorola		110
	MM54C85	† National		
	MM54HC85	† National		
	MM74C85	National		
	MM74HC85	National		
	MN4585B	† Panasonic		115
	MN74HC85	**Panasonic**	**(830)**	
	CD4063B	**† RCA**	**(840)**	
	CD4063BE	**RCA**	**(840)**	
	CD4585B	**† RCA**	**(840)**	
	CD4585BE	**RCA**	**(840)**	120
	CD54HC85	**† RCA**	**(842)**	
	CD54HCT85	† RCA		
	CD74HC85	RCA		
	CD74HCT85	**RCA**	**(842)**	
	SP74HC85	SPI		125
	HCC4063B	† SGS		
	HCF4063B	SGS		
			(Continued)	

Function	Device	Source		Line
Magnitude Comparator 4-Bit			(Cont'd)	
	74HC85	**Signetics**	**(907)**	
	74HCT85	**Signetics**	**(907)**	
	HEF4585B	**Signetics**	**(865,899)**	130
	HEF4585BD	**† Signetics**	**(865)**	
	883/4585B	† SSS		
	SCL4585B	SSS		
	SN54HC85	† TI		
	SN74HC85	TI		135
	TC4063B	Toshiba		
	TC4585B	Toshiba		
	TC74HC85	Toshiba		
Magnitude Comparator 8-Bit				
	54HC688	† Fairchild		
	74HC688	Fairchild		140
	MC54HC688	† Motorola		
	MC74HC688	Motorola		
	SN54HC688	† TI		
	SN74HC688	TI		
Multiplier, Serial, 8-Bit				
	CD54HC384	**† RCA**	**(843)**	145
	CD54HCT384	† RCA		
	CD74HC384	**RCA**	**(843)**	
	CD74HCT384	RCA		
	74HC384	**Signetics**	**(908)**	
	74HCT384	**Signetics**	**(908)**	150
Multiplier, 2's Complement (16x16). Allows unsigned magnitude inputs as well (NMOS)				
	WTL1016	Weitek		
Multiplier, 2x2-Bit, Parallel				
	MC14554BA	† Motorola		
	MC14554BC	Motorola		
Multiplier (8x8)	**ADSP-1080J**	**AD**	**(706)**	
	ADSP-1080K	**AD**	**(706)**	155
	ADSP-1080S	**† AD**	**(706)**	
	ADSP-1080T	**† AD**	**(706)**	
Multiplier (12x12)				
	TMC2009	**TRW-LSI**	**(1169)**	
Multiplier (16x16)				
	ADSP-1016J	AD		
	ADSP-1016K	AD		160
	ADSP-1016S	† AD		
	ADSP-1016T	† AD		
	IDT7216	**IDT**	**(4012)**	
	IDT7217	**IDT**	**(4012)**	
	SY660C16	**Synertek**	**(1696)**	165
	TMC216H	**TRW-LSI**	**(1167)**	
Multiplier-Accumulator (8x8)				
	ADSP-1008J	**AD**	**(707)**	
	ADSP-1008K	**AD**	**(707)**	
	ADSP-1008S	**† AD**	**(707)**	
	ADSP-1008T	**† AD**	**(707)**	170
	TMC2008	**TRW-LSI**	**(1168)**	
Multiplier-Accumulator (16x16)				
	ADSP-1010J	**AD**	**(707)**	
	ADSP-1010K	**AD**	**(707)**	
	ADSP-1010S	**† AD**	**(707)**	
	ADSP-1010T	**† AD**	**(707)**	175
	ADSP-1110K	**AD**	**(707)**	
	ADSP-1110T	**† AD**	**(707)**	
	TMC2010	**TRW-LSI**	**(1170)**	
Parity Generator/Checker, 9-Bit Odd/Even				
	54HC280	† Fairchild		
	74HC280	Fairchild		180
	MC54HC280	† Motorola		
	MC74HC280	Motorola		
	MM54HC280	† National		
	MM74HC280	National		
	CD54HC280	**† RCA**	**(842)**	185
	CD54HCT280	† RCA		
	CD74HC280	RCA		
			(Continued)	

† Military Temperature Range (−55° to 125°C)

* Typical Value

Bold face indicates additional data is provided on the page noted.

DIGITAL–CMOS (Cont'd)

Function	Device	Source	Line
Arithmetic Functions (Cont'd)			
Parity Generator/Checker, 9-Bit Odd/Even			
			(Cont'd)
	CD74HCT280	**RCA**	**(842)**
	SP54HC280	**† SPI**	**(848)**
	SP74HC280	**SPI**	**(848)**
	74HC280	**Signetics**	**(907)**
	74HCT280	**Signetics**	**(907)**
Nines Complementer			
	HD14561B	Hitachi	
	MC14561BA	† Motorola	
	MC14561BC	Motorola	
	TC4561B	Toshiba	
8x8 Bit Multiplier, Unsigned Magnitude			
	ADSP-1081J	**AD**	**(706)**
	ADSP-1081K	**AD**	**(706)**
	ADSP-1081S	**† AD**	**(706)**
	ADSP-1081T	**† AD**	**(706)**
12x12 Bit Multiplier Accumulator			
	ADSP-1009J	**AD**	**(707)**
	ADSP-1009K	**AD**	**(707)**
	ADSP-1009S	**† AD**	**(707)**
	ADSP-1009T	**† AD**	**(707)**
12x12 Bit Multiplier, Two's Complement			
	ADSP-1012J	**AD**	**(706)**
	ADSP-1012K	**AD**	**(706)**
	ADSP-1012S	**† AD**	**(706)**
	ADSP-1012T	**† AD**	**(706)**
Buffers			
Quad Gated, Three-State			
	MC54HC125	† Motorola	
	MC54HC126	† Motorola	
	MC74HC125	Motorola	
	MC74HC126	Motorola	
Quad Low Impedance			
	883/4441UB	† SSS	
	SCL4441UB	SSS	
Quad True/Complement			
	F4041BC	Fairchild	
	F4041BM	† Fairchild	
	CD4041C	National	
	CD4041M	National	
	CD4041A	**† RCA**	**(837)**
	CD4041AE	**RCA**	**(837)**
	CD4041UB	**† RCA**	**(837)**
	CD4041UBE	**RCA**	**(837)**
	HCC4041UB	† SGS	
	HCF4041UB	SGS	
	HEF4041B	**Signetics**	**(864,898)**
	HEF4041BD	**† Signetics**	**(864)**
	883/4041UB	† SSS	
	SCL4041UB	SSS	
	CM4041A	† Solitron	
	CM4041AE	Solitron	
Quad Three-State (Inverted Control)			
	MM54HC126	† National	
	MM74HC126	National	
	SP74HC126	**SPI**	**(848)**
Quad Three-State Non-Inverting			
	TC5024	Toshiba	
	TC5025	Toshiba	
Quad Three-State			
	54HC125	† Fairchild	
	74HC125	Fairchild	
	MM54HC125	† National	
	MM74HC125	National	
	SP54HC125	**† SPI**	**(848)**
	SP74HC125	**SPI**	**(848)**
Hex CMOS Compatible			
	DS1630	† National	
	DS3630	National	
Hex High Voltage			
	TC5064B	Toshiba	
	TC5065B	Toshiba	
Hex (Inverting) Three-State, Strobed			
	HD14502B	Hitachi	
	MC14502BA	† Motorola	
	MC14502BC	Motorola	
	CD4502B	**† RCA**	**(837)**
	CD4502BE	**RCA**	**(837)**
	HCC4502B	† SGS	
	HCF4502B	SGS	
	HEF4502B	**Signetics**	**(864,898)**
	HEF4502BD	**† Signetics**	**(864)**
	883/4502B	† SSS	
	SCL4502B	SSS	
	TC4502B	† Toshiba	
Hex (Inverting) Three-State			
	TC74HC366	Toshiba	
	TC74HC368	Toshiba	
Hex (Inverting)	HD14009B	Hitachi	
	CD4009AC	National	
	CD4009AM	† National	
	CD4009A	**† RCA**	**(837)**
	CD4009AE	**RCA**	**(837)**
	CD4009UB	**† RCA**	**(837)**
	CD4009UBE	**RCA**	**(837)**
	883/4009UB	† SSS	
	SCL4009UB	SSS	
	CM4009A	† Solitron	
	CM4009AE	Solitron	
	TC4009UB	Toshiba	
Hex (Inverting)-Improved			
	54HC4049	† Fairchild	
	74HC4049	Fairchild	
	F4049BC	Fairchild	
	F4049BM	† Fairchild	
	HD14049UB	Hitachi	
	MC14049UBA	† Motorola	
	MC14049UBC	Motorola	
	MC54HC4049	† Motorola	
	MC74HC4049	Motorola	
	CD4049UB	National	
	MM54HC4049	† National	
	MM74HC4049	National	
	MN4049B	**† Panasonic**	**(828,834)**
	MN74HC4049	**Panasonic**	**(831)**
	CD4049A	**† RCA**	**(837)**
	CD4049AE	**RCA**	**(837)**
	CD4049UB	**† RCA**	**(837)**
	CD4049UBE	**RCA**	**(837)**
	CD54HC4049	**† RCA**	**(843)**
	CD74HC4049	**RCA**	**(843)**
	HCC4049UB	† SGS	
	HCF4049UB	SGS	
	74HC4049	**Signetics**	**(908)**
	74HCT4049	**Signetics**	**(908)**
	HEF4049B	**Signetics**	**(864,898)**
	HEF4049BD	**† Signetics**	**(864)**
	883/4049UB	† SSS	
	SCL4049UB	SSS	
	CM4049A	† Solitron	
	CM4049AE	Solitron	
	TC4049B	Toshiba	
	TC50H000	Toshiba	
	TC74HC4049	Toshiba	
Hex Non-Inverting			
	HD14010B	Hitachi	
	CD4010A	National	
	CD4010A	**† RCA**	**(837)**
	CD4010AE	**RCA**	**(837)**
	CD4010B	**† RCA**	**(837)**
	CD4010BE	**RCA**	**(837)**
	883/4010B	† SSS	
	SCL4010B	SSS	
	CM4010A	† Solitron	
	CM4010AE	Solitron	
	TC4010B	Toshiba	
Hex Non-Inverting-Improved			
	54HC4050	† Fairchild	
	74HC4050	Fairchild	
	F4050BC	Fairchild	
	F4050BM	† Fairchild	
	HD14050B	Hitachi	
	MC14050BA	† Motorola	
	MC14050BC	Motorola	
	MC54HC4050	† Motorola	
	MC74HC4050	Motorola	
	CD4050BC	National	
	CD4050BM	National	
	MM54HC4050	† National	
	MM74HC4050	National	
	MN4050B	**† Panasonic**	**(828,834)**
	MN74HC4050	**Panasonic**	**(831)**
	CD4050A	**† RCA**	**(837)**
	CD4050AE	**RCA**	**(837)**
	CD4050B	**† RCA**	**(837)**
	CD4050BE	**RCA**	**(837)**
	CD54HC4050	**† RCA**	**(843)**
	CD74HC4050	**RCA**	**(843)**
	HCC4050B	† SGS	
	HCF4050B	SGS	
	74HC4050	**Signetics**	**(908)**
	74HCT4050	**Signetics**	**(908)**
	HEF4050B	**Signetics**	**(864,898)**
	HEF4050BD	**† Signetics**	**(864)**
	883/4050B	† SSS	
	SCL4050B	SSS	
	CM4050A	† Solitron	
	CM4050AE	Solitron	
	TC4050B	Toshiba	
	TC50H001	Toshiba	
	TC74HC4050	Toshiba	
Hex Open Drain Active Pull Down			
	MM54C906	† National	
	MM74C906	National	
Hex Open Drain Active Pull Up			
	MM54C907	† National	
	MM74C907	National	
Hex PMOS Inverting (PMOS to CMOS or TTL)			
	MM54C903	† National	
	MM74C903	National	
Hex PMOS Non-Inverting (PMOS to CMOS or TTL)			
	MM54C904	† National	
	MM74C904	National	
Hex TTL Inverting (CMOS to TTL)			
	MM54C901	† National	
	MM74C901	National	
Hex TTL Non-Inverting (CMOS to TTL)			
	MM54C902	† National	
	MM74C902	National	
Hex Three-State, inverting			
	54HC366	† Fairchild	
	54HC368	† Fairchild	
	74HC366	Fairchild	
	74HC368	Fairchild	

(Continued)

† Military Temperature Range (−55° to 125°C)

* Typical Value

Bold face indicates additional data is provided on the page noted.

© IC MASTER 1984

DIGITAL-CMOS (Cont'd)

Buffers (Cont'd)

Function	Device	Source		Line
Hex Three-State, Inverting (Cont'd)				
	MC54HC366	† Motorola		
	MC54HC368	† Motorola		
	MC74HC366	Motorola		
	MC74HC368	Motorola		
	MM54HC366	† National		5
	MM54HC368	† National		
	MM74HC366	National		
	MM74HC368	National		
	MM74HC366	**Panasonic**	**(831)**	
	MM74HC368	**Panasonic**	**(831)**	10
	CD54HC366	**† RCA**	**(842)**	
	CD54HC368	**† RCA**	**(842)**	
	CD54HCT366	† RCA		
	CD54HCT368	† RCA		
	CD74HC366	RCA		15
	CD74HC368	RCA		
	CD74HCT366	**RCA**	**(842)**	
	CD74HCT368	**RCA**	**(842)**	
	74HC366	**Signetics**	**(908)**	
	74HC368	**Signetics**	**(908)**	20
	74HCT366	**Signetics**	**(908)**	
	74HCT368	**Signetics**	**(908)**	
	SN54HC366	† TI		
	SN54HC368	† TI		
	SN74HC366	TI		25
	SN74HC368	TI		
	TC40368	Toshiba		
	TC40H366	Toshiba		
	ZX54HCT366	† Zytrex		
	ZX54HCT368	† Zytrex		30
	ZX74HCT366	Zytrex		
	ZX74HCT368	Zytrex		
Hex Three-State				
	54HC365	† Fairchild		
	54HC367	† Fairchild		
	74HC365	Fairchild		35
	74HC367	Fairchild		
	F40097BC	Fairchild		
	F40097BM	† Fairchild		
	HD14503B	Hitachi		
	MC14503BA	† Motorola		40
	MC14503BC	Motorola		
	MC54HC365	† Motorola		
	MC54HC367	† Motorola		
	MC74HC365	Motorola		
	MC74HC367	Motorola		45
	CD4503BC	National		
	CD4503BM	† National		
	MM54HC365	† National		
	MM54HC367	† National		
	MM70C95	† National		50
	MM70C97	† National		
	MM74HC365	National		
	MM74HC367	National		
	MM80C95	National		
	MM80C97	National		55
	MN4503B	**† Panasonic**	**(828,834)**	
	MN74HC365	**Panasonic**	**(831)**	
	MN74HC367	**Panasonic**	**(831)**	
	CD4503BD	**† RCA**	**(837)**	
	CD4503BE	**RCA**	**(837)**	60
	CD54HC365	**† RCA**	**(842)**	
	CD54HC367	**† RCA**	**(842)**	
	CD54HCT365	† RCA		
	CD54HCT367	† RCA		
	CD74HC365	RCA		65
	CD74HC367	RCA		
	CD74HCT365	**RCA**	**(842)**	
	CD74HCT367	**RCA**	**(842)**	

(Continued)

Function	Device	Source		Line
Hex Three-State (Cont'd)				
	SP54HC365	**† SPI**	**(848)**	
	SP74HC365	**SPI**	**(848)**	70
	SP74HC367	SPI		
	74HC365	**Signetics**	**(907)**	
	74HC367	**Signetics**	**(908)**	
	74HCT365	**Signetics**	**(907)**	
	74HCT367	**Signetics**	**(908)**	75
	HEF40097B	**Signetics**	**(865,899)**	
	HEF40097BD	**† Signetics**	**(865)**	
	SN54HC365	† TI		
	SN74HC365	TI		
	TC40H365	Toshiba		80
	TC40H367	Toshiba		
	TC5012B	Toshiba		
	TC74HC365	Toshiba		
	TC74HC367	Toshiba		
	ZX54HCT365	† Zytrex		85
	ZX54HCT367	† Zytrex		
	ZX74HCT365	Zytrex		
	ZX74HCT367	Zytrex		
Hex	54HC07	† Fairchild		
	54HCT07	† Fairchild		90
	74HC07	Fairchild		
	74HCT07	Fairchild		
Octal Buffer/Level Translator, Inverting				
	MM54HC4305	National		
	MM74HC4305	National		
Octal Buffer/Line Driver, Three State				
	MD54HCT540R	**† Mitel**	**(3056)**	95
	MD54HCT541R	**† Mitel**	**(3057)**	
	MD54SC540	† Mitel		
	MD54SC541	† Mitel		
	MD74HCT540R	**Mitel**	**(3056)**	
	MD74HCT541R	**Mitel**	**(3057)**	100
	MD74SC540	Mitel		
	MD74SC541	Mitel		
	MC54HC540	† Motorola		
	MC54HC541	† Motorola		
	MC54HCT540	† Motorola		105
	MC54HCT541	† Motorola		
	MC74HC540	Motorola		
	MC74HC541	Motorola		
	MC74HCT540	Motorola		
	MC74HCT541	Motorola		110
	CD54HC540	**† RCA**	**(843)**	
	CD54HC541	**† RCA**	**(843)**	
	CD54HCT540	† RCA		
	CD54HCT541	† RCA		
	CD74HC540	**RCA**	**(843)**	115
	CD74HC541	**RCA**	**(843)**	
	CD74HCT540	RCA		
	CD74HCT541	RCA		
	SP54HC540	**† SPI**	**(848)**	
	SP54HC541	**† SPI**	**(848)**	120
	SP74HC540	**SPI**	**(848)**	
	SP74HC541	**SPI**	**(848)**	
	SP74HCT540	**SPI**	**(844)**	
	SP74HCT541	**SPI**	**(844)**	
	SP74SC540	SPI		125
	SP74SC541	SPI		
	74HC540	**Signetics**	**(908)**	
	74HC541	**Signetics**	**(908)**	
	74HCT540	**Signetics**	**(908)**	
	74HCT541	**Signetics**	**(908)**	130
	54HCT541	† Supertex		
	74HCT540	Supertex		
	74HCT541	Supertex		
	74SC540	Supertex		
	74SC541	Supertex		135
	ZX54HCT540	† Zytrex		
	ZX54HCT541	† Zytrex		

(Continued)

Function	Device	Source		Line
Octal Buffer/Line Driver, Three State (Cont'd)				
	ZX74HCT540	Zytrex		
	ZX74HCT541	Zytrex		
Octal Buffer/Line Driver				
	MM54C941	† National		140
	MM74C941	National		
7-Line High Voltage				
	TC5066B	Toshiba		
	TC5067B	Toshiba		

Inverters

Function	Device	Source		Line
Dual Complementary Pair Plus Inverter				
	F4007UBC	Fairchild		
	F4007UBM	† Fairchild		145
	HD14007UB	Hitachi		
	MC14007UBA	† Motorola		
	MC14007UBC	Motorola		
	CD4007C	National		
	CD4007M	† National		150
	MN4007UB	† Panasonic		
	CD4007A	**† RCA**	**(837)**	
	CD4007AE	**RCA**	**(837)**	
	CD4007UB	**† RCA**	**(837)**	
	CD4007UBE	**RCA**	**(837)**	155
	HCC4007UB	† SGS		
	HCF4007UB	SGS		
	HEF4007UB	**Signetics**	**(864,898)**	
	HEF4007UBD	† Signetics		
	883/4007UB	† SSS		160
	SCL4007UB	SSS		
	CM4007A	† Solitron		
	CM4007AE	Solitron		
	TC4007UB	Toshiba		
Hex Schmitt Trigger				
	54HC14	† Fairchild		165
	74HC14	Fairchild		
	TC74HC14	Toshiba		
Hex Unbuffered	MC54HCU04	† Motorola		
	MC74HCU04	Motorola		
	MM54HCU04	† National		170
	MM74HCU04	National		
	74HCU04	**Signetics**	**(907)**	
	TC74HCU04	Toshiba		
Hex Three-State				
	F40098BC	Fairchild		
	F40098BM	† Fairchild		175
	MM70C96	† National		
	MM70C98	† National		
	MM80C96	National		
	MM80C98	National		
	HEF40098B	**Signetics**	**(865,899)**	180
	HEF40098BD	**† Signetics**	**(865)**	
Hex	54HCT04	† Fairchild		
	74HCT04	Fairchild		
	F4069UBC	Fairchild		
	F4069UBM	† Fairchild		185
	HD14069B	Hitachi		
	MC14069UBA	† Motorola		
	MC14069UBC	Motorola		
	MC54HC04	† Motorola		
	MC54HCT04	† Motorola		190
	MC54HCT05	† Motorola		
	MC54HCT34	† Motorola		
	MC74HC04	Motorola		
	MC74HCT04	Motorola		
	MC74HCT05	Motorola		195
	MC74HCT34	Motorola		
	CD4069C	National		
	CD4069M	† National		
	MM54C04	† National		

(Continued)

† Military Temperature Range (−55° to 125°C)

* Typical Value

Bold face indicates additional data is provided on the page noted.

DIGITAL–CMOS (Cont'd)

Inverters (Cont'd)

Function	Device	Source	Line
Hex (Cont'd)			
	MM54HC04	† National	
	MM74C04	National	
	MM74HC04	National	
	MM74PC04	National	
	MN4069UB	**† Panasonic (828,834)**	5
	CD4069UB	**† RCA (837)**	
	CD4069UBE	**RCA (837)**	
	CD54HC04	**† RCA (842)**	
	CD54HCT04	† RCA	
	CD54HCU04	† RCA	10
	CD74HC04	RCA	
	CD74HCT04	**RCA (842)**	
	CD74HCU04	RCA	
	MN74HC04	RCA	
	LC4069UB	Sanyo	15
	SP54HC04	**† SPI (848)**	
	SP74HC04	**SPI (848)**	
	HCC4069UB	† SGS	
	HCF4069UB	SGS	
	74HC04	**Signetics (907)**	20
	74HCT04	**Signetics (907)**	
	HEF4069B	Signetics	
	HEF4069BD	† Signetics	
	HEF4069UB	**† Signetics (864,898)**	
	883/4069UB	† SSS	25
	883/4449UB	† SSS	
	SCL4069UB	SSS	
	SCL4449UB	SSS	
	CM4069A	† Solitron	
	CM4069AE	Solitron	30
	SN54HC04	† TI	
	SN74HC04	TI	
	TC4069UB	Toshiba	
	TC40H004	Toshiba	
	TC7404UB	Toshiba	35
	ZX54HCT04	† Zytrex	
	ZX74HCT04	Zytrex	

Counters, Binary

Function	Device	Source	Line
Clock Generator with 4-Bit			
	TC5018	Toshiba	
Divide by 2, 8 or 16			
	MM54C93	† National	
	MM74C93	National	40
Divider with 4-Bit			
	TC5027B	Toshiba	
Presettable Fully Synchronous, Synchronous Clear			
	54HC163	† Fairchild	
	74HC163	Fairchild	
	F40163BC	Fairchild	
	F40163BM	† Fairchild	45
	HD14163B	Hitachi	
	MC14163BA	† Motorola	
	MC14163BC	Motorola	
	MC54HC163	† Motorola	
	MC74HC163	Motorola	50
	CD40163BC	National	
	CD40163BM	† National	
	MM54C163	† National	
	MM54HC163	† National	
	MM74C163	National	55
	MM74HC163	National	
	MN74HC163	**Panasonic (831)**	
	CD40163B	**† RCA (839)**	
	CD40163BE	**RCA (839)**	
	CD54HC163	**† RCA (842)**	60
	CD54HCT163	† RCA	
		(Continued)	

Function	Device	Source	Line
Presettable Fully Synchronous, Synchronous Clear (Cont'd)			
	CD74HC163	RCA	
	CD74HCT163	**RCA (842)**	
	SP54HC163	**† SPI (848)**	
	SP74HC163	**SPI (848)**	65
	HCC40163	† SGS	
	HCF40163	SGS	
	74HC163	**Signetics (907)**	
	74HCT163	**Signetics (907)**	
	HEF40163B	**Signetics (865,899)**	70
	HEF40163BD	**† Signetics (865)**	
	883/4163B	† SSS	
	SCL4163B	SSS	
	TC40163B	Toshiba	
	TC40H163	Toshiba	75
	TC74HC163	Toshiba	
	ZX54HCT163	† Zytrex	
	ZX74HCT163	Zytrex	
Presettable Synchronous, Asynchronous Clear			
	F40161BC	Fairchild	
	F40161BM	† Fairchild	80
	HD14161B	Hitachi	
	MC14161BA	† Motorola	
	MC14161BC	Motorola	
	MC54HC161	† Motorola	
	MC74HC161	Motorola	85
	CD40161BC	National	
	CD40161BM	† National	
	MM54C161	† National	
	MM54HC161	† National	
	MM74C161	National	90
	MM74HC161	National	
	MN40161B	**† Panasonic (828,834)**	
	MN74HC161	**Panasonic (830)**	
	CD40161B	**† RCA (839)**	
	CD40161BE	**RCA (839)**	95
	CD54HC161	**† RCA (842)**	
	CD54HCT161	† RCA	
	CD74HC161	RCA	
	CD74HCT161	**RCA (842)**	
	SP54HC161	**† SPI (848)**	100
	SP74HC161	**SPI (848)**	
	HCC40161B	† SGS	
	HCF40161B	SGS	
	74HC161	**Signetics (907)**	
	74HCT161	**Signetics (907)**	105
	HEF40161B	**Signetics (865,899)**	
	HEF40161BD	**† Signetics (865)**	
	883/4161B	† SSS	
	SCL4161B	SSS	
	TC40161B	Toshiba	110
	TC40H161	Toshiba	
	TC74HC161	Toshiba	
	ZX54HCT161	† Zytrex	
	ZX74HCT161	Zytrex	
Presettable Up/Down			
	54HC193	† Fairchild	115
	54HC4516	† Fairchild	
	54HC569	† Fairchild	
	74HC193	Fairchild	
	74HC4516	Fairchild	
	74HC569	Fairchild	120
	F40193BC	Fairchild	
	F40193BM	† Fairchild	
	F4516BC	Fairchild	
	F4516BM	† Fairchild	
	HD14516B	Hitachi	125
	MC14516BA	† Motorola	
	MC14516BC	Motorola	
		(Continued)	

Function	Device	Source	Line
Presettable Up/Down (Cont'd)			
	MC54HC191	† Motorola	
	MC54HC193	† Motorola	
	MC74HC191	Motorola	130
	MC74HC193	Motorola	
	CD40193BC	National	
	CD40193BM	† National	
	CD4516BC	National	
	CD4516BM	† National	135
	MM54C193	† National	
	MM54HC193	† National	
	MM74C193	National	
	MM74HC193	National	
	MN4516B	**† Panasonic (828,834)**	140
	MN74HC193	**Panasonic (831)**	
	CD40193B	**† RCA (839)**	
	CD40193BE	**RCA (839)**	
	CD4516B	**† RCA (839)**	
	CD4516BE	**RCA (839)**	145
	CD54HC191	**† RCA (842)**	
	CD54HC193	**† RCA (842)**	
	CD54HCT191	† RCA	
	CD54HCT193	† RCA	
	CD74HC191	RCA	150
	CD74HC193	RCA	
	CD74HCT191	**RCA (842)**	
	CD74HCT193	**RCA (842)**	
	SP54HC193	**† SPI (848)**	
	SP74HC193	**SPI (848)**	155
	HCC4516B	† SGS	
	HCF4516B	SGS	
	74HC191	**Signetics (907)**	
	74HC193	**Signetics (907)**	
	74HCT191	**Signetics (907)**	160
	74HCT193	**Signetics (907)**	
	HEF40193B	**Signetics (865,899)**	
	HEF40193BD	**† Signetics (865)**	
	HEF4516B	**Signetics (864,898)**	
	HEF4516BD	**† Signetics (864)**	165
	883/4193B	† SSS	
	883/4516B	† SSS	
	SCL4193B	SSS	
	SCL4516B	SSS	
	TC40193	Toshiba	170
	TC40H193	Toshiba	
	TC4516B	Toshiba	
	TC74HC193	Toshiba	
Presettable 8-Bit Down			
	CD40103B	**† RCA (839)**	
	CD40103BE	**RCA (839)**	175
	HCC40103B	† SGS	
	HCF40103B	SGS	
	TC40103B	Toshiba	
Programmable Divide-by-N, 4-Bit			
	F4526BC	Fairchild	
	F4526BM	† Fairchild	180
	HD14526B	Hitachi	
	MC14526BA	† Motorola	
	MC14526BC	Motorola	
	CD4526BC	National	
	CD4526BM	† National	185
	HEF4526B	**Signetics (864,898)**	
	HEF4526BD	**† Signetics (864)**	
	883/4526B	† SSS	
	SCL4526B	SSS	
	TC4526B	Toshiba	190

† Military Temperature Range (−55° to 125°C)

* Typical Value

Bold face indicates additional data is provided on the page noted.

© IC MASTER 1984

DIGITAL–CMOS (Cont'd)

Counters, Binary (Cont'd)

Function	Device	Source	Line
Dual Synchronous			
	F4520BC	Fairchild	
	F4520BM	† Fairchild	
	HD14520B	Hitachi	
	MC14520BA	† Motorola	
	MC14520BC	Motorola	5
	MC54HC393	† Motorola	
	MC74HC393	Motorola	
	CD4520BC	National	
	CD4520BM	† National	
	~~MN4520B~~	~~† Panasonic~~ (828,834)	10
	CD4520B	**† RCA (839)**	
	CD4520BE	**RCA (839)**	
	HCC4520B	† SGS	
	HCF4520B	SGS	
	74HC4520	**Signetics (908)**	15
	74HCT4520	**Signetics (908)**	
	HEF4520B	**Signetics (864,898)**	
	HEF4520BD	**† Signetics (864)**	
	883/4520B	† SSS	
	SCL4520B	SSS	20
	CM4520B	† Solitron	
	CM4520BE	Solitron	
	SN54HC393	† TI	
	SN74HC393	TI	
	TC4520B	Toshiba	25
Dual 4-Bit	54HC393	† Fairchild	
	74HC393	Fairchild	
	MM54HC393	† National	
	MM74HC393	National	
	MM74HC393	**Panasonic (831)**	30
	CD54HC393	**† RCA (843)**	
	CD54HCT393	† RCA	
	CD74HC393	**RCA (843)**	
	CD74HCT393	RCA	
	SP54HC393	**† SPI (848)**	35
	SP74HC393	**SPI (848)**	
	74HC393	**Signetics (908)**	
	74HCT393	**Signetics (908)**	
	TC40H393	Toshiba	
	TC74HC393	Toshiba	40
Dual	**CD54HC4520**	**† RCA (843)**	
	CD54HCT4520	† RCA	
	CD74HC4520	**RCA (843)**	
	CD74HCT4520	RCA	
4-Bit, Divide by 2 and by 5			
	SP54HC93	**† SPI (848)**	45
	SP74HC93	**SPI (848)**	
5, 6, 7, 8, 9-Stage			
	TC5048	Toshiba	
7-Stage	F4024BC	Fairchild	
	F4024BM	† Fairchild	
	HD14024B	Hitachi	50
	MC14024BA	† Motorola	
	MC14024BC	Motorola	
	MC54HC4024	† Motorola	
	MC74HC4024	Motorola	
	CD4024BC	National	55
	CD4024BM	† National	
	MN4024B	**† Panasonic (828,834)**	
	CD4024A	**† RCA (838)**	
	CD4024AE	**RCA (838)**	
	CD4024B	**† RCA (838)**	60
	CD4024BE	**RCA (838)**	
	CD54HC4024	**† RCA (843)**	
	CD54HCT4024	† RCA	
	CD74HC4024	**RCA (843)**	
	CD74HCT4024	RCA	65
		(Continued)	

Function	Device	Source	Line
7-Stage		(Cont'd)	
	HCC4024B	† SGS	
	HCF4024B	SGS	
	74HC4024	**Signetics (908)**	
	74HCT4024	**Signetics (908)**	
	HEF4024B	**Signetics (864,898)**	70
	HEF4024BD	**† Signetics (864)**	
	883/4024B	† SSS	
	SCL4024B	SSS	
	CM4024A	† Solitron	
	CM4024AE	Solitron	75
	TC4024B	Toshiba	
	TC74HC4024	Toshiba	
8-Bit, Down	**CD54HC40103**	**† RCA (843)**	
	CD54HCT40103	† RCA	
	CD74HC40103	**RCA (843)**	80
	CD74HCT40103	RCA	
	74HC40103	**Signetics (908)**	
	74HCT40103	**Signetics (908)**	
8-Stage Synchronous			
	883/4404B	† SSS	
	SCL4404B	SSS	85
12-Stage	54HC4040	† Fairchild	
	74HC4040	Fairchild	
	F4040BM	† Fairchild	
	F404BC	Fairchild	
	HD14040B	Hitachi	90
	MC14040BA	† Motorola	
	MC14040BC	Motorola	
	MC54HC4040	† Motorola	
	MC74HC4040	Motorola	
	CD4040BC	National	95
	CD4040BM	† National	
	MM54HC4040	† National	
	MM74HC4040	National	
	MN4040B	**† Panasonic (828,834)**	
	MN74HC4040	**Panasonic (831)**	100
	CD4040A	**† RCA (838)**	
	CD4040AE	**RCA (838)**	
	CD4040B	**† RCA (838)**	
	CD4040BE	**RCA (838)**	
	CD54HC4040	**† RCA (843)**	105
	CD54HCT4040	† RCA	
	CD74HC4040	**RCA (843)**	
	CD74HCT4040	RCA	
	SP74HC4040	SPI	
	HCC4040B	† SGS	110
	HCF4040B	SGS	
	74HC4040	**Signetics (908)**	
	74HCT4040	**Signetics (908)**	
	HEF4040B	**Signetics (864,898)**	
	HEF4040BD	**† Signetics (864)**	115
	883/4040B	† SSS	
	SCL4040B	SSS	
	CM4040A	† Solitron	
	CM4040AE	Solitron	
	TC4040B	Toshiba	120
	TC74HC4040	Toshiba	
14, 15, 16-Stage (with reset)			
	TC5036	Toshiba	
14-Stage	54HC4020	† Fairchild	
	74HC4020	Fairchild	
	F4020BC	Fairchild	125
	F4020BM	† Fairchild	
	HD14020B	Hitachi	
	MC14020BA	† Motorola	
	MC14020BC	Motorola	
	MC54HC4020	† Motorola	130
	MC74HC4020	Motorola	
		(Continued)	

Function	Device	Source	Line
14-Stage		(Cont'd)	
	CD4020BC	National	
	CD4020BM	† National	
	MM54HC4020	† National	
	MM74HC4020	National	135
	CD4020A	**† RCA (839)**	
	CD4020AE	**RCA (839)**	
	CD4020B	**† RCA (839)**	
	CD4020BE	**RCA (839)**	
	CD54HC4020	**† RCA (843)**	140
	CD54HCT4020	† RCA	
	~~**CD74HC4020**~~	~~**RCA (843)**~~	
	CD74HCT4020	RCA	
	SP54HC4020	**† SPI (848)**	
	SP74HC4020	**SPI (848)**	145
	HCC4020B	† SGS	
	HCF4020B	SGS	
	74HC4020	**Signetics (908)**	
	74HCT4020	**Signetics (908)**	
	HEF4020B	**Signetics (864,898)**	150
	HEF4020BD	**† Signetics (864)**	
	883/4020B	† SSS	
	SCL4020B	SSS	
	CM4020A	† Solitron	
	CM4020AE	Solitron	155
	TC4020B	Toshiba	
	TC74HC4020	Toshiba	
14-Stage with Oscillator			
	MC14060B	Motorola	
	MC54HC4060	† Motorola	
	MC74HC4060	Motorola	160
	CD4060BC	National	
	CD4060BM	† National	
	MM54HC4060	† National	
	MM74HC4060	National	
	CD4060A	**† RCA (839)**	165
	CD4060AE	**RCA (839)**	
	CD4060B	**† RCA (839)**	
	CD4060BE	**RCA (839)**	
	CD54HC4060	**† RCA (843)**	
	CD54HCT4060	RCA	170
	CD74HC4060	**RCA (843)**	
	CD74HCT4060	RCA	
	HCC4060B	† SGS	
	HCF4060B	SGS	
	74HC4060	**† Signetics (908)**	175
	74HCT4060	**† Signetics (908)**	
	HEF4060B	**Signetics (864,898)**	
	HEF4060BD	**† Signetics (864)**	
	883/4060B	† SSS	
	SCL4060B	SSS	180
	SN54HC4060	† TI	
	SN74HC4060	TI	
	TC74HC4060	Toshiba	

Counters, Decade

Function	Device	Source	Line
Counter/Divider, 7 Segment Display Output and Display Enable	**CD4026A**	**† RCA (839)**	
	CD4026AE	**RCA (839)**	185
	CD4026B	**† RCA (839)**	
	CD4026BE	**RCA (839)**	
	HCC4026B	† SGS	
	HCF4026B	SGS	
	883/4026AB	† SSS	190
	883/4426AB	† SSS	
	SCL4026AB	SSS	
	SCL4426AB	SSS	
	CM4026A	† Solitron	
	CM4026AE	Solitron	195

† Military Temperature Range (−55° to 125°C)

* Typical Value

Bold face indicates additional data is provided on the page noted.

DIGITAL-CMOS (Cont'd)

Counters, Decade (Cont'd)

Function	Device	Source	Line
Counter/Divider, 7 Segment Display Output and Ripple Blanking	**CD4033A**	**† RCA (839)**	
	CD4033AE	**RCA (839)**	
	CD4033B	**† RCA (839)**	
	CD4033BE	**RCA (839)**	
	HCC4033B	† SGS	5
	HCF4033B	SGS	
	883/4033AB	† SSS	
	883/4433AB	† SSS	
	SCL4033AB	SSS	
	SCL4433AB	SSS	10
	CM4033A	† Solitron	
	CM4033AE	Solitron	
Counter/Divider, 10 Line Output			
	54HC4017	† Fairchild	
	74HC4017	Fairchild	
	F4017BC	Fairchild	15
	F4017BM	† Fairchild	
	HD14017B	Hitachi	
	MC14017BA	† Motorola	
	MC14017BC	Motorola	
	MC54HC4017	† Motorola	20
	MC74HC4017	Motorola	
	CD4017BC	National	
	CD4017BM	† National	
	MM54HC4017	† National	
	MM74HC4017	National	25
	MN4017B	**† Panasonic (828,834)**	
	CD4017A	**† RCA (839)**	
	CD4017AE	**RCA (839)**	
	CD4017B	**† RCA (839)**	
	CD4017BE	**RCA (839)**	30
	CD54HC4017	**† RCA (843)**	
	CD54HCT4017	† RCA	
	CD74HC4017	**RCA (843)**	
	CD74HCT4017	RCA	
	SP54HC4017	**† SPI (848)**	35
	SP74HC4017	**SPI (848)**	
	HCC4017B	† SGS	
	HCF4017B	SGS	
	74HC4017	**Signetics (908)**	
	74HCT4017	**Signetics (908)**	40
	HEF4017B	**Signetics (864,898)**	
	HEF4017BD	**† Signetics (864)**	
	883/4017B	† SSS	
	SCL4017B	SSS	
	CM4017A	† Solitron	45
	CM4017AE	Solitron	
	SN54HC4017	† TI	
	SN74HC4017	TI	
	TC4017B	Toshiba	
	TC74HC4017	Toshiba	50
Counter/Latch/Display Driver			
	ICM7208	Intersil	
Divide by 2 and by 5			
	SP54HC90	**† SPI (848)**	
	SP74HC90	**SPI (848)**	
Presettable Fully Synchronous, Synchronous Clear			
	54HC162	† Fairchild	
	74HC162	Fairchild	55
	F40162BC	Fairchild	
	F40162BM	† Fairchild	
	HD14162B	Hitachi	
	MC14162BA	† Motorola	
	MC14162BC	Motorola	60
	MC54HC162	† Motorola	
	MC74HC162	Motorola	
	CD40162BC	National	
	CD40162BM	† National	
		(Continued)	

Function	Device	Source	Line
Presettable Fully Synchronous, Synchronous Clear (Cont'd)			
	MM54C162	† National	65
	MM54HC162	† National	
	MM74C162	National	
	MM74HC162	National	
	CD40162B	**† RCA (839)**	
	CD40162BE	**RCA (839)**	70
	CD54HC162	**† RCA (842)**	
	CD54HCT162	† RCA	
	CD74HC162	RCA	
	CD74HCT162	**RCA (842)**	
	SP54HC162	**† SPI (848)**	75
	SP74HC162	**SPI (848)**	
	HCC40162B	† SGS	
	HCF40162B	SGS	
	74HC162	**Signetics (907)**	
	74HCT162	**Signetics (907)**	80
	HEF40162B	**Signetics (865,899)**	
	HEF40162BD	**† Signetics (865)**	
	883/4162B	† SSS	
	SCL4162B	SSS	
	SN54HC162	† TI	85
	SN74HC162	TI	
	TC40162B	Toshiba	
	TC40H162	Toshiba	
	TC74HC162	Toshiba	
	ZX54HCT162	† Zytrex	90
	ZX74HCT162	Zytrex	
Presettable (sets to 0 or 9, divides by 2, 5 or 10)			
	MM54C90	† National	
Presettable (sets to 0 or 9, divides by 2, 5 or 10)			
	MM74C90	National	
Presettable Synchronous, Asynchronous Clear			
	54HC160	† Fairchild	
	74HC160	Fairchild	95
	F40160BC	Fairchild	
	F40160BM	† Fairchild	
	HD14160	Hitachi	
	MC14160BA	† Motorola	
	MC14160BC	Motorola	100
	MC54HC160	† Motorola	
	MC74HC160	Motorola	
	CD40160BC	National	
	CD40160BM	† National	
	MM54C160	† National	105
	MM54HC160	† National	
	MM74C160	National	
	MM74HC160	National	
	MN74HC160	**Panasonic (830)**	
	CD40160B	**† RCA (839)**	110
	CD40160BE	**RCA (839)**	
	CD54HC160	**† RCA (842)**	
	CD54HCT160	† RCA	
	CD74HC160	RCA	
	CD74HCT160	**RCA (842)**	115
	SP54HC160	**† SPI (848)**	
	SP74HC160	**SPI (848)**	
	HCC40160B	† SGS	
	HCF40160B	SGS	
	HEF40160B	**Signetics (865,899)**	120
	HEF40160BD	**† Signetics (865)**	
	883/4160B	† SSS	
	SCL4160B	SSS	
	SN54HC160	† TI	
	SN74HC160	TI	125
	TC40160B	Toshiba	
	TC40H160	Toshiba	
	TC74HC160	Toshiba	
	ZX54HCT160	† Zytrex	
	ZX74HCT160	Zytrex	130

Function	Device	Source	Line
Presettable Up/Down			
	54HC192	† Fairchild	
	74HC192	Fairchild	
	F40192BC	Fairchild	
	F40192BM	† Fairchild	
	F4510BC	Fairchild	135
	F4510BM	† Fairchild	
	HD14510B	Hitachi	
	HCTR0200	Hughes	
	MC14510BA	† Motorola	
	MC14510BC	Motorola	140
	MC54HC192	† Motorola	
	MC74HC192	Motorola	
	CD40192BC	National	
	CD40192BM	† National	
	CD4510BC	National	145
	CD4510BM	† National	
	MM54C192	† National	
	MM54HC192	† National	
	MM74C192	National	
	MM74HC192	National	150
	MN74HC192	**Panasonic (831)**	
	CD40192B	**† RCA (839)**	
	CD40192BE	**RCA (839)**	
	CD4510B	**† RCA (839)**	
	CD4510BE	**RCA (839)**	155
	CD54HC192	**† RCA (842)**	
	CD54HCT192	† RCA	
	CD74HC192	RCA	
	CD74HCT192	**RCA (842)**	
	SP54HC192	**† SPI (848)**	160
	SP74HC192	**SPI (848)**	
	HCC40192B	† SGS	
	HCC4510B	† SGS	
	HCF40192B	SGS	
	HCF4510B	SGS	165
	74HC192	**Signetics (907)**	
	74HCT192	**Signetics (907)**	
	HEF40192B	**Signetics (865,899)**	
	HEF40192BD	**† Signetics (865)**	
	HEF4510B	**Signetics (864,898)**	170
	HEF4510BD	**† Signetics (864)**	
	883/4192B	† SSS	
	883/4510B	† SSS	
	SCL4192B	SSS	
	SCL4510B	SSS	175
	SN54HC192	† TI	
	SN74HC192	TI	
	TC40192B	Toshiba	
	TC40H192	Toshiba	
	TC4510B	Toshiba	180
	TC74HC192	Toshiba	
Presettable Up/Down with mode control			
	74HC190	**Signetics (907)**	
	74HCT190	**Signetics (907)**	
Presettable 2-Decade Down, BCD			
	CD40102B	**† RCA (839)**	
	CD40102BE	**RCA (839)**	185
	CD54HC40102	**† RCA (843)**	
	CD54HCT40102	† RCA	
	CD74HC40102	**RCA (843)**	
	CD74HCT40102	RCA	
	HCC40102B	† SGS	190
	HCF40102B	SGS	
	TC40102B	† Toshiba	
Programmable Divide-by-N, 4-Bit			
	F4522BC	Fairchild	
	F4522BM	† Fairchild	
	HD14522B	Hitachi	195
	MC14522BA	† Motorola	
	MC14522BC	Motorola	
		(Continued)	

† Military Temperature Range (−55° to 125°C)

* Typical Value

Bold face indicates additional data is provided on the page noted.

© IC MASTER 1984

DIGITAL–CMOS (Cont'd)

Counters, Decade (Cont'd)

Function	Device	Source	
Programmable Divide-by-N, 4-Bit (Cont'd)			
	CD4522BC	National	
	CD4522BM	† National	
	HEF4522B	**Signetics**	**(864,898)**
	883/4522B	† SSS	
	SCL4522B	SSS	
	TC4522B	Toshiba	
Up/Down Counter/Decoder/Latch/Driver (direct 7-segment driver)	**CD40110B**	**† RCA**	**(839)**
	CD40110BE	**RCA**	**(839)**
Up/Down, Programmable			
	54HC4510	† Fairchild	
	74HC4510	Fairchild	
Up/Down, Synchronous			
	MC54HC190	† Motorola	
	MC74HC190	Motorola	
	CD54HC190	**† RCA**	**(842)**
	CD54HCT190	† RCA	
	CD74HC190	RCA	
	CD74HCT190	**RCA**	**(842)**
Up/Down, Three-State			
	54HC568	† Fairchild	
	74HC568	Fairchild	
Dual Synchronous			
	F4518BC	Fairchild	
	F4518BM	† Fairchild	
	HD14518B	Hitachi	
	MC14518BA	† Motorola	
	MC14518BC	Motorola	
	MC54HC390	† Motorola	
	MC74HC390	Motorola	
	CD4518BC	National	
	CD4518BM	† National	
	MN4518B	**† Panasonic**	**(828,834)**
	CD4518B	**† RCA**	**(839)**
	CD4518BE	**RCA**	**(839)**
	CD54HC4518	**† RCA**	**(843)**
	CD54HCT4518	† RCA	
	CD74HC4518	**RCA**	**(843)**
	CD74HCT4518	RCA	
	HCC4518B	† SGS	
	HCF4518B	SGS	
	74HC4518	**Signetics**	**(908)**
	74HCT4518	**Signetics**	**(908)**
	HEF4518B	**Signetics**	**(864,898)**
	HEF4518BD	**† Signetics**	**(864)**
	883/4518B	† SSS	
	SCL4518B	SSS	
	CM4518B	† Solitron	
	CM4518BE	Solitron	
	SN54HC390	† TI	
	SN74HC390	TI	
	TC4518B	Toshiba	
Dual, 4-Bit	TC74HC390	Toshiba	
Dual	54HC390	† Fairchild	
	74HC390	Fairchild	
	MM54HC390	† National	
	MM74HC390	National	
	MN74HC390	**Panasonic**	**(831)**
	CD54HC390	**† RCA**	**(843)**
	CD54HCT390	† RCA	
	CD74HC390	**RCA**	**(843)**
	CD74HCT390	RCA	
	74HC390	**Signetics**	**(908)**
	74HCT390	**Signetics**	**(908)**
	TC40HC390	Toshiba	
3- 1/2 Digit Counter to BCD Driver			
	HCTR4010	Hughes	
	HCTR6010	Hughes	
	CM4102	† Solitron	
3-Decade, Decoder, Driver			
	LC7960	Sanyo	
3-Decade Multiplexed Output			
	F4553BC	Fairchild	
	F4553BM	† Fairchild	
	HD14553B	Hitachi	
	MC14553BA	† Motorola	
	MC14553BC	Motorola	
4- 1/2 Digit Counter/Timer			
	ICM7236A	Intersil	
4- 1/2 Digit Up Counter			
	ICM7224	**Intersil**	**(789)**
	ICM7224A	**Intersil**	**(789)**
	ICM7225	**Intersil**	**(789)**
	ICM7225A	**Intersil**	**(789)**
4- 1/2 Digit Up-Down Counter/Latch/Decoder Driver, LCD			
	MM74C946	National	
4- 1/2 Digit	ICM7236	Intersil	
4- 1/2-Digit, Programmable			
	TC9122	Toshiba	
4-Digit, Multiplexed Output, Left Digit Counts to 2- (Maximum count 1999.)			
	MM74C928	National	
4-Digit, Multiplexed Output, Second Digit Counts to 6 (Maximum count 9599.)			
	MM74C927	National	
4-Digit Up/Down, Counter/Latch/Decoder Driver, LCD			
	MM74C945	National	
	MM74C947	National	
4-Digit Up/Down Counter/Latch/Display Driver			
	ICM7217	**Intersil**	**(782)**
	ICM7217A	**Intersil**	**(782)**
	ICM7227	**Intersil**	**(782)**
	ICM7227A	**Intersil**	**(782)**
4-Digit Up/Down Counter/Latch/Display Driver; Cascadable, Synchronous, Presettable, BCD Output (versions have either common anode or cathode LED direct 7 segment and digit driver; 9999 or 5959 count; hard wire control: 7217; processor control: 7227; 5 V supply)	**ICM7217B**	**Intersil**	**(782)**
	ICM7217C	**Intersil**	**(782)**
	ICM7227B	**Intersil**	**(782)**
	ICM7227C	**Intersil**	**(782)**
4-Decade, Decoder, Driver			
	LC7961	Sanyo	
4-Decade Divider			
	RDD104	**LSIComp**	**(803)**
4-Decade Divide-by-N			
	CD4059A	**† RCA**	**(839)**
	CD4059AE	**RCA**	**(839)**
	HEF4059B	**Signetics**	**(864,898)**
	HEF4059BD	**† Signetics**	**(864)**
4-Decade, Multiplexed Output (The 926 gives carry at 6000.)	MM74C925	National	
	MM74C926	National	
4-Decade Up/Down, with Timer			
	TC5010	Toshiba	
4-Decade	**HEF4737**	**Signetics**	**(865,899)**
	TC5001	Toshiba	
	TC5037	Toshiba	
	TC5051	Toshiba	
	TC5052	Toshiba	
	TC5053	Toshiba	
	TC5054	Toshiba	
5-Decade, Multiplexed Output			
	HD14534B	Hitachi	
	MC14534BA	† Motorola	
	MC14534BC	Motorola	
	HEF4534B	**† Signetics**	**(865,898)**
6-Digit	TC5032	Toshiba	

Counters, Miscellaneous

Function	Device	Source	
Divide-by-8 Counter/Divider, Decoded Output			
	F4022BC	Fairchild	
	F4022BM	† Fairchild	
	MC14022BA	† Motorola	
	MC14022BC	Motorola	
	CD4022BC	National	
	CD4022BM	† National	
	CD4022A	**† RCA**	**(839)**
	CD4022AE	**RCA**	**(839)**
	CD4022B	**† RCA**	**(839)**
	CD4022BE	**RCA**	**(839)**
	HCC4022B	† SGS	
	HCF4022B	SGS	
	HEF4022B	**Signetics**	**(864,898)**
	HEF4022BD	**† Signetics**	**(864)**
	883/4022B	† SSS	
	SCL4022B	SSS	
	CM4022A	† Solitron	
	CM4022AE	Solitron	
	TC4022B	Toshiba	
	TC74HC4022	† Toshiba	
Divide-by-60, BCD Output (industrial time base generator)			
	HD14566B	Hitachi	
	MC14566BA	† Motorola	
	MC14566BC	Motorola	
Frequency Counter			
	ICM7216	**Intersil**	**(781)**
	ICM7226	**Intersil**	**(796)**
Phase Comparator and Programmable			
	HD14568B	Hitachi	
	MC14568BA	† Motorola	
	MC14568BC	Motorola	
Presettable Divide-by-N			
	F4018BC	Fairchild	
	F4018BM	† Fairchild	
	HD14018B	Hitachi	
	MC14018BA	† Motorola	
	MC14018BC	Motorola	
	CD4018BC	National	
	CD4018BM	† National	
	CD4018A	**† RCA**	**(839)**
	CD4018AE	**RCA**	**(839)**
	CD4018B	**† RCA**	**(839)**
	CD4018BE	**RCA**	**(839)**
	HCC4018B	† SGS	
	HCF4018B	SGS	
	HEF4018B	**Signetics**	**(864,898)**
	HEF4018BD	**† Signetics**	**(864)**
	883/4018B	† SSS	
	SCL4018B	SSS	
	CM4018A	† Solitron	
	CM4018AE	Solitron	
	TC4018B	Toshiba	
Presettable Up/Down Binary or Decade			
	F4029BC	Fairchild	
	F4029BM	† Fairchild	
	MC14029BA	† Motorola	
	MC14029BC	Motorola	
	CD4029BC	National	
	CD4029BM	† National	

(Continued)

† Military Temperature Range (−55° to 125°C)

* Typical Value

Bold face indicates additional data is provided on the page noted.

DIGITAL–CMOS (Cont'd)

Function	Device	Source	Line
Counters, Miscellaneous (Cont'd)			
Presettable Up/Down Binary or Decade (Cont'd)			
	MN4029B	**† Panasonic (828,834)**	
	CD4029A	**† RCA (839)**	
	CD4029B	**† RCA (839)**	
	CD4029BE	**RCA (839)**	
	HCC4029B	† SGS	5
	HCF4029B	SGS	
	HEF4029B	**Signetics (864,898)**	
	HEF4029BD	**† Signetics (864)**	
	883/4029B	† SSS	
	SCL4029B	SSS	10
	CM4029A	† Solitron	
	CM4029AE	Solitron	
	TC4029B	Toshiba	
Binary/Decade with Two Reset Functions			
	TC5026B	Toshiba	
Dual Programmable Divide-by-N Binary/Decade			15
	HD14022B	Hitachi	
	HD14569B	Hitachi	
	MC14569BC	† Motorola	
See also CMOS Oscillators/Dividers and Digital-Special			
Decoders			
N-Bit (for I/O interface)			
	HCMP1853	Hughes	
	HCMP1853C	Hughes	20
	HMMP1853	† Hughes	
	HMMP1853C	† Hughes	
	CDP1853	**RCA (1595)**	
	CDP1853C	**RCA (1595)**	
BCD-to-Decimal			
	54HC42	† Fairchild	25
	73HC42	Fairchild	
	F4028BC	Fairchild	
	F4028BM	† Fairchild	
	HD14028B	Hitachi	
	MC14028BA	† Motorola	30
	MC14028BC	Motorola	
	MC54HC42	† Motorola	
	MC74HC42	Motorola	
	CD4028BC	National	
	CD4028BM	† National	35
	MM54C42	† National	
	MM54HC42	† National	
	MM74C42	National	
	MM74HC42	National	
	MN4028B	**† Panasonic (828)**	40
	MN74HC42	**Panasonic (830)**	
	CD4028A	**† RCA (837)**	
	CD4028AE	**RCA (837)**	
	CD4028B	**† RCA (837)**	
	CD4028BE	**RCA (837)**	45
	CD54HC42	**† RCA (842)**	
	CD54HCT42	† RCA	
	CD74HC42	RCA	
	CD74HCT42	**RCA (842)**	
	SP54HC42	**† SPI (848)**	50
	SP74HC42	**SPI (848)**	
	HCC4028B	† SGS	
	HCF4028B	SGS	
	74HC42	**Signetics (907)**	
	74HCT42	**Signetics (907)**	55
	HEF4028B	**Signetics (864,898)**	
	HEF4028BD	**† Signetics (864)**	
	883/4028B	† SSS	
	SCL4028B	SSS	
	CM4028A	† Solitron	60
		(Continued)	

Function	Device	Source	Line
BCD-to-Decimal (Cont'd)			
	CM4028AE	Solitron	
	SN54HC42	† TI	
	SN74HC42	TI	
	TC4028B	Toshiba	
	TC40H042	Toshiba	65
	TC74HC42	Toshiba	
BCD-to-7 Segment Decoder/Driver			
	MC14547BA	† Motorola	
	MC14547BC	Motorola	
BCD-to-7-Segment			
	HD14558B	Hitachi	
	MC14558BA	† Motorola	70
	MC14558BC	Motorola	
	MM54C48	† National	
	MM74C48	National	
	TC5002B	Toshiba	
Dual Binary to 1 of 4 Decoder/Demultiplexer (high)			
	F4555BC	Fairchild	75
	F4555BM	† Fairchild	
	HD14555B	Hitachi	
	MC14555BA	† Motorola	
	MC14555BC	Motorola	
	CD4555B	**† RCA (837,839)**	80
	CD4555BE	**RCA (837,839)**	
	HCC4555B	† SGS	
	HCF4555B	SGS	
	HEF4555B	**Signetics (865,899)**	
	HEF4555BD	**† Signetics (865)**	85
	883/4555B	† SSS	
	SCL4555B	SSS	
	TC4555B	Toshiba	
Dual Binary to 1 of 4 Decoder/Demultiplexer (low)			
	F4556BC	Fairchild	
	F4556BM	† Fairchild	90
	MC14556BA	† Motorola	
	MC14556BC	Motorola	
	MN4556B	† Panasonic	
	CD4556B	**† RCA (837,839)**	
	CD4556BE	**RCA (837,839)**	95
	HIT	† RCA	
	HCC4556B	† SGS	
	HCF4556B	SGS	
	HEF4556B	**Signetics (865,899)**	
	HEF4556BD	**† Signetics (865)**	100
	883/4556B	† SSS	
	SCL4556B	SSS	
	TC4556B	Toshiba	
Dual 2-Line to 4-Line Decoder/Demultiplexer			
	54HC139	† Fairchild	
	74HC139	Fairchild	105
	G74SC139	GTEMicro	
	MD54HCT139R	**† Mitel (3049)**	
	MD54SC139	† Mitel	
	MD74HCT139R	**Mitel (3049)**	
	MD74SC139	Mitel	110
	MC54HC139	† Motorola	
	MC74HC139	Motorola	
	MM54HC139	† National	
	MM74HC139	National	
	MN74HC139	**Panasonic (830)**	115
	MV74SC239	Plessey	
	CD54HC139	**† RCA (842)**	
	CD54HCT139	† RCA	
	CD74HC139	RCA	
	CD74HCT139	**RCA (842)**	120
	SP54HC139	**† SPI (848)**	
	SP74HC139	**SPI (848)**	
	SP74HCT139	**SPI (844)**	
	SP74SC139	SPI	
	74HC139	**Signetics (907)**	125
		(Continued)	

Function	Device	Source	Line
Dual 2-Line to 4-Line Decoder/Demultiplexer (Cont'd)			
	74HCT139	**Signetics (907)**	
	54HCT139	† Supertex	
	54HCT239	† Supertex	
	74HCT139	Supertex	
	74HCT239	Supertex	130
	74SC139	Supertex	
	74SC239	Supertex	
	SN54HC139	† TI	
	SN74HC139	TI	
	TC40H139	Toshiba	135
	TC74HC139	Toshiba	
	ZX54HCT139	† Zytrex	
	ZX54HCT239	† Zytrex	
	ZX74HCT139	Zytrex	
	ZX74HCT239	Zytrex	140
Dual 2-Line to 4-Line Decoder/Demultiplexer. Totem Pole Output. (or 3-Lint to 8-Line Decoder/Demultiplexer)			
	TC40H155	Toshiba	
1 of 4 Decoder/Demultiplexer (high)			
	SP74HC239	SPI	
1 of 8 Decoder/Demultiplexer (high)			
	SP74HC238	SPI	
1 of 8 Strobed	883/4428B	† SSS	
	SCL4428B	SSS	145
3-Line to 8-Line Decoder/Demultiplexer			
	54HC138	† Fairchild	
	74HC138	Fairchild	
	G74SC138	GTEMicro	
	MD54HCT138R	**† Mitel (3048)**	
	MD54SC138	† Mitel	150
	MD74HCT138R	**Mitel (3048)**	
	MD74SC138	Mitel	
	MC54HC138	† Motorola	
	MC54HCT138	† Motorola	
	MC74HC138	Motorola	155
	MC74HCT138	Motorola	
	MM54HC138	† National	
	MM74HC138	National	
	MM74PC138	National	
	MN74HC138	**Panasonic (830)**	160
	CD54HC138	**† RCA (842)**	
	CD54HC238	**† RCA (842)**	
	CD54HCT138	† RCA	
	CD74HC138	RCA	
	CD74HC238	RCA	165
	CD74HCT138	**RCA (842)**	
	CDP1873C	**RCA (1595)**	
	SP54HC138	**† SPI (848)**	
	SP74HC138	**SPI (848)**	
	SP74HCT138	**SPI (844)**	170
	SP74SC138	SPI	
	74HC138	**Signetics (907)**	
	74HC238	**Signetics (907)**	
	74HCT138	**Signetics (907)**	
	74HCT238	**Signetics (907)**	175
	54HCT138	† Supertex	
	54HCT238	† Supertex	
	74HCT138	Supertex	
	74HCT238	Supertex	
	74SC138	Supertex	180
	74SC238	Supertex	
	SN54HC138	† TI	
	SN74HC138	TI	
	TC40H138	Toshiba	
	TC74HC138	Toshiba	185
	ZX54HCT138	† Zytrex	
	ZX54HCT238	† Zytrex	
	ZX74HCT138	Zytrex	
	ZX74HCT238	Zytrex	

† Military Temperature Range (−55° to 125°C)

* Typical Value

Bold face indicates additional data is provided on the page noted.

© IC MASTER 1984

DIGITAL-CMOS (Cont'd)

Decoders (Cont'd)

Function	Device	Source		Line
3-Line to 8-Line Decoder/Demultiplexer with Input Latches				
	G74SC137	GTEMicro		
	MD54SC137	† Mitel		
	MD74SC137	Mitel		
	MC54HC137	† Motorola		
	MC54HC237	† Motorola		5
	MC74HC137	Motorola		
	MC74HC237	Motorola		
	MV74SC137	Plessey		
	MV74SC237	Plessey		
	54HCT137	† Supertex		10
	54HCT237	† Supertex		
	74HCT137	Supertex		
	74HCT237	Supertex		
	74SC137	Supertex		
	74SC237	Supertex		15
	SN54HC137	† TI		
	SN74HC137	TI		
4-Bit Latch/4-to-16-Line Decoder (high)				
	F4514BC	Fairchild		
	F4514BM	† Fairchild		
	F4515BC	Fairchild		20
	F4515BM	† Fairchild		
	HD14514B	Hitachi		
	HD14515B	Hitachi		
	MC14514BA	† Motorola		
	MC14514BC	Motorola		25
	MC14515BA	† Motorola		
	MC14515BC	Motorola		
	MC54HC4514	† Motorola		
	MC74HC4514	Motorola		
	CD4514BC	National		30
	CD4514BM	† National		
	CD4515BC	National		
	CD4515BM	† National		
	MM54HC4514	† National		
	MM74HC4514	National		35
	CD4514B	**† RCA**	**(837)**	
	CD4514BE	**RCA**	**(837)**	
	CD4515B	† RCA		
	CD4515BE	RCA		
	CD54HC4514	**† RCA**	**(843)**	40
	CD54HC4515	**† RCA**	**(843)**	
	CD54HCT4514	† RCA		
	CD54HCT4515	† RCA		
	CD74HC4514	**RCA**	**(843)**	
	CD74HC4515	**RCA**	**(843)**	45
	CD74HCT4514	RCA		
	CD74HCT4515	RCA		
	HCC4514B	† SGS		
	HCC4515B	† SGS		
	HCF4514B	SGS		50
	HCF4515B	SGS		
	74HC4514	**Signetics**	**(908)**	
	74HC4515	**Signetics**	**(908)**	
	74HCT4514	**Signetics**	**(908)**	
	74HCT4515	**Signetics**	**(908)**	55
	HEF4514B	**Signetics**	**(864,898)**	
	HEF4514BD	**† Signetics**	**(864)**	
	HEF4515B	**Signetics**	**(864,898)**	
	HEF4515BD	**† Signetics**	**(864)**	
	883/4514B	SSS		60
	883/4515B	† SSS		
	SCL4514B	SSS		
	SCL4515B	SSS		
	CM4514B	Solitron		
	CM4514BE	Solitron		65
	CM4515B	† Solitron		
	CM4515BE	Solitron		

(Continued)

Function	Device	Source		Line
4-Bit Latch/4-to-16-Line Decoder (high) (Cont'd)				
	TC4514B	Toshiba		
	TC4515B	Toshiba		
4-Line-to-16-Line Decoder/Demultiplexer				
	54HC154	† Fairchild		70
	54HC4514	† Fairchild		
	74HC154	Fairchild		
	74HC4514	Fairchild		
	MC54HC154	† Motorola		
	MC74HC154	Motorola		75
	MM54C154	† National		
	MM54HC154	† National		
	MM74C154	National		
	MM74HC154	National		
	MM74HC154	**Panasonic**	**(830)**	80
	CD54HC154	**† RCA**	**(842)**	
	CD54HCT154	† RCA		
	CD74HC154	RCA		
	CD74HCT154	**RCA**	**(842)**	
	74HC154	**Signetics**	**(907)**	85
	74HCT154	**Signetics**	**(907)**	
	SN54HC154	† TI		
	SN74HC154	TI		
8 to 3-Line Priority Encoder				
	SP54HC148	**† SPI**	**(848)**	
	SP74HC148	**SPI**	**(848)**	90
	TC74HC148	Toshiba		
10-Line to 4-Line Priority Encoder				
	MC54HC147	† Motorola		
	MC74HC147	Motorola		
	CD54HC147	**† RCA**	**(842)**	
	CD54HCT147	† RCA		95
	CD74HC147	RCA		
	CD74HCT147	**RCA**	**(842)**	
	SP54HC147	**† SPI**	**(848)**	
	SP74HC147	**SPI**	**(848)**	
	74HC147	**Signetics**	**(907)**	100
	74HCT147	**Signetics**	**(907)**	

Drivers

Also See: Interface—Display Drivers, Memory and Peripheral Drivers

Function	Device	Source		Line
Bus, Bidirectional				
	HD6432-2	**† Harris**	**(1490)**	
	HD6432-9	**Harris**	**(1490)**	
Bus, Latching	**HD6431-2**	**† Harris**	**(1490)**	105
	HD6431-9	**Harris**	**(1490)**	
Bus Separator/Driver				
	HD6433-2	**† Harris**	**(1490)**	
	HD6433-9	**Harris**	**(1490)**	
Fluorescent Display, 4-Digit/8 Segment				
	COP470	National		
LCD, Dot Matrix				
	HLCD0488	Hughes		110
	HLCD0538A	Hughes		
	HLCD0539A	Hughes		
	HLCD0540	Hughes		
	HLCD0541	Hughes		
	HLCD0542	Hughes		115
	HLCD0548	Hughes		
	HLCD0550	Hughes		
	HLCD0551	Hughes		
	HLCD0607	Hughes		
LCD, BCD-to-7-Segment Decoder/Driver with "Display Frequency Output"				
	CD4055B	**† RCA**	**(839)**	120
	CD4055BE	**RCA**	**(839)**	
	HCC4055B	† SGS		
	HCF4055B	SGS		
	TC4055B	Toshiba		

Function	Device	Source		Line
LCD, BCD-to-7-Segment Decoder/Driver with Strobed-Latch Function				
	CD4056B	**† RCA**	**(839)**	125
	CD4056BE	**RCA**	**(839)**	
	HCC4056B	† SGS		
	HCF4056B	SGS		
	TC4056B	Toshiba		
LCD, BCD-to-7-Segment Latch/Decoder/Driver				
	HD14543B	Hitachi		130
	MC14543BA	† Motorola		
	MC14543BC	Motorola		
	MC54HC4543	† Motorola		
	MC74HC4543	Motorola		
	CD4543BC	National		135
	CD4543BM	† National		
	CD54HC4543	**† RCA**	**(843)**	
	CD54HCT4543	† RCA		
	CD74HC4543	**RCA**	**(843)**	
	CD74HCT4543	RCA		140
	74HC4543	**Signetics**	**(908)**	
	74HCT4543	**Signetics**	**(908)**	
	HEF4543B	**Signetics**	**(865,899)**	
	HEF4543BD	**† Signetics**	**(865)**	
	883/4543B	† SSS		145
	SCL4543B	SSS		
	TC4543B	Toshiba		
	TC74HC4543	Toshiba		
LCD, 4-Digit, Microprocessor Interface				
	ICM7211AM	**Intersil**	**(779)**	
	ICM7211M	**Intersil**	**(779)**	150
	CD22105	**RCA**	**(839)**	
	CD22105A	**RCA**	**(839)**	
LCD, 4-Digit Multiplex Input				
	HLCD0437	Hughes		
LCD, 4-Digit, Multiplexed BCD to LCD Decoder/Driver, AC Drive	**ICM7211**	**Intersil**	**(779)**	
	ICM7211A	**Intersil**	**(779)**	155
	CD22104	**RCA**	**(839)**	
	CD22104A	**RCA**	**(839)**	
LCD, 4-Digit Serial Input				
	HLCD0438A	Hughes		
LCD, 4-Line	**CD4054B**	**† RCA**	**(839)**	
	CD4054BE	**RCA**	**(839)**	160
	HCC4054B	† SGS		
	HCF4054B	SGS		
	TC4054B	Toshiba		
LED, 4-Digit Multiplexed BCD or Binary to 7-Segment Decoder/Driver				
	ICM7212	**Intersil**	**(779)**	
	ICM7212A	**Intersil**	**(779)**	165
LED, 4-Digit BCD or Binary to 7-Segment Decoder/Driver, Data and Digit Select Input Latches for μP Interface				
	ICM7212AM	**Intersil**	**(779)**	
	ICM7212M	**Intersil**	**(779)**	
LED, 4-Digit, 17-Segment Alphanumeric Display with Memory, Decoder				
	MM74C956	National		
BCD (hexadecimal) to 7-Segment Latch/Decoder/Driver				
	MC14495	Motorola		
BCD-to-7-Segment Latch/Decoder/Driver				
	F4511BC	Fairchild		170
	F4511BM	† Fairchild		
	F4734BC	† Fairchild		
	F4734BM	Fairchild		
	HD14511B	Hitachi		
	MC14511BA	† Motorola		175
	MC14511BC	Motorola		
	MC14513BA	† Motorola		
	MC14513BC	Motorola		
	MC54HC4511	† Motorola		
	MC74HC4511	Motorola		180

(Continued)

† Military Temperature Range (−55° to 125°C)

* Typical Value

Bold face indicates additional data is provided on the page noted.

DIGITAL–CMOS (Cont'd)

Drivers (Cont'd)

Function	Device	Source	Line
BCD-to-7-Segment Latch/Decoder/Driver (Cont'd)			
	CD4511BC	National	
	CD4511BM	† National	
	MM54HC4511	† National	
	MM54HC4543	† National	
	MM74HC4511	National	5
	MM74HC4543	National	
	MN4511B	† Panasonic	
	CD4511B	**† RCA (839)**	
	CD4511BE	**RCA (839)**	
	CD54HC4511	**† RCA (843)**	10
	CD54HCT4511	† RCA	
	CD74HC4511	**RCA (843)**	
	CD74HCT4511	RCA	
	HCC4511B	† SGS	
	HCF4511B	SGS	15
	74HC4511	**Signetics (908)**	
	74HCT4511	**Signetics (908)**	
	HEF4511B	**Signetics (864,898)**	
	HEF4511BD	**† Signetics (864)**	
	883/4511B	† SSS	20
	SCL4511B	SSS	
	CM4511B	† Solitron	
	CM4511BE	Solitron	
	TC4511B	Toshiba	
	TC5022B	Toshiba	25
	TC5068B	Toshiba	
	TC5069B	Toshiba	
	TC74HC4511	Toshiba	
Dual and Quad Line Drivers-See Miscellaneous			
Dual High Voltage, Source 250 mA			
	MM74C908	National	30
	MM74C918	National	
Hex Buffer/Driver, Three-State			
	HD6495-2	**† Harris (1491)**	
	HD6495-9	**Harris (1491)**	
One-of-Eight Decoder/Driver, Latched			
	HD6440-2	**† Harris (1491)**	
	HD6440-9	**Harris (1491)**	35
4-Digit Display (stores segment and address data, drives 7-8 segment digits)			
	MM74C911	National	
6-Digit BCD Display (stores segment and address data, drives 7-8 segment digits)			
	MM74C912	National	
6-Digit Hex Display (stores segment and address data, drives 7-segment digits)			
	MM74C917	National	
7-Segment to BCD Converter/Driver			
	MM54C915	† National	
	MM74C915	National	40

Flip-Flops, D-Type

Function	Device	Source	Line
Dual	54HC74	† Fairchild	
	74HC74	Fairchild	
	F4013BC	Fairchild	
	F4013BM	† Fairchild	
	HD14013B	Hitachi	45
	MC14013BA	† Motorola	
	MC14013BC	Motorola	
	MC54HC74	† Motorola	
	MC74HC74	Motorola	
	CD4013BC	National	50
	CD4013BM	† National	
	MM54C74	† National	
	MM54HC74	† National	
	MM74C74	National	
	MM74HC74	National	55
		(Continued)	
Dual		(Cont'd)	
	MM74PC74	National	
	MN4013B	**† Panasonic (828,834)**	
	MN74HC74	**Panasonic (830)**	
	CD4013A	**† RCA (838)**	
	CD4013AE	**RCA (838)**	60
	CD4013B	**† RCA (838)**	
	CD4013BE	**RCA (838)**	
	CD54HC74	**† RCA (842)**	
	CD54HCT74	† RCA	
	CD74HC74	RCA	65
	CD74HCT74	**RCA (842)**	
	LC4013B	Sanyo	
	SP54HC74	**† SPI (848)**	
	SP74HC74	**SPI (848)**	
	HCC4013B	† SGS	70
	HCF4013B	SGS	
	74HC74	**Signetics (907)**	
	74HCT74	**Signetics (907)**	
	HEF4013B	**Signetics (864,898)**	
	HEF4013BD	**† Signetics (864)**	75
	883/4013B	† SSS	
	SCL4013B	SSS	
	CM4013A	† Solitron	
	CM4013AE	Solitron	
	CM4013B	† Solitron	80
	CM4013BE	Solitron	
	SN54HC74	† TI	
	SN74HC74	TI	
	TC4013B	Toshiba	
	TC40H074	Toshiba	85
	TC74HC74	Toshiba	
	ZX54HCT74	† Zytrex	
	ZX74HCT74	Zytrex	
Quad Three-State			
	54HC173	† Fairchild	
	74HC173	Fairchild	90
	F4076BC	Fairchild	
	F4076BM	† Fairchild	
	HD14076B	Hitachi	
	MC14076BA	Motorola	
	MC14076BC	Motorola	95
	MC54HC173	† Motorola	
	MC74HC173	Motorola	
	CD4076BC	National	
	CD4076BM	† National	
	MM54C173	† National	100
	MM74C173	National	
	MN4076B	**† Panasonic (828,834)**	
	CD4076B	**† RCA (838)**	
	CD4076BE	**RCA (838)**	
	CD54HC173	**† RCA (842)**	105
	CD54HCT173	† RCA	
	CD74HC173	RCA	
	CD74HCT173	**RCA (842)**	
	SP54HC173	**† SPI (848)**	
	SP74HC173	**SPI (848)**	110
	HCC4076B	† SGS	
	HCF4076B	SGS	
	74HC173	**Signetics (907)**	
	74HCT173	**Signetics (907)**	
	HEF4076B	**Signetics (864,898)**	115
	HEF4076BD	**† Signetics (864)**	
	883/4076B	† SSS	
	SCL4076B	SSS	
	CM4076A	† Solitron	
	CM4076AE	Solitron	120
	SN54HC173	† TI	
	SN74HC173	TI	
		(Continued)	
Quad Three-State		(Cont'd)	
	TC4076B	Toshiba	
	TC74HC173	Toshiba	
Quad	54HC175	† Fairchild	125
	74HC175	Fairchild	
	F40175BC	Fairchild	
	F40175BM	† Fairchild	
	HD14175B	Hitachi	
	MC14175BA	† Motorola	130
	MC14175BC	Motorola	
	MC54HC175	† Motorola	
	MC74HC175	Motorola	
	CD40175B	National	
	MM54C175	† National	135
	MM54HC175	† National	
	MM74C175	National	
	MM74HC175	National	
	CD40175B	**† RCA (838)**	
	CD40175BE	**RCA (838)**	140
	CD54HC175	**† RCA (842)**	
	CD54HCT175	† RCA	
	CD74HC175	RCA	
	CD74HCT175	**RCA (842)**	
	SP74HC175	**SPI (848)**	145
	74HC175	**Signetics (907)**	
	74HCT175	**Signetics (907)**	
	HEF40175B	**Signetics (865,899)**	
	HEF40175BD	**† Signetics (865)**	
	SN54HC175	† TI	150
	SN74HC175	TI	
	TC40175B	Toshiba	
	TC40H175	Toshiba	
	TC74HC175	Toshiba	
Hex	F40174BC	Fairchild	155
	F40174BM	† Fairchild	
	HD14174B	Hitachi	
	MC14174BA	† Motorola	
	MC14174BC	Motorola	
	MC54HC174	† Motorola	160
	MC74HC174	† Motorola	
	CD40174BC	National	
	CD40174BM	† National	
	MM54C174	† National	
	MM74C174	National	165
	MN74HC174	**† Panasonic (831)**	
	CD40174B	**† RCA (838)**	
	CD40174BE	**RCA (838)**	
	CD54HC174	**† RCA (842)**	
	CD54HCT174	† RCA	170
	CD74HC174	† RCA	
	CD74HCT174	**RCA (842)**	
	SP54HC174	**† SPI (848)**	
	SP54HC175	**† SPI (848)**	
	SP74HC174	**SPI (848)**	175
	HCC40174B	† SGS	
	HCF40174B	SGS	
	74HC174	**† Signetics (907)**	
	74HCT174	**† Signetics (907)**	
	HEF40174B	**Signetics (865,899)**	180
	HEF40174BD	**† Signetics (865)**	
	883/4174B	† SSS	
	SCL4174B	SSS	
	SN54HC174	† TI	
	SN74HC174	TI	185
	TC40174B	Toshiba	
	TC40H174	Toshiba	
	TC74HC174	† Toshiba	
Octal Edge-Triggered with Clear			
	54HC273	† Fairchild	
	74HC273	Fairchild	190
	MC54HC273	† Motorola	
		(Continued)	

† Military Temperature Range (−55° to 125°C)

* Typical Value

Bold face indicates additional data is provided on the page noted.

© IC MASTER 1984

DIGITAL-CMOS (Cont'd)

Flip-Flops, D-Type (Cont'd)

Function	Device	Source	
Octal Edge-Triggered with Clear (Cont'd)			
	MC74HC273	Motorola	
	MN74HC273	**Panasonic**	**(831)**
	CD54HC273	**† RCA**	**(842)**
	CD54HCT273	† RCA	
	CD74HC273	RCA	
	CD74HCT273	**RCA**	**(842)**
	SP54HC273	**† SPI**	**(848)**
	SP74HC273	**SPI**	**(848)**
	74HC273	**Signetics**	**(907)**
	74HCT273	**Signetics**	**(907)**
	SN54HC273	† TI	
	SN74HC273	TI	
	TC40H273	Toshiba	
	TC74HC273	Toshiba	
	ZX54HCT273	† Zytrex	
	ZX74HCT273	Zytrex	
Octal, TTL Input, Three-State			
	MM54HC4304	† National	
	MM74HC4304	National	
Octal, TTL Input, Three-State, Inverting			
	MM54HC4303	† National	
	MM74HC4303	National	
Octal with Enable			
	CD54HC377	**† RCA**	**(842)**
	CD54HCT377	† RCA	
	CD74HC377	RCA	
	CD74HCT377	**RCA**	**(842)**
	74HC377	**Signetics**	**(908)**
	74HCT377	**Signetics**	**(908)**
Octal Three-State, Inverting			
	54HC534	† Fairchild	
	54HC564	† Fairchild	
	74HC534	Fairchild	
	74HC564	Fairchild	
	MC54HC534	† Motorola	
	MC54HC564	† Motorola	
	MC54HCT534	† Motorola	
	MC74HC534	Motorola	
	MC74HC564	Motorola	
	MC74HCT534	Motorola	
	MM54HC534	† National	
	MM54HC564	† National	
	MM74HC534	National	
	MM74HC564	National	
	CD54HC534	**† RCA**	**(843)**
	CD54HC564	**† RCA**	**(843)**
	CD54HCT534	† RCA	
	CD54HCT564	† RCA	
	CD74HC534	**RCA**	**(843)**
	CD74HC564	**RCA**	**(843)**
	CD74HCT534	RCA	
	CD74HCT564	RCA	
	SP74HC534	SPI	
	74HC534	**Signetics**	**(908)**
	74HC564	**Signetics**	**(908)**
	74HCT534	**Signetics**	**(908)**
	74HCT564	**Signetics**	**(908)**
	54HCT534	† Supertex	
	54HCT564	† Supertex	
	74HCT534	Supertex	
	74HCT56	Supertex	
	74SC534	Supertex	
	74SC564	Supertex	
	SN54HC534	† TI	
	SN74HC534	TI	
	TC74HC534	Toshiba	
	ZX54HCT534	† Zytrex	
	ZX54HCT564	† Zytrex	
	ZX74HCT534	Zytrex	
	ZX74HCT564	Zytrex	

Function	Device	Source	
Octal Three-State, Non-Inverting			
	54HC374	† Fairchild	
	54HC574	† Fairchild	
	74HC374	Fairchild	
	74HC574	Fairchild	
	G74SC374	GTEMicro	
	MD54HCT374R	**† Mitel**	**(3055)**
	MD54HCT574R	**† Mitel**	**(3059)**
	MD54SC374	† Mitel	
	MD54SC574	† Mitel	
	MD74HCT374R	**Mitel**	**(3055)**
	MD74HCT574R	**Mitel**	**(3059)**
	MD74SC374	Mitel	
	MD74SC574	Mitel	
	MC54HC374	† Motorola	
	MC54HC574	† Motorola	
	MC54HCT374	† Motorola	
	MC74HC374	Motorola	
	MC74HC574	Motorola	
	MC74HCT374	Motorola	
	MM54C374	† National	
	MM54HC374	† National	
	MM54HC574	† National	
	MM74C374	National	
	MM74HC374	National	
	MM74HC574	National	
	MN74HC374	**Panasonic**	**(831)**
	MV74SC374	Plessey	
	MV74SC574	Plessey	
	CD54HC374	**† RCA**	**(842)**
	CD54HC574	**† RCA**	**(843)**
	CD54HCT374	† RCA	
	CD54HCT574	† RCA	
	CD74HC374	RCA	
	CD74HC574	**RCA**	**(843)**
	CD74HCT374	**RCA**	**(842)**
	CD74HCT574	RCA	
	SP54HC374	**† SPI**	**(848)**
	SP54HC574	**† SPI**	**(848)**
	SP54SC374	† SPI	
	SP54SC574	† SPI	
	SP74HC374	**SPI**	**(848)**
	SP74HC574	**SPI**	**(848)**
	SP74HCT374	**SPI**	**(844)**
	SP74HCT574	**SPI**	**(844)**
	SP74SC374	SPI	
	SP74SC574	SPI	
	74HC374	**Signetics**	**(908)**
	74HC574	**Signetics**	**(908)**
	74HCT374	**Signetics**	**(908)**
	74HCT574	**Signetics**	**(908)**
	HEF40374B	**Signetics**	**(865,899)**
	54HCT374	† Supertex	
	54HCT574	† Supertex	
	74HCT374	Supertex	
	74HCT574	Supertex	
	74SC374	Supertex	
	74SC574	Supertex	
	SN54HC374	† TI	
	SN54HC574	† TI	
	SN74HC374	TI	
	SN74HC574	TI	
	TC40H374	Toshiba	
	TC74HC374	Toshiba	
	TC74HC574	Toshiba	
	TC74HCT574	Toshiba	
	ZX54HCT374	† Zytrex	
	ZX54HCT574	† Zytrex	
	ZX74HCT374	Zytrex	
	ZX74HCT574	Zytrex	

Flip-Flops, J-K Type

Function	Device	Source	
AND-Gated Master-Slave			
	CD4095B	**† RCA**	**(838)**
	CD4095BE	**RCA**	**(838)**
	CD4096B	**† RCA**	**(838)**
	CD4096BE	**RCA**	**(838)**
	HCF4095B	RCA	
	HCC4095B	† SGS	
	HCC4096B	† SGS	
	HCF4096B	SGS	
Dual Negative Edge-Triggered, Separate Preset and Clock			
	MC54HC113	† Motorola	
	MC74HC113	Motorola	
	SP54HC113	**† SPI**	**(848)**
	SP74HC113	**SPI**	**(848)**
	SN54HC113	† TI	
	SN74HC113	TI	
	ZX54HCT113	† Zytrex	
	ZX74HCT113	Zytrex	
Dual Negative Edge-Triggered with Preset and Clear			
	54HC112	† Fairchild	
	74HC112	Fairchild	
	MC54HC112	† Motorola	
	MC74HC112	Motorola	
	MM54HC112	† National	
	MM74HC112	National	
	MN74HC112	**Panasonic**	**(830)**
	CD54HC112	**† RCA**	**(842)**
	CD74HC112	RCA	
	CD74HCT112	**RCA**	**(842)**
	SP54HC112	**† SPI**	**(848)**
	SP74HC112	**SPI**	**(848)**
	74HC112	**Signetics**	**(907)**
	74HCT112	**Signetics**	**(907)**
	ZX54HCT112	† Zytrex	
	ZY74HCT112	Zytrex	
Dual w/o Preset			
	MC54HC107	† Motorola	
	MC54HC73	† Motorola	
	MC74HC107	Motorola	
	MC74HC73	Motorola	
	MM54C107	† National	
	MM54C73	† National	
	MM54HC107	† National	
	MM54HC73	† National	
	MM74C107	National	
	MM74C73	National	
	MM74HC107	National	
	MM74HC73	National	
	MN74HC107	**Panasonic**	**(830)**
	CD54HC107	**† RCA**	**(842)**
	CD54HC73	**† RCA**	**(842)**
	CD54HCT107	† RCA	
	CD54HCT73	† RCA	
	CD74HC107	RCA	
	CD74HC73	RCA	
	CD74HCT107	**RCA**	**(842)**
	CD74HCT73	**RCA**	**(842)**
	SP54HC107	**† SPI**	**(848)**
	SP54HC73	**† SPI**	**(848)**
	SP74HC107	**SPI**	**(848)**
	SP74HC73	**SPI**	**(848)**
	74HC107	**Signetics**	**(907)**
	74HC73	**Signetics**	**(907)**
	74HCT107	**Signetics**	**(907)**
	74HCT73	**Signetics**	**(907)**
	SN54HC107	† TI	
	SN54HC73	† TI	
	SN74HC107	TI	
	SN74HC73	TI	
	TC40H107	Toshiba	
	TC40H107A	Toshiba	

(Continued)

† Military Temperature Range (−55° to 125°C)

* Typical Value

Bold face indicates additional data is provided on the page noted.

DIGITAL-CMOS (Cont'd)

Flip-Flops, J-K Type (Cont'd)

Function	Device	Source	Line
Dual w/o Preset (Cont'd)			
	TC74HC107	Toshiba	
	ZX54HCT107	† Zytrex	
	ZX54HCT73	† Zytrex	
	ZX74HCT107	Zytrex	
	ZX74HCT73	Zytrex	5
Dual	54HC109	† Fairchild	
	54HC76	† Fairchild	
	74HC109	Fairchild	
	74HC76	Fairchild	
	F4027BC	Fairchild	10
	F4027BM	† Fairchild	
	HD14027B	Hitachi	
	MC14027BA	† Motorola	
	MC14027BC	Motorola	
	MC54HC109	† Motorola	15
	MC54HC76	† Motorola	
	MC74HC109	Motorola	
	MC74HC76	Motorola	
	CD4027BC	National	
	CD4027BM	† National	20
	MM54C76	† National	
	MM54HC109	† National	
	MM54HC76	† National	
	MM74C76	National	
	MM74HC109	National	25
	MM74HC76	National	
	MN4027B	**† Panasonic (828,834)**	
	MN74HC109	**Panasonic (830)**	
	MN74HC76	**Panasonic (830)**	
	CD4027A	**† RCA (838)**	30
	CD4027AE	**RCA (838)**	
	CD4027B	**† RCA (838)**	
	CD4027BE	**RCA (838)**	
	CD54HC109	**† RCA (842)**	
	CD54HCT109	† RCA	35
	CD74HC109	RCA	
	CD74HCT109	**RCA (842)**	
	SP54HC109	**† SPI (848)**	
	SP54HC76	**† SPI (848)**	
	SP74HC109	**SPI (848)**	40
	SP74HC76	**SPI (848)**	
	HCC4027B	† SGS	
	HCF4027B	SGS	
	74HC109	**Signetics (907)**	
	74HCT109	**Signetics (907)**	45
	HEF4027B	**Signetics (864,898)**	
	HEF4027BD	**† Signetics (864)**	
	883/4027B	† SSS	
	SCL4027B	SSS	
	CM4027A	† Solitron	50
	CM4027AE	Solitron	
	SN54HC109	† TI	
	SN54HC76	† TI	
	SN74HC109	TI	
	SN74HC76	TI	55
	TC4027B	Toshiba	
	TC40H076	Toshiba	
	TC40H076A	Toshiba	
	TC7476B	Toshiba	
	TC74HC112	Toshiba	60
	TC74HC76	Toshiba	
	ZX54HCT76	† Zytrex	
	ZX74HCT76	Zytrex	

Gates, AND

Function	Device	Source	Line
Dual 4-Input	F4082BC	Fairchild	
	F4082BM	† Fairchild	65
	HD14082B	Hitachi	
		(Continued)	
Dual 4-Input (Cont'd)			
	MC14082BA	† Motorola	
	MC14082BC	Motorola	
	CD4082BC	National	
	CD4082BM	† National	70
	CD4082B	**† RCA (837)**	
	CD4082BE	**RCA (837)**	
	HCC4082B	† SGS	
	HCF4082B	SGS	
	HEF4082B	**Signetics (864,898)**	75
	HEF4082BD	**Signetics (864)**	
	883/4082B	† SSS	
	SCL4082B	SSS	
	TC4082B	Toshiba	
	TC40H021	Toshiba	80
Triple 3-Input	F4073BC	Fairchild	
	F4073BM	† Fairchild	
	HD14073B	Hitachi	
	MC14073BA	† Motorola	
	MC14073BC	Motorola	85
	MC54HC11	† Motorola	
	MC74HC11	Motorola	
	CD4073BC	National	
	CD4073BM	† National	
	MM54HC11	† National	90
	MM74HC11	National	
	MN4073B	**† Panasonic (828,834)**	
	MN74HC11	**Panasonic (830)**	
	CD4073B	**† RCA (837)**	
	CD4073BE	**RCA (837)**	95
	CD54HC11	**† RCA (842)**	
	CD54HCT11	† RCA	
	CD74HC11	RCA	
	CD74HCT11	**RCA (842)**	
	SP54HC11	**† SPI (848)**	100
	SP74HC11	**SPI (848)**	
	HCC4073B	† SGS	
	HCF4073B	SGS	
	74HC11	**Signetics (907)**	
	74HCT11	**Signetics (907)**	105
	HEF4073B	**Signetics (864,898)**	
	HEF4073BD	**† Signetics (864)**	
	883/4073B	† SSS	
	SCL4073B	SSS	
	CM4073A	† Solitron	110
	CM4073AE	Solitron	
	SN54HC11	† TI	
	SN74HC11	TI	
	TC4073B	Toshiba	
	TC40H011	Toshiba	115
	TC74HC11	Toshiba	
Quad 2-Input	54HC08	† Fairchild	
	74HC08	Fairchild	
	F4081BC	Fairchild	
	F4081BM	† Fairchild	120
	HD14081B	Hitachi	
	MC14081BA	† Motorola	
	MC14081BC	Motorola	
	MC54HC08	† Motorola	
	MC74HC08	Motorola	125
	CD4081BC	National	
	CD4081BM	† National	
	MM54C08	† National	
	MM54HC08	† National	
	MM74C08	National	130
	MM74HC08	National	
	MM74PC08	National	
	MN4081B	**† Panasonic (828,834)**	
	MN74HC08	**Panasonic (830)**	
		(Continued)	
Quad 2-Input (Cont'd)			
	CD4081B	**† RCA (837)**	135
	CD4081BE	**RCA (837)**	
	CD54HC08	**† RCA (842)**	
	CD54HCT08	† RCA	
	CD74HC08	RCA	
	CD74HCT08	**RCA (842)**	140
	LC4081B	Sanyo	
	SP54HC08	**† SPI (848)**	
	SP74HC08	**SPI (848)**	
	HCC4081B	† SGS	
	HCF4081B	SGS	145
	74HC08	**Signetics (907)**	
	74HCT08	**Signetics (907)**	
	HEF4081B	**Signetics (864,898)**	
	HEF4081BD	**Signetics (864)**	
	883/4081B	† SSS	150
	SCL4081B	SSS	
	CM4081A	† Solitron	
	CM4081AE	Solitron	
	SN54HC08	† TI	
	SN74HC08	TI	155
	TC4081B	Toshiba	
	TC40H008	Toshiba	
	TC74HC08	Toshiba	
	ZX54HCT08	† Zytrex	
	ZX74HCT08	Zytrex	160

Gates, NAND

Function	Device	Source	Line
Dual 2-Input (Driver)			
	CD40107B	**† RCA (837)**	
	CD40107BE	**RCA (837)**	
	HCC40107B	† SGS	
	HCF40107B	SGS	
	TC40107	Toshiba	165
Dual 4-Input Expandable			
	883/4412B	† SSS	
	SCL4412B	SSS	
Dual 4-Input	54HC20	† Fairchild	
	74HC20	Fairchild	
	F4012BC	Fairchild	170
	F4012BM	† Fairchild	
	HD14012B	Hitachi	
	MC14012BA	† Motorola	
	MC14012BC	Motorola	
	MC14012UBA	† Motorola	175
	MC14012UBC	Motorola	
	MC54HC20	† Motorola	
	MC74HC20	Motorola	
	CD4012A	National	
	CD4012BC	National	180
	CD4012BM	† National	
	MM54C20	† National	
	MM74C20	National	
	MN4012B	**† Panasonic (828,834)**	
	MN74HC20	**Panasonic (830)**	185
	CD4012A	**† RCA (837)**	
	CD4012AE	**RCA (837)**	
	CD4012B	**† RCA (837)**	
	CD4012BE	**RCA (837)**	
	CD4012UB	**† RCA (837)**	190
	CD4012UBE	**RCA (837)**	
	CD54HC20	**† RCA (842)**	
	CD54HCT20	† RCA	
	CD74HC20	RCA	
	CD74HCT20	**RCA (842)**	195
	SP54HC20	**† SPI (848)**	
	SP74HC20	**SPI (848)**	
	HCC4012B	† SGS	
	HCF4012B	SGS	
		(Continued)	

† Military Temperature Range (−55° to 125°C)

* Typical Value

Bold face indicates additional data is provided on the page noted.

© IC MASTER 1984

DIGITAL-CMOS (Cont'd)

Gates, NAND (Cont'd)

Function	Device	Source	Line
Dual 4-Input		(Cont'd)	
	74HC20	**Signetics (907)**	
	74HCT20	**Signetics (907)**	
	HEF4012B	**Signetics (864,898)**	
	HEF4012BD	**† Signetics (864)**	
	883/4012B	† SSS	5
	SCL4012B	SSS	
	CM4012A	† Solitron	
	CM4012AE	Solitron	
	SN54HC20	† TI	
	SN74HC20	TI	10
	TC4012B	Toshiba	
	TC40H020	Toshiba	
	TC7420B	Toshiba	
	TC74HC20	Toshiba	
Triple 3-Input	54HC10	† Fairchild	15
	74HC10	Fairchild	
	F4023BC	Fairchild	
	F4023BM	† Fairchild	
	HD14023B	Hitachi	
	MC14023BA	† Motorola	20
	MC14023BC	Motorola	
	MC14023UBA	† Motorola	
	MC14023UBC	Motorola	
	MC54HC10	† Motorola	
	MC74HC10	Motorola	25
	CD4023BC	National	
	CD4023BM	† National	
	MM54C10	† National	
	MM54HC10	† National	
	MM54HC20	† National	30
	MM74C10	National	
	MM74HC10	National	
	MM74HC20	National	
	MN4023B	**† Panasonic (828,834)**	
	MN74HC10	**Panasonic (830)**	35
	CD4023A	**† RCA (837)**	
	CD4023AE	**RCA (837)**	
	CD4023B	**† RCA (837)**	
	CD4023BE	**RCA (837)**	
	CD4023UB	**† RCA (837)**	40
	CD4023UBE	**RCA (837)**	
	CD54HC10	**† RCA (842)**	
	CD54HCT10	† RCA	
	CD74HC10	RCA	
	CD74HCT10	**RCA (842)**	45
	SP54HC10	**† SPI (848)**	
	SP74HC10	**SPI (848)**	
	HCC4023B	† SGS	
	HCF4023B	SGS	
	74HC10	**Signetics (907)**	50
	74HCT10	**Signetics (907)**	
	HEF4023B	**Signetics (864,898)**	
	HEF4023BD	**† Signetics (864)**	
	883/4023B	† SSS	
	SCL4023B	SSS	55
	CM4023A	† Solitron	
	CM4023AE	Solitron	
	SN54HC10	† TI	
	SN74HC10	TI	
	TC4023B	Toshiba	60
	TC40H010	Toshiba	
	TC7410B	Toshiba	
	TC74HC10	Toshiba	
Quad 2-Input (open drain)			
	MC54HC03	† Motorola	
	MC74HC03	Motorola	65
	TC5029B	Toshiba	
Quad 2-Input	54HC00	† Fairchild	
	74HC00	Fairchild	
	F4011BC	Fairchild	
	F4011BM	† Fairchild	70
	HD14011B	Hitachi	
	MC14011BA	† Motorola	
	MC14011BC	Motorola	
	MC14011UBA	† Motorola	
	MC14011UBC	Motorola	75
	MC54HC00	† Motorola	
	MC54HCT00	† Motorola	
	MC74HC00	Motorola	
	MC74HCT00	Motorola	
	CD4011AC	National	80
	CD4011AM	† National	
	CD4011BC	National	
	CD4011BM	† National	
	MM54C00	† National	
	MM54HC00	† National	85
	MM74C00	National	
	MM74HC00	National	
	MM74PC00	National	
	MN4011B	**† Panasonic (828,834)**	
	CD4011A	**RCA (837)**	90
	CD4011AE	**RCA (837)**	
	CD4011B	**† RCA (837)**	
	CD4011BE	**RCA (837)**	
	CD4011UB	**† RCA (837)**	
	CD4011UBE	**RCA (837)**	95
	CD54HC00	**† RCA (842)**	
	CD54HCT00	† RCA	
	CD74HC00	RCA	
	CD74HCT00	**RCA (842)**	
	MN74HC00	RCA	100
	LC4011B	Sanyo	
	SP54HC00	**† SPI (848)**	
	SP74HC00	**SPI (848)**	
	HCC4011B	† SGS	
	HCF4011B	SGS	105
	74HC00	**Signetics (907)**	
	74HCT00	**Signetics (907)**	
	HEF4011B	**Signetics (864,898)**	
	HEF4011UB	**Signetics (864,898)**	
	883/4011B	† SSS	110
	883/4011UB	† SSS	
	SCL4011B	SSS	
	SCL4011UB	SSS	
	CM4011A	† Solitron	
	CM4011AE	Solitron	115
	CM4011B	† Solitron	
	CM4011BE	Solitron	
	SN54HC00	† TI	
	SN74HC00	TI	
	TC4011B	Toshiba	120
	TC4011UB	Toshiba	
	TC40H000	Toshiba	
	TC7400B	Toshiba	
	TC74HC00	Toshiba	
	ZX54HCT00	† Zytrex	125
	ZX74HCT00	Zytrex	
8-Input	54HC30	† Fairchild	
	74HC30	Fairchild	
	F4068BC	Fairchild	
	F4068BM	† Fairchild	130
	HD14068B	Hitachi	
	MC14068BA	† Motorola	
	MC14068BC	Motorola	
	MC54HC30	† Motorola	
	MC74HC30	Motorola	135
	MM54C30	† National	
		(Continued)	
8-Input		(Cont'd)	
	MM54HC30	† National	
	MM74C30	National	
	MM74HC30	National	
	MN74HC30	**Panasonic (830)**	140
	CD4068B	**† RCA (837)**	
	CD4068BE	**RCA (837)**	
	SP54HC30	**† SPI (848)**	
	SP74HC30	**SPI (848)**	
	HCC4068B	† SGS	145
	HCF4068B	SGS	
	HEF4068B	**Signetics (864,898)**	
	HEF4068BD	**† Signetics (864)**	
	883/4068B	† SSS	
	SCL4068B	SSS	150
	CM4068A	† Solitron	
	CM4068AE	Solitron	
	SN54HC30	† TI	
	SN74HC30	TI	
	TC4068B	Toshiba	155
	TC74HC30	Toshiba	
13-Input	54HC133	† Fairchild	
	74HC133	Fairchild	
	MC54HC133	† Motorola	
	MC74HC133	Motorola	160
	MM54HC133	† National	
	MM74HC133	National	
	MN74HC133	**Panasonic (830)**	
	SP54HC133	**† SPI (848)**	
	SP74HC133	**SPI (848)**	165
	SN54HC133	† TI	
	SN74HC133	TI	

Gates, AND-OR

Function	Device	Source	Line
Triple Bi-Phase Pairs			
	CD4037A	**† RCA (837)**	
	CD4037AE	**RCA (837)**	
	CM4037A	† Solitron	170
	CM4037AE	Solitron	
Quad Select	F4019BC	Fairchild	
	F4019BM	† Fairchild	
	HD14519B	Hitachi	
	CD4019BC	National	175
	CD4019BM	† National	
	CD4019A	**† RCA (837,839)**	
	CD4019AE	**RCA (837,839)**	
	CD4019B	**† RCA (837,839)**	
	CD4019BE	**RCA (837,839)**	180
	HCC4019B	† SGS	
	HCF4019B	SGS	
	HEF4019B	**Signetics (864,898)**	
	HEF409BD	† Signetics	
	883/4019B	† SSS	185
	SCL4019B	SSS	
	CM4019A	† Solitron	
	CM4019AE	Solitron	
	TC4019B	Toshiba	
2-Wide, 2-Input/2-Wide, 3-Input			
	MC54HC58	† Motorola	190
	MC74HC58	Motorola	
	MM54HC58	† National	
	MM74HC58	National	

Gates, AND-OR-Invert

Function	Device	Source	Line
Dual 2-Wide 2-Input			
	F4085BC	Fairchild	
	F4085BM	Fairchild	195
	HD14506B	Hitachi	
	MC14506BA	† Motorola	
	MC14506BC	Motorola	
		(Continued)	

† Military Temperature Range (−55° to 125°C)

* Typical Value

Bold face indicates additional data is provided on the page noted.

DIGITAL

Master Selection Guide

DIGITAL-CMOS (Cont'd)

Gates, AND-OR-Invert (Cont'd)

Function	Device	Source	Line
Dual 2-Wide 2-Input (Cont'd)			
	MN4085B	**† Panasonic (828,834)**	
	CD4085B	**† RCA (837)**	
	CD4085BE	**RCA (837)**	
	HCC4085B	† SGS	
	HCF4085B	SGS	5
	HEF4085B	**Signetics (864,898)**	
	HEF4085BD	**Signetics (864)**	
	883/4085B	† SSS	
	SCL4085B	SSS	
	TC4085B	Toshiba	10
	TC40H051	Toshiba	
2-Wide, 2-Input/2-Wide, 3-Input			
	MC54HC51	† Motorola	
	MC74HC51	Motorola	
	MM54HC51	† National	
	MM74HC51	National	15
	MN74HC51	**Panasonic (830)**	
	TC74HC51	Toshiba	
4-Wide 2-Input Expandable			
	F4086BC	Fairchild	
	F4086BM	† Fairchild	
	CD4086B	**† RCA (837)**	20
	CD4086BE	**RCA (837)**	
	HCC4086B	† SGS	
	HCF4086B	SGS	
	HEF4086B	**Signetics (864,898)**	
	HEF4086BD	**Signetics (864)**	25
	883/4086B	† SSS	
	SCL4086B	SSS	
	TC4086B	Toshiba	

Gates, OR

Function	Device	Source	Line
Dual 4-Input	F4072BC	Fairchild	
	F4072BM	† Fairchild	30
	HD14072B	Hitachi	
	MC14072BA	† Motorola	
	MC14072BC	Motorola	
	CD4072BC	National	
	CD4072BM	† National	35
	MN4072B	**† Panasonic (828,834)**	
	CD4072B	**† RCA (837)**	
	CD4072BE	**RCA (837)**	
	HCC4072B	† SGS	
	HCF4072B	SGS	40
	HEF4072B	**Signetics (864,898)**	
	HEF4072BD	**† Signetics (864)**	
	883/4072B	† SSS	
	SCL4072B	SSS	
	TC4072B	Toshiba	45
Triple 3-Input	F4075BC	Fairchild	
	F4075BM	† Fairchild	
	HD14075B	Hitachi	
	MC14075BA	† Motorola	
	MC14075BC	Motorola	50
	MC54HC4075	† Motorola	
	MC74HC4075	Motorola	
	CD4075BC	National	
	CD4075BM	† National	
	MM54HC266	† National	55
	MM74HC266	National	
	MN4075B	**† Panasonic (828,834)**	
	MN74HC4075	**Panasonic (831)**	
	CD4075B	**† RCA (837)**	
	CD4075BE	**RCA (837)**	60

(Continued)

Function	Device	Source	Line
Triple 3-Input (Cont'd)			
	CD54HC4075	**† RCA (843)**	
	CD54HCT4075	† RCA	
	CD74HC4075	**RCA (843)**	
	CD74HCT4075	RCA	
	HCC4075B	† SGS	65
	HCF4075B	SGS	
	74HC4075	**Signetics (908)**	
	74HCT4075	**Signetics (908)**	
	HEF4075B	**Signetics (864,898)**	
	HEF4075BD	**† Signetics (864)**	70
	883/4075B	† SSS	
	SCL4075B	SSS	
	SN54HC4075	† TI	
	SN74HC4075	TI	
	TC4075B	Toshiba	75
	TC74HC4075	Toshiba	
Quad 2-Input	54HC32	† Fairchild	
	74HC32	Fairchild	
	F4071BC	Fairchild	
	F4071BM	† Fairchild	80
	HD14071B	Hitachi	
	MC14071BA	† Motorola	
	MC14071BC	Motorola	
	MC54HC32	† Motorola	
	MC74HC32	Motorola	85
	CD4071BC	National	
	CD4071BM	† National	
	MM54C32	† National	
	MM54HC32	† National	
	MM74C32	National	90
	MM74HC32	National	
	MN4071B	**† Panasonic (828,834)**	
	MN74HC32	**Panasonic (830)**	
	CD4071B	**† RCA (837)**	
	CD4071BE	**RCA (837)**	95
	CD54HC32	**† RCA (842)**	
	CD54HCT32	† RCA	
	CD74HC32	RCA	
	CD74HCT32	**RCA (842)**	
	LC4071B	Sanyo	100
	SP54HC32	**† SPI (848)**	
	SP74HC32	**SPI (848)**	
	HCC4071B	† SGS	
	HCF4071B	SGS	
	74HC32	**Signetics (907)**	105
	74HCT32	**Signetics (907)**	
	HEF4071B	**Signetics (864,898)**	
	HEF4071BD	**† Signetics (864)**	
	883/4071B	† SSS	
	SCL4071B	SSS	110
	CM4071A	† Solitron	
	CM4071AE	Solitron	
	SN54HC32	† TI	
	SN74HC32	TI	
	TC4071B	Toshiba	115
	TC40H032	Toshiba	
	TC74HC32	Toshiba	
	ZX54HCT32	† Zytrex	
	ZX74HCT32	Zytrex	

Gates, NOR

Function	Device	Source	Line
Dual 3-Input plus Inverter			
	MC14000UBA	† Motorola	120
	MC14000UBC	Motorola	
	CD4000C	National	
	CD4000M	† National	
	CD4000A	**† RCA (837)**	
	CD4000AE	**RCA (837)**	125
	CD4000B	**RCA (837)**	

(Continued)

Function	Device	Source	Line
Dual 3-Input plus Inverter (Cont'd)			
	CD4000BE	**RCA (837)**	
	CD4000UB	**† RCA (837)**	
	CD4000UBE	**RCA (837)**	
	HCC4000B	† SGS	130
	HCF4000B	SGS	
	HEF4000B	**Signetics (864,898)**	
	HEF4000BD	**† Signetics (864)**	
	883/4000B	† SSS	
	SCL4000B	SSS	135
	CM4000A	Solitron	
	CM4000AE	Solitron	
	TC4000B	Toshiba	
Dual 4-Input	F4002BC	Fairchild	
	F4002BM	† Fairchild	140
	HD14002B	Hitachi	
	MC14002BA	† Motorola	
	MC14002BC	Motorola	
	MC14002UBA	† Motorola	
	MC14002UBC	Motorola	145
	MC54HC4002	† Motorola	
	MC74HC4002	Motorola	
	CD4002A	National	
	CD4002BC	National	
	CD4002BM	† National	150
	MM54HC4002	† National	
	MM74HC4002	National	
	MN4002B	**† Panasonic (828,834)**	
	MN74HC4002	**Panasonic (831)**	
	CD4002A	**† RCA (837)**	155
	CD4002AE	**RCA (837)**	
	CD4002B	**† RCA (837)**	
	CD4002BE	**RCA (837)**	
	CD4002UB	**† RCA (837)**	
	CD4002UBE	**RCA (837)**	160
	CD54HC4002	**† RCA (843)**	
	CD54HCT4002	† RCA	
	CD74HC4002	**RCA (843)**	
	CD74HCT4002	RCA	
	SP74HC4002	SPI	165
	HCC4002B	† SGS	
	HCF4002B	SGS	
	74HC4002	**Signetics (908)**	
	74HCT4002	**Signetics (908)**	
	HEF4002B	**Signetics (864,898)**	170
	HEF4002BD	**† Signetics (864)**	
	883/4002B	† SSS	
	SCL4002B	SSS	
	CM4002A	† Solitron	
	CM4002AE	Solitron	175
	TC4002B	Toshiba	
	TC74HC4002	Toshiba	
Triple 3-Input	54HC27	† Fairchild	
	74HC27	Fairchild	
	F4025BC	Fairchild	180
	F4025BM	† Fairchild	
	HD14025B	Hitachi	
	MC14025BA	† Motorola	
	MC14025BC	Motorola	
	MC14025UBA	† Motorola	185
	MC14025UBC	Motorola	
	MC54HC27	† Motorola	
	MC74HC27	Motorola	
	CD4025A	National	
	CD4025BC	National	190
	CD4025BM	† National	
	MM54HC27	† National	
	MM74HC27	National	
	MN4025B	**† Panasonic (828,834)**	

(Continued)

† Military Temperature Range (−55° to 125°C)

* Typical Value

Bold face indicates additional data is provided on the page noted.

© IC MASTER 1984

DIGITAL-CMOS (Cont'd)

Gates, NOR (Cont'd)

Function	Device	Source	Line
Triple 3-Input		(Cont'd)	
	MN74HC27	**Panasonic (830)**	
	CD4025A	**† RCA (837)**	
	CD4025AE	**RCA (837)**	
	CD4025B	**† RCA (837)**	
	CD4025BE	**RCA (837)**	5
	CD4025UB	**† RCA (837)**	
	CD4025UBE	**RCA (837)**	
	CD54HC27	**† RCA (842)**	
	CD54HCT27	† RCA	
	CD74HC27	RCA	10
	CD74HCT27	**RCA (842)**	
	SP54HC27	**† SPI (848)**	
	SP74HC27	**SPI (848)**	
	HCC4025B	† SGS	
	HCF4025B	SGS	15
	74HC27	**Signetics (907)**	
	74HCT27	**Signetics (907)**	
	HEF4025B	**Signetics (864,898)**	
	HEF4025BD	**† Signetics (864)**	
	883/4025B	† SSS	20
	SCL4025B	SSS	
	CM4025A	Solitron	
	CM4025AE	Solitron	
	SN54HC27	† TI	
	SN74HC27	TI	25
	TC4025B	Toshiba	
	TC40H027	Toshiba	
	TC74HC27	Toshiba	
Quad 2-Input	54HC02	† Fairchild	
	74HC02	Fairchild	30
	F4001BC	Fairchild	
	F4001BM	† Fairchild	
	HD14001B	Hitachi	
	MC14001BA	† Motorola	
	MC14001BC	Motorola	35
	MC14001UBA	† Motorola	
	MC14001UBC	Motorola	
	MC54HC02	† Motorola	
	MC74HC02	Motorola	
	CD4001A	National	40
	CD4001BC	National	
	CD4001BM	† National	
	MM54C02	† National	
	MM54HC02	† National	
	MM74C02	National	45
	MM74HC02	National	
	MM74PC02	National	
	MN4001B	**† Panasonic (828,834)**	
	MN74HC02	**Panasonic (830)**	
	CD4001A	**† RCA (837)**	50
	CD4001AE	**RCA (837)**	
	CD4001B	**† RCA (837)**	
	CD4001BE	**RCA (837)**	
	CD4001UB	**† RCA (837)**	
	CD4001UBE	**RCA (837)**	55
	CD54HC02	**† RCA (842)**	
	CD54HCT02	† RCA	
	CD74HC02	RCA	
	CD74HCT02	**RCA (842)**	
	LC4001B	Sanyo	60
	SP54HC02	**† SPI (848)**	
	SP74HC02	**SPI (848)**	
	HCC4001B	† SGS	
	HCF4001B	SGS	
	74HC02	**Signetics (907)**	65
	74HCT02	**Signetics (907)**	
	HEF4001B	**Signetics (864,898)**	
		(Continued)	

Function	Device	Source	Line
Quad 2-Input		(Cont'd)	
	HEF4001BD	**† Signetics (864)**	
	HEF4001UB	**Signetics (864,864,898)**	
	883/4001B	† SSS	70
	883/4001UB	† SSS	
	SCL4001B	SSS	
	SCL4001UB	SSS	
	CM4001A	† Solitron	
	CM4001AE	Solitron	75
	CM4001B	† Solitron	
	CM4001BE	Solitron	
	SN54HC02	† TI	
	SN74HC02	TI	
	TC4001B	Toshiba	80
	TC4001UB	Toshiba	
	TC40H002	Toshiba	
	TC74HC02	Toshiba	
	ZX54HCT02	† Zytrex	
	ZX74HCT02	Zytrex	85
8-Input	F4078BC	Fairchild	
	F4078BM	† Fairchild	
	HD14078B	Hitachi	
	MC14078BA	† Motorola	
	MC14078BC	Motorola	90
	MC54HC4078	† Motorola	
	MC74HC4078	Motorola	
	MM54HC4018	† National	
	MM74HC4018	National	
	MN4078B	**† Panasonic (828,834)**	95
	MN74HC4078	**Panasonic (831)**	
	CD4078B	**† RCA (837)**	
	CD4078BE	**RCA (837)**	
	HCC4078B	† SGS	
	HCF4078B	SGS	100
	HEF4078B	**Signetics (864,898)**	
	HEF4078BD	**Signetics (864)**	
	883/4078B	† SSS	
	SCL4078B	SSS	
	883/4402B	† Solitron	105
	CM4078A	† Solitron	
	CM4078AE	Solitron	
	SCL4402B	Solitron	
	TC4078B	Toshiba	
	TC74HC4078	Toshiba	110

Gates, Exclusive OR

Function	Device	Source	Line
Quad	54HC86	† Fairchild	
	74HC86	Fairchild	
	F4030BC	Fairchild	
	F4030BM	† Fairchild	
	F4070BC	Fairchild	115
	F4070BM	† Fairchild	
	HD14070B	Hitachi	
	MC14070BA	† Motorola	
	MC14070BC	Motorola	
	MC54HC86	† Motorola	120
	MC74HC86	Motorola	
	CD4030A	National	
	CD4070BC	National	
	CD4070BM	† National	
	CD4507BC	National	125
	CD4507BM	† National	
	MM54C86	† National	
	MM54HC86	† National	
	MM74C86	National	
	MM74HC86	National	130
	MN4030B	**† Panasonic (828,834)**	
	MN4070B	**† Panasonic (828,834)**	
		(Continued)	

Function	Device	Source	Line
Quad		(Cont'd)	
	MN74HC86	**Panasonic (830)**	
	CD4030A	**† RCA (837,840)**	
	CD4030AE	**RCA (837,840)**	135
	CD4030B	**† RCA (837,840)**	
	CD4030BE	**RCA (837,840)**	
	CD4070B	**† RCA (837,840)**	
	CD4070BE	**RCA (837,840)**	
	CD54HC86	**† RCA (842)**	140
	CD54HCT86	† RCA	
	CD74HC86	RCA	
	CD74HCT86	**RCA (842)**	
	SP54HC86	**† SPI (848)**	
	SP74HC86	**SPI (848)**	145
	HCC4030B	† SGS	
	HCC4070B	† SGS	
	HCF4030B	SGS	
	HCF4070B	SGS	
	74HC86	**Signetics (907)**	150
	74HCT86	**Signetics (907)**	
	HEF4030B	**Signetics (864,898)**	
	HEF4030BD	**† Signetics (864)**	
	HEF4070B	**Signetics (864,898)**	
	HEF4070BD	**† Signetics (864)**	155
	883/4030B	† SSS	
	883/4070B	† SSS	
	SCL4030B	SSS	
	SCL4070B	SSS	
	CM4030A	† Solitron	160
	CM4030AE	Solitron	
	CM4070A	† Solitron	
	CM4070AE	Solitron	
	SN54HC86	† TI	
	SN74HC86	TI	165
	TC4030B	Toshiba	
	TC40H386	Toshiba	
	TC74HC86	Toshiba	

Gates, Exclusive NOR

Function	Device	Source	Line
Quad	F4077BC	Fairchild	
	F4077BM	† Fairchild	170
	HD14077B	Hitachi	
	MC14077BA	† Motorola	
	MC14077BC	Motorola	
	MC54HC266	† Motorola	
	MC74HC266	Motorola	175
	MN74HC266	**Panasonic (831)**	
	CD4077B	**† RCA (837,840)**	
	CD4077BE	**RCA (837,840)**	
	SP54HC266	**† SPI (848)**	
	SP74HC266	**SPI (848)**	180
	HCC4077B	† SGS	
	HCF4077B	SGS	
	HEF4077B	**Signetics (864,898)**	
	HEF4077BD	**Signetics (864)**	
	883/4077B	† SSS	185
	SCL4077B	SSS	
	CM4077A	† Solitron	
	CM4077AE	Solitron	
	SN54HC266	† TI	
	SN74HC266	TI	190
	TC74HC266	Toshiba	

Gates, Miscellaneous

Function	Device	Source	Line
Dual 5-Input Majority Logic			
	HD14530B	Hitachi	
	MC14530BA	† Motorola	
	MC14530BC	Motorola	
	TC4530B	Toshiba	195

† Military Temperature Range (−55° to 125°C)

* Typical Value

Bold face indicates additional data is provided on the page noted.

DIGITAL-CMOS (Cont'd)

Gates, Miscellaneous (Cont'd)

Function	Device	Source	Line
Triple (dual 4-input NAND and 2-input OR/NOR)			
	HD14501UB	Hitachi	
	MC14501UBA	† Motorola	
	MC14501UBC	Motorola	
	TC4501B	Toshiba	
Hex Function (quad inverter plus 2-input NOR gate plus 2-input NAND gate)			
	HD14572UB	Hitachi	5
	MC14572A	† Motorola	
	MC14572C	Motorola	
	TC4572B	Toshiba	
8-Input Expandable Multifunction			
	CD4048BC	National	
	CD4048BM	† National	10
	CD4048A	**† RCA (837)**	
	CD4048AE	**RCA (837)**	
	CD4048B	**† RCA (837)**	
	CD4048BE	**RCA (837)**	
	HCC4048B	† SGS	15
	HCF4048B	SGS	
	883/4402B	† SSS	
	SCL4402B	SSS	
	CM4048A	† Solitron	
	CM4048AE	Solitron	20

Latches

Function	Device	Source	Line
Dual 4-Bit Addressable			
	F4723BC	Fairchild	
	F4723BM	† Fairchild	
	CD4723BC	National	
	CD4723BM	National	
Dual 4-Bit	HD14508B	Hitachi	25
	MC14508BA	† Motorola	
	MC14508BC	Motorola	
	MN1201	Panasonic	
	CD4508B	**† RCA (838)**	
	CD4508BE	**RCA (838)**	30
	HCC4508B	† SGS	
	HCF4058B	SGS	
	HEF4508B	**Signetics (864,898)**	
	HEF4508BD	**† Signetics (864)**	
	883/4508B	† SSS	35
	SCL4508B	SSS	
	CM4508	Solitron	
	SN54HC77	† TI	
	SN74HC77	TI	
	TC4508B	Toshiba	40
Quad, Bistable	MC74HC77	Motorola	
	SP54HC77	**† SPI (848)**	
	SP74HC77	**SPI (848)**	
	TC40H375	Toshiba	
Quad Clocked D			
	54HC75	† Fairchild	45
	74HC75	Fairchild	
	F4042BC	Fairchild	
	F4042BM	† Fairchild	
	HD14042B	Hitachi	
	MC14042BA	† Motorola	50
	MC14042BC	Motorola	
	MC54HC75	† Motorola	
	MC74HC75	Motorola	
	CD4042BC	National	
	CD4042BM	† National	55
	MM54HC75	† National	
	MM74HC75	National	
	MN74HC75	**Panasonic (830)**	
	CD4042A	**† RCA (838)**	
	CD4042AE	**RCA (838)**	60
	CD4042B	**† RCA (838)**	
		(Continued)	

Function	Device	Source	Line
Quad Clocked D		(Cont'd)	
	CD4042BE	**RCA (838)**	
	CD54HC75	**† RCA (842)**	
	CD54HCT75	† RCA	
	CD74HC75	RCA	65
	CD74HCT75	**RCA (842)**	
	SP54HC75	**† SPI (848)**	
	SP74HC75	**SPI (848)**	
	HCC4042B	† SGS	
	HCF4042B	SGS	70
	74HC75	**Signetics (907)**	
	74HCT75	**Signetics (907)**	
	HEF4042B	**Signetics (864,898)**	
	HEF4042BD	**† Signetics (864)**	
	883/4042B	† SSS	75
	SCL4042B	SSS	
	CM4042A	† Solitron	
	CM4042AE	Solitron	
	SN54HC75	† TI	
	SN74HC75	TI	80
	TC4042B	Toshiba	
Quad NAND R/S			
	F4044BC	Fairchild	
	F4044BM	† Fairchild	
	HD14044B	Hitachi	
	MC14044BA	† Motorola	85
	MC14044BC	Motorola	
	CD4044A	National	
	CD4044BC	National	
	CD4044BM	† National	
	CD4044A	**† RCA (838)**	90
	CD4044A/B	**† RCA (838)**	
	CD4044A/BE	**RCA (838)**	
	CD4044AE	**RCA (838)**	
	CD4044B	**RCA (838)**	
	HCC4044B	† SGS	95
	HCF4044B	SGS	
	HEF4044B	**Signetics (864,898)**	
	HEF4044BD	**† Signetics (864)**	
	883/4044B	† SSS	
	SCL4044B	SSS	100
	CM4044A	† Solitron	
	TC4044B	Toshiba	
Quad NOR R/S	F4043BC	Fairchild	
	F4043BM	† Fairchild	
	HD14043B	Hitachi	105
	MC14043BA	† Motorola	
	MC14043BC	Motorola	
	CD4043A	National	
	CD4043BC	National	
	CD4043BM	† National	110
	CD4043A	**† RCA (838)**	
	CD4043AE	**RCA (838)**	
	CD4043B	**† RCA (838)**	
	CD4043BE	**RCA (838)**	
	HCC4043B	† SGS	115
	HCF4043B	SGS	
	HEF4043B	**Signetics (864,898)**	
	HEF4043BD	**† Signetics (864)**	
	883/4043B	† SSS	
	SCL4043B	SSS	120
	CM4043A	† Solitron	
	CM4043AE	Solitron	
	TC4043B	Toshiba	
Octal Transparent, D-Type, Three State			
	54HC373	† Fairchild	
	54HC573	† Fairchild	125
	74HC373	Fairchild	
	74HC573	Fairchild	
	G74SC373	GTEMicro	
		(Continued)	

Function	Device	Source	Line
Octal Transparent, D-Type, Three State		(Cont'd)	
	MC74HCT373R	Mitel	
	MD54HCT373R	**† Mitel (3054)**	130
	MD54HCT573R	**† Mitel (3058)**	
	MD54SC373	† Mitel	
	MD54SC573	† Mitel	
	MD74HCT373R	**Mitel (3054)**	
	MD74HCT573R	**Mitel (3058)**	135
	MD74SC573	Mitel	
	MC54HC373	† Motorola	
	MC54HC573	† Motorola	
	MC54HCT373	† Motorola	
	MC74HC373	Motorola	140
	MC74HC573	Motorola	
	MC74HCT373	Motorola	
	MM54HC373	† National	
	MM54HC573	† National	
	MM74HC373	National	145
	MM74HC573	National	
	MN74HC373	**Panasonic (831)**	
	MV74SC573	Plessey	
	CD54HC373	**† RCA (842)**	
	CD54HC573	**† RCA (843)**	150
	CD54HCT373	† RCA	
	CD54HCT573	† RCA	
	CD74HC373	RCA	
	CD74HC573	**RCA (843)**	
	CD74HCT373	**RCA (842)**	155
	CD74HCT573	RCA	
	SP54HC373	**† SPI (848)**	
	SP54HC573	**† SPI (848)**	
	SP54SC373	† SPI	
	SP54SC573	† SPI	160
	SP74HC373	**SPI (848)**	
	SP74HC573	**SPI (848)**	
	SP74HCT373	**SPI (844)**	
	SP74HCT573	**SPI (844)**	
	SP74SC373	SPI	165
	SP74SC573	SPI	
	74HC373	**Signetics (908)**	
	74HC573	**Signetics (908)**	
	74HCT373	**Signetics (908)**	
	74HCT573	**Signetics (908)**	170
	HEF40373B	**Signetics (865,899)**	
	54HCT373	† Supertex	
	54HCT573	† Supertex	
	74HCT373	Supertex	
	74HCT573	Supertex	175
	74SC373	Supertex	
	74SC573	Supertex	
	SN54HC573	† TI	
	SN74HC573	TI	
	TC40H373	Toshiba	180
	TC74HC373	Toshiba	
	TC74HC573	Toshiba	
	TC74HCT573	Toshiba	
	ZX54HCT373	† Zytrex	
	ZX54HCT573	† Zytrex	185
	ZX74HCT373	Zytrex	
	ZX74HCT573	Zytrex	
Octal Transparent, Three-State, Inverted Output			
	54HC533	† Fairchild	
	54HC563	† Fairchild	
	74HC533	Fairchild	190
	74HC563	Fairchild	
	MD74SC373	Mitel	
	MC54HC533	† Motorola	
	MC54HC563	† Motorola	
	MC54HCT533	† Motorola	195
	MC74HC533	Motorola	
	MC74HC563	Motorola	
	MC74HCT533	Motorola	
		(Continued)	

† Military Temperature Range (−55° to 125°C)

* Typical Value

Bold face indicates additional data is provided on the page noted.

© IC MASTER 1984

DIGITAL–CMOS (Cont'd)

Latches (Cont'd)

Function	Device	Source		Line
Octal Transparent, Three-State, Inverted Output (Cont'd)				
	MM54HC533	† National		
	MM54HC563	† National		
	MM74HC533	National		
	MM74HC563	National		
	MV74SC533	Plessey		5
	MV74SC563	Plessey		
	CD54HC533	**† RCA**	**(843)**	
	CD54HC563	**† RCA**	**(843)**	
	CD54HCT533	† RCA		
	CD54HCT563	† RCA		10
	CD74HC533	**RCA**	**(843)**	
	CD74HC563	**RCA**	**(843)**	
	CD74HCT533	RCA		
	CD74HCT563	RCA		
	SP54HC533	**† SPI**	**(848)**	15
	SP74HC533	**SPI**	**(848)**	
	74HC533	**Signetics**	**(908)**	
	74HC563	**Signetics**	**(908)**	
	74HCT533	**Signetics**	**(908)**	
	74HCT563	**Signetics**	**(908)**	20
	54HCT533	† Supertex		
	54HCT563	† Supertex		
	74HCT533	Supertex		
	74HCT563	Supertex		
	74SC533	Supertex		25
	74SC563	Supertex		
	SN54HC533	† TI		
	SN54HC563	† TI		
	SN74HC533	TI		
	SN74HC563	TI		30
	TC74HC533	Toshiba		
	ZX54HCT533	† Zytrex		
	ZX54HCT563	† Zytrex		
	ZX74HCT533	Zytrex		
	ZX74HCT563	Zytrex		35
Octal, TTL Input, Three-State				
	MM54HC4302	† National		
	MM74HC4302	National		
Octal, TTL Input, Three-State, Inverting				
	MM54HC4301	† National		
	MM74HC4301	National		
8-Bit Addressable, Bidirectional Data Port (serial in/out and parallel out)				
	MC14599BA	† Motorola		40
	MC14599BC	Motorola		
8-Bit Addressable Input, Parallel Output, Three-State				
	MC14598BA	† Motorola		
	MC14598BC	Motorola		
8-Bit Addressable (serial in, parallel out)				
	54HC259	† Fairchild		
	74HC259	Fairchild		45
	F4724BC	Fairchild		
	F4724BM	† Fairchild		
	HD14099B	Hitachi		
	MC14099BA	† Motorola		
	MC14099BC	Motorola		50
	MC54HC259	† Motorola		
	MC74HC259	Motorola		
	CD4099BC	National		
	CD4099BM	† National		
	CD4724BC	National		55
	CD4724BM	† National		
	MM54HC259	† National		
	MM54HC77	† National		
	MM74HC259	National		
	MM74HC77	National		60
	CD4099B	**† RCA**	**(838)**	
	CD4099BE	**RCA**	**(838)**	
	CD4724B	**† RCA**	**(838)**	
			(Continued)	

Function	Device	Source		Line
8-Bit Addressable (serial in, parallel out) (Cont'd)				
	CD4724BE	**RCA**	**(838)**	
	CD54HC259	**† RCA**	**(842)**	65
	CD54HCT259	† RCA		
	CD74HC259	RCA		
	CD74HCT259	**RCA**	**(842)**	
	HCC4099B	† SGS		
	HCF4099B	SGS		70
	74HC259	**Signetics**	**(907)**	
	74HCT259	**Signetics**	**(907)**	
	HEF4724B	**Signetics**	~~(865,899)~~	
	HEF4724BD	**† Signetics**	**(865)**	
	883/4099B	† SSS		75
	SCL4099B	SSS		
	SN54HC259	† TI		
	SN74HC259	TI		
	TC4099B	Toshiba		
	TC40H259	Toshiba		80
	TC74HC259	Toshiba		
	ZX54HCT259	† Zytrex		
	ZX74HCT259	Zytrex		
8-Bit, Counter, Incremented Input, Parallel Output, Three-State	MC14597BA	† Motorola		
	MC14597BC	Motorola		85

Memories

For additional information see Master Selection Guide-Memory Sections.

Function	Device	Source		Line
4-Bit x 16 FIFO Register				
	CD54HC40105	**† RCA**	**(843)**	
	CD54HCT40105	† RCA		
	CD74HC40105	**RCA**	**(843)**	
	CD74HCT40105	RCA		90
	74HC40105	**Signetics**	**(908)**	
	74HCT40105	**Signetics**	**(908)**	
16-Bit FIFO (4x4)				
	CD40105B	**† RCA**	**(838)**	
	CD40105BE	**RCA**	**(838)**	
	HCC40105B	† SGS		95
	HCF40105B	SGS		
16-Bit Multiport Register File (4x4 read while write RAM)				
	HD14580B	Hitachi		
	MC14580BA	† Motorola		
	MC14580BC	Motorola		
	CD40108B	**† RCA**	**(838,840)**	100
	CD40108BE	**RCA**	**(838,840)**	
	CD40208B	**† RCA**	**(838,840)**	
	CD40208BE	**RCA**	**(838,840)**	
	HCC40208B	† SGS		
	HCF40208B	SGS		105
16-Bit (4x4) Register File				
	CD54HC670	**† RCA**	**(843)**	
	CD54HCT670	† RCA		
	CD74HC670	**RCA**	**(843)**	
	CD74HCT670	RCA		
	SP74HCT670	**SPI**	**(844)**	110
	SP74SC670	SPI		
	74HC670	**Signetics**	**(908)**	
	74HCT670	**Signetics**	**(908)**	
	TC74HC670	Toshiba		
32-Bit RAM (binary addressing)				
	CD4036A	† RCA		115
	CD4036AE	RCA		
	CM4036A	† Solitron		
	CM4036AE	† Solitron		
	TC4036B	Toshiba		
32-Bit RAM (direct word line addressing)				
	CD4039A	† RCA		120
	CD4039AE	RCA		
	CM4039A	† Solitron		
			(Continued)	

Function	Device	Source		Line
32-Bit RAM (direct word line addressing) (Cont'd)				
	CM4039AE	Solitron		
	TC4039B	Toshiba		
64-Bit FIFO (16x4)				
	F4703BC	Fairchild		125
	F4703BM	† Fairchild		
64-Bit Program Stack (16x4 LIFO)				
	F4706BC	Fairchild		
	F4706BM	† Fairchild		
64-Bit RAM (16x4)				
	F4725BC	Fairchild		
	F4725BM	† Fairchild		130
	MM54C89	† National		
	MM74C89	National		
	CD40114B	† RCA		
	CD40114BE	RCA		
64-Bit RAM (16x4 clocked RAM, three state output register)	F4710BC	Fairchild		135
	F4710BM	† Fairchild		
64-Bit RAM (64x1)				
	HD14505B	Hitachi		
	MCM14505A	† Motorola		
	MCM14505C	Motorola		
	HEF4505	**† Signetics**	**(864)**	140
	HEF4505B	**Signetics**	**(864,898)**	
256K Synchronous RAM Module				
	HM6641	**Harris**	**(3969)**	
256-Bit RAM (256x1)				
	F4720AC	Fairchild		
	F4720AM	† Fairchild		
	F4720C	Fairchild		145
	F4720M	† Fairchild		
	HD14537	Hitachi		
	MCM14537A	† Motorola		
	MCM14537C	Motorola		
	MM54C200	† National		150
	MM74C200	National		
	CD40061	RCA		
	CD40061A	† RCA		
	CD4061A	† RCA		
	HEF4720BV	**Signetics**	**(865,899)**	155
	HEF4720BVD	**† Signetics**	**(865,899)**	
	WD74HC200	Western		
256-Bit RAM (32x8)				
	HCMP1824	Hughes		
	HCMP1824C	Hughes		
	HMMP1824	† Hughes		160
	HMMP1824C	† Hughes		
	CDP1824	**† RCA**	**(1594)**	
	CDP1824C	**† RCA**	**(1594)**	
256-Bit RAM (64x4)				
	HD14552B	Hitachi		
	MCM14552A	† Motorola		165
	MCM14552C	Motorola		
	COP498	National		
	MM54C910	† National		
	MM74C910	National		
768-Bit RAM (64x12)				
	IM6512	Intersil		170
	IM6512M	† Intersil		
1024-Bit PROM (256x4)				
	HM6611	† Harris		
1024-Bit RAM (1024x1)				
	S23128	**AMI**	**(3935)**	
	S4264	AMI		
	S6504	AMI		175
	S6508	AMI		
			(Continued)	

† Military Temperature Range (−55° to 125°C)

* Typical Value

Bold face indicates additional data is provided on the page noted.

DIGITAL

Master Selection Guide

DIGITAL-CMOS (Cont'd)

Memories (Cont'd)

Function	Device	Source	Line
1024-Bit RAM (1024x1)		(Cont'd)	
	S6508A	AMI	
	S6516	AMI	
	S68B364	**AMI**	**(3933)**
	F4736BC	Fairchild	
	F4736BM	† Fairchild	5
	HM6508	**Harris**	**(3965)**
	HM6518	**Harris**	**(3965)**
	MCM6508	Motorola	
	MCM6518	Motorola	
	MM54C929	† National	10
	MM54C930	† National	
	MM74C929	National	
	MM74C930	National	
	NMC6508	National	
	NMC6516	National	15
	NMC6518	National	
	CDP1821	**RCA**	**(1594)**
	TC5508	Toshiba	
1024-Bit RAM (128x8)			
	HCMP1823C	Hughes	
	CDP1823	**RCA**	**(1594)** 20
1024-Bit RAM (256x4)			
	S5101L	AMI	
	F4721BC	Fairchild	
	F4721BM	Fairchild	
	HM6551	**Harris**	**(3965)**
	HM6561	**Harris**	**(3965)** 25
	HM435101	Hitachi	
	HCMP1822C	Hughes	
	HMMP1822C	† Hughes	
	MCM5101	Motorola	
	MM54C920	† National	30
	MM54C921	† National	
	MM74C920	National	
	MM74C921	National	
	NMC6551	National	
	NMC6552	National	35
	μPD5101L	NEC	
	CDP1822	**† RCA**	**(1594)**
	CDP1822C	**† RCA**	**(1594)**
	SCM5101	† SSS	
	TC5501	Toshiba	40
1024-Bit ROM (256x4)			
	HD14524B	Hitachi	
	MCM14524A	**† Motorola**	**(4048)**
	MCM14524C	**Motorola**	**(4048)**
4096-Bit RAM (1024x4)			
	μPD445L	NEC	

Multiplexers (Digital)

See also Interface—Analog Switches, Multiplexers 45

Function	Device	Source	Line
Dual 4-Channel, Three-State			
	54HC253	† Fairchild	
	74HC253	Fairchild	
	74HC253	**Signetics**	**(907)**
	74HCT253	**Signetics**	**(907)**
	TC74HC253	Toshiba	50
Dual 4-Channel	F4539BC	Fairchild	
	F4539BM	† Fairchild	
	HD14539B	Hitachi	
	MC14539BA	† Motorola	
	MC14539BC	Motorola	55
	MC54HC153	† Motorola	
	MC74HC153	Motorola	
	MN4539B	**Panasonic**	**(828,834)**
	SP54HC153	**† SPI**	**(848)**
	SP74HC153	**SPI**	**(848)** 60
			(Continued)

Function	Device	Source	Line
Dual 4-Channel		(Cont'd)	
	HEF4539B	**Signetics**	**(865,898)**
	HEF4539BD	**† Signetics**	**(865)**
	TC40H153	Toshiba	
	TC4539B	Toshiba	
Dual 4-Input, Three-State			
	MC54HC253	† Motorola	65
	MC74HC253	Motorola	
	MM54HC253	† National	
	MM74HC253	National	
	CD54HC253	**RCA**	**(842)**
	CD54HCT253	RCA	70
	CD74HC253	RCA	
	CD74HCT253	**RCA**	**(842)**
	SP54HC253	**† SPI**	**(848)**
	SP74HC253	**SPI**	**(848)**
Dual 4-Input	MM54HC153	† National	75
	MM74HC153	National	
	CD54HC153	**† RCA**	**(842)**
	CD54HCT153	† RCA	
	CD74HC153	RCA	
	CD74HCT153	**RCA**	**(842)** 80
Quad 2-Input Data Selector			
	MC54HC157	† Motorola	
	MC74HC157	Motorola	
	MM54C157	† National	
	MM54HC157	† National	
	MM54HC158	† National	85
	MM74C157	National	
	MM74HC157	National	
	MM74HC158	National	
	MN74HC157	**Panasonic**	**(830)**
	CD54HC157	**† RCA**	**(842)** 90
	CD54HCT157	† RCA	
	CD74HC157	RCA	
	CD74HCT157	**RCA**	**(842)**
	SP54HC157	**† SPI**	**(848)**
	SP74HC157	**SPI**	**(848)** 95
	74HC157	**Signetics**	**(907)**
	74HCT157	**Signetics**	**(907)**
	SN54HC157	† TI	
	SN74HC157	TI	
	TC40H157	Toshiba	100
	TC74HC157	Toshiba	
	ZX54HCT157	† Zytrex	
	ZX74HCT157	Zytrex	
Quad 2-Input Data Selector, Inverting			
	MC54HC158	† Motorola	
	MC74HC158	Motorola	105
	MN74HC158	**Panasonic**	**(830)**
	CD54HC158	**† RCA**	**(842)**
	CD54HCT158	† RCA	
	CD74HC158	RCA	
	CD74HCT158	**RCA**	**(842)** 110
	SP54HC158	**† SPI**	**(848)**
	SP74HC158	**SPI**	**(848)**
	74HC158	**Signetics**	**(907)**
	74HC160	**Signetics**	**(907)**
	74HCT158	**Signetics**	**(907)** 115
	74HCT160	**Signetics**	**(907)**
	SN54HC158	† TI	
	SN74HC158	TI	
	TC40H158	Toshiba	
	TC74HC158	Toshiba	120
	ZX54HCT158	† Zytrex	
	ZX74HCT158	Zytrex	
Quad 2-Input Data Selector, Three-State			
	54HC257	† Fairchild	
	74HC257	Fairchild	
	MC54HC257	† Motorola	125
	MC74HC257	Motorola	
			(Continued)

Function	Device	Source	Line
Quad 2-Input Data Selector, Three-State		(Cont'd)	
	MM54HC257	† National	
	MM74HC257	National	
	CD40257B	**† RCA**	**(839)**
	CD40257BE	**RCA**	**(839)** 130
	CD54HC257	**† RCA**	**(842)**
	CD54HCT257	† RCA	
	CD74HC257	RCA	
	CD74HCT257	**RCA**	**(842)**
	SP54HC257	**† SPI**	**(848)** 135
	SP74HC257	**SPI**	**(848)**
	HCC40257B	† SGS	
	HCF40257B	SGS	
	74HC257	**Signetics**	**(907)**
	74HCT257	**Signetics**	**(907)** 140
	TC74HC257	Toshiba	
	ZX54HCT257	† Zytrex	
	ZX74HCT257	Zytrex	
Quad 2-Input, Inverting, Three-State			
	SP54HC258	**† SPI**	**(848)**
	SP74HC258	**SPI**	**(848)** 145
	TC74HC258	Toshiba	
	ZX54HCT258	† Zytrex	
	ZX74HCT258	Zytrex	
Quad 2-Input, with Storage			
	MC54HC298	† Motorola	
	MC74HC298	Motorola	150
	SP54HC298	**† SPI**	**(848)**
	SP74HC298	**SPI**	**(848)**
4-Bit AND/OR Selector			
	F4519BC	Fairchild	
	F4519BM	† Fairchild	
	HD14519B	Hitachi	155
	MC14519BA	† Motorola	
	MC14519BC	Motorola	
	CD4519BC	National	
	CD4519BM	† National	
	HEF4519B	**Signetics**	**(864,898)** 160
	HEF4519BD	**† Signetics**	**(864)**
	TC4519B	Toshiba	
8-Channel	54HC151	† Fairchild	
	74HC151	Fairchild	
	MC54HC151	† Motorola	165
	MC74HC151	Motorola	
	MM54C151	† National	
	MM54HC151	† National	
	MM74C151	National	
	MM74HC151	National	170
	MN74HC151	**Panasonic**	**(830)**
	CD54HC151	**† RCA**	**(842)**
	CD54HCT151	† RCA	
	CD74HC151	RCA	
	CD74HCT151	**RCA**	**(842)** 175
	SP54HC151	**† SPI**	**(848)**
	SP74HC151	**SPI**	**(848)**
	74HC151	**Signetics**	**(907)**
	74HCT151	**Signetics**	**(907)**
	SN54HC151	† TI	180
	SN74HC151	TI	
	TC40H151	Toshiba	
	TC74HC151	Toshiba	
8-Channel Data Selector			
	F4512BC	Fairchild	
	F4512BM	† Fairchild	185
	HD14512B	Hitachi	
	MC14512A	† Motorola	
	MC14512C	Motorola	
	CD4512BC	National	
	CD4512BM	† National	190
	MN4512B	**† Panasonic**	**(828,834)**
			(Continued)

† Military Temperature Range (−55° to 125°C)

* Typical Value

Bold face indicates additional data is provided on the page noted.

© IC MASTER 1984

DIGITAL–CMOS (Cont'd)

Multiplexers (Digital) (Cont'd)

Function	Device	Source		Line
8-Channel Data Selector			(Cont'd)	
	CD4512B	**† RCA**	**(839)**	
	CD4512BE	**RCA**	**(839)**	
	HCC4512B	† SGS		
	HCF4512B	SGS		
	HEF4512B	**Signetics**	**(864,898)**	5
	HEF4512BD	**† Signetics**	**(864)**	
	883/4512B	† SSS		
	SCL4512B	SSS		
	TC4512B	Toshiba		
8-Channel Differential Multiplexer/Demultiplexer				
	MC14067BA	† Motorola		10
	MC14067BC	Motorola		
8-Channel, Three State				
	MM54HC251	† National		
	MM74HC251	National		
8-Channel, Three-State				
	54HC153	† Fairchild		
	54HC251	† Fairchild		15
	54HC4512	† Fairchild		
	74HC153	Fairchild		
	74HC251	Fairchild		
	74HC4512	Fairchild		
	74HC153	**Signetics**	**(907)**	20
	74HC251	**Signetics**	**(907)**	
	74HCT153	**Signetics**	**(907)**	
	74HCT251	**Signetics**	**(907)**	
	TC74HC153	Toshiba		
	TC74HC251	Toshiba		25
8-Input with Latch, Three-State				
	MM54HC354	† National		
	MM54HC356	† National		
	MM74HC354	National		
	MM74HC356	National		
8-Input, Three-State				
	MC54HC251	† Motorola		30
	MC54HC354	† Motorola		
	MC54HC356	† Motorola		
	MC74HC251	Motorola		
	MC74HC354	Motorola		
	MC74HC356	Motorola		35
	CD54HC251	**† RCA**	**(842)**	
	CD54HC354	**† RCA**	**(842)**	
	CD54HC356	**† RCA**	**(842)**	
	CD54HCT251	† RCA		
	CD54HCT354	† RCA		40
	CD54HCT356	† RCA		
	CD74HC251	RCA		
	CD74HC354	RCA		
	CD74HC356	RCA		
	CD74HCT251	**RCA**	**(842)**	45
	CD74HCT354	**RCA**	**(842)**	
	CD74HCT356	**RCA**	**(842)**	
	SP54HC251	**† SPI**	**(848)**	
	SP74HC251	**SPI**	**(848)**	
	74HC354	**Signetics**	**(907)**	50
	74HC356	**Signetics**	**(907)**	
	74HCT354	**Signetics**	**(907)**	
	74HCT356	**Signetics**	**(907)**	
	TC74HC354	Toshiba		
	TC74HC356	Toshiba		55
10-Line to 4-Line Priority Encoder				
	54HC147	Fairchild		
	74HC147	Fairchild		
	MM54HC147	National		
	MM74HC147	National		

Function	Device	Source		Line
10-Line to 4-Line BCD Priority Encoder				
	54HC147	† Fairchild		60
	74HC147	Fairchild		
	MM54HC147	† National		
	MM74HC147	National		
16-Channel	MM54C150	† National		
	MM74C150	National		65
	TP4320A	TI		
16-Channel Multiplexer/Demultiplexer				
	MC14097BA	† Motorola		
	MC14097BC	Motorola		
16-Channel, Three-State				
	MM72C19	† National		
	MM82C19	National		70

Multivibrators

Function	Device	Source		Line
Monostable/Astable, Retriggerable				
	54HC4046	† Fairchild		
	54HC4047	† Fairchild		
	74HC4046	Fairchild		
	74HC4047	Fairchild		
	F4047BC	Fairchild		75
	F4047BM	† Fairchild		
	CD4047BC	National		
	CD4047BM	† National		
	CD4047A	**† RCA**	**(838)**	
	CD4047AE	**RCA**	**(838)**	80
	CD4047B	**† RCA**	**(838)**	
	CD4047BE	**RCA**	**(838)**	
	HCC4047B	† SGS		
	HCF4047B	SGS		
	HEF4047B	**Signetics**	**(864,898)**	85
	HEF4047BD	**† Signetics**	**(864)**	
	883/4047B	† SSS		
	SCL4047B	SSS		
	CM4047A	† Solitron		
	CM4047AE	Solitron		90
	TC4047B	Toshiba		
Dual Monostable, Retriggerable				
	F4528BC	Fairchild		
	F4528BM	† Fairchild		
	HD14528B	Hitachi		
	MC14528BA	† Motorola		95
	MC14528BC	Motorola		
	MC54HC123	† Motorola		
	MC74HC123	Motorola		
	CD4528BC	National		
	CD4528BM	† National		100
	MM54HC123	† National		
	MM74HC123	National		
	MM74HC123	**Panasonic**	**(830)**	
	CD4098B	**† RCA**	**(838)**	
	CD4098BE	**RCA**	**(838)**	105
	CD54HC123	**† RCA**	**(842)**	
	CD54HCT123	† RCA		
	CD74HC123	RCA		
	CD74HCT123	**RCA**	**(842)**	
	HCC4098B	† SGS		110
	HCF4098B	SGS		
	74HC123	**Signetics**	**(907)**	
	74HCT123	**Signetics**	**(907)**	
	HEF4528B	**Signetics**	**(864,898)**	
	HEF4528BD	**† Signetics**	**(864)**	115
	883/4528B	† SSS		
	SCL4528B	SSS		
	TC4528B	Toshiba		
Dual Monostable				
	54HC221	† Fairchild		
	54HC4538	† Fairchild		120
	74HC221	Fairchild		

(Continued)

Function	Device	Source		Line
Dual Monostable			(Cont'd)	
	74HC4538	Fairchild		
	HD14538B	Hitachi		
	MC14538BA	† Motorola		
	MC14538BC	Motorola		125
	MC54HC221	† Motorola		
	MC54HC423	† Motorola		
	MC54HC4538	† Motorola		
	MC74HC221	Motorola		
	MC74HC423	Motorola		130
	MC74HC4538	Motorola		
	CD4538BC	National		
	CD4538BM	† National		
	MM54C221	† National		
	MM74C221	National		135
	MN4528B	**Panasonic**	**(828)**	
	MN4538B	Panasonic		
	MN74HC221	**Panasonic**	**(831)**	
	CD4538B	**† RCA**	**(838)**	
	CD4538BE	**RCA**	**(838)**	140
	CD54HC221	**† RCA**	**(842)**	
	CD54HC423	**† RCA**	**(843)**	
	CD54HC4538	**† RCA**	**(843)**	
	CD54HCT221	† RCA		
	CD54HCT423	† RCA		145
	CD54HCT4538	† RCA		
	CD74HC221	RCA		
	CD74HC423	**RCA**	**(843)**	
	CD74HC4538	**RCA**	**(843)**	
	CD74HCT221	**RCA**	**(842)**	150
	CD74HCT423	RCA		
	CD74HCT4538	RCA		
	74HC221	**Signetics**	**(907)**	
	74HC423	**Signetics**	**(908)**	
	74HC4538	**Signetics**	**(908)**	155
	74HCT221	**Signetics**	**(907)**	
	74HCT423	**Signetics**	**(908)**	
	74HCT4538	**Signetics**	**(908)**	
	HEF4538B	**Signetics**	**(865,898)**	
	HEF4538BD	**† Signetics**	**(865)**	160
	SN54HC221	† TI		
	SN54HC423	† TI		
	SN74HC221	TI		
	SN74HC423	TI		
	TC4538B	Toshiba		165
	TC74HC221	Toshiba		
	TC74HC4538	Toshiba		

Oscillators/Dividers

Function	Device	Source		Line
Divider, Divide by 5/6				
	RED5/6	**LSIComp**	**(803)**	
Divider, Divide by 6				
	D6	LSIComp		
Divider, Divide by 50/60				
	RED50/60	**LSIComp**	**(803)**	170
Divider, Divide by 60				
	D60	LSIComp		
Divider, Divide by 100/120				
	RED100/120	**LSIComp**	**(803)**	
Divider, Divide by 300/360				
	RED300/360	**LSIComp**	**(803)**	
Divider, Divide by 3000/3600				
	RED3000/3600	**LSIComp**	**(803)**	
Divider, Divide by 3600				
	D3600	LSIComp		175
Oscillator/Divider (programmable timer)				
	HD14541B	Hitachi		
	MC14541BA	† Motorola		
	MC14541BC	Motorola		
	CD4541B	**† RCA**	**(839)**	

(Continued)

† Military Temperature Range (−55° to 125°C)

* Typical Value

Bold face indicates additional data is provided on the page noted.

DIGITAL-CMOS (Cont'd)

Oscillators/Dividers (Cont'd)

Function	Device	Source	
Oscillator/Divider (programmable timer) (Cont'd)			
	CD4541BE	**RCA**	**(839)**
	HEF4541B	**Signetics**	**(865,899)**
	HEF4541BD	**† Signetics**	**(865)**
Oscillator/2^6 to 2^{24} Divider (programmable timer)			
	HD14536B	Hitachi	
	MC14536BA	† Motorola	
	MC14536BC	Motorola	
	CD4536B	**† RCA**	**(839)**
	CD4536BE	**RCA**	**(839)**
Oscillator/2^8 Divider (2-5 V supplies)			
	ICM7209	**Intersil**	**(3015)**
Oscillator/2^8, 2310, Divider (10 V supply)			
	TC5082L	Toshiba	
Oscillator/2^8, 2310, 2311, and 2^{12} Divider (10 V supply)			
	TC5082	Toshiba	
Oscillator/2^{12} and 2^{17} Divider, also 2^{17}x10 (0.01 and 0.1 output, 6.4 MHz crystal, 3-5 V supply)			
	ICM7207	Intersil	
Oscillator/2^{12} and 2^{20} Divider, also 2^{20}x10 (0.1 and 1 second output with 5.2 MHz crystal, 5 V supply)			
	ICM7207A	Intersil	
Oscillator/2^{12}, 2^{16}, 2^{21}, and 2^{17} Divider (also 2^{21}x60, 2-5 V supplies)	**ICM7213**	**Intersil**	**(780)**
Oscillator/23^{16} Divider/Buffer			
	ICM7051A	Intersil	
	SCL5411	SSS	
Oscillator/23^{16} Divider with 23^{13} Output (supply 1-2 V 7038B, 2-5 V 7038A)			
	ICM7038A	Intersil	
	ICM7038B	Intersil	
Oscillator/2^{17} Divider with 23^{13} Output (supply 1-2 V 7038D, 2-5 V 7038C)			
	ICM7038C	Intersil	
	ICM7038D	Intersil	
Oscillator/2^{17} Divider (2.5-6 V supplies)			
	MM53107	National	
Oscillator/2^{18} Divider with 23^{13} Output (supply 1-2 V 7038E, 2-5 V 7038F)			
	ICM7038E	Intersil	
	ICM7038F	Intersil	
Oscillator/2^{19} Divider with 23^{13} Output (supply 1-2 V 7038G, 2-5 V 7038H)			
	ICM7038G	Intersil	
Oscillator/2^{21} Divider/Buffer			
	CD4045A	**† RCA**	**(839)**
	CD4045AE	**RCA**	**(839)**
	CD4045B	**† RCA**	**(839)**
	CD4045BE	**RCA**	**(839)**
	HCC4045B	† SGS	
	HCF4045B	SGS	
	883/4445B	† SSS	
	SCL4445B	SSS	
	CM4045A	† Solitron	
	CM4045AE	Solitron	
Oscillator/2^{22} Divider			
	ICM7049A	Intersil	
Oscillator/2^{23} Divider			
	ICM7050	Intersil	
	ICM7051B	Intersil	
	ICM7052	Intersil	
	SCL5419	SSS	
Oscillator/2^{24} Divider			
	HD14521B	Hitachi	
	MC14521BA	† Motorola	
	MC14521BC	Motorola	
			(Continued)

Function	Device	Source	
Oscillator/2^{24} Divider (Cont'd)			
	HEF4521B	**Signetics**	**(864,898)**
	HEF4521BD	**† Signetics**	**(864)**
	TC4521B	Toshiba	
Oscillator/32768 Hz Divider			
	MM5368	National	
	MM5369	National	
See also CMOS-Counters			

Shift Registers

Function	Device	Source	
Dual 4-Bit Serial In/Parallel Out			
	F4015BC	Fairchild	
	F4015BM	Fairchild	
	HD14015B	Hitachi	
	MC14015BA	Motorola	
	MC14015BC	Motorola	
	CD4015AC	National	
	CD4015BC	National	
	CD4015BM	National	
	MN4015B	**Panasonic**	**(828)**
	CD4015A	**RCA**	**(838)**
	CD4015AE	**RCA**	**(838)**
	CD4015B	**RCA**	**(838)**
	CD4015BE	**RCA**	**(838)**
	CD54HC4015	**† RCA**	**(843)**
	CD54HCT4015	† RCA	
	CD74HC4015	**RCA**	**(843)**
	CD74HCT4015	RCA	
	HCC4015B	SGS	
	HCF4015B	SGS	
	74HC4015	**Signetics**	**(908)**
	74HCT4015	**Signetics**	**(908)**
	HEF4015B	**Signetics**	**(864,898)**
	HEF4015BD	**† Signetics**	**(864)**
	883/4015B	SSS	
	SCL4015B	SSS	
	CM4015A	Solitron	
	CM4015AE	Solitron	
	TC4015B	Toshiba	
Dual 16-Bit Static			
	HSSR0321	† Hughes	
	HSSR0351	† Hughes	
Dual 50/64-Bit Static			
	TC5000	Toshiba	
Dual 64-Bit Static			
	HD14517B	Hitachi	
	MC14517BA	† Motorola	
	MC14517BC	Motorola	
	CD4517B	**† RCA**	**(838)**
	CD4517BE	**RCA**	**(838)**
	HEF4517B	**Signetics**	**(864,898)**
	HEF4517BD	**† Signetics**	**(864)**
	883/4517B	† SSS	
	SCL4517B	SSS	
	TC5050	Toshiba	
Dual 512-Bit Dynamic			
	TC5004	Toshiba	
Quad 64-Bit Static, Separate Clock			
	F4731BC	Fairchild	
	F4731BM	† Fairchild	
	HEF4731BV	**Signetics**	**(865,899)**
	HEF4731BVD	**† Signetics**	**(865,899)**
4-Bit Bidirectional			
	F40194BC	Fairchild	
	F40194BM	† Fairchild	
	HD14194B	Hitachi	
	MC14194BA	† Motorola	
			(Continued)

Function	Device	Source	
4-Bit Bidirectional (Cont'd)			
	MC14194BC	Motorola	
	MC54HC194	† Motorola	
	MC74HC194	Motorola	
	MM54C95	National	
	MM54HC194	† National	
	MM74C95	† National	
	MM74HC194	National	
	CD54HC194	**† RCA**	**(842)**
	CD54HCT194	† RCA	
	CD74HC194	RCA	
	CD74HCT194	**RCA**	**(842)**
	SP74HC194	SPI	
	HCC40194B	† SGS	
	HCF40194B	SGS	
	74HC194	**Signetics**	**(907)**
	74HCT194	**Signetics**	**(907)**
	SN54HC194	† TI	
	SN74HC194	TI	
	TC40194B	Toshiba	
	TC74HC194	Toshiba	
4-Bit Bidirectional Universal, Three State			
	CD54HC40104	**† RCA**	**(843)**
	CD54HCT40104	† RCA	
	CD74HC40104	**RCA**	**(843)**
	CD74HCT40104	RCA	
	74HC40104	Signetics	
	74HCT40104	Signetics	
4-Bit Parallel	54HC195	† Fairchild	
	74HC195	Fairchild	
	F40195BC	Fairchild	
	F40195BM	† Fairchild	
	MC54HC195	† Motorola	
	MC74HC195	Motorola	
	CD40195BC	National	
	CD40195BM	† National	
	MM54C195	† National	
	MM54HC195	† National	
	MM74C195	National	
	MM74HC195	National	
	CD54HC195	**† RCA**	**(842)**
	CD54HCT195	† RCA	
	CD74HC195	RCA	
	CD74HCT195	**RCA**	**(842)**
	SP74HC195	SPI	
	74HC195	**Signetics**	**(907)**
	74HCT195	**Signetics**	**(907)**
	HEF40195B	**Signetics**	**(865,899)**
	HEF40195BD	**† Signetics**	**(865)**
	SN54HC195	† TI	
	SN74HC195	TI	
	TC74HC195	Toshiba	
4-Bit Parallel In/Parallel Out			
	F4035BC	Fairchild	
	F4035BM	† Fairchild	
	HD14035B	Hitachi	
	MC14035BA	† Motorola	
	MC14035BC	Motorola	
	CD4035BC	National	
	CD4035BM	† National	
	MN4035B	**† Panasonic**	**(828)**
	CD40104B	**RCA**	**(838)**
	CD40194B	**RCA**	**(838)**
	CD4035A	**† RCA**	**(838)**
	CD4035AE	**RCA**	**(838)**
	CD4035B	**† RCA**	**(838)**
	CD4035BE	**RCA**	**(838)**
	HCC40104B	† SGS	
	HCC4035B	† SGS	
	HCF40104B	SGS	
	HCF4035B	SGS	
			(Continued)

† Military Temperature Range (−55° to 125°C)

* Typical Value

Bold face indicates additional data is provided on the page noted.

© IC MASTER 1984

DIGITAL-CMOS (Cont'd)

Shift Registers (Cont'd)

Function	Device	Source	Line
4-Bit Parallel In/Parallel Out (Cont'd)			
	HEF40194B	**Signetics (865,899)**	
	HEF40194BD	**† Signetics (865)**	
	HEF4035B	**Signetics (864,898)**	
	HEF4035BD	**† Signetics (864)**	
	883/4035B	† SSS	5
	SCL4035B	SSS	
	CM4035A	† Solitron	
	CM4035AE	Solitron	
	TC40104B	Toshiba	
	TC4035B	Toshiba	10
8-Bit (asynchronous parallel or synchronous serial operation) Parallel In/Serial Out			
	F4021BC	Fairchild	
	F4021BM	† Fairchild	
	HD14021B	Hitachi	
	MC14021BA	† Motorola	
	MC14021BC	Motorola	15
	CD4021A	National	
	CD4021BC	National	
	CD4021BM	† National	
	CD4021A	**† RCA (838)**	
	CD4021AE	**RCA (838)**	20
	CD4021B	**† RCA (838)**	
	CD4021BE	**RCA (838)**	
	HCC4021B	† SGS	
	HCF4021B	SGS	
	HEF4021B	**Signetics (864,898)**	25
	HEF4021BD	**† Signetics (864)**	
	883/4021B	† SSS	
	SCL4021B	SSS	
	CM4021A	† Solitron	
	CM4021AE	Solitron	30
	TC4021B	Toshiba	
8-Bit Bidirectional Parallel/Serial Input/Output Bus Register	F4034BC	Fairchild	
	F4034BM	† Fairchild	
	HD14034B	Hitachi	
	MC14034BA	† Motorola	35
	MC14034BC	Motorola	
	CD4034BC	National	
	CD4034BM	† National	
	CD4034A	**† RCA (838,840)**	
	CD4034AE	**RCA (838,840)**	40
	CD4034B	**† RCA (838,840)**	
	CD4034BE	**RCA (838,840)**	
	HCC4034B	† SGS	
	HCF4034B	SGS	
	883/4034B	† SSS	45
	SCL4034B	SSS	
	CM4034A	† Solitron	
	CM4034AE	Solitron	
	TC4034B	Toshiba	
8-Bit Bus Register, Shift and Store	HD14094B	Hitachi	50
	MC14094BA	† Motorola	
	MC14094BC	Motorola	
	CD4094B	**† RCA (838)**	
	CD4094BE	**RCA (838)**	
	CD54HC4094	**RCA (843)**	55
	CD74HC4094	**RCA (843)**	
	CD74HCT4094	RCA	
	HCC4094B	† SGS	
	HCF4094B	SGS	
	74HC4094	**Signetics (908)**	60
	74HCT4094	**Signetics (908)**	
	HEF4094B	**Signetics (864,898)**	
		(Continued)	

Function	Device	Source	Line
8-Bit Bus Register, Shift and Store (Cont'd)			
	HEF4094BD	**Signetics (864)**	
	883/4094B	† SSS	
	SCL4094B	SSS	65
	TC4094B	Toshiba	
	TC40H194	Toshiba	
8-Bit Parallel In/Serial Out			
	54HC165	† Fairchild	
	74HC165	Fairchild	
	MC54HC165	† Motorola	70
	MC74HC165	Motorola	
	MM54C165	† National	
	MM54HC165	† National	
	MM74C165	National	
	MM74HC165	National	75
	CD54HC165	**† RCA (842)**	
	CD54HCT165	† RCA	
	CD74HC165	RCA	
	CD74HC166	RCA	
	CD74HCT165	**RCA (842)**	80
	SP75HC165	SPI	
	74HC165	**Signetics (907)**	
	74HC166	**Signetics (907)**	
	74HCT165	**Signetics (907)**	
	74HCT166	**Signetics (907)**	85
	SN54HC165	† TI	
	SN74HC165	TI	
	TC40H166	Toshiba	
	TC74HC165	Toshiba	
	ZX54HCT165	† Zytrex	90
	ZX74HCT165	Zytrex	
8-Bit Parallel-In, Serial-Out Register with Input Latches	MC54HC597	† Motorola	
	MC74HC597	Motorola	
	SN54HC597	† TI	
	SN74HC597	TI	95
8-Bit Serial In/Parallel Out	54HC164	† Fairchild	
	74HC164	Fairchild	
	MC54HC164	† Motorola	
	MC74HC164	Motorola	
	MM54C164	† National	100
	MM54HC164	† National	
	MM74C164	National	
	MM74HC164	National	
	CD54HC164	**† RCA (842)**	
	CD54HCT164	† RCA	105
	CD74HC164	RCA	
	CD74HCT164	**RCA (842)**	
	SP74HC164	SPI	
	74HC164	**Signetics (907)**	
	74HCT164	**Signetics (907)**	110
	SN54HC164	† TI	
	SN74HC164	TI	
	TC40H164	Toshiba	
	TC74HC164	Toshiba	
	ZX54HCT164	† Zytrex	115
	ZX74HCT164	Zytrex	
8-Bit Serial/Parallel-In, Serial Out	MC54HC166	† Motorola	
	MC74HC166	Motorola	
	CD54HC166	**† RCA (842)**	
8-Bit Serial-In, Parallel-Out Register with Output Latches	MC54HC595	† Motorola	120
	MC74HC595	Motorola	
	SN54HC595	† TI	
	SN74HC595	TI	
8-Bit Synchronous Parallel In/Serial Out	F4014BC	Fairchild	
	F4014BM	† Fairchild	125
	HD14014B	Hitachi	
	MC14014BA	† Motorola	
		(Continued)	

Function	Device	Source	Line
8-Bit Synchronous Parallel In/Serial Out (Cont'd)			
	MC14014BC	Motorola	
	MC54HC589	† Motorola	
	MC74HC589	Motorola	130
	CD4014A	National	
	CD4014BC	National	
	CD4014BM	† National	
	CD4014A	**† RCA (838)**	
	CD4014AE	**RCA (838)**	135
	CD4014B	**† RCA (838)**	
	CD4014BE	**RCA (838)**	
	HCC4014B	† SGS	
	HCF4014B	SGS	
	HEF4014B	**Signetics (864,898)**	140
	HEF4014BD	**† Signetics (864)**	
	883/4014B	† SSS	
	SCL4014B	SSS	
	CM4014A	† Solitron	
	CM4014AE	Solitron	145
	TC4014B	Toshiba	
8-Bit, Three-State	54HC299	† Fairchild	
	74HC299	Fairchild	
	MC54HC299	† Motorola	
	MC74HC299	Motorola	150
	MM54HC299	† National	
	MM74HC299	National	
	CD54HC299	**† RCA (842)**	
	CD54HCT299	† RCA	
	CD74HC299	RCA	155
	CD74HCT299	**RCA (842)**	
	74HC299	**Signetics (907)**	
	74HCT299	**Signetics (907)**	
	SN54HC299	† TI	
	SN74HC299	TI	160
18-Bit Static (4, 5, 8, 9, 10, 12, 13, 14, 16, 17, 18-bits)	F4006BC	Fairchild	
	F4006BM	† Fairchild	
	HD14006B	Hitachi	
	MC14006BA	† Motorola	
	MC14006BC	Motorola	165
	CD4006A	National	
	CD4006BC	National	
	CD4006BM	† National	
	CD4006A	**† RCA (838)**	
	CD4006AE	**RCA (838)**	170
	CD4006B	**† RCA (838)**	
	CD4006BE	**RCA (838)**	
	HCC4006B	† SGS	
	HCF4006B	SGS	
	HEF4006B	**Signetics (864,898)**	175
	HEF4006BD	**† Signetics (864)**	
	883/4006B	† SSS	
	SCL4006B	SSS	
	CM4006A	† Solitron	
	CM4006AD	Solitron	180
	CM4006AE	Solitron	
	TC4006B	Toshiba	
30-Bit Static	MD4330B	† Mitel	
	MV4330	Plessey	
32-Bit Bidirectional Serial In/Serial Out	**CD40100B**	**† RCA (838)**	185
	CD40100BE	**RCA (838)**	
	HCC40100B	† SGS	
	HCF40100B	SGS	
32-Bit Serial In/Parallel Out	MD4332B	† Mitel	
	MV4332	Plessey	190

† Military Temperature Range (−55° to 125°C)

* Typical Value

Bold face indicates additional data is provided on the page noted.

DIGITAL–CMOS (Cont'd)

Shift Registers (Cont'd)

Function	Device	Source	Line
64-Bit Static	F4031BC	Fairchild	
	F4031BM	† Fairchild	
	CD4031BC	National	
	CD4031BM	† National	
	CD4031A	**† RCA (838)**	5
	CD4031AE	**RCA (838)**	
	CD4031B	**† RCA (838)**	
	CD4031BE	**RCA (838)**	
	MS612	RTC	
	HCC4031B	† SGS	10
	HCF4031B	SGS	
	HEF4031B	**Signetics (864,898)**	
	HEF4031BD	**† Signetics (864)**	
64-Bit Variable Length	F4557BC	† Fairchild	
	F4557BM	Fairchild	15
	HD14557B	Hitachi	
	MC14557BA	† Motorola	
	MC14557BC	Motorola	
	HEF4557B	**Signetics (865,899)**	
	HEF4557BD	**† Signetics (865)**	20
96-Bit Variable Length Elastic	MS618	† RTC	
128-Bit Static with Control Logic	MS625	† RTC	
128-Bit Static (16-bit increments)	MC14562BA	† Motorola	
	MC14562BC	Motorola	

Translators

Function	Device	Source	Line
HNIL/HTL is suitable for translation/input protection. See HNIL/HTL section			25
Quad Level Shifter (low to high voltage)	**CD40109B**	**† RCA (837)**	
	CD40109BE	**RCA (837)**	
	HCC40109B	† SGS	
	HCF40109B	SGS	
Quad Voltage Up Level Translator	F4104BE	Fairchild	30
	F4104BM	† Fairchild	
	HEF4104B	**Signetics (864,898)**	
Hex Level Shifter (CMOS or TTL to CMOS)	MC14504BA	† Motorola	
	MC14504BC	Motorola	
Hex Level Shifter (low-to-high voltage)	TC5020B	Toshiba	35
Octal Bidirectional Level (CMOS/TTL)	**CD40116**	**RCA (837)**	

Miscellaneous

Function	Device	Source	Line
Microprocessor, 1-Bit, Industrial Control Unit	MC14500B	Motorola	
Addressable Asynchronous Receiver/Transmitter	MC14469	Motorola	
ARINC 429 Single Channel Serial to Parallel Decoder	MT70003	MCE	
ARINC 429 Dual Channel Parallel to Serial Decoder	MT70014	MCE	40
ARINC 429 Eight Channel Serial to Parallel Decoder	MT34009	MCE	
Asynchronous Serial Manchester Adapter	**HD6408-9**	**Harris (1492,1496)**	
Bit Rate Generator	F4702BC	Fairchild	
	F4702BM	† Fairchild	
	HD4702-2	**† Harris (1492)**	45
	HD4702-9	**Harris (1492)**	
	MC14411	**Motorola (3536)**	
CMOS Transistor Array (See also 4007 Dual Complementary Pair and Inverter-listed under Buffers/Inverters)	**CA3600**	**† RCA (3601)**	
Code Identification System	**HD15530-2**	**† Harris (1493,1498)**	
	HD15530-9	**Harris (1493,1498)**	50
	HD15531-2	† Harris	
	HD15531-9	Harris	
Comparator, Linear, Dual with Dual Op Amp	MC14574	Motorola	
Comparator, Linear, Dual with Quad Op Amp	MC14573	Motorola	
Comparator, Linear, Quad	MC14575	Motorola	55
	MM54C909	† National	
	MM74C909	National	
Comparator Phase	MM74C932	National	
Counter/Latch	**SP54HC176**	**† SPI (848)**	
	SP74HC176	**SPI (848)**	60
	SP74HC177	**SPI (848)**	
Digital Logic (for 3- 1/2 digit A/D systems)	MC14435	Motorola	
	MC14435E	† Motorola	
Encoder	TC40H147	Toshiba	
	TC40H148	Toshiba	65
Equality Comparator, 8-Bit	MM54HC688	† National	
	MM74HC688	National	
FIFO Memory, 512 Bit	MT003	MCE	
FIFO, 16x4	54HC4703	† Fairchild	
	74HC4703	Fairchild	70
Filter, Phase Locked Loop	CD54HC297	† RCA	
	CD54HCT297	† RCA	
	CD74HC297	RCA	
	CD74HCT297	RCA	
	74HC297	**Signetics (907)**	75
	74HCT297	**Signetics (907)**	
Heart Rate Monitor	HLSS0533	Hughes	
Local Network Terminal Controller	MT006	MCE	
Low voltage CMOS devices (Counters, Display Drivers, Counter-Timers) not usually mixed with 5-20v CMOS logic are listed under Digital-Special or CMOS-Oscillators/Dividers			
Modem (0-600 b/s)	**MC14412**	**Motorola (3536)**	80
Parity Generator and Checker, 9-Bit	**CD40101B**	**† RCA (840)**	
	CD40101BE	**RCA (840)**	
	HCC40101B	† SGS	
	HCF40101B	SGS	
Phase-Locked Loop	F4046BC	Fairchild	85
	F4046BM	† Fairchild	
	HD14046B	Hitachi	
	MC14046BA	† Motorola	
	MC14046BC	Motorola	
	MC54HC4046	† Motorola	90
		(Continued)	
Phase-Locked Loop (Cont'd)	MC74HC4046	Motorola	
	CD4046BC	National	
	CD4046BM	† National	
	CD4046A	**† RCA (840)**	
	CD4046AE	**RCA (840)**	95
	CD4046B	**† RCA (840)**	
	CD4046BE	**RCA (840)**	
	CD54HC4046	**† RCA (843)**	
	CD54HCT4046	† RCA	
	CD74HC4046	**RCA (843)**	100
	CD74HCT4046	RCA	
	HCC4046B	† SGS	
	HCF4046B	SGS	
	74HC4046	**Signetics (908)**	
	74HCT4046	**Signetics (908)**	105
	HEF4046B	**Signetics (864,898)**	
	HEF4046BD	**† Signetics (864)**	
	883/4046B	† SSS	
	883/4446B	† SSS	
	SCL4046B	SSS	110
	SCL4446B	SSS	
Phase-Locked Loop Filter	**CD54HC297**	**† RCA (842)**	
	CD54HCT297	† RCA	
	CD74HC297	RCA	
	CD74HCT297	**RCA (842)**	115
Programmable Digital Delay Timer	**LS7210**	**LSIComp (803)**	
Programmable Frequency Divider/Digital Timer	MC54HC292	† Motorola	
	MC54HC294	† Motorola	
	MC74HC292	Motorola	
	MC74HC294	Motorola	120
Remote Control Manchester Encoder/Decoder with programmable address encoding/decoding	ED11	Supertex	
	ED15	Supertex	
	ED5	Supertex	
	ED9	Supertex	
Remote Control Receiver/Transmitter Pair	MCC14457	Motorola	125
	MCC14458	Motorola	
Remote Control Transmitter/Receiver (encoder/decoder)	DC-7	Supertex	
Serial Manchester Encoder-Decoder	**HD6409**	**Harris (1493,1497)**	
Successive Approximation Register	HD14559B	Hitachi	
	MC14559BA	† Motorola	130
	MC14559BC	Motorola	
	MM54C905	† National	
	MM74C905	National	
Successive Approximation Register, Cascadable	HD14549B	Hitachi	
	MC14549BA	† Motorola	135
	MC14549BC	Motorola	
Successive Approximation Register, 12-Bit	SP74HCT504	SPI	
Successive Approximation Register, 8-Bit	**SP74HCT502**	**SPI (844)**	
	SP74HCT503	**SPI (844)**	
Synchronous Decade Rate Multiplier	SP74HC167	SPI	140
Synthesizers, see Linear-Phase Locked Loop Circuits			
Touch Switch	TC9130	Toshiba	
	TC9135	Toshiba	

† Military Temperature Range (−55° to 125°C)

* Typical Value

Bold face indicates additional data is provided on the page noted.

© IC MASTER 1984

DIGITAL-CMOS (Cont'd)

Function	Device	Source		Line
Miscellaneous (Cont'd)				
UART	HMMP1854	† Hughes		
	HMMP1854C	† Hughes		
	MT80001	MCE		
	CDP1854A	**† RCA**	**(1595)**	
	CDP6402	**RCA**	**(1595)**	5
Binary Rate Multiplier				
	CD4089BC	National		
	CD4089BM	† National		
	CD4089B	**† RCA**	**(840)**	
	CD4089BE	**RCA**	**(840)**	
	HCC4089B	† SGS		10
	HCF4089B	SGS		
Binary-to-Phone Pulse Converter (See also linear-telecommunication circuits.)				
	MC14408	**Motorola**	**(3536)**	
	MC14409	**Motorola**	**(3536)**	
BCD Rate Multiplier				
	HD14527B	Hitachi		
	MC14527BA	† Motorola		15
	MC14527BC	Motorola		
	CD4527BC	National		
	CD4527BM	† National		
	CD4527B	**† RCA**	**(840)**	
	CD4527BE	**RCA**	**(840)**	20
	HCC4527B	† SGS		
	HCF4527B	SGS		
	HEF4527B	**Signetics**	**(864,898)**	
	HEF4527BD	**† Signetics**	**(864)**	
	883/4527B	† SSS		25
	SCL4527B	SSS		
	TC4527B	Toshiba		
Dual Differential Line Driver				
	MM78C30	† National		
	MM88C30	National		
Dual Schmitt Trigger				
	F4583BC	Fairchild		30
	F4583BM	† Fairchild		
	HD14583B	Hitachi		
	MC14583BA	† Motorola		
	MC14583BC	Motorola		
	TC4583B	Toshiba		35
Dual 4-Bit Terminator				
	CD40117B	**RCA**	**(840)**	
Dual 4-Channel Analog Multiplexer/Demultiplexer				
	54HC4052	† Fairchild		
	74HC4052	Fairchild		
	74HC4052	**Signetics**	**(908)**	
	74HCT4052	**Signetics**	**(908)**	40
	TC74HC4052	Toshiba		
Triple 2-Channel Analog Multiplexer/Demultiplexer				
	54HC4053	† Fairchild		
	74HC4053	Fairchild		
	74HC4053	**Signetics**	**(908)**	
	74HCT4053	**Signetics**	**(908)**	45
	TC74HC4053	Toshiba		
Quad Bus Tranceiver, Three-State, Inverting				
	SP74HC242	SPI		
	TC74HC242	Toshiba		
Quad Bus Tranceiver, Three-State, Non-Inverting				
	TC74HC243	Toshiba		
Quad Bus Transceiver, Three-State, Inverting				
	54HC242	† Fairchild		50
	54HC243	† Fairchild		
	74HC242	Fairchild		
	74HC243	Fairchild		
	MC54HC242	† Motorola		
	MC54HC243	† Motorola		55
	MC74HC242	Motorola		
	MC74HC243	Motorola		
			(Continued)	

Function	Device	Source		Line
Quad Bus Transceiver, Three-State, Inverting (Cont'd)				
	MM54HC242	† National		
	MM74HC242	National		
	MN74HC242	**Panasonic**	**(831)**	60
	MN74HC243	**Panasonic**	**(831)**	
	CD54HC242	**† RCA**	**(842)**	
	CD54HC243	**† RCA**	**(842)**	
	CD54HCT242	† RCA		
	CD54HCT243	† RCA		65
	CD74HC242	RCA		
	CD74HC243	RCA		
	CD74HCT242	**RCA**	**(842)**	
	CD74HCT243	**RCA**	**(842)**	
	74HC242	**Signetics**	**(907)**	70
	74HC243	**Signetics**	**(907)**	
	74HCT242	**Signetics**	**(907)**	
	74HCT243	**Signetics**	**(907)**	
	54HCT242	† Supertex		
	54HCT243	† Supertex		75
	74HCT242	Supertex		
	74HCT243	Supertex		
	74SC242	Supertex		
	74SC243	Supertex		
Quad Precision Timer/Driver (inputs cause outputs to switch state for 100 clock pulses)				
	MC14415	Motorola		80
	MC14415E	† Motorola		
Quad Single Ended Line Driver				
	MM78C29	† National		
	MM88C29	National		
Quad 2-Input NAND Schmitt Trigger				
	54HC132	† Fairchild		
	74HC132	Fairchild		85
	F4093BC	† Fairchild		
	F4093BM	Fairchild		
	HD14093B	Hitachi		
	MC14093BA	† Motorola		
	MC14093BC	Motorola		90
	MC54HC132	† Motorola		
	MC74HC132	Motorola		
	CD4093BC	National		
	CD4093BM	† National		
	MM54HC132	† National		95
	MM74HC132	National		
	MN4093B	**† Panasonic**	**(828)**	
	CD4093B	**† RCA**	**(837)**	
	CD4093BE	**RCA**	**(837)**	
	CD54HC132	**† RCA**	**(842)**	100
	CD54HCT132	† RCA		
	CD74HC132	RCA		
	CD74HCT132	**RCA**	**(842)**	
	SP74HC132	**SPI**	**(848)**	
	SP75HC132	SPI		105
	HCC4093B	† SGS		
	HCF4093B	SGS		
	74HC132	**Signetics**	**(907)**	
	74HCT132	**Signetics**	**(907)**	
	HEF4093B	**Signetics**	**(864,898)**	110
	HEF4093BD	**Signetics**	**(864)**	
	883/4093B	† SSS		
	SCL4093B	SSS		
	SN54HC132	† TI		
	SN74HC132	TI		115
	TC4093B	Toshiba		
	TC74HC132	Toshiba		
Hex Contact Bounce Eliminator				
	MC14490	Motorola		
	MC14490E	† Motorola		
Hex Schmitt Trigger Inverter				
	MM54HC14	† National		120
	MM74HC14	National		

Function	Device	Source		Line
Hex Schmitt Trigger				
	F40014AM	† Fairchild		
	F40014BC	Fairchild		
	HD14584B	Hitachi		
	MC14584BA	† Motorola		125
	MC14584BC	Motorola		
	MC54HC14	† Motorola		
	MC74HC14	Motorola		
	CD40106BC	National		
	CD40106BM	† National		130
	CD4584BC	National		
	CD4584BM	† National		
	MM54C14	† National		
	MM54C914	† National		
	MM74C14	National		135
	MM74C914	National		
	MN74HC14	**Panasonic**	**(830)**	
	CD40106B	**† RCA**	**(837)**	
	CD40106BE	**RCA**	**(837)**	
	CD54HC14	**† RCA**	**(842)**	140
	CD54HCT14	† RCA		
	CD74HC14	RCA		
	CD74HCT14	**RCA**	**(842)**	
	SP54HC14	**† SPI**	**(848)**	
	SP74HC14	**SPI**	**(848)**	145
	HCC40106B	† SGS		
	HCF40106B	SGS		
	74HC14	**Signetics**	**(907)**	
	74HCT14	**Signetics**	**(907)**	
	HEF40106	**Signetics**	**(865)**	150
	HEF40106B	**Signetics**	**(865,899)**	
	HEF40106BD	**† Signetics**	**(865)**	
	883/4584B	† SSS		
	SCL4584B	SSS		
	SN54HC14	† TI		155
	SN74HC14	TI		
	TC584B	Toshiba		
Octal/Bus Driver (schmitt trigger), Non-Inverting, Three-State, Complementary Controls				
	54HC244	† Fairchild		
	74HC244	Fairchild		
	G74SC244	GTEMicro		160
	MD54HCT244R	**† Mitel**	**(3052)**	
	MD54SC244	† Mitel		
	MD74HCT244R	**Mitel**	**(3052)**	
	MD74SC244	Mitel		
	MC54HC244	† Motorola		165
	MC54HCT244	† Motorola		
	MC74HC244	Motorola		
	MC74HCT244	Motorola		
	MM54C244	National		
	MM54HC244	† National		170
	MM74C244	National		
	MM74HC244	National		
	MN74HC244	**Panasonic**	**(831)**	
	CD54HC244	**† RCA**	**(842)**	
	CD54HCT244	† RCA		175
	CD74HC244	RCA		
	CD74HCT244	**RCA**	**(842)**	
	SP54SC244	† SPI		
	SP74HC244	**SPI**	**(848)**	
	SP74HCT244	**SPI**	**(844)**	180
	SP74SC244	SPI		
	74HC244	**Signetics**	**(907)**	
	74HCT244	**Signetics**	**(907)**	
	HEF40244B	**Signetics**	**(865,899)**	
	54HCT244	† Supertex		185
	74HCT244	Supertex		
	74SC244	Supertex		
	TC40H244	Toshiba		
	TC74HC244	Toshiba		
			(Continued)	

† Military Temperature Range (−55° to 125°C)

* Typical Value

Bold face indicates additional data is provided on the page noted.

DIGITAL

Master Selection Guide

DIGITAL–CMOS (Cont'd)

Miscellaneous (Cont'd)

Function	Device	Source	Line
Octal/Bus Driver (schmitt trigger), Non-Inverting, Three-State, Complementary Controls (Cont'd)			
	TC74HCT244	Toshiba	
	ZX54HCT244	† Zytrex	
	ZX74HCT244	Zytrex	
Octal Bus Driver (schmitt trigger), Inverting, Three-State			
	54HC240	† Fairchild	
	74HC240	Fairchild	5
	G74SC240	GTEMicro	
	MD54HCT240	**† Mitel (3050)**	
	MD54SC240	† Mitel	
	MD74HCT240	**Mitel (3050)**	
	MD74SC240	Mitel	10
	MC54HC240	† Motorola	
	MC54HCT240	† Motorola	
	MC74HC240	Motorola	
	MC74HCT240	Motorola	
	MM54C240	† National	15
	MM54HC240	† National	
	~~MM74C240~~	~~National~~	
	MM74HC240	National	
	MN74HC240	**Panasonic (831)**	
	CD54HC240	**† RCA (842)**	20
	CD54HCT240	† RCA	
	CD74HC240	RCA	
	CD74HCT240	**RCA (842)**	
	SP54HC240	**† SPI (848)**	
	SP54SC240	† SPI	25
	SP74HC240	**SPI (848)**	
	SP74HCT240	**SPI (844)**	
	SP74SC240	SPI	
	74HC240	**Signetics (907)**	
	74HCT240	**Signetics (907)**	30
	HEF40240B	**Signetics (865,899)**	
	54HCT240	† Supertex	
	74HCT240	Supertex	
	74SC240	Supertex	
	TC40H240	Toshiba	35
	TC74HC240	Toshiba	
	TC74HCT240	Toshiba	
	ZX54HCT210	† Zytrex	
	ZX54HCT240	† Zytrex	
	ZX74HCT210	Zytrex	40
	ZX74HCT240	Zytrex	
Octal Bus Driver (schmitt trigger), Non-Inverting, Three-State, Symmetrical Controls			
	54HC241	† Fairchild	
	74HC241	Fairchild	
	G74SC241	GTEMicro	
	MD54HCT241B	**† Mitel (3051)**	45
	MD54SC241	† Mitel	
	MD74HCT241B	**Mitel (3051)**	
	MD74SC241	Mitel	
	MC54HC241	† Motorola	
	MC54HCT241	† Motorola	50
	MC74HC241	Motorola	
	MC74HCT241	Motorola	
	MM54HC241	† National	
	MM74HC241	National	
	MN74HC241	**Panasonic (831)**	55
	CD54HC241	**† RCA (842)**	
	CD54HCT241	† RCA	
	CD74HC241	RCA	
	CD74HCT241	**RCA (842)**	
	SP54HC241	**† SPI (848)**	60
	SP54SC241	† SPI	
	SP74HC241	**SPI (848)**	
	SP74HCT241	**SPI (844)**	
	SP74SC241	SPI	
	74HC241	**Signetics (907)**	65
		(Continued)	

Function	Device	Source	Line
Octal Bus Driver (schmitt trigger), Non-Inverting, Three-State, Symmetrical Controls (Cont'd)			
	74HCT241	**Signetics (907)**	
	54HCT241	† Supertex	
	74HCT241	Supertex	
	74SC241	Supertex	
	TC40H241	Toshiba	70
	TC74HC241	Toshiba	
	ZX54HCT241	† Zytrex	
	ZX74HCT241	Zytrex	
Octal Bus Transceiver and Register, Inverting, Three-State			
	54HC648	† Fairchild	
	74HC648	Fairchild	75
	MC54HC648	† Motorola	
	MC74HC648	Motorola	
	MM54HC648	† National	
	MM74HC648	National	
	CD54HC648	**† RCA (843)**	80
	CD54HCT648	† RCA	
	CD74HC648	**RCA (843)**	
	CD74HCT648	RCA	
	~~**74HC648**~~	~~**Signetics (908)**~~	
	74HCT648	**Signetics (908)**	85
	SN54HC648	† TI	
	SN74HC648	TI	
Octal Bus Transceiver and Register, Non-Inverting, Three-State			
	54HC646	† Fairchild	
	74HC646	Fairchild	
	MC54HC646	† Motorola	90
	MC74HC646	Motorola	
	MM54HC646	† National	
	MM74HC646	National	
	CD54HC646	**† RCA (843)**	
	CD54HCT646	† RCA	95
	CD74HC646	**RCA (843)**	
	CD74HCT646	RCA	
	74HC646	**Signetics (908)**	
	74HCT646	**Signetics (908)**	
	SN54HC646	† TI	100
	SN74HC646	TI	
Octal Bus Transceiver, Inverting/Non-Inverting			
	54HC643	† Fairchild	
	74HC643	Fairchild	
	TC74HC643	Toshiba	
Octal Bus Transceiver, Inverting			
	54HC640	† Fairchild	105
	74HC640	Fairchild	
	TC74HC640	Toshiba	
Octal Bus Transceiver, Three-State			
	MC54HC640	† Motorola	
	MC54HC643	† Motorola	
	MC74HC640	Motorola	110
	MC74HC643	Motorola	
Octal Bus Transceiver, Three-State, Inverting			
	MC54HCT640	† Motorola	
	MC54HCT643	† Motorola	
	MC74HCT640	Motorola	
	MC74HCT643	Motorola	115
	CD54HC640	**† RCA (843)**	
	CD54HC643	**† RCA (843)**	
	CD54HCT640	† RCA	
	CD54HCT643	† RCA	
	CD74HC640	**RCA (843)**	120
	CD74HC643	**RCA (843)**	
	CD74HCT640	RCA	
	CD74HCT643	RCA	
	74HC640	**Signetics (908)**	
	74HC643	**Signetics (908)**	125
	74HCT640	**Signetics (908)**	
	~~**74HCT643**~~	~~**Signetics (908)**~~	
	ZX54HCT640	† Zytrex	
	ZX54HCT643	† Zytrex	
		(Continued)	

Function	Device	Source	Line
Octal Bus Transceiver, Three-State, Inverting (Cont'd)			
	ZX74HCT640	Zytrex	130
	ZX74HCT643	Zytrex	
Octal Bus Transceiver, Three-State, Non-Inverting			
	54HC245	† Fairchild	
	74HC245	Fairchild	
	G74SC245	GTEMicro	
	MD54HCT245R	**† Mitel (3053)**	135
	MD54SC245	† Mitel	
	MD74HCT245R	**Mitel (3053)**	
	MD74SC245	Mitel	
	MC54HC245	† Motorola	
	MC54HCT245	† Motorola	140
	MC74HC245	Motorola	
	MC74HCT245	Motorola	
	MN74HC245	**Panasonic (831)**	
	CD54HC245	**† RCA (842)**	
	CD54HCT245	† RCA	145
	CD74HC245	RCA	
	CD74HCT245	**RCA (842)**	
	~~CD74HCT245~~	~~RCA~~	
	SP54SC245	† SPI	
	SP74HCT245	**SPI (844)**	150
	SP74SC245	SPI	
	74HC245	**Signetics (907)**	
	74HCT245	**Signetics (907)**	
	HEF40245B	**Signetics (865,899)**	
	54HCT245	† Supertex	155
	74HCT245	Supertex	
	74SC245	Supertex	
	SN54HC245	† TI	
	SN54HC645	† TI	
	SN74HC245	TI	160
	SN74HC645	TI	
	TC40H245	Toshiba	
	TC74HC245	Toshiba	
	ZX54HCT245	† Zytrex	
	ZX74HCT245	Zytrex	165
Octal Bus Transceiver			
	54HC645	† Fairchild	
	74HC645	Fairchild	
Octal D Register/Bus Transceiver			
	54HC543	† Fairchild	
	54HC544	† Fairchild	
	74HC543	Fairchild	170
	74HC544	Fairchild	
Octal Register/Bus Transceiver, Inverting			
	54HC648	† Fairchild	
	74HC648	Fairchild	
Octal Register/Bus Transceiver			
	54HC550	† Fairchild	
	54HC551	† Fairchild	175
	74HC550	Fairchild	
	74HC551	Fairchild	
Octal Registered Transceiver			
	54HC550	† Fairchild	
	54HC551	† Fairchild	
	74HC550	Fairchild	180
	74HC551	Fairchild	
2 of 8 Keyboard to Binary Encoder			
	MC14419	**Motorola (3536)**	
4-Bit Binary Counter/Clock Generator			
	TC5018B	Toshiba	
8-Bit I/O Port	HCMP1852	Hughes	
	HCMP1852C	Hughes	185
	HMMP1852	† Hughes	
	~~HMMP1852C~~	~~† Hughes~~	
	CDP1852	**† RCA (1595)**	
	CDP1872C	**† RCA (1595)**	
		(Continued)	

† Military Temperature Range (−55° to 125°C)

* Typical Value

Bold face indicates additional data is provided on the page noted.

© IC MASTER 1984

DIGITAL–CMOS (Cont'd)

Function	Device	Source	Line
Miscellaneous (Cont'd)			
8-Bit I/O Port		(Cont'd)	
	CDP1874C	**† RCA (1595)**	
	CDP1875C	**† RCA (1595)**	
8-Bit Priority Encoder			
	F4532BC	Fairchild	
	F4532BM	† Fairchild	
	HD14532B	Hitachi	5
	MC14532BA	† Motorola	
	MC14532BC	Motorola	
	CD4532B	**† RCA (837)**	
	CD4532BE	**RCA (837)**	
	HCC4532B	† SGS	10
	HCF4532B	SGS	
	HEF4532B	**Signetics (865,898)**	
	HEF4532BD	**† Signetics (865)**	
	883/4532B	† SSS	
	SCL4532B	SSS	15
	TC4532B	Toshiba	
8-Channel Analog Multiplexer/Demultiplexer			
	54HC4051	† Fairchild	
	74HC4051	Fairchild	
	74HC4051	**Signetics (908)**	
	74HCT4051	**Signetics (908)**	20
	TC74HC4051	Toshiba	
10-Line to 4-Line DCD Priority Encoder			
	CD40147B	**† RCA (837)**	
	CD40147BE	**RCA (837)**	
	TC74HC147	Toshiba	
12-Bit Parity Tree			
	F4531BC	Fairchild	25
	F4531BM	† Fairchild	
	HD14531B	Hitachi	
	MC14531BA	† Motorola	
	MC14531BC	Motorola	
	HEF4531B	**Signetics (865,898)**	30
	HEF4531BD	**† Signetics (865)**	
	883/4531B	† SSS	
	SCL4531B	SSS	
	TC4531B	Toshiba	

† Military Temperature Range (−55° to 125°C)

* Typical Value

Bold face indicates additional data is provided on the page noted.

DIGITAL–ECL

10000 Series

Arithmetic Functions

The ECL-10000, 100K and III-Other Series are presented as separate groups in that sequence. The ECL-10H000 Series is twice the speed of the ECL-10000 Series

Function	Device	Source		Line
Look-Ahead Carry Circuit				
	F10179	Fairchild		
	F10579	† Fairchild		
	HD10179	Hitachi		
	MC10179	Motorola		5
	MC10579	† Motorola		
	MC10H179	**Motorola**	**(821)**	
	10179	**Signetics**	**(858)**	
Dual High Speed Adder/Subtractor				
	F10180	Fairchild		
	F10580	† Fairchild		10
	HD10180	Hitachi		
	MC10180	Motorola		
	MC10580	† Motorola		
	MC10H180	Motorola		
	10180	**Signetics**	**(858)**	15
2-Bit Logic Unit/Function Generator				
	MC10182	Motorola		
	MC10582	† Motorola		
2-Bit Multiplier, High Speed				
	MC10287	Motorola		
	MC10687	Motorola		
4x2-Bit Multiplier				
	MC10183	Motorola		20
4-Bit ALU Slice (microprocessor)				
	MC10800	Motorola		
4-Bit Logic Unit/Function Generator				
	F10181	Fairchild		
	F10581	† Fairchild		
	HD10181	Hitachi		
	MC10181	Motorola		25
	MC10581	† Motorola		
	MC10H181	**Motorola**	**(821)**	
	10181	**Signetics**	**(858)**	
5-Bit Comparator				
	F10566	† Fairchild		
	MC10166	Motorola		30
	MC10566	† Motorola		
	MC10H166	**Motorola**	**(821)**	
8x8-Bit Expandable Multiplier				
	MC10901	**Motorola**	**(4796)**	
8-Bit ALU with Parity				
	MC10900	**Motorola**	**(4796)**	
8-Bit BCD/Binary ALU				
	MC10902	**Motorola**	**(4796)**	35

Buffers

Function	Device	Source		Line
Hex	MC10188	Motorola		
	MC10H188	**Motorola**	**(821)**	
	10188	**Signetics**	**(858)**	

Inverters

Function	Device	Source		Line
Hex Inverter/Buffer				
	MC10195	Motorola		
	MC10595	† Motorola		40
Hex	MC10189	Motorola		
	MC10H189	**Motorola**	**(821)**	
	10189	**Signetics**	**(858)**	

Counters, Binary

Function	Device	Source		Line
4-Bit	F10016C	Fairchild		
	F10016M	† Fairchild		45
	MC10154	Motorola		

(Continued)

Function	Device	Source		Line
4-Bit			(Cont'd)	
	MC10178	Motorola		
	MC10554	† Motorola		
	MC10578	† Motorola		
	MC10H016	**Motorola**	**(821)**	50
4-Bit Universal	F10136	Fairchild		
	F10536	† Fairchild		
	HD10136	Hitachi		
	MC10136	Motorola		
	MC10536	† Motorola		55
	MC10H136	**Motorola**	**(821)**	
	10136	**Signetics**	**(858)**	

Counters, Decade

Function	Device	Source		Line
Bi-Quinary	MC10138	Motorola		
	MC10538	† Motorola		
Universal	F10137	Fairchild		60
	F10537	Fairchild		
	MC10137	Motorola		
	MC10537	Motorola		
	10137	**Signetics**	**(858)**	
Decade Counter				
	F10010C	Fairchild		65
	F10010M	† Fairchild		

Decoders

Function	Device	Source		Line
Binary to 1-8 (high)				
	F10162	Fairchild		
	F10562	† Fairchild		
	HD10162	Hitachi		
	DG10H162	Motorola		70
	MC10162	Motorola		
	MC10562	† Motorola		
	MC10H162	**Motorola**	**(821)**	
	10162	**Signetics**	**(858)**	
Binary to 1-8 (low)				
	F10161	Fairchild		75
	F10561	† Fairchild		
	HD10161	Hitachi		
	DG10H161	Motorola		
	MC10161	Motorola		
	MC10561	† Motorola		80
	MC10H161	**Motorola**	**(821)**	
	10161	**Signetics**	**(858)**	
Dual Binary to 1-4 (high)				
	F10172	Fairchild		
	F10572	† Fairchild		
	MC10172	Motorola		85
	MC10572	† Motorola		
	MC10H172	**Motorola**	**(821)**	
	10172	**Signetics**	**(858)**	
Dual Binary to 1-4 (low)				
	F10171	Fairchild		
	F10571	† Fairchild		90
	MC10171	Motorola		
	MC10571	† Motorola		
	MC10H171	**Motorola**	**(821)**	
	10171	**Signetics**	**(858)**	

Drivers

Function	Device	Source		Line
Dual TTL/MST Bus				
	MC10128	Motorola		95
Triple 3-Input Bus				
	MC10H423	**Motorola**	**(821)**	
Triple 4-3 Input Bus				
	F10123	Fairchild		
	F10523	† Fairchild		
	MC10123	Motorola		
	MC10H123	**Motorola**	**(821)**	100
	10123	**Signetics**	**(858)**	

Function	Device	Source		Line
Quad Bus	F10192	Fairchild		
	F10592	† Fairchild		
	MC10192	Motorola		
	10192	**Signetics**	**(858)**	105

Flip-Flops, D-Type

Function	Device	Source		Line
Dual Master-Slave				
	F10131	Fairchild		
	F10231	Fairchild		
	F10531	† Fairchild		
	F10631	† Fairchild		
	HD10131	Hitachi		110
	HD10231	Hitachi		
	MC10131	Motorola		
	MC10231	Motorola		
	MC10531	† Motorola		
	MC10631	† Motorola		115
	MC10H131	**Motorola**	**(821)**	
	10131	**Signetics**	**(858)**	
	10231	**Signetics**	**(858)**	
Hex Master-Slave (with common reset)				
	F10186	Fairchild		
	F10586	† Fairchild		120
	MC10186	Motorola		
	MC10586	† Motorola		
	MC10H186A	**Motorola**	**(821)**	
Hex Master-Slave				
	F10176	Fairchild		
	F10576	† Fairchild		125
	MC10176	Motorola		
	MC10576	† Motorola		
	MC10H176	**Motorola**	**(821)**	
	10176	**Signetics**	**(858)**	
	SN54L47	**† TI**	**(934)**	130

Flip-Flops, J-K Type

Function	Device	Source		Line
Dual J-K Master-Slave				
	F10135	Fairchild		
	F10535	† Fairchild		
	MC10135	Motorola		
	MC10535	† Motorola		
	MC10H135	**Motorola**	**(821)**	135
	10135	**Signetics**	**(858)**	

Gates, AND

Function	Device	Source		Line
Dual 4-Input	**10108**	**Signetics**	**(858)**	
Quad 2-Input (3 AND, 1 AND/NAND)				
	F10104	Fairchild		
	F10504	† Fairchild		
	HD10104	Fairchild		140
	HD10104	Hitachi		
	MC10104	Motorola		
	MC10504	† Motorola		
	MC10H104	**Motorola**	**(821)**	
	10104	**Signetics**	**(858)**	145
Hex	MC10197	Motorola		
	MC10597	† Motorola		
	SN54L46	† TI		

Gates, OR

Function	Device	Source		Line
Dual 3-Input 3-Output (line driver)				
	F10110	Fairchild		
	F10210	Fairchild		150
	F10510	† Fairchild		
	F10610	† Fairchild		
	HD10110	Hitachi		
	HD10210	Hitachi		
	MC10110	Motorola		155
	MC10210	Motorola		
	MC10610	† Motorola		

(Continued)

† Military Temperature Range (−55° to 125°C)

* Typical Value

Bold face indicates additional data is provided on the page noted.

© IC MASTER 1984

DIGITAL–ECL (Cont'd)

Function	Device	Source		Line
10000 Series				
Gates, OR (Cont'd)				
Dual 3-Input 3-Output (line driver)			(Cont'd)	
	MC10H210	**Motorola**	**(821)**	
	10110	**Signetics**	**(858)**	
Quad 2-Input (3 OR, 1 OR/NOR)				
	F10103	Fairchild		
	F10503	† Fairchild		
	MC10103	Motorola		5
	MC10503	† Motorola		
	MC10H103	**Motorola**	**(821)**	
	10103	**Signetics**	**(858)**	
Gates, NOR				
Dual 3-Input 3-Output (line driver)				
	F10111	Fairchild		
	F10211	Fairchild		10
	F10511	† Fairchild		
	F10611	† Fairchild		
	HD10111	Hitachi		
	HD10211	Hitachi		
	MC10111	Motorola		15
	MC10211	Motorola		
	MC10611	† Motorola		
	10111	**Signetics**	**(858)**	
	10210	**Signetics**	**(858)**	
	10211	**Signetics**	**(858)**	20
Dual 3-Input 3-Output (1 OR, 2 NOR) (line driver)				
	F10212	Fairchild		
	F10612	† Fairchild		
	MC10212	Motorola		
	MC10612	† Motorola		
	10112	**Signetics**	**(858)**	25
Triple 4-3-3 Input				
	F10106	Fairchild		
	F10506	† Fairchild		
	HD10106	Hitachi		
	MC10106	Motorola		
	MC10506	† Motorola		30
	MC10H106	**Motorola**	**(821)**	
	10106	**Signetics**	**(858)**	
Quad 2-Input (3 NOR, 1 OR/NOR)				
	F10102	Fairchild		
	F10502	† Fairchild		
	HD10102	Hitachi		35
	MC10102	Motorola		
	MC10502	† Motorola		
	MC10H102	**Motorola**	**(821)**	
	10102	**Signetics**	**(858)**	
Quad 3-Input (one input common)				
	F10100	Fairchild		40
	F105100	† Fairchild		
	MC10100	Motorola		
	MC10500	† Motorola		
	MC10H100	**Motorola**	**(821)**	
	10100	**Signetics**	**(858)**	45
Gates, OR/NOR				
Dual 4-5 Input	F10109	Fairchild		
	F10509	† Fairchild		
	HD10109	Hitachi		
	HD10209	Hitachi		
	MC10109	Motorola		50
	MC10509	† Motorola		
	MC10H109	**Motorola**	**(821)**	
	10109	**Signetics**	**(858)**	
Triple 2-3-2 Input				
	F10105	Fairchild		
	F10505	† Fairchild		55
	HD10105	Hitachi		
			(Continued)	

Function	Device	Source		Line
Triple 2-3-2 Input			(Cont'd)	
	MC10105	Motorola		
	MC10505	† Motorola		
	MC10H105	**Motorola**	**(821)**	
	DM10105	National		60
	10105	**Signetics**	**(858)**	
Quad 2-Input (one input common)				
	F10101	Fairchild		
	F10501	† Fairchild		
	HD10101	Hitachi		
	MC10101	Motorola		65
	MC10501	† Motorola		
	MC10H101	**Motorola**	**(821)**	
	10101	**Signetics**	**(858)**	
Gates, OR-AND				
Dual 2-Wide 3-Input				
	F10118	Fairchild		
	F10518	† Fairchild		70
	HD10118	Hitachi		
	MC10118	Motorola		
	MC10518	† Motorola		
	MC10H118	**Motorola**	**(821)**	
	10118	**Signetics**	**(858)**	75
4-Wide 4-3-3-3 Input				
	F10119	Fairchild		
	F10519	† Fairchild		
	HD10119	Hitachi		
	MC10119	Motorola		
	MC10519	† Motorola		80
	MC10H119	**Motorola**	**(821)**	
	10119	**Signetics**	**(858)**	
Gates, OR-AND/OR-AND Invert				
Dual 2-Wide 2-3 Input				
	F10117	Fairchild		
	F10517	† Fairchild		
	HD10117	Hitachi		85
	MC10117	Motorola		
	MC10517	† Motorola		
	MC10H117	**Motorola**	**(821)**	
	10117	**Signetics**	**(858)**	
4-Wide 3-Input	F10121	Fairchild		90
	F10521	† Fairchild		
	HD10121	Hitachi		
	MC10121	Motorola		
	MC10521	† Motorola		
	MC10H121	**Motorola**	**(821)**	95
	10121	**Signetics**	**(858)**	
Gates, Exclusive OR				
Quad	F10113	Fairchild		
	F10513	† Fairchild		
	MC10113	Motorola		
	MC10513	† Motorola		100
	MC10H113	**Motorola**	**(821)**	
	10113	**Signetics**	**(858)**	
Gates, Exclusive OR/NOR				
Triple 2-Input	F10107	Fairchild		
	F10507	† Fairchild		
	HD10107	Hitachi		105
	MC10107	Motorola		
	MC10507	† Motorola		
	MC10H107	**Motorola**	**(821)**	
	10107	**Signetics**	**(858)**	

Function	Device	Source		Line
Latches				
Dual D Clocked	F10130	Fairchild		110
	F10530	† Fairchild		
	HD10130	Hitachi		
	HD10230	Hitachi		
	MC10130	Motorola		
	MC10530	† Motorola		115
	MC10H130	**Motorola**	**(821)**	
	10130	**Signetics**	**(858)**	
Dual 2 to 1 Multiplexer-Latch				
	F10134	Fairchild		
	F10534	† Fairchild		
	HD10134	Hitachi		120
	MC10134	Motorola		
	MC10534	† Motorola		
	10134	**Signetics**	**(858)**	
Dual 2 to 1 Multiplexer-Latch, Common Reset				
	F10132	Fairchild		
	F10532	† Fairchild		125
	HD10132	Hitachi		
	MC10132	Motorola		
	MC10532	† Motorola		
	10132	**Signetics**	**(858)**	
Quad, Common Clock, Separate Output Enable				
	F10168	Fairchild		130
	F10568	† Fairchild		
	MC10168	Motorola		
	MC10568	† Motorola		
Quad D, Gated Output				
	F10133	Fairchild		
	F10153	Fairchild		135
	F10533	† Fairchild		
	F10553	† Fairchild		
	HD10133	Hitachi		
	MC10133	Motorola		
	MC10153	Motorola		140
	MC10533	† Motorola		
	MC10553	† Motorola		
	10133	**Signetics**	**(858)**	
Quad 2-Input Multiplexer-Latch				
	F10173	Fairchild		
	F10573	† Fairchild		145
	MC10173	Motorola		
	MC10H173	**Motorola**	**(821)**	
	10173	**Signetics**	**(858)**	
Quintuple	F10175	Fairchild		
	F10575	† Fairchild		150
	HD10175	Hitachi		
	MC10175	Motorola		
	MC10575	† Motorola		
	MC10H175	**Motorola**	**(821)**	
	10175	**Signetics**	**(858)**	155
Memories				
For additional information, see Master Selection Guide-Memory sections				
CAM (16-Bit content addressable)				
	MC10H155	**Motorola**	**(821)**	
	10155	**Signetics**	**(858)**	
PROM (32x8)	**MCM10139**	**Motorola**	**(4047)**	
	10139	Signetics		160
PROM (256x4)	F10416	Fairchild		
	F10Z416	Fairchild		
PROM (256x4)	**MCM10149**	**Motorola**	**(4047)**	
	GXB10149	Siemens		
	10149	**Signetics**	**(858)**	165
RAM (8x2) Simultaneous Read-Write				
	MCM10143	**Motorola**	**(4046)**	

† Military Temperature Range (−55° to 125°C)

* Typical Value

Bold face indicates additional data is provided on the page noted.

DIGITAL–ECL (Cont'd)

10000 Series Memories (Cont'd)

Function	Device	Source	
RAM (16x4)	F10402	Fairchild	
	MC10H145	**Motorola**	**(821)**
RAM (16x4)	F10145AC	Fairchild	
	F10545AM	† Fairchild	
	HD10145	Hitachi	
	MCM10145	**Motorola**	**(4046)**
	10145	Signetics	
RAM (64x1)	SN10142	TI	
RAM (64x1) 50 Ohm Drive			
	HD10148	Hitachi	
	MC10148	Motorola	
	MCM10548	† Motorola	
	μPB10148	NEC	
	SN10148	TI	
RAM (64x1) 90 Ohm Drive			
	SN10140	TI	
RAM (128x1)	HD10147	Hitachi	
	~~**MCM10147**~~	~~**Motorola**~~	~~**(4046)**~~
	MCM10547	† Motorola	
	GXB10147A	Siemens	
	SN10147	TI	
RAM (256x1)	HM2106	Hitachi	
	MCM10144	**Motorola**	**(4046)**
	MCM10152	**Motorola**	**(4046)**
	MCM10544	† Motorola	
	DM10414	National	
	μPB10144	NEC	
	SN10144	TI	
RAM (256x4)	MB7072E	Fujitsu	
	MB7072N	Fujitsu	
	MBM10422A-7	Fujitsu	
	MBM10422E	Fujitsu	
	MBM10422H	Fujitsu	
	MBM10422N	Fujitsu	
	HM2120	Hitachi	
	DM10422	National	
RAM (1024x1)	F100415A	Fairchild	
	F10415	Fairchild	
	F10415A	Fairchild	
	F10474C	Fairchild	
	MBM10474-15	Fujitsu	
	HM2110	Hitachi	
	HM2112	Hitachi	
	MCM10146	**Motorola**	**(4046)**
	MCM10415A	**Motorola**	**(4047)**
	MCM10546	† Motorola	
	DM10415	National	
	10415	Signetics	
	10474	Signetics	
	10474A	Signetics	
RAM (1024x4)	**MCM10474**	**Motorola**	**(4047)**
	MCM10474A	**Motorola**	**(4047)**
	10474	Signetics	
	10474A	Signetics	
RAM (4096x1)	MBM10470A-10	Fujitsu	
	MBM10470A-15	Fujitsu	
	MCM10470	**Motorola**	**(4047)**
RAM (4096x1)	F10470	Fairchild	
	MBM10470A-20	Fujitsu	
	HM2140	Hitachi	
	HM2142	Hitachi	
	DM10470	National	
	DM10470A	National	
	DM10470L	National	
RAM (16384x1)	F10480	Fairchild	

Multiplexers (Digital)

Function	Device	Source	
Dual 4 to 1	F10174	Fairchild	
	F10574	† Fairchild	
	HD10174	Hitachi	
	MC10174	Motorola	
	MC10574	† Motorola	
	MC10H174	**Motorola**	**(821)**
	10174	**Signetics**	**(858)**
	SN10174	TI	
Quad 2 to 1 (inverting with enable)			
	F10159	Fairchild	
	F10559	† Fairchild	
	MC10159	Motorola	
	MC10559	† Motorola	
	MC10H159	**Motorola**	**(821)**
	10159	**Signetics**	**(858)**
Quad 2 to 1 (non-inverting)			
	F10158	Fairchild	
	F10558	† Fairchild	
	MC10158	Motorola	
	MC10558	† Motorola	
	~~**MC10H158**~~	~~**Motorola**~~	~~**(821)**~~
	10158	**Signetics**	**(858)**
8 to 1	F10164	Fairchild	
	F10564	† Fairchild	
	HD10164	Hitachi	
	MC10164	Motorola	
	MC10564	† Motorola	
	MC10H164	**Motorola**	**(821)**
	10164	**Signetics**	**(858)**
	SN10164	TI	

Multivibrators

Function	Device	Source	
Monostable	MC10198	Motorola	

Shift Registers

Function	Device	Source	
4-Bit	F10000C	Fairchild	
4-Bit Universal	F10141	Fairchild	
	F10541	† Fairchild	
	MC10141	Motorola	
	MC10541	† Motorola	
	MC10H141	**Motorola**	**(821)**
	10141	**Signetics**	**(858)**

Translators

Function	Device	Source	
Dual ECL to MOS/TTL			
	MC75358	Motorola	
Triple ECL to NMOS			
	F10177	Fairchild	
	MC10177	Motorola	
Quad Differential Receiver/MST to ECL			
	MC10190	Motorola	
	MC10590	† Motorola	
Quad ECL to TTL			
	MC10H350	**Motorola**	**(821)**
Quad ECL to TTL (differential input)			
	F10125	Fairchild	
	F10525	† Fairchild	
	HD10125	Hitachi	
	MC10125	Motorola	
	MC10525	† Motorola	
	MC10H125	**Motorola**	**(821)**
	10125	**Signetics**	**(858)**
Quad TTL to ECL			
	MC10H424	**Motorola**	**(821)**
Quad TTL to ECL OR/NOR			
	F10124	Fairchild	
	F10524	† Fairchild	
	HD10124	Hitachi	

(Continued)

Function	Device	Source	
Quad TTL to ECL OR/NOR			(Cont'd)
	MC10124	Motorola	
	MC10524	† Motorola	
	MC10H124	**Motorola**	**(821)**
	10124	**Signetics**	**(858)**
Hex ECL to MST			
	MC10191	Motorola	
	MC10591	† Motorola	

Miscellaneous

Function	Device	Source	
Active Terminator			
	F10014C	Fairchild	
	F10014M	† Fairchild	
Error Detection/Correction Circuit			
	MC10163	Motorola	
	MC10193	Motorola	
	MC10563	† Motorola	
	MC10593	† Motorola	
	MC10905	**Motorola**	**(4796)**
Micro-Code Sequencer			
	MC10904	**Motorola**	**(4796)**
Dual Bus Driver/Receiver with 4-to-1 Output Multiplexers			
	MC10H332	**Motorola**	**(821)**
Dual Simultaneous Bus Transceiver			
	MC10194	Motorola	
	MC10594	† Motorola	
Triple Differential Line Receiver			
	F10114	Fairchild	
	F10116	Fairchild	
	F10514	† Fairchild	
	F10516	† Fairchild	
	HD10116	Hitachi	
	MC10114	Motorola	
	MC10116	Motorola	
	MC10216	Motorola	
	MC10514	† Motorola	
	MC10516	† Motorola	
	MC10616	† Motorola	
	MC10H116	**Motorola**	**(821)**
	DM10116	National	
	10114	**Signetics**	**(858)**
	10116	**Signetics**	**(858)**
	10216	**Signetics**	**(858)**
Quad Bus Driver/Receiver with Transmit and Receiver Latches	**MC10H334**	**Motorola**	**(821)**
Quad Bus Driver/Receiver with 2-to-1 Output Multiplexers			
	MC10H330	**Motorola**	**(821)**
Quad Bus Receiver			
	MC10129	Motorola	
	10129	**Signetics**	**(858)**
Quad Differential Line Receiver			
	F10115	Fairchild	
	F10515	† Fairchild	
	MC10115	Motorola	
	MC10515	† Motorola	
	MC10H115	**Motorola**	**(821)**
	10115	**Signetics**	**(858)**
Two Modulus Prescaler, Divide by 20/21			
	MC12019	Motorola	
8-Input Priority Encoder			
	F10165	Fairchild	
	F10565	† Fairchild	
	HD10165	Hitachi	
	MC10165	Motorola	
	MC10565	† Motorola	
	MC10H165	**Motorola**	**(821)**
	10165	**Signetics**	**(858)**
9-Bit Parity Circuit (2 carry inputs)			
	F10570	† Fairchild	
	MC10170	Motorola	

† Military Temperature Range (−55° to 125°C)

* Typical Value

Bold face indicates additional data is provided on the page noted.

© IC MASTER 1984

DIGITAL–ECL (Cont'd)

10000 Series Miscellaneous (Cont'd)

Function	Device	Source	Line
12-Bit Parity Generator/Checker			
	F10160	Fairchild	
	F10560	† Fairchild	
	HD10160	Hitachi	
	MC10160	Motorola	
	MC10560	† Motorola	5
	MC10H160	**Motorola**	**(821)**
	10160	**Signetics**	**(858)**

100K Series Arithmetic Functions

Function	Device	Source	Line
Look Ahead Carry Circuit			
	F100179	Fairchild	
	HD100179	Hitachi	
2x8-Bit Recode Multiplier			
	F100183	Fairchild	10
4-Bit Binary/Decade Logic Unit			
	F100181	Fairchild	
	HD100181	Hitachi	
	100181	**Signetics**	**(858)**
6-Bit Adder	F100180	Fairchild	
	100180	**Signetics**	**(858)** 15
9-Bit Comparator			
	F100166	Fairchild	
	HD100166	Hitachi	
	100166	**Signetics**	**(858)**
9-Bit Wallace Tree Adder			
	F100182	Fairchild	

Buffers

Function	Device	Source	Line
9-Bit	F100122	Fairchild	20
	HD100122	Hitachi	
	100122	**Signetics**	**(858)**

Counters

Function	Device	Source	Line
Divide by 4 Frequency Divider			
	SAB1034	**Signetics**	**(858)**
	SAB1534	**Signetics**	**(858)**
	SAF1034	**Signetics**	**(858)** 25
	SAF1534	**Signetics**	**(858)**
Multipurpose Counting Register			
	F100136	Fairchild	
	HD100136	Hitachi	
	100136	**Signetics**	**(858)**

Decoders

Function	Device	Source	Line
Universal	F100170	Fairchild	30
	HD100170	Hitachi	
	100170	**Signetics**	**(858)**

Drivers

Function	Device	Source	Line
Backplane	F100126	Fairchild	
	100126	**Signetics**	**(858)**
High Speed Line			
	F100113	Fairchild	35
	100113	**Signetics**	**(858)**
Quad	F100112	Fairchild	
	HD100112	Hitachi	
	100112	**Signetics**	**(858)**
Hex Bus	F100123	Fairchild	40
	HD100123	Hitachi	
	100123	**Signetics**	**(858)**

Flip-Flops, D-Type

Function	Device	Source	Line
Triple	F100131	Fairchild	
	HD100131	Hitachi	
	100131	**Signetics**	**(858)** 45
Hex	F100151	Fairchild	
	HD100151	Hitachi	
	100151	**Signetics**	**(858)**

Gates, AND-OR-Invert

Function	Device	Source	Line
Triple	F100117	Fairchild	
	HD100117	Hitachi	50
	100117	**Signetics**	**(858)**
5-Wide	F100118	Fairchild	
	HD100118	Hitachi	
	100118	**Signetics**	**(858)**

Gates, OR/NOR

Function	Device	Source	Line
Triple 5-Input	F100101	Fairchild	55
	HD100101	Hitachi	
	100101	**Signetics**	**(858)**
Quintuple 2-Input			
	F100102	Fairchild	
	HD100102	Hitachi	
	100102	**Signetics**	**(858)** 60

Gates, Exclusive OR/NOR

Function	Device	Source	Line
Quintuple	F100107	Fairchild	
	HD100107	Hitachi	
	100107	**Signetics**	**(858)**

Latches

Function	Device	Source	Line
Triple D	F100130	Fairchild	
	HD100130	Hitachi	65
Hex D	F100150	Fairchild	
	HD100150	Hitachi	
	100150	**Signetics**	**(858)**

Memories

Function	Device	Source	Line
CAM (4x4)	F100142	Fairchild	
	HD100142	Hitachi	70
PROM (256x4)	F100416	Fairchild	
	F100Z416	Fairchild	
RAM (16x4)	F100402	Fairchild	
RAM (16x4 register file)			
	F100145	Fairchild	
	HD100145	Hitachi	75
RAM (16x8 or 64x2)			
	SH100B396	Siemens	
RAM (256x1)	F100414	Fairchild	
RAM (256x4)	F100422	Fairchild	
	MBM100422A-7	Fujitsu	
RAM (1024x1)	F100415	Fairchild	80
RAM (1024x4)	F100474	Fairchild	
	MBM100474	Fujitsu	
	100474	Signetics	
	100474A	Signetics	
RAM (4096x1)	F100470	Fairchild	85
	MBM100470	Fujitsu	
	MBM100470A-10	Fujitsu	
RAM (16384x1)	F100480	Fairchild	

Multiplexers (Digital)

Function	Device	Source	Line
Universal (nine 4/1)			
	SH100B384	Siemens	
Dual 8-Input	F100163	Fairchild	90
	HD100163	Hitachi	
	100163	**Signetics**	**(858)**
Triple 4-Input	F100171	Fairchild	
	HD00171	Hitachi	
	100171	**Signetics**	**(858)** 95
Quad 2-Input with Latch			
	F100155	Fairchild	
	HD100155	Hitachi	
	100155	**Signetics**	**(858)**
16-Input	F100164	Fairchild	
	HD100164	Hitachi	100
	100164	**Signetics**	**(858)**

Shift Registers

Function	Device	Source	Line
Mask-Merge	F100156	Fairchild	
	HD100156	Hitachi	
8-Bit Matrix	F100158	Fairchild	
	HD100158	Hitachi	105
	100158	**Signetics**	**(858)**
8-Bit Universal	F100141	Fairchild	
	HD100141	Hitachi	
	100141	**Signetics**	**(858)**

Translators

Function	Device	Source	Line
TTL-100K ECL	F100124	Fairchild	110
	HD100124	Hitachi	
100K ECL-TTL	F100125	Fairchild	
	HD100125	Hitachi	
	100175	**Signetics**	**(858)**
100K ECL-TTL and TTL-100K ECL			
	100255	**Signetics**	**(858)** 115

Miscellaneous

Function	Device	Source	Line
Address and Data Interface Unit			
	F100220	Fairchild	
Bidirectional Shifter			
	SH100B419	Siemens	
Clock Pulse Generator			
	SH100B392	Siemens	
Comparator and Multiplexer			
	SH100B402	Siemens	
ECL/TTL Bus Transceiver			
	SH100255	Siemens	120
Error Correction Circuit			
	SH100B404	Siemens	
Interface Transceiver			
	SH100B250	Siemens	
Micro Program Sequencer			
	F100224	Fairchild	
Multi-Function Network			
	F100221	Fairchild	
Program Interface Unit			
	F100223	Fairchild	125
Programmable Timer/Counter			
	SH100B395	Siemens	
Register File with Ring Shifter			
	SH100B420	Siemens	
Register File with Shift Logic			
	SH100B393	Siemens	
Universal Priority Encoder			
	F100165	Fairchild	
	HD100165	Hitachi	130
	100165	**Signetics**	**(858)**
Universal Register File			
	SH100B417	Siemens	

† Military Temperature Range (−55° to 125°C)

* Typical Value

Bold face indicates additional data is provided on the page noted.

DIGITAL-ECL (Cont'd)

Function	Device	Source	Line
100K Series			
Miscellaneous (Cont'd)			
Dual Access Stack			
	F100222	Fairchild	
Dual Line Transmitter and Receiver			
	SH100B252	Siemens	
Dual Sequencer for SH100B480			
	SH100B481	Siemens	
Dual 9-Bit Parity Generator/Checker			
	F100160	Fairchild	
	HD100160	Hitachi	5
	100160	**Signetics**	**(858)**
Quintuple Line Receiver			
	F100114	Fairchild	
	HD100114	Hitachi	
	100114	**Signetics**	**(858)**
Quintuple Transceiver			
	F100194	Fairchild	10
Nine Buffered Gates			
	SH100B122	Siemens	
4-Bit Microprocessor Slice			
	SH100B480	Siemens	
III and Other Series			
Counters			
Bi-Quinary	MC1678	Motorola	
Divide by 4 Prescaler (1 GHz)			
	MC1697	Motorola	
	MC1699	Motorola	15
Divide by 4 (1 GHz)			
	11C05C	Fairchild	
	11C05M	† Fairchild	
	SP8610	Plessey	
	SP8611A	Plessey	
	SP8612B (1.8GHz)	**Plessey**	**(3561)** 20
	SP8617B	Plessey	
	CA3199	**RCA**	**(3603)**
Divide by 5/6 Prescaler, 650 MHz			
	11C91C	Fairchild	
	11C91M	† Fairchild	
Divide by 10/11 Prescaler, 650 MHz			
	11C90C	Fairchild	25
	11C90M	† Fairchild	
	SP8680	Plessey	
Divide by 20 Prescaler			
	CA3232	RCA	
Divide by 256 Prescaler			
	CA3211	**RCA**	**(3603)**
Binary	MC1654	Motorola	30
Flip-Flops, D-Type			
Master-Slave	11C70C	Fairchild	
	MC1670	Motorola	
	SP1670B	Plessey	
Master-Slave (UHF prescaler)			
	11C06C	Fairchild	
	11C06M	† Fairchild	35
	MC1690	Motorola	
Flip-Flops, R-S Type			
Dual, Clocked	MC1666	Motorola	
Gates, OR			
Quad 2-Input	MC1664	Motorola	
Gates, NOR			
Quad 2-Input	MC1662	Motorola	
Gates, OR/NOR			
Dual 4-Input	MC1660	Motorola	40
	SP1660B	Plessey	
	SP16F60	Plessey	
Dual 4-5 Input	11C01C	Fairchild	
	MC10H209	**Motorola**	**(821)**
	MC1688	Motorola	45
Gates, Exclusive OR			
Triple 2-Input	MC1672	Motorola	
Gates, Exclusive NOR			
Triple 2-Input	MC1674	Motorola	
Latches			
Dual Clocked	MC1668	Motorola	
Multivibrators			
Voltage Controlled			
	MC1658	Motorola	
	SP1658	Plessey	50
Shift Registers			
4-Bit	MC1694	Motorola	
Miscellaneous			
Voltage Controlled Oscillator			
	MC1648	Motorola	
	MC1648M	† Motorola	
	SP1648	Plessey	
Dual Analog/Digital Comparator			
	MC1650	Motorola	55
	MC1651	Motorola	
	SP1650B	Plessey	
Quad Line Receiver			
	MC1692	Motorola	
	SP1692B	Plessey	

† Military Temperature Range (−55° to 125°C)

* Typical Value

Bold face indicates additional data is provided on the page noted.

© IC MASTER 1984

DIGITAL–HNIL/HTL

Function	Device	Source	Line
Arithmetic Functions			
4-Bit Comparator			
	343A/C	TeledyneS	
	343B/M	† TeledyneS	
Buffers/Inverters			
See also: Gates, Miscellaneous			
Hex Open Collector			
	MC678	Motorola	
	MC681	Motorola	5
	MC689	Motorola	
Hex Strobed, Open Collector			
	334A/C	TeledyneS	
Hex Strobed	MC677	Motorola	
	FZH201	Siemens	
	FZH205	Siemens	10
	335A/C	TeledyneS	
Hex	MC680	Motorola	
	MC690	Motorola	
	MC697	Motorola	
	332A/C	TeledyneS	15
	332B/M	† TeledyneS	
Inverters			
Hex Open Collector			
	MC678	Motorola	
Counters, Binary			
Binary Up/Down			
	374A/C	TeledyneS	
Binary	MC685	Motorola	
	FZJ151A	Siemens	20
	FZJ155A	Siemens	
	372A/C	TeledyneS	
	372B/M	† TeledyneS	
Counters, Decade			
Decade, Synchronous			
	FZJ141A	Siemens	
	FZJ145A	Siemens	25
Decade Up/Down			
	373A/C	† TeledyneS	
	373B/M	† TeledyneS	
Decade	MC684	Motorola	
	371A/C	TeledyneS	
	371B/M	† TeledyneS	30
Decoders			
BCD to Decimal, Open Collector			
	381A/C	TeledyneS	
	381B/M	† TeledyneS	
Decoders/Drivers			
BCD to Decimal Decoder/Lamp Driver, Open Collector			
	380B/M	† TeledyneS	
BCD to Decimal (for gas discharge display tubes)			
	MC676	Motorola	
	382A/C	TeledyneS	35
	382B/M	† TeledyneS	
BCD to Seven Segment			
	383A/C	TeledyneS	
	383B/M	† TeledyneS	
Quad 2-Input Power, Open Collector			
	302A/C	TeledyneS	
	302B/M	† TeledyneS	40
Drivers			
BCD to Decimal Decoder/Lamp Driver, Open Collector			
	380A/C	TeledyneS	
Dual Power and Driver, Open Collector and Open Emitter (schmitt trigger)			
	MC699	Motorola	
Dual 4-Input Line Driver, Expandable			
	MC662	Motorola	
Dual 5-Input Power NAND Driver			
	301A/C	TeledyneS	
	301B/M	† TeledyneS	45
Flip-Flops, D-Type			
Quad	FZJ131	Siemens	
	FZJ135	Siemens	
	370A/C	TeledyneS	
	370B/M	† TeledyneS	
Flip-Flops, J-K Type			
Master-Slave or Reset			
	FZJ121	Siemens	50
	FZJ125	Siemens	
	311A/C	TeledyneS	
	311B/M	† TeledyneS	
Master-Slave with N-Inputs on Master and Slave Sections			
	FZJ111	Siemens	
	FZJ115	Siemens	55
Master-Slave with 2 J,K Inputs and N-Input			
	FZJ101	Siemens	
	FZJ105	Siemens	
Dual or Set-Reset			
	MC688	Motorola	
	312A/C	TeledyneS	
	312B/M	† TeledyneS	60
	313A/C	TeledyneS	
	313B/M	† TeledyneS	
Dual with Reset			
	MC663	Motorola	
Flip-Flops, R-S Type			
Master-Slave	MC664	Motorola	
Gates, AND			
Dual 2-Input Interface Buffer			
	391	TeledyneS	65
Dual 4-Input Interface Buffer			
	390	TeledyneS	
Quad 2-Input with N-Input			
	FZH251	Siemens	
	FZH255B	Siemens	
Gates, NAND			
Dual 2-Input and Quad Inverter			
	FZH261	Siemens	
	FZH265B	Siemens	70
Dual 2-Input Interface Buffer			
	392	TeledyneS	
Dual 4-Input Interface Buffer			
	395	TeledyneS	
Dual 4-Input with Extension Input and N-Input			
	FZH171	Siemens	
	FZH175	Siemens	
Dual 4-Input	MC660	Motorola	75
	MC661	Motorola	
Dual 5-Input	FZH121	Siemens	
	FZH125	Siemens	
	FZH131	Siemens	
		(Continued)	
Dual 5-Input		(Cont'd)	
	FZH135	Siemens	80
	FZH141	Siemens	
	FZH145	Siemens	
	FZH231	Siemens	
	FZH235	Siemens	
	322A/C	TeledyneS	85
	322B/M	† TeledyneS	
Triple 3-Input	MC670	Motorola	
	MC671	Motorola	
	FZH191	Siemens	
	FZH195	Siemens	90
Quad 2-Input, Open Collector			
	323A/C	TeledyneS	
	323B/M	† TeledyneS	
Quad 2-Input (Schmitt trigger)			
	MC693	Motorola	
Quad 2-Input with Collector and N-Input			
	FZH211	Siemens	
	FZH215B	Siemens	95
Quad 2-Input	MC668	Motorola	
	MC672	Motorola	
	FZH101A	Siemens	
	FZH105A	Siemens	
	FZH111A	Siemens	100
	FZH115B	Siemens	
	303A/C	TeledyneS	
	303B/M	† TeledyneS	
	321A/C	TeledyneS	
	321B/M	† TeledyneS	105
	324A/C	TeledyneS	
	324B/M	† TeledyneS	
2,2,3,3-Input	325A/C	TeledyneS	
	325B/M	TeledyneS	
	326A/C	TeledyneS	110
	326B/M	TeledyneS	
4, 3, 4-Input	304A/C	TeledyneS	
	304B/M	† TeledyneS	
Gates, AND-OR-Invert			
Expandable	344A/C	TeledyneS	
Dual 2-Wide, 2-Input			
	MC673	Motorola	115
	MC674	Motorola	
	341A/C	TeledyneS	
	341B/M	† TeledyneS	
Gates, OR			
Dual 2-Input Interface Buffer			
	393	TeledyneS	
Quad 2-Input	FZH291	Siemens	120
	FZH295B	Siemens	
Gates, NOR			
Dual 2-Input Interface Buffer			
	394	TeledyneS	
Quad 2-Input, Open Collector			
	307A/C	TeledyneS	
Quad 2-Input with Destruction Protection			
	FZH301	Siemens	
	FZH305	Siemens	125
Quad 2-Input	FZH281	Siemens	
	FZH285B	Siemens	
	306A/C	TeledyneS	

† Military Temperature Range (−55° to 125°C)

* Typical Value

Bold face indicates additional data is provided on the page noted.

DIGITAL–HNIL/HTL (Cont'd)

Function	Device	Source	Line
Gates, Exclusive OR			
Dual 2-Wide, 2-Input AND-OR-Invert, Expandable			
	MC683	Motorola	
	FZH271	Siemens	
	FZH275	Siemens	
Gates, Miscellaneous			
Dual 4-Input Expander (for 600 series)			
	MC669	Motorola	
Dual 5-Input Expander (for 300 series)			
	331A/C	TeledyneS	5
	331B/M	† TeledyneS	
Hex Inverter/Gate (quad inverter, dual NAND)			
	333A/C	TeledyneS	
	333B/M	† TeledyneS	
Latches			
Quad	MC682	Motorola	
Multiplexers (Digital)			
Dual 4-Bit	351A/C	TeledyneS	10
8-Bit	350A/C	TeledyneS	
Multivibrators			
Dual Monostable			
	MC667	Motorola	
	342A/C	TeledyneS	
	342B/M	† TeledyneS	
Dual Retriggerable Monostable			
	347A/C	TeledyneS	15
	347B/M	† TeledyneS	
Shift Registers			
4-Bit Parallel-In Parallel-Out			
	MC686	Motorola	
	375A/C	TeledyneS	
	375B/M	† TeledyneS	
4-Bit with Set and Reset inputs			
	FZJ161	Siemens	20
	FZJ166	Siemens	
Translators			
Level Converter and Driver			
	FZH211S	Siemens	
LSL-TTL Level Converter			
	FZH161	Siemens	
	FZH165B	Siemens	
TTL-LSL Level Converter			
	FZH181	Siemens	25
	FZH185	Siemens	
Dual High to Low Interface (HNL to DTL, TTL)			
	361A/C	TeledyneS	
	361B/M	† TeledyneS	
Dual Interface Element, (line driver, receiver, ECL to TTL, MOS to TTL, Schmitt trigger)			
	MC696	Motorola	
	396AC	TeledyneS	30
Dual Low to High Interface (TTL to HNL)			
	362A/C	TeledyneS	
	362B/M	† TeledyneS	
Triple High to Low (HTL to TTL)			
	MC665	Motorola	
Triple Low to High (TTL to HTL)			
	MC666	Motorola	
Quad Low to High Interface (TTL to HNL)			
	363A/C	TeledyneS	35
	363B/M	† TeledyneS	
Hex Inverter/Interface (low to high: TTL, CMOS to HTL, CMOS)	MC691	Motorola	
Miscellaneous			
Timer (see also linear-timers)			
	355A/C	TeledyneS	
Timing Circuit	FZK101	Siemens	
	FZK105	Siemens	40
Dual Pulse Stretcher			
	MC675	Motorola	
	349A/C	TeledyneS	
Dual 4-Input NAND Schmitt Trigger with Extension Input and N-Input	FZH241	Siemens	
	FZH245	Siemens	
Quad Schmitt Trigger/Line Receiver			
	367A/C	TeledyneS	45
	367B/M	† TeledyneS	
Quad Schmitt Trigger/Line Receiver, Open Collector			
	368A/C	TeledyneS	

† Military Temperature Range (−55° to 125°C)

* Typical Value

Bold face indicates additional data is provided on the page noted.

© IC MASTER 1984

DIGITAL–TTL

Arithmetic Functions

Function	Device	Source	Line
Microprocessor Co-processor Multiplier/Divider (8x8)			
TTL-S	**SN54S508**	**† MMI**	**(810)**
	SN74S508	**MMI**	**(810)**
Adder (natural binary coded decimal)			
TTL	MC4056	Motorola	
	MC4356	† Motorola	
	MC74456	Motorola	5
Adder/Subtractor Quad Serial			
TTL-F	54F385	† Fairchild	
	74F385	Fairchild	
TTL-LS	AM25LS15C	AMD	
	AM25LS15M	† AMD	
	SN54LS385	† AMD	10
	SN74LS385	AMD	
	SN54LS385	† Motorola	
	SN74LS385	Motorola	
	SN54LS385	**† TI**	**(1030)**
	SN74LS385	**TI**	**(1030)**
Adder, 4-Bit BCD			
TTL-S	**N82S83**	**† Signetics**	**(876)**
Arithmetic Unit, Floating Point			
TTL	**TDC1022**	**† TRW-LSI**	**(1162)**
	TDC1022	TRW-LSI	
	WTL1032	Weitek	
	WTL1033	Weitek	20
Barrel Shifter, 16-Bit, Expandable			
TTL-AS	**SN54AS897**	**† TI**	**(1113)**
	SN74AS897	**TI**	**(1113)**
Comparator, Address			
TTL-ALS	**SN54ALS677**	**† TI**	**(1083)**
	SN54ALS678	**† TI**	**(1083)**
	SN54ALS679	**† TI**	**(1084)** 25
	SN54ALS680	**† TI**	**(1084)**
	SN74ALS677	**TI**	**(1083)**
	SN74ALS678	**TI**	**(1083)**
	SN74ALS679	**TI**	**(1084)**
	SN74ALS680	**TI**	**(1084)** 30
Comparator, Registered			
TTL-F	54F524	† Fairchild	
	74F524	† Fairchild	
	74F524	**† Signetics**	**(879)**
Comparator, Dual 4-Bit Magnitude			
TTL	MC4021	Motorola	
	MC4022	Motorola	35
	MC4321	† Motorola	
	MC4322	† Motorola	
Comparator, 4-Bit Magnitude			
TTL	DM7200	† National	
	DM8200	National	
	TD3502A	Toshiba	40
Comparator, 4-Bit Magnitude, Separate A=B Output			
TTL	5485	† Fairchild	
	54LS85	† Fairchild	
	7485	Fairchild	
	74LS85	Fairchild	
	9324C	Fairchild	45
	9324M	† Fairchild	
	ZN5485	† Ferranti	
	ZN7485	Ferranti	
	HD7485	Hitachi	
	HD74LS85	Hitachi	50
	MC7485	Motorola	
	MC8324	Motorola	
	MC9324	† Motorola	
	SN54LS85	† Motorola	
	SN74LS85	Motorola	55
	DM5485	† National	
	DM54LS85	† National	
	DM7485	National	
	DM74LS85	National	
		(Continued)	

Function	Device	Source	Line
Comparator, 4-Bit Magnitude, Separate A=B Output			
TTL		(Cont'd)	
	DM74LS85	**Panasonic (826,834)**	60
	54LS85	† SGS	
	74LS85	SGS	
	5485	**† Signetics (528,860)**	
	54LS85	**† Signetics (529)**	
	7485	**Signetics (860)**	65
	74LS85	Signetics	
	N9324	**Signetics (876)**	
	SN5485	**† TI (950)**	
	SN54LS85	**† TI (950)**	
	SN7485	**TI (950)**	70
	SN74LS85	**TI (950)**	
TTL-F	**74F85**	**Signetics (879)**	
TTL-L	**SN54L85**	**† TI (950)**	
TTL-S	**54S85**	**† Signetics (531)**	
	74S85	Signetics	75
	SN54S85	**† TI (950)**	
	SN74S85	**TI (950)**	
Comparator, 6-Bit Identity			
TTL	DM7160	† National	
	DM8160	National	
TTL-S	93546M	† Fairchild	80
	93S46C	Fairchild	
Comparator, 6-Bit Identity, Open Collector			
TTL-S	93S47C	Fairchild	
	93S47M	† Fairchild	
Comparator, 6-Bit, Unified Bus, Active Pull Up			
TTL	DM7131	† National	
	DM8131	National	85
Comparator, 6-Bit, Unified Bus, Open Collector			
TTL	DM7136	† National	
	DM8136	National	
Comparator, 8-Bit			
TTL-ALS	**SN54ALS520**	**† TI (1044)**	
	SN54ALS521	**† TI (1044)**	
	SN54ALS522	**† TI (1044)**	90
	SN74ALS520	**TI (1044)**	
	SN74ALS521	**TI (1044)**	
	SN74ALS522	**TI (1044)**	
TTL-F	54F521	† Fairchild	
	74F521	Fairchild	95
	MC54F521	**† Motorola (822)**	
	MC74F521	**Motorola (822)**	
	54F521	† Signetics	
	74F521	**Signetics (879)**	
TTL-LS	**AM25LS2521C**	**AMD (1427)**	100
	AM25LS2521M	**† AMD (1427)**	
Comparator, 8-Bit Identity, Fuse Programmable plus 4-Bit Comparator			
TTL-ALS	**SN54ALS527**	**† TI (1045)**	
	SN74ALS527	**TI (1045)**	
Comparator, 8-Bit Magnitude Open Collector			
TTL-ALS	**SN54ALS518**	**† TI (1044)**	
	SN54ALS519	**† TI (1044)**	105
	SN54ALS689	**† TI (1088)**	
	SN74ALS518	**TI (1044)**	
	SN74ALS519	**TI (1044)**	
	SN74ALS689	**TI (1088)**	
TTL-LS	SN54LS683	† Motorola	110
	SN54LS685	† Motorola	
	SN54LS687	† Motorola	
	SN54LS689	† Motorola	
	SN74LS683	Motorola	
	SN74LS685	Motorola	115
	SN74LS687	Motorola	
	SN74LS689	Motorola	
	SN54LS683	**† TI (1086)**	
		(Continued)	

Function	Device	Source	Line
Comparator, 8-Bit Magnitude Open Collector			
TTL-LS		(Cont'd)	
	SN54LS685	**† TI (1086)**	
	SN54LS687	**† TI (1087)**	120
	SN54LS689	**† TI (1088)**	
	SN74LS683	**TI (1086)**	
	SN74LS685	**TI (1086)**	
	SN74LS687	**TI (1087)**	
	SN74LS689	**TI (1088)**	125
Comparator, 8-Bit Magnitude Totem-Pole			
TTL-ALS	**SN54ALS688**	**† TI (1088)**	
	SN74ALS688	**TI (1088)**	
TTL-AS	**SN54AS885**	**† TI (1110)**	
	SN74AS885	**TI (1110)**	
TTL-LS	SN54LS682	† Motorola	130
	SN54LS684	† Motorola	
	SN54LS686	† Motorola	
	SN54LS688	† Motorola	
	SN74LS682	Motorola	
	SN74LS684	Motorola	135
	SN74LS686	Motorola	
	SN74LS688	Motorola	
	74LS684	Signetics	
	SN54LS682	**† TI (1086)**	
	SN54LS684	**† TI (1086)**	140
	SN54LS686	**† TI (1087)**	
	SN54LS688	**† TI (1088)**	
	SN74LS682	TI	
	SN74LS684	**TI (1086)**	
	SN74LS686	**TI (1087)**	145
	SN74LS688	**TI (1088)**	
Comparator, 10-Bit Identity			
TTL	DM7130	† National	
	DM8130	National	
Comparator, 12-Bit Identity, Fuse Programmable			
TTL-ALS	**SN54ALS528**	**† TI (1046)**	
	SN74ALS528	**TI (1046)**	150
Comparator, 16-Bit Identity, Fuse Programmable			
TTL-ALS	SN54ALS526	† TI	
	SN74ALS526	TI	
Correlator (continually compares two independently clocked serial inputs and give correlation output)			
	TDC1028	† TRW-LSI	
Correlator (continually compares two independently clocked serial inputs and gives correlation output)			
	TDC1004	† TRW-LSI	
	TDC1023	† TRW-LSI	155
Fast Carry Extender (for 8260)			
TTL	MC7261	Motorola	
	MC8261	† Motorola	
	RC8261	Raytheon	
	RM8261	† Raytheon	
Full Adder, Gated			
TTL	5480	† Fairchild	160
	MC7480	Motorola	
	SN5480	**† TI (948)**	
	SN7480	**TI (948)**	
Full Adder, BCD with Fast Carry			
	54F583	† Fairchild	
	74F583	Fairchild	165
Full Adder, Dual			
TTL	9304C	Fairchild	
	9304M	† Fairchild	
	MC8304	Motorola	
	MC9304	Motorola	
TTL-H	54H183	† Fairchild	170
	74H183	Fairchild	
	HD74H183	Hitachi	
	SN54H183	**† TI (986)**	
	SN74H183	**TI (986)**	
TTL-LS	SN54LS183	† Motorola	175
		(Continued)	

† Military Temperature Range (−55° to 125°C)

* Typical Value

Bold face indicates additional data is provided on the page noted.

DIGITAL–TTL (Cont'd)

Arithmetic Functions (Cont'd)

Function	Device	Source	Line
Full Adder, Dual			
TTL-LS		(Cont'd)	
	SN74LS183	Motorola	
	SN54LS183	**† TI**	**(986)**
	SN74LS183	**TI**	**(986)**
Full Adder, 2-Bit Binary			
TTL	5482	† Fairchild	
	7482	Fairchild	5
	ZN5482	† Ferranti	
	ZN7482	Ferranti	
	MC7482	Motorola	
	SN5482	**† TI**	**(948)**
	SN7482	**TI**	**(948)** 10
Full Adder, 4-Bit with Output Latch			
TTL	AM2506C	AMD	
	AM2506M	† AMD	
Logic Element			
TTL	MC7260	Motorola	
	MC8260	† Motorola	
	RC8260	Raytheon	15
	RM8260	† Raytheon	
Logic Unit/Function Generator			
TTL	54181	† Fairchild	
	9341C	Fairchild	
	9341M	† Fairchild	
	ZN54181	† Ferranti	20
	MC74181	Motorola	
	DM54181	† National	
	54181	**† Signetics**	**(861)**
	74181	**Signetics**	**(861)**
	SN54181	**† TI**	**(985)** 25
	SN74181	**TI**	**(985)**
TTL-AS	**SN54AS181A**	**† TI**	**(985)**
	SN54AS881A	**† TI**	**(1109)**
	SN74AS181A	**TI**	**(985)**
	SN74AS881A	**TI**	**(1109)** 30
TTL-F	**54F181**	**† Fairchild**	**(718)**
	54F381	† Fairchild	
	54F382	† Fairchild	
	74F181	**Fairchild**	**(718)**
	74F381	Fairchild	35
	74F382	Fairchild	
	MC54F181	**† Motorola**	**(822)**
	MC54F381	**† Motorola**	**(822)**
	MC54F382	**† Motorola**	**(822)**
	MC74F181	**Motorola**	**(822)** 40
	MC74F381	**Motorola**	**(822)**
	MC74F382	**Motorola**	**(822)**
	54F181	† Signetics	
	74F181	**Signetics**	**(879)**
TTL-LS	**AM25LS2517C**	**AMD**	**(1427)** 45
	AM25LS2517M	**AMD**	**(1427)**
	54LS181	† Fairchild	
	74LS181	Fairchild	
	HD74LS181	Hitachi	
	SN54LS181	† Motorola	50
	SN74LS181	Motorola	
	54LS181	† SGS	
	74LS181	SGS	
	54LS181	† Signetics	
	74LS181	Signetics	55
	SN54LS181	**† TI**	**(985)**
	SN54LS381	**† TI**	**(1028)**
	SN54LS382	**† TI**	**(1029)**
	SN74LS181	**TI**	**(985)**
	SN74LS381	**TI**	**(1028)** 60
	SN74LS382	**TI**	**(1029)**
TTL-S	93S41C	Fairchild	
	93S41M	† Fairchild	
	HD74S181	Hitachi	
		(Continued)	

Function	Device	Source	Line
Logic Unit/Function Generator			
TTL-S		(Cont'd)	
	SN54S381	**† MMI**	**(819)** 65
	SN74S381	**† MMI**	**(819)**
	54S181	**† Signetics**	**(531)**
	74S181	Signetics	
	SN54S181	**† TI**	**(985)**
	SN54S381	**† TI**	**(1028)** 70
	SN74S181	**TI**	**(985)**
	SN74S381	**† TI**	**(1028)**
Look-Ahead Carry Generator			
TTL	54182	† Fairchild	
	9342C	Fairchild	
	9342M	† Fairchild	75
	HD74182	Hitachi	
	MC74182	Motorola	
	DM54182	† National	
	DM74182	National	
	SN54182	**† TI**	**(986)** 80
	SN74182	**TI**	**(986)**
TTL-AS	**SN54AS182**	**† TI**	**(986)**
	SN54AS264	**† TI**	**(1006)**
	SN54AS282	**† TI**	**(1010)**
	SN54AS882	**† TI**	**(1110)** 85
	SN74AS182	**TI**	**(986)**
	SN74AS264	**TI**	**(1006)**
	SN74AS282	**TI**	**(1010)**
	SN74AS882	**TI**	**(1110)**
TTL-F	54F182	† Fairchild	90
	74F182	Fairchild	
	MC54F182	**† Motorola**	**(822)**
	MC74F182	**Motorola**	**(822)**
	74F182	**Signetics**	**(879)**
TTL-LS	SN54LS182	† Motorola	95
	SN74LS182	Motorola	
TTL-S	93S42C	Fairchild	
	93S42M	† Fairchild	
	HD74S182	Hitachi	
	SN54S182	**† MMI**	**(819)** 100
	SN74S182	**MMI**	**(819)**
	DM74S182	National	
	54S182	† Signetics	
	74S182	Signetics	
	SN54S182	**† TI**	**(986)** 105
	SN74S182	**TI**	**(986)**
Multiplier Accumulator (16-bit)			
	TDC1043	**† TRW-LSI**	**(1164,1166)**
Multiplier/Divider (8-Bit, with latch)			
TTL-F	54F559	† Fairchild	
	74F559	† Fairchild	
Multiplier/Divider, 16x16			
	SN54S516	**† MMI**	**(813)** 110
	SN74S516	**MMI**	**(813)**
Multiplier, Unsigned Magnitude, 2's Complement or Mixed Operands, (8x8)			
TTL-S	**AM25S557**	**AMD**	**(701)**
	AM25S558	**AMD**	**(701)**
Multiplier, Unsigned Magnitude (8x8)			
TTL	**MPY08HU**	**† TRW-LSI**	**(1164)**
	MPY08HU	TRW-LSI	115
Multiplier, Binary (2x4) Parallel, Serial Output			
TTL-LS	54LS261	† Signetics	
	SN54LS261	**† TI**	**(1006)**
	SN74LS261	**† TI**	**(1006)**
Multiplier, Binary (4x2)			
TTL	9344M	† Fairchild	
Multiplier, Binary (4x4) Parallel (used with 54/74284)			
TTL	**SN54285**	**† TI**	**(1011)** 120
	SN74285	**TI**	**(1011)**

Function	Device	Source	Line
Multiplier, Binary (4x4) Parallel (used with 54/74285)			
TTL	DM54284	† National	
	SN54284	**† TI**	**(1011)**
	SN74284	**† TI**	**(1011)**
Multiplier, Binary (4x4) Three-State			
TTL-S	**SN54S274**	**† TI**	**(1008)** 125
	SN74S274	**TI**	**(1008)**
Multiplier, 2's Complement & Unsigned Magnitude (12x12), 16-Bit Product			
TTL	**MPY112K**	**† TRW-LSI**	**(1163,1164)**
	MPY112K	TRW-LSI	
Multiplier, 2's Complement and Unsigned Magnitude (12x12)			
TTL	**MPY012H**	**† TRW-LSI**	**(1164)**
	MPY012H	TRW-LSI	130
	MPY012K	† TRW-LSI	
	MPY012K	TRW-LSI	
Multiplier, 2's Complement and Unsigned Magnitude (16x16)			
TTL	**SY66016**	**Synertek**	**(1696)**
	MPY016H	**† TRW-LSI**	**(1164)**
	MPY016H	TRW-LSI	135
	MPY016K	**† TRW-LSI**	**(1164)**
	MPY016K	TRW-LSI	
	MPY16HD	† TRW-LSI	
	MPY16HD	TRW-LSI	
Multiplier, 2's Complement and Unsigned Magnitude (24x24)			
TTL	MPY1024	† TRW-LSI	140
	MPY1024	TRW-LSI	
Multiplier, 2's Complement (12x12)			
TTL	**MPY012A**	**† TRW-LSI**	**(1164)**
	MPY012A	TRW-LSI	
Multiplier, 2's Complement (12x12) with Accumulator (allows unsigned magnitude inputs as well)			
TTL	**TDC1009J**	**TRW-LSI**	**(1164)**
	TDC1009JM	**† TRW-LSI**	**(1164)** 145
Multiplier, 2's Complement (16x16)			
TTL	**MPY016K**	**† TRW-LSI**	**(1165)**
	MPY016K	TRW-LSI	
Multiplier, 2's Complement (16x16. 'H' version allows unsigned magnitude inputs as well)			
TTL	**AM29516**	**AMD**	**(701)**
	AM29517	**AMD**	**(701)**
	AM29L516	AMD	150
	AM29L517	AMD	
Multiplier, 2's Complement (16x16) with Accumulator (allows unsigned magnitude inputs as well)			
TTL	**TDC1010J**	**TRW-LSI**	**(1164)**
	TDC1010JM	**† TRW-LSI**	**(1164)**
Multiplier, 2's Complement (4x2)			
TTL	AM2505C	AMD	
	AM2505M	† AMD	155
	RC2505	Raytheon	
	RM2505	† Raytheon	
TTL-S	AM25S05C	AMD	
	AM25S05M	† AMD	
	93S43C	Fairchild	160
	93S43M	† Fairchild	
Multiplier, 2's Complement (8x8)			
TTL	**MPY008A**	**† TRW-LSI**	**(1164)**
	MPY008A	TRW-LSI	
	MPY008H	**† TRW-LSI**	**(1164)**
	MPY008H	TRW-LSI	165
Multiplier, 2's Complement (8x8)			
TTL	57558	† MMI	
	57558-1	† MMI	
	67558	MMI	
	67558-1	MMI	
		(Continued)	

† Military Temperature Range (−55° to 125°C)

* Typical Value

Bold face indicates additional data is provided on the page noted.

© IC MASTER 1984

DIGITAL–TTL (Cont'd)

Arithmetic Functions (Cont'd)

Function	Device	Source	Line
Multiplier, 2's Complement (8x8) (Cont'd)			
TTL-F	54F558	† Fairchild	
	74F558	Fairchild	
Multiplier, 2's Complement (8x8) with Accumulator (allows unsigned magnitude inputs as well)			
TTL	**TDC1008J**	**TRW-LSI**	**(1164)**
	TDC1008JM	**† TRW-LSI**	**(1164)**
Multiplier, 4-Bit Three-State (two ICs to a set, 7875A and 7875B)			
TTL	DM7875	† National	
	DM8875	National	
Multiplier (8x8), High Speed			
TTL-S	**SN54S557**	**† MMI**	**(816)**
	SN54S558	**† MMI**	**(816)**
	SN74S557	**MMI**	**(816)**
	SN74S558	**MMI**	**(816)**
Multiplier (8x1) Serial/Parallel 2's Complement			
TTL-F	54F384	† Fairchild	
	74F384	Fairchild	
TTL-LS	AM25LS14AC	AMD	
	AM25LS14AM	† AMD	
	AM25LS14C	AMD	
	AM25LS14M	† AMD	
	SN54LS384	† AMD	
	SN74LS384	AMD	
	SN54LS384	**† TI**	**(1029)**
	SN74LS384	**TI**	**(1029)**
Multiplier (8x8), with Latch			
TTL-F	54F557	† Fairchild	
	74F557	Fairchild	
Multiplier, 8-Bit Parallel Byte			
TTL	SBP9708C	TI	
	SBP9708M	† TI	
Multiplier, 8-Bit Serial/Parallel Sequential with Adder/Subtractor			
TTL-F	54F784	† Fairchild	
	74F784	Fairchild	
Multiplier (16x16), Multimode			
TTL-AS	**SN54ALS1616**	**† TI**	**(1121)**
	SN74ALS1616	**TI**	**(1121)**
Multiplier-Accumulator (8x8)			
TTL	**TDC1008**	**† TRW-LSI**	**(1164)**
	TDC1008	TRW-LSI	
Multiplier-Accumulator (12x12)			
TTL	AM29509	AMD	
	AM29L509	AMD	
	TDC1003	**TRW-LSI**	**(1164)**
	TDC1009	**† TRW-LSI**	**(1164)**
	TDC1009	TRW-LSI	
Multiplier-Accumulator (16x16)			
TTL	AM29510	AMD	
	AM29L510	AMD	
	TDC1010	**† TRW-LSI**	**(1164)**
	TDC1010	TRW-LSI	
Register/Arithmetic Logic Unit			
TTL-LS	**SN54LS681**	**† TI**	**(1085)**
	SN74LS681	**TI**	**(1085)**
TTL-S	DM74S281	National	
	SN54S281	**† TI**	**(1010)**
	SN74S281	**TI**	**(1010)**
Binary 1-Hexidecimal Scalers, Multifunction			
TTL-S	SN54AS894	† TI	
	SN74AS894	TI	
Octal, with Parity Generator Checker			
TTL-F	54F582	† Fairchild	
	74F582	Fairchild	

Function	Device	Source	Line
4-Bit Microprocessor Slice (ALU)			
TTL-S	**AM2901AC**	**AMD**	**(1401)**
	AM2901AM	**† AMD**	**(1401)**
	AM2901BC	**AMD**	**(1401)**
	AM2901BM	**† AMD**	**(1401)**
	AM2901C	**AMD**	**(1401)**
	AM2901M	**† AMD**	**(1401)**
	AM2903C	**AMD**	**(1402)**
	AM2903M	**† AMD**	**(1402)**
	AM29203	**AMD**	**(1402)**
	3002	Intel	
	ADM2901AC	National	
	IDM2901AM	† National	
	N3002	**Signetics**	**(1665)**
	S3002	**† Signetics**	**(1665)**
	SN74S481	**TI**	**(1041)**
4-Bit ALU with Look-Ahead Carry			
TTL	9340C	Fairchild	
	9340M	† Fairchild	
4-Bit Binary Full Adder, Look-Ahead Carry			
TTL	54283	† Fairchild	
	5483	† Fairchild	
	74283	Fairchild	
	7483	Fairchild	
	ZN54283A	† Ferranti	
	ZN5483A	† Ferranti	
	ZN74283A	Ferranti	
	ZN7483A	Ferranti	
	HD74283	Hitachi	
	HD7483A	Hitachi	
	MC7483	Motorola	
	DM5483	† National	
	DM7483	National	
	5483	**† Signetics**	**(860)**
	7483	**Signetics**	**(860)**
	SN54283	† TI	
	SN5483A	**† TI**	**(949)**
	SN74283	TI	
	SN7483A	**TI**	**(949)**
TTL-F	54F283	† Fairchild	
	74F283	Fairchild	
	MC54F283	**† Motorola**	**(822)**
	MC74F283	**Motorola**	**(822)**
	74F283	**Signetics**	**(879)**
TTL-LS	54LS283	† Fairchild	
	54LS83	† Fairchild	
	74LS283	Fairchild	
	74LS83	Fairchild	
	HD74LS283A	Hitachi	
	HD74LS83A	Hitachi	
	M74LS283	Mitsubishi	
	SN54LS283	† Motorola	
	SN54LS83A	† Motorola	
	SN74LS283	Motorola	
	SN74LS83A	Motorola	
	DM54LS283	† National	
	DM54LS83A	† National	
	DM74LS283	National	
	DM74LS83A	National	
	DN74LS283	**Panasonic**	**(826,834)**
	DN74LS83A	**Panasonic**	**(826,834)**
	54LS283	† SGS	
	54LS83A	† SGS	
	74LS283	SGS	
	74LS83A	SGS	
	54LS283	† Signetics	
	54LS83A	† Signetics	
	74LS283	Signetics	
	74LS83A	Signetics	
	SN54LS283	**† TI**	**(1011)**
	SN54LS83A	**† TI**	**(949)**
			(Continued)

Function	Device	Source	Line
4-Bit Binary Full Adder, Look-Ahead Carry			
TTL-LS			(Cont'd)
	SN74LS283	**TI**	**(1011)**
	SN74LS83A	**TI**	**(949)**
TTL-S	**SN54S283**	**† TI**	**(1011)**
	SN74S283	**TI**	**(1011)**
4-Bit BCD (add, subtract, compare)			
TTL-S	**N82S82**	**Signetics**	**(876)**
7-Bit Slice Wallace Tree (to build multipliers)			
TTL-LS	**SN54LS275**	**† TI**	**(1008)**
	SN74LS275	**TI**	**(1008)**
TTL-S	**SN54S275**	**† TI**	**(1008)**
	SN74S275	**TI**	**(1008)**
8-Bit Magnitude			
TTL-AS	**SN54AS866**	**† TI**	**(1103)**
	SN74AS866	**TI**	**(1103)**
8-Bit Serial/Parallel Register (for use with 25LS14/74LS384)			
TTL-LS	**AM25LS22C**	**AMD**	**(1427)**
	AM25LS22M	**† AMD**	**(1427)**
	SN54LS322	† AMD	
	SN74LS322	AMD	
	54LS322	† Fairchild	
	SN54LS322	† Motorola	
	SN74LS322	Motorola	
	SN54LS322A	**TI**	**(1018)**
	SN74LS322A	**TI**	**(1018)**

Buffers

Function	Device	Source	Line
Quad Gated, Three-State (inverted control)			
TTL	54126	† Fairchild	
	74126	Fairchild	
	HD74126	Hitachi	
	DM7094	† National	
	DM8094	National	
	54126	**† Signetics**	**(528,861)**
	74126	**Signetics**	**(861)**
	SN54126	**† TI**	**(963)**
	SN54426	**† TI**	**(1034)**
	SN74126	**TI**	**(963)**
	SN74426	**TI**	**(1034)**
TTL-LS	54LS126	† Fairchild	
	74LS126	Fairchild	
	M74LS126A	Mitsubishi	
	SN54LS126A	† Motorola	
	SN74LS126A	Motorola	
	DM54LS126	† National	
	DM74LS126	National	
	54LS126	† SGS	
	74LS126	SGS	
	54LS126A	† Signetics	
	74LS126A	Signetics	
	SN54LS126A	**† TI**	**(962)**
	SN74LS126A	**TI**	**(962)**
Quad Gated, Three-State			
TTL	54125	† Fairchild	
	74125	Fairchild	
	HD74125	Hitachi	
	DM54125	† National	
	DM7093	† National	
	DM74125	National	
	DM8093	National	
	54125	**† Signetics**	**(861)**
	74125	**Signetics**	**(861)**
	SN54125	**† TI**	**(963)**
	SN54425	**† TI**	**(1034)**
	SN74125	**TI**	**(963)**
	SN74425	**TI**	**(1034)**
TTL-LS	54LS125A	† Fairchild	
			(Continued)

† Military Temperature Range (−55° to 125°C)

* Typical Value

Bold face indicates additional data is provided on the page noted.

DIGITAL–TTL (Cont'd)

Buffers (Cont'd)

Function	Device	Source	Line
Quad Gated, Three-State			
TTL-LS		(Cont'd)	
	74LS125	Fairchild	
	M74LS125A	Mitsubishi	
	SN54LS125A	† Motorola	
	SN74LS125A	Motorola	
	DM54LS125A	† National	5
	DM74LS125A	National	
	DN74LS125A	**Panasonic (826,834)**	
	54LS125A	† SGS	
	74LS125A	SGS	
	54LS125A	† Signetics	10
	74LS125A	Signetics	
	SN54LS125A	**† TI (962)**	
	SN74LS125A	**TI (962)**	
Hex Driver, Non-inverting			
TTL-AS	SN54AS1034	† TI	
	SN74AS1034	TI	15
Hex, Noninverter			
TTL-ALS	**SN54ALS34**	**† TI (931)**	
	SN74ALS34	**TI (931)**	
TTL-AS	**SN54AS34**	**† TI (931)**	
	SN74AS34	**TI (931)**	
Hex, Open Collector, Noninverter			
TTL-ALS	**SN54ALS35**	**† TI (931)**	20
	SN74ALS35	**TI (931)**	
Hex, Open Collector			
TTL-ALS	**SN54ALS1035**	**† TI (1118)**	
	SN74ALS1035	**TI (1118)**	
Hex, Three-State			
TTL	DM54365	† National	
	DM54367	† National	25
	DM7095	† National	
	DM7097	† National	
	DM74366	National	
	DM74367	National	
	DM8095	National	30
	DM8097	National	
	54365A	**† Signetics (528,862)**	
	54367A	**† Signetics (528,862)**	
	74365A	**Signetics (862)**	
	74367A	**Signetics (862)**	35
	SN54365A	**† TI (1023)**	
	SN54367A	**† TI (1024)**	
	SN74365A	**TI (1023)**	
	SN74367A	**TI (1024)**	
TTL-ALS	**SN54ALS1034**	**† TI (1118)**	40
	SN54ALS365	**† TI (1023)**	
	SN54ALS367	**† TI (1024)**	
	SN74ALS1034	**TI (1118)**	
	SN74ALS365	**TI (1023)**	
	SN74ALS367	**TI (1024)**	45
TTL-AS	**SN54AS1034**	**† TI (1118)**	
	SN74AS1034	**TI (1118)**	
TTL-F	**54F365**	**† Signetics (885)**	
	54F367	**† Signetics (885)**	
	74F365	**Signetics (879,885)**	50
	74F367	**Signetics (879,885)**	
TTL-LS	54LS365	† Fairchild	
	54LS367	† Fairchild	
	74LS365	Fairchild	
	74LS367	Fairchild	55
	HD74LS365A	Hitachi	
	HD74LS367A	Hitachi	
	M74LS365A	Mitsubishi	
		(Continued)	

Function	Device	Source	Line
Hex, Three-State			
TTL-LS		(Cont'd)	
	M74LS367A	Mitsubishi	
	SN54LS365A	† Motorola	60
	SN54LS367A	† Motorola	
	SN74LS365A	Motorola	
	SN74LS367A	Motorola	
	DM54LS365A	† National	
	DM54LS367A	† National	65
	DM74LS365A	National	
	DM74LS367A	National	
	DN74LS365A	**Panasonic (826,834)**	
	DN74LS367A	**Panasonic (826,834)**	
	54LS365	† SGS	70
	54LS367	† SGS	
	74LS365	SGS	
	74LS367	SGS	
	54LS365A	**† Signetics (530)**	
	54LS367A	**† Signetics (530)**	75
	74LS365A	Signetics	
	74LS367A	Signetics	
	SN54LS365A	**† TI (1023)**	
	SN54LS367A	**† TI (1024)**	
	SN74LS365A	**TI (1023)**	80
	SN74LS367A	**TI (1024)**	
TTL-S	MC8T95	Motorola	
	MC8T97	Motorola	
	N8T95	**Signetics (876)**	
	N8T97	**Signetics (876)**	85
	S8T97	**† Signetics (876)**	
Octal Buffer/Latch, Three-State			
TTL-S	**MC3482**	**Motorola (3063)**	
	MC3482A	**Motorola (3063)**	
	MC3482B	**Motorola (3063)**	
	MC6482	Motorola	90
	MC6482A	Motorola	
	MC6482B	Motorola	
Octal, with Parity Generator-Checker			
TTL-F	**54F656**	**† Signetics (890)**	
	74F656	**Signetics (880,890)**	
Octal, Three-State			
TTL-ALS	**SN54ALS465**	**† TI (1040)**	95
	SN54ALS467	**† TI (1040)**	
	SN74ALS465	**TI (1040)**	
	SN74ALS467	**TI (1040)**	
TTL-LS	SN54LS795	† Motorola	
	SN54LS796	† Motorola	100
	SN54LS797	† Motorola	
	SN54LS798	† Motorola	
	SN74LS795	Motorola	
	SN74LS796	Motorola	
	SN74LS797	Motorola	105
	SN74LS798	Motorola	
	DM71LS95	† National	
	DM71LS97	† National	
	DM81LS95	National	
	DM81LS97	National	110
	SN54LS465	**† TI (1040)**	
	SN54LS467	**† TI (1040)**	
	SN74LS465	**TI (1040)**	
	SN74LS467	**TI (1040)**	
10-Bit (bus interface)			
TTL-S	**AM29827**	**AMD (2804)**	115
	AM29828	**AMD (2804)**	

Inverters

Function	Device	Source	Line
Hex, Open Collector			
TTL	5405	† Fairchild	
	7405	Fairchild	
	ZN5405	† Ferranti	
	ZN7405	Ferranti	120
	HD7405	Hitachi	
	MC7405	Motorola	
	DM5405	† National	
	DM7405	National	
	5405	**† Signetics (860)**	125
	7405	**Signetics (860)**	
	S8T90	† Signetics	
	SN5405	**† TI (921)**	
	SN7405	**TI (921)**	
TTL-ALS	SN54ALS05	† Motorola	130
	SN74ALS05	**Motorola (822)**	
	SN54ALS05	**† TI (921)**	
	SN54ALS1005	**† TI (1115)**	
	SN74ALS05	**TI (921)**	
	SN74ALS1005	**TI (1115)**	135
TTL-H	54H05	† Fairchild	
	74H05	Fairchild	
	DM54H05	† National	
	DM74H05	National	
	SN54H05	† TI	140
	SN74H05	**TI (921)**	
TTL-LS	54LS05	† Fairchild	
	74LS05	Fairchild	
	HD74LS05	Hitachi	
	M74LS05	Mitsubishi	145
	SN54LS05	**† Motorola (822)**	
	SN74LS05	Motorola	
	DM54LS05	† National	
	DM74LS05	National	
	DN74LS05	**Panasonic (826,834)**	150
	54LS05	† SGS	
	74LS05	SGS	
	54LS05	† Signetics	
	74LS05	Signetics	
	SN54LS05	**† TI (921)**	155
	SN74LS05	**TI (921)**	
TTL-S	54S05	† Fairchild	
	74S05	Fairchild	
	HD74S05	Hitachi	
	DM54S05	† National	160
	DM74S05	National	
	54S05	† Signetics	
	74S05	Signetics	
	SN54S05	**† TI (921)**	
	SN74S05	**TI (921)**	165
Hex, Three-State			
TTL	DM54366	† National	
	DM54368	† National	
	DM7096	† National	
	DM7098	† National	
	DM74365	National	170
	DM74368	National	
	DM8096	National	
	DM8098	National	
	54366A	**† Signetics (528,862)**	
	54368A	**† Signetics (528,862)**	175
	74366A	**Signetics (862)**	
	74368A	**Signetics (862)**	
	SN54366A	**† TI (1023)**	
	SN54368A	**† TI (1024)**	
	SN74366A	**TI (1023)**	180
	SN74368A	**TI (1024)**	
		(Continued)	

† Military Temperature Range (−55° to 125°C)

* Typical Value

Bold face indicates additional data is provided on the page noted.

© IC MASTER 1984

DIGITAL–TTL (Cont'd)

Inverters (Cont'd)

Function	Device	Source	Line
Hex, Three-State (Cont'd)			
TTL-ALS	**SN54ALS368**	**† TI**	**(1024)**
	SN74ALS368	**TI**	**(1024)**
TTL-F	**54F368**	**† Signetics**	**(885)**
	74F366	**Signetics**	**(879,885)**
	74F368	**Signetics**	**(879,885)**
TTL-LS	54LS366	† Fairchild	
	54LS368	† Fairchild	
	74LS366	Fairchild	
	74LS368	Fairchild	
	HD74LS368	Hitachi	
	M74LS366A	Mitsubishi	
	M74LS368A	Mitsubishi	
	SN54LS366A	† Motorola	
	SN54LS368A	† Motorola	
	SN74LS366A	Motorola	
	SN74LS368A	Motorola	
	DM54LS366A	† National	
	DM54LS368A	† National	
	DM74LS366A	National	
	DM74LS368A	National	
	DN74LS366A	**Panasonic**	**(826,834)**
	DN74LS368A	**Panasonic**	**(826,834)**
	54LS366	† SGS	
	54LS368	† SGS	
	74LS366	SGS	
	74LS368	SGS	
	54LS366A	† Signetics	
	54LS368A	**† Signetics**	**(530)**
	74LS366A	Signetics	
	74LS368A	Signetics	
	SN54LS366A	**† TI**	**(1023)**
	SN54LS368A	**† TI**	**(1024)**
	SN74LS366A	**TI**	**(1023)**
	SN74LS368A	**TI**	**(1024)**
TTL-S	MC8T96	Motorola	
	MC8T98	Motorola	
	N8T96	**Signetics**	**(876)**
	N8T98	**Signetics**	**(876)**
	S8T98	**† Signetics**	**(876)**
Hex			
TTL	5404	† Fairchild	
	7404	Fairchild	
	ZN5404	† Ferranti	
	ZN7404	Ferranti	
	HD7404	Hitachi	
	MC7404	Motorola	
	DM5404	† National	
	DM7404	National	
	DM9016C	National	
	5404	**† Signetics**	**(528,860)**
	7404	**Signetics**	**(860)**
	N8890	**Signetics**	**(876)**
	N8891	**Signetics**	**(876)**
	S8891	**† Signetics**	**(876)**
	SN5404	**† TI**	**(921)**
	SN54L04	**† TI**	**(921)**
	SN7404	**TI**	**(921)**
TTL-ALS	SN54ALS04	† Motorola	
	SN74ALS04	**Motorola**	**(822)**
	DM54ALS04	† National	
	DM74ALS04	National	
	SN54ALS04	**† TI**	**(921)**
	SN54ALS1004	**† TI**	**(1115)**
	SN74ALS04	**TI**	**(921)**
	SN74ALS1004	**TI**	**(1115)**

(Continued)

Function	Device	Source	Line
Hex (Cont'd)			
TTL-AS	**SN54AS04**	**† TI**	**(921)**
	SN54AS1004	**† TI**	**(1115)**
	SN74AS04	**TI**	**(921)**
	SN74AS1004	**TI**	**(1115)**
TTL-F	54F04	Fairchild	
	74F04	Fairchild	
	MC54F04	**Motorola**	**(822)**
	MC74F04	**Motorola**	**(822)**
	54F04	Signetics	
	74F04	**Signetics**	**(879)**
TTL-H	54H04	† Fairchild	
	74H04	Fairchild	
	DM54H04	† National	
	DM74H04	National	
	SN54H04	**† TI**	**(921)**
	SN74H04	**TI**	**(921)**
TTL-LS	54LS04	† Fairchild	
	74LS04	Fairchild	
	HD74LS04	Hitachi	
	M74LS04	Mitsubishi	
	SN54LS04	**† Motorola**	**(822)**
	SN74LS04	Motorola	
	DM54LS04	† National	
	DM74LS04	National	
	DN74LS04	**Panasonic**	**(826,834)**
	54LS04	† SGS	
	74LS04	SGS	
	54LS04	**† Signetics**	**(529)**
	74LS04	Signetics	
	SN54LS04	**† TI**	**(921)**
	SN74LS04	**TI**	**(921)**
TTL-S	54S04	† Fairchild	
	74S04	Fairchild	
	HD74S04	Hitachi	
	DM54S04	† National	
	DM74S04	National	
	54S04	**† Signetics**	**(531)**
	74S04	Signetics	
	N8T93	Signetics	
	SN54S04	**† TI**	**(921)**
	SN74S04	**TI**	**(921)**
Octal, with Parity Generator-Checker			
TTL-F	**54F655**	**† Signetics**	**(890)**
	74F655	**Signetics**	**(880,890)**
Octal, Three-State			
TTL-ALS	**SN54ALS466**	**† TI**	**(1040)**
	SN54ALS468	**† TI**	**(1040)**
	SN74ALS466	**TI**	**(1040)**
	SN74ALS468	**† TI**	**(1040)**
TTL-LS	DM81LS96	National	
	DM81LS98	National	
	SN54LS466	**† TI**	**(1040)**
	SN54LS468	**† TI**	**(1040)**
	SN74LS466	**TI**	**(1040)**
	SN74LS468	**TI**	**(1040)**
TTL-S	**SN54S210**	**† MMI**	**(804)**
	SN74S210	**MMI**	**(804)**
	DM71S96	† National	
	DM71S98	† National	

Counters, Binary Count Up

Function	Device	Source	Line
Counter/Latch (divide-by-2, 4, 8, 16), Preset Input			
TTL	54177	† Fairchild	
	54197	Fairchild	
	74177	Fairchild	
	74197	Fairchild	
	HD74177	Hitachi	
	MC7281	Motorola	

(Continued)

Function	Device	Source	Line
Counter/Latch (divide-by-2, 4, 8, 16), Preset Input (Cont'd)			
TTL	MC74177	Motorola	
	MC74197	Motorola	
	MC8281	Motorola	
	DM54177	† National	
	DM54197	† National	
	DM7281	† National	
	DM7291	† National	
	DM74177	National	
	DM74197	National	
	DM8281	National	
	DM8291	National	
	RC8281	Raytheon	
	RC8291	Raytheon	
	RM8281	† Raytheon	
	RM8291	† Raytheon	
	S8281	† Signetics	
	SN54177	**† TI**	**(984)**
	SN54197	**† TI**	**(992)**
	SN74177	**TI**	**(984)**
	SN74197	**TI**	**(992)**
TTL-LS	54LS197	† Fairchild	
	74LS197	Fairchild	
	HD74LS197	Hitachi	
	SN54LS197	† Motorola	
	SN74LS197	Motorola	
	DM54LS197	† National	
	DM74LS197	National	
	DN74LS197	**Panasonic**	**(827)**
	54LS197	† SGS	
	74LS197	SGS	
	54LS197	**† Signetics**	**(530)**
	74LS197	Signetics	
	SN54LS197	**† TI**	**(992)**
	SN74LS197	**TI**	**(992)**
TTL-S	**SN54S197**	**† TI**	**(992)**
	SN74S197	**TI**	**(992)**
Counter/Register with Multiplexed Output, Three-State			
TTL-ALS	**SN54ALS691**	**† Motorola**	**(823)**
	SN54ALS693	**† Motorola**	**(823)**
	SN74ALS691	**Motorola**	**(823)**
	SN74ALS693	**Motorola**	**(823)**
	DM54ALS691	† National	
	DM54ALS693	† National	
	DM74ALS691	National	
	DM74ALS693	National	
TTL-LS	**SN54LS691**	**TI**	**(1089)**
	SN54LS693	**TI**	**(1089)**
	SN74LS691	**TI**	**(1089)**
	SN74LS693	**TI**	**(1089)**
Synchronous (both conventional and three-state outputs) Preset Input			
TTL	DM7556	National	
	DM8556	National	
Synchronous, Preset Input (asynchronous clear)			
TTL	54161	† Fairchild	
	74161	Fairchild	
	9316C	Fairchild	
	9316M	† Fairchild	
	ZN54161	† Ferranti	
	ZN74161	Ferranti	
	HD74161	Hitachi	
	M74LS161	Mitsubishi	
	MC74161	Motorola	
	MC8316	Motorola	
	MC9316	† Motorola	
	DM54161A	† National	
	DM74161A	National	
	DM8316	† National	
	DM9316	National	

(Continued)

† Military Temperature Range (−55° to 125°C)

* Typical Value

Bold face indicates additional data is provided on the page noted.

DIGITAL-TTL (Cont'd)

Counters, Binary Count Up (Cont'd)

Function	Device	Source	Line
Synchronous, Preset Input (asynchronous clear)			
TTL		(Cont'd)	
	54161	**† Signetics (528,861)**	
	74161	**Signetics (861)**	
	N9316	**Signetics (876)**	
	SN29316	TI	
	SN39316	† TI	5
	SN54161	**† TI (977)**	
	SN74161	**TI (977)**	
TTL-ALS	**SN54ALS161**	**† Motorola (823)**	
	SN74ALS161	**Motorola (823)**	
	DM54ALS161	† National	10
	DM74ALS161	National	
	SN54ALS161	**† TI (977)**	
	SN74ALS161	**TI (977)**	
TTL-AS	**SN54AS161**	**† TI (977)**	
	SN74AS161	**TI (977)**	15
TTL-F	**54F161A**	**† Fairchild (714)**	
	74F161A	**Fairchild (714)**	
	MC54F161	**† Motorola (822)**	
	MC74F161	**Motorola (822)**	
	74F161	**Signetics (879)**	20
TTL-LS	54LS161	† Fairchild	
	74LS161	Fairchild	
	HD74LS161A	Hitachi	
	SN54LS161A	† Motorola	
	SN74LS161A	Motorola	25
	DM54LS161A	† National	
	DM74LS161A	National	
	DN74LS161A	**Panasonic (827)**	
	54LS161	† SGS	
	74LS161	SGS	30
	54LS161A	**† Signetics (529)**	
	74LS161A	Signetics	
	SN54LS161A	**† TI (977)**	
	SN74LS161A	**TI (977)**	
TTL-S	**AM93S16C**	**AMD (1427)**	35
	AM93S16M	**† AMD (1427)**	
	SN54S161	**† AMD (1427)**	
	SN74S161	**AMD (1427)**	
	93S16C	Fairchild	
	93S16M	† Fairchild	40
Synchronous, Preset Input (synchronous clear)			
TTL	54163	† Fairchild	
	74163	Fairchild	
	ZN54163	† Ferranti	
	ZN74163	Ferranti	
	HD74163	Hitachi	45
	MC74163A	Motorola	
	DM54163	† National	
	DM74163	National	
	54163	**Signetics (528,861)**	
	74163	**Signetics (861)**	50
	SN54163	**† TI (978)**	
	SN74163	**TI (978)**	
TTL-ALS	**SN54ALS163**	**† Motorola (823)**	
	SN74ALS163	**Motorola (823)**	
	DM54ALS163	† National	55
	DM74ALS163	National	
	SN54ALS163	**† TI (978)**	
	SN74ALS163	**TI (978)**	
TTL-AS	**SN54AS163**	**† TI (978)**	
	SN74AS163	**TI (978)**	60
TTL-F	**54F163A**	**† Fairchild (714)**	
	74F163A	**Fairchild (714)**	
	MC54F163	**† Motorola (822)**	
		(Continued)	

Function	Device	Source	Line
Synchronous, Preset Input (synchronous clear)			
TTL-F		(Cont'd)	
	MC74F163	**Motorola (822)**	
	74F163	**Signetics (879)**	65
TTL-LS	54LS163A	† Fairchild	
	74LS163	Fairchild	
	HD74LS163A	Hitachi	
	M74LS163	Mitsubishi	
	SN54LS163A	† Motorola	70
	SN74LS163A	Motorola	
	DM54LS163A	† National	
	DM74LS163A	National	
	DN74LS163A	**Panasonic (827)**	
	74LS163	SGS	75
	54LS163A	**† Signetics (529)**	
	74LS163A	Signetics	
	SN74LS163A	**TI (978)**	
TTL-S	**SN54S163**	**† TI (978)**	
	SN74S163	**TI (978)**	80
Dual Synchronous			
TTL	MC74453	Motorola	
Dual 4-Bit, Ripple (dual 54/7493A)			
TTL	**SN54393**	**† TI (1031)**	
	SN74393	**TI (1031)**	
TTL-LS	54LS393	† Fairchild	
	74LS393	Fairchild	85
	HD74LS393	Hitachi	
	M74LS393	Mitsubishi	
	SN54LS393	† Motorola	
	SN74LS393	Motorola	
	DM54LS393	† National	90
	DM74LS393	National	
	DN74LS393	**Panasonic (827)**	
	T54LS393	† SGS	
	T74LS393	SGS	
	54LS393	**† Signetics (530)**	95
	74LS393	Signetics	
	SN54LS393	**† TI (1031)**	
	SN74LS393	**TI (1031)**	
4-Bit, Ripple			
TTL	54293	† Fairchild	
	5493	† Fairchild	100
	74293	Fairchild	
	7493	Fairchild	
	9305C	Fairchild	
	9305M	† Fairchild	
	ZN5493A	† Ferranti	105
	ZN7493A	Ferranti	
	HD74293	Hitachi	
	HD7493A	Hitachi	
	MC74293	Motorola	
	MC7493	Motorola	110
	DM5493A	† National	
	DM7493A	National	
	5493	**† Signetics (528,860)**	
	7493	**Signetics (860)**	
	SN54293	**† TI (1014)**	115
	SN5493A	**† TI (953)**	
	SN74293	**TI (1014)**	
	SN7493A	**TI (953)**	
	TD3505A	Toshiba	
TTL-L	**SN54L93**	**† TI (953)**	120
TTL-LS	54LS293	† Fairchild	
	54LS93	† Fairchild	
	74LS293	Fairchild	
	74LS93	Fairchild	
	HD74LS293	Hitachi	125
	HD74LS93	Hitachi	
	SN54LS293	† Motorola	
	SN54LS93	† Motorola	
	SN74LS293	Motorola	
		(Continued)	

Function	Device	Source	Line
4-Bit, Ripple			
TTL-LS		(Cont'd)	
	SN74LS93	Motorola	130
	DM54LS293	† National	
	DM54LS93	† National	
	DM74LS293	National	
	DM74LS93	National	
	DN74LS293	**Panasonic (827)**	135
	DN74LS93	**Panasonic (827)**	
	54LS293	† SGS	
	54LS93	† SGS	
	74LS293	SGS	
	74LS93	SGS	140
	54LS293	**† Signetics (530)**	
	54LS93	**† Signetics (529)**	
	74LS293	Signetics	
	74LS93	Signetics	
	SN54LS293	**† TI (1014)**	145
	SN54LS93	**† TI (953)**	
	SN74LS293	**TI (1014)**	
	SN74LS93	**TI (953)**	
4-Bit Binary			
TTL-ALS	**SN54ALS561**	**† Motorola (823)**	
	SN74ALS561	**Motorola (823)**	150
	SN54ALS561	**† TI (1051)**	
	SN74ALS561	**TI (1051)**	
8-Bit Synchronous			
TTL-LS	SN54LS461	† MMI	
	SN74LS461	MMI	
8-Bit with Input Registers			
TTL-LS	**SN54LS592**	**† TI (1057)**	155
	SN54LS593	**† TI (1057)**	
	SN74LS592	**TI (1057)**	
	SN74S593	TI	
8-Bit with Output Registers			
TTL-LS	**SN54LS590**	**† TI (1056)**	
	SN54LS591	**† TI (1056)**	160
	SN74LS590	**TI (1056)**	
	SN74LS591	**TI (1056)**	

Counters, Binary Count Up/Down

Function	Device	Source	Line
Counter/Register with Multiplexed Three-State Output			
TTL-ALS	**SN54ALS699**	**† Motorola (823)**	
TTL-LS	**SN54LS697**	**† TI (1090)**	
	SN54LS699	**† TI (1090)**	165
	SN74LS697	**TI (1090)**	
	SN74LS699	**TI (1090)**	
Internal Clock Generator			
TTL-LS	DN851	Panasonic	
Synchronous			
TTL-ALS	**SN54ALS569**	**† Motorola (823)**	
	SN54AS867	**† TI (1103)**	170
	SN54AS869	**† TI (1103)**	
	SN74AS867	**TI (1103)**	
	SN74AS869	**TI (1103)**	
TTL-F	54F569	† Fairchild	
	54F579	† Fairchild	175
	54F779	† Fairchild	
	74F569	Fairchild	
	74F579	Fairchild	
	74F779	Fairchild	
	74F779	**Signetics (880)**	180
Synchronous, Preset Input, Mode Control, Look-Ahead Carry			
TTL-ALS	**SN54ALS169**	**Motorola (823)**	
	SN74ALS169	**Motorola (823)**	
	SN54ALS169	**TI (980)**	
	SN74ALS169	**TI (980)**	
TTL-AS	**SN54AS169**	**† TI (980)**	185
	SN74AS169	**TI (980)**	
TTL-F	54F169	† Fairchild	
		(Continued)	

† Military Temperature Range (−55° to 125°C)

* Typical Value

Bold face indicates additional data is provided on the page noted.

© IC MASTER 1984

DIGITAL-TTL (Cont'd)

Counters, Binary Count Up/Down (Cont'd)

Function	Device	Source	Line
Synchronous, Preset Input, Mode Control, Look-Ahead Carry			
TTL-F			(Cont'd)
	54F269	† Fairchild	
	74F169	Fairchild	
	74F269	Fairchild	
	MC54F169	**† Motorola**	**(822)**
	MC74F169	**Motorola**	**(822)**
	74F169	**Signetics**	**(879)**
	74F269	**Signetics**	**(879)**
TTL-LS	54LS169	† Fairchild	
	74LS169	Fairchild	
	HD74LS669	Hitachi	
	SN54LS169	† Motorola	
	SN74LS169	Motorola	
	DM54LS169A	† National	
	DM74LS169A	National	
	T54LS169	† SGS	
	T74LS169	SGS	
	54LS169A	† Signetics	
	74LS169A	Signetics	
	SN54LS169	† TI	
	SN54LS169A	† TI	
	SN54LS669	**† TI**	**(1080)**
	SN74LS169A	TI	
	SN74LS169B	TI	
	SN74LS669	**TI**	**(1080)**
TTL-S	74S169A	Signetics	
	SN54S169	**† TI**	**(980)**
	SN74S169	**TI**	**(980)**
Synchronous, Preset Input with Mode Control			
TTL	54191	† Fairchild	
	74191	Fairchild	
	ZN54191	† Ferranti	
	ZN74191	Ferranti	
	HD74191	Hitachi	
	MC74191	Motorola	
	DM54191	† National	
	DM74191	National	
	54191	**† Signetics**	**(861)**
	74191	**Signetics**	**(861)**
	SN54191	**† TI**	**(989)**
	SN74191	**TI**	**(989)**
TTL-ALS	**SN54ALS191**	**† Motorola**	**(823)**
	SN54ALS697	**† Motorola**	**(823)**
	SN74ALS191	**Motorola**	**(823)**
	SN74ALS697	**Motorola**	**(823)**
	SN74ALS699	**Motorola**	**(823)**
	DM54ALS697	† National	
	DM54ALS699	† National	
	DM74ALS697	National	
	DM74ALS699	National	
	SN54ALS191	**† TI**	**(989)**
	SN74ALS191	**TI**	**(989)**
TTL-F	**54F191**	**† Fairchild**	**(722)**
	74F191	**Fairchild**	**(722)**
	MC54F191	**† Motorola**	**(822)**
	MC74F191	**Motorola**	**(822)**
	74F191	**Signetics**	**(879)**
TTL-LS	54LS191	† Fairchild	
	74LS191	Fairchild	
	HD74LS191	Hitachi	
	SN54LS191	† Motorola	
	SN74LS191	Motorola	
	DM54LS191	† National	
	DM74LS191	National	
	DN74LS191	**Panasonic**	**(827)**
	54LS191	† SGS	
	74LS191	SGS	
			(Continued)

Function	Device	Source	Line
Synchronous, Preset Input with Mode Control			
TTL-LS			(Cont'd)
	54LS191	**† Signetics**	**(529)**
	74LS191	Signetics	
	SN54LS191	**† TI**	**(989)**
	SN74LS191	**TI**	**(989)**
Synchronous, Preset Input, Three-State			
TTL-ALS	MC54ALS569	† Motorola	
	MC74ALS569	Motorola	
	SN54ALS569	**† TI**	**(1053)**
	SN74ALS569	**TI**	**(1053)**
TTL-LS	**AM25LS2569C**	**AMD**	**(1427)**
	AM25LS2569M	**† AMD**	**(1427)**
	SN54LS569	† Motorola	
	SN74LS569	Motorola	
	74LS569	Signetics	
Synchronous, Preset Input (2 clocks)			
TTL	54193	† Fairchild	
	74193	Fairchild	
	ZN54193	† Ferranti	
	ZN74193	Ferranti	
	HD74193	Hitachi	
	MC74193	Motorola	
	DM54193	† National	
	DM74193	National	
	DM7563	† National	
	DM8563	National	
	54193	**† Signetics**	**(528,861)**
	74193	**Signetics**	**(861)**
	SN54193	**† TI**	**(990)**
	SN74193	**TI**	**(990)**
TTL-ALS	**SN54ALS193**	**† Motorola**	**(823)**
	SN74ALS193	**Motorola**	**(823)**
	SN54ALS193	**† TI**	**(990)**
	SN74ALS193	**TI**	**(990)**
TTL-F	**54F193**	**† Fairchild**	**(726)**
	74F193	**Fairchild**	**(726)**
	MC54F193	**† Motorola**	**(822)**
	MC74F193	**Motorola**	**(822)**
	74F193	**Signetics**	**(879)**
TTL-L	**SN54L193**	**† TI**	**(990)**
TTL-LS	54LS193	† Fairchild	
	74LS193	Fairchild	
	HD74LS193	Hitachi	
	SN54LS193	† Motorola	
	SN74LS193	Motorola	
	DM54LS193	† National	
	DM74LS193	National	
	DN74LS193	**Panasonic**	**(827)**
	54LS193	† SGS	
	74LS193	SGS	
	54LS193	**Signetics**	**(530)**
	74LS193	Signetics	
	SN54LS193	**† TI**	**(990)**
	SN74LS193	**TI**	**(990)**
Synchronous with Mode Control			
TTL	RC8284	Raytheon	
	RM8284	† Raytheon	
	S8284	† Signetics	
Synchronous 4-Bit, Look-Ahead Carry			
TTL-LS	SN54LS669	† Motorola	
	SN74LS669	Motorola	
Dual, Synchronous, Preset Input			
TTL	MC4355	† Motorola	
	MC74455	Motorola	

Counters, Decade Count Up

Function	Device	Source	Line
Divide-by-2 and by-5			
TTL	5490	† Fairchild	
	74290	Fairchild	
	7490	Fairchild	
	ZN5490A	† Ferranti	
	ZN7490A	Ferranti	
	HD74290	Hitachi	
	HD7490A	Hitachi	
	MC74290	Motorola	
	MC7490	Motorola	
	DM5490	† National	
	DM7490	National	
	5490	**† Signetics**	**(860)**
	7490	**Signetics**	**(860)**
	SN54290	**† TI**	**(1012)**
	SN5490A	**† TI**	**(952)**
	SN74290	**TI**	**(1012)**
	SN7490A	**TI**	**(952)**
	TD3501A	Toshiba	
TTL-L	**SN54L90**	**† TI**	**(952)**
TTL-LS	54LS290	† Fairchild	
	54LS90	† Fairchild	
	74LS290	Fairchild	
	HD74LS290	Hitachi	
	SN54LS290	† Motorola	
	SN54LS90	† Motorola	
	SN74LS290	Motorola	
	SN74LS90	Motorola	
	DM54LS290	† National	
	DM54LS90	† National	
	DM74LS290	National	
	DM74LS90	National	
	DN74LS290	**Panasonic**	**(827)**
	DN74LS90	**Panasonic**	**(827)**
	54LS290	† SGS	
	54LS90	† SGS	
	74LS290	SGS	
	74LS90	SGS	
	54LS290	**† Signetics**	**(530)**
	54LS90	**† Signetics**	**(529)**
	74LS290	Signetics	
	74LS90	Signetics	
	SN54LS290	**† TI**	**(1012)**
	SN54LS90	**† TI**	**(952)**
	SN74LS290	**TI**	**(1012)**
	SN74LS90	**TI**	**(952)**
(Divide-by-2 and divide-by-5) Counter/Latch, Ripple, Preset Input			
TTL	54176	† Fairchild	
	54196	† Fairchild	
	74176	Fairchild	
	74196	Fairchild	
	HD74176	Hitachi	
	HD74196	Hitachi	
	MC7280	† Motorola	
	MC74176	Motorola	
	MC74196	Motorola	
	DM54176	† National	
	DM54196	† National	
	DM7280	† National	
	DM7290	† National	
	DM74176	National	
	DM74196	National	
	DM8280	National	
	DM8290	National	
	RC8280	Raytheon	
	RC8290	Raytheon	
	RM8280	† Raytheon	
	RM8290	† Raytheon	
	S8280	† Signetics	
	SN54176	**† TI**	**(984)**
			(Continued)

† Military Temperature Range (−55° to 125°C)

* Typical Value

Bold face indicates additional data is provided on the page noted.

DIGITAL–TTL (Cont'd)

Counters, Decade Count Up (Cont'd)

Function	Device	Source	Line
(Divide-by-2 and divide-by-5) Counter/Latch, Ripple, Preset Input			
TTL			(Cont'd)
	SN54196	**† TI**	**(991)**
	SN74176	**TI**	**(984)**
	SN74196	**TI**	**(991)**
TTL-LS	54LS196	† Fairchild	
	74LS196	Fairchild	5
	SN54LS196	† Motorola	
	SN74LS196	Motorola	
	DM54LS196	† National	
	DM74LS196	National	
	DN74LS196	**Panasonic**	**(827)** 10
	54LS196	† SGS	
	74LS196	SGS	
	SN54LS196	**† TI**	**(991)**
	SN74LS196	**TI**	**(991)**
TTL-S	DM54S196	† National	15
	DM74S196	National	
	SN54S196	**† TI**	**(991)**
	SN74S196	**TI**	**(991)**
Synchronous (both conventional and three-state outputs), Preset Inputs			
TTL	DM7555	† National	
	DM8555	National	20
Synchronous, Preset Input (asynchronous clear)			
TTL	54160	† Fairchild	
	74160	Fairchild	
	9310C	Fairchild	
	9310M	† Fairchild	
	HD74160	Hitachi	25
	MC74160	Motorola	
	MC8310	Motorola	
	MC9310	Motorola	
	DM54160A	† National	
	DM74160A	National	30
	DM8310	National	
	DM9310	† National	
	54160	**† Signetics**	**(861)**
	74160	**Signetics**	**(861)**
	N9310	**Signetics**	**(876)** 35
	SN29310	TI	
	SN39310	TI	
	SN54160	**† TI**	**(977)**
	SN74160	**TI**	**(977)**
TTL-ALS	**SN54ALS160**	**† Motorola**	**(823)** 40
	SN74ALS160	**Motorola**	**(823)**
	DM54ALS160	† National	
	DM74ALS160	National	
	SN54ALS160	**† TI**	**(977)**
	SN74ALS160	**TI**	**(977)** 45
TTL-AS	**SN54AS160**	**† TI**	**(977)**
	SN74AS160	**TI**	**(977)**
TTL-F	**54F160A**	**† Fairchild**	**(710)**
	74F160A	**Fairchild**	**(710)**
	MC54F160	**† Motorola**	**(822)** 50
	MC74F160	**Motorola**	**(822)**
	74F160	**Signetics**	**(879)**
TTL-LS	54LS160A	† Fairchild	
	74LS160	Fairchild	
	HD74LS160A	Hitachi	55
	SN54LS160A	† Motorola	
	SN74LS160A	Motorola	
	DM54LS160A	† National	
	DM74LS160A	National	
	DN74LS160A	**Panasonic**	**(827)** 60
	54LS160	† SGS	
	74LS160	SGS	
	54LS160A	† Signetics	
			(Continued)

Function	Device	Source	Line
Synchronous, Preset Input (asynchronous clear)			
TTL-LS			(Cont'd)
	74LS160A	Signetics	
	SN54LS160A	**† TI**	**(977)** 65
	SN74LS160A	**TI**	**(977)**
TTL-S	**AM93S10**	**AMD**	**(1427)**
	SN54S160	**† AMD**	**(1427)**
	SN74S160	**AMD**	**(1427)**
	93S10C	Fairchild	70
	93S10M	† Fairchild	
Synchronous, Preset Input (synchronous clear)			
TTL	54162	† Fairchild	
	74162	Fairchild	
	HD74162	Hitachi	
	MC74162	Motorola	75
	DM54162A	† National	
	DM74162A	National	
	SN54162	**† TI**	**(978)**
	SN74162	**TI**	**(978)**
TTL-ALS	**SN54ALS162**	**† Motorola**	**(823)** 80
	SN54ALS690	**† Motorola**	**(823)**
	~~**SN54ALS692**~~	~~**† Motorola**~~	~~**(823)**~~
	SN74ALS162	**Motorola**	**(823)**
	SN74ALS690	**Motorola**	**(823)**
	SN74ALS692	**Motorola**	**(823)** 85
	DM54ALS162	† National	
	DM54ALS690	† National	
	DM54ALS692	† National	
	DM74ALS162	National	
	DM74ALS690	National	90
	DM74ALS692	National	
	SN54ALS162	**† TI**	**(978)**
	SN74ALS162	**TI**	**(978)**
TTL-AS	**SN54AS162**	**† TI**	**(978)**
	SN74AS162	**TI**	**(978)** 95
TTL-F	**54F162A**	**† Fairchild**	**(710)**
	74F162A	**Fairchild**	**(710)**
	MC54F162	**† Motorola**	**(822)**
	MC74F162	**Motorola**	**(822)**
	74F162	**Signetics**	**(879)** 100
TTL-LS	54LS162A	† Fairchild	
	74LS162	Fairchild	
	HD74LS162A	Hitachi	
	SN54LS162A	† Motorola	
	SN74LS162A	Motorola	105
	DM54LS162	† National	
	DM74LS162	National	
	DN74LS162	**Panasonic**	**(827)**
	54LS162	† SGS	
	74LS162	SGS	110
	54LS162A	† Signetics	
	74LS162A	Signetics	
	SN54LS162A	**† TI**	**(978)**
	SN54LS690	**† TI**	**(1089)**
	SN54LS692	**† TI**	**(1089)** 115
	SN74LS162A	**TI**	**(978)**
	SN74LS690	**TI**	**(1089)**
	SN74LS692	**TI**	**(1089)**
TTL-S	DM54S162	† National	
	DM74S162	National	120
	SN54S162	**† TI**	**(978)**
	SN74S162	**TI**	**(978)**
Dual, Ripple (dual 54/7490A)			
TTL	**SN54390**	**† TI**	**(1031)**
	SN54490	**† TI**	**(1043)**
	SN74390	**TI**	**(1031)** 125
	SN74490	**TI**	**(1043)**
TTL-LS	54LS390	† Fairchild	
	54LS490	† Fairchild	
	74LS390	Fairchild	
	74LS490	Fairchild	130
			(Continued)

Function	Device	Source	Line
Dual, Ripple (dual 54/7490A)			
TTL-LS			(Cont'd)
	HD74LS490	Hitachi	
	HD74S390	Hitachi	
	SN54LS390	† Motorola	
	SN54LS490	† Motorola	
	SN74LS390	Motorola	135
	SN74LS490	Motorola	
	DM54LS390	† National	
	DM74LS390	National	
	DN74LS390	**Panasonic**	**(827)**
	DN74LS490	**Panasonic**	**(827)** 140
	T54LS390	† SGS	
	T54LS490	† SGS	
	T74LS390	SGS	
	T74LS490	SGS	
	54LS390	† Signetics	145
	54LS490	**† Signetics**	**(530)**
	74LS390	Signetics	
	74LS490	Signetics	
	SN54LS390	**† TI**	**(1031)**
	SN54LS490	**† TI**	**(1043)** 150
	SN74LS390	**TI**	**(1031)**
	SN74LS490	**TI**	**(1043)**
Dual, Synchronous			
TTL	MC74452	Motorola	
4-Bit, Three-State			
TTL-ALS	**SN54ALS560**	**† Motorola**	**(823)**
	SN74ALS560	**Motorola**	**(823)** 155
	SN54ALS560	**† TI**	**(1051)**
	SN74ALS560	**TI**	**(1051)**
10-Line Output (resettable 2-10)			
TTL	9319C	Fairchild	
	9319M	† Fairchild	
	9320M	† Fairchild	160

Counters, Decade Count Up/Down

Function	Device	Source	Line
Counter/Register with Multiplexed Three-State Output			
TTL-ALS	**SN54ALS696**	**† Motorola**	**(823)**
	SN54ALS698	**† Motorola**	**(823)**
	SN74ALS696	**Motorola**	**(823)**
	SN74ALS698	**Motorola**	**(823)**
	DM54ALS696	† National	165
	DM54ALS698	† National	
	DM74ALS696	National	
	DM74ALS698	National	
TTL-LS	**SN54LS696**	**† TI**	**(1090)**
	SN54LS698	**† TI**	**(1090)** 170
	SN74LS696	**TI**	**(1090)**
	SN74LS698	**TI**	**(1090)**
Synchronous			
TTL	RC8285	Raytheon	
	RM8285	† Raytheon	
TTL-ALS	**SN54ALS568**	**† Motorola**	**(823)** 175
	SN74ALS568	**Motorola**	**(823)**
	SN54ALS568	**† TI**	**(1053)**
	SN74ALS568	**TI**	**(1053)**
TTL-F	54F568	† Fairchild	
	74F568	Fairchild	180
	74F568	**Signetics**	**(879)**
	74F569	**Signetics**	**(879)**
	74F579	**Signetics**	**(879)**
TTL-LS	74LS568	Signetics	
Synchronous, Preset Input, Mode Control, Look-Ahead Carry			
TTL-ALS	**SN54ALS168**	**† Motorola**	**(823)** 185
	SN74ALS168	**Motorola**	**(823)**
	~~**SN54ALS168**~~	~~**† TI**~~	~~**(980)**~~
	SN74ALS168	**TI**	**(980)**
			(Continued)

† Military Temperature Range (−55° to 125°C)

* Typical Value

Bold face indicates additional data is provided on the page noted.

© IC MASTER 1984

DIGITAL–TTL (Cont'd)

Counters, Decade Count Up/Down (Cont'd)

Function	Device	Source	Line
Synchronous, Preset Input, Mode Control, Look-Ahead Carry (Cont'd)			
TTL-AS	**SN54AS168**	**† TI**	**(980)**
	SN74AS168	**TI**	**(980)**
TTL-F	**MC54F168**	**† Motorola**	**(822)**
	MC74F168	**Motorola**	**(822)**
	74F168	**Signetics**	**(879)**
TTL-LS	AM25LS168AC	AMD	
	AM25LS168AM	† AMD	
	54LS168	† Fairchild	
	74LS168	Fairchild	
	HD74LS668	Hitachi	
	SN54LS168	† Motorola	
	SN54LS668	† Motorola	
	SN74LS168	Motorola	
	SN74LS668	Motorola	
	DM54LS168A	National	
	DM74LS168A	National	
	T54LS168	† SGS	
	T74LS168	SGS	
	54LS168A	† Signetics	
	74LS168A	Signetics	
	74S168A	Signetics	
	SN54LS168	† TI	
	SN54LS668	**† TI**	**(1080)**
	SN74LS668	**TI**	**(1080)**
TTL-S	**SN54S168**	**† TI**	**(980)**
	SN74S168	**TI**	**(980)**
Synchronous, Preset Input, Three-State			
TTL-LS	**AM25LS2568C**	**AMD**	**(1427)**
	AM25LS2568M	**† AMD**	**(1427)**
	SN54LS568	† Motorola	
	SN74LS568	Motorola	
Synchronous, Preset Input (2 clocks)			
TTL	54192	† Fairchild	
	74192	Fairchild	
	ZN54192	† Ferranti	
	ZN74192	Ferranti	
	HD74192	Hitachi	
	MC74192	Motorola	
	DM54192	† National	
	DM74192	National	
	DM7560	† National	
	DM8560	National	
	54192	**† Signetics**	**(861)**
	74192	**Signetics**	**(861)**
	SN54192	**† TI**	**(990)**
	SN74192	**TI**	**(990)**
TTL-ALS	**SN54ALS192**	**† Motorola**	**(823)**
	SN74ALS192	**Motorola**	**(823)**
	SN54ALS192	**† TI**	**(990)**
	SN74ALS192	**TI**	**(990)**
TTL-F	**54F192**	**† Fairchild**	**(726)**
	74F192	**Fairchild**	**(726)**
	MC54F192	**† Motorola**	**(822)**
	MC74F192	**Motorola**	**(822)**
	74F192	**Signetics**	**(879)**
TTL-L	**SN54L192**	**† TI**	**(990)**
TTL-LS	AM25LS192C	AMD	
	AM25LS192M	† AMD	
	54LS192	† Fairchild	
	74LS192	Fairchild	
	HD74LS192	Hitachi	
	SN54LS192	† Motorola	
	SN74LS192	Motorola	
	DM54LS192	† National	
	DM74LS192	National	
	DM74LS192	**Panasonic**	**(827)**
	54LS192	† SGS	
		(Continued)	

Function	Device	Source	Line
Synchronous, Preset Input (2 clocks) TTL-LS (Cont'd)			
	74LS192	SGS	
	54LS192	**† Signetics**	**(530)**
	74LS192	Signetics	
	SN54LS192	**† TI**	**(990)**
	SN74LS192	**TI**	**(990)**
Synchronous, Preset, with Mode Control			
TTL	54190	† Fairchild	
	74190	Fairchild	
	HD74190	Hitachi	
	MC74190	Motorola	
	DM54190	† National	
	DM74190	National	
	54190	**† Signetics**	**(861)**
	74190	**Signetics**	**(861)**
	SN54190	**† TI**	**(989)**
	SN74190	**TI**	**(989)**
TTL-ALS	**SN54ALS190**	**† Motorola**	**(823)**
	SN74ALS190	**Motorola**	**(823)**
	SN54ALS190	**† TI**	**(989)**
	SN74ALS190	**TI**	**(989)**
TTL-F	**54F190**	**† Fairchild**	**(722)**
	74F190	**Fairchild**	**(722)**
	MC54F190	**† Motorola**	**(822)**
	MC74F190	**Motorola**	**(822)**
	74F190	**Signetics**	**(879)**
TTL-LS	AM25LS190C	AMD	
	AM35LS190M	† AMD	
	54LS190	† Fairchild	
	74LS190	Fairchild	
	HD74LS190	Hitachi	
	SN54LS190	† Motorola	
	SN74LS190	Motorola	
	DM54LS190	† National	
	DM74LS190	National	
	DM74LS190	**Panasonic**	**(827)**
	54LS190	† SGS	
	74LS190	SGS	
	54LS190	**† Signetics**	**(529)**
	SN54LS190	**† TI**	**(989)**
	SN74LS190	**TI**	**(989)**
Dual, Synchronous, Preset Input			
TTL	MC74454	Motorola	
Four Counter/Latch/Display Driver (synchronous, BCD and segment drives)			
TTL	ZN1040AE	Ferranti	

Counters, Miscellaneous

Function	Device	Source	Line
Divide-by-4			
TTL	TD6100	Toshiba	
Divide-by-12 (divide by 2 and 6), Preset Input			
TTL	DM7288	† National	
	DM8288	National	
Divide-by-12 (divide by 2 and 6), Ripple			
TTL	5492	† Fairchild	
	7492	Fairchild	
	ZN5492A	† Ferranti	
	ZN7492A	Ferranti	
	HD7492A	Hitachi	
	MC7492	Motorola	
	DM5492A	† National	
	DM7492A	National	
	SN5492A	† RIFA	
	5492	**† Signetics**	**(860)**
	7492	**Signetics**	**(860)**
	SN5492A	**† TI**	**(952)**
	SN7492A	**TI**	**(952)**
TTL-LS	54LS92	† Fairchild	
	74LS92	Fairchild	
	HD74LS92	Hitachi	
		(Continued)	

Function	Device	Source	Line
Divide-by-12 (divide by 2 and 6), Ripple TTL-LS (Cont'd)			
	SN54LS92	† Motorola	
	SN74LS92	Motorola	
	DM54LS92	† National	
	DM74LS92	National	
	DM74LS92	**Panasonic**	**(827)**
	54LS92	† SGS	
	74LS92	SGS	
	54LS92	† Signetics	
	74LS92	Signetics	
	SN54LS92	**† TI**	**(952)**
	SN74LS92	**TI**	**(952)**
Programmable Modulo-N Binary			
TTL	MC4018	Motorola	
	MC4019	Motorola	
	MC4318	† Motorola	
	MC4319	† Motorola	
TTL-LS	SN54LS718	† Motorola	
	SN74LS718	Motorola	
Programmable Modulo-N Decade			
TTL	MC4016	Motorola	
	MC4017	Motorola	
	MC4316	† Motorola	
	MC4317	† Motorola	
TTL-LS	SN54LS716	† Motorola	
	SN74LS716	Motorola	
Binary Counter/Latch, Three-State			
TTL	DM7554	† National	
	DM8554	National	
Dual 4-Bit Binary Counter			
TTL-LS	**SN54LS69**	**† TI**	**(942)**
	SN74LS69	**TI**	**(942)**
Dual 4-Bit Decade Counter			
TTL-LS	**SN54LS68**	**† TI**	**(942)**
	SN74LS68	**TI**	**(942)**
Decade Counter/Latch/Decoder (nixie driver)			
TTL	SN74142	TI	
Decade Counter/Latch, LED/Lamp Driver (constant current output)			
TTL	**SN54143**	**† TI**	**(970)**
	SN74143	**TI**	**(970)**
Decade Counter/Latch LED/Lamp Driver (high current output)			
TTL	**SN54144**	**† TI**	**(970)**
	SN74144	**TI**	**(970)**
Decade Counter/Latch/Multiplexer/Synchronous/Asynchronous Reset/Three-State			
TTL-ALS	**SN54ALS694**	**† Motorola**	**(823)**
	SN54ALS695	**† Motorola**	**(823)**
	SN74ALS694	**Motorola**	**(823)**
	SN74ALS695	**Motorola**	**(823)**
Decade Counter/Latch, Three-State			
TTL	DM7552	† National	
	DM8552	National	
Decade Counter/Latch/7 Segment Decoder			
TTL	MC4050	Motorola	
	MC4350	† Motorola	
TTL-LS	SN54LS294	† TI	
4-Bit Universal			
TTL	MC4023	Motorola	
6-Bit Universal			
TTL	DM75S50	National	
8-Bit Binary Counter/Latch			
TTL-LS	**SN74LS593**	**TI**	**(1057)**
10-Bit Up/Down (provides CRT vertical and horizontal timing generation)			
TTL-LS	SN54LS491	† MMI	
	SN74LS491	MMI	

† Military Temperature Range (−55° to 125°C)

* Typical Value

Bold face indicates additional data is provided on the page noted.

DIGITAL–TTL (Cont'd)

Function	Device	Source	Line
Counters, Miscellaneous (Cont'd)			
16-Bit Programmable Modulo			
TTL-LS	**SN74LS294**	**TI**	**(1014)**
32-Bit Programmable Modulo			
TTL-LS	**SN54LS292**	**† TI**	**(1013)**
	SN74LS292	**TI**	**(1013)**
Decoders			
Demultiplexer, (2-lines in-2 of 4 out) Three-State			
TTL	DM7230	† National	
	DM8230	National	
Excess 3 Gray-to-Decimal (1 of 10)			
TTL	5444	† Fairchild	
	HD7444A	Hitachi	
	MC7444	Motorola	
	SN5444A	**† TI**	**(934)**
	SN54L44	**† TI**	**(934)**
	SN7444A	**TI**	**(934)**
Excess 3-to-Decimal (1 of 10)			
TTL	5443	† Fairchild	
	7443	Fairchild	
	HD7443A	Hitachi	
	MC7443	Motorola	
	SN5443A	**† TI**	**(934)**
	SN54L43	**† TI**	**(934)**
	SN7443A	**TI**	**(934)**
Binary to Octal, Inverting/Non-Inverting, Open Collector			
TTL	MC4038	Motorola	
Binary to Octal, Non-Inverting			
TTL	MC4048	Motorola	
Binary to Octal (1 of 8)			
TTL	MC4006	Motorola	
	MC4306	† Motorola	
	MC7250	Motorola	
	MC8250	† Motorola	
	DN852	Panasonic	
	RC8250	Raytheon	
	RM8250	† Raytheon	
	N9301	**Signetics**	**(876)**
	S8250	† Signetics	
TTL-S	**N82S50**	**Signetics**	**(876)**
Binary to Octal (1 of 8), Polarity Control, Three-State			
TTL-LS	**AM2921C**	**AMD**	**(1414)**
	AM2921M	**† AMD**	**(1414)**
Binary to 2-of-8, Open Collector			
TTL	MC4040	Motorola	
BCD-to-Binary and Binary-to-BCD Converter, Open Collector			
TTL	MC4001	Motorola	
BCD-to-Decimal Decoder/Driver, Open Collector			
TTL-LS	54LS445	† Signetics	
	74LS445	Signetics	
	SN54LS445	**† TI**	**(1037)**
	SN74LS445	**TI**	**(1037)**
BCD-to-Decimal Decoder/Driver, Open Collector to 30 V Output			
TTL	5445	† Fairchild	
	7445	Fairchild	
	HD7445	Hitachi	
	MC7445	Motorola	
	DM5445	† National	
	DM7445	National	
	5445	**† Signetics**	**(860)**
	7445	**Signetics**	**(860)**
	SN5445	**† TI**	**(934)**
	SN7445	**TI**	**(934)**
BCD-to-Decimal Decoder/Driver, Open Collector, 15 V			
TTL	54145	† Fairchild	
	74145	Fairchild	
	HD74145	† Hitachi	
			(Continued)

Function	Device	Source	Line
BCD-to-Decimal Decoder/Driver, Open Collector, 15 V (Cont'd)			
TTL	MC74145	Motorola	
	DM54145	† National	
	DM74145	National	
	54145	**† Signetics**	**(861)**
	74145	**Signetics**	**(861)**
	SN54145	**† TI**	**(970)**
	SN74145	**TI**	**(970)**
TTL-LS	74LS145	Fairchild	
	HD74LS145	Hitachi	
	SN54LS145	† Motorola	
	SN74LS145	Motorola	
	DN74LS145	**Panasonic**	**(827)**
	SN54LS145	**† TI**	**(970)**
	SN74LS145	**TI**	**(970)**
BCD-to-Decimal (1 of 10)			
TTL	5442	† Fairchild	
	7442	Fairchild	
	9301C	Fairchild	
	9301M	† Fairchild	
	93000	Fairchild	
	9302M	† Fairchild	
	ZN5442	† Ferranti	
	ZN7442	Ferranti	
	HD7442A	Hitachi	
	MC7442	Motorola	
	MC8301	Motorola	
	MC9301	† Motorola	
	DM5442	† National	
	DM7442	National	
	DM8301	National	
	DM9301	† National	
	RC8251	Raytheon	
	RC8252	Raytheon	
	RM8251	† Raytheon	
	RM8252	† Raytheon	
	5442	**† Signetics**	**(860)**
	7442	**Signetics**	**(860)**
	SN29301	TI	
	SN39301	† TI	
	SN5442A	**† TI**	**(933)**
	SN54L42	**† TI**	**(933)**
	SN7442A	**TI**	**(933)**
TTL-LS	54LS42	† Fairchild	
	74LS42	Fairchild	
	HD74LS42	Hitachi	
	SN54LS42	† Motorola	
	SN74LS42	Motorola	
	DM54LS42	† National	
	DM74LS42	National	
	DN74LS42	**Panasonic**	**(827)**
	54LS42	† SGS	
	74LS42	SGS	
	54LS42	**† Signetics**	**(529)**
	74LS42	Signetics	
	SN54LS42	**† TI**	**(933)**
	SN74LS42	**TI**	**(933)**
TTL-S	**N82S52**	**Signetics**	**(876)**
BCD-to-Decimal (1 of 10), Three-State			
TTL-ALS	**SN54ALS537**	**† Motorola**	**(823)**
	SN74ALS537	**Motorola**	**(823)**
TTL-F	54F537	† Fairchild	
	74F537	Fairchild	
	MC54F537	**† Motorola**	**(822)**
	MC74F537	**Motorola**	**(822)**
TTL-LS	**AM25LS2537C**	**AMD**	**(1427)**
	AM25LS2537M	**† AMD**	**(1427)**
Dual Binary to One-of-Four Line Gated			
TTL	MC4007	Motorola	
	MC4307	† Motorola	

Function	Device	Source	Line
Dual 1-of-4 Decoder/Demultiplexer (independent address)			
TTL	9321C	Fairchild	
	9321M	† Fairchild	
Dual 2-Line to 4-Line Decoder/Demultiplexer			
TTL-ALS	**SN54ALS539**	**† Motorola**	**(823)**
	SN74ALS539	**Motorola**	**(823)**
	SN54ALS539	**† TI**	**(1049)**
	SN74ALS539	**TI**	**(1049)**
TTL-AS	**SN54ALS139**	**† Motorola**	**(823)**
	SN74ALS139	**Motorola**	**(823)**
	SN54ALS139	**† TI**	**(968)**
	SN54AS139	**† TI**	**(968)**
	SN74ALS139	**TI**	**(968)**
	SN74AS139	**TI**	**(968)**
TTL-F	54F139	† Fairchild	
	74F139	Fairchild	
	MC54F139	**† Motorola**	**(822)**
	MC74F139	**Motorola**	**(822)**
	54F139	† Signetics	
	74F139	**Signetics**	**(879)**
TTL-LS	AM25LS139C	AMD	
	AM25LS139M	AMD	
	54LS139	† Fairchild	
	74LS139	Fairchild	
	HD74LS139	Hitachi	
	SN54LS139	† Motorola	
	SN74LS139	Motorola	
	DM54LS139	† National	
	DM74LS139	National	
	DN74LS139	**Panasonic**	**(827)**
	54LS139	† SGS	
	74LS139	SGS	
	54LS139	**† Signetics**	**(529)**
	74LS139	Signetics	
	SN54LS139	**† TI**	**(968)**
	SN74LS139	**TI**	**(968)**
TTL-S	54S139	† Fairchild	
	74S139	Fairchild	
	HD74S139	Hitachi	
	DM54S139	† National	
	DM74S139	National	
	54S139	† Signetics	
	74S139	Signetics	
	SN54S139	**† TI**	**(968)**
	SN74S139	**TI**	**(968)**
Dual 2-Line to 4-Line Decoder Demultiplexer (active high outputs)			
TTL-ALS	**SN54ALS239**	**† Motorola**	**(823)**
	SN74ALS239	**Motorola**	**(823)**
Dual 2-Line to 4-Line Decoder/Demultiplexer, Open Collector (or 3-line to 8-line decoder/demultiplexer)			
TTL	54156	† Fairchild	
	74156	Fairchild	
	HD74156	Hitachi	
	MC74156	Motorola	
	DM54156	† National	
	DM74156	National	
	54156	**† Signetics**	**(861)**
	74156	**Signetics**	**(861)**
	SN54156	**† TI**	**(974)**
	SN74156	**TI**	**(974)**
TTL-LS	54LS156	† Fairchild	
	74LS156	Fairchild	
	HD74LS156	Hitachi	
	SN54LS156	† Motorola	
	SN74LS156	Motorola	
	DM54LS156	† National	
	DM74LS156	National	
	DN74LS156	**Panasonic**	**(827)**
	54LS156	† SGS	
	74LS156	SGS	
	54LS156	† Signetics	
			(Continued)

† Military Temperature Range (−55° to 125°C)

* Typical Value

Bold face indicates additional data is provided on the page noted.

© IC MASTER 1984

DIGITAL–TTL (Cont'd)

Decoders (Cont'd)

Function	Device	Source	Line
Dual 2-Line to 4-Line Decoder/Demultiplexer, Open Collector (or 3-line to 8-line decoder/demultiplexer)			
TTL-LS		(Cont'd)	
	74LS156	Signetics	
	SN54LS156	**† TI (974)**	
	SN74LS156	**TI (974)**	
Dual 2-Line to 4-Line Decoder/Demultiplexer, Three-State			
TTL-F	54F539	† Fairchild	
	74F539	Fairchild	5
	MC54F539	**† Motorola (822)**	
	~~**MC74F539**~~	~~**Motorola (822)**~~	
TTL-LS	**AM25LS2539C**	**AMD (1427)**	
	AM25LS2539M	**† AMD (1427)**	
Dual 2-Line to 4-Line Decoder/Demultiplexer, Totem Pole Output (or 3-line to 8-line decoder/demultiplexer)			
TTL	54155	† Fairchild	10
	74155	Fairchild	
	ZN54155	† Ferranti	
	ZN74155	Ferranti	
	HD74155	Hitachi	
	MC74155	Motorola	15
	DM54155	† National	
	DM74155	National	
	74155	**Signetics (861)**	
	SN54155	**† TI (974)**	
	SN74155	**TI (974)**	20
TTL-LS	54LS155	† Fairchild	
	74LS155	Fairchild	
	HD74LS155	Hitachi	
	SN54LS155	† Motorola	
	SN74LS155	Motorola	25
	DM54LS155	† National	
	DM74LS155	National	
	DN74LS155	**Panasonic (827)**	
	54LS155	† SGS	
	74LS155	SGS	30
	54LS155	† Signetics	
	74LS155	Signetics	
	SN54LS155	**† TI (974)**	
	SN74LS155	**TI (974)**	
1-Line to 8-Line Decoder/Demultiplexer			
	54F547	† Fairchild	35
	54F548	† Fairchild	
	74F547	Fairchild	
	74F548	Fairchild	
1-Line to 8-Line Demultiplexer			
TTL	DM7223	† National	
	DM8223	National	40
3-Line to 8-Line Decoder/Demultiplexer			
TTL-ALS	**SN54ALS138**	**† Motorola (823)**	
	SN54ALS538	**† Motorola (823)**	
	SN74ALS138	**Motorola (823)**	
	SN74ALS538	**Motorola (823)**	
	SN54ALS138	**† TI (968)**	45
	SN54ALS538	**† TI (1048)**	
	SN74ALS138	**TI (968)**	
	SN74ALS538	**TI (1048)**	
TTL-AS	**SN54AS138**	**† TI (968)**	
	SN74AS138	**TI (968)**	50
TTL-F	54F138	† Fairchild	
	74F138	Fairchild	
	MC54F138	**† Motorola (822)**	
	MC74F138	**Motorola (822)**	
	74F138	**Signetics (879)**	55
TTL-LS	AM25LS2548C	AMD	
	54LS138	† Fairchild	
	74LS138	Fairchild	
	HD74LS138	Hitachi	
	M74LS138	Mitsubishi	60
	SN54LS138	† Motorola	
		(Continued)	

Function	Device	Source	Line
3-Line to 8-Line Decoder/Demultiplexer			
TTL-LS		(Cont'd)	
	SN74LS138	Motorola	
	DM54LS138	† National	
	DM74LS138	National	
	DN74LS138	**Panasonic (827)**	65
	54LS138	† SGS	
	74LS138	SGS	
	54LS138	**† Signetics (529)**	
	74LS138	Signetics	
	SN54LS138	**† TI (968)**	70
	SN74LS138	**TI (968)**	
TTL-S	54S138	† Fairchild	
	74S138	Fairchild	
	HD74S138	Hitachi	
	DM54S138	† National	75
	DM74S138	National	
	74S138	† Signetics	
	SN54S138	**† TI (968)**	
	SN74S138	**TI (968)**	
3-Line to 8-Line Decoder/Demultiplexer (active high outputs)			
TTL-ALS	**SN54ALS238**	**† Motorola (823)**	80
	SN74ALS238	**Motorola (823)**	
3-Line to 8-Line Decoder/Demultiplexer, Inverting/Non-Inverting, Input Latches			
TTL-LS	**AM25LS2536C**	**AMD (1427)**	
	AM25LS2536M	**† AMD (1427)**	
3-Line to 8-Line Decoder/Demultiplexer, Inverting/Non-Inverting, Three-State			
TTL-F	54F538	† Fairchild	
	74F538	Fairchild	85
	MC54F538	**† Motorola (822)**	
	MC74F538	**Motorola (822)**	
TTL-LS	**AM25LS2538C**	**AMD (1427)**	
	AM25LS2538M	**† AMD (1427)**	
3-Line to 8-Line Decoder/Demultiplexer with Input Latches			
TTL-ALS	**SN54ALS137**	**† TI (967)**	90
	SN74ALS137	**TI (967)**	
TTL-AS	**SN54AS137**	**† TI (967)**	
	SN74AS137	**TI (967)**	
TTL-LS	SN54LS137	† Motorola	
	SN74LS137	Motorola	95
	SN54LS137	**† TI (967)**	
	SN74LS137	**TI (967)**	
TTL-S	54S137	† Fairchild	
	93S137C	Fairchild	
	93S137M	† Fairchild	100
3-Line to 8-Line Decoders/Demultiplexer with Address Registers			
TTL-ALS	**SN54ALS131**	**† TI (964)**	
	SN74ALS131	**TI (964)**	
TTL-AS	**SN54AS131**	**† TI (964)**	
	SN74AS131	**TI (964)**	
4-Line to 16-Line Decoder/Demultiplexer			
TTL	54154	† Fairchild	105
	9311C	Fairchild	
	9311M	† Fairchild	
	ZN54154	† Ferranti	
	ZN74154	Ferranti	
	HD74154	Hitachi	110
	MC74154	Motorola	
	MC8311	Motorola	
	MC9311	† Motorola	
	DM54154	† National	
	DM74154	National	115
	DM8311	National	
	DM9311	† National	
	54154	**† Signetics (528,861)**	
	74154	**Signetics (861)**	
		(Continued)	

Function	Device	Source	Line
4-Line to 16-Line Decoder/Demultiplexer			
TTL		(Cont'd)	
	SN29311	TI	120
	SN39311	† TI	
	SN54154	**† TI (973)**	
	SN74154	**TI (973)**	
TTL-LS	HD74LS154	Hitachi	
	DM54LS154	† National	125
	DM74LS154	National	
	54LS154	**† Signetics (529)**	
	74LS154	Signetics	
4-Line to 16-Line Decoder/Demultiplexer, Open Collector Output			
TTL	HD74159	Hitachi	
	SN54159	**† TI (976)**	130
	SN74159	**TI (976)**	

Drivers

See Also Interface-Memory and Peripheral Drivers

Function	Device	Source	Line
Dual 4-Input Positive NAND 50 Ohm Line Driver			
TTL-S	54S140	† Fairchild	
	74S140	† Fairchild	
	HD74S140	Hitachi	135
	DM54S140	† National	
	DM74S140	National	
	54S140	**† Signetics (531)**	
	74S140	Signetics	
	SN54S140	**† TI (969)**	140
	SN74S140	**TI (969)**	
Triple 4-Input AND/NAND Driver			
TTL-AS	**SN54AS800**	**† TI (1093)**	
	SN74AS800	**TI (1093)**	
Triple 4-Input OR/NOR Driver			
TTL-AS	**SN54AS802**	**† TI (1094)**	
	SN74AS802	**TI (1094)**	145
Quad Bus Driver, Three-State			
TTL	RC8T09	Raytheon	
	RM8T09	† Raytheon	
	N8T09	**Signetics (876)**	
	S8T09	**† Signetics (876)**	
Quad Predriver, Open Collector			
TTL	MC4042	Motorola	150
Quad 2-Input AND Buffer, Open Collector, to 15 V Output (high voltage 54/74109)			
TTL	DS7819	† National	
	DS8819	National	
Quad 2-Input AND Power Driver, Open Collector (to 100 V, sinks 500 mA)			
TTL	UHC/D-400	† Sprague	
	UHC/D-406	† Sprague	
	UHC/D-500	† Sprague	155
	UHC/D-506	† Sprague	
	UHP-400	Sprague	
	UHP-406	Sprague	
	UHP-500	Sprague	
	UHP-506	Sprague	160
Quad 2-Input AND Power Driver (to 70 V, sinks 300ma)			
TTL	UDN-5706A	Sprague	
	UDS-5706H	† Sprague	
Quad 2-Input NAND Buffer, Open Collector, to 15 V Output			
TTL	5426	† Fairchild	
	7426	Fairchild	
	HD7426	Hitachi	165
	MC7426	Motorola	
	DM5426	† National	
	DM7426	National	
	DS7810	† National	
	DS7811	† National	170
	DS8810	National	
	DS8811	National	
		(Continued)	

† Military Temperature Range (−55° to 125°C)

* Typical Value

Bold face indicates additional data is provided on the page noted.

DIGITAL–TTL (Cont'd)

Function	Device	Source	Line
Drivers (Cont'd)			
Quad 2-Input NAND Buffer, Open Collector, to 15 V Output (Cont'd)			
TTL	**5426**	**† Signetics (528,860)**	
	7426	**Signetics (860)**	
	SN5426	**† TI (928)**	
	SN7426	**TI (928)**	
Quad 2-Input NAND Buffer, Open Collector, to 30 V Output			
TTL	N8T80	Signetics	5
	S8T80	† Signetics	
Quad 2-Input NAND Bus Driver, Open Collector, 80ma			
TTL	96101	Fairchild	
Quad 2-Input NAND Power Driver, Open Collector (to 100 V, sinks 500 mA)			
TTL	UHC/D-407	† Sprague	
	UHC/D-408	† Sprague	
	UHC/D-507	† Sprague	10
	UHC/D-508	† Sprague	
	UHP-407	Sprague	
	UHP-408	Sprague	
	UHP-507	Sprague	
	UHP-508	Sprague	15
Quad 2-Input NOR Driver			
TTL-AS	SN54AS1036	† TI	
	SN74AS1036	TI	
Quad 2-Input NOR Power Driver, Open Collector (to 100 V, sinks 500 mA)			
TTL	UHC/D-432	† Sprague	
	UHC/D-433	† Sprague	
	UHC/D-532	† Sprague	20
	UHC/D-533	† Sprague	
	UHP-432	Sprague	
	UHP-433	Sprague	
	UHP-532	Sprague	
	UHP-533	Sprague	25
Quad 2-Input NOR 74-Ohm/50-Ohm Line Driver			
TTL	**74128**	**Signetics (861)**	
	SN54128	**† TI (964)**	
	SN74128	**TI (964)**	
Quad 2-Input OR Power Driver, Open Collector (to 100 V, sinks 500 mA)			
TTL	UHC/D-402	† Sprague	
	UHC/D-403	† Sprague	30
	UHC/D-502	† Sprague	
	UHC/D-503	† Sprague	
	UHP-402	Sprague	
	UHP-403	Sprague	
	UHP-502	Sprague	35
	UHP-503	Sprague	
Hex Buffer/Driver, Open Collector High Voltage Output, to 15 V			
TTL	5417	† Fairchild	
	7417	Fairchild	
	HD7417	Hitachi	
	MC7417	Motorola	40
	DM5417	† National	
	DM7417	National	
	5417	**† Signetics (860)**	
	7417	**Signetics (860)**	
	SN5417	**† TI (925)**	45
	SN7417	**TI (925)**	
Hex Buffer/Driver, Open Collector High Voltage Output, to 30 V			
TTL	5407	† Fairchild	
	7407	Fairchild	
	HD7407	Hitachi	
	MC7407	Motorola	50
	DM5407	† National	
	DM7407	National	
	5407	**† Signetics (860)**	
		(Continued)	

Function	Device	Source	Line
Hex Buffer/Driver, Open Collector High Voltage Output, to 30 V (Cont'd)			
TTL	**7407**	**Signetics (860)**	
	SN5407	**† TI (922)**	55
	SN7407	**TI (922)**	
Hex Bus Driver, 2-Line and 4-Line Enable, Three-State			
TTL-LS	M74LS367A	Mitsubishi	
Hex Inverter Buffer/Driver Open Collector High Voltage Output, to 15 V			
TTL	5416	† Fairchild	
	7416	Fairchild	
	HD7416	Hitachi	60
	MC7416	Motorola	
	DM5416	† National	
	DM7416	National	
	DS7812	† National	
	DS8812	National	65
	5416	**† Signetics (860)**	
	7416	**Signetics (860)**	
	SN5416	**† TI (925)**	
	SN7416	**TI (925)**	
Hex Inverter Buffer/Driver Open Collector High Voltage Output, to 30 V			
TTL	5406	† Fairchild	70
	7406	Fairchild	
	HD7406	Hitachi	
	MC7406	Motorola	
	DM5406	† National	
	DM7406	National	75
	5406	**† Signetics (860)**	
	7406	**Signetics (860)**	
	SN5406	**† TI (922)**	
	SN7406	**TI (922)**	
Hex Inverter/MOS Memory			
TTL	DS16149	† National	80
	DS16179	† National	
	DS36149	National	
	DS36179	National	
	SN54S436	**† TI (1035,1036)**	
	SN54S437	**† TI (1035,1036)**	85
	SN74S436	**TI (1035,1036)**	
	SN74S437	**TI (1035,1036)**	
Hex, Three-State			
TTL	DM54366	† National	
	DM54367	† National	
	DM74366	National	90
	DM74367	National	
	54366A	† Signetics	
	54367A	† Signetics	
	74366A	Signetics	
	74367A	Signetics	95
	SN54366A	† TI	
	SN54367A	† TI	
	SN74367A	TI	
TTL-ALS	**SN54ALS366**	**† TI (1023)**	
	SN74ALS366	**TI (1023)**	100
	SN74ALS366-1	**TI (1023)**	
TTL-F	74F366	Signetics	
TTL-LS	HD74LS367A	Hitachi	
Hex 2-Input AND Driver			
TTL-ALS	**SN54ALS808**	**† TI (1095)**	
	SN74ALS808	**TI (1095)**	105
TTL-AS	**SN54AS808A**	**† TI (1095)**	
	SN74AS808A	**TI (1095)**	
Hex 2-Input NAND Driver			
TTL-ALS	**SN54ALS804**	**† TI (1094)**	
	SN74ALS804	**TI (1094)**	
TTL-AS	**SN54AS804A**	**† TI (1094)**	110
	SN74AS804A	**TI (1094)**	

Function	Device	Source	Line
Hex 2-Input NOR Driver			
TTL-ALS	**SN54ALS805**	**† TI (1095)**	
	SN74ALS805	**TI (1095)**	
TTL-AS	**SN54AS805A**	**† TI (1095)**	
	SN74AS805A	**TI (1095)**	115
Hex 2-Input OR Driver			
TTL-ALS	SN54ALS832	† TI	
	SN74ALS832	TI	
TTL-AS	**SN54AS832A**	**† TI (1098)**	
	SN74AS832A	**TI (1098)**	
Flip-Flops, D-Type			
Dual Edge-Triggered			
TTL-ALS	MC54ALS878	† Motorola	120
	MC54ALS879	† Motorola	
	MC74ALS878	Motorola	
	MC74ALS879	Motorola	
	SN54ALS874	**† Motorola (823)**	
	SN54ALS876	**† Motorola (823)**	125
	SN74ALS874	**Motorola (823)**	
	SN74ALS876	**Motorola (823)**	
	DM54ALS876	† National	
	DM74ALS874	National	
	DM74ALS876	National	130
	SN54ALS874	**† TI (1106)**	
	SN54ALS876	**† TI (1107)**	
	SN54ALS878	**† TI (1108)**	
	SN54ALS879	**† TI (1108)**	
	SN74ALS874	**TI (1106)**	135
	SN74ALS876	**TI (1107)**	
	SN74ALS878	**TI (1108)**	
	SN74ALS879	**TI (1108)**	
TTL-AS	**SN54AS874**	**† TI (1106)**	
	SN54AS876	**† TI (1107)**	140
	SN54AS878	**† TI (1108)**	
	SN54AS879	**† TI (1108)**	
	SN74AS874	**TI (1106)**	
	SN74AS876	**TI (1107)**	
	SN74AS878	**TI (1108)**	145
	SN74AS879	**TI (1108)**	
Dual Gated			
TTL	DM7511	† National	
	DM7613	† National	
	DM8511	National	
	DM8613	National	150
Dual Positive Edge-Triggered with Preset and Clear			
TTL	5474	† Fairchild	
	7474	Fairchild	
	ZN5474	† Ferranti	
	ZN7474	Ferranti	
	HD7474	Hitachi	155
	MC7474	Motorola	
	DM5474	† National	
	DM7474	National	
	5474	**† Signetics (528,860)**	
	7474	**Signetics (860)**	160
	SN5474	† TI	
	SN7474	TI	
TTL-ALS	HD74ALS74	Hitachi	
	SN54ALS74	**† Motorola (823)**	
	SN74ALS74	**Motorola (823)**	165
	DM54ALS74	† National	
	DM74ALS74	National	
	SN54ALS74	**† TI (945)**	
	SN74ALS74	**TI (945)**	
TTL-AS	**SN54AS74**	**† TI (945)**	170
	SN74AS74	**TI (945)**	
TTL-F	54F74	† Fairchild	
	74F74	Fairchild	
	MC54F74	**† Motorola (822)**	
		(Continued)	

† Military Temperature Range (−55° to 125°C)

* Typical Value

Bold face indicates additional data is provided on the page noted.

© IC MASTER 1984

DIGITAL–TTL (Cont'd)

Flip-Flops, D-Type (Cont'd)

Function	Device	Source		Line
Dual Positive Edge-Triggered with Preset and Clear				
TTL-F			(Cont'd)	
	MC74F74	**Motorola**	**(822)**	
	74F74	**Signetics**	**(879)**	
TTL-H	54H74	† Fairchild		
	74H74	Fairchild		
	MC3060	Motorola		5
	MC3160	† Motorola		
	DM54H74	† National		
	DM74H74	National		
	~~**SN54H74**~~	~~† **TI**~~	~~**(945)**~~	
	SN74H74	**TI**	**(945)**	10
TTL-L	**SN54L74**	**† TI**	**(945)**	
TTL-LS	54LS74	† Fairchild		
	74LS74	Fairchild		
	HD74LS74A	Hitachi		
	M74LS74	Mitsubishi		15
	SN54LS74A	† Motorola		
	SN74LS74A	Motorola		
	DM54LS74	† National		
	DM74LS74	National		
	DM74LS74A	**Panasonic**	**(827)**	20
	54LS74	† SGS		
	74LS74	SGS		
	54LS74A	**† Signetics**	**(529)**	
	74LS74A	Signetics		
	SN54LS74A	**† TI**	**(945,946)**	25
	SN74LS74A	**TI**	**(945,946)**	
TTL-S	54S74	† Fairchild		
	74S74	Fairchild		
	HD74S74	Hitachi		
	DM74S74	National		30
	54S74	**† Signetics**	**(531)**	
	74S74	Signetics		
	SN54S74	† TI		
	SN74S74	TI		
Quad, Common Clock				
TTL	MC4015	Motorola		35
Quad Edge-Triggered with Clear, Complementary Output				
TTL	54175	† Fairchild		
	74175	Fairchild		
	ZN54175	† Ferranti		
	ZN74175	Ferranti		
	HD74175	Hitachi		40
	MC74175	Motorola		
	DM54175	† National		
	DM74175	National		
	54175	**† Signetics**	**(528,861)**	
	74175	**Signetics**	**(861)**	45
	SN54175	**† TI**	**(983)**	
	SN74175	**TI**	**(983)**	
TTL-ALS	**SN54ALS175**	**† TI**	**(983)**	
	SN74ALS175	**TI**	**(983)**	
TTL-AS	**SN54AS175**	**† TI**	**(983)**	50
	SN74AS175	**TI**	**(983)**	
TTL-F	54F175	† Fairchild		
	74F175	Fairchild		
	MC54F175	**† Motorola**	**(822)**	
	MC74F175	**Motorola**	**(822)**	55
	74F175	**Signetics**	**(879)**	
TTL-LS	54LS175	† Fairchild		
	74LS175	Fairchild		
	HD74LS175	Hitachi		
	M74LS175	Mitsubishi		60
	SN54LS175	† Motorola		
	SN74LS175	Motorola		
	DM54LS175	† National		
	DM74LS175	National		
			(Continued)	

Function	Device	Source		Line
Quad Edge-Triggered with Clear, Complementary Output				
TTL-LS			(Cont'd)	
	DM74LS175	**Panasonic**	**(827)**	65
	54LS175	† SGS		
	74LS175	SGS		
	54LS175	**† Signetics**	**(529)**	
	74LS175	Signetics		
	SN54LS175	**† TI**	**(983)**	70
	SN74LS175	**TI**	**(983)**	
TTL-S	54S175	† Fairchild		
	74S175	Fairchild		
	HD74S175	Hitachi		
	DM54S175	† National		75
	DM74S175	National		
	54S175	† Signetics		
	74S175	Signetics		
	SN54S175	**† TI**	**(983)**	
	SN74S175	TI		80
Quad I/O Register, Three-State (two terminals per flip-flop can be used as input or output)				
TTL	DM7542	† National		
	DM8542	National		
Quad, Standard TTL and Three-State Outputs				
TTL	**AM2918C**	**AMD**	**(1413)**	
	AM2918M	**† AMD**	**(1413)**	
TTL-LS	**AM25LS2518C**	**AMD**	**(1427)**	85
	AM25LS2518M	**† AMD**	**(1427)**	
	AM29LS18	**AMD**	**(1413)**	
	SN54LS388	† AMD		
	SN74LS388	AMD		
TTL-S	**AM25S18C**	**AMD**	**(1427)**	90
	AM25S18M	**† AMD**	**(1427)**	
	SN54S388	† AMD		
	SN74S388	AMD		
Quad with clear				
TTL-LS	**SN54LS171**	**† TI**	**(981)**	
	SN74LS171	**TI**	**(981)**	95
Quad with Common Clock Enable				
TTL-F	54F379	† Fairchild		
	74F379	Fairchild		
	MC54F379	**† Motorola**	**(822)**	
	MC74F379	**Motorola**	**(822)**	
	74F379	**Signetics**	**(879)**	100
TTL-LS	**AM25LS08C**	**AMD**	**(1427)**	
	AM25LS08M	**† AMD**	**(1427)**	
	AM25LS379C	AMD		
	AM25LS379M	† AMD		
	SN54LS379	† AMD		105
	SN74LS379	AMD		
	54LS379	† Fairchild		
	74LS379	Fairchild		
	SN54LS379	† Motorola		
	SN74LS379	Motorola		110
	T54LS379	† SGS		
	T74LS379	SGS		
	SN54LS379	**† TI**	**(1028)**	
	SN74LS379	**TI**	**(1028)**	
TTL-S	**AM25S08C**	**AMD**	**(1427)**	115
	AM25S08M	**† AMD**	**(1427)**	
	SN54S379	† AMD		
	SN74S379	AMD		
Quad, Dual Three-State Outputs				
TTL-LS	**AM25LS2519C**	**AMD**	**(1427)**	
	AM25LS2519M	**† AMD**	**(1427)**	120
Quad Three-State				
TTL	54173	† Fairchild		
	74173	Fairchild		
	HD74173	Hitachi		
	DM54173	† National		
	DM74173	National		125
	DM7551	† National		
			(Continued)	

Function	Device	Source		Line
Quad Three-State				
TTL			(Cont'd)	
	DM8551	National		
	54173	**† Signetics**	**(861)**	
	74173	**Signetics**	**(861)**	
	N8T10	**Signetics**	**(876)**	130
	S8T10	**† Signetics**	**(876)**	
	SN54173	**† TI**	**(982)**	
	SN74173	**TI**	**(982)**	
TTL-LS	54LS173A	† Fairchild		
	74LS173A	Fairchild		135
	SN54LS173A	† Motorola		
	SN74LS173A	Motorola		
	DM54LS173	† National		
	DM74LS173	National		
	DM74LS173	**Panasonic**	**(827)**	140
	54LS173	† Signetics		
	74LS173	Signetics		
	SN54LS173A	**† TI**	**(982)**	
	SN74LS173A	**TI**	**(982)**	
Hex Edge-Triggered with Clear				
TTL	54174	† Fairchild		145
	74174	Fairchild		
	93174C	Fairchild		
	ZN54174	† Ferranti		
	ZN74174	Ferranti		
	HD74174	Hitachi		150
	MC74174	Motorola		
	DM54174	† National		
	DM74174	National		
	54174	**† Signetics**	**(528,861)**	
	74174	**Signetics**	**(861)**	155
	SN54174	**† TI**	**(983)**	
	SN74174	**TI**	**(983)**	
TTL-ALS	MC54ALS174	† Motorola		
	MC74ALS174	Motorola		
	SN54ALS174	**† TI**	**(983)**	160
	SN74ALS174	**TI**	**(983)**	
TTL-AS	**SN54AS174**	**† TI**	**(983)**	
	SN74AS174	**TI**	**(983)**	
TTL-F	74F174	Fairchild		
	MC54F174	**† Motorola**	**(822)**	165
	MC74F174	**Motorola**	**(822)**	
	74F174	**Signetics**	**(879)**	
TTL-LS	AM25LS174C	AMD		
	AM25LS174M	† AMD		
	54LS174	† Fairchild		170
	74LS174	Fairchild		
	HD74LS174	Hitachi		
	M74LS174	Mitsubishi		
	SN54LS174	† Motorola		
	SN74LS174	Motorola		175
	DM54LS174	† National		
	DM74LS174	National		
	DM74LS174	**Panasonic**	**(827)**	
	54LS174	† SGS		
	74LS174	SGS		180
	54LS174	**† Signetics**	**(529)**	
	74LS174	Signetics		
	SN54LS174	**† TI**	**(983)**	
	SN74LS174	**TI**	**(983)**	
TTL-S	54S174	† Fairchild		185
	74S174	Fairchild		
	HD74S174	Hitachi		
	DM54S174	† National		
	DM74S174	National		
	54S174	† Signetics		190
	74S174	Signetics		
	SN54S174	**† TI**	**(983)**	
	SN74S174	**TI**	**(983)**	

† Military Temperature Range (−55° to 125°C)

* Typical Value

Bold face indicates additional data is provided on the page noted.

DIGITAL–TTL (Cont'd)

Flip-Flops, D-Type (Cont'd)

Function	Device	Source	
Hex with Common Enable			
TTL-F	54F378	† Fairchild	
	74F378	Fairchild	
	MC54F378	**† Motorola**	**(822)**
	MC74F378	**Motorola**	**(822)**
	74F378	**Signetics**	**(879)**
TTL-LS	**AM25LS07C**	**AMD**	**(1427)**
	AM25LS07M	**† AMD**	**(1427)**
	AM25LS378C	AMD	
	AM25LS378M	† AMD	
	SN54LS378	† AMD	
	SN74LS378	AMD	
	54LS378	† Fairchild	
	74LS378	Fairchild	
	SN54LS378	† Motorola	
	SN74LS378	Motorola	
	T54LS378	† SGS	
	T74LS378	SGS	
	54LS378	† Signetics	
	74LS378	Signetics	
	SN54LS378	**† TI**	**(1027)**
	SN74LS378	**TI**	**(1027)**
TTL-S	**AM25S07C**	**AMD**	**(1427)**
	AM25S07M	**† AMD**	**(1427)**
	SN54S378	† AMD	
	SN74S378	AMD	
Octal Common Clear and Enable, Three-State			
TTL-LS	**AM25LS2520C**	**AMD**	**(1427)**
	AM25LS2520M	**† AMD**	**(1427)**
	AM2920C	**AMD**	**(1414)**
	AM2920M	**† AMD**	**(1414)**
	N8TS806	**Signetics**	**(876)**
	N8TS808	**Signetics**	**(876)**
Octal Edge-Triggered, Common Clock and Enable, Three-State			
	54LS364	**† Signetics**	**(530)**
	74LS364	Signetics	
Octal Edge-Triggered, Inverting, Three-State			
TTL-ALS	**SN54ALS534**	**† Motorola**	**(823)**
	SN54ALS564	**† Motorola**	**(823)**
	SN74ALS534	**Motorola**	**(823)**
	SN74ALS564	**Motorola**	**(823)**
	SN54ALS534	**† TI**	**(1047)**
	SN54ALS564	**† TI**	**(1052)**
	SN54ALS576	**† TI**	**(1055)**
	SN54AS534	**† TI**	**(1047)**
	SN74ALS534	**TI**	**(1047)**
	SN74ALS564	**TI**	**(1052)**
	SN74ALS576	**TI**	**(1055)**
	SN74AS534	**TI**	**(1047)**
TTL-AS	**SN54AS576**	**† TI**	**(1055)**
	SN74AS576	**TI**	**(1055)**
TTL-F	54F534	† Fairchild	
	74F534	Fairchild	
	MC54F534	**† Motorola**	**(822)**
	MC74F534	**Motorola**	**(822)**
	54F534	† Signetics	
	74F534	**Signetics**	**(879)**
TTL-LS	54LS534	† Fairchild	
	74LS534	Fairchild	
	SN54LS534	**† MMI**	**(804)**
	SN74LS534	**MMI**	**(804)**
TTL-S	**SN54S534**	**MMI**	**(804)**
	SN74S534	**MMI**	**(804)**
	SN74S536	**MMI**	**(804)**
	54S534	† Signetics	
	74S534	Signetics	
Octal Edge-Triggered, with Clear			
TTL	**SN54273**	**† TI**	**(1007)**
	SN74273	**TI**	**(1007)**

(Continued)

Function	Device	Source	
Octal Edge-Triggered, with Clear			(Cont'd)
TTL-ALS	**SN54ALS273**	**† Motorola**	**(823)**
	SN74ALS273	**Motorola**	**(823)**
	DM54ALS273	† National	
	DM74ALS273	National	
	SN54ALS273	**† TI**	**(1007)**
	SN74ALS273	**TI**	**(1007)**
TTL-F	**74F273**	**Signetics**	**(879)**
TTL-LS	54LS273	† Fairchild	
	74LS273	Fairchild	
	HD74LS273	Hitachi	
	M74LS273	Mitsubishi	
	SN54LS273	**† MMI**	**(804)**
	SN74LS273	**MMI**	**(804)**
	SN54LS273	† Motorola	
	SN74LS273	Motorola	
	T74LS273	SGS	
	54LS273	**† Signetics**	**(530)**
	74LS273	Signetics	
	SN54LS273	**† TI**	**(1007)**
	SN74LS273	**TI**	**(1007)**
TTL-S	**SN54S273**	**† MMI**	**(804)**
	SN74S273	**MMI**	**(804)**
	54S273	**† Signetics**	**(531)**
	74S273	Signetics	
Octal Edge-Triggered, Three-State			
TTL-ALS	**SN54ALS374**	**† Motorola**	**(823)**
	SN54ALS574	**† Motorola**	**(823)**
	SN54ALS575	**† Motorola**	**(823)**
	SN54ALS577	**† Motorola**	**(823)**
	SN74ALS374	**Motorola**	**(823)**
	SN74ALS574	**Motorola**	**(823)**
	SN74ALS575	**Motorola**	**(823)**
	SN74ALS577	**Motorola**	**(823)**
	DM54ALS374	† National	
	DM54ALS574	† National	
	DM74ALS374	National	
	DM74ALS574	National	
	SN54ALS374	**† TI**	**(1026)**
	SN54ALS574	**† TI**	**(1054)**
	SN54ALS575	**† TI**	**(1054)**
	SN54ALS577	**† TI**	**(1055)**
	SN74ALS374	**TI**	**(1026)**
	SN74ALS574	**TI**	**(1054)**
	SN74ALS575	**TI**	**(1054)**
	SN74ALS577	**TI**	**(1055)**
TTL-AS	**SN54AS374**	**† TI**	**(1026)**
	SN54AS574	**† TI**	**(1054)**
	SN54AS575	**† TI**	**(1054)**
	SN54AS577	**† TI**	**(1055)**
	SN74AS374	**TI**	**(1026)**
	SN74AS574	**TI**	**(1054)**
	SN74AS575	**TI**	**(1054)**
	SN74AS577	**TI**	**(1055)**
TTL-F	**54F374**	**† Fairchild**	**(736)**
	74F374	**Fairchild**	**(736)**
	MC54F374	**† Motorola**	**(822)**
	MC74F374	**Motorola**	**(822)**
	54F374	**† Signetics**	**(886)**
	74F374	**Signetics**	**(879,886)**
TTL-LS	54LS374	† Fairchild	
	74LS374	Fairchild	
	74LS574	Fairchild	
	HD74LS374	Hitachi	
	M74LS374	Mitsubishi	
	SN54LS374	**† MMI**	**(804)**
	SN74LS374	**MMI**	**(804)**
	SN54LS374	† Motorola	
	SN74LS374	Motorola	
	DM54LS374	† National	
	DM74LS374	National	

(Continued)

Function	Device	Source	
Octal Edge-Triggered, Three-State			
TTL-LS			(Cont'd)
	T74LS374	SGS	
	54LS374	**† Signetics**	**(530)**
	74LS374	Signetics	
	SN54LS374	**† TI**	**(1026)**
	SN74LS374	**TI**	**(1026)**
TTL-S	AM24S374	AMD	
	SN54S374	**† MMI**	**(804)**
	SN74S374	**MMI**	**(804)**
	SN74S532	**MMI**	**(804)**
	DM54S374	† National	
	DM74S374	National	
	54S374	**† Signetics**	**(531)**
	74S374	Signetics	
	SN54S374	**† TI**	**(1026)**
	SN74S374	**TI**	**(1026)**
Octal with Enable			
TTL-ALS	**SN54ALS377**	**Motorola**	**(823)**
	SN74ALS377	**Motorola**	**(823)**
	DM54ALS377	National	
	DM74ALS377	National	
TTL-F	**74F377**	**Signetics**	**(879)**
TTL-LS	54LS377	† Fairchild	
	74LS377	Fairchild	
	M74LS377	Mitsubishi	
	SN54LS377	**† MMI**	**(804)**
	SN74LS377	**MMI**	**(804)**
	SN54LS377	† Motorola	
	SN74LS377	Motorola	
	T74LS377	SGS	
	54LS377	**† Signetics**	**(530)**
	74LS377	Signetics	
	SN54LS377	**† TI**	**(1027)**
	SN74LS377	**TI**	**(1027)**
TTL-S	**SN54S377**	**† MMI**	**(804)**
	SN74S377	**MMI**	**(804)**
4-Bit Parallel Input, Parallel Output			
TTL-F	**MC54F195**	**† Motorola**	**(822)**
	MC74F195	**Motorola**	**(822)**
8-Bit Parallel, Inverting			
TTL-AS	**SN54AS826**	**† TI**	**(1097)**
	SN74AS826	**TI**	**(1097)**
8-Bit Parallel, Non-inverting			
TTL-AS	**SN54AS825**	**† TI**	**(1097)**
	SN74AS825	**TI**	**(1097)**
9-Bit Parallel, Inverting			
TTL-AS	**SN54AS824**	**† TI**	**(1097)**
	SN74AS824	**TI**	**(1097)**
9-Bit Parallel, Non-inverting			
TTL-AS	**SN54AS823**	**† TI**	**(1096)**
	SN74AS823	**TI**	**(1096)**
10-Bit Parallel, Inverting			
TTL-AS	**SN54AS822**	**† TI**	**(1096)**
	SN74AS822	**TI**	**(1096)**
10-Bit Parallel, Non-inverting			
TTL-AS	**SN54AS821**	**† TI**	**(1096)**
	SN74AS821	**TI**	**(1096)**

Flip-Flops, J-K Type

Function	Device	Source	
AND Gated, Edge-Triggered with Preset and Clear			
TTL	5470	† Fairchild	
	7470	Fairchild	
	ZN5470	† Ferranti	
	ZN7470	Ferranti	
	MC7470	Motorola	
	DM5470	† National	
	DM7470	National	
	S8270	† Signetics	

(Continued)

† Military Temperature Range (−55° to 125°C)

* Typical Value

Bold face indicates additional data is provided on the page noted.

© IC MASTER 1984

DIGITAL–TTL (Cont'd)

Flip-Flops, J-K Type (Cont'd)

Function	Device	Source	Line
AND Gated, Edge-Triggered with Preset and Clear			
TTL			(Cont'd)
	SN5470	**† TI**	**(943)**
	SN7470	**TI**	**(943)**
AND Gated Master-Slave with Data Lockout			
TTL	**SN54110**	**† TI**	**(958)**
	SN74110	**TI**	**(958)**
AND Gated Master-Slave with Preset and Clear			
TTL	5472	† Fairchild	5
	7472	Fairchild	
	ZN5472	† Ferranti	
	ZN7472	Ferranti	
	HD7472	Hitachi	
	MC7472	Motorola	10
	DM5472	† National	
	DM7472	National	
	SN5472	**† TI**	**(944)**
	SN7472	**TI**	**(944)**
TTL-H	54H72	† Fairchild	15
	74H72	Fairchild	
	DM54H72	† National	
	DM74H72	National	
	SN54H72	**† TI**	**(944)**
	SN54L72	**† TI**	**(944)** 20
	SN74H72	**TI**	**(944)**
Master-Slave			
TTL	54104	† Fairchild	
	54105	† Fairchild	
	9000M	† Fairchild	
	9001C	Fairchild	25
	9001M	† Fairchild	
Master-Slave, AND-OR Input			
TTL-H	54H71	† Fairchild	
	DM54H71	† National	
	DM74H71	National	
	SN54H71	**† TI**	**(943)** 30
	SN74H71	**TI**	**(943)**
TTL-L	**SN54L71**	**† TI**	**(943)**
Negative Edge-Triggered, AND Input			
TTL-H	54H102	† Fairchild	
	SN54H102	**† TI**	**(956)**
	SN74H102	**TI**	**(956)** 35
Negative Edge-Triggered, AND-OR Input			
TTL-H	54H101	† Fairchild	
	74H101	Fairchild	
	SN54H101	**† TI**	**(956)**
	SN74H101	**TI**	**(956)**
Dual JK/D Gated Master-Slave			
TTL	DM7512	† National	40
	DM8512	National	
Dual J-K Positive Edge-Triggered, Preset and Clear			
TTL	9024C	Fairchild	
	9024M	† Fairchild	
	DM54109	† National	
	DM74109	National	45
	54109	**† Signetics**	**(860)**
	74109	**Signetics**	**(860)**
	SN54109	**† TI**	**(958)**
	SN74109	**TI**	**(958)**
TTL-ALS	HD74ALS109	Hitachi	50
	SN54ALS109	**† Motorola**	**(823)**
	SN74ALS109	**Motorola**	**(823)**
	DM54ALS109	† National	
	DM74ALS109	National	
	SN54ALS109	**† TI**	**(958)** 55
	SN74ALS109	**TI**	**(958)**
TTL-AS	**SN54AS109**	**† TI**	**(958)**
	SN74AS109	**TI**	**(958)**
TTL-F	54F109	† Fairchild	
			(Continued)

Function	Device	Source	Line
Dual J-K Positive Edge-Triggered, Preset and Clear			
TTL-F			(Cont'd)
	74F109	Fairchild	60
	MC54F109	**† Motorola**	**(822)**
	MC74F109	**Motorola**	**(822)**
	74F109	**Signetics**	**(879)**
TTL-LS	54LS109	† Fairchild	
	74LS109	Fairchild	65
	HD74LS109	Hitachi	
	M74LS109A	Mitsubishi	
	SN54LS109A	† Motorola	
	SN74LS109A	Motorola	
	DM54LS109	† National	70
	DM74LS109	National	
	DN74LS109	**Panasonic**	
			(826,834)
	54LS109	† SGS	
	74LS109	SGS	
	54LS109	† Signetics	75
	74LS109A	Signetics	
	SN54LS109A	**† TI**	**(958)**
	SN74LS109A	**TI**	**(958)**
TTL-S	54S109	† Fairchild	
	74S109	Fairchild	80
Dual J-K with Preset, Common Clock and Common Clear			
TTL-H	54H78	† Fairchild	
	DM54H78	† National	
	DM74H78	National	
	SN54H78	**† TI**	**(947)**
	SN74H78	**TI**	**(947)** 85
TTL-L	**SN54L78**	**† TI**	**(947)**
TTL-LS	HD74LS78	Hitachi	
	SN54LS78A	† Motorola	
	SN74LS78A	Motorola	
	DM54LS78	† National	90
	DM74LS78	National	
	DN74LS78	**Panasonic**	
			(826,834)
	SN54LS78A	**† TI**	**(947)**
	SN74LS78A	**TI**	**(947)**
Dual Master-Slave with Clear			
TTL	54107	† Fairchild	95
	5473	† Fairchild	
	74107	Fairchild	
	7473	Fairchild	
	ZN54107	† Ferranti	
	ZN5473	† Ferranti	100
	ZN74107	Ferranti	
	ZN7473	Ferranti	
	HD74107	Hitachi	
	HD7473	Hitachi	
	MC74107	Motorola	105
	MC7473	Motorola	
	DM54107	† National	
	DM5473	† National	
	DM74107	National	
	DM7473	National	110
	54107	**† Signetics**	**(860)**
	5473	**† Signetics**	
			(528,860)
	74107	**Signetics**	**(860)**
	7473	**Signetics**	**(860)**
	SN54107	**† TI**	**(957)** 115
	SN5473	**† TI**	**(944)**
	SN74107	**TI**	**(957)**
	SN7473	**† TI**	**(944)**
TTL-H	54H73	† Fairchild	
	74H73	Fairchild	120
	MC3061	Motorola	
	MC3062	Motorola	
	MC3161	† Motorola	
	MC3162	† Motorola	
			(Continued)

Function	Device	Source	Line
Dual Master-Slave with Clear			
TTL-H			(Cont'd)
	DM54H73	† National	125
	DM74H73	National	
	SN54H73	**† TI**	**(944)**
	SN74H73	**TI**	**(944)**
TTL-L	**SN54L73**	**† TI**	**(944)**
TTL-LS	74LS107	Fairchild	130
	HD74LS107	Hitachi	
	HD74LS73	Hitachi	
	M74LS107A	Mitsubishi	
	M74LS73A	Mitsubishi	
	SN54LS107A	† Motorola	135
	SN54LS73A	† Motorola	
	SN74LS107A	Motorola	
	SN74LS73A	Motorola	
	DM54LS107A	† National	
	DM54LS73A	† National	140
	DM74LS107A	National	
	DM74LS73A	National	
	DN74LS107	**Panasonic**	
			(826,834)
	DN74LS73	**Panasonic**	
			(826,834)
	54LS107	**† Signetics**	**(529)** 145
	54LS73	**† Signetics**	**(529)**
	74LS107	Signetics	
	74LS73	Signetics	
	SN54LS107A	**† TI**	**(957)**
	SN54LS73A	**† TI**	**(944)** 150
	SN74LS107A	**TI**	**(957)**
	SN74LS73A	**TI**	**(944)**
Dual Master-Slave with Data Lockout			
TTL	**SN54111**	**† TI**	**(959)**
	SN74111	**TI**	**(959)**
Dual Master-Slave with Preset and Clear			
TTL	5476	† Fairchild	155
	7476	Fairchild	
	ZN5476	† Ferranti	
	ZN7476	Ferranti	
	HD7476	Hitachi	
	MC7476	Motorola	160
	DM5476	† National	
	DM7476	National	
	5476	**† Signetics**	
			(528,860)
	7476	**Signetics**	**(860)**
	SN5476	**† TI**	**(946)** 165
	SN7476	**TI**	**(946)**
TTL-H	54H76	† Fairchild	
	DM54H76	† National	
	DM74H76	National	
	SN54H76	**† TI**	**(946)** 170
	SN74H76	**TI**	**(946)**
TTL-LS	HD74LS76	Hitachi	
	M74LS76A	Mitsubishi	
	SN54LS76A	† Motorola	
	SN74LS76A	Motorola	175
	DM54LS76	† National	
	DM74LS76	National	
	DN74LS76	**Panasonic**	
			(826,834)
	54LS76	† Signetics	
	74LS76	Signetics	180
	SN54LS76A	**† TI**	**(946)**
	SN74LS76A	**TI**	**(946)**
Dual Negative Edge-Triggered, Preset, Common Clear, Common Clock			
TTL-H	54H108	† Fairchild	
	74H108	Fairchild	
	DM54H108	† National	185
	DM74H108	National	
			(Continued)

† Military Temperature Range (−55° to 125°C)

* Typical Value

Bold face indicates additional data is provided on the page noted.

DIGITAL–TTL (Cont'd)

Flip-Flops, J-K Type (Cont'd)

Function	Device	Source	Line
Dual Negative Edge-Triggered, Preset, Common Clear, Common Clock			
TTL-H		(Cont'd)	
	SN54H108	**† TI**	**(958)**
	SN74H108	**TI**	**(958)**
Dual Negative Edge-Triggered, Separate Preset and Clock, (no clear)			
TTL-ALS	DM54ALS113	† National	
	SN54ALS113	**† TI**	**(959)**
	SN74ALS113	**TI**	**(959)**
TTL-AS	**SN54AS113**	**† TI**	**(959)**
	SN74AS113	**TI**	**(959)**
TTL-F	54F113	† Fairchild	
	74F113	Fairchild	
	MC54F113	**† Motorola**	**(822)**
	MC74F113	**Motorola**	**(822)**
	74F113	**Signetics**	**(879)**
TTL-LS	54LS113	† Fairchild	
	74LS113	Fairchild	
	HD74LS113	Hitachi	
	M74LS113A	Mitsubishi	
	SN54LS113A	† Motorola	
	SN74LS113A	Motorola	
	DM54LS113A	† National	
	DM74LS113A	National	
	DN74LS113	**Panasonic**	**(826,834)**
	54LS113	† SGS	
	74LS113	SGS	
	54LS113	† Signetics	
	74LS113	Signetics	
	SN54LS113A	† TI	
	SN74LS113A	**TI**	**(959)**
TTL-S	54S113	† Fairchild	
	74S113	Fairchild	
	HD74S113	Hitachi	
	DM54S113	† National	
	DM74S113	National	
	54S113	**† Signetics**	**(531)**
	74S113	Signetics	
	SN54S113	**† TI**	**(959)**
	SN74S113	**TI**	**(959)**
Dual Negative Edge-Triggered, with Clear			
TTL-H	54H103	† Fairchild	
	74H103	Fairchild	
	DM54H103	† National	
	DM74H103	National	
	SN54H103	**† TI**	**(956)**
	SN74H103	**TI**	**(956)**
Dual Negative Edge-Triggered with Preset and Clear			
TTL-ALS	**SN54ALS112**	**† TI**	**(959)**
	SN74ALS112	**TI**	**(959)**
TTL-AS	**SN54AS112**	**† TI**	**(959)**
	SN74AS112	**TI**	**(959)**
TTL-F	54F112	† Fairchild	
	74F112	Fairchild	
	MC54F112	**† Motorola**	**(822)**
	MC74F112	**Motorola**	**(822)**
	74F112	**Signetics**	**(879)**
TTL-H	54H106	† Fairchild	
	74H106	Fairchild	
	DM54H106	† National	
	DM74H106	National	
	SN54H106	**† TI**	**(957)**
	SN74H106	**TI**	**(957)**
TTL-LS	54LS112	† Fairchild	
	74LS112	Fairchild	
	HD74LS112	Hitachi	
	M74LS112A	Mitsubishi	
		(Continued)	

Function	Device	Source	Line
Dual Negative Edge-Triggered with Preset and Clear			
TTL-LS		(Cont'd)	
	SN54LS112A	† Motorola	
	SN74LS112A	Motorola	
	DM54LS112	† National	
	DM74LS112	National	
	DN74LS112	**Panasonic**	**(826,834)**
	54LS112	Signetics	
	74LS112	Signetics	
	SN54LS112A	**† TI**	**(959)**
	SN74LS112A	**TI**	**(959)**
TTL-S	54S112	† Fairchild	
	74S112	Fairchild	
	HD74S112	Hitachi	
	DM54S112	† National	
	DM74S112	National	
	54S112	**† Signetics**	**(531)**
	74S112	Signetics	
	SN54S112	**† TI**	**(959)**
	SN74S112	**TI**	**(959)**
Dual Negative Edge-Triggered with Preset, Common Clock and Common Clear			
TTL-ALS	**SN54ALS114**	**† TI**	**(960)**
	SN74ALS114	**TI**	**(960)**
TTL-AS	**SN54AS114**	**† TI**	**(960)**
	SN74AS114	**TI**	**(960)**
TTL-F	54F114	† Fairchild	
	74F114	Fairchild	
	MC54F114	**† Motorola**	**(822)**
	MC74F114	**Motorola**	**(822)**
	74F114	**Signetics**	**(879)**
TTL-LS	54LS114	† Fairchild	
	74LS114	Fairchild	
	HD74LS114	Hitachi	
	M74LS114A	Mitsubishi	
	SN54LS114A	† Motorola	
	SN74LS114A	Motorola	
	DM54LS114A	† National	
	DM74LS114A	National	
	DN74LS114	**Panasonic**	**(826,834)**
	54LS112	† SGS	
	74LS112	SGS	
	T54LS114	† SGS	
	T74LS114	SGS	
	SN54LS114A	**† TI**	**(960)**
	SN74LS114A	**TI**	**(960)**
TTL-S	54S114	† Fairchild	
	HD74S114	Hitachi	
	DM54S114	† National	
	DM74S114	National	
	SN54S114	**† TI**	**(960)**
	SN74S114	**TI**	**(960)**
Quad J-K Edge-Triggered with Clear			
TTL	**SN54376**	**† TI**	**(1027)**
	SN74376	**TI**	**(1027)**
Quad J-K Edge-Triggered with Preset and Clear			
TTL	**SN54276**	**† TI**	**(1008)**
	SN74276	**TI**	**(1008)**

Flip-Flops, P-Type

Function	Device	Source	Line
Hex Edge-Triggered with Clear			
TTL-F	54F174	† Fairchild	

Gates, AND

Function	Device	Source	Line
Dual 4-Input Power			
TTL-H	MC3026	Motorola	
	MC3126	† Motorola	

Function	Device	Source	Line
Dual 4-Input			
TTL	5421	† Fairchild	
	7421	Fairchild	
	7421	**Signetics**	**(860)**
TTL-ALS	HD74ALS21	Hitachi	
	SN54ALS21	**† Motorola**	**(822)**
	SN74ALS21	**Motorola**	**(822)**
	SN54ALS21	**† TI**	**(927)**
	SN74ALS21	**TI**	**(927)**
TTL-AS	**SN54AS21**	**† TI**	**(927)**
	SN74AS21	**TI**	**(927)**
TTL-H	54H21	† Fairchild	
	74H21	Fairchild	
	DM54H21	† National	
	DM74H21	National	
	SN54H21	**† TI**	**(927)**
	SN74H21	**TI**	**(927)**
TTL-LS	54LS21	† Fairchild	
	74LS21	Fairchild	
	HD74LS21	Hitachi	
	M74LS21	Mitsubishi	
	SN54LS21	† Motorola	
	SN74LS21	Motorola	
	DM54LS21	† National	
	DM74LS21	National	
	DN74LS21	**Panasonic**	**(826,834)**
	54LS21	† SGS	
	74LS21	SGS	
	54LS21	† Signetics	
	74LS21	Signetics	
	SN54LS21	**† TI**	**(927)**
	SN74LS21	**TI**	**(927)**
Triple 3-Input, Open Collector			
TTL-ALS	**SN54ALS15**	**† Motorola**	**(822)**
	SN74ALS15	**Motorola**	**(822)**
	SN54ALS15	**† TI**	**(925)**
	SN74ALS15	**TI**	**(925)**
TTL-H	**SN54H15**	**† TI**	**(925)**
	SN74H15	**TI**	**(925)**
TTL-LS	54LS15	† Fairchild	
	74LS15	Fairchild	
	HD74LS15	Hitachi	
	M74LS15	Mitsubishi	
	SN54LS15	† Motorola	
	SN74LS15	Motorola	
	DM54LS15	† National	
	DM74LS15	National	
	DN74LS15	**Panasonic**	**(826,834)**
	DN75LS15	Panasonic	
	54LS15	† SGS	
	74LS15	SGS	
	SN54LS15	**† TI**	**(925)**
	SN74LS15	**TI**	**(925)**
TTL-S	54S15	† Fairchild	
	74S15	Fairchild	
	HD74S15	Hitachi	
	DM54S15	† National	
	DM74S15	National	
	SN54S15	**† TI**	**(925)**
	SN74S15	**TI**	**(925)**
Triple 3-Input			
TTL	5411	† Fairchild	
	7411	Fairchild	
	HD74LS11	Hitachi	
	DM5411	† National	
	DM7411	National	
	7411	**Signetics**	**(860)**
TTL-ALS	SN54ALS11	† Motorola	
		(Continued)	

† Military Temperature Range (−55° to 125°C)

* Typical Value

Bold face indicates additional data is provided on the page noted.

© IC MASTER 1984

DIGITAL–TTL (Cont'd)

Gates, AND (Cont'd)

Function	Device	Source	Line
Tripie 3-Input			
TTL-ALS		(Cont'd)	
	SN74ALS11	**Motorola** (822)	
	SN54ALS1011	† TI (1116)	
	SN54ALS11	† TI (923)	
	SN74ALS1011	TI (1116)	
	SN74ALS11	TI (923)	5
TTL-AS	**SN54AS11**	† TI (923)	
	SN74AS11	TI (923)	
TTL-F	54F11	† Fairchild	
	74F11	Fairchild	
	MC54F11	† **Motorola** (822)	10
	MC74F11	**Motorola** (822)	
	74F11	**Signetics** (879)	
TTL-H	54H11	† Fairchild	
	74H11	Fairchild	
	DM54H11	† National	15
	DM74H11	National	
	SN54H11	† TI (923)	
	SN74H11	TI (923)	
TTL-LS	54LS11	† Fairchild	
	74LS11	Fairchild	20
	M74LS11	Mitsubishi	
	SN54LS11	† **Motorola** (822)	
	SN74LS11	Motorola	
	DM54LS11	† National	
	DM74LS11	National	25
	DM74LS11	† **Panasonic** (826,834)	
	54LS11	† SGS	
	74LS11	SGS	
	54LS11	† Signetics	
	74LS11	Signetics	30
	SN54LS11	TI (923)	
	SN74LS11	† TI (923)	
TTL-S	54S11	† Fairchild	
	74S11	Fairchild	
	HD74S11	Hitachi	35
	DM54S11	† National	
	DM74S11	National	
	54S11	† **Signetics** (531)	
	74S11	Signetics	
	SN54S11	† TI	40
	SN74S11	TI (923)	
Quad 2-Input, Open Collector			
TTL	5409	† Fairchild	
	7409	Fairchild	
	ZN5409	† Ferranti	
	ZN7409	Ferranti	45
	HD7409	Hitachi	
	MC7409	Motorola	
	DM5409	† National	
	DM7409	National	
	SN5409	† TI (923)	50
	SN7409	TI (923)	
TTL-ALS	HD74ALS09	Hitachi	
	SN54ALS09	† Motorola	
	SN74ALS09	**Motorola** (822)	
	SN54ALS09	† TI (923)	55
	SN74ALS09	TI (923)	
TTL-H	54H09	† Fairchild	
	74H09	Fairchild	
TTL-LS	54LS09	† Fairchild	
	74LS09	Fairchild	60
	HD74LS09	Hitachi	
	M74LS09	Mitsubishi	
	SN54LS09	† **Motorola** (822)	
	SN74LS09	Motorola	
	DM54LS09	† National	65
	DM74LS09	National	
		(Continued)	

Function	Device	Source	Line
Quad 2-Input, Open Collector			
TTL-LS		(Cont'd)	
	DM74S09	National	
	DM74LS09	† **Panasonic** (826,834)	
	54LS09	† SGS	
	74LS09	SGS	70
	54LS09	† Signetics	
	74LS09	Signetics	
	SN54LS09	† TI (923)	
	SN74LS09	† TI (923)	
TTL-S	54S09	† Fairchild	75
	DM54S09	† National	
	SN54S09	† TI (923)	
	SN74S09	TI (923)	
Quad 2-Input			
TTL	5408	† Fairchild	
	7408	Fairchild	80
	ZN5408	† Ferranti	
	ZN7408	Ferranti	
	HD7408	Hitachi	
	MC7408	Motorola	
	DM5408	† National	85
	DM7408	National	
	5408	**Signetics** (860)	
	7408	**Signetics** (860)	
	SN5408	† TI (922)	
	SN7408	TI (922)	90
TTL-ALS	HD74ALS08	Hitachi	
	SN54ALS08	† Motorola	
	SN54ALS576	† **Motorola** (823)	
	SN74ALS08	**Motorola** (822)	
	SN74ALS576	**Motorola** (823)	95
	DM54ALS08	† National	
	DM54ALS576	† National	
	DM74ALS08	National	
	DM74ALS576	National	
	SN54ALS08	† TI (921)	100
	SN54ALS1008	† TI (1116)	
	SN74ALS08	TI (922)	
	SN74ALS1008	TI (1116)	
TTL-AS	**SN54AS08**	† TI (922)	
	SN54AS1008	† TI (1116)	105
	SN74AS08	TI (922)	
	SN74AS1008	TI (1116)	
TTL-F	54F08	† Fairchild	
	74F08	Fairchild	
	MC54F08	† **Motorola** (822)	110
	MC74F08	**Motorola** (822)	
	74F08	**Signetics** (879)	
TTL-H	54H08	† Fairchild	
	74H08	Fairchild	
	MC3001	Motorola	115
	MC3101	† Motorola	
	DM54H08	† National	
	DM74H08	National	
TTL-LS	54LS08	† Fairchild	
	74LS08	Fairchild	120
	HD74LS08	Hitachi	
	M74LS08	Mitsubishi	
	SN54LS08	† **Motorola** (822)	
	SN74LS08	Motorola	
	DM54LS08	† National	125
	DM74LS08	National	
	DM74LS08	**Panasonic** (826,834)	
	54LS08	† SGS	
	74LS08	SGS	
	54LS08	† **Signetics** (529)	130
	74LS08	Signetics	
	SN54LS08	† TI (922)	
	SN74LS08	TI (922)	
		(Continued)	

Function	Device	Source	Line
Quad 2-Input		(Cont'd)	
TTL-S	54S08	† Fairchild	
	74S08	Fairchild	135
	DM54S08	† National	
	DM74S08	National	
	54S08	† **Signetics** (531)	
	74S08	Signetics	
	SN54S08	† TI (921)	140
	SN74S08	TI (922)	
Hex 2-Input Line Driver/Buffer			
TTL-AS	SN54AS808	† TI	
	SN74AS808	TI	

Gates, NAND

Function	Device	Source	Line
Dual 2-Input			
TTL-ALS	**SN54ALS8003**	† TI (1128)	
	SN74ALS8003	TI (1128)	145
Dual 4-Input Buffer			
TTL	5440	† Fairchild	
	7440	Fairchild	
	ZN5440	† Ferranti	
	ZN7440	Ferranti	
	HD7440	Hitachi	150
	MC7440	Motorola	
	DM5440	† National	
	DM7440	National	
	DM9009C	National	
	5440	† **Signetics** (860)	155
	7440	**Signetics** (860)	
	SN5440	† TI (933)	
	SN7440	TI (933)	
TTL-ALS	**SN54ALS40**	† **Motorola** (823)	
	SN74ALS40	**Motorola** (823)	160
	SN54ALS40	† TI (933)	
	SN74ALS40	TI (933)	
TTL-F	**74F40**	**Signetics** (879)	
TTL-H	54H40	† Fairchild	
	74H40	Fairchild	165
	MC3025	Motorola	
	DM54H40	† National	
	DM74H40	National	
	SN54H40	† TI (933)	
	SN74H40	TI (933)	170
TTL-LS	54LS40	† Fairchild	
	74LS40	Fairchild	
	HD74LS40	Hitachi	
	M74LS40	Mitsubishi	
	SN54LS40	† Motorola	175
	SN74LS40	Motorola	
	DM54LS40	† National	
	DM74LS40	National	
	DM74LS40	**Panasonic** (826,834)	
	54LS40	† SGS	180
	74LS40	SGS	
	54LS40	† Signetics	
	74LS40	Signetics	
	SN54LS40	† TI (933)	
	SN74LS40	TI (933)	185
TTL-S	54S40	† Fairchild	
	74S40	Fairchild	
	HD74S40	Hitachi	
	DM54S40	† National	
	DM74S40	National	190
	54S40	† **Signetics** (531)	
	74S40	Signetics	
	SN54S40	† TI (933)	
	SN74S40	TI (933)	

† Military Temperature Range (−55° to 125°C)

* Typical Value

Bold face indicates additional data is provided on the page noted.

DIGITAL–TTL (Cont'd)

Gates, NAND (Cont'd)

Function	Device	Source	Line
Dual 4-Input, Open Collector			
TTL	5422	† Fairchild	
	7422	Fairchild	
	HD7422	Hitachi	
	SN5422	**† TI (927)**	
	SN7422	**TI (927)**	5
TTL-ALS	**SN54ALS22**	**† Motorola (822)**	
	SN74ALS22	**Motorola (822)**	
	SN54ALS22	**† TI (927)**	
	SN74ALS22	**TI (927)**	
TTL-H	54H22	† Fairchild	10
	74H22	Fairchild	
	DM54H22	† National	
	DM74H22	National	
	SN54H22	**† TI (927)**	
	SN74H22	**TI (927)**	15
TTL-LS	54LS22	† Fairchild	
	74LS22	Fairchild	
	HD74LS22	Hitachi	
	M74LS22	Mitsubishi	
	SN54LS22	† Motorola	20
	SN74LS22	Motorola	
	DM54LS22	† National	
	DM74LS22	National	
	DM74LS22	**Panasonic (826,834)**	
	54LS22	† SGS	25
	74LS22	SGS	
	SN54LS22	**† TI (927)**	
	SN74LS22	**TI (927)**	
TTL-S	54S22	† Fairchild	
	74S22	Fairchild	30
	HD74S22	Hitachi	
	DM54S22	† National	
	DM74S22	National	
	SN54S22	**† TI (927)**	
	SN74S22	**TI (927)**	35
Dual 4-Input			
TTL	5420	† Fairchild	
	7420	Fairchild	
	ZN5420	† Ferranti	
	ZN7420	Ferranti	
	HD7420	Hitachi	40
	MC7420	Motorola	
	DM5420	† National	
	DM7420	National	
	DM9004C	National	
	5420	**† Signetics (528,860)**	45
	7420	**Signetics (860)**	
	SN5420	**† TI (926)**	
	SN7420	**TI (926)**	
TTL-ALS	HD74ALS20	Hitachi	
	SN54ALS20	**† Motorola (822)**	50
	SN74ALS20	**Motorola (822)**	
	SN54ALS1020	**† TI (1117)**	
	SN54ALS20	**† TI (926)**	
	SN74ALS1020	**TI (1117)**	
	SN74ALS20	**TI (926)**	55
TTL-AS	**SN54AS20**	**† TI (926)**	
	SN74AS20	**TI (926)**	
TTL-F	54F20	† Fairchild	
	74F20	Fairchild	
	MC54F20	**† Motorola (822)**	60
	MC74F20	**Motorola (822)**	
	54F20	† Signetics	
	74F20	**Signetics (879)**	
TTL-H	54H20	† Fairchild	
	74H20	Fairchild	65
	DM54H20	† National	

(Continued)

Function	Device	Source	Line
Dual 4-Input			
TTL-H		(Cont'd)	
	DM74H20	National	
	SN54H20	**† TI (926)**	
	SN74H20	**TI (926)**	
TTL-L	**SN54L20**	**† TI (926)**	70
TTL-LS	54LS20	† Fairchild	
	74LS20	Fairchild	
	HD74LS20	Hitachi	
	M74LS20	Mitsubishi	
	SN54LS20	† Motorola	75
	SN74LS20	Motorola	
	DM54LS20	† National	
	DM74LS20	National	
	DM74LS20	**Panasonic (826,834)**	
	54LS20	† SGS	80
	74LS20	SGS	
	54LS20	**† Signetics (529)**	
	74LS20	Signetics	
	SN54LS20	**† TI (926)**	
	SN74LS20	**TI (926)**	85
TTL-S	54S20	† Fairchild	
	74S20	Fairchild	
	HD74S20	Hitachi	
	DM54S20	† National	
	DM74S20	National	90
	54S20	† Signetics	
	74S20	Signetics	
	SN54S20	**† TI (926)**	
	SN74S20	**TI (926)**	
Dual 5-Input			
TTL	DM7092	† National	95
	DM8092	National	
Triple 3-Input, Open Collector			
TTL	5412	† Fairchild	
	7412	Fairchild	
	ZN5412	† Ferranti	
	ZN7412	Ferranti	100
	HD7412	Hitachi	
	SN5412	**† TI (924)**	
	SN7412	**TI (924)**	
TTL-ALS	**SN54ALS12**	**† Motorola (822)**	
	SN74ALS12	**Motorola (822)**	105
	SN54ALS12	**† TI (924)**	
	SN74ALS12	**TI (924)**	
TTL-LS	54LS12	† Fairchild	
	74LS12	Fairchild	
	HD74LS12	Hitachi	110
	M74LS12	Mitsubishi	
	SN54LS12	† Motorola	
	SN74LS12	Motorola	
	DM54LS12	† National	
	DM74LS12	National	115
	DM74LS12	**Panasonic (826,834)**	
	SN54LS12	**† TI (924)**	
	SN74LS12	**TI (924)**	
TTL-S	HD74S12	Hitachi	
Triple 3-Input			
TTL	5410	† Fairchild	120
	7410	Fairchild	
	ZN5410	† Ferranti	
	ZN7410	Ferranti	
	HD7410	Hitachi	
	MC5410	† Motorola	125
	MC54F10	**† Motorola (822)**	
	MC7410	Motorola	
	DM5410	† National	
	DM7410	National	
	DM9003C	National	130
	5410	**† Signetics (860)**	

(Continued)

Function	Device	Source	Line
Triple 3-Input			
TTL		(Cont'd)	
	7410	**Signetics (860)**	
	SN5410	**† TI (923)**	
	SN54L10	**† TI (923)**	
	SN7410	**TI (923)**	135
TTL-ALS	SN54ALS10	† Motorola	
	SN74ALS10	**Motorola (822)**	
	SN54ALS10	**† TI (923)**	
	SN54ALS1010	**† TI (1116)**	
	SN74ALS10	**TI (923)**	140
	SN74ALS1010	**TI (1116)**	
TTL-AS	**SN54AS10**	**† TI (923)**	
	SN74AS10	**TI (923)**	
TTL-F	54F10	† Fairchild	
	74F10	Fairchild	145
	MC74F10	**Motorola (822)**	
	74F10	**Signetics (879)**	
TTL-H	54H10	† Fairchild	
	74H10	Fairchild	
	DM54H10	† National	150
	DM74H10	National	
	SN54H10	**† TI (923)**	
	SN74H10	**TI (923)**	
TTL-LS	54LS10	† Fairchild	
	74LS10	Fairchild	155
	HD74LS10	Hitachi	
	M74LS10	Mitsubishi	
	SN54LS10	**† Motorola (822)**	
	SN74LS10	Motorola	
	DM54LS10	† National	160
	DM74LS10	National	
	DM74LS10	**Panasonic (826,834)**	
	54LS10	† SGS	
	74LS10	SGS	
	54LS10	**† Signetics (529)**	165
	74LS10	Signetics	
	SN54LS10	**† TI (923)**	
	SN74LS10	**TI (923)**	
TTL-S	54S10	† Fairchild	
	74S10	Fairchild	170
	HD74S10	Hitachi	
	DM54S10	† National	
	DM74S10	National	
	54S10	**† Signetics (531)**	
	74S10	Signetics	175
	SN54S10	**† TI (923)**	
	SN74S10	**TI (923)**	
Quad 2-Input Buffer, Open Collector			
TTL	5438	† Fairchild	
	7438	Fairchild	
	7439	Fairchild	180
	ZN5438	† Ferranti	
	ZN7438	Ferranti	
	HD7438	Hitachi	
	MC7438	Motorola	
	DM5438	† National	185
	DM7438	National	
	5438	**† Signetics (860)**	
	5439	**† Signetics (860)**	
	7438	**Signetics (860)**	
	7439	**Signetics (860)**	190
	SN5438	**† TI (932)**	
	SN5439	**† TI (932)**	
	SN7438	**TI (932)**	
	SN7439	**TI (932)**	
TTL-ALS	**SN54ALS38**	**† Motorola (823)**	195
	SN74ALS38	**Motorola (823)**	
	SN54ALS38	**† TI (932)**	
	SN74ALS38	**TI (932)**	

(Continued)

† Military Temperature Range (−55° to 125°C)

* Typical Value

Bold face indicates additional data is provided on the page noted.

© IC MASTER 1984

DIGITAL-TTL (Cont'd)

Gates, NAND (Cont'd)

Function	Device	Source		Line
Quad 2-Input Buffer, Open Collector			(Cont'd)	
TTL-F	74F35	Signetics		
	74F38	**Signetics**	**(879)**	
TTL-LS	54LS38	† Fairchild		
	74LS38	Fairchild		
	HD74LS38	Hitachi		5
	M74LS38	Mitsubishi		
	SN54LS38	† Motorola		
	SN74LS38	Motorola		
	DM54LS38	† National		
	DM74LS38	National		10
	DN74LS38	**Panasonic**	**(826,834)**	
	54LS38	† Signetics		
	74LS38	Signetics		
	SN54LS38	**† TI**	**(932)**	
	SN74LS38	**TI**	**(932)**	15
TTL-S	54S38	† Signetics		
	74S38	Signetics		
	SN54S38	**† TI**	**(932)**	
	SN74S38	**TI**	**(932)**	
Quad 2-Input Buffer, Open Collector, to 15 V				
TTL-LS	54LS26	† Fairchild		20
	74LS26	Fairchild		
	HD74LS26	Hitachi		
	SN54LS26	† Motorola		
	SN74LS26	Motorola		
	DM54LS26	† National		25
	DM74LS26	National		
	DN74LS26	**Panasonic**	**(826,834)**	
	T74LS26	SGS		
	54LS26	† Signetics		
	74LS26	Signetics		30
	SN54LS26	**† TI**	**(928)**	
	SN74LS26	**TI**	**(928)**	
Quad 2-Input, Buffer, Three-State				
TTL	DM7099	† National		
	DM8099	National		
Quad 2-Input Buffer				
TTL	5437	† Fairchild		35
	7437	Fairchild		
	ZN5437	† Ferranti		
	ZN7437	Ferranti		
	HD7437	Hitachi		
	MC7437	Motorola		40
	DM5437	† National		
	DM7091	† National		
	DM7437	National		
	DM8091	National		
	5437	**† Signetics**	**(860)**	45
	7437	**Signetics**	**(860)**	
	SN5437	**† TI**	**(932)**	
	SN7437	**TI**	**(932)**	
TTL-ALS	**SN54ALS37**	**† Motorola**	**(823)**	
	SN74ALS37	**Motorola**	**(823)**	50
	SN54ALS37	**† TI**	**(932)**	
	SN74ALS37	**TI**	**(932)**	
TTL-F	**74F37**	**Signetics**	**(879)**	
TTL-LS	54LS37	† Fairchild		
	74LS37	Fairchild		55
	HD74LS37	Hitachi		
	M74LS37	Mitsubishi		
	SN54LS37	† Motorola		
	SN74LS37	Motorola		
	DM54LS37	† National		60
	DM74LS37	National		
	DN74LS37	**Panasonic**	**(826,834)**	
	54LS37	† SGS		
			(Continued)	

Function	Device	Source		Line
Quad 2-Input Buffer				
TTL-LS			(Cont'd)	
	74LS37	SGS		
	54LS37	**† Signetics**	**(529)**	65
	74LS37	Signetics		
	SN54LS37	**† TI**	**(932)**	
	SN74LS37	**TI**	**(932)**	
TTL-S	54S37	† Signetics		
	74S37	Signetics		70
	SN54S37	**† TI**	**(932)**	
	SN74S37	**TI**	**(932)**	
Quad 2-Input, Open Collector				
TTL	5401	† Fairchild		
	5403	† Fairchild		
	7401	Fairchild		75
	7403	Fairchild		
	ZN5401	† Ferranti		
	ZN5403	† Ferranti		
	ZN7401	Ferranti		
	ZN7403	Ferranti		80
	HD7401	Hitachi		
	HD7403	Hitachi		
	MC7401	Motorola		
	MC7403	Motorola		
	DM5401	† National		85
	DM5403	† National		
	DM7401	National		
	DM7403	National		
	DM9012C	National		
	5403	**† Signetics**	**(860)**	90
	7403	**Signetics**	**(860)**	
	N8881	**Signetics**	**(876)**	
	SN5401	**† TI**	**(920)**	
	SN5403	**† TI**	**(921)**	
	SN54L03	**† TI**	**(921)**	95
	SN7401	**TI**	**(920)**	
	SN7403	**TI**	**(921)**	
TTL-ALS	HD74ALS01	Hitachi		
	HD74ALS03	Hitachi		
	SN54ALS01	† Motorola		100
	SN54ALS03	† Motorola		
	SN74ALS01	**Motorola**	**(822)**	
	SN74ALS03	**Motorola**	**(822)**	
	SN54ALS01	**† TI**	**(920)**	
	SN54ALS03	**† TI**	**(921)**	105
	SN54ALS1003	**† TI**	**(1115)**	
	SN74ALS01	**TI**	**(920)**	
	SN74ALS03	**TI**	**(921)**	
	SN74ALS1003	**TI**	**(1115)**	
TTL-H	54H01	† Fairchild		110
	74H01	Fairchild		
	DM54H01	† National		
	DM74H01	National		
	SN54H01	**† TI**	**(920)**	
	SN74H01	**TI**	**(920)**	115
TTL-LS	54LS03	† Fairchild		
	74LS03	Fairchild		
	HD74LS01	Hitachi		
	HD74LS03	Hitachi		
	M74LS03	Mitsubishi		120
	SN54LS01	**† Motorola**	**(822)**	
	SN54LS03	**† Motorola**	**(822)**	
	SN74LS01	Motorola		
	SN74LS03	Motorola		
	DM54LS01	† National		125
	DM54LS03	† National		
	DM74LS01	National		
	DM74LS03	† National		
	DN74LS01	**† Panasonic**	**(826,834)**	
	DN74LS03	**† Panasonic**	**(826,834)**	130
			(Continued)	

Function	Device	Source		Line
Quad 2-Input, Open Collector				
TTL-LS			(Cont'd)	
	54LS03	† SGS		
	74LS03	† SGS		
	54LS01	† Signetics		
	54LS03	† Signetics		
	74LS01	Signetics		135
	SN54LS01	**† TI**	**(920)**	
	SN54LS03	**† TI**	**(921)**	
	SN74LS01	**† TI**	**(920)**	
	SN74LS03	**† TI**	**(921)**	
TTL-S	74S03	Fairchild		140
	HD74S03	Hitachi		
	DM54S03	† National		
	DM74S03	National		
	54LS38	† SGS		
	74LS38	SGS		145
	74S03	Signetics		
	SN54S03	**† TI**	**(921)**	
	SN74S03	**TI**	**(921)**	
Quad 2-Input				
TTL	5400	† Fairchild		
	7400	Fairchild		150
	ZN5400	† Ferranti		
	ZN7400	Ferranti		
	HD7400	Hitachi		
	MC7400	Motorola		
	DM5400	† National		155
	DM7400	National		
	DM9002C	National		
	5400	**† Signetics**	**(528,860)**	
	7400	**Signetics**	**(860)**	
	SN5400	**† TI**	**(920)**	160
	SN7400	**TI**	**(920)**	
TTL-ALS	HD74ALS00	Hitachi		
	SN54ALS00	† Motorola		
	SN74ALS00	**Motorola**	**(822)**	
	DM54ALS00	† National		165
	DM74ALS00	National		
	SN54ALS00	† TI		
	SN54ALS1000	**† TI**	**(1114)**	
	SN74ALS00	TI		
	SN74ALS1000	**TI**	**(1114)**	170
TTL-AS	**SN54AS00**	**† TI**	**(920)**	
	SN54AS1000	**† TI**	**(1114)**	
	SN74AS00	**TI**	**(920)**	
	SN74AS1000	**TI**	**(1114)**	
TTL-F	54F00	† Fairchild		175
	74F00	Fairchild		
	MC54F00	**† Motorola**	**(822)**	
	MC74F00	**Motorola**	**(822)**	
	54F00	Signetics		
	74F00	**Signetics**	**(879)**	180
TTL-H	54H00	† Fairchild		
	74H00	Fairchild		
	MC3000	Motorola		
	MC3100	† Motorola		
	DM54H00	† National		185
	DM74H00	National		
	SN54H00	**† TI**	**(920)**	
	SN74H00	**TI**	**(920)**	
TTL-L	**SN54L00**	**† TI**	**(920)**	
TTL-LS	54LS00	† Fairchild		190
	74LS00	Fairchild		
	HD74LS00	Hitachi		
	M74LS00	Mitsubishi		
	SN54LS00	**† Motorola**	**(822)**	
	SN74LS00	Motorola		195
	DM54LS00	† National		
	DM74LS00	National		
			(Continued)	

† Military Temperature Range (−55° to 125°C)

* Typical Value

Bold face indicates additional data is provided on the page noted.

DIGITAL-TTL (Cont'd)

Gates, NAND (Cont'd)

Function	Device	Source	Line
Quad 2-Input			
TTL-LS		(Cont'd)	
	DN74LS00	**Panasonic (826,834)**	
	54LS00	† SGS	
	74LS00	SGS	
	54LS00	**† Signetics (529)**	
	74LS00	Signetics	5
	SN54LS00	**† TI (920)**	
	SN74LS00	**TI (920)**	
TTL-S	54S00	† Fairchild	
	74S00	† Fairchild	
	HD74S00	Hitachi	10
	DM54S00	† National	
	DM74S00	National	
	54S00	**† Signetics (531)**	
	74S00	Signetics	
	SN54S00	**† TI (920)**	15
	SN74S00	**TI (920)**	
Hex 2-Input Line Driver/Buffer			
TTL-AS	SN54AS804	† TI	
	SN74AS804	TI	
8-Input			
TTL	5430	† Fairchild	
	7430	Fairchild	20
	ZN5430	† Ferranti	
	ZN7430	Ferranti	
	HD7430	Hitachi	
	MC7430	Motorola	
	DM5430	† National	25
	DM7430	National	
	7430	**Signetics (860)**	
	SN5430	**† TI (929)**	
	SN7430	**TI (929)**	
TTL-ALS	**SN54ALS30**	**† TI (929)**	30
	SN74ALS30	**TI (929)**	
TTL-AS	**SN54AS30**	**† TI (929)**	
	SN74AS30	**TI (929)**	
TTL-H	54H30	† Fairchild	
	74H30	Fairchild	35
	DM54H30	† National	
	DM74H30	National	
	SN54H30	**† TI (929)**	
	SN74H30	**TI (929)**	
TTL-L	**SN54L30**	**† TI (929)**	40
TTL-LS	54LS30	† Fairchild	
	74LS30	Fairchild	
	HD74LS30	Hitachi	
	M74LS30	Mitsubishi	
	SN54LS30	† Motorola	45
	SN74LS30	Motorola	
	DM54LS30	† National	
	DM74LS30	National	
	DN74LS30	**Panasonic (826,834)**	
	54LS30	† SGS	50
	74LS30	SGS	
	54LS30	† Signetics	
	74LS30	Signetics	
	SN54LS30	**† TI (929)**	
	SN74LS30	**TI (929)**	55
TTL-S	54S30	† Fairchild	
	74S30	Fairchild	
	DM54S30	† National	
	DM74S30	National	
	SN54S30	**† TI (929)**	60
	SN74S30	**TI (929)**	

Function	Device	Source	Line
12-Input, Three-State			
TTL-S	54S134	† Fairchild	
	74S134	Fairchild	
	HD74S134	Hitachi	
	DM54S134	† National	65
	DM74S134	National	
	54S134	† Signetics	
	74S134	Signetics	
	SN54S134	**† TI (965)**	
	SN74S134	**TI (965)**	70
13-Input			
TTL-ALS	**SN54ALS133**	**† TI (965)**	
	SN74ALS133	**TI (965)**	
TTL-LS	54LS133	† Fairchild	
	74LS133	Fairchild	
	M74LS133	Mitsubishi	75
	SN54LS133	† Motorola	
	SN74LS133	Motorola	
	54LS133	† SGS	
	74LS133	SGS	
TTL-S	54S133	† Fairchild	80
	74S133	Fairchild	
	HD74S133	Hitachi	
	DM54S133	† National	
	DM74S133	National	
	54S133	**† Signetics (531)**	85
	74S133	Signetics	
	SN54S133	**† TI (965)**	
	SN74S133	**TI (965)**	

Gates, AND-OR

Function	Device	Source	Line
2-2-2-3-Input, Expandable			
TTL-H	54H52	† Fairchild	
	74H52	Fairchild	90
	DM54H52	† National	
	DM74H52	National	
	SN54H52	**† TI (937)**	
	SN74H52	**TI (937)**	

Gates, AND-OR-Invert

Function	Device	Source	Line
Dual 2-Wide 2-Input (one gate is expandable)			
TTL	5450	† Fairchild	95
	7450	Fairchild	
	ZN5450	† Ferranti	
	ZN7450	Ferranti	
	HD7450	Hitachi	
	MC7450	Motorola	100
	DM5450	† National	
	DM7450	National	
	DM9005C	National	
	5450	**† Signetics (860)**	
	7450	**Signetics (860)**	105
	SN5450	**† TI (936)**	
	SN7450	**TI (936)**	
TTL-H	54H50	† Fairchild	
	74H50	Fairchild	
	DM54H50	† National	110
	DM74H50	National	
	SN54H50	**† TI (936)**	
	SN74H50	**TI (936)**	
Dual 2-Wide 2-Input			
TTL	5451	† Fairchild	
	7451	Fairchild	115
	ZN5451	† Ferranti	
	ZN7451	Ferranti	
	HD7451	Hitachi	
	MC7451	Motorola	
	DM5451	† National	120
	DM7451	National	
	5451	**† Signetics (860)**	
	7451	**Signetics (860)**	

(Continued)

Function	Device	Source	Line
Dual 2-Wide 2-Input			
TTL		(Cont'd)	
	SN5451	† TI	
	SN54L51	**† TI (936)**	125
	SN7451	TI	
TTL-ALS	**SN54ALS51**	**† Motorola (823)**	
	SN74ALS51	**Motorola (823)**	
TTL-H	54H51	† Fairchild	
	74H51	Fairchild	130
	DM54H51	† National	
	DM74H51	National	
	SN54H51	**† TI (936)**	
	SN74H51	**TI (936)**	
TTL-LS	54LS51	† Fairchild	135
	74LS51	Fairchild	
	HD74LS51	Hitachi	
	SN54LS51	† Motorola	
	SN74LS51	Motorola	
	DM54LS51	† National	140
	DM74LS51	National	
	DN74LS51	**Panasonic (826,834)**	
	LS5451	† SGS	
	LS7451	SGS	
	54LS51	† Signetics	145
	74LS51	Signetics	
	SN54LS51	**† TI (936)**	
	SN74LS51	**TI (936)**	
TTL-S	54S51	† Fairchild	
	74S51	Fairchild	150
	HD74S51	Hitachi	
	DM54S51	† National	
	DM74S51	National	
	54S51	**† Signetics (531)**	
	74S51	Signetics	155
	SN54S51	**† TI (936)**	
	SN74S51	**TI (936)**	
Dual 4-Input Expander (for 54/7423, 54/7450, 54/7453)			
TTL	5460	† Fairchild	
	7460	Fairchild	
	HD7460	Hitachi	160
	MC7460	Motorola	
	DM5460	† National	
	DM7460	National	
	5460	† Signetics	
	SN5460	**† TI (940)**	165
	SN7460	**TI (940)**	
Dual 4-Input Extender (for 9005, 9008)			
TTL	DM9006C	National	
2-Wide, 4-Input			
TTL-ALS	MC54ALS55	† Motorola	
	MC74ALS55	Motorola	
TTL-L	**SN54L55**	**† TI (939)**	170
TTL-LS	54LS55	† Fairchild	
	74LS55	Fairchild	
	HD74LS55	Hitachi	
	SN54LS55	† Motorola	
	SN74LS55	Motorola	175
	DM54LS55	† National	
	DM74LS55	National	
	DN74LS55	**Panasonic (826,834)**	
	54LS55	† SGS	
	74LS55	SGS	180
	SN54LS55	**† TI (939)**	
	SN74LS55	**TI (939)**	
2-Wide, 4-Input, Expandable			
TTL-H	54H55	† Fairchild	
	74H55	Fairchild	
	DM54H55	† National	185
	DM74H55	National	

(Continued)

† Military Temperature Range (−55° to 125°C)

* Typical Value

Bold face indicates additional data is provided on the page noted.

© IC MASTER 1984

DIGITAL–TTL (Cont'd)

Gates, AND-OR-Invert (Cont'd)

Function	Device	Source	
2-Wide, 4-input, Expandable			
TTL-H			(Cont'd)
	SN54H55	**† TI**	**(939)**
	SN74H55	**TI**	**(939)**
2-2-2-3-Input			
TTL-ALS	SN54ALS54	† Motorola	
	SN74ALS54	Motorola	
TTL-H	54H54	† Fairchild	
	74H54	Fairchild	
	DM54H54	† National	
	DM74H54	National	
	SN54H54	**† TI**	**(938)**
	SN74H54	**TI**	**(938)**
2-2-2-3-Input, Expandable			
TTL	DM9008C	National	
TTL-H	54H53	† Fairchild	
	74H53	Fairchild	
	DM54H53	† National	
	DM74H53	National	
	SN54H53	**† TI**	**(937)**
	SN74H53	**TI**	**(937)**
4-Wide 2-Input			
TTL	5454	† Fairchild	
	7454	Fairchild	
	ZN5454	† Ferranti	
	ZN7454	Ferranti	
	HD7454	Hitachi	
	MC7454	Motorola	
	DM5454	† National	
	DM7454	National	
	SN5454	**† TI**	**(938)**
	SN54L54	**† TI**	**(938)**
	SN7454	**TI**	**(938)**
4-Wide 2-Input, Expandable			
TTL	5453	† Fairchild	
	7453	Fairchild	
	ZN5453	† Ferranti	
	ZN7453	Ferranti	
	HD7453	Hitachi	
	MC7453	Motorola	
	DM5453	† National	
	DM7453	National	
	SN5453	**† TI**	**(937)**
	SN7453	**TI**	**(937)**
4-Wide 2-2-3-3-Input			
TTL-LS	54LS54	† Fairchild	
	74LS54	Fairchild	
	HD74LS54	Hitachi	
	SN54LS54	† Motorola	
	SN74LS54	Motorola	
	DM54LS54	† National	
	DM74LS54	National	
	DN74LS54	**Panasonic**	**(826.834)**
	54LS54	† SGS	
	74LS54	SGS	
	54LS54	† Signetics	
	74LS54	Signetics	
	SN54LS54	**† TI**	**(938)**
	SN74LS54	**TI**	**(938)**
4-2-3-2-Input			
TTL-F	54F64	† Fairchild	
	74F64	Fairchild	
	MC54F64	**† Motorola**	**(822)**
	MC74F64	**Motorola**	**(822)**
	54F64	† Signetics	
	74F64	**Signetics**	**(879)**
TTL-S	54S64	† Fairchild	
	74S64	† Fairchild	
	HD74S64	Hitachi	
			(Continued)

Function	Device	Source	
4-2-3-2-Input			
TTL-S			(Cont'd)
	DM54S64	† National	
	DM74S64	National	
	54S64	† Signetics	
	74S64	† Signetics	
	SN54S64	**TI**	**(941)**
	SN74S64	**TI**	**(941)**
4-2-3-2-Input, Open Collector			
TTL-S	54S65	† Fairchild	
	74S65	† Fairchild	
	HD74S65	† Hitachi	
	DM54S65	† National	
	DM74S65	† National	
	54S65	† Signetics	
	SN54S65	† TI	
	SN74S65	† TI	

Gates, OR

Function	Device	Source	
Quad 2-Input			
TTL	5432	† Fairchild	
	7432	Fairchild	
	ZN5432	† Ferranti	
	ZN7432	Ferranti	
	HD7432	Hitachi	
	DM5432	† National	
	DM7432	National	
	5432	**† Signetics**	**(528.860)**
	7432	**Signetics**	**(860)**
	SN5432	**† TI**	**(930)**
	SN7432	**TI**	**(930)**
TTL-ALS	**SN54ALS32**	**† Motorola**	**(822)**
	SN74ALS32	**Motorola**	**(822)**
	DM54ALS32	† National	
	DM74ALS32	National	
	SN54ALS1032	**† TI**	**(1117)**
	SN54ALS32	**† TI**	**(930)**
	SN74ALS1032	**TI**	**(1117)**
	SN74ALS32	**TI**	**(930)**
TTL-AS	**SN54AS1032**	**† TI**	**(1117)**
	SN54AS32	**† TI**	**(930)**
	SN74AS1032	**TI**	**(1117)**
	SN74AS32	**TI**	**(930)**
TTL-F	54F32	† Fairchild	
	74F32	Fairchild	
	MC54F32	**† Motorola**	**(822)**
	MC74F32	**Motorola**	**(822)**
	74F32	**Signetics**	**(879)**
TTL-H	MC3003	Motorola	
TTL-LS	54LS32	† Fairchild	
	74LS32	Fairchild	
	HD74LS32	Hitachi	
	M74LS32	Mitsubishi	
	SN54LS32	† Motorola	
	SN74LS32	Motorola	
	DM54LS32	† National	
	DM74LS32	National	
	DN74LS32	**Panasonic**	**(826.834)**
	54LS32	† SGS	
	74LS32	SGS	
	54LS32	**† Signetics**	**(529)**
	74LS32	Signetics	
	SN54LS32	**† TI**	**(930)**
	SN74LS32	**TI**	**(930)**
TTL-S	54S32	† Fairchild	
	74S32	Fairchild	
	DM54S32	† National	
	DM74S32	National	
	54S32	† Signetics	
			(Continued)

Function	Device	Source	
Quad 2-Input			
TTL-S			(Cont'd)
	74S32	Signetics	
	SN54S32	**† TI**	**(930)**
	SN74S32	**TI**	**(930)**
Hex 2-Input Line Driver/Buffer			
TTL-ALS	**SN54ALS832**	**† TI**	**(1098)**
	SN74ALS832	**TI**	**(1098)**
TTL-AS	SN54AS832	† TI	
	SN74AS832	TI	

Gates, NOR

Function	Device	Source	
Dual 4-Input, with Strobe			
TTL	5425	† Fairchild	
	7425	Fairchild	
	ZN5425	† Ferranti	
	ZN7425	Ferranti	
	HD7425	Hitachi	
	MC7425	Motorola	
	DM5425	† National	
	DM7425	National	
	5425	**† Signetics**	**(860)**
	7425	**Signetics**	**(860)**
	SN5425	† TI	
	SN7425	**TI**	**(928)**
Dual 4-Input, with Strobe, Expandable (see 54/7460 expander)			
TTL	5423	† Fairchild	
	7423	Fairchild	
	HD7423	Hitachi	
	MC7423	Motorola	
	DM5423	† National	
	DM7423	National	
	SN5423	**† TI**	**(927)**
	SN7423	**TI**	**(927)**
Dual 4-Input			
TTL	**N8815**	**Signetics**	**(876)**
Dual 5-Input			
TTL-ALS	SN54ALS260	† TI	
TTL-LS	54LS260	† Fairchild	
	74LS260	Fairchild	
	SN54LS260	† Motorola	
	SN74LS260	Motorola	
	DN74LS260	**Panasonic**	**(826.834)**
	T54LS260	† SGS	
	T74LS260	SGS	
	54LS260A	† Signetics	
	74LS260	Signetics	
	SN54LS260A	† TI	
TTL-S	54S260	† Fairchild	
	74S260	Fairchild	
	DM74S260	National	
	54S260	† Signetics	
	74S260	Signetics	
	SN54S260	**† TI**	**(1006)**
	SN74S260	**TI**	**(1006)**
Triple 3-Input			
TTL	5427	† Fairchild	
	7427	Fairchild	
	ZN5427	† Ferranti	
	ZN7427	Ferranti	
	HD7427	Hitachi	
	MC7427	Motorola	
	DM5427	† National	
	DM7427	National	
	5427	**† Signetics**	**(860)**
	7427	**Signetics**	**(860)**
	SN5427	**† TI**	**(929)**
	SN7427	**TI**	**(929)**
TTL-ALS	**SN54ALS27**	**† Motorola**	**(822)**
			(Continued)

† Military Temperature Range (−55° to 125°C)

* Typical Value

Bold face indicates additional data is provided on the page noted.

DIGITAL–TTL (Cont'd)

Gates, NOR (Cont'd)

Function	Device	Source	
Triple 3-Input			
TTL-ALS			(Cont'd)
	SN74ALS27	**Motorola**	**(822)**
	SN54ALS27	**† TI**	**(929)**
	SN74ALS27	**TI**	**(929)**
TTL-AS	**SN54AS27**	**† TI**	**(929)**
	SN74AS27	**TI**	**(929)**
TTL-LS	54LS27	† Fairchild	
	74LS27	Fairchild	
	HD74LS27	Hitachi	
	M74LS27	Mitsubishi	
	SN54LS27	† Motorola	
	SN74LS27	Motorola	
	DM54LS27	† National	
	DM74LS27	National	
	DN74LS27	**Panasonic**	**(826,834)**
	54LS27	† SGS	
	74LS27	SGS	
	54LS27	† Signetics	
	74LS27	Signetics	
	SN54LS27	**† TI**	**(929)**
	SN74LS27	**TI**	**(929)**
Quad 2-Input Buffer, Open Collector			
TTL	**5433**	**† Signetics**	**(860)**
	7433	**Signetics**	**(860)**
	SN5433	**† TI**	**(930)**
	SN7433	**TI**	**(930)**
TTL-ALS	**SN54ALS33**	**† Motorola**	**(822)**
	SN74ALS33	**Motorola**	**(822)**
	SN54ALS33	**† TI**	**(930)**
	SN74ALS33	**TI**	**(930)**
TTL-LS	54LS33	† Fairchild	
	74LS33	Fairchild	
	SN54LS33	† Motorola	
	SN74LS33	Motorola	
	DN74LS33	**Panasonic**	**(826,834)**
	T54LS33	† SGS	
	T74LS33	SGS	
	54LS33	† Signetics	
	74LS33	Signetics	
	SN54LS33	**† TI**	**(930)**
	SN74LS33	**TI**	**(930)**
Quad 2-Input (54/7428 devices are also buffers)			
TTL	5402	† Fairchild	
	7402	Fairchild	
	ZN5402	† Ferranti	
	ZN5428	† Ferranti	
	ZN7402	Ferranti	
	ZN7428	Ferranti	
	HD7402	Hitachi	
	MC7402	Motorola	
	DM5402	† National	
	DM7402	National	
	5402	**† Signetics**	**(860)**
	5428	**† Signetics**	**(860)**
	7402	**Signetics**	**(860)**
	7428	**Signetics**	**(860)**
	SN5402	**† TI**	**(920)**
	SN5428	**† TI**	**(929)**
	SN7402	**TI**	**(920)**
	SN7428	**TI**	**(929)**
TTL-ALS	SN54ALS02	† Motorola	
	SN54ALS28	**† Motorola**	**(822)**
	SN74ALS02	**Motorola**	**(822)**
	SN74ALS28	**Motorola**	**(822)**
	DM54ALS02	† National	
	DM74ALS02	National	
	SN54ALS02	**† TI**	**(920)**

(Continued)

Function	Device	Source	
Quad 2-Input (54/7428 devices are also buffers)			
TTL-ALS			(Cont'd)
	SN54ALS1002	**† TI**	**(1114)**
	SN54ALS28	**† TI**	**(929)**
	SN74ALS02	**TI**	**(920)**
	SN74ALS1002	**TI**	**(1114)**
	SN74ALS28	**TI**	**(929)**
TTL-AS	**SN54AS02**	**† TI**	**(920)**
	SN54AS1002	**† TI**	**(1114)**
	SN54AS1036	**† TI**	**(1118)**
	SN74AS02	**TI**	**(920)**
	SN74AS1002	**TI**	**(1114)**
	SN74AS1036	**TI**	**(1118)**
TTL-F	54F02	† Fairchild	
	74F02	Fairchild	
	MC54F02	**† Motorola**	**(822)**
	MC74F02	**Motorola**	**(822)**
	74F02	**Signetics**	**(879)**
TTL-L	**SN54L02**	**† TI**	**(920)**
TTL-LS	54LS02	† Fairchild	
	54LS28	† Fairchild	
	74LS02	Fairchild	
	74LS28	Fairchild	
	HD74LS02	Hitachi	
	M74LS02	Mitsubishi	
	SN54LS02	**† Motorola**	**(822)**
	SN54LS28	† Motorola	
	SN74LS02	Motorola	
	SN74LS28	Motorola	
	DM54LS02	† National	
	DM74LS02	National	
	DN74LS02	**Panasonic**	**(826,834)**
	DN74LS28	**Panasonic**	**(826,834)**
	54LS02	† SGS	
	74LS02	SGS	
	T54LS28	† SGS	
	T74LS28	SGS	
	54LS02	**† Signetics**	**(529)**
	54LS28	† Signetics	
	74LS02	Signetics	
	SN54LS02	**† TI**	**(920)**
	SN54LS28	**† TI**	**(929)**
	SN74LS02	**TI**	**(920)**
	SN74LS28	**TI**	**(929)**
TTL-S	54S02	† Fairchild	
	74S02	Fairchild	
	HD74S02	Hitachi	
	DM54S02	† National	
	DM74S02	National	
	54S02	**† Signetics**	**(531)**
	74S02	Signetics	
	SN54S02	**† TI**	**(920)**
	SN74S02	**TI**	**(920)**
Quad 2-Input			
TTL-H	MC3002	Motorola	
	MC3102	† Motorola	
Hex 2-Input Line Driver/Buffer			
TTL-AS	SN54AS805	† TI	
	SN74AS805	TI	

Gates, OR/NOR

Function	Device	Source	
Quad 2-Input			
TTL-S	54S135	† Fairchild	
	74S135	Fairchild	
	HD74S135	Hitachi	
	DM54S135	† National	
	DM74S135	National	
	54S135	† Signetics	
	74S135	Signetics	

(Continued)

Function	Device	Source	
Quad 2-Input			
TTL-S			(Cont'd)
	SN54S135	**† TI**	**(966)**
	SN74S135	**TI**	**(966)**

Gates, Exclusive OR

Function	Device	Source	
Quad 2-Input, Open Collector			
TTL	HD74136	Hitachi	
	MC74136	Motorola	
	S8241	Signetics	
	SN54136	**† TI**	**(966)**
	SN74136	**TI**	**(966)**
TTL-LS	54LS136	Fairchild	
	74LS136	Fairchild	
	HD74LS136	Hitachi	
	M74LS136	Mitsubishi	
	SN54LS136	† Motorola	
	SN74LS136	Motorola	
	DM54LS136	† National	
	DM74LS136	National	
	DN74LS136	**Panasonic**	**(826,834)**
	54LS136	† SGS	
	74LS136	SGS	
	54LS136	† Signetics	
	74LS136	Signetics	
	SN54LS136	**† TI**	**(966)**
	SN74LS136	**TI**	**(966)**
TTL-S	DM54S136	† National	
	DM74S136	National	
	N82S41	**Signetics**	**(876)**
Quad 2-Input, Totem Pole Outputs			
TTL	5486	† Fairchild	
	7486	Fairchild	
	ZN5486	† Ferranti	
	ZN7486	Ferranti	
	HD7486	Hitachi	
	MC7241	Motorola	
	MC7486	Motorola	
	MC8241	† Motorola	
	DM5486	National	
	DM7486	National	
	DM74LS386	National	
	RC8241	Raytheon	
	RM8241	† Raytheon	
	5486	**† Signetics**	**(860)**
	7486	**Signetics**	**(860)**
	SN5486	**† TI**	**(950)**
	SN7486	**TI**	**(950)**
TTL-ALS	**SN54ALS86**	**† TI**	**(951)**
	SN74ALS86	**TI**	**(951)**
TTL-F	54F86	† Fairchild	
	74F86	Fairchild	
	MC54F86	**† Motorola**	**(822)**
	MC74F86	**Motorola**	**(822)**
	54F86	† Signetics	
	74F86	**Signetics**	**(879)**
TTL-L	**SN54L86**	**† TI**	**(950)**
TTL-LS	54LS386	† Fairchild	
	54LS86	† Fairchild	
	74LS386	Fairchild	
	74LS86	Fairchild	
	HD74LS386	Hitachi	
	HD74LS86	Hitachi	
	M74LS386	Mitsubishi	
	M74LS86	Mitsubishi	
	SN54LS386	† Motorola	
	SN54LS86	† Motorola	
	SN74LS386	Motorola	
	SN74LS86	Motorola	
	DM54LS386	† National	

(Continued)

† Military Temperature Range (−55° to 125°C)

* Typical Value

Bold face indicates additional data is provided on the page noted.

© IC MASTER 1984

DIGITAL–TTL (Cont'd)

Function	Device	Source		Line
Gates, Exclusive OR (Cont'd)				
Quad 2-Input, Totem Pole Outputs				
TTL-LS			(Cont'd)	
	DM54LS86	† National		
	DM74LS86	National		
	DN74LS386	**Panasonic**	**(826,834)**	
	DN74LS86	**Panasonic**	**(826,834)**	
	54LS86	† SGS		5
	74LS86	SGS		
	54LS86	**† Signetics**	**(529)**	
	74LS86	Signetics		
	SN54LS386	**† TI**	**(1030)**	
	SN54LS86	**† TI**	**(950)**	10
	SN74LS386	**TI**	**(1030)**	
	SN74LS86	**TI**	**(950)**	
TTL-S	54S86	† Fairchild		
	74S86	Fairchild		
	HD74S86	Hitachi		15
	DM74S86	National		
	54S86	**† Signetics**	**(531)**	
	74S86	Signetics		
	SN54S86	**† TI**	**(950)**	
	SN74S86	**TI**	**(950)**	20
Quad 2-Input				
TTL-H	MC3021	Motorola		
	MC3121	† Motorola		
Gates, Exclusive NOR				
Quad 2-Input, Open Collector				
TTL	9386C	Fairchild		
	9386M	† Fairchild		
	MC7242	Motorola		25
	MC8242	† Motorola		
	RC8242	Raytheon		
	RM8242	† Raytheon		
	N8242	**Signetics**	**(876)**	
	N9386	**Signetics**	**(876)**	30
	S9386	† Signetics		
TTL-LS	54LS266	† Fairchild		
	74LS266	Fairchild		
	HD74LS266	Hitachi		
	M74LS266	Mitsubishi		35
	SN54LS266	† Motorola		
	SN74LS266	Motorola		
	DM54LS266	† National		
	DM74LS266	National		
	DN74LS266	**Panasonic**	**(826,834)**	40
	54LS266	† SGS		
	74LS266	SGS		
	54LS266	**† Signetics**	**(530)**	
	N8242	Signetics		
	S8242	† Signetics		45
	SN54LS266	**† TI**	**(1007)**	
	SN74LS266	**TI**	**(1007)**	
TTL-S	**N82S42**	**Signetics**	**(876)**	
Quad 2-Input				
TTL-H	MC3022	Motorola		
	MC3122	† Motorola		50
Gates, Miscellaneous				
Quad Inverter and Dual 2-Input NAND				
TTL	DM7090	† National		
	DM8090	National		

Function	Device	Source		Line
Latches				
Dual 4-Bit Addressable				
TTL-LS	54LS256	† Fairchild		
	74LS256	Fairchild		
	M74LS256	Mitsubishi		55
	SN54LS256	† Motorola		
	SN74LS256	Motorola		
	T54LS256	† SGS		
	T74LS256	SGS		
	74LS256	Signetics		60
Dual 4-Bit with Clear				
TTL	9308C	Fairchild		
	9308M	† Fairchild		
	MC8308	Motorola		
	54116	**† Signetics**	**(860)**	
	74116	**Signetics**	**(860)**	65
	SN29308	TI		
	SN39308	† TI		
	SN54116	**† TI**	**(960)**	
	SN74116	**TI**	**(960)**	
Dual 4-Bit				
TTL	MC74100	Motorola		70
	SN54100	**† TI**	**(955)**	
	SN74100	**TI**	**(955)**	
TTL-ALS	**SN54ALS873**	**† Motorola**	**(823)**	
	SN74ALS873	**Motorola**	**(823)**	
	DM54ALS873	† National		75
	DM74ALS873	National		
	SN54ALS873	**† TI**	**(1106)**	
	SN74ALS873	**TI**	**(1106)**	
TTL-AS	**SN54AS873**	**† TI**	**(1106)**	
	SN74AS873	**TI**	**(1106)**	80
Quad Bistable, Complementary Outputs				
TTL	5475	† Fairchild		
	7475	Fairchild		
	ZN5475	† Ferranti		
	ZN7475	Ferranti		
	HD7475	Hitachi		85
	MC7475	Motorola		
	DM5475	† National		
	DM7475	National		
	5475	**† Signetics**	**(860)**	
	7475	**Signetics**	**(860)**	90
	SN5475	**† TI**	**(946)**	
	SN7475	**TI**	**(946)**	
TTL-L	**SN54L75**	**† TI**	**(946)**	
TTL-LS	54LS375	† Fairchild		
	74LS375	Fairchild		95
	HD74LS375	Hitachi		
	HD74LS75	Hitachi		
	M74LS375	Mitsubishi		
	M74LS75	Mitsubishi		
	SN54LS375	† Motorola		100
	SN54LS75	† Motorola		
	SN74LS375	Motorola		
	SN74LS75	Motorola		
	DM54LS75	† National		
	DM74LS75	National		105
	DN74LS75	**Panasonic**	**(827)**	
	54LS375	**† Signetics**	**(530)**	
	54LS75	**† Signetics**	**(529)**	
	74LS375	Signetics		
	74LS75	Signetics		110
	SN54LS375	**† TI**	**(1026)**	
	SN54LS75	† TI		
	SN74LS375	**TI**	**(1026)**	
	SN74LS75	TI		
Quad Bistable, Single Output				
TTL	5477	† Fairchild		115
	MC7477	Motorola		
	SN5477	**† TI**	**(947)**	
			(Continued)	

Function	Device	Source		Line
Quad Bistable, Single Output			(Cont'd)	
TTL-LS	HD74LS77	Hitachi		
	SN54LS77	† Motorola		
	SN74LS77	Motorola		120
	DM54LS377	† National		
	DM74LS77	National		
	SN54LS77	**† TI**	**(947)**	
	SN74LS77	**TI**	**(947)**	
Quad Multifunction				
TTL	9314C	Fairchild		125
	9314M	† Fairchild		
	MC8314	Motorola		
	MC9314	† Motorola		
	S9314	† Signetics		
Quad Set-Reset				
TTL	54279	† Fairchild		130
	74279	Fairchild		
	HD74279	Hitachi		
	54279	**† Signetics**	**(862)**	
	74279	Signetics		
	SN54279	**† TI**	**(1009)**	135
	SN74279	**TI**	**(1009)**	
TTL-LS	54LS279	† Fairchild		
	74LS279	Fairchild		
	HD74LS279	Hitachi		
	M74LS279	Mitsubishi		140
	SN54LS279	† Motorola		
	SN74LS279	Motorola		
	DM54LS279	† National		
	DM74LS279	National		
	DN74LS279	**Panasonic**	**(827)**	145
	54LS279	† SGS		
	74LS279	SGS		
	54LS279	† Signetics		
	SN54LS279	**† TI**	**(1009)**	
	SN74LS279	**TI**	**(1009)**	150
Hex Set-Reset				
TTL	ZN54118	† Ferranti		
	ZN54119	† Ferranti		
	ZN74118	Ferranti		
	ZN74119	Ferranti		
Octal Transparent, Inverting				
TTL-ALS	**SN54ALS880**	**† Motorola**	**(823)**	155
	SN74ALS880	**Motorola**	**(823)**	
	DM54ALS880	† National		
	DM74ALS880	National		
	SN54ALS880	**† TI**	**(1109)**	
	SN74ALS880	**TI**	**(1109)**	160
TTL-AS	**SN54AS880**	**† TI**	**(1109)**	
	SN74AS880	**TI**	**(1109)**	
Octal 2-Input Multiplexed, Three-State Outputs				
TTL-F	54F604	† Fairchild		
	54F605	† Fairchild		
	54F606	† Fairchild		165
	54F607	† Fairchild		
	74F604	Fairchild		
	74F605	Fairchild		
	74F606	Fairchild		
	74F607	Fairchild		170
	54F604	**† Signetics**	**(887)**	
	54F605	**† Signetics**	**(887)**	
	74F604	**Signetics**	**(880,887)**	
	74F605	**Signetics**	**(880,887)**	
TTL-LS	SN54LS604	† Motorola		175
	SN54LS605	† Motorola		
	SN54LS606	† Motorola		
	SN54LS607	† Motorola		
	SN74LS604	Motorola		
	SN74LS605	Motorola		180
	SN74LS606	Motorola		
			(Continued)	

† Military Temperature Range (−55° to 125°C)

* Typical Value

Bold face indicates additional data is provided on the page noted.

DIGITAL–TTL (Cont'd)

Latches (Cont'd)

Function	Device	Source	Line
Octal 2-Input Multiplexed, Three-State Outputs			
TTL-LS		(Cont'd)	
	SN74LS607	Motorola	
	SN54LS604	**† TI (1063)**	
	SN54LS605	**† TI (1063)**	
	SN54LS606	**† TI (1063)**	
	SN54LS607	**† TI (1063)**	5
	SN54LS608	**† TI (1064)**	
	SN74LS604	**TI (1063)**	
	SN74LS605	**TI (1063)**	
	SN74LS606	**TI (1063)**	
	SN74LS607	**TI (1063)**	10
	SN74LS608	**TI (1064)**	
6-Bit (independent 2 and 4-Bit)			
TTL-S	**N8T3404**	**Signetics (876)**	
8-Bit, Addressable, with Clear			
TTL	9334C	Fairchild	
	9334M	† Fairchild	
	DM54259	† National	15
	DM74259	National	
	DM8334	National	
	DM9334	† National	
	N9334	**Signetics (876)**	
	S9334	† Signetics	20
	SN54259	**† TI (1005)**	
	SN74259	**TI (1005)**	
TTL-ALS	**SN54ALS259**	**† TI (1005)**	
	SN74ALS259	**TI (1005)**	
TTL-F	**74F259**	**Signetics (879)**	25
TTL-LS	54LS259	† Fairchild	
	74LS259	Fairchild	
	HD74LS259	Hitachi	
	M74LS259	Mitsubishi	
	SN54LS259	† Motorola	30
	SN74LS259	Motorola	
	DM54LS259	† National	
	DM74LS259	National	
	54LS259	† SGS	
	74LS259	SGS	35
	54LS259	† Signetics	
	74LS259	Signetics	
	SN54LS259	**† TI (1005)**	
	SN74LS259	**TI (1005)**	
8-Bit, Transparent, D Type, Three-State			
TTL-ALS	**SN54ALS373**	**† Motorola (823)**	40
	SN54ALS573	**† Motorola (823)**	
	SN74ALS373	**Motorola (823)**	
	SN74ALS573	**Motorola (823)**	
	DM54ALS373	† National	
	DM54ALS573	† National	45
	DM74ALS373	National	
	DM74ALS573	National	
	SN54ALS373	**† TI (1025)**	
	SN54ALS573	**† TI (1054)**	
	SN74ALS373	**TI (1025)**	50
	SN74ALS573	**TI (1054)**	
TTL-AS	**SN54AS373**	**† TI (1025)**	
	SN54AS573	**† TI (1054)**	
	SN74AS373	**TI (1025)**	
	SN74AS573	**TI (1054)**	55
TTL-F	**54F373**	**† Fairchild (734)**	
	54F412	† Fairchild	
	54F432	† Fairchild	
	74F373	**Fairchild (734)**	
	74F412	Fairchild	60
	74F432	Fairchild	
	MC54F373	**† Motorola (822)**	
	MC74F373	**Motorola (822)**	
		(Continued)	

Function	Device	Source	Line
8-Bit, Transparent, D Type, Three-State			
TTL-F		(Cont'd)	
	54F373	**† Signetics (886)**	
	74F373	**Signetics (879,886)**	65
TTL-LS	54LS373	† Fairchild	
	74LS373	Fairchild	
	74LS573	Fairchild	
	HD74LS373	Hitachi	
	M74LS373	Mitsubishi	70
	SN54LS373	**† MMI (804)**	
	SN74LS373	**MMI (804)**	
	SN54LS373	† Motorola	
	SN74LS373	Motorola	
	DM54LS373	† National	75
	DM74LS373	National	
	DN74LS373	**Panasonic (826,834)**	
	T74LS373	SGS	
	54LS363	**† Signetics (530)**	
	54LS373	**† Signetics (530)**	80
	74LS363	Signetics	
	74LS373	Signetics	
	N8TS805	**Signetics (876)**	
	S8TS805	**† Signetics (876)**	
	S8TS806	**† Signetics (876)**	85
	SN54LS373	**† TI (1025)**	
	SN74LS373	**TI (1025)**	
TTL-S	**AM25S373**	**AMD (1427)**	
	SN54S373	**† MMI (804)**	
	SN74S373	**MMI (804)**	90
	SN74S531	**MMI (804)**	
	DM54S373	† National	
	DM74S373	National	
	54S373	Signetics	
	74S373	Signetics	95
	SN54S373	**† TI (1025)**	
	SN54S412	**† TI (1033)**	
	SN74S373	**TI (1025)**	
	SN74S412	**TI (1033)**	
8-Bit, Transparent, D-Type, Inverting			
TTL-AS	**SN54AS846**	**† TI (1100)**	100
	SN74AS846	**TI (1100)**	
8-Bit, Transparent, D-Type, Inverting Three-State			
TTL-ALS	**SN54ALS533**	**† Motorola (823)**	
	SN54ALS563	**† Motorola (823)**	
	SN54ALS580	**† Motorola (823)**	
	SN74ALS533	**Motorola (823)**	105
	SN74ALS563	**Motorola (823)**	
	SN74ALS580	**Motorola (823)**	
	DM54ALS580	† National	
	DM74ALS580	National	
	SN54ALS533	**† TI (1047)**	110
	SN54ALS563	**† TI (1052)**	
	SN54ALS580	**† TI (1056)**	
	SN74ALS533	**TI (1047)**	
	SN74ALS563	**TI (1052)**	
	SN74ALS580	**TI (1056)**	115
TTL-AS	**SN54AS533**	**† TI (1047)**	
	SN54AS580	**† TI (1056)**	
	SN74AS533	**TI (1047)**	
	SN74AS580	**TI (1056)**	
TTL-F	54F533	† Fairchild	120
	74F533	Fairchild	
	MC54F533	**† Motorola (822)**	
	MC74F533	**Motorola (822)**	
	54F533	† Signetics	
	74F533	**Signetics (879)**	125
TTL-LS	54LS533	† Fairchild	
	74LS533	Fairchild	
	74LS563	Fairchild	
	74LS564	Fairchild	
		(Continued)	

Function	Device	Source	Line
8-Bit, Transparent, D-Type, Inverting Three-State			
TTL-LS		(Cont'd)	
	SN54LS533	**† MMI (804)**	130
	SN74LS533	**MMI (804)**	
	N8TS807	**Signetics (876)**	
TTL-S	**AM25S533**	**AMD (1427)**	
	AM25S534	**AMD (1427)**	
	SN54S533	**† MMI (804)**	135
	SN74S533	**MMI (804)**	
	SN74S535	**MMI (804)**	
8-Bit, Transparent, D-Type, Non-inverting			
TTL-AS	**SN54AS845**	**† TI (1099)**	
	SN74AS845	**TI (1099)**	
8-Bit, Transparent D-Type, Three-State (bus interface)			
TTL	**AM29845**	**AMD (2807)**	140
	AM29846	**AMD (2807)**	
8-Bit, Three-State (input and output through the same pins)			
TTL	DM7553	† National	
	DM8553	National	
9-Bit, Transparent, D-Type, Inverting			
TTL-AS	**SN54AS844**	**† TI (1099)**	
	SN74AS844	**TI (1099)**	145
9-Bit, Transparent, D-Type, Non-inverting			
TTL-AS	**SN54AS843**	**† TI (1099)**	
	SN74AS843	**TI (1099)**	
9-Bit, Transparent D-Type, Three-State (bus interface)			
TTL	**AM29843**	**AMD (2807)**	
	AM29844	**AMD (2807)**	
10-Bit, Transparent, D-Type, Inverting			
TTL-AS	**SN54AS842**	**† TI (1098)**	150
	SN74AS842	**TI (1098)**	
10-Bit, Transparent, D-Type, Non-inverting			
TTL-AS	**SN54AS841**	**† TI (1098)**	
	SN74AS841	**TI (1098)**	
10-Bit, Transparent D-Type, Three-State (bus interface)			
TTL	**AM29841**	**AMD (2807)**	
	AM29842	**AMD (2807)**	155

Memories

For additional information on these and larger TTL compatible memories, see the Master Selection Guide-Memory section

Function	Device	Source	Line
Dual Rank 8-Bit Shift Register (8-Bit I/O buffer, "D" register, and serial "B" register)			
TTL-LS	DM74LS62	† National	
	DM76LS52	† National	
	DM86LS52	National	
	DM86LS62	National	160
Dual 16-Word x 4-Bit Register File			
TTL-AS	**SN54AS870**	**† TI (1104)**	
	SN54AS871	**† TI (1105)**	
	SN74AS870	**TI (1104)**	
	SN74AS871	**TI (1105)**	
Octal Storage Register (two stage, 4-Bit wide shift register)			
TTL-LS	**SN54LS396**	**† TI (1032)**	165
	SN74LS396	**TI (1032)**	
8-Bit Multiport Register (RAM with simultaneous read/write)			
TTL	9338C	Fairchild	
	9338M	† Fairchild	
16-Bit Active Element Memory			
TTL	93407C	Fairchild	
	93407M	† Fairchild	170
	MC4004	Motorola	
	MC4005	Motorola	
	MC4304	† Motorola	
	MC4305	† Motorola	
		(Continued)	

† Military Temperature Range (−55° to 125°C)

* Typical Value

Bold face indicates additional data is provided on the page noted.

© IC MASTER 1984

DIGITAL–TTL (Cont'd)

Memories (Cont'd)

Function	Device	Source	Line
16-Bit Active Element Memory			
TTL			(Cont'd)
	SN5481A	**† TI**	**(948)**
	SN7481A	**TI**	**(948)**
16-Bit Active Element Memory, Gated Write			
TTL	**SN5485A**	**† TI**	**(950)**
	SN7484A	**TI**	**(949)**
16-Bit (4x4) Register File, Simultaneous Read/Write, Open Collector			
TTL	54170	† Fairchild	5
	74170	Fairchild	
	ZN54170	† Ferranti	
	ZN74170	Ferranti	
	DM74170	National	
	54170	**† Signetics**	**(861)** 10
	74170	**Signetics**	**(861)**
	SN54170	**† TI**	**(981)**
	SN74170	**TI**	**(981)**
TTL-LS	54LS170	† Fairchild	
	74LS170	Fairchild	15
	HD74LS170	Hitachi	
	SN54SL170	† Motorola	
	SN74LS170	Motorola	
	DM54LS170	† National	
	DM74LS170	National	20
	DN74LS170	**Panasonic**	**(827)**
	54LS170	† SGS	
	74LS170	SGS	
	74LS170	Signetics	
	SN54LS170	**† TI**	**(981)** 25
	SN74LS170	**TI**	**(981)**
16-Bit (4x4) Register File, Simultaneous Read/Write, Three-State			
TTL-LS	54LS670	† Fairchild	
	74LS670	Fairchild	
	HD74LS670	Hitachi	
	M74LS670	Mitsubishi	30
	SN54LS670	† Motorola	
	SN74LS670	Motorola	
	DM54LS670	† National	
	DM74LS670	National	
	54LS670	† SGS	35
	74LS670	SGS	
	54LS670	**† Signetics**	**(530)**
	74LS670	Signetics	
	SN54LS670	**† TI**	**(1080)**
	SN74LS670	**TI**	**(1080)** 40
16-Bit (8x2) Multiport Register File, Simultaneous Read/Write, Three-State			
TTL	**SN74172**	**TI**	**(982)**
TTL-S	54S172	† Signetics	
	74S172	Signetics	
32-Bit (4x8) Register File, Open Collector			
TTL-F	54F571	† Fairchild	
	74F571	Fairchild	45
32-Bit (4x8) Register File, Three-State			
TTL-F	54F570	† Fairchild	
	74F570	Fairchild	
64-Bit (16x4) RAM, Open Collector			
	54F289	† Fairchild	
	54F319	† Fairchild	
	74F289	Fairchild	50
	74F319	Fairchild	
	MC54F289	**† Motorola**	**(822)**
	MC74F289	**Motorola**	**(822)**
TTL	AM29704C	AMD	
	AM29704M	† AMD	55
	ZN5489	† Ferranti	
	ZN7489	Ferranti	
	DM7489B	National	
			(Continued)

Function	Device	Source	Line
64-Bit (16x4) RAM, Open Collector			
TTL			(Cont'd)
	DM7589	National	
	DM8589	National	60
	SN7489	**TI**	**(951)**
TTL-S	DM74S289	National	
	IDM29704C	National	
	IDM29704M	† National	
64-Bit (16x4) RAM, Three-State			
TTL	**AM29705C**	**AMD**	**(1425)** 65
	AM29705M	**† AMD**	**(1425)**
	DM7599	National	
	DM8599	National	
TTL-F	54F189	† Fairchild	
	54F219	† Fairchild	70
	74F189	Fairchild	
	74F219	Fairchild	
	MC54F189	**† Motorola**	**(822)**
	MC74F189	**Motorola**	**(822)**
TTL-S	DM74S189	National	75
	IDM29705AC	National	
	IDM29705AM	† National	
	IDM29705C	National	
	IDM29705M	† National	
64-Bit (16x4) Register File with Latch, Three-State			
TTL-S	DM85S68	National	80
64-Bit (16x4) Simultaneous Read/Write RAM with Output Register			
TTL	9410C	Fairchild	
	9410M	† Fairchild	
64-Bit (32x2) Simultaneous Read/Write RAM			
TTL-S	N82S21	Signetics	
80-Bit (16x5) First-In/First-Out Memory, Asynchronous, Three-State			
TTL-S	**SN74S225**	**TI**	**(996)**
144-Bit (16x9) RAM, Open Collector			
	54F311	† Fairchild	85
	54F312	† Fairchild	
	74F311	Fairchild	
	74F312	Fairchild	
144-Bit (16x9) RAM, Three-State			
	54F211	† Fairchild	
	54F212	† Fairchild	90
	74F211	Fairchild	
	74F212	Fairchild	
192-Bit (16x12) RAM, Open Collector			
	54F313	† Fairchild	
TTL-F	74F313	Fairchild	
192-Bit (16x12) RAM, Three-State			
	54F213	† Fairchild	95
	74F213	Fairchild	
256-Bit (256x1) RAM, Open Collector			
TTL-LS	54LS301	† Signetics	
256-Bit (256x1) RAM, Three-State			
TTL-S	DM74S200	National	
1024x10 ROM, Sine (0° to 90°) Look-Up Table			
TTL-S	**5086**	**† MMI**	**(819)**
	5087	**† MMI**	**(819)** 100
	6086	**MMI**	**(819)**
	6087	**MMI**	**(819)**

Multiplexers (Digital)

Function	Device	Source	Line
Synchronous Address			
TTL-LS	MC6883	Motorola	
	SN74LS783	Motorola	
Dual 3-Input, Inverting, Three-State			
TTL-ALS	**SN54ALS353**	**† Motorola**	**(823)** 105
	SN74ALS353	**Motorola**	**(823)**
	SN54ALS353	**† TI**	**(1021)**
	SN54AS353	**† TI**	**(1021)**
			(Continued)

Function	Device	Source	Line
Dual 3-Input, Inverting, Three-State			
TTL-ALS			(Cont'd)
	SN74ALS353	**TI**	**(1021)**
	SN74AS353	**TI**	**(1021)** 110
TTL-F	54F353	† Fairchild	
	74F353	Fairchild	
	MC54F353	**† Motorola**	**(822)**
	MC74F353	**Motorola**	**(822)**
	74F353	**Signetics**	**(879)** 115
TTL-LS	54LS353	† Fairchild	
	74LS353	Fairchild	
	M74LS353	Mitsubishi	
	SN54LS353	† Motorola	
	SN74LS353	Motorola	120
	DM54LS353	† National	
	DM74LS353	National	
	T54LS353	† SGS	
	T74LS353	SGS	
	54LS353	† Signetics	125
	74LS353	Signetics	
	SN54LS353	**† TI**	**(1021)**
	SN74LS353	**TI**	**(1021,1022)**
Dual 4-Input, Complementary Output			
TTL	9309C	Fairchild	
	9309M	† Fairchild	130
	MC8309	Motorola	
	MC9309	† Motorola	
	DM8309	National	
	DM9309	National	
	N9309	**Signetics**	**(876)** 135
	S9309	**† Signetics**	**(528)**
	SN29309	TI	
	SN39309	† TI	
Dual 4-Input, Inverting			
TTL-ALS	**SN54ALS352**	**† Motorola**	**(823)**
	SN74ALS352	**Motorola**	**(823)** 140
	SN54ALS352	**† TI**	**(1020)**
	SN74ALS352	**TI**	**(1020)**
TTL-AS	**SN54AS352**	**† TI**	**(1020)**
	SN74AS352	**TI**	**(1020)**
TTL-F	54F352	† Fairchild	145
	74F352	Fairchild	
	MC54F352	**† Motorola**	**(822)**
	MC74F352	**Motorola**	**(822)**
	74F352	**Signetics**	**(879)**
TTL-LS	54LS352	† Fairchild	150
	74LS352	Fairchild	
	M74LS352	Mitsubishi	
	SN54LS352	† Motorola	
	SN74LS352	Motorola	
	DM54LS352	† National	155
	DM74LS352	National	
	T54LS352	† SGS	
	T74LS352	SGS	
	54LS352	† Signetics	
	74LS352	Signetics	160
	SN54LS352	**† TI**	**(1020)**
	SN74LS352	**TI**	**(1020)**
Dual 4-Input (three-state 54/75153)			
TTL	DM7214	† National	
	DM8214	National	
Dual 4-Input, Three-State			
TTL-ALS	**SN54ALS253**	**† Motorola**	**(823)** 165
	SN74ALS253	**† Motorola**	**(823)**
	SN54ALS253	**† TI**	**(1003)**
	SN74ALS253	**TI**	**(1003)**
TTL-AS	**SN54AS253**	**† TI**	**(1003)**
	SN74AS253	**TI**	**(1003)** 170
TTL-F	54F253	† Fairchild	
	74F253	Fairchild	
	MC54F253	**† Motorola**	**(822)**
			(Continued)

† Military Temperature Range (−55° to 125°C)

* Typical Value

Bold face indicates additional data is provided on the page noted.

DIGITAL–TTL (Cont'd)

Multiplexers (Digital) (Cont'd)

Function	Device	Source	Line
Dual 4-Input, Three-State			
TTL-F		(Cont'd)	
	MC74F253	**Motorola** (822)	
	74F253	**Signetics** (879)	
TTL-LS	54LS253	† Fairchild	
	74LS253	Fairchild	
	HD74LS253	Hitachi	5
	M74LS253	Mitsubishi	
	SN54LS253	† Motorola	
	SN74LS253	Motorola	
	DM54LS253	† National	
	DM74LS253	National	10
	DN74LS253	**Panasonic** (827)	
	54LS253	† SGS	
	74LS253	SGS	
	54LS253	† Signetics	
	74LS253	Signetics	15
	SN54LS253	**† TI** (1003)	
	SN74LS253	**TI** (1003)	
TTL-S	54S253	† Fairchild	
	74S253	Fairchild	
	DM54S253	† National	20
	DM74S253	National	
	54S253	† Signetics	
	74S253	Signetics	
	SN54S253	**† TI** (1003)	
	SN74S253	**TI** (1003)	25
Dual 4-Input			
TTL	54153	† Fairchild	
	74153	Fairchild	
	ZN54153	† Ferranti	
	ZN74153	Ferranti	
	HD74153	Hitachi	30
	MC4000	Motorola	
	MC4300	† Motorola	
	MC74153	Motorola	
	DM54153	† National	
	DM74153	National	35
	54153	**† Signetics** (528,861)	
	74153	**Signetics** (861)	
	SN54153	**† TI** (972)	
	SN74153	**TI** (972)	
TTL-ALS	**SN54ALS153**	**† Motorola** (823)	40
	SN74ALS153	**Motorola** (823)	
	SN54ALS153	**† TI** (972)	
	SN74ALS153	**TI** (972)	
TTL-AS	**SN54AS153**	**† TI** (972)	
	SN74AS153	TI	45
TTL-F	54F153	† Fairchild	
	74F153	Fairchild	
	MC54F153	**† Motorola** (822)	
	MC74F153	**Motorola** (822)	
	74F153	**Signetics** (879)	50
TTL-L	**SN54L153**	**† TI** (972)	
TTL-LS	54LS153	† Fairchild	
	74LS153	Fairchild	
	HD74LS153	Hitachi	
	M74LS153	Mitsubishi	55
	SN54LS153	† Motorola	
	SN74LS153	Motorola	
	DM54LS153	† National	
	DM74LS153	National	
	DN74LS153	**Panasonic** (827)	60
	54LS153	† SGS	
	74LS153	SGS	
	54LS153	**† Signetics** (529)	
	74LS153	Signetics	
	SN54LS153	**† TI** (972)	65
	SN74LS153	**TI** (972)	
		(Continued)	

Function	Device	Source	Line
Dual 4-Input		(Cont'd)	
TTL-S	54S153	† Fairchild	
	74S153	Fairchild	
	DM54S153	† National	
	DM74S153	National	70
	54S153	**† Signetics** (531)	
	74S153	Signetics	
	SN54S153	**† TI** (972)	
	SN74S153	**TI** (972)	
Dual 8-Input (two 8-to-1 sections)			
TTL	SN54LS451	† MMI	75
	SN74LS451	MMI	
	SN74351	**TI** (1020)	
Quad 2-Input Digital (suitable for driving adders, registers)			
TTL	MC7266	Motorola	
	MC8266	† Motorola	
	RC8266	Raytheon	80
	RM8266	† Raytheon	
	N8266	**Signetics** (876)	
	S8266	† Signetics	
Quad 2-Input, Inverting, Open Collector			
TTL	RC8234	Raytheon	
	RM8234	† Raytheon	85
	N8234	Signetics	
	S8234	† Signetics	
Quad 2-Input, Inverting Three-State			
TTL-ALS	**SN54ALS258**	**† Motorola** (823)	
	SN74ALS258	**Motorola** (823)	
	SN54ALS258	**† TI** (1005)	90
	SN74ALS258	**TI** (1005)	
TTL-AS	**SN54AS258**	**† TI** (1005)	
	SN74AS258	**TI** (1005)	
TTL-F	54F258	† Fairchild	
	74F258	Fairchild	95
	MC54F258	**† Motorola** (822)	
	MC74F258	**Motorola** (822)	
	54F258	† Signetics	
	74F258	**Signetics** (879)	
TTL-LS	54LS258A	† Fairchild	100
	74LS258	Fairchild	
	HD74LS258	Hitachi	
	M74LS258	Mitsubishi	
	SN54LS258A	† Motorola	
	SN74LS258A	Motorola	105
	DM54LS258B	† National	
	DM74LS258B	National	
	DN74LS258A	**Panasonic** (827)	
	54LS258	† SGS	
	74LS258	SGS	110
	54LS256	† Signetics	
	54LS258A	**† Signetics** (530)	
	74LS258A	Signetics	
	SN54LS258A	**† TI** (1005)	
	SN74LS258A	**TI** (1005)	115
TTL-S	54S258	† Fairchild	
	74S258	Fairchild	
	HD74S258	Hitachi	
	DM54S258	† National	
	DM74S258	National	120
	54S258	† Signetics	
	74S258	Signetics	
	SN54S258	**† TI** (1005)	
	SN74S258	**TI** (1005)	
Quad 2-Input, Inverting			
TTL	**54158**	**† Signetics** (861)	125
	74158	**Signetics** (861)	
TTL-ALS	**SN54ALS158**	**† Motorola** (823)	
	SN74ALS158	**Motorola** (823)	
	SN54ALS158	**† TI** (975)	
	SN74ALS158	**TI** (975)	130
		(Continued)	

Function	Device	Source	Line
Quad 2-Input, Inverting		(Cont'd)	
TTL-AS	**SN54AS158**	**† TI** (975)	
	SN74AS158	**TI** (975)	
TTL-F	54F158	† Fairchild	
	74F158	Fairchild	
	MC54F158	**† Motorola** (822)	135
	MC74F158	**Motorola** (822)	
	54F158	† Signetics	
	74F158	**Signetics** (879)	
TTL-LS	54LS158	† Fairchild	
	74LS158	Fairchild	140
	HD74LS158	Hitachi	
	M74LS158	Mitsubishi	
	SN54LS158	† Motorola	
	SN74LS158	Motorola	
	DM54LS158	† National	145
	DM74LS158	National	
	DN74LS158	**Panasonic** (827)	
	54LS158	† SGS	
	74LS158	SGS	
	54LS158	† Signetics	150
	74LS158	Signetics	
	SN54LS158	**† TI** (975)	
	SN74LS158	**TI** (975)	
TTL-S	54S158	† Fairchild	
	74S158	Fairchild	155
	HD74S158	Hitachi	
	DM54S158	† National	
	DM74S158	National	
	54S158	**† Signetics** (531)	
	74S158	Signetics	160
	SN54S158	**† TI** (975)	
	SN74S158	**TI** (975)	
Quad 2-Input, Non-Inverting, Three-State			
TTL-ALS	**SN54ALS257**	**† Motorola** (823)	
	SN74ALS257	**Motorola** (823)	
	SN54ALS257	**† TI** (1004)	165
	SN74ALS257	**TI** (1004)	
TTL-F	54F257	† Fairchild	
	74F257	Fairchild	
	MC54F257	**† Motorola** (822)	
	MC74F257	**Motorola** (822)	170
	54F257	† Signetics	
	74F257	**Signetics** (879)	
TTL-LS	54LS257A	† Fairchild	
	74LS257	Fairchild	
	HD74LS257	Hitachi	175
	M74LS257	Mitsubishi	
	SN54LS257A	† Motorola	
	SN74LS257A	Motorola	
	DM54LS257B	† National	
	DM74LS257B	National	180
	DN74LS257A	**Panasonic** (827)	
	54LS257	† SGS	
	74LS257	SGS	
	54LS257A	**† Signetics** (530)	
	74LS257A	Signetics	185
	SN54LS257A	**† TI** (1004)	
	SN74LS257A	**TI** (1004)	
TTL-S	74S257	Fairchild	
	HD74S257	Hitachi	
	DM54S257	† National	190
	DM74S257	National	
	54S257	† Signetics	
	74S257	Signetics	
	SN54S257	**† TI** (1004)	
	SN74S257	**TI** (1004)	195
Quad 2-Input, Non-Inverting			
TTL	54157	† Fairchild	
	74157	Fairchild	
	9322C	Fairchild	
	9322M	† Fairchild	
		(Continued)	

† Military Temperature Range (−55° to 125°C)

* Typical Value

Bold face indicates additional data is provided on the page noted.

© IC MASTER 1984

DIGITAL–TTL (Cont'd)

Multiplexers (Digital) (Cont'd)

Function	Device	Source		Line
Quad 2-Input, Non-Inverting				
TTL			(Cont'd)	
	ZN54157	† Ferranti		
	HD74157	Hitachi		
	MC74157	Motorola		
	MC8322	Motorola		
	MC9322	† Motorola		5
	DM54157	† National		
	DM74157	National		
	DM8322	National		
	DM9322	† National		
	RC8233	Raytheon		10
	RM8233	† Raytheon		
	54157	**† Signetics**	**(528,861)**	
	74157	**Signetics**	**(861)**	
	N9322	**Signetics**	**(876)**	
	S8233	† Signetics		15
	SN54157	**† TI**	**(975)**	
	SN74157	**TI**	**(975)**	
TTL-ALS	**SN54ALS157**	**† Motorola**	**(823)**	
	SN74ALS157	**Motorola**	**(823)**	
	SN54ALS157	**† TI**	**(975)**	20
	SN74ALS157	**TI**	**(975)**	
TTL-AS	**SN54AS157**	**† TI**	**(975)**	
	SN74AS157	**TI**	**(975)**	
TTL-F	54F157	† Fairchild		
	74F157	Fairchild		25
	MC54F157	**† Motorola**	**(822)**	
	MC74F157	**Motorola**	**(822)**	
	54F157	† Signetics		
	74F157	**Signetics**	**(879)**	
TTL-L	**SN54L157**	**† TI**	**(975)**	30
TTL-LS	54LS157	† Fairchild		
	74LS157	Fairchild		
	HD74LS157	Hitachi		
	M74LS157	Mitsubishi		
	SN54LS157	† Motorola		35
	SN74LS157	Motorola		
	DM54LS157	† National		
	DM74LS157	National		
	DN74LS157	**Panasonic**	**(827)**	
	54LS157	† SGS		40
	74LS157	SGS		
	54LS157	**Signetics**	**(529)**	
	74LS157	Signetics		
	SN54LS157	**† TI**	**(975)**	
	SN74LS157	**TI**	**(975)**	45
TTL-S	54S157	† Fairchild		
	74S157	Fairchild		
	HD74S157	Hitachi		
	DM54S157	† National		
	DM74S157	National		50
	54S157	**† Signetics**	**(531)**	
	74S157	Signetics		
	SN54S157	**† TI**	**(975)**	
	SN74S157	**TI**	**(975)**	
Quad 2-Input, Open Collector (for adder, register input)				
TTL	MC7267	Motorola		55
	MC8267	† Motorola		
	RC8267	Raytheon		
	RM8267	† Raytheon		
Quad 2-Input, (three-state 54/74157)				
TTL	DM7123	National		
	DM8123	† National		60
Quad 2-Input with Output Register				
TTL	54298	† Fairchild		
	74298	Fairchild		
	MC74298	Motorola		
	54298	**† Signetics**	**(862)**	
			(Continued)	

Function	Device	Source		Line
Quad 2-Input with Output Register				
TTL			(Cont'd)	
	74298	**Signetics**	**(862)**	65
	SN54298	**† TI**	**(1015)**	
	SN74298	**TI**	**(1015)**	
TTL-AS	**SN54AS298**	**† TI**	**(1015)**	
	SN74AS298	**TI**	**(1015)**	
TTL-F	54F398	† Fairchild		70
	54F399	† Fairchild		
	74F398	Fairchild		
	74F399	Fairchild		
	74F298	**Signetics**	**(879)**	
	74F398	**Signetics**	**(879)**	75
	74F399	**Signetics**	**(879)**	
TTL-LS	**AM25LS09C**	**AMD**	**(1427)**	
	AM25LS09M	**† AMD**	**(1427)**	
	AM25LS399C	AMD		
	AM25LS399M	† AMD		80
	SN54LS399	† AMD		
	SN74LS399	AMD		
	54LS298	† Fairchild		
	54LS398	† Fairchild		
	54LS399	† Fairchild		85
	74LS298	Fairchild		
	74LS398	Fairchild		
	74LS399	Fairchild		
	HD74LS298	Hitachi		
	M74LS298	Mitsubishi		90
	SN54LS298	† Motorola		
	SN54LS398	† Motorola		
	SN54LS399	† Motorola		
	SN74LS298	Motorola		
	SN74LS398	Motorola		95
	SN74LS399	Motorola		
	DM54LS298	† National		
	DM74LS298	National		
	54LS298	† SGS		
	74LS298	SGS		100
	54LS298	**† Signetics**	**(530)**	
	74LS298	Signetics		
	SN54LS298	**† TI**	**(1015)**	
	SN54LS398	**† TI**	**(1032)**	
	SN54LS399	**† TI**	**(1032)**	105
	SN74LS298	**TI**	**(1015)**	
	SN74LS398	**TI**	**(1032)**	
	SN74LS399	**TI**	**(1032)**	
TTL-S	**AM25S09C**	**AMD**	**(1427)**	
	AM25S09M	**† AMD**	**(1427)**	110
	SN54S399	† AMD		
	SN74S399	AMD		
Quad 3-Input, Conditional Complementing				
TTL	RC8263	Raytheon		
	RM8263	† Raytheon		
Quad 3-Input, Open Collector, Conditional Complementing, Output Enable				
TTL	RC8264	Raytheon		115
	RM8264	† Raytheon		
Quad 4-Input				
TTL-LS	SN54LS453	† MMI		
	SN74LS453	MMI		
4-Bit Shifter (shifts data 0, 1, 2, or 3 places as determined by 2-bit selector code)				
TTL-F	54F350	† Fairchild		
	74F350	Fairchild		120
4-Bit Shifter, Three-State				
TTL-F	**MC54F350**	**† Motorola**	**(822)**	
	MC74F350	**Motorola**	**(822)**	
4-Input, Three State				
TTL-F	54F350	† Fairchild		
	74F350	Fairchild		

Function	Device	Source		Line
8-Input, Complementary Output				
TTL	9312C	Fairchild		125
	9312M	† Fairchild		
	MC8312	Motorola		
	MC9312	† Motorola		
	DM8312	National		
	DM9312	† National		130
	RC8230	Raytheon		
	RC8232	Raytheon		
	RM8230	† Raytheon		
	RM8232	† Raytheon		
	N9312	**Signetics**	**(876)**	135
	SN29312	TI		
	SN39312	† TI		
TTL-S	S82S30	† Signetics		
	S82S31	† Signetics		
	S82S32	† Signetics		140
8-Input, Complementary Output, Open Collector				
TTL	9313C	Fairchild		
	9313M	† Fairchild		
	RC8231	Raytheon		
	RM8231	† Raytheon		
8-Input, Complementary Output, Strobe				
TTL	54151	† Fairchild		145
	74151	Fairchild		
	ZN54151	† Ferranti		
	ZN74151	Ferranti		
	HD74151	Hitachi		
	MC74151	Motorola		150
	DM54151A	† National		
	DM74151A	National		
	54151	**† Signetics**	**(528,861)**	
	74151	**Signetics**	**(861)**	
	SN54151A	**† TI**	**(972)**	155
	SN74151A	**TI**	**(972)**	
TTL-ALS	**SN54ALS151**	**† Motorola**	**(823)**	
	SN74ALS151	**Motorola**	**(823)**	
	SN54ALS151	**† TI**	**(972)**	
	SN74ALS151	TI		160
TTL-AS	**SN54AS151**	**† TI**	**(972)**	
	SN74AS151	**TI**	**(972)**	
TTL-F	54F151	† Fairchild		
	74F151	Fairchild		
	MC54F151	**† Motorola**	**(822)**	165
	MC74F151	**Motorola**	**(822)**	
	74F151	**Signetics**	**(879)**	
TTL-LS	54LS151	† Fairchild		
	74LS151	Fairchild		
	HD74LS151A	Hitachi		170
	M74LS151	Mitsubishi		
	SN54LS151	† Motorola		
	SN74LS151	Motorola		
	DM54LS151	† National		
	DM74LS151	National		175
	DN74LS151	**Panasonic**	**(827)**	
	54LS151	† SGS		
	74LS151	SGS		
	54LS151	† Signetics		
	74LS151	Signetics		180
	SN54LS151	**† TI**	**(972)**	
	SN74LS151	**TI**	**(972)**	
TTL-S	54S151	† Fairchild		
	74S151	Fairchild		
	93S12C	Fairchild		185
	93S12M	† Fairchild		
	HD74S151	Hitachi		
	DM54S151	† National		
	DM74S151	National		
	54S151	**† Signetics**	**(531)**	190
	74S151	Signetics		
			(Continued)	

† Military Temperature Range (−55° to 125°C)

* Typical Value

Bold face indicates additional data is provided on the page noted.

DIGITAL–TTL (Cont'd)

Multiplexers (Digital) (Cont'd)

Function	Device	Source	Line
8-Input, Complementary Output, Strobe			
TTL-S			(Cont'd)
	SN54S151	**† TI**	**(972)**
	SN74S151	**TI**	**(972)**
8-Input, Complementary Output (three-state 54/74151)			
TTL	DM7121	† National	
	DM8121	National	
8-Input, Inverted Output			
TTL	54152	† Fairchild	5
	MC74152	Motorola	
	DM7210	† National	
	DM7211	† National	
	DM8210	National	
	DM8211	National	10
	SN54152A	**† TI**	**(972)**
	SN74152A	**TI**	**(972)**
TTL-LS	54LS152	† Fairchild	
	HD74LS152	Hitachi	
	SN54LS152	† Motorola	15
	~~T74LS152~~	~~SGS~~	
	SN54LS152A	**† TI**	**(972)**
	SN74LS152A	**† TI**	**(972)**
8-Input, Inverting/Non Inverting, Control Storage			
TTL-LS	**AM25LS2535C**	**AMD**	**(1427)**
	AM25LS2535M	**† AMD**	**(1427)** 20
	AM2922C	**AMD**	**(1415)**
	AM2922M	**† AMD**	**(1415)**
8-Input Multiplexer/Data Selector/Register, Complementary Output, Open Collector			
TTL-LS	**SN54LS355**	**† TI**	**(1022)**
	SN54LS357	**† TI**	**(1023)**
	SN74LS355	TI	
	SN74LS357	**TI**	**(1023)** 25
8-Input Multiplexer/Data Selector/Register, Complementary Output, Three-State			
TTL-LS	**SN54LS354**	**† TI**	**(1021)**
	SN54LS356	**† TI**	**(1022)**
	SN74LS354	**TI**	**(1021)**
	SN74LS356	**TI**	**(1022)** 30
8-Input, Strobe, Complementary Output, Three-State			
TTL	HD74251	Hitachi	
	DM54251	† National	
	DM74251	National	
	SN54251	**† TI**	**(1003)**
	SN74251	**TI**	**(1003)** 35
TTL-ALS	**SN54ALS251**	**† Motorola**	**(823)**
	SN74ALS251	**Motorola**	**(823)**
	SN54ALS251	**† TI**	**(1003)**
	SN74ALS251	**TI**	**(1003)**
TTL-AS	**SN54AS251**	**† TI**	**(1003)** 40
	SN74AS251	**TI**	**(1003)**
TTL-F	54F251	† Fairchild	
	74F251	Fairchild	
	MC54F251	**† Motorola**	**(822)**
	MC74F251	**Motorola**	**(822)** 45
	74F251	**Signetics**	**(879)**
TTL-LS	54LS251	† Fairchild	
	74LS251	Fairchild	
	HD74LS251	Hitachi	
	M74LS251	Mitsubishi	50
	SN54LS251	† Motorola	
	SN74LS251	Motorola	
	DM54LS251	† National	
	DM74LS251	National	
	DN74LS251	**Panasonic**	**(827)** 55
	54LS251	† SGS	
	74LS251	SGS	
	~~54LS251A~~	~~† Signetics~~	
	74LS251A	Signetics	
			(Continued)

Function	Device	Source	Line
8-Input, Strobe, Complementary Output, Three-State			
TTL-LS			(Cont'd)
	SN54LS251	**† TI**	**(1003)** 60
	SN74LS251	**TI**	**(1003)**
TTL-S	HD74S251	Hitachi	
	DM54S251	† National	
	DM74S251	National	
	54LS251	† Signetics	65
	54S251	† Signetics	
	74S251	Signetics	
	SN54S251	**† TI**	**(1003)**
	SN74S251	**TI**	**(1003)**
16-Input, Complementary Output, Three-State			
TTL-AS	**SN54AS850**	**† TI**	**(1100)** 70
	SN54AS851	**† TI**	**(1100)**
	SN74AS850	**TI**	**(1100)**
	SN74AS851	**TI**	**(1100)**
16-Input, Inverted Output, Strobe			
TTL	54150	† Fairchild	
	74150	Fairchild	75
	ZN54150	† Ferranti	
	ZN74150	Ferranti	
	HD74150	Hitachi	
	MC74150	Motorola	
	DM54150	† National	80
	DM74150	National	
	54150	**† Signetics**	**(861)**
	74150	**Signetics**	**(861)**
	SN54150	**† TI**	**(971)**
	SN74150	**TI**	**(971)** 85
TTL-AS	**SN54AS150**	**† TI**	**(971)**
	SN74AS150	**TI**	**(971)**
TTL-LS	SN54LS450	† MMI	
	SN74LS450	MMI	
16-Input (three-state 54/74150)			
TTL	DM7219	† National	90
	DM8219	National	

Multivibrators

Function	Device	Source	Line
Bidirectional Monostable (low level input)			
TTL	RC8T20	Raytheon	
	RM8T20	† Raytheon	
	N8T20	**Signetics**	**(876)**
Monostable, Schmitt Trigger Input			
TTL	54121	† Fairchild	95
	74121	Fairchild	
	ZN54121	† Ferranti	
	ZN74121	Ferranti	
	HD74121	Hitachi	
	MC74121	Motorola	100
	DM54121	† National	
	DM74121	National	
	54121	**† Signetics**	**(528,860)**
	74121	**Signetics**	**(860)**
	SN54121	**† TI**	**(961)** 105
	SN74121	**TI**	**(961)**
Retriggerable Monostable			
TTL	9601C	Fairchild	
	9601M	† Fairchild	
	MC8601	Motorola	
	MC9601	† Motorola	110
	DM8601	National	
	DM9601	† National	
	RF9601	Raytheon	
	~~N8T22~~	~~Signetics~~	~~(876)~~
	N9601	**Signetics**	**(876)** 115
	S9601	† Signetics	
	SN29601	TI	
TTL-LS	**SN54LS422**	**† TI**	**(1033)**
	SN74LS422	**TI**	**(1033)**

Function	Device	Source	Line
Retriggerable Monostable with Clear			
TTL	54122	† Fairchild	120
	74122	Fairchild	
	ZN54122	† Ferranti	
	ZN74122	Ferranti	
	MC74122	Motorola	
	SN54122	**† TI**	**(961)** 125
	SN74122	**TI**	**(961)**
TTL-L	**SN54L122**	**† TI**	**(961)**
TTL-LS	54LS122	† Fairchild	
	HD74LS122	Hitachi	
	SN54LS122	† Motorola	130
	SN74LS122	Motorola	
	DM54LS122	† National	
	DM74LS122	National	
	SN54LS122	**† TI**	**(961)**
	SN74LS122	**TI**	**(961)** 135
Retriggerable Monostable, with Reset			
TTL	9600C	Fairchild	
	~~9600M~~	~~† Fairchild~~	
Dual Monostable (dougle-edge)			
TTL	DM7853	† National	
	DM8853	National	
Dual Monostable, Schmitt-Trigger Input (dual 54/74121)			
TTL	HD74221	Hitachi	140
	54221	**† Signetics**	**(861)**
	74221	**Signetics**	**(861)**
	SN54221	**† TI**	**(994)**
	SN74221	**TI**	**(994)**
TTL-LS	54LS221	† Fairchild	145
	HD74LS221	Hitachi	
	SN54LS221	† Motorola	
	SN74LS221	Motorola	
	DM54LS221	† National	
	DM74LS221	National	150
	54LS221	† Signetics	
	SN54LS221	**TI**	**(994)**
	SN74LS221	**TI**	**(994)**
Dual Retriggerable Monostable (AND triggered)			
TTL-LS	**SN54LS423**	**† TI**	**(1033)**
	SN74LS423	**TI**	**(1033)** 155
Dual Retriggerable Monostable with Clear (AND triggered)			
TTL	AM26123C	AMD	
	AM26123M	† AMD	
	54123	† Fairchild	
	74123	Fairchild	
	ZN54123	† Ferranti	160
	ZN74123	Ferranti	
	HD74123	Hitachi	
	MC74123	Motorola	
	DM54123	† National	
	DM74123	National	165
	54123	**† Signetics**	**(528,861)**
	74123	**Signetics**	**(861)**
	SN54123	**† TI**	**(962)**
	SN74123	**TI**	**(962)**
TTL-L	SN54L123	† TI	170
TTL-LS	54LS123	† Fairchild	
	HD74LS123	Hitachi	
	SN54LS123	† Motorola	
	SN74LS123	Motorola	
	DM54LS123	† National	175
	DM74LS123	National	
	DM74LS123	**Panasonic**	**(826,834)**
	SN54LS123	**† TI**	**(962)**
	SN74LS123	**TI**	**(962)**

† Military Temperature Range (−55° to 125°C)

* Typical Value

Bold face indicates additional data is provided on the page noted.

© IC MASTER 1984

DIGITAL–TTL (Cont'd)

Multivibrators (Cont'd)

Function	Device	Source	Line
Dual Retriggerable Monostable with Reset (OR triggered)			
TTL	AM2602C	AMD	
	AM2602M	† AMD	
	9602C	Fairchild	
	9602M	† Fairchild	
	96L02C	Fairchild	5
	96L02M	† Fairchild	
	MC8602	Motorola	
	MC9602	† Motorola	
	DM8602	National	
	DM9602	† National	10
	N9602	**Signetics**	**(876)**
	S9602	† Signetics	
TTL-LS	96LS02C	Fairchild	
	96LS02M	† Fairchild	
TTL-S	AM26S02C	AMD	15
	AM26S02M	† AMD	
	96S02C	Fairchild	
	96S02M	† Fairchild	
Dual Voltage-Controlled			
TTL	MC4024	Motorola	
	MC4324	† Motorola	20
Triple Monostable			
TTL	DN850	Panasonic	

Shift Registers

Function	Device	Source	Line
Parallel-In, Parallel-Out, Registered Outputs			
TTL-ALS	**SN54ALS671**	**† Motorola**	**(823)**
	SN54ALS672	**† Motorola**	**(823)**
	SN74ALS671	**Motorola**	**(823)**
	SN74ALS672	**Motorola**	**(823)** 25
TTL-LS	**SN54LS671**	**† TI**	**(1081)**
	SN54LS672	**† TI**	**(1081)**
	SN74LS671	**TI**	**(1081)**
	SN74LS672	**TI**	**(1081)**
4-Bit Data Selector Storage Registers			
TTL-L	**SN54L98**	**† TI**	**(955)** 30
4-Bit Parallel In, Parallel Out, Right/Left, Three-State			
TTL-LS	74LS295	Fairchild	
	M74LS295B	Mitsubishi	
	SN54LS295A	† Motorola	
	SN74LS295A	Motorola	
	54LS295A	† SGS	35
	74LS295A	SGS	
	54LS295B	**† Signetics**	**(530)**
	74LS295B	Signetics	
	SN54LS295B	**† TI**	**(1014)**
	SN74LS295B	**TI**	**(1014)** 40
4-Bit Parallel Input, Parallel Output			
TTL	54195	† Fairchild	
	74195	Fairchild	
	9300C	Fairchild	
	9300M	† Fairchild	
	HD74195	Hitachi	45
	MC74195	Motorola	
	MC8300	Motorola	
	MC9300	† Motorola	
	DM54195	† National	
	DM74195	National	
	DM8300	National	50
	DM9300	† National	
	54195	**† Signetics**	**(861)**
	74195	**Signetics**	**(861)**
	N9300	Signetics	
	SN54195	**† TI**	**(991)** 55
	SN74195	**TI**	**(991)**
TTL-AS	**SN54AS195**	**† TI**	**(991)**
	SN74AS195	**TI**	**(991)**
			(Continued)

Function	Device	Source	Line
4-Bit Parallel Input, Parallel Output			(Cont'd)
TTL-F	**74F195**	**Signetics**	**(879)** 60
TTL-LS	54LS195	† Fairchild	
	74LS195	Fairchild	
	HD74LS195A	Hitachi	
	M74LS195A	Mitsubishi	
	SN54LS195A	† Motorola	65
	SN74LS195A	Motorola	
	DM54LS195A	† National	
	DM74LS195A	National	
	DN74LS195A	**Panasonic**	**(827)**
	74LS195A	Signetics	70
	SN54LS195A	**† TI**	**(991)**
	SN74LS195A	**TI**	**(991)**
TTL-S	93S00C	Fairchild	
	93S00M	† Fairchild	
	DM54S195	† National	75
	DM74S195	National	
	54S195	† Signetics	
	74S195	Signetics	
	SN54S195	**† TI**	**(991)**
	SN74S195	**TI**	**(991)** 80
4-Bit Parallel-In, Parallel Out, Right/Left			
TTL	5495	† Fairchild	
	7495	Fairchild	
	ZN5495A	† Ferranti	
	ZN7495A	Ferranti	
	HD7495A	Hitachi	85
	MC4012	Motorola	
	MC4312	† Motorola	
	MC7495A	Motorola	
	DM5495	† National	
	DM7495	National	90
	5495A	**† Signetics**	**(860)**
	7495A	**Signetics**	**(860)**
	SN5495A	**† TI**	**(954)**
	SN7495A	**TI**	**(954)**
TTL-AS	**SN54AS95**	**† TI**	**(954)** 95
	SN74AS95	**TI**	**(954)**
TTL-L	**SN54L95**	**† TI**	**(954)**
TTL-LS	54LS95B	† Fairchild	
	74LS95B	Fairchild	
	HD74LS95B	Hitachi	100
	M74LS95B	Mitsubishi	
	SN54LS95B	† Motorola	
	SN74LS95B	Motorola	
	DN74LS95B	**Panasonic**	**(827)**
	54LS95B	† SGS	105
	74LS95B	SGS	
	54LS95B	**† Signetics**	**(529)**
	74LS95B	Signetics	
	SN54LS95B	**† TI**	**(954)**
	SN74LS95B	**TI**	**(954)** 110
4-Bit Parallel-In, Parallel Out, (with load, shift, hold control)			
TTL	54178	† Fairchild	
	MC7270	Motorola	
	MC8270	† Motorola	
	RC8270	Raytheon	
	RM8270	† Raytheon	115
	SN54178	**† TI**	**(984)**
	SN74178	**TI**	**(984)**
4-Bit Parallel-In, Parallel Out, with Reset, Complementary Output for Last Bit			
TTL	54179	† Fairchild	
	74179	Fairchild	
	MC7271	Motorola	120
	MC8271	† Motorola	
	RC8271	Raytheon	
	RM8271	† Raytheon	
	N8271	**Signetics**	**(876)**
	S8271	† Signetics	125
			(Continued)

Function	Device	Source	Line
4-Bit Parallel-In, Parallel Out, with Reset, Complementary Output for Last Bit			
TTL			(Cont'd)
	SN54179	**† TI**	**(985)**
	SN74179	**TI**	**(985)**
TTL-S	**N82S71**	**Signetics**	**(876)**
4-Bit Parallel-In, Parallel-Out, Cascadable, Three-State			
TTL-AS	**SN54AS395**	**† TI**	**(1031)**
	SN74AS395	**TI**	**(1031)** 130
TTL-F	**74F395**	**Signetics**	**(879)**
TTL-LS	74LS395	Fairchild	
	M74LS395A	Mitsubishi	
	DN74LS395A	**Panasonic**	**(827)**
	T54LS395	† SGS	135
	T74LS395	SGS	
	54LS395A	**† Signetics**	**(530)**
	74LS395A	Signetics	
	SN54LS395A	**† TI**	**(1031)**
	SN74LS395A	**TI**	**(1031)** 140
4-Bit Parallel-In, Serial-Out			
TTL	5494	† Fairchild	
	7494	Fairchild	
	ZN7494A	Ferranti	
	MC7494	Motorola	
	7494	**Signetics**	**(860)** 145
	SN5494	**† TI**	**(953)**
	SN7494	**TI**	**(953)**
4-Bit Universal Bidirectional			
TTL	54194	† Fairchild	
	74194	Fairchild	
	ZN54194	† Ferranti	150
	ZN74194	Ferranti	
	HD74194	Hitachi	
	MC74194	Motorola	
	DM54194	† National	
	DM74194	National	155
	54194	**† Signetics**	**(861)**
	74194	**Signetics**	**(861)**
	SN54194	**† TI**	**(990)**
	SN74194	**TI**	**(990)**
TTL-ALS	**SN54ALS194**	**† TI**	**(990)** 160
	SN74ALS194	**TI**	**(990)**
TTL-AS	**SN54AS194**	**† TI**	**(990)**
	SN74AS194	**TI**	**(990)**
TTL-F	54F194	† Fairchild	
	74F194	Fairchild	165
	MC54F194	**† Motorola**	**(822)**
	MC74F194	**Motorola**	**(822)**
	74F194	**Signetics**	**(879)**
TTL-LS	54LS194A	† Fairchild	
	HD74LS194A	Hitachi	170
	M74LS194A	Mitsubishi	
	SN54LS194A	† Motorola	
	SN74LS194A	Motorola	
	DM54LS194A	† National	
	DM74LS194A	National	175
	DN74LS194A	**Panasonic**	**(827)**
	54LS194A	**† Signetics**	**(530)**
	74LS194A	Signetics	
	SN54LS194A	**† TI**	**(990)**
	SN74LS194A	**TI**	**(990)** 180
TTL-S	54S194	† Fairchild	
	74S194	Fairchild	
	DM54S194	† National	
	DM74S194	National	
	SN54S194	**† TI**	**(990)** 185
	SN74S194	**TI**	**(990)**
5-Bit Parallel-In, Parallel-Out			
TTL	5496	† Fairchild	
	7496	Fairchild	
	ZN5496	† Ferranti	
			(Continued)

† Military Temperature Range (−55° to 125°C)

* Typical Value

Bold face indicates additional data is provided on the page noted.

DIGITAL–TTL (Cont'd)

Shift Registers (Cont'd)

Function	Device	Source	Line
5-Bit Parallel-In, Parallel-Out			
TTL		(Cont'd)	
	ZN7496	Ferranti	
	HD7496	Hitachi	
	MC7496	Motorola	
	DM5496	† National	
	DM7496	National	5
	5496	**† Signetics (528,860)**	
	7496	**Signetics (860)**	
	SN5496	**† TI (954)**	
	SN7496	**TI (954)**	
TTL-L	**SN54L96**	**† TI (954)**	10
TTL-LS	M74LS96	Mitsubishi	
	54LS96	**† Signetics (529)**	
	74LS96	Signetics	
	SN54LS96	**† TI (954)**	
	SN74LS96	**TI (954)**	15
5-Bit Dual Parallel-In, Parallel-Out Buffer Register, (clocked flip-flops)			
TTL	RC8200	Raytheon	
	RM8200	† Raytheon	
5-Bit Dual Parallel-In, Parallel-Out Buffer Register, Inverting Output (clocked flip-flops)			
TTL	RC8201	Raytheon	
	RM8201	† Raytheon	
8-Bit Gated Serial-In, Parallel-Out			
TTL	54164	† Fairchild	20
	74164	Fairchild	
	ZN54164	† Ferranti	
	ZN74164	Ferranti	
	HD74164	Hitachi	
	DM54164	† National	25
	DM74164	National	
	DM7570	† National	
	DM8570	National	
	54164	**† Signetics (528,861)**	
	74164	**Signetics (861)**	30
	SN54164	**† TI (979)**	
	SN74164	**TI (979)**	
TTL-ALS	**SN54ALS164**	**† Motorola (823)**	
	SN74ALS164	**Motorola (823)**	
	SN54ALS164	**† TI (979)**	35
	SN74ALS164	**TI (979)**	
TTL-F	54F164	† Fairchild	
	74F164	Fairchild	
	74F164	**Signetics (879)**	
TTL-LS	54LS164	† Fairchild	40
	74LS164	Fairchild	
	HD74LS164	Hitachi	
	M74LS164	Mitsubishi	
	SN54LS164	† Motorola	
	SN74LS164	Motorola	45
	DM54LS164	† National	
	DM74LS164	National	
	DM74LS164	**Panasonic (827)**	
	54LS164	† SGS	
	74LS164	SGS	50
	54LS164	**† Signetics (529)**	
	54LS164B	**† Signetics (529)**	
	74LS164	Signetics	
	SN54LS164	**† TI (979)**	
	SN74LS164	**TI (979)**	55
8-Bit Parallel-In, Parallel-Out, Right/Left			
TTL	54198	† Fairchild	
	74198	Fairchild	
	HD74198	Hitachi	
	DM54198	† National	
	DM74198	National	60
		(Continued)	

Function	Device	Source	Line
8-Bit Parallel-In, Parallel-Out, Right/Left			
TTL		(Cont'd)	
	SN54198	**† TI (992)**	
	SN74198	**TI (992)**	
TTL-F	**74F198**	**Signetics (879)**	
8-Bit Parallel-In, Parallel-Out, Unidirectional			
TTL	54199	† Fairchild	
	74199	Fairchild	65
	HD74199	Hitachi	
	DM54199	† National	
	DM74199	National	
	54199	**† Signetics (861)**	
	74199	**Signetics (861)**	70
	SN54199	**† TI (993)**	
	SN74199	**TI (993)**	
8-Bit Parallel-In, Parallel-Out, Three-State, with Positive Edge-Triggered D-Type Flip Flops (bus interface)			
TTL	**AM29825**	**AMD (2802)**	
	AM29826	**AMD (2802)**	
8-Bit Parallel-In, Serial-Out, Complementary Output			
TTL	54165	† Fairchild	75
	74165	Fairchild	
	ZN54165	† Ferranti	
	ZN74165	Ferranti	
	MC74165	Motorola	
	DM54165	† National	80
	DM74165	National	
	54165	**† Signetics (861)**	
	74165	**Signetics (861)**	
	SN54165	**† TI (979)**	
	SN74165	**TI (979)**	85
TTL-ALS	**SN54ALS165**	**† TI (979)**	
	SN74ALS165	**TI (979)**	
TTL-LS	54LS165	† Fairchild	
	74LS165	Fairchild	
	M74LS165	Mitsubishi	90
	SN54LS165	† Motorola	
	SN74LS165	Motorola	
	SN54LS165	**† TI (979)**	
	SN74LS165	**TI (979)**	
8-Bit Parallel-In, Serial-Out with Clear			
TTL	54166	† Fairchild	95
	74166	Fairchild	
	ZN54166	Ferranti	
	ZN74166	Ferranti	
	HD74166	Hitachi	
	DM54166	† National	100
	DM74166	National	
	54166	**† Signetics (861)**	
	74166	**Signetics (861)**	
	SN54166	**† TI (979)**	
	SN74166	**TI (979)**	105
TTL-ALS	**SN54ALS166**	**† TI (979)**	
	SN74ALS166	**TI (979)**	
TTL-LS	M74LS166	Mitsubishi	
	SN54LS166	† Motorola	
	SN74LS166	Motorola	110
	DM54LS166	† National	
	DM74LS166	National	
	SN54LS166	**† TI (979)**	
	SN74LS166	**TI (979)**	
8-Bit Parallel-In, Serial-Out with Input Latches			
TTL-F	**74F597**	**Signetics (880)**	115
	74F598	**Signetics (880)**	
TTL-LS	**SN54LS597**	**† TI (1059)**	
	SN54LS598	**† TI (1059)**	
	SN74LS597	**TI (1059)**	
	SN74LS598	**TI (1059)**	120

Function	Device	Source	Line
8-Bit Serial/Parallel-In Register with Sign Extend (for use with 25LS14/74LS384 multiplier)			
TTL-F	54F322	† Fairchild	
	74F322	Fairchild	
	74F322	**Signetics (879)**	
TTL-LS	74LS322	Fairchild	
8-Bit Serial-In, Parallel-Out Register with Output Latches			
TTL-F	**74F595**	**Signetics (880)**	125
	74F596	**Signetics (880)**	
TTL-LS	**SN54LS594**	**† TI (1058)**	
	SN54LS595	**† TI (1058)**	
	SN54LS596	**† TI (1058)**	
	SN54LS599	**† TI (1060)**	130
	SN74LS594	**TI (1058)**	
	SN74LS595	**TI (1058)**	
	SN74LS596	**TI (1058)**	
	SN74LS599	**TI (1060)**	
8-Bit Serial-In, Serial-Out			
TTL	5491	† Fairchild	135
	7491	Fairchild	
	ZN5491A	† Ferranti	
	ZN7491	Ferranti	
	HD7491A	Hitachi	
	MC7491	Motorola	140
	DM5491A	† National	
	DM7491A	National	
	5491	**† Signetics (860)**	
	7491	**Signetics (860)**	
	SN5491A	**† TI (952)**	145
	SN7491A	**TI (952)**	
TTL-ALS	**SN54ALS91**	**† Motorola (823)**	
	SN74ALS91	**Motorola (823)**	
TTL-LS	HD74LS91	Hitachi	
	M74LS91	Mitsubishi	150
	SN54LS91	† Motorola	
	SN74LS91	Motorola	
	SN54LS91	**† TI (952)**	
	SN74LS91	**TI (952)**	
8-Bit Synchronous with Parallel Load and Hold			
TTL-LS	SN54LS498	† MMI	155
	SN74LS498	MMI	
8-Bit Synchronous with Parallel Load, Load Complement, Preset, Clear and Hold			
TTL-LS	SN54LS380	† MMI	
	SN74LS380	MMI	
8-Bit Universal Shift/Storage, Three-State			
TTL	DM7546	† National	
	DM8546	National	160
TTL-ALS	**SN54ALS299**	**† TI (1016)**	
	SN54ALS323	**† TI (1018)**	
	SN74ALS299	**TI (1016)**	
	SN74ALS323	**TI (1018)**	
TTL-AS	**SN54AS299**	**† TI (1016)**	165
	SN54AS323	**† TI (1018)**	
	SN74AS299	**TI (1016)**	
	SN74AS323	**TI (1018)**	
TTL-F	**54F299**	**† Fairchild (731)**	
	54F323	† Fairchild	170
	74F299	**Fairchild (731)**	
	74F323	Fairchild	
	MC54F299	**† Motorola (822)**	
	MC54F323	**† Motorola (822)**	
	MC74F299	**Motorola (822)**	175
	MC74F323	**Motorola (822)**	
	74F299	**Signetics (879)**	
	74F323	**Signetics (879)**	
TTL-LS	**AM25LS23C**	**AMD (1427)**	
	AM25LS23M	**† AMD (1427)**	180
	SN54LS323	† AMD	
	SN74LS323	AMD	
	54LS299	† Fairchild	
		(Continued)	

† Military Temperature Range (−55° to 125°C)

* Typical Value

Bold face indicates additional data is provided on the page noted.

© IC MASTER 1984

DIGITAL–TTL (Cont'd)

Shift Registers (Cont'd)

Function	Device	Source		Line
8-Bit Universal Shift/Storage, Three-State				
TTL-LS			(Cont'd)	
	54LS323	† Fairchild		
	74LS299	Fairchild		
	74LS323	Fairchild		
	HD74LS299	Hitachi		
	M74LS299	Mitsubishi		5
	M74LS323	Mitsubishi		
	SN54LS299	† Motorola		
	SN54LS323	† Motorola		
	SN74LS299	Motorola		
	SN74LS323	Motorola		10
	SN54LS299	**† TI**	**(1016)**	
	SN54LS323	**† TI**	**(1018)**	
	SN74LS299	**TI**	**(1016)**	
	SN74LS323	**TI**	**(1018)**	
TTL-S	DM54S299	† National		15
	DM74S299	National		
	SN54S299	**† TI**	**(1016)**	
	SN74S299	**TI**	**(1016)**	
8-Bit Dual Serial-In, Serial-Out				
TTL	9328C	Fairchild		
	9328M	† Fairchild		20
	MC8328	Motorola		
	MC9328	† Motorola		
	RC8277	Raytheon		
	RM8277	† Raytheon		
9-Bit Parallel-In, Parallel-Out, Three-State, with Positive Edge-Triggered D-Type Flip-Flops (bus interface)				
TTL	**AM29823**	**AMD**	**(2802)**	25
	AM29824	**AMD**	**(2802)**	
10-Bit Parallel-In, Parallel-Out Buffer Register, with Reset (clocked flip-flops)				
TTL	RC8202	Raytheon		
	RM8202	† Raytheon		
	S8202	† Signetics		
10-Bit Parallel-In, Parallel-Out Buffer Register, with Reset, Inverting Output (clocked flip-flops)				
TTL	RC8203	Raytheon		30
	RM8203	† Raytheon		
10-Bit Parallel-In, Parallel-Out, Three-State, with Positive Edge-Triggered D-Type Flip-Flops (bus interface)				
TTL	**AM29821**	**AMD**	**(2802)**	
	AM29822	**AMD**	**(2802)**	
10-Bit Parallel-In, Serial Out				
TTL	RC8274	Raytheon		
	RM8274	† Raytheon		35
	N8274	**Signetics**	**(876)**	
10-Bit Serial-In, Parallel-Out				
TTL	RC8273	Raytheon		
	RM8273	† Raytheon		
	N8273	**Signetics**	**(876)**	
	S8273	† Signetics		40
16-Bit Parallel-In, Serial-Out				
TTL-F	54F674	† Fairchild		
	74F674	Fairchild		
	74F674	**Signetics**	**(880)**	
TTL-LS	SN54LS674	† Motorola		
	SN74LS674	Motorola		45
	SN54LS674	**† TI**	**(1082)**	
	SN74LS674	**TI**	**(1082)**	
16-Bit Serial/Parallel-In, Serial Out				
	54F676	**† Fairchild**	**(763)**	
	74F676	**Fairchild**	**(763)**	
TTL-F	**74F676**	**Signetics**	**(880)**	50
16-Bit Serial-In, Serial/Parallel Out				
	54F675	† Fairchild		
	74F675	Fairchild		
	74F675	**Signetics**	**(880)**	

Function	Device	Source		Line
16-Bit Serial-In, Serial-Out Register plus Stored Parallel Output				
TTL-F	54F673	† Fairchild		
	74F673	Fairchild		55
	74F673	**Signetics**	**(880)**	
TTL-LS	SN54LS673	† Motorola		
	SN74LS673	Motorola		
	SN54LS673	**† TI**	**(1082)**	
	SN74LS673	**TI**	**(1082)**	60

Transceivers, Bus

Function	Device	Source		Line
Quad Bus Transceiver, Open Collector				
TTL-AS	**SN54AS758**	**† TI**	**(1092)**	
	SN54AS759	**† TI**	**(1092)**	
	SN74AS758	**TI**	**(1092)**	
	SN74AS759	**TI**	**(1092)**	
Quad Bus Transceiver				
TTL-ALS	**SN54ALS242**	**† Motorola**	**(823)**	65
	SN54ALS243	**† Motorola**	**(823)**	
	SN74ALS242	**Motorola**	**(823)**	
	SN74ALS243	**Motorola**	**(823)**	
	DM54ALS242	† National		
	DM54ALS243	† National		70
	DM74ALS242	National		
	DM74ALS243	National		
	SN54ALS1242	**† TI**	**(1119)**	
	SN54ALS1243	**† TI**	**(1120)**	
	SN54ALS242	**† TI**	**(999)**	75
	SN54ALS243	**† TI**	**(1000)**	
	SN74ALS1242	**TI**	**(1119)**	
	SN74ALS1243	**TI**	**(1120)**	
	SN74ALS242	**TI**	**(999)**	
	SN74ALS243	**TI**	**(1000)**	80
TTL-AS	SN54AS1242	† TI		
	SN54AS1243	† TI		
	SN54AS242	**† TI**	**(999)**	
	SN54AS243	**† TI**	**(1000)**	
	SN74AS1242	TI		85
	SN74AS242	**TI**	**(999)**	
	SN74AS243	**TI**	**(1000)**	
TTL-F	54F242	† Fairchild		
	54F243	† Fairchild		
	74F242	Fairchild		90
	74F243	Fairchild		
	MC54F242	**† Motorola**	**(822)**	
	MC54F243	**† Motorola**	**(822)**	
	MC74F242	**Motorola**	**(822)**	
	MC74F243	**Motorola**	**(822)**	95
	54F242	† Signetics		
	54F243	† Signetics		
	74F242	**Signetics**	**(879)**	
	74F243	**Signetics**	**(879)**	
TTL-LS	74LS242	Fairchild		100
	74LS243	Fairchild		
	HD74LS242	Hitachi		
	HD74LS243	Hitachi		
	M74LS242	Mitsubishi		
	M74LS243	Mitsubishi		105
	SN54LS242	† Motorola		
	SN54LS243	† Motorola		
	SN74LS242	Motorola		
	SN74LS243	Motorola		
	DM54LS242	† National		110
	DM54LS243	† National		
	DM74LS242	National		
	DM74LS243	National		
	74LS242	Signetics		
	74LS243	Signetics		115
	74S242	Signetics		
	74S243	Signetics		
	SN54LS242	† TI		
	SN54LS243	† TI		
			(Continued)	

Function	Device	Source		Line
Quad Bus Transceiver				
TTL-LS			(Cont'd)	
	SN74LS242	TI		120
	SN74LS243	TI		
TTL-S	DM54S242	† National		
	DM54S243	† National		
	DM74S242	National		
	DM74S243	National		125
Quad Tridirectional Bus Transceiver, Three-State				
TTL-LS	**SN54LS442**	**† TI**	**(1035,1036)**	
	SN54LS443	**† TI**	**(1035,1036)**	
	~~**SN54LS444**~~	~~**† TI**~~	~~**(1035,1036)**~~	
	SN54LS448	**† TI**	**(1039)**	
	SN74LS442	**TI**	**(1035,1036)**	130
	SN74LS443	**TI**	**(1035,1036)**	
	SN74LS444	**TI**	**(1035,1036)**	
	SN74LS448	**TI**	**(1039)**	
Hex 2-Input, Three-State				
TTL-ALS	**SN54ALS857**	**† TI**	**(1102)**	
	SN74ALS857	**TI**	**(1102)**	135
TTL-AS	**SN54AS857**	**† TI**	**(1102)**	
	SN74AS857	**TI**	**(1102)**	
Octal Bus Driver, Inverting, Open Collector, Symmetrical Controls				
TTL-AS	**SN54AS756**	**† TI**	**(1091)**	
	SN74AS756	**TI**	**(1091)**	
Octal Bus Driver, Inverting, Three-State, Complementary Controls				
	SN54S210	† MMI		140
	SN74S210	MMI		
Octal Bus Driver, Inverting, Three-State, Symmetrical Controls				
TTL-ALS	**SN54ALS240**	**† Motorola**	**(823)**	
	SN54ALS540	**† Motorola**	**(823)**	
	SN74ALS240	**Motorola**	**(823)**	
	SN74ALS540	**Motorola**	**(823)**	145
	DM54ALS240	† National		
	DM74ALS240	National		
	SN54ALS540	**† TI**	**(1050)**	
	SN74ALS540	**TI**	**(1050)**	
TTL-AS	**SN54ALS1240**	**† TI**	**(1119)**	150
	SN54ALS240	**† TI**	**(998)**	
	SN54AS240	**† TI**	**(998)**	
	SN74ALS1240	**TI**	**(1119)**	
	SN74ALS240	**TI**	**(998)**	
	SN74AS240	**TI**	**(998)**	155
TTL-F	**54F240**	**† Fairchild**	**(729)**	
	74F240	**Fairchild**	**(729)**	
	MC54F240	**† Motorola**	**(822)**	
	MC74F240	**Motorola**	**(822)**	
	54F240	**† Signetics**	**(881)**	160
	74F240	**Signetics**	**(879,881)**	
TTL-LS	54LS240	† Fairchild		
	74LS240	Fairchild		
	74LS540	Fairchild		
	HD74LS240	Hitachi		165
	SN54LS210	**† MMI**	**(804)**	
	SN54LS240	**† MMI**	**(804)**	
	SN54LS340	**† MMI**	**(804)**	
	SN74LS210	**MMI**	**(804)**	
	SN74LS240	**MMI**	**(804)**	170
	SN74LS340	**MMI**	**(804)**	
	SN54LS240	† Motorola		
	SN54LS540	† Motorola		
	SN74LS240	Motorola		
	SN74LS540	Motorola		175
	DM54LS240	† National		
	DM74LS240	National		
	74LS240	Signetics		
	SN54LS240	† TI		
	SN54LS540	**† TI**	**(1050)**	180
	SN74LS240	TI		
			(Continued)	

† Military Temperature Range (−55° to 125°C)

* Typical Value

Bold face indicates additional data is provided on the page noted.

DIGITAL–TTL (Cont'd)

Transceivers, Bus (Cont'd)

Function	Device	Source	
Octal Bus Driver, Inverting, Three-State, Symmetrical Controls			
TTL-LS			(Cont'd)
	SN74LS540	**TI**	**(1050)**
TTL-S	M74LS240	Mitsubishi	
	SN54S240	**† MMI**	**(804)**
	SN74S240	**MMI**	**(804)**
	54LS240	**† Signetics**	**(530)**
	54S240	**† Signetics**	**(531)**
	74S240	Signetics	
	SN54S240	† TI	
	SN74S240	TI	
	SN74S340	TI	
Octal Bus Driver, Non-Inverting, Open Collector, Complementary Controls			
TTL-AS	**SN54AS757**	**† TI**	**(1091)**
	SN74AS757	**TI**	**(1091)**
Octal Bus Driver, Non-Inverting, Three-State, Complementary Controls			
TTL-ALS	**SN54ALS241**	**† Motorola**	**(823)**
	SN54ALS541	**† Motorola**	**(823)**
	SN74ALS241	**Motorola**	**(823)**
	SN74ALS541	**Motorola**	**(823)**
	DM54ALS241	† National	
	DM74ALS241	National	
Octal Bus Driver, Non-Inverting, Three-State Complementary Controls			
TTL-ALS	DM74ALS244	National	
Octal Bus Driver, Non-Inverting, Three-State, Complementary Controls			
TTL-ALS	**SN54ALS1241**	**TI**	**(1119)**
	SN54ALS1244	**† TI**	**(1120)**
	SN54ALS241	**† TI**	**(999)**
	SN54ALS541	**† TI**	**(1050)**
	SN74ALS1241	**TI**	**(1119)**
	SN74ALS241	**TI**	**(999)**
	SN74ALS541	**TI**	**(1050)**
TTL-AS	**SN54AS241**	**† TI**	**(999)**
	SN54AS244	**† TI**	**(1000)**
	SN74AS241	**TI**	**(999)**
TTL-F	**54F241**	**† Fairchild**	**(729)**
	74F241	**Fairchild**	**(729)**
	MC54F241	**† Motorola**	**(822)**
	MC74F241	**Motorola**	**(822)**
	54F241	**† Signetics**	**(881)**
	74F241	**Signetics**	**(879,881)**
TTL-LS	54LS241	† Fairchild	
	74LS241	Fairchild	
	74LS541	Fairchild	
	HD74LS241	Hitachi	
	M74LS241	Mitsubishi	
	SN54LS241	**† MMI**	**(804)**
	SN54LS310	**† MMI**	**(804)**
	SN54LS341	**† MMI**	**(804)**
	SN74LS241	**MMI**	**(804)**
	SN74LS310	**MMI**	**(804)**
	SN74LS341	**MMI**	**(804)**
	SN54LS241	† Motorola	
	SN54LS541	† Motorola	
	SN74LS241	Motorola	
	SN74LS541	Motorola	
	DM54LS241	† National	
	DM54LS244	† National	
	DM74LS241	† National	
	DM74LS244	National	
	54LS241	**† Signetics**	**(530)**
	54LS541	† Signetics	
	74LS241	Signetics	
	74LS541	Signetics	

(Continued)

Function	Device	Source	
Octal Bus Driver, Non-Inverting, Three-State, Complementary Controls			
TTL-LS			(Cont'd)
	SN54LS241	† TI	
	SN54LS541	**† TI**	**(1050)**
	SN74LS241	TI	
	SN74LS541	**TI**	**(1050)**
TTL-S	**SN54S241**	**† MMI**	**(804)**
	SN74S241	**MMI**	**(804)**
	54S241	**† Signetics**	**(531)**
	74S241	Signetics	
	SN54S241	† TI	
Octal Bus Driver, Non-Inverting, Three-State Complementary Controls			
TTL-S	SN54S744	† TI	
Octal Bus Driver, Non-Inverting, Three-State, Complementary Controls			
TTL-S	SN74S241	TI	
	SN74S341	TI	
Octal Bus Driver. Non-Inverting. Three-State Complementary Controls			
TTL-S	SN74S744	TI	
Octal Bus Driver, Non-Inverting, Three-State Symmetrical Controls			
TTL-ALS	**SN54ALS244**	**† Motorola**	**(823)**
	SN74ALS244	**Motorola**	**(823)**
	DM54ALS244	† National	
Octal Bus Driver, Non-Inverting, Three-State, Symmetrical Controls			
TTL-ALS	**SN54ALS244**	**† TI**	**(1000)**
	SN74ALS1244	**TI**	**(1120)**
	SN74ALS244	**TI**	**(1000)**
TTL-AS	**SN54AS230**	**† TI**	**(998)**
	SN54AS231	**† TI**	**(998)**
	SN74AS230	**TI**	**(998)**
	SN74AS231	**TI**	**(998)**
	SN74AS244	**TI**	**(1000)**
TTL-F	**54F244**	**† Fairchild**	**(729)**
	74F244	**Fairchild**	**(729)**
	MC54F244	**† Motorola**	**(822)**
	MC74F244	**Motorola**	**(822)**
	54F244	**† Signetics**	**(882)**
	74F244	**Signetics**	**(879,882)**
TTL-LS	54LS244	† Fairchild	
	74LS244	Fairchild	
	HD74LS244	Hitachi	
	M74LS244	Mitsubishi	
	SN54LS244	**† MMI**	**(804)**
	SN54LS344	**† MMI**	**(804)**
	SN74LS244	**MMI**	**(804)**
	SN74LS344	**MMI**	**(804)**
	SN54LS244	† Motorola	
	SN74LS244	Motorola	
	54LS244	**† Signetics**	**(530)**
	74LS244	Signetics	
	SN54LS244	† TI	
	SN74LS244	TI	
TTL-S	**SN54S244**	**† MMI**	**(804)**
	SN74S244	**MMI**	**(804)**
	54S244	**† Signetics**	**(531)**
	74S244	Signetics	
	SN54S244	† TI	
	SN74S344	TI	
Octal Bus Driver. Open Collector. Complementary Controls			
TTL-AS	**SN54AS763**	**† TI**	**(1093)**
	SN74AS763	**TI**	**(1093)**

Function	Device	Source	
Octal Bus Driver, Open Collector, Symmetrical Controls			
TTL-AS	**SN54AS760**	**† TI**	**(1092)**
	SN54AS762	**† TI**	**(1093)**
	SN74AS760	**TI**	**(1092)**
	SN74AS762	**TI**	**(1093)**
Octal Bus Driver (Schmitt trigger), Inverting, Three-State			
TTL-LS	**DN74LS240**	**Panasonic**	**(826,834)**
TTL-S	SN54S740	† TI	
	SN74S740	TI	
Octal Bus Driver (Schmitt trigger), Non-Inverting, Three-State, Complementary Controls			
TTL-LS	**DN74LS244**	**Panasonic**	**(826,834)**
Octal Bus Driver (Schmitt trigger), Non-Inverting, Three-State, Symmetrical Controls			
TTL-LS	**DN74LS241**	**Panasonic**	**(826,834)**
Octal Bus Transceiver, GPIB Compatible			
TTL-F	**74F588**	**Signetics**	**(880)**
Octal Bus Transceiver, Interface Between OC and TS Buses			
TTL-ALS	**SN54ALS638**	**† Motorola**	**(823)**
	SN54ALS639	**† Motorola**	**(823)**
	SN74ALS638	**Motorola**	**(823)**
	SN74ALS639	**Motorola**	**(823)**
	SN54ALS1638	**† TI**	**(1123)**
	SN54ALS1639	**TI**	**(1123)**
	SN54ALS638	**† TI**	**(1073)**
	SN54ALS639	**† TI**	**(1073)**
	SN74ALS1638	**TI**	**(1123)**
	SN74ALS1638-1	**† TI**	**(1123)**
	SN74ALS1639	**† TI**	**(1123)**
	SN74ALS1639-1	**TI**	**(1123)**
	SN74ALS638	**TI**	**(1073)**
	SN74ALS639	**TI**	**(1073)**
TTL-AS	**SN54AS638**	**† TI**	**(1073)**
	SN54AS639	**† TI**	**(1073)**
	SN74AS638	**TI**	**(1073)**
	SN74AS639	**TI**	**(1073)**
Octal Bus Transceiver, Inverting, Open Collector			
TTL-ALS	**SN54ALS642**	**† Motorola**	**(823)**
	SN74ALS642	**Motorola**	**(823)**
	DM54ALS642	† National	
	DM74ALS642	National	
	SN54ALS1642	**† TI**	**(1124)**
	SN54ALS642	**† TI**	**(1074)**
	SN74ALS1642	**TI**	**(1124)**
	SN74ALS1642-1	**† TI**	**(1124)**
	SN74ALS642	**† TI**	**(1074)**
TTL-AS	**SN54AS642**	**† TI**	**(1074)**
	SN74AS642	**TI**	**(1074)**
TTL-LS	M74LS642-1	Mitsubishi	
	SN54LS642	† Motorola	
	SN74LS642	Motorola	
	74LS642	Signetics	
	74LS642-1	Signetics	
	SN54LS642	**† TI**	**(1074)**
	SN74LS642	**TI**	**(1074)**
	SN74LS642-1	**TI**	**(1074)**
Octal Bus Transceiver, Inverting, Three-State			
TTL-ALS	**SN54ALS640**	**† Motorola**	**(823)**
	SN54ALS643	**† Motorola**	**(823)**
	SN74ALS640	**Motorola**	**(823)**
	SN74ALS643	**Motorola**	**(823)**
	DM54ALS643	† National	
	DM74ALS640	National	
	DM74ALS643	National	
	SN54ALS1640	**† TI**	**(1124)**
	SN54ALS1643	**TI**	**(1124)**
	SN54ALS640	**† TI**	**(1074)**
	SN54ALS643	**† TI**	**(1074)**

(Continued)

† Military Temperature Range (−55° to 125°C)

* Typical Value

Bold face indicates additional data is provided on the page noted.

© IC MASTER 1984

DIGITAL–TTL (Cont'd)

Transceivers, Bus (Cont'd)

Function	Device	Source		Line
Octal Bus Transceiver, Inverting, Three-State				
TTL-ALS			(Cont'd)	
	SN74ALS1640	**TI**	**(1124)**	
	SN74ALS1640-1	**† TI**	**(1124)**	
	SN74ALS1643	**† TI**	**(1124)**	
	SN74ALS1643-1	**TI**	**(1124)**	
	SN74ALS640	**TI**	**(1074)**	5
	SN74ALS643	**TI**	**(1074)**	
	SN74ALS651	**TI**	**(1078)**	
	SN74ALS652	**TI**	**(1078)**	
TTL-AS	**SN54AS640**	**† TI**	**(1074)**	
	SN54AS643	**† TI**	**(1074)**	10
	SN54AS651	**† TI**	**(1078)**	
	SN54AS652	**† TI**	**(1078)**	
	SN74AS640	**TI**	**(1074)**	
	SN74AS643	**TI**	**(1074)**	
	SN74AS651	**TI**	**(1078)**	15
	SN74AS652	**TI**	**(1078)**	
TTL-F	**MC54F640**	**† Motorola**	**(822)**	
	MC54F643	**† Motorola**	**(822)**	
	MC74F640	**Motorola**	**(822)**	
	MC74F643	**Motorola**	**(822)**	20
TTL-LS	M74LS640-1	Mitsubishi		
	M74LS643-1	Mitsubishi		
	SN54LS640	† Motorola		
	SN54LS643	† Motorola		
	SN74LS640	Motorola		25
	SN74LS643	Motorola		
	74LS640	Signetics		
	74LS640-1	Signetics		
	N8T125	**Signetics**	**(876)**	
	S8T125	**† Signetics**	**(876)**	30
	SN54LS640	**† TI**	**(1074)**	
	SN54LS643	**† TI**		
			(1074)	
	SN74LS640	**TI**	**(1074)**	
	SN74LS640-1	**TI**	**(1074)**	
	SN74LS643	**TI**	**(1074)**	35
	SN74LS643-1	**TI**	**(1074)**	
	SN74LS651	**TI**	**(1078)**	
	SN74LS652	**TI**	**(1078)**	
Octal Bus Transceiver, MOS Driver, Inverting				
TTL-AS	**SN54AS2620**	**† TI**	**(1126)**	
	SN54AS2640	**† TI**	**(1127)**	40
	SN74AS2620	**TI**	**(1126)**	
	SN74AS2640	**TI**	**(1127)**	
Octal Bus Transceiver, MOS Driver, Inverting/Non-inverting				
TTL-AS	SN54AS2643	† TI		
	SN74AS2643	TI		
Octal Bus Transceiver, MOS Driver, Non-inverting				
TTL-AS	**SN54AS2623**	**† TI**	**(1126)**	45
	SN54AS2645	**† TI**	**(1127)**	
	SN74AS2623	**TI**	**(1126)**	
	SN74AS2645	**TI**	**(1127)**	
Octal Bus Transceiver, Noninverting, Open Collector				
TTL-ALS	**SN54ALS641**	**† Motorola**	**(823)**	
	SN74ALS641	**Motorola**	**(823)**	50
	DM54ALS641	† National		
	DM74ALS641	National		
	SN54ALS1641	**† TI**	**(1124)**	
	SN54ALS641	**† TI**	**(1074)**	
	SN74ALS1641	**TI**	**(1124)**	55
	SN74ALS1641-1	**TI**	**(1124)**	
	SN74ALS641	**TI**	**(1074)**	
TTL-AS	**SN54AS641**	**† TI**	**(1074)**	
	SN74AS641	**TI**	**(1074)**	
TTL-LS	M74LS641	Mitsubishi		60
	SN54LS641	† Motorola		
	SN74LS641	Motorola		
			(Continued)	

Function	Device	Source		Line
Octal Bus Transceiver, Noninverting, Open Collector				
TTL-LS			(Cont'd)	
	54LS641	† Signetics		
	74LS641	Signetics		
	74LS641-1	Signetics		65
	SN54LS641	**† TI**	**(1074)**	
	SN74LS641	**TI**	**(1074)**	
	SN74LS641-1	**TI**	**(1074)**	
Octal Bus Transceiver, Noninverting, Three-State				
TTL-ALS	**SN54ALS245**	**† Motorola**	**(823)**	
	SN54ALS651	**† Motorola**	**(823)**	70
	SN54ALS652	**† Motorola**	**(823)**	
	SN74ALS245	**Motorola**	**(823)**	
	SN74ALS651	**Motorola**	**(823)**	
	SN74ALS652	**Motorola**	**(823)**	
	DM54ALS245	† National		75
	DM74ALS245	National		
	SN54ALS1245	**† TI**	**(1120)**	
	SN54ALS1645	**† TI**	**(1124)**	
	SN54ALS245	**† TI**	**(1001)**	
	SN54ALS645	**† TI**	**(1074)**	80
	SN54ALS651	**† TI**	**(1078)**	
	SN54ALS652	**† TI**	**(1078)**	
	SN74ALS1245	**TI**	**(1120)**	
	SN74ALS1645	**TI**	**(1124)**	
	SN74ALS1645-1	**TI**	**(1124)**	85
	SN74ALS245	**TI**	**(1001)**	
	SN74ALS645	**TI**	**(1074)**	
TTL-AS	**SN54AS245**	**† TI**	**(1001)**	
	SN54AS645	**† TI**	**(1074)**	
	SN74AS245	**TI**	**(1001)**	90
	SN74AS645	**TI**	**(1074)**	
TTL-F	54F245	† Fairchild		
	54F545	† Fairchild		
	74F245	Fairchild		
	74F545	Fairchild		95
	MC54F245	**† Motorola**	**(822)**	
	MC54F2960	**Motorola**	**(822)**	
	MC54F645	† Motorola		
	MC74F245	**Motorola**	**(822)**	
	MC74F2960	**Motorola**	**(822)**	100
	MC74F645	Motorola		
	54F245	**† Signetics**	**(883)**	
	74F245	**Signetics**		
			(879,883)	
	74F545	**Signetics**	**(879)**	
TTL-LS	DP8304B	AMD		105
	54LS245	† Fairchild		
	74LS245	Fairchild		
	HD74LS245	Hitachi		
	M74LS245	Mitsubishi		
	M74LS645-1	Mitsubishi		110
	SN54LS245	**† MMI**	**(804)**	
	SN54LS645	**† MMI**	**(804)**	
	SN74LS245	**MMI**	**(804)**	
	SN74LS645	**MMI**	**(804)**	
	SN74LS645-1	**MMI**	**(804)**	115
	SN54LS245	† Motorola		
	SN54LS645	† Motorola		
	SN74LS245	Motorola		
	SN74LS645	Motorola		
	DM54LS245	† National		120
	DM74LS245	National		
	DN74LS245	**Panasonic**		
			(826,834)	
	54LS245	**† Signetics**	**(530)**	
	54LS645	† Signetics		
	74LS245	Signetics		125
	74LS645	Signetics		
	~~**N8T245**~~	~~**Signetics**~~	~~**(876)**~~	
	S8T245	**† Signetics**	**(876)**	
	SN54LS245	† TI		
	SN54LS645	**† TI**	**(1074)**	130
			(Continued)	

Function	Device	Source		Line
Octal Bus Transceiver, Noninverting, Three-State				
TTL-LS			(Cont'd)	
	SN74LS245	TI		
	SN74LS645	**TI**	**(1074)**	
	SN74LS645-1	**TI**	**(1074)**	
Octal Bus Transceiver, True, Inverting, Open Collector				
TTL-ALS	**SN54ALS644**	**† Motorola**	**(823)**	
	SN74ALS644	**Motorola**	**(823)**	135
	DM54ALS644	† National		
	DM74ALS644	National		
	SN54ALS1644	**† TI**	**(1124)**	
	~~**SN54ALS644**~~	~~**† TI**~~	~~**(1074)**~~	
	SN74ALS1644	**TI**	**(1124)**	140
	SN74ALS1644-1	**† TI**	**(1124)**	
	SN74ALS644	**TI**	**(1074)**	
TTL-AS	**SN54AS644**	**† TI**	**(1074)**	
	SN74AS644	**TI**	**(1074)**	
TTL-LS	M74LS644-1	Mitsubishi		145
	SN54LS644	† Motorola		
	SN74LS644	Motorola		
	SN54LS644	**† TI**	**(1074)**	
	SN74LS644	**TI**	**(1074)**	
	SN74LS644-1	**TI**	**(1074)**	150
Octal Bus Transceiver with Parity Generator-Checker				
TTL-F	**74F657**	**Signetics**	**(880)**	
Octal Bus Transceiver with Register, Inverting				
TTL-ALS	MC54ALS653	† Motorola		
	MC74ALS653	Motorola		
	SN54ALS653	**† TI**	**(1079)**	
	SN74ALS653	**TI**	**(1079)**	155
	SN74ALS653-1	**† TI**	**(1079)**	
TTL-LS	**SN54LS653**	**† TI**	**(1079)**	
	SN74LS653	**TI**	**(1079)**	
Octal Bus Transceiver with Register, Non-inverting				
TTL-ALS	MC54ALS654	† Motorola		
	MC74ALS654	Motorola		160
	SN54ALS654	**TI**	**(1079)**	
	SN74ALS654	**† TI**	**(1079)**	
	SN74ALS654-1	**TI**	**(1079)**	
TTL-LS	**SN54LS654**	**† TI**	**(1079)**	
	SN74LS654	**TI**	**(1079)**	165
Octal Bus Transceiver with Register, Open Collector				
TTL-ALS	**SN54ALS647**	**† Motorola**	**(823)**	
	SN54ALS649	**† Motorola**	**(823)**	
	SN74ALS647	**Motorola**	**(823)**	
	SN74ALS649	**Motorola**	**(823)**	
	DM54ALS647	† National		170
	DM54ALS649	† National		
	DM74ALS647	National		
	DM74ALS649	National		
TTL-F	**54F647**	**† Signetics**	**(889)**	
	54F649	**† Signetics**	**(889)**	175
	74F647	**Signetics**		
			(880,889)	
	74F649	**Signetics**		
			(880,889)	
Octal Bus Transceiver with Register, Open-Collector				
TTL-ALS	**SN54ALS647**	**TI**	**(1076)**	
	SN54ALS649	**TI**	**(1076)**	
	SN74ALS647	**† TI**	**(1076)**	180
	SN74ALS647-1	**TI**	**(1076)**	
	SN74ALS649	**† TI**	**(1076)**	
	SN74ALS649-1	**TI**	**(1076)**	
Octal Bus Transceiver with Register, Three-State				
TTL-ALS	**SN54ALS646**	**† TI**	**(1076)**	
	SN54ALS648	**† TI**	**(1076)**	185
	SN54ALS651	† TI		
	SN54ALS652	† TI		
	SN54LS651	**† TI**	**(1078)**	
	SN54LS652	**† TI**	**(1078)**	
	SN74ALS646	**TI**	**(1076)**	190
			(Continued)	

† Military Temperature Range (−55° to 125°C)

* Typical Value

Bold face indicates additional data is provided on the page noted.

Transceivers, Bus (Cont'd)

Function	Device	Source	Line
Octal Bus Transceiver with Register, Three-State			
TTL-ALS			(Cont'd)
	SN74ALS646-1	**† TI**	**(1076)**
	SN74ALS648	**TI**	**(1076)**
	SN74ALS648-1	**† TI**	**(1076)**
	SN74ALS651	TI	
	SN74ALS651-1	**† TI**	**(1078)**
	SN74ALS652	TI	
	SN74ALS652-1	**TI**	**(1078)**
TTL-AS	**SN54AS646**	**† TI**	**(1076)**
	SN54AS648	**† TI**	**(1076)**
	SN74AS646	**TI**	**(1076)**
	SN74AS648	**TI**	**(1076)**
TTL-F	54F543	† Fairchild	
	54F544	† Fairchild	
	54F550	† Fairchild	
	54F551	† Fairchild	
	74F543	Fairchild	
	74F544	Fairchild	
	74F550	Fairchild	
	74F551	Fairchild	
	54F646	**† Signetics**	**(889)**
	54F648	**† Signetics**	**(889)**
	74F646	**Signetics**	**(880,889)**
	74F648	**Signetics**	**(880,889)**
TTL-LS	SN74LS651	TI	
	SN74LS652	TI	
Octal Bus Transceiver with Storage, Open Collector			
TTL-ALS	**SN54ALS622**	**Motorola**	**(823)**
	SN74ALS622	**Motorola**	**(823)**
Octal Bus Transceiver with Storage, Open-Collector			
TTL-ALS	**SN54ALS621**	**† Motorola**	**(823)**
	SN74ALS621	**Motorola**	**(823)**
	SN54ALS1621	**TI**	**(1122)**
	SN54ALS1622	**† TI**	**(1122)**
	SN54ALS621	**† TI**	**(1066)**
	SN54ALS622	**† TI**	**(1066)**
	SN74ALS1621	**† TI**	**(1122)**
	SN74ALS1621-1	**TI**	**(1122)**
	SN74ALS1622	**TI**	**(1122)**
	SN74ALS1622-1	**† TI**	**(1122)**
	SN74ALS621	**TI**	**(1066)**
	SN74ALS622	**TI**	**(1066)**
TTL-AS	**SN54AS621**	**† TI**	**(1066)**
	SN54AS622	**† TI**	**(1066)**
	SN74AS621	**TI**	**(1066)**
	SN74AS622	**TI**	**(1066)**
TTL-F	MC54F621	† Motorola	
	MC74F621	Motorola	
	74F621	**Signetics**	**(880)**
	74F622	**Signetics**	**(880)**
TTL-LS	SN54LS621	† Motorola	
	SN54LS622	† Motorola	
	SN74LS621	Motorola	
	SN74LS622	Motorola	
Octal Bus Transceiver with Storage, Three-State			
TTL-ALS	**SN54ALS620**	**† Motorola**	**(823)**
	SN54ALS623	**† Motorola**	**(823)**
	SN74ALS620	**Motorola**	**(823)**
	SN74ALS623	**Motorola**	**(823)**
	DM54ALS620	† National	
	DM54ALS622	† National	
	DM54ALS623	† National	
	DM74ALS620	National	
	DM74ALS622	National	
	DM74ALS623	National	
	SN54ALS1620	**† TI**	**(1122)**
	SN54ALS1623	**TI**	**(1122)**
			(Continued)

Function	Device	Source	Line
Octal Bus Transceiver with Storage, Three-State			
TTL-ALS			(Cont'd)
	SN54ALS620	**† TI**	**(1066)**
	SN54ALS623	**† TI**	**(1066)**
	SN74ALS1620	**TI**	**(1122)**
	SN74ALS1620-1	**† TI**	**(1122)**
	SN74ALS1623	**† TI**	**(1122)**
	SN74ALS1623-1	**TI**	**(1122)**
	SN74ALS620	**TI**	**(1066)**
	SN74ALS623	**TI**	**(1066)**
TTL-AS	**SN54AS620**	**† TI**	**(1066)**
	SN54AS623	**† TI**	**(1066)**
	SN74AS620	**TI**	**(1066)**
	SN74AS623	**TI**	**(1066)**
TTL-F	**MC54F620**	**† Motorola**	**(822)**
	MC54F623	**† Motorola**	**(822)**
	MC74F620	**Motorola**	**(822)**
	MC74F623	**Motorola**	**(822)**
	74F620	**Signetics**	**(880)**
	74F623	**Signetics**	**(880)**
TTL-LS	SN54LS623	† Motorola	
	SN74LS620	Motorola	
	SN74LS623	Motorola	
	54LS623	† Signetics	
	74LS620	Signetics	
	74LS623	Signetics	
Octal Bus Transceiver, Three-State, with Latch			
TTL-ALS	**SN54ALS526**	**† TI**	**(1045)**
	SN74ALS526	**TI**	**(1045)**
TTL-F	54F526	† Fairchild	
	74F526	Fairchild	
8-Bit Bidirectional Bus Transceiver, Tri-State I/O			
TTL-LS	MM82C08	National	
	MM82PC08	National	
8-Bit to 9-Bit Parity Bidirectional Bus Transceivers, Three-State			
TTL	**AM29833**	**AMD**	**(2806)**
	AM29834	**AMD**	**(2806)**
	AM29853	AMD	
	AM29854	AMD	
8-Bit Universal Transceiver, Port Controller			
TTL-AS	**SN54AS852**	**† TI**	**(1101)**
	SN54AS856	**† TI**	**(1101)**
	SN74AS852	**TI**	**(1101)**
	SN74AS856	**TI**	**(1101)**
9-Bit Bidirectional Bus Transceiver, Three-State			
TTL	**AM29864**	**AMD**	**(2804)**
TTL-LS	**AM29863**	**AMD**	**(2804)**
10-Bit Bidirectional Bus Transceiver, Three-State			
TTL	**AM29861**	**AMD**	**(2804)**
	AM29862	**AMD**	**(2804)**

Translators

For other translators, see Interface-Sense Amplifiers and also Memory and Peripheral Drivers

Function	Device	Source	Line
Dual MOS to TTL Level Converter			
TTL	9625C	Fairchild	
	9625M	† Fairchild	
Dual MOS to TTL Level, Three-State			
TTL	MC54468	† Motorola	
	MC74468	Motorola	
Dual TTL to MOS Voltage			
TTL	D139A	† Siliconix	
	D139B	Siliconix	
TTL-ALS	**SN54ALS646**	**† Motorola**	**(823)**
	SN54ALS648	**† Motorola**	**(823)**
	SN74ALS646	**Motorola**	**(823)**
	SN74ALS648	**Motorola**	**(823)**
	DM54ALS646	† National	
	DM54ALS648	† National	
			(Continued)

Function	Device	Source	Line
Dual TTL to MOS Voltage			
TTL-ALS			(Cont'd)
	DM74ALS646	National	
	DM74ALS648	National	
Dual 2-Input NAND TTL to MOS Voltage			
TTL	9624C	Fairchild	
	9624M	† Fairchild	
	DH0034	† National	
	DH0034C	National	
	DS7800	† National	
	DS8800	National	
	SN55180	† TI	
Quad TTL to MOS Inverter/Driver, Three-State			
TTL	SN75367	TI	
Hex DTL to TTL Inverter			
TTL	91009C	Fairchild	
Hex TTL to MOS Voltage			
TTL	DS78L12	† National	
	DS88L12	National	
	D123A	† Siliconix	
	D123B	Siliconix	
	D125A	**† Siliconix**	**(3080)**
	D125B	**Siliconix**	**(3080)**
7-Unit MOS to TTL Level Converter			
TTL	SN75270	TI	

Miscellaneous

Function	Device	Source	Line
Bidirectional Bus Extender and Repeater, Asynchronous			
TTL	**N8X41**	**Signetics**	**(1645)**
Bus Transfer Switch (transmit-receive connections to 4 bus terminals)			
TTL	MC4060	Motorola	
	MC74460	Motorola	
Contact Bounce Eliminator			
TTL	DM7544	† National	
	DM8544	National	
Counter, 50 MHz			
TTL-LS	SN54LS104	† TI	
	SN54LS105	† TI	
	SN74LS104	TI	
	SN74LS105	TI	
Cyclic Redundancy Checker			
TTL	9401C	Fairchild	
	9401M	† Fairchild	
	N8X01A	Signetics	
	N9401	**Signetics**	**(1656)**
Data Encryption, (4 device set)			
I²L	9414STC	Fairchild	
	9414STM	† Fairchild	
Delay Element			
TTL-LS	**SN54LS31**	**† TI**	**(930)**
	SN74LS31	**TI**	**(930)**
Dynamic RAM Refresh Controller			
	SN54LS600A	† TI	
	SN54LS601A	† TI	
	SN54LS602A	† TI	
	SN54LS603A	† TI	
	SN74LS600A	**TI**	**(1061)**
	SN74LS601A	**TI**	**(1061)**
	SN74LS602A	**TI**	**(1062)**
	SN74LS603A	**TI**	**(1062)**
TTL-LS	SN54LS600	† TI	
	SN54LS601	† TI	
	SN54LS602	† TI	
	SN54LS603	† TI	
	SN74LS600	TI	
	SN74LS601	TI	
	SN74LS602	TI	
	SN74LS603	TI	

† Military Temperature Range (−55° to 125°C)

* Typical Value

Bold face indicates additional data is provided on the page noted.

© IC MASTER 1984

DIGITAL–TTL (Cont'd)

Miscellaneous (Cont'd)

Function	Device	Source		Line
Error Correction Chip (ECC)				
TTL-LS	MB1412A	Fujitsu		
Error Detection and Correction Circuit				
TTL-ALS	**SN54ALS790**	**† Motorola**	**(823)**	
	SN74ALS790	**Motorola**	**(823)**	
TTL-LS	**SN74LS636**	**TI**	**(1072,1153)**	
	SN74LS637	**TI**	**(1072,1153)**	5
Fiber Optics Transmitter, Expandable, Octal to Serial				
TTL-LS	SN74LS462	TI		
Fiber Optics Transmitter, Expandable, Serial to Octal				
TTL-LS	SN74LS463	TI		
Field Programmable Array Logic				
TTL	DMPAL16A4M	† National		
FIFO RAM Emulator (12-Bit address)				
TTL-LS	**N8X60**	**Signetics**	**(1647)**	
FIFO, 16x4				
TTL-F	**54F403**	**† Fairchild**	**(743)**	10
	74F403	**Fairchild**	**(743)**	
FIFO, 64x4	**54F413**	**† Fairchild**	**(750)**	
	74F413	**Fairchild**	**(750)**	
TTL-F	**54F433**	**† Fairchild**	**(743)**	
	74F433	**Fairchild**	**(743)**	15
Floating Point ALU, 32-Bit IEEE				
	WTL1033C	Weitek		
	WTL1033M	† Weitek		
Floating Point Multiplier, 32-Bit IEEE				
	WTL1032C	Weitek		
	WTL1032M	† Weitek		
GPIB Adapter (IEEE 488 bus)				
TTL-LS	96LS488DC	Fairchild		20
	96LS488DM	† Fairchild		
GPIB Data Transceiver				
TTL-F	54F588	† Fairchild		
	74F588	Fairchild		
I/O Register Array (16x8 or 8x16)				
TTL-LS	**N8X320**	**Signetics**	**(1619,1652)**	
Memory Mapper, Expands 4 Address Lines to 12 Address Lines				
TTL-F	54F610	† Fairchild		25
	54F611	Fairchild		
	54F612	Fairchild		
	54F613	† Fairchild		
	74F610	Fairchild		
	74F611	Fairchild		30
	74F612	Fairchild		
	74F613	Fairchild		
TTL-LS	**SN54LS610**	**† TI**	**(1065)**	
	SN54LS611	**† TI**	**(1065)**	
	SN54LS612	**† TI**	**(1065)**	35
	SN54LS613	**† TI**	**(1065)**	
	SN74LS610	**TI**	**(1065)**	
	SN74LS611	**TI**	**(1065)**	
	SN74LS612	**TI**	**(1065)**	
	SN74LS613	**TI**	**(1065)**	40
Microprogram Sequencer				
TTL-LS	**AM2909A**	**AMD**	**(1407)**	
	AM2909C	**AMD**	**(1407)**	
	AM2909M	**† AMD**	**(1407)**	
	AM2911A	**AMD**	**(1407)**	
	AM2911C	**AMD**	**(1407)**	45
	AM2911M	**† AMD**	**(1407)**	
	M3001	Intel		
	IDM2909AC	National		
	IDM2909AM	† National		
	IDM2911AC	National		50
	IDM2911AM	† National		
	N3001	**Signetics**	**(1663)**	

(Continued)

Function	Device	Source		Line
Microprogram Sequencer				
TTL-LS			(Cont'd)	
	N8X02A	**Signetics**	**(1653)**	
	S3001	**† Signetics**	**(1663)**	
Micro-Address Generator (for bit slice microprocessor)				
TTL-S	**SN54S482**	**† TI**	**(1042)**	55
	SN74S482	**TI**	**(1042)**	
Multilevel Pipeline Register				
TTL	**AM29520**	**AMD**	**(702)**	
	AM29521	**AMD**	**(702)**	
Multimode Associative Stack				
TTL-S	DP8402	National		
Multiplier/Accumulator (16x16)				
	WTL1010AC	Weitek		60
	WTL1010AM	† Weitek		
	WTL1010C	Weitek		
	WTL1010M	† Weitek		
	WTL1043	Weitek		
Oscillator Clock/Driver				
TTL-LS	**SN54LS320**	**† TI**	**(1017)**	65
	SN54LS321	**† TI**	**(1017)**	
	SN74LS320	**TI**	**(1017)**	
	SN74LS321	**TI**	**(1017)**	
Phase Locked Loop				
TTL	MC12000	Motorola		
	MC12500	Motorola		70
TTL-LS	**SN54LS297**	**† TI**	**(1015)**	
	SN74LS297	**TI**	**(1015)**	
Phase-Frequency Detector				
TTL	MC4044	Motorola		
	MC4344	† Motorola		
Polymonial Generator				
TTL	MC8506	Motorola		75
Programmable FET Address Sequencer				
TTL	**AM29540**	**AMD**	**(703)**	
Signal Processor, 8-Bit Slice Programmable				
TTL	**AM29501**	**AMD**	**(702)**	
Synchronous Decade Rate Multiplier				
TTL	54167	† Fairchild		
	74167	Fairchild		
	MC74167	Motorola		80
	SN54167	**† TI**	**(980)**	
	SN74167	**TI**	**(980)**	
TTL-S	54S167	† Fairchild		
	74S167	Fairchild		
Voltage Comparator (analog input-digital output)				
TTL-S	AM686C	AMD		85
	AM686M	† AMD		
Voltage Controlled Oscillator (or crystal controlled)				
TTL-LS	**SN54LS624**	**† TI**	**(1067)**	
	SN54LS628	**† TI**	**(1068)**	
	SN74LS324	TI		
	SN74LS624	**TI**	**(1067)**	90
	SN74LS628	**TI**	**(1068)**	
Voltage-Controlled Oscillator, Low Power				
TTL-LS	SN74LS724	Motorola		
Binary-To-BCD Converter				
TTL	DM54185A	† National		
	DM74185A	National		
	DM8899	National		95
	SN54185A	**† TI**	**(988)**	
	SN74185A	**TI**	**(988)**	
BCD-To-Binary Converter (three-state 54/74184)				
TTL	DM8898	National		
BCD-To-Binary Converter				
TTL	ZN54184	† Ferranti		
	ZN74184	Ferranti		100
	DM54184	† National		
	DM74184	National		

(Continued)

Function	Device	Source		Line
BCD-To-Binary Converter				
TTL			(Cont'd)	
	SN54184	**† TI**	**(987)**	
	SN74184	**TI**	**(987)**	
Dual Pulse Synchronizer/Driver				
TTL	MC74120	Motorola		105
	SN54120	**† TI**	**(961)**	
	SN74120	**TI**	**(961)**	
Dual Voltage Controlled Oscillator (or crystal controlled)				
TTL-LS	SN54LS325	† TI		
	SN54LS326	† TI		
	SN54LS327	† TI		110
	SN74LS124	TI		
	SN74LS325	TI		
	SN74LS326	TI		
	SN74LS327	TI		
TTL-S	**SN54LS625**	**† TI**	**(1067)**	115
	SN54LS626	**† TI**	**(1067)**	
	SN54LS627	**† TI**	**(1068)**	
	SN54LS629	**† TI**	**(1068)**	
	SN74LS328	TI		
	SN74LS625	**TI**	**(1067)**	120
	SN74LS626	**TI**	**(1067)**	
	SN74LS627	**TI**	**(1068)**	
	SN74LS629	**TI**	**(1068)**	
Dual 4-Bit Parity Tree				
TTL	MC4010	Motorola		
	MC4310	† Motorola		125
Dual 4-Input NAND Schmitt-Trigger				
TTL	5413	† Fairchild		
	7413	Fairchild		
	ZN5413	† Ferranti		
	ZN7413	Ferranti		
	HD7413	Hitachi		130
	MC7413	Motorola		
	5413	† National		
	DM7413	National		
	5413	**† Signetics**	**(860)**	
	7413	**Signetics**	**(860)**	135
	SN5413	**† TI**	**(924)**	
	SN7413	**TI**	**(924)**	
TTL-ALS	**SN54ALS13**	**† Motorola**	**(822)**	
	SN74ALS13	**Motorola**	**(822)**	
TTL-F	**74F13**	**Signetics**	**(879)**	140
TTL-LS	54LS13	† Fairchild		
	74LS13	Fairchild		
	HD74LS13	Hitachi		
	M74LS13	Mitsubishi		
	SN54LS13	† Motorola		145
	SN74LS13	Motorola		
	DM54LS13	† National		
	DM74LS13	National		
	DM74LS13	**Panasonic**	**(826,834)**	
	54LS132	† SGS		150
	74LS132	SGS		
	T54LS13	† SGS		
	T74LS13	SGS		
	54LS13	† Signetics		
	74LS13	Signetics		155
	SN54LS13	**† TI**	**(924)**	
	SN54LS18	**† TI**	**(926)**	
	SN74LS13	**TI**	**(924)**	
	SN74LS18	**TI**	**(926)**	
TTL-S	54S13	† Signetics		160
Dual 6-Input Expander (for H50, H53, H55)				
TTL-H	54H60	† Fairchild		
	DM54H60	† National		
	DM74H60	National		
	SN54H60	**† TI**	**(940)**	
	SN74H60	**TI**	**(940)**	165

† Military Temperature Range (−55° to 125°C)

* Typical Value

Bold face indicates additional data is provided on the page noted.

DIGITAL–TTL (Cont'd)

Miscellaneous (Cont'd)

Function	Device	Source	Line
Triple Bidirectional Bus Switch, Three-State (connects any 2 of 3 inputs together)			
TTL-S	MC6881	Motorola	
Triple 3-Input Expander (for H52)			
TTL-H	54H61	† Fairchild	
	74H61	Fairchild	
	DM54H61	† National	
	DM74H61	National	5
	SN54H61	**† TI (940)**	
	SN74H61	**TI (940)**	
Quad Backplane Transceiver			
TTL	AM26LS38	AMD	
Quad Bus Receiver			
TTL	**N8T380**	**Signetics (876)**	
Quad Bus Transceiver			
TTL-AS	SN74AS1243	TI	10
Quad Complementary-Output Elements (for symmetrical generation of complementary outputs)			
TTL	**SN54265**	**† TI (1007)**	
	SN74265	**TI (1007)**	
Quad Power Strobe (Vcc strobe or digit driver)			
TTL	HD6600-2	† Harris	
	HD6600-5	Harris	
	HD6600	**† MMI (819)**	15
	HD6605	**MMI (819)**	
Quad 2-Input NAND Schmitt-Trigger			
TTL	54132	† Fairchild	
	74132	Fairchild	
	HD74132	Hitachi	
	MC74132	Motorola	20
	DM54132	† National	
	DM74132	National	
	54132	**† Signetics (861)**	
	74132	**Signetics (861)**	
	SN54132	**† TI (965)**	25
	SN74132	**TI (965)**	
TTL-ALS	**SN54ALS132**	**† Motorola (823)**	
	SN74ALS132	**Motorola (823)**	
TTL-F	**74F132**	**Signetics (879)**	
TTL-LS	54LS132	† Fairchild	30
	74LS132	Fairchild	
	HD74LS132	Hitachi	
	M74LS132	Mitsubishi	
	SN54LS132	† Motorola	
	SN74LS132	Motorola	35
	DM54LS132	† National	
	DM74LS132	National	
	DN74LS132	**Panasonic (826,834)**	
	54LS132	**† Signetics (529)**	
	54LS132A	**† Signetics (529)**	40
	74LS132	Signetics	
	SN54LS132	**† TI (965)**	
	SN54LS24	**† TI (928)**	
	SN74LS132	**TI (965)**	
	SN74LS24	**TI (928)**	45
TTL-S	54S132	† Fairchild	
	74S132	Fairchild	
	SN54S132	**† TI (965)**	
	SN74S132	**TI (965)**	
Hex Current Sensing Interface Gate			
TTL-LS	**SN54LS63**	**† TI (941)**	50
	SN74LS63	**TI (941)**	
Hex Schmitt Trigger, Inverting			
TTL	5414	† Fairchild	
	7414	Fairchild	
	HD7414	Hitachi	
	MC7414	Motorola	55
	DM5414	† National	

(Continued)

Function	Device	Source	Line
Hex Schmitt Trigger, Inverting			
TTL		(Cont'd)	
	DM7414	National	
	5414	**† Signetics (860)**	
	7414	**Signetics (860)**	
	SN5414	**† TI (924)**	60
	SN7414	**TI (924)**	
TTL-ALS	**SN54ALS14**	**† Motorola (822)**	
	SN74ALS14	**Motorola (822)**	
TTL-F	**74F14**	**Signetics (879)**	
TTL-LS	54LS14	† Fairchild	65
	74LS14	Fairchild	
	HD74LS14	Hitachi	
	M74LS14	Mitsubishi	
	SN54LS14	† Motorola	
	SN74LS14	Motorola	70
	DM54LS14	† National	
	DM74LS14	National	
	DN74LS14	**Panasonic (826,834)**	
	54LS14	† SGS	
	74LS14	SGS	75
	54LS14	**† Signetics (529)**	
	74LS14	Signetics	
	SN54LS14	**† TI (924)**	
	SN54LS19	**† TI (926)**	
	SN74LS14	**TI (924)**	80
	SN74LS19	**TI (926)**	
Decade Sequencer (sequential 1 of 10 decoder), Adjustable Sequence Length			
TTL	9320C	Fairchild	
3-2-2-3-Input AND-OR Expander (for H50, H53, H55)			
TTL-H	54H62	† Fairchild	
	74H62	Fairchild	
	DM54H62	† National	85
	DM74H62	National	
	SN54H62	**† TI (941)**	
	SN74H62	**TI (941)**	
4-Bit Parallel Bus Transceiver, Inverting Three-State			
TTL-S	HD268T26	Hitachi	
	MC8T26A	Motorola	90
	DS8T26A	National	
	DS8T26AM	† National	
	N8T127	**Signetics (876)**	
	N8T26A	**Signetics (876)**	
	S8T126	**† Signetics (876)**	95
	S8T127	**† Signetics (876)**	
	S8T26A	**† Signetics (876)**	
	N8T26	TI	
	N8T26A	TI	
	SN75136	TI	100
4-Bit Parallel Bus Transceiver, Non-Inverting, Three-State			
TTL-S	N8T28	AMD	
	MC6889	Motorola	
	MC8T28	Motorola	
	DS8T28	National	
	DS8T28M	† National	105
	N8T128	**Signetics (876)**	
	N8T129	**Signetics (876)**	
	N8T28	**Signetics (876)**	
	S8T128	**† Signetics (876)**	
	S8T129	**† Signetics (876)**	110
	S8T28	**† Signetics (876)**	
4-Bit Parallel Bus Transceiver, Open Collector Drivers			
TTL-S	AM25S11C	AMD	
	AM25S12AC	AMD	
	AM25S12AM	† AMD	
	AM25S12M	† AMD	115
	AM26S10C	AMD	
	AM26S10M	† AMD	
	AM26S11M	† AMD	
	AM26S12C	AMD	

(Continued)

Function	Device	Source	Line
4-Bit Parallel Bus Transceiver, Open Collector Drivers			
TTL-S		(Cont'd)	
	9640C	Fairchild	120
	9640M	† Fairchild	
	9641M	† Fairchild	
	MC26S10	Motorola	
	MC26S11	Motorola	
	DS26S10C	National	125
	DS26S10M	† National	
	DS26S11C	National	
	DS26S11M	† National	
	AM	† TI	
	AM26S10C	† TI	130
	AM26S10M	† TI	
	AM26S11C	TI	
4-Bit Parallel Universal Bus Transceiver, Storage, Three-State			
TTL-S	**SN54S226**	**† TI (996)**	
	SN74S226	**TI (996)**	
4-Bit Priority Register, Cascadable			
TTL	**SN54278**	**† TI (1009)**	135
	SN74278	**TI (1009)**	
4-Bit Shifter (shifts data 0, 1, 2, or 3 places as determined by 2-bit selector code)			
TTL-F	MC54F350	† Motorola	
	MC74F350	Motorola	
	74F350	**Signetics (879)**	
TTL-S	SN54S350	† AMD	140
	SN74S350	AMD	
	54S350	† Signetics	
	74S350	Signetics	
4-Bit Shifter, Three-State (shifts 0, 1, 2, or 3-bits under 2-line select control)			
TTL-F	54F510	† Fairchild	
	74F510	Fairchild	145
TTL-S	**AM25S10C**	**AMD (1427)**	
	AM25S10M	**† AMD (1427)**	
	N25S10	Signetics	
4-Bit True/Complement Zero/One Element			
TTL-H	54H87	† Fairchild	
	74H87	Fairchild	150
	MC54H87	† Motorola	
	MC74H87	Motorola	
	SN54H87	**† TI (951)**	
	SN74H87	**TI (951)**	
4-Bit Universal Presettable Polynomial Generator			
TTL	MC8504	Motorola	155
6-Bit Synchronous Binary Rate Multiplier			
TTL	5497	† Fairchild	
	7497	Fairchild	
	MC7497	Motorola	
	SN5497	**† TI (954)**	
	SN7497	**TI (954)**	160
8-Bit Bidirection I/O Port			
TTL-S	N8T31	Signetics	
	N8X31	Signetics	
8-Bit Bidirectional I/O Port, Latched, Addressable			
TTL-S	N8T32	Signetics	
	N8T33	Signetics	
	N8T35	Signetics	165
	N8T36	Signetics	
	N8T39	Signetics	
	N8X32	Signetics	
	N8X36	Signetics	
	S8T32	† Signetics	170
	S8T33	† Signetics	
	S8T35	† Signetics	
	S8T36	† Signetics	
	S8T39	† Signetics	

† Military Temperature Range (−55° to 125°C)

* Typical Value

Bold face indicates additional data is provided on the page noted.

© IC MASTER 1984

DIGITAL–TTL (Cont'd)

Miscellaneous (Cont'd)

Function	Device	Source		Line
8-Bit Parallel Error Detection and Correction Circuit				
TTL-ALS	SN54ALS636	† TI		
	SN54ALS637	† TI		
	SN74ALS636	TI		
	SN74ALS637	TI		
8-Bit Parity Tree				
TTL	MC4008	Motorola		5
	MC4308	† Motorola		
	MC74408	Motorola		
8-Bit Position Scaler (The output is shifted with respect to the input up to 8 positions as determined by a 3-bit selector code.)				
TTL	RC8243	Raytheon		
	RM8243	† Raytheon		
8-Bit Successive Approximation Register				
TTL	AM2502C	AMD		10
	AM2502M	† AMD		
	AM2503C	AMD		
	AM2503M	† AMD		
	AM2502	Intersil		
	AM2503	Intersil		15
	AM25L02	Intersil		
	AM25L03	Intersil		
	DM2502C	National		
	DM2502M	† National		
	DM2503C	National		20
	DM2503M	† National		
TTL-LS	54LS503	† Fairchild		
	74LS502	Fairchild		
	74LS503	Fairchild		
8-Bit Universal Transceiver/Port Controller				
TTL-AS	**SN54AS877**	**† TI**	**(1107)**	25
	SN74AS877	**TI**	**(1107)**	
8-Input Priority Encoder				
TTL	9318C	Fairchild		
	9318M	† Fairchild		
	HD74148	Hitachi		
	MC8318	Motorola		30
	MC9318	† Motorola		
	DM54148	† National		
	DM74148	National		
	DM8318	National		
	DM9318	† National		35
	54148	**† Signetics**	**(861)**	
	74148	**Signetics**	**(861)**	
	SN29318	TI		
	SN39318	† TI		
	SN54148	**† TI**	**(971)**	40
	SN74148	**TI**	**(971)**	
TTL-F	54F148	† Fairchild		
	74F148	Fairchild		
	74F148	**Signetics**	**(879)**	
TTL-LS	**AM25LS2513C**	**AMD**	**(1427)**	45
	AM25LS2513M	**† AMD**	**(1427)**	
	AM2913C	**AMD**	**(1409)**	
	AM2913M	**† AMD**	**(1409)**	
	HD74LS148	Hitachi		
	SN54LS148	† Motorola		50
	SN54LS348	† Motorola		
	SN74LS148	Motorola		
	SN74LS348	Motorola		
	SN54LS148	**† TI**	**(971)**	
	SN54LS348	**† TI**	**(1019)**	55
	SN74LS148	**TI**	**(971)**	
	SN74LS348	**TI**	**(1019)**	
TTL-S	**SN54S148**	**† NMI**	**(819)**	
	SN74S148	**† NMI**	**(819)**	
	SN74S348	**NMI**	**(819)**	60
	SN54S148	† Motorola		
	SN54S348	† Motorola		

Function	Device	Source		Line
8-Input to Three-Line Priority Encoder, Three State				
TTL-LS	SN54LS848	† Motorola		
	SN74LS848	Motorola		
9-Bit Odd/Even Parity Generator/Checker				
TTL	54180	† Fairchild		65
	74180	Fairchild		
	ZN54180	† Ferranti		
	ZN74180	Ferranti		
	HD74180	Hitachi		
	MC74180	Motorola		70
	DM54180	† National		
	DM74180	National		
	RC8262	Raytheon		
	RM8262	† Raytheon		
	54180	**† Signetics**	**(528,861)**	75
	74180	**Signetics**	**(861)**	
	N8262	**Signetics**	**(876)**	
	S8262	† Signetics		
	SN54180	**† TI**	**(985)**	
	SN74180	**TI**	**(985)**	80
TTL-AS	**SN54AS280**	**† TI**	**(1009)**	
	SN74AS280	**TI**	**(1009)**	
TTL-F	54F280	† Fairchild		
	74F280	Fairchild		
	MC54F280	**† Motorola**	**(822)**	85
	MC74F280	**Motorola**	**(822)**	
	54F280	† Signetics		
	74F280	Signetics		
	74F280A	**Signetics**	**(879,884)**	
TTL-LS	HD74LS280	Hitachi		90
	SN54LS280	† Motorola		
	SN74LS280	Motorola		
	SN54LS280	**† TI**	**(1009)**	
	SN74LS280	**TI**	**(1009)**	
TTL-S	**AM82S62C**	**AMD**	**(1427)**	95
	AM82S62M	**† AMD**	**(1427)**	
	54S280	† Fairchild		
	93S62C	Fairchild		
	93S62M	† Fairchild		
	HD74S280	Hitachi		100
	DM54S280	† National		
	DM74S280	National		
	54S280	† Signetics		
	74S280	Signetics		
	N82S62	**Signetics**	**(876)**	105
	SN54S280	**† TI**	**(1009)**	
	SN74S280	**TI**	**(1009)**	
9-Bit Parity Generator/Checker				
TTL	DM7220	† National		
	DM8220	National		
9-Bit Parity Generator/Checker with Parity I/O Port				
TTL-AS	**SN54AS286**	**† TI**	**(1012)**	110
	SN74AS286	**TI**	**(1012)**	
10-Bit Priority Encoder				
TTL	HD74147	Hitachi		
	DM54147	† National		
	DM74147	National		
	54147	**† Signetics**	**(861)**	115
	74147	**Signetics**	**(861)**	
	SN54147	**† TI**	**(970)**	
	SN74147	**TI**	**(970)**	
TTL-LS	SN54LS147	† Motorola		
	SN74LS147	Motorola		120
	SN54LS147	**† TI**	**(970)**	
	SN74LS147	**TI**	**(970)**	
12-Bit Successive Approximation Register				
TTL	AM2504C	AMD		
	AM2504M	† AMD		
	AM2504	Intersil		125

(Continued)

Function	Device	Source		Line
12-Bit Successive Approximation Register				
TTL			(Cont'd)	
	AM25L04	Intersil		
	DM2504C	National		
	DM2504M	† National		
12-Input Odd/Even Parity Checker/Generator				
TTL	9348C	Fairchild		
	9348M	† Fairchild		130
TTL-S	**AM93S48C**	**AMD**	**(1427)**	
	AM93S48M	**† AMD**	**(1427)**	
16-Stage Programmable Counter/Divider				
	54F525	† Fairchild		
	74F525	Fairchild		
32-Bit Parallel Error Detection and Correction Circuit				
TTL-ALS	**SN54ALS635**	**† TI**	**(374,1071)**	135
	SN74ALS632	**TI**	**(374,1070)**	
	SN74ALS633	**TI**	**(374,1070)**	
	SN74ALS634	**TI**	**(374,1071)**	
	SN74ALS635	**TI**	**(374,1071)**	
32-Bit Parallel Error Detection and Correction Circuit, See also Interface, Error Checking Circuit.				
TTL-ALS	**SN54ALS632**	**† TI**	**(1070,374)**	140
	SN54ALS633	**† TI**	**(374,1070)**	
	SN54ALS634	**† TI**	**(374,1071)**	
50-1 Frequency Divider				
TTL-LS	**SN54LS56**	**† TI**	**(939)**	
	SN74LS56	**TI**	**(939)**	
60-1 Frequency Divider				
TTL-LS	**SN54LS57**	**† TI**	**(940)**	145
	SN74LS57	**TI**	**(940)**	

† Military Temperature Range (−55° to 125°C)

* Typical Value

Bold face indicates additional data is provided on the page noted.

DIGITAL–SPECIAL

Other Digital Devices

Function	Device	Source	Line
Arithmetic Processor (supply 5-12 V)			
	AM9511A	**AMD**	**(1440)**
	AM9511A-5	**AMD**	**(1440)**
Baud Rate Generator/Programmable Divider, Dual (ROM controlled divider)			
	COM5016	SMC	
	COM5016T	SMC	
	COM5036	SMC	5
	COM5036T	SMC	
	COM8116	SMC	
	COM8116T	SMC	
	COM8136	SMC	
	COM8136T	SMC	10
	BR1941	Western	
	WD1943	Western	
Baud Rate Generator/Programmable Divider (ROM controlled divider)			
	MM5307	National	
	COM5026	SMC	
	COM5026T	SMC	15
	COM5046	SMC	
	COM5046T	SMC	
	COM8046	SMC	
	COM8046T	SMC	
	COM8126	SMC	20
	COM8126T	SMC	
	COM8146	SMC	
	COM8146T	SMC	
Bidirectional Interface Circuit, High Voltage			
	TEA1512	Thomson-CSF	
Calculators: See Linear-Consumer			25
Comparator/Mux, 6 Decade, 7 Level, Latched and Multiplexed Output (use with 6 decade counter)			
	LS7240	**LSIComp**	**(803)**
Correlator (continually compares two independently clocked serial inputs and gives correlation output)			
	TDC1004	† TRW-LSI	
	TDC1023	**† TRW-LSI**	**(1159)**
Counter/Display Decoder, 4 Decade (7 segment and BCD outputs, 0.25 MHz			
	MK5002	Mostek	
	MK5005	Mostek	30
	MK5007	Mostek	
Counter/Display Driver, 1 Decade Up/Down, Preset (7 segment and BCD output, 1 MHz)			
	HCTR0107	Hughes	
Counter/Display Driver, 6 Decade Up/Down (7 segment and BCD output, 1 MHz, presettable compare register, latched output, LED drive maximum count 999999, 995959, or 595999 versions supply 10-15 V)			
	MK50395	Mostek	
	MK50396	Mostek	
	MK50397	Mostek	35
	MK50398	Mostek	
	MK50399	Mostek	
Counter/Timer (includes two 4-digit counters, capacitor, oscillator and divider)			
	MM5865	National	
Counter/Timer, 4 Digit Up/Down Presettable Counter/Timer, Settable Register with Comparison to Counter, Multiplexed 7-Segment and BCD Output (maximum count 5959)	**ICM7217B**	**Intersil**	**(782)**
Counter/Timer, 4 Digit Up/Down Presettable Counter/Timer, Settable Register with Comparison to Counter, Multiplexed 7-Segment, and BCD Output (maximum count 5959)	**ICM7217C**	**Intersil**	**(782)** 40
Counter/Timer, 4 Digit Up/Down Presettable Counter/Timer, Settable Register with Comparison to Counter, Multiplexed 7-Segment and BCD Output (maximum count 5959)	**ICM7227B**	**Intersil**	**(782)**
Counter/Timer, 4-Digit Up/Down Presettable Counter/Timer, Settable Register with Comparison to Counter, Multiplexed 7-Segment and BCD Output (maximum count 5959)	**ICM7227C**	**Intersil**	**(782)**
Counter Time-Base (oscillator, programmable divider, 10^1 to 10^8, 2x1037, 6x1037, 6x10^8 and 36x10^8, supply -12,5 V)	MK5009	Mostek	
Counter, Universal (8 decade)/Latch/Display Driver (direct 7 segment and digit drivers for common anode LEDs: 'A' types	**ICM7216A**	**Intersil**	**(781)**
	ICM7216B	**Intersil**	**(781)** 45
	ICM7226A	**Intersil**	**(796)**
	ICM7226B	**Intersil**	**(796)**
Counter, Up/Down, 4-Digit	MN6031	Panasonic	
Counter, Dual (two 3-decade up/down counters with latch, BCD output, 0.5 MHz, supply 5-15 V)	**LS7040**	**LSIComp**	**(803)**
Counter, Dual 16-Bit Binary Up Counter with 32-Bit Latch, Multiplexer and Three-State Drivers	**LS7062**	**LSIComp**	**(803)** 50
Counter, 5 Decade (includes storage, multiplexed BCD output, 0.6 MHz, supply -12,5 V)	3815	Fairchild	
Counter, 6 Decade Up/Down (predetermining, 3 pre-set storage registers, latched output)	**LS7050**	**LSIComp**	**(803)**
	LS7055/56	**LSIComp**	**(803)**
Counter, 6 Decade, BCD Output, 5 MHz, 8 Latches (supply 5-15 V)	**LS7031**	**LSIComp**	**(803)**
Counter, 8 Decade Frequency Counter/Latch/Display Driver (Direct 7 segment and digit drivers for common anode LEDs: 7216C. common cathode LEDs: 7216D. DC to 10 MHz, 5 V supply)	**ICM7216C**	**Intersil**	**(781)** 55
	ICM7216D	**Intersil**	**(781)**
Counter, 8 Decade, BCD and 7 Segment Outputs, 5 MHz, Latches (supply 5-15 V)	**LS7030**	**LSIComp**	**(803)**
Counter, 8-Bit, Programmable	MN8025	Panasonic	
Counter, 16-Bit, Non-Volatile Storage, Parallel Input/Output, 500 KHz (supply -29,5 V)	NCR2900	NCR	
Counter, 32-Bit, Multiplexed and Latched Outputs (5 V supply)	**LS7060**	**LSIComp**	**(803)** 60
Counter, 32-Bit, 8-Bit Prescalable, Multiplexed and Latched Outputs (5 V supply)	**LS7061**	**LSIComp**	**(803)**
Counters-See also CMOS and TTL-Counters			
Data Encryption Device (NBS standard)	WD2001	Western	
	WD2002	Western	
Data Security Device (data encryption standard)	**MC6859**	**Motorola**	**(1505)** 65
Digital Gain Set, for setting gain of op-amps	**LF13006**	**National**	**(3538)**
	LF13007	**National**	**(3538)**
Divider, Adjustable, for 500 MHz	S89	Siemens	
Divider, Divide by 1, 10, 100, 1000	SAJ141	Siemens	
Divider, Divide by 2, Above 1 GHz	SP8606B	Plessey	70
	SP8606M	Plessey	
Divider, Divide by 2, to 2 GHz, ECL Output	U622BS	Telefunken	
Divider, Divide by 2, 0.2 to 1 GHz			
	SP8602A	† Plessey	
	SP8602B	Plessey	
	SP8605B	Plessey	75
	SP8605M	Plessey	
	SP8607A	† Plessey	
	SP8607B	Plessey	
Divider, Divide by 2, 525, Supply -12 V	MN115P	Panasonic	
Divider, Divide by 2, 625, Supply -12 V	MN116P	Panasonic	80
Divider, Divide by 3/4, 40 to 300 MHz	SP8720	Plessey	
Divider, Divide by 3/4/8/12/16	AN6811	Panasonic	
Divider, Divide by 4, 0.07 to 1 GHz			
	SP8613	Plessey	
	SA1034	Signetics	
	SA1534	Signetics	85
Divider, Divide by 4, 0.1 to 1.5 GHz	S1534	Signetics	
Divider, Divide by 4, 0.15 to 1 GHz			
	SP8600A	† Plessey	
	SP8600B	Plessey	
Divider, Divide by 5/6, to 1 MHz	RED5/6	LSIComp	
Divider, Divide by 5/6, 0.2 to 1 GHz			
	MC12009	Motorola	90
	MC12509	† Motorola	
	SP8740A	† Plessey	
	SP8740B	Plessey	
Divider, Divide by 6/7, 0.2 to 1 GHz			
	SP8741A	† Plessey	
	SP8741B	Plessey	95
Divider, Divide by 8, 0.25 to 1 GHz	SP8735B	Plessey	
Divider, Divide by 8/9, 0.25 to 1 GHz			
	MC12011	Motorola	
	MC12511	† Motorola	
	SP8743B	Plessey	
	SP8743M	Plessey	100
Divider, Divide by 10, Above 1 GHz			
	SP8665B	Plessey	
	SP8668B	Plessey	
Divider, Divide by 10, 0.2 to 1 GHz			
	SP8630A	† Plessey	
	SP8630B	Plessey	
Divider, Divide by 10/100/1000/10,000 to 2 MHz	RDD104	LSIComp	105
Divider, Divide by 10/11, 0.2 to 1 GHz			
	MC12013	Motorola	
	MC12513	† Motorola	
	SP8643B	Plessey	
	SP8647A	† Plessey	
	SP8647B	Plessey	110
	SP8680A	† Plessey	
	SP8680B	Plessey	
	SP8685A	† Plessey	
	SP8685B	Plessey	
	SP8690A	† Plessey	115
	SP8690B	Plessey	
Divider, Divide by 16, 0.2 to 1 GHz			
	SP8659A	† Plessey	
	SP8659B	Plessey	
Divider, Divide by 20, 0.2 to 1 GHz			
	DS8628	National	
	AN6820	Panasonic	120
	AN6821	Panasonic	
	SP8657A	† Plessey	

(Continued)

† Military Temperature Range (−55° to 125°C)

* Typical Value

Bold face indicates additional data is provided on the page noted.

© IC MASTER 1984

DIGITAL–SPECIAL (Cont'd)

Other Digital Devices (Cont'd)

Function	Device	Source	Line
Divider, Divide by 20, 0.2 to 1 GHz (Cont'd)			
	SP8657B	Plessey	
	SP8658	Plessey	
Divider, Divide by 20/21, to 225 MHz			
	DS8614	National	
Divider, Divide by 24, 0.2 GHz			
	DS8627	National	
Divider, Divide by 32, 0.2 to 1 GHz			
	SP8655A	† Plessey	5
	SP8655B	Plessey	
Divider, Divide by 32/33, to 225 MHz			
	DS8615	National	
Divider, Divide by 40, to 120 MHz			
	DS8626	National	
Divider, Divide by 40/41, to 225 MHz			
	DS8616	National	
Divider, Divide by 50/60, to 1 MHz			
	RED50/60	**LSIComp (803)**	10
Divider, Divide by 64, above 1 GHz			
	SP8755A	† Plessey	
	SP8755B	Plessey	
	U264	Telefunken	
Divider, Divide by 64, 0.03 to 1 GHz, ECL Output			
	U664B	Telefunken	
	U664BS	Telefunken	15
Divider, Divide by 64, 0.03 to 1.2 GHz, ECL Output			
	U624BS	Telefunken	
Divider, Divide by 64, 0.08 to 1 GHz			
	S0436	Siemens	
	SDA2001	Siemens	
Divider, Divide by 64, 1 GHz			
	SAB1164	Signetics	
Divider, Divide by 64/256, 90-1000 MHz			
	MC12071	Motorola	20
	DS8621	National	
	CA3163	RCA	
	CA3179	**RCA (3603)**	
Divider, Divide by 64/65, to 225 MHz			
	DS8617	National	
Divider, Divide by 100, to 150 MHz			
	DS8629	National	25
	SP8629	Plessey	
Divider, Divide by 100/120			
	RED100/120	**LSIComp (803)**	
Divider, Divide by 126/128 (VHF) or 252/256 (UHF)			
	DS8622	National	
Divider, Divide by 239,240,255,256, to 0.5 GHz			
	SP8906	Plessey	
Divider, Divide by 248/256, to 1 GHz			
	SAB1077	Signetics	30
Divider, Divide by 256, above 1 GHz			
	U266	Telefunken	
Divider, Divide by 256, 0.03 to 1 GHz, ECL Output			
	U666B	Telefunken	
	U666BS	Telefunken	
Divider, Divide by 256, 0.03 to 1 GHz, TTL Output			
	U666BST	Telefunken	
Divider, Divide by 256, 0.03 to 1.2 GHz, ECL Output			
	U626BS	Telefunken	35
Divider, Divide by 256, 0.03 to 1.3 GHz, ECL Output			
	U636BS	Telefunken	
Divider, Divide by 256, 0.03 to 1.5 GHz, ECL Output			
	U656BS	Telefunken	
Divider, Divide by 256, 0.2 to 1 GHz			
	SAB1018	Signetics	
	SAB1018A	Signetics	
Divider, Divide by 256, 1 GHz			
	SAB1256	Signetics	40
Divider, Divide by 300/360			
	RED300/360	**LSIComp (803)**	
Divider, Divide by 478,480,510,512, to 1 GHz			
	SP8901	Plessey	
Divider, Divide by 960/1024, above 1 GHz			
	U265	Telefunken	
	U465	Telefunken	
Divider, Divide by 960/1024, 0.03 to 1 GHz, TTL Output			
	U665B	Telefunken	45
Divider, Divide by 1000, 0-25 KHz (supply -15 V)			
	SAJ135	Siemens	
Divider, Divide by 3000/3600			
	RED3000/3600	**LSIComp (803)**	
Divider, Divide by 4096, 0.03 to 1 GHz, TTL Output			
	U496BS	Telefunken	
Divider Extender, Divide by 4, to Extend Division Ratios of Two Modulus Counters while Maintaining the Difference (i.e., 5/6 to 20/21)			
	SP8790A	† Plessey	
	SP8790B	Plessey	50
Divider Extender, Divide by 8 (i.e., extends 5/6 to 40/41)			
	SP8794A	† Plessey	
	SP8794B	Plessey	
DVM Logic: See also Interface-Analog to Digital Converters, Decimal Output			
DVM Logic, 4 Digits (supply -17 V)			
	MN6032	Panasonic	
DVM Logic, 4-1/2 Decade (multiplexed BCD output			
	3814	Fairchild	55
Elapsed Time Counter, Decimal (7 segment and digit driver for common cathode LEDs			
	ICM7045A	Intersil	
Elapsed Time Counter, 6 Decade (7 segment and digit drivers for common cathode LEDs			
	ICM7215	Intersil	
Elapsed Time Counter, 8 Decade (7 segment and digit drivers for common cathode LED			
	ICM7045	Intersil	
Filter, Finite Impulse Response			
	TDC1028	**† TRW-LSI (1160)**	
Frequency Synthesizers: See Linear-Phase Locked Loop Circuits			60
Frequency to Voltage: See Linear-Other Devices			
Hall Effect Switch (senses magnetic field)			
	DN6835	**Panasonic (3558)**	
	DN6837	**Panasonic (3558)**	
	DN6838	**Panasonic (3558)**	
	DN6839	**Panasonic (3558)**	65
	DN834	**Panasonic (3558)**	
	DN835	**Panasonic (3558)**	
	DN837	**Panasonic (3558)**	
	DN838	**Panasonic (3558)**	
	DN839	**Panasonic (3558)**	70
	SAS231L	Siemens	
	SAS241	Siemens	
	SAS251	Siemens	
	SAS261	Siemens	
	UGN-3013T	Sprague	75
	UGN-3019	Sprague	
	UGN-3020	Sprague	
	UGN-3030	Sprague	
	UGN-3040T	Sprague	
	UGN-3201M	Sprague	80
	UGN-3203M	Sprague	
	UGN-3220S	Sprague	
	UGN-3501	Sprague	
	UGS-3019	† Sprague	
	UGS-3020	† Sprague	85
		(Continued)	
Hall Effect Switch (senses magnetic field) (Cont'd)			
	UGS-3030	† Sprague	
	TL170	TI	
	TL172	TI	
Inverter, Triple PMOS			
	LM8942	Sanyo	
Keyboard Interface, Serial (96 or 144 key)			
	MM57499	National	90
LED Driver System, 8 Decade 8x8 Memory, Decoder (versions either hardwire or processor controlled			
	~~**ICM7218A**~~	~~**Intersil (786)**~~	
	ICM7218B	**Intersil (786)**	
	ICM7218C	**Intersil (786)**	
	ICM7218D	**Intersil (786)**	
	ICM7218E	**Intersil (786)**	95
Multiplexer/Demultiplexer, 8-Channel Latched, Binary Addressable (supply -5 to -70 V)			
	LS7110	**LSIComp (803)**	
Multiplier (16x16)			
	WTL1016	Weitek	
	WTL1516	Weitek	
	WTL1517	Weitek	
PIN Diode Drivers			
	DH0035	† National	100
	DH0035C	National	
	UDS-5790H	† Sprague	
	UDS-5791H	† Sprague	
Programmable Diode Matrix, 4x10			
	HM0410	Harris	
Programmable Diode Matrix, 6x8			
	HM0168	Harris	105
Programmable Diode Matrix, 8x6			
	HM0186	Harris	
Programmable Diode Matrix, 9x8			
	HM0198	Harris	
Programmable Diode Matrix, 10x16			
	S353	Siemens	
Programmable Diode Matrix, 10x4			
	HM0104	Harris	
Programmable Divider			
	HEF4751	**Signetics (865.899)**	110
Programmable Divider (any modulo from 3 to 262,145, supply -12,5)	3816	Fairchild	
Programmable Divider (divide by 2 to 8191)			
	S0437	Siemens	
Regulators, Switching: See Linear-Other Devices			
Schmitt Trigger, Programmable			
	CA3098	**† RCA (3599)**	
	CA3099	**† RCA (3599)**	115
Schmitt Trigger (supply 8 to 16 V)			
	LB8015	Sanyo	
Schmitt Trigger, Zener Clamped Output (supply 2.2 to 6 V)			
	CS102	Cherry	
Schmitt Trigger, Dual, Complementary Open Collector Outputs (supply 2.2 to 6 V)			
	CS122	Cherry	
Schmitt Trigger, Dual, Low Voltage			
	SN76811	TI	
Schmitt Trigger, Dual, 5 to 40 V Output			
	MK111	AnalogSys	120
Schmitt Trigger, Hex			
	AN605	Panasonic	

† Military Temperature Range (−55° to 125°C)

* Typical Value

Bold face indicates additional data is provided on the page noted.

ABBREVIATIONS OF COMPANY NAMES

Action Ins	Action Instruments
AD	Analog Devices
ADT	Advanced Digital Technology
Advent	Advent Products, Inc.
Alphatron	Alphatron
AMA	American Automation
AMD	Advanced Micro Devices
AMI	American Microsystems, Inc.
Amperex	Amperex Electronic Corp.
Analogic	Analogic
Analog Sys	Analog Systems
APC	Applied Micro Circuits
Apex	Apex Microtechnology
APM	Applied Microsystems Corp.
Appl Sys	Applied Systems Corp.
APT	Applied Microtechnology
Aptek	Aptek Microsystems
Array Tech	Array Technology
AWI	AWI Electronics
Barvon	Barvon Research
Bedford	Bedford Computer Systems Inc.
Burr-Brown	Burr-Brown
CAE	Computer Aided Engineering
Cal Devices	California Devices
Cermetek	Cermetek
CGRS	CGRS Microtech Inc.
Cherry	Cherry Semiconductor
CIC	Custom Integrated Circuits
CirTech	Circuit Technology
Citel	Citel
Comlinear	Comlinear Corporation
CMA	Custom MOS Arrays
Comark	Comark Corp.
Comdial	Comdial Semiconductor
Comp Auto	Computer Automation
Compas	Compas Microsystems
Cont Logic	Control Logic Inc.
Control Sys	Control Systems Microsystems Div.
CreMicro	Creative Micro Systems
Cromemco	Cromemco, Inc.
Cubit	Cubit Inc.
Curtis	Curtis Electro Devices, Inc.
Cybernetic	Cybernetic Micro Systems
Cybersys	Cybersystems
Cybertek	Cybertek Inc.
Data General	Data General
Data I/O	Data I/O
Data Trans	Data Translation
Datel	Datel
Datricon	Datricon Corporation
DDC	Data Devices Corporation
DEC	Digital Equipment Corporation
Die-Tech	Die-Tech
Digelec	Digelec Corp.
Digitek	Digitek, Inc.
Dionics	Dionics Inc.
Dist Comp	Distributed Computer Systems
Divers Tech	Diversified Technology
E-HI	E-H International, Inc.
EDI	Electronic Designs Inc.
Elind	Elind Elettronica Industriale
EMM-SESCO	EEM-SESCO
Emulogic	Emulogic Inc.
ETI Micro	ETI Micro
Exar	Exar Integrated Systems
Exel	Exel Microelectronics
Fairchild	Fairchild
Ferranti	Ferranti Electric
Force	Force Computers
Fujitsu A	Fujitsu America
Fujitsu	Fujitsu Microelectronics, Inc.
GI	General Instrument
GTE Micro	GTE Microcircuits
Harris	Harris Semiconductor
Heurikon	Heurikon Corp.
Hilevel	Hilevel Technology, Inc.
Hitachi	Hitachi America, Ltd.
Holt	Holt Inc.
HP	Hewlett-Packard
Hughes	Hughes Aircraft, Solid State Products
Hybrid Sys	Hybrid Systems
HyComp	HyComp
ICC	International Cybernetics
IDT	Integrated Device Technology
IMI	International Microcircuits, Inc.
IMP	International Microelectronic Products
IMS	Industrial MicroSystems Inc.
Infosphere	Infosphere
Inmos	Inmos
IntCirEng	Integrated Circuit Engineering
IntCirSys	Integrated Circuit Systems
IntCompSys	Integrated Computer Systems
Int Tech	Integrated Technology Corp.
Intech	Intech Microcircuits Div.
Intel	Intel
Interdesign	Interdesign
Intersil	Intersil
Intronics	Intronics
ITT	ITT Semiconductors
Kinetic Sys	Kinetic Systems
Kontron	Kontron Electronics
Lambda	Lambda Semiconductor
Linear Tech	Linear Technology
LSI Comp	LSI Computer Systems
LSI Logic	LSI Logic Corporation
Master Logic	Master Logic Corporation
Matrix	Matrix Corp.
Matrox	Matrox Electronic Systems
Maxim	Maxim Integrated Products
MCC	Micro-Computer Control
MCE	MCE Electronics
Micrel	Micrel
Micro Innov	Micro Innovators
Micropac	Micropac Industries
Micro Net	Micro Networks
Micro Pwr	Micro Power Systems
Micro Sci	Micro Sciences Corp.
Micro Tech	Microcircuits Technology
Micro-Link	Micro-Link Corporation
Micron	Micron Technology
MilerTron	MilerTronics
Miller	Miller Technology
Mitel	Mitel Semiconductor
Mitsubishi	Mitsubishi Electronics
MMI	Monolithic Memories, Inc.
Mostek	Monolithic Systems Corp.
Motorola	Mostek
MRC	Motorola Semiconductor
Murray	MRC Systems
Monosil	Murray Consulting
National	National Semiconductor
NCM	NCM Corp.
NCR	NCR Corp., Microelectronics Division
NEC	NEC Electronics
Nitron	Nitron
OAE	Oliver Advanced Engineering
Octagon	Octagon Systems Corp.
OEI	Optical Electronics Inc.
Ohio Sci	Ohio Scientic
OKI	OKI Semiconductor
Omnibyte	Omnibyte Corp.
Onset	Onset Computer Corp.
Panasonic	Panasonic
Pico Design	Pico Design
Polycore	Polycore Electronics
Plessey	Plessey Semiconductors
PMI	Precision Monilithics, Inc.
PragDes	Pragmatic Design Inc.
Pro-Log	Pro-Log Corp.
Quay	Quay Corp.
Raytheon	Raytheon Semiconductor
RCA	RCA Solid State Division
RCI Data	RCI Data
RELMS	Relational Memory Systems
Reticon	Reticon
RIFA	RIFA
Rockwell	Rockwell, Microelectronic Devices
RTC	Riehl Time Corporation
Sanyo	Sanyo
SBE	SBE, Inc.
SEEQ	SEEQ Technology, Inc.
SPI	Semi Processes Inc.
Siemens	Siemens
Si-Fab	Si-Fab
Signetics	Signetics
SGS	SGS Semiconductor
Sharp	Sharp
Silicon G	Silicon General
Siliconix	Siliconix
Silicon Sys	Silicon Systems Inc.
Siltronics	Siltronics
SMC	Standard Microsystems Corp.
S MOS	S MOS Systems
Solarise	Solarise Enterprises
Solitron	Solitron Devices
Sprague	Sprague Electric Company
SSM	Solid State Micro Technology for Music
SSS	Solid State Scientific
Stag	Stag Microsystems
STC	Storage Technology Corp.
STD	STD Microsystems
Struc Des	Structured Design Inc.
Stynetic	Stynetic Systems
Sunrise	Sunrise Electronics
Sunshine	Sunshine Semiconductor
Supertex	Supertex Inc.
Symtek	Symtek Corp.
Synertek	Synertek
Sys Innov	Systems Innovations
Tau Zero	Tau Zero Inc.
Technitrol	Technitrol
Tektronix	Tektronix
Teledyne C	Teledyne Crystalonics
Teledyne P	Teledyne Philbrick
Teledyne S	Teledyne Semiconductor
Telefunken	Telefunken
Telmos	Telmos
Teltone	Teltone Corporation
TI	Texas Instruments
Third Domain	Third Domain
Thomson-CSF	Thomson-CSF Components Corp.
Toshiba	Toshiba America
Trans-Data	Trans-Data
TRW	TRW LSI Products
Unitrode	Unitrode
Universal	Universal Semiconductor, Inc.
Varix	Varix Corp.
VLSI Design	VLSI Design Associates
VTI	VLSI Technology, Inc.
Votrax	Votrax
Weitek	Weitek Corporation
Western	Western Digital
Wintek	Wintek Corp.
Xicor	Xicor, Inc.
Xycom	Xycom
Zendex	Zendex Corp.
Zilog	Zilog
ZyMOS	ZyMOS Corporation
Zytrex	Zytrex Corp.

BIPOLAR LSI AND SUPPORT PRODUCTS
Digital Signal Processing Products

Am25S557/Am25S558 8-Bit by 8-Bit Combinatorial Multiplier

- Multiplies Two 8-Bit Numbers – 16-Bit Output
- Combinatorial – No Clocks Required
- Full 8 x 8 Multiply in 45ns (Typ)
- Cascades to 16 x 16 in 110ns (Typ)
- Expandable to Multiples of Eight Bits
- MSB and $\overline{MSB}$ Outputs for Easy Expansion
- Unsigned, Twos Complement or Mixed Operands
- Implements Common Rounding Algorithms with Additional Logic
- 3-State Outputs
- Transparent 16-Bit Latch in Am25S557
- Industry Standard Pinouts
- 40-Pin DIP

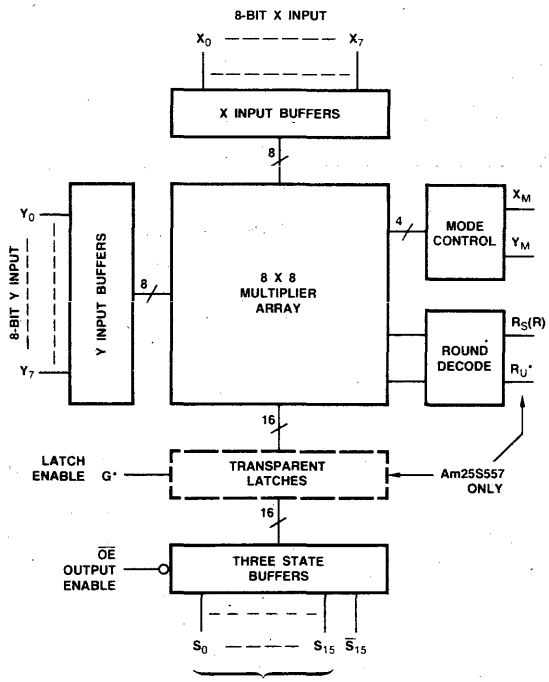

*Pin 11 is G for Am25S557 and R_U for Am25S558.

Am29516/Am29517 16 by 16 Combinatorial Multipliers

- Twos Complement, Unsigned or Mixed Numbers
- LSP Available at Y_{IN} or P_{OUT}
- Am29516 Pin Compatible with TRW MPY-16HJ
- Am29517 Has Single Clock Input with X, Y and P Clock Enables
- Internal ECL Array Provides Multiply Time of 75ns (Typ)
- 64-Pin DIP

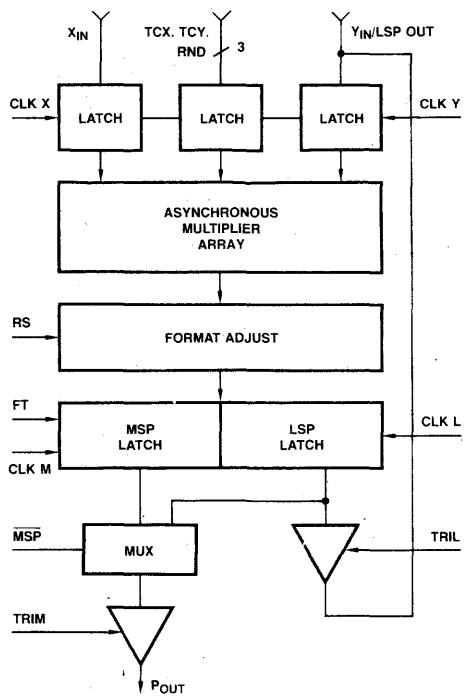

© IC MASTER 1984

BIPOLAR LSI AND SUPPORT PRODUCTS
Digital Signal Processing Products

SUPPORT PRODUCTS

Am29501 Programmable Signal Processor

- 8-Bit Slice
- 8-Bit ALU
- Six 8-Bit Register File
- Designed to Operate with Am29516/Am29517
- 29-Bit Microcode Control
- Multiple Simultaneous Data Moves
- Supports 100ns Microcycle Time
- 64-Pin DIP

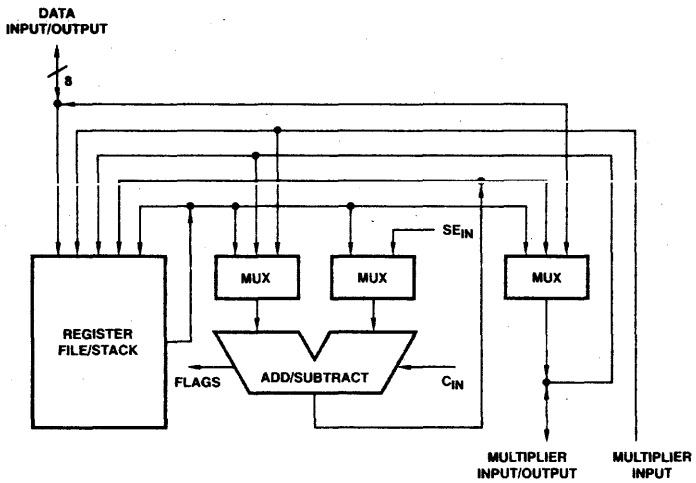

Am29520/Am29521 Multilevel Pipeline Register

- Four 8-Bit Vipeline Registers
- All Registers Mux to Output
- Programmable Pipeline – Dual 2-Stage or Single 4-Stage
- Am29520 Has Separate Load and Shift
- 24-Pin 0.3" Wide DIP

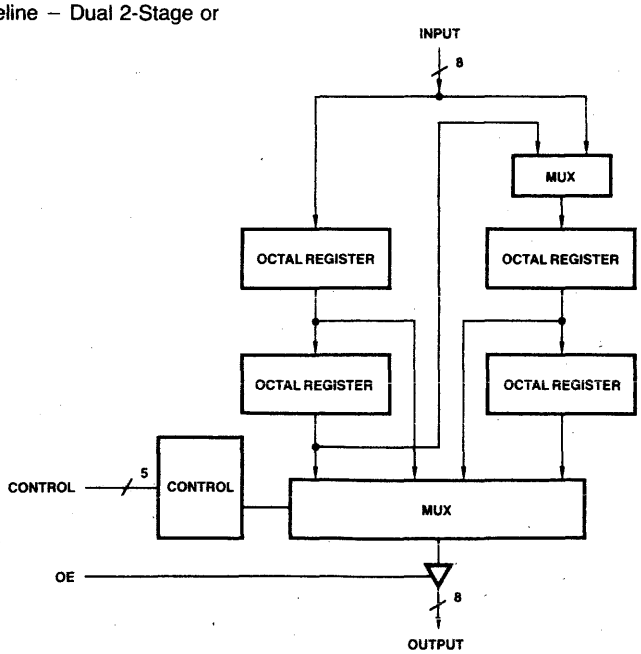

© IC MASTER 1984

BIPOLAR LSI AND SUPPORT PRODUCTS
Digital Signal Processing Products

Am29540 Programmable FFT Address Sequencer

- Generates Data/Coefficient Addresses
- Programmable Length – 2 to 65536 Point Transforms
- DIF or DIT Algorithms
- Bit-Reversed I or O (In-Place)
- Radix-2 or -4 Address Sequence
- Radix-2 RVI Transforms
- 40-Pin DIP

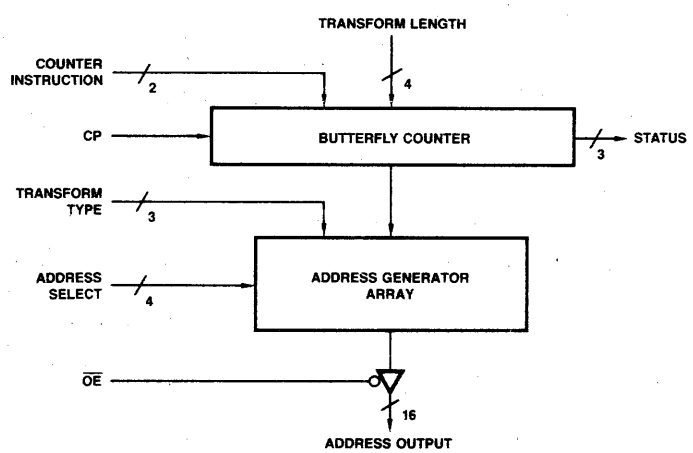

© IC MASTER 1984

ABBREVIATIONS OF COMPANY NAMES

Action Ins	Action Instruments
AD	Analog Devices
ADT	Advanced Digital Technology
Advent	Advent Products, Inc.
Alphatron	Alphatron
AMA	American Automation
AMD	Advanced Micro Devices
AMI	American Microsystems, Inc.
Amperex	Amperex Electronic Corp.
Analogic	Analogic
Analog Sys	Analog Systems
APC	Applied Micro Circuits
Apex	Apex Microtechnology
APM	Applied Microsystems Corp.
Appl Sys	Applied Systems Corp.
APT	Applied Microtechnology
Aptek	Aptek Microsystems
Array Tech	Array Technology
AWI	AWI Electronics
Barvon	Barvon Research
Bedford	Bedford Computer Systems Inc.
Burr-Brown	Burr-Brown
CAE	Computer Aided Engineering
Cal Devices	California Devices
Cermetek	Cermetek
CGRS	CGRS Microtech Inc.
Cherry	Cherry Semiconductor
CIC	Custom Integrated Circuits
CirTech	Circuit Technology
Citel	Citel
Comlinear	Comlinear Corporation
CMA	Custom MOS Arrays
Comark	Comark Corp.
Comdial	Comdial Semiconductor
Comp Auto	Computer Automation
Compas	Compas Microsystems
Cont Logic	Control Logic Inc.
Control Sys	Control Systems Microsystems Div.
CreMicro	Creative Micro Systems
Cromemco	Cromemco, Inc.
Cubit	Cubit Inc.
Curtis	Curtis Electro Devices, Inc.
Cybernetic	Cybernetic Micro Systems
Cybersys	Cybersystems
Cybertek	Cybertek Inc.
Data General	Data General
Data I/O	Data I/O
Data Trans	Data Translation
Datel	Datel
Datricon	Datricon Corporation
DDC	Data Devices Corporation
DEC	Digital Equipment Corporation
Die-Tech	Die-Tech
Digelec	Digelec Corp.
Digitek	Digitek, Inc.
Dionics	Dionics Inc.
Dist Comp	Distributed Computer Systems
Divers Tech	Diversified Technology
E-HI	E-H International, Inc.
EDI	Electronic Designs Inc.
Elind	Elind Elettronica Industriale
EMM-SESCO	EEM-SESCO
Emulogic	Emulogic Inc.
ETI Micro	ETI Micro
Exar	Exar Integrated Systems
Exel	Exel Microelectronics
Fairchild	Fairchild
Ferranti	Ferranti Electric
Force	Force Computers
Fujitsu A	Fujitsu America
Fujitsu	Fujitsu Microelectronics, Inc.
GI	General Instrument
GTE Micro	GTE Microcircuits
Harris	Harris Semiconductor
Heurikon	Heurikon Corp.
Hilevel	Hilevel Technology, Inc.
Hitachi	Hitachi America, Ltd.
Holt	Holt Inc.
HP	Hewlett-Packard
Hughes	Hughes Aircraft, Solid State Products
Hybrid Sys	Hybrid Systems
HyComp	HyComp
ICC	International Cybernetics
IDT	Integrated Device Technology
IMI	International Microcircuits, Inc.
IMP	International Microelectronic Products
IMS	Industrial MicroSystems Inc.
Infosphere	Infosphere
Inmos	Inmos
IntCirEng	Integrated Circuit Engineering
IntCirSys	Integrated Circuit Systems
IntCompSys	Integrated Computer Systems
Int Tech	Integrated Technology Corp.
Intech	Intech Microcircuits Div.
Intel	Intel
Interdesign	Interdesign
Intersil	Intersil
Intronics	Intronics
ITT	ITT Semiconductors
Kinetic Sys	Kinetic Systems
Kontron	Kontron Electronics
Lambda	Lambda Semiconductor
Linear Tech	Linear Technology
LSI Comp	LSI Computer Systems
LSI Logic	LSI Logic Corporation
Master Logic	Master Logic Corporation
Matrix	Matrix Corp.
Matrox	Matrox Electronic Systems
Maxim	Maxim Integrated Products
MCC	Micro-Computer Control
MCE	MCE Electronics
Micrel	Micrel
Micro Innov	Micro Innovators
Micropac	Micropac Industries
Micro Net	Micro Networks
Micro Pwr	Micro Power Systems
Micro Sci	Micro Sciences Corp.
Micro Tech	Microcircuits Technology
Micro-Link	Micro-Link Corporation
Micron	Micron Technology
MilerTron	MilerTronics
Miller	Miller Technology
Mitel	Mitel Semiconductor
Mitsubishi	Mitsubishi Electronics
MMI	Monolithic Memories, Inc.
Mostek	Monolithic Systems Corp.
Motorola	Mostek
MRC	Motorola Semiconductor
Murray	MRC Systems
Monosil	Murray Consulting
National	National Semiconductor
NCM	NCM Corp.
NCR	NCR Corp., Microelectronics Division
NEC	NEC Electronics
Nitron	Nitron
OAE	Oliver Advanced Engineering
Octagon	Octagon Systems Corp.
OEI	Optical Electronics Inc.
Ohio Sci	Ohio Scientic
OKI	OKI Semiconductor
Omnibyte	Omnibyte Corp.
Onset	Onset Computer Corp.
Panasonic	Panasonic
Pico Design	Pico Design
Polycore	Polycore Electronics
Plessey	Plessey Semiconductors
PMI	Precision Monilithics, Inc.
PragDes	Pragmatic Design Inc.
Pro-Log	Pro-Log Corp.
Quay	Quay Corp.
Raytheon	Raytheon Semiconductor
RCA	RCA Solid State Division
RCI Data	RCI Data
RELMS	Relational Memory Systems
Reticon	Reticon
RIFA	RIFA
Rockwell	Rockwell, Microelectronic Devices
RTC	Riehl Time Corporation
Sanyo	Sanyo
SBE	SBE, Inc.
SEEQ	SEEQ Technology, Inc.
SPI	Semi Processes Inc.
Siemens	Siemens
Si-Fab	Si-Fab
Signetics	Signetics
SGS	SGS Semiconductor
Sharp	Sharp
Silicon G	Silicon General
Siliconix	Siliconix
Silicon Sys	Silicon Systems Inc.
Siltronics	Siltronics
SMC	Standard Microsystems Corp.
S MOS	S MOS Systems
Solarise	Solarise Enterprises
Solitron	Solitron Devices
Sprague	Sprague Electric Company
SSM	Solid State Micro Technology for Music
SSS	Solid State Scientific
Stag	Stag Microsystems
STC	Storage Technology Corp.
STD	STD Microsystems
Struc Des	Structured Design Inc.
Stynetic	Stynetic Systems
Sunrise	Sunrise Electronics
Sunshine	Sunshine Semiconductor
Supertex	Supertex Inc.
Symtek	Symtek Corp.
Synertek	Synertek
Sys Innov	Systems Innovations
Tau Zero	Tau Zero Inc.
Technitrol	Technitrol
Tektronix	Tektronix
Teledyne C	Teledyne Crystalonics
Teledyne P	Teledyne Philbrick
Teledyne S	Teledyne Semiconductor
Telefunken	Telefunken
Telmos	Telmos
Teltone	Teltone Corporation
TI	Texas Instruments
Third Domain	Third Domain
Thomson-CSF	Thomson-CSF Components Corp.
Toshiba	Toshiba America
Trans-Data	Trans-Data
TRW	TRW LSI Products
Unitrode	Unitrode
Universal	Universal Semiconductor, Inc.
Varix	Varix Corp.
VLSI Design	VLSI Design Associates
VTI	VLSI Technology, Inc.
Votrax	Votrax
Weitek	Weitek Corporation
Western	Western Digital
Wintek	Wintek Corp.
Xicor	Xicor, Inc.
Xycom	Xycom
Zendex	Zendex Corp.
Zilog	Zilog
ZyMOS	ZyMOS Corporation
Zytrex	Zytrex Corp.

A Subsidiary of Gould Inc.

S4003

AUTO CLOCK

Features

- ☐ 12 Hour, 4 Digit Auto Clock
- ☐ Elapsed Time Counter (resettable, range to 99 hours)
- ☐ Calendar (4-year calendar with pin option for European date/month reversal)
- ☐ Ignition-Sensing Display Cut-off (to reduce battery drain when the auto is not operating)
- ☐ Crystal Input Accuracy (uses inexpensive 4.194mHz crystal)
- ☐ Direct Display Drive (4-digit vacuum fluorescent displays, 24 Volts)

Applications/Markets

- ☐ Automotive
- ☐ Avionics
- ☐ Marine
- ☐ Portable Clocks
- ☐ Industrial

General Description

The S4003 Auto Clock is a PMOS integrated circuit which has found wide application in auto, avionic and marine applications as a portable or dashboard clock and as an industrial timer.

Block Diagram

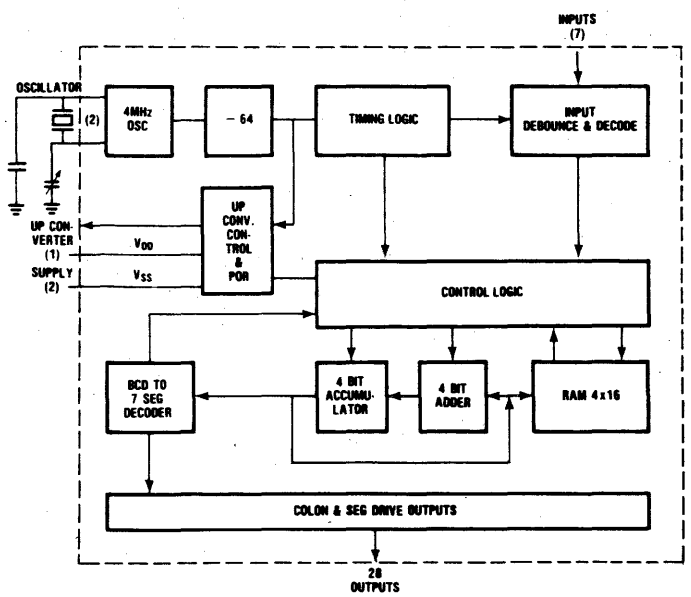

Pin Configuration

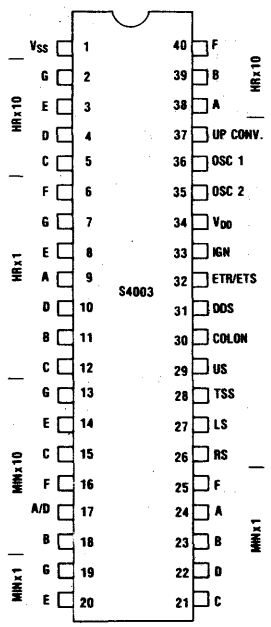

DIGITAL

American Microsystems, Inc.

© IC MASTER 1984

Analog Devices offers a full line of monolithic CMOS TTL compatible high speed low power digital signal components. They are all compatible in form, function and pinout with the equivalent industry standard units, but consumes only about 1/20th the power.

The low power is obtained by using complementary MOS technology. The high speed is achieved by use of three speed-saving techniques. A modified Booth algorithm reduces time consuming operations. Feed-forward carry organization is used. Finally a conditional sum adder speeds the final adder stage.

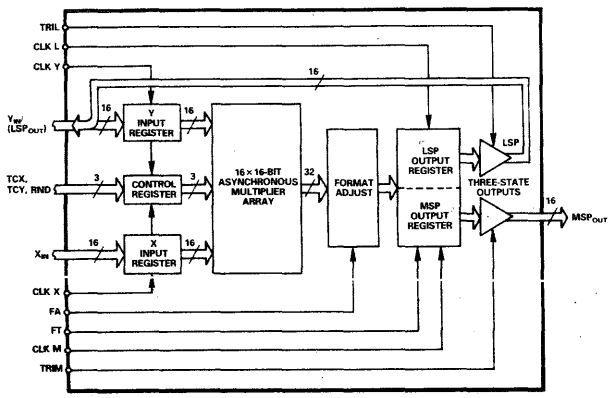

ADSP-1016 Functional Block Diagram

SPECIFICATIONS (max over power supply and temperature range unless otherwise noted).

Model	Bit Size	Multiply, Time (ns) +25°C/Over T_{amb}	Power Dissipation	Package	Temp. Range[1]	Notes
ADSP-1080JD	8×8	100/115	75mW	40-Pin DIP	C	Two's Complement
ADSP-1080KD	8×8	85/100	75mW	40-Pin DIP	C	Two's Complement
ADSP-1080SD/883B	8×8	100/130	100mW	40-Pin DIP	M	Two's Complement
ADSP-1080TD/883B	8×8	85/115	100mW	40-Pin DIP	M	Two's Complement
ADSP-1081JD	8×8	90/105	75mW	40-Pin DIP	C	Unsigned Magnitude
ADSP-1081KD	8×8	75/90	75mW	40-Pin DIP	C	Unsigned Magnitude
ADSP-1081SD/883B	8×8	90/120	100mW	40-Pin DIP	M	Unsigned Magnitude
ADSP-1081TD/883B	8×8	75/105	100mW	40-Pin DIP	M	Unsigned Magnitude
ADSP-1012JD[2]	12×12	140/165	125mW	64-Pin DIP	C	Two's Complement
ADSP-1012KD	12×12	110/130	125mW	64-Pin DIP	C	Two's Complement
ADSP-1012SD/883B	12×12	140/195	150mW	64-Pin DIP	M	Two's Complement
ADSP-1012TD/883B	12×12	110/150	150mW	64-Pin DIP	M	Two's Complement
ADSP-1016JD[2]	16×16	180/220	125mW	64-Pin DIP	C	Two's Complement
ADSP-1016KD	16×16	145/170	125mW	64-Pin DIP	C	Two's Complement
ADSP-1016SD/883B	16×16	180/250	150mW	64-Pin DIP	M	Two's Complement
ADSP-1016TD/883B	16×16	145/200	150mW	64-Pin DIP	M	Two's Complement

NOTES
[1]C = Commercial 0 to +70°C; M = Military −55°C to +125°C.
[2]ADSP-1012 and ADSP-1016 are also available in 68-Terminal Ceramic Leadless Chip Carrier and 68-Terminal Pin Grid Package.

© IC MASTER 1984

CMOS MULTIPLIER/ACCUMULATORS

The Multiplier/Accumulators will perform either a multiplication and addition, or a multiplication and subtraction, or a straight multiplication depending upon the status of the controls. The TC control provides the capability for either two's complement or unsigned magnitude data formats.

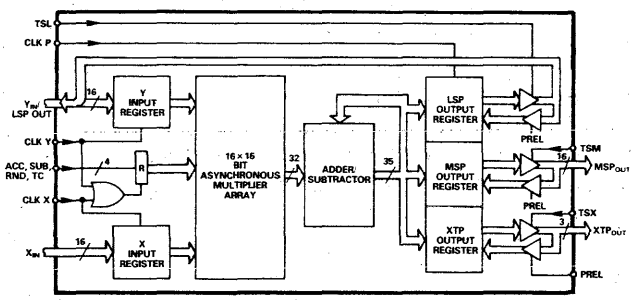

ADSP1010 Functional Block Diagram

SPECIFICATIONS (max over power supply and temperature range unless otherwise noted).

Model	Bit Size	Multiply Accumulate Time (ns) +25°C/Over T_{amb}	Power Dissipation	Package	Temp. Range[1]
ADSP-1008JD	8×8	135/160	75mW	48-Pin DIP	C
ADSP-1008KD	8×8	105/125	75mW	48-Pin DIP	C
ADSP-1008SD/883B	8×8	135/185	100mW	48-Pin DIP	M
ADSP-1008TD/883B	8×8	105/145	100mW	48-Pin DIP	M
ADSP-1009JD[2]	12×12	165/195	125mW	64-Pin DIP	C
ADSP-1009KD	12×12	130/155	125mW	64-Pin DIP	C
ADSP-1009SD/883B	12×12	165/225	150mW	64-Pin DIP	M
ADSP-1009TD/883B	12×12	130/180	150mW	64-Pin DIP	M
ADSP-1010JD[2]	16×16	200/240	125mW	64-Pin DIP	C
ADSP-1010KD	16×16	165/190	125mW	64-Pin DIP	C
ADSP-1010SD/883B	16×16	180/250	150mW	64-Pin DIP	M
ADSP-1010TD/883B	16×16	165/220	150mW	64-Pin DIP	M
ADSP1110KD	16×16	200/230	150mW	28-Pin DIP	C
ADSP1110TD/883B	16×16	200/270	150mW	28-Pin DIP	M

NOTES
[1]C = Commercial 0 to +70°C; M = Military −55°C to +125°C
[2]ADSP-1009 and ADSP-1010 are also available in 68-Terminal Ceramic Leadless Chip Carrier and 68-Terminal Pin Grid Package.

© IC MASTER 1984

54F/74F74

DUAL D-TYPE POSITIVE EDGE-TRIGGERED FLIP-FLOP

DESCRIPTION — The 'F74 is a dual D-type flip-flop with Direct Clear and Set inputs and complementary (Q, $\overline{Q}$) outputs. Information at the input is transferred to the outputs on the positive edge of the clock pulse. Clock triggering occurs at a voltage level of the clock pulse and is not directly related to the transition time of the positive-going pulse. After the Clock Pulse input threshold voltage has been passed, the Data input is locked out and information present will not be transferred to the outputs until the next rising edge of the Clock Pulse input.

Asynchronous Inputs:
LOW input to $\overline{S}_D$ sets Q to HIGH level
LOW input to $\overline{C}_D$ sets Q to LOW level
Clear and Set are independent of clock
Simultaneous LOW on $\overline{C}_D$ and $\overline{S}_D$ makes both Q and $\overline{Q}$ HIGH

TRUTH TABLE
(Each Half)

INPUT	OUTPUTS	
@ t_n	@ t_{n+1}	
D	Q	$\overline{Q}$
L	L	H
H	H	L

H = HIGH Voltage Level
L = LOW Voltage Level
t_n = Bit time before clock pulse
t_{n+1} = Bit time after clock pulse

CONNECTION DIAGRAM

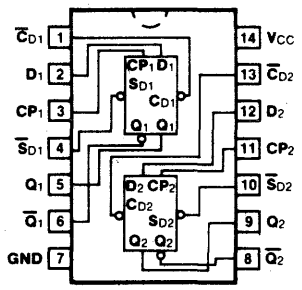

LOGIC SYMBOL

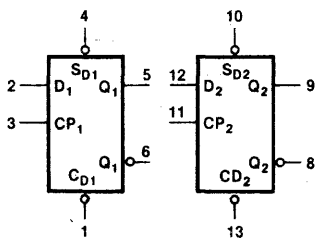

V_{CC} = Pin 14
GND = Pin 7

ORDERING CODE

PKGS	COMMERICAL GRADE V_{CC} = +5.0 V ±5%, T_A = 0°C to +70°C	MILITARY GRADE V_{CC} = +5.0 V ±10%, T_A = -55°C to +125°C	PKG TYPE
Plastic DIP (P)	74F74PC		9A
Ceramic DIP (D)	74F74DC	54F74DM	6A
Flatpak (F)		54F74FM	3I

INPUT LOADING/FAN-OUT

PIN NAMES	DESCRIPTION	54F/74F (U.L.) HIGH/LOW
D_1, D_2	Data Inputs	0.5/0.375
CP_1, CP_2	Clock Pulse Inputs (Active Rising Edge)	0.5/0.375
$\overline{C}_{D1}$, $\overline{C}_{D2}$	Direct Clear Inputs (Active LOW)	0.5/1.125
$\overline{S}_{D1}$, $\overline{S}_{D2}$	Direct Set Inputs (Active LOW)	0.5/1.125
Q_1, $\overline{Q}_1$, Q_2, $\overline{Q}_2$	Outputs	25/12.5

© IC MASTER 1984

LOGIC DIAGRAM

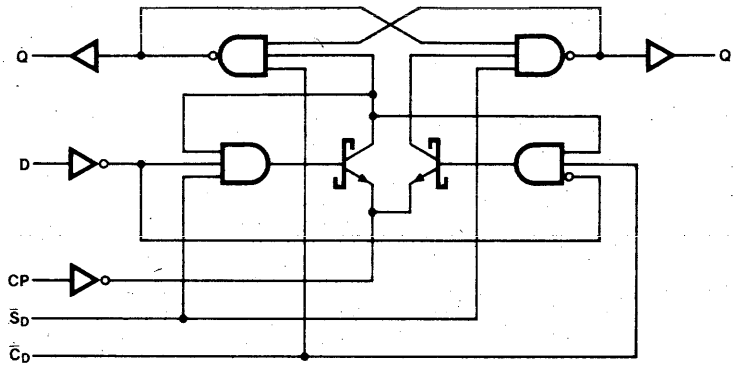

Please note that this diagram is provided only for the understanding of logic operations and should not be used to estimate propagation delays.

DC CHARACTERISTICS OVER OPERATING TEMPERATURE RANGE (unless otherwise specified)

SYMBOL	PARAMETER	54F/74F			UNITS	CONDITIONS
		Min	Typ	Max		
I_{CC}	Power Supply Current		10.5	16	mA	V_{CC} = Max, V_{CP} = 0 V

AC CHARACTERISTICS

SYMBOL	PARAMETER	54F/74F			54F		74F		UNITS
		T_A = +25°C, V_{CC} = +5.0 V, C_L = 50 pF			T_A, V_{CC} = Mil, C_L = 50 pF		T_A, V_{CC} = Com, C_L = 50 pF		
		Min	Typ	Max	Min	Max	Min	Max	
f_{max}	Maximum Clock Frequency	100	125		100		100		MHz
t_{PLH} t_{PHL}	Propagation Delay CP_n to Q_n or $\overline{Q}_n$	3.8 4.4	5.3 6.2	6.8 8.0	3.8 4.4	8.5 10.5	3.8 4.4	7.8 9.2	ns
t_{PLH} t_{PHL}	Propagation Delay $\overline{C}_{Dn}$ or $\overline{S}_{Dn}$ to Q_n or $\overline{Q}_n$	3.2 3.5	4.6 7.0	6.1 9.0	3.2 3.5	8.0 11.5	3.2 3.5	7.1 10.5	ns

AC OPERATING REQUIREMENTS

SYMBOL	PARAMETER	54F/74F			54F		74F		UNITS
		T_A = +25°C, V_{CC} = +5.0 V			T_A, V_{CC} = Mil		T_A, V_{CC} = Com		
		Min	Typ	Max	Min	Max	Min	Max	
t_s (H) t_s (L)	Setup Time, HIGH or LOW D_n to CP_n	2.0 3.0			3.0 4.0		2.0 3.0		ns
t_h (H) t_h (L)	Hold Time, HIGH or LOW D_n to CP_n	1.0 1.0			2.0 2.0		1.0 1.0		ns
t_w (H) t_w (L)	CP_n Pulse Width, HIGH or LOW	4.0 5.0			4.0 6.0		4.0 5.0		ns
t_w (L)	$\overline{C}_{Dn}$ or $\overline{S}_{Dn}$ Pulse Width LOW	4.0			4.0		4.0		ns
t_{rec}	Recovery Time $\overline{C}_{Dn}$ or $\overline{S}_{Dn}$ to CP	2.0			3.0		2.0		ns

54F/74F160A • 54F/74F162A

SYNCHRONOUS PRESETTABLE BCD DECADE COUNTER

DESCRIPTION — The 'F160A and 'F162A are high-speed synchronous decade counters operating in the BCD (8421) sequence. They are synchronously presettable for application in programmable dividers and have two types of Count Enable inputs plus a Terminal Count output for versatility in forming synchronous multistage counters. The 'F160A has an asynchronous Master Reset input that overrides all other inputs and forces the outputs LOW. The 'F162A has a Synchronous Reset input that overrides counting and parallel loading and allows all outputs to be simultaneously reset on the rising edge of the clock. The 'F160A and 'F162A are high speed versions of the 'F160 and 'F162.

- **SYNCHRONOUS COUNTING AND LOADING**
- **HIGH-SPEED SYNCHRONOUS EXPANSION**
- **TYPICAL COUNT RATE OF 120 MHz**

CONNECTION DIAGRAM

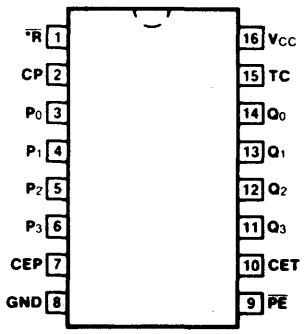

*$\overline{MR}$ for '160A
*$\overline{SR}$ for '162A

LOGIC SYMBOL

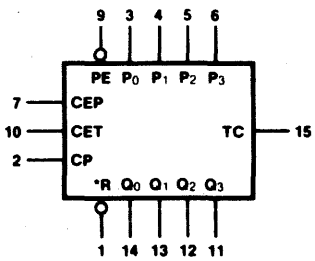

VCC = Pin 16 *$\overline{MR}$ for '160A
GND = Pin 8 *$\overline{SR}$ for '162A

ORDERING CODE

PKGS	COMMERICAL GRADE	MILITARY GRADE	PKG TYPE
	V_{CC} = +5.0 V ±5%, T_A = 0°C to +70°C	V_{CC} = +5.0 V ±10%, T_A = -55°C to +125°C	
Plastic DIP (P)	74F160APC, 74F162APC		9B
Ceramic DIP (D)	74F160ADC, 74F162ADC	54F160ADM, 54F162ADM	7B
Flatpak (F)		54F160AFM, 54F162AFM	4L

INPUT LOADING/FAN-OUT

PIN NAMES	DESCRIPTION	54F/74F (U.L.) HIGH/LOW
CEP	Count Enable Parallel Input	0.5/0.375
CET	Count Enable Trickle Input	0.5/0.75
CP	Clock Pulse Input (Active Rising Edge)	0.5/0.375
$\overline{MR}$ ('F160A)	Asynchronous Master Reset Input (Active LOW)	0.5/0.375
$\overline{SR}$ ('F162A)	Synchronous Reset Input (Active LOW)	0.5/0.75
P_0-P_3	Parallel Data Inputs	0.5/0.375
$\overline{PE}$	Parallel Enable Input (Active LOW)	0.5/0.75
Q_0-Q_3	Flip-flop Outputs	25/12.5
TC	Terminal Count Output	25/12.5

© IC MASTER 1984

FUNCTIONAL DESCRIPTION — The 'F160A and 'F162A count modulo-10 in the BCD (8421) sequence. From state 9 (HLLH) they increment to state 0 (LLLL). The clock inputs of all flip-flops are driven in parallel through a clock buffer. Thus all changes of the Q outputs (except due to Master Reset of the ('F160A) occur as a result of, and synchronous with, the LOW-to-HIGH transition of the CP input signal. The circuits have four fundamental modes of operation, in order of precedence; asynchronous reset ('F160A), synchronous reset ('F162A), parallel load, count-up and hold. Five control inputs — Master Reset ($\overline{MR}$, 'F160A), Synchronous Reset ($\overline{SR}$, 'F162A), Parallel Enable ($\overline{PE}$), Count Enable Parallel (CEP) and Count Enable Trickle (CET) — determine the mode of operation, as shown in the Mode Select Table. A LOW signal on $\overline{MR}$ overrides all other inputs and asynchronously forces all outputs LOW. A LOW signal on $\overline{SR}$ overrides counting and parallel loading and allows all outputs to go LOW on the next rising edge of CP. A LOW signal on $\overline{PE}$ overrides counting and allows information on the Parallel Date (P_n) inputs to be loaded into the flip-flops on the next rising edge of CP. With $\overline{PE}$ and $\overline{MR}$ ('F160A) or $\overline{SR}$ ('F162A) HIGH, CEP and CET permit counting when both are HIGH. Conversely, a LOW signal on either CEP or CET inhibits counting.

The 'F160A and 'F162A use D-type edge-triggered flip-flops and changing the $\overline{SR}$, $\overline{PE}$, CEP and CET inputs when the CP is in either state does not cause errors, provided that the recommended setup and hold times, with respect to the rising edge of CP, are observed.

The Terminal Count (TC) output is HIGH when CET is HIGH and counter is in state 9. To implement synchronous multistage counters, the TC outputs can be used with the CEP and CET inputs in two different ways. Please refer to the 'F568 data sheet. The TC output is subject to decoding spikes due to internal race conditions and is therefore not recommended for use as a clock or asynchronous reset for flip-flops, counters or registers. In the 'F160A, 'F162A decade counters, the TC output is fully decoded and can only be HIGH in state 9. If a decade counter is preset to an illegal state, or assumes an illegal state when power is applied, it will return to the normal sequence within two counts, as shown in the State Diagram.

Logic Equations: Count Enable = CEP • CET • $\overline{PE}$
TC = $Q_0 \bullet \overline{Q_1} \bullet \overline{Q_2} \bullet Q_3 \bullet$ CET

MODE SELECT TABLE

*$\overline{SR}$	$\overline{PE}$	CET	CEP	Action on the Rising Clock Edge (⎍)
L	X	X	X	RESET (Clear)
H	L	X	X	LOAD ($P_n \rightarrow Q_n$)
H	H	H	H	COUNT (Increment)
H	H	L	X	NO CHANGE (Hold)
H	H	X	L	NO CHANGE (Hold)

*For the 'F162A only
H = HIGH Voltage Level
L = LOW Voltage Level
X = Immaterial

STATE DIAGRAM

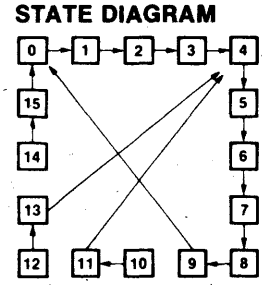

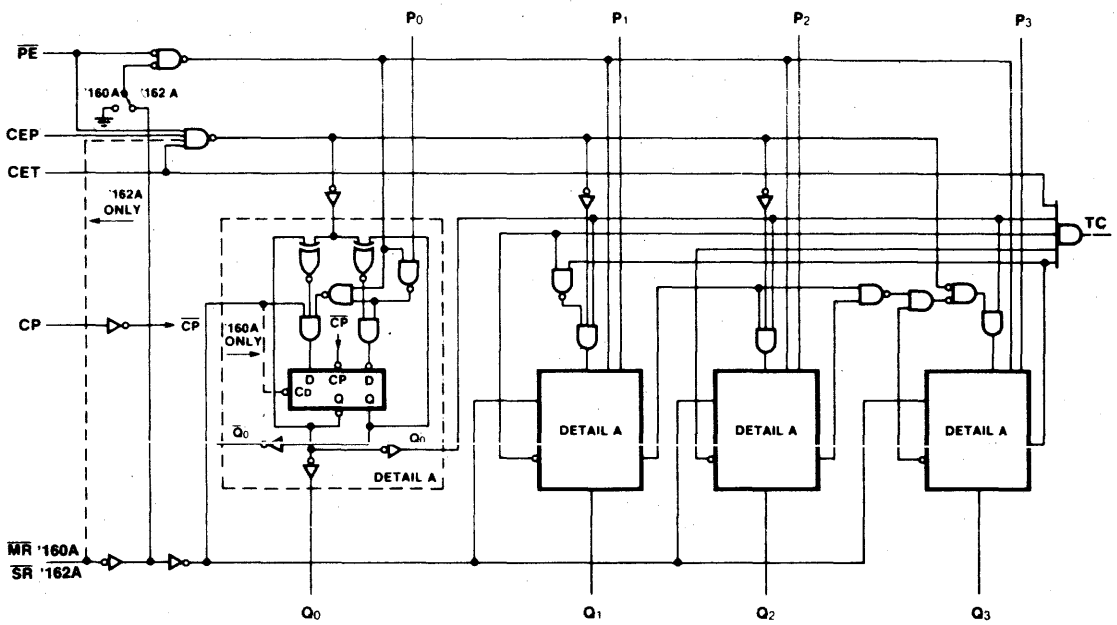

Please note that this diagram is provided only for the understanding of logic operations and should not be used to estimate propagation delays.

DC CHARACTERISTICS OVER OPERATING TEMPERATURE RANGE (unless otherwise specified)

SYMBOL	PARAMETER	54F/74F			UNITS	CONDITIONS
		Min	Typ	Max		
I_{CC}	Power Supply Current		37	55	mA	V_{CC} = Max

© IC MASTER 1984

AC CHARACTERISTICS

SYMBOL	PARAMETER	54F/74F T_A = +25°C, V_{CC} = +5.0 V C_L = 50 pF			54F T_A, V_{CC} = Mil C_L = 50 pF		74F T_A, V_{CC} = Com C_L = 50 pF		UNITS
		Min	Typ	Max	Min	Max	Min	Max	
f_{max}	Maximum Count Frequency	100	120				90		MHz
t_{PLH} t_{PHL}	Propagation Delay CP to Q_n ($\overline{PE}$ Input HIGH)	3.5 4.5	5.5 7.5	7.5 10			3.5 4.5	8.5 11	ns
t_{PLH} t_{PHL}	Propagation Delay CP to Q_n ($\overline{PE}$ Input LOW)	4.0 4.0	6.0 6.0	8.5 8.5			4.0 4.0	9.5 9.5	
t_{PLH} t_{PHL}	Propagation Delay CP to TC	5.0 5.0	10 10	14 14			5.0 5.0	15 15	ns
t_{PLH} t_{PHL}	Propagation Delay CET to TC	2.5 2.5	4.5 4.5	7.5 7.5			2.5 2.5	8.5 8.5	ns
t_{PHL}	Propagation Delay $\overline{MR}$ to Q_n ('F160A)	5.5	9.0	12			5.5	13	ns

AC OPERATING REQUIREMENTS

SYMBOL	PARAMETER	54F/74F T_A = +25°C, V_{CC} = +5.0 V			54F T_A, V_{CC} = Mil		74F T_A, V_{CC} = Com		UNITS
		Min	Typ	Max	Min	Max	Min	Max	
t_s (H) t_s (L)	Setup Time, HIGH or LOW P_n to CP	5.0 5.0					5.0 5.0		ns
t_h (H) t_h (L)	Hold Time, HIGH or LOW P_n to CP	2.0 2.0					2.0 2.0		
t_s (H) t_s (L)	Setup Time, HIGH or LOW $\overline{PE}$ or $\overline{SR}$ to CP	11 5.0					11.5 6.0		ns
t_h (H) t_h (L)	Hold Time, HIGH or LOW $\overline{PE}$ or $\overline{SR}$ TO CP	2.0 0					2.0 0		
t_s (H) t_s (L)	Setup Time, HIGH or LOW CEP or CET to CP	11 5.0					11.5 6.0		ns
t_h (H) t_h (L)	Hold Time, HIGH or LOW CEP or CET to CP	2.0 0					2.0 0		
t_w (H) t_w (L)	Clock Pulse Width, (Load) HIGH or LOW	5.0 5.0					5.0 5.0		ns
t_w (H) t_w (L)	Clock Pulse Width, (Count) HIGH or LOW	4.0 6.0					4.0 7.0		ns
t_w (L)	$\overline{MR}$ Pulse Width LOW ('F160A)	5.0					5.0		ns
t_{rec}	Recovery Time $\overline{MR}$ to CP ('F160A)	6.0					6.0		

54F/74F161A • 54F/74F163A

SYNCHRONOUS PRESETTABLE BINARY COUNTER

DESCRIPTION — The 'F161A and 'F163A are high-speed synchronous modulo-16 binary counters. They are synchronously presettable for application in programmable dividers and have two types of Count Enable inputs plus a Terminal Count output for versatility in forming synchronous multistage counters. The 'F161A has an asynchronous Master Reset input that overrides all other inputs and forces the outputs LOW. The 'F163A has a Synchronous Reset input that overrides counting and parallel loading and allows the outputs to be simultaneously reset on the rising edge of the clock. The 'F161A and 'F163A are high speed versions of the 'F161 and 'F163.

- **SYNCHRONOUS COUNTING AND LOADING**
- **HIGH SPEED SYNCHRONOUS EXPANSION**
- **TYPICAL COUNT FREQUENCY OF 120 MHz**

CONNECTION DIAGRAM

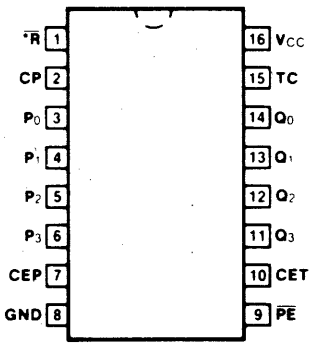

*$\overline{MR}$ for '161A
*$\overline{SR}$ for '163A

LOGIC SYMBOL

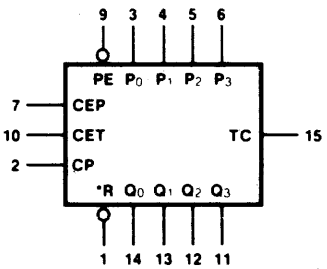

*$\overline{MR}$ for '161A VCC = Pin 16
*$\overline{SR}$ for '163A GND = Pin 8

ORDERING CODE

PKGS	COMMERICAL GRADE	MILITARY GRADE	PKG TYPE
	V_{CC} = +5.0 V ±5%, T_A = 0°C to +70°C	V_{CC} = +5.0 V ±10%, T_A = -55°C to +125°C	
Plastic DIP (P)	74F161APC, 74F163APC		9B
Ceramic DIP (D)	74F161ADC, 74F163ADC	54F161ADM, 54F163ADM	7B
Flatpak (F)		54F161AFM, 54F163AFM	4L

INPUT LOADING/FAN-OUT

PIN NAMES	DESCRIPTION	54F/74F (U.L.) HIGH/LOW
CEP	Count Enable Parallel Input	0.5/0.375
CET	Count Enable Trickle Input	0.5/0.75
CP	Clock Pulse Input (Active Rising Edge)	0.5/0.375
$\overline{MR}$ ('F161A)	Asynchronous Master Reset Input (Active LOW)	0.5/0.375
$\overline{SR}$ ('F163A)	Synchronous Reset Input (Active LOW)	0.5/0.75
P_0-P_3	Parallel Data Inputs	0.5/0.375
$\overline{PE}$	Parallel Enable Input (Active LOW)	0.5/0.75
Q_0-Q_3	Flip-flop Outputs	25/12.5
TC	Terminal Count Output	25/12.5

© IC MASTER 1984

FUNCTIONAL DESCRIPTION — The 'F161A and 'F163A count in modulo-16 binary sequence. From state 15 (HHHH) they increment to state 0 (LLLL). The clock inputs of all flip-flops are driven in parallel through a clock buffer. Thus all changes of the Q outputs (except due to Master Reset of the 'F161A) occur as a result of, and synchronous with, the LOW-to-HIGH transition of the CP input signal. The circuits have four fundamental modes of operation, in order of precedence: asynchronous reset ('F161A), synchronous reset ('F163A), parallel load, count-up and hold. Five control inputs — Master Reset ($\overline{MR}$, 'F161A), Synchronous Reset ($\overline{SR}$, 'F163A), Parallel Enable ($\overline{PE}$), Count Enable Parallel (CEP) and Count Enable Trickle (CET — determine the mode of operation, as shown in the Mode Select Table. A LOW signal on $\overline{MR}$ overrides all other inputs and asynchronously forces all outputs LOW. A LOW signal on $\overline{SR}$ overrides counting and parallel loading and allows all outputs to go LOW on the next rising edge of CP. A LOW signal on $\overline{PE}$ overrides counting and allows information on the Parallel Data (P_n) inputs to be loaded into the flip-flops on the next rising edge of CP. With $\overline{PE}$ and $\overline{MR}$ ('F161A) or $\overline{SR}$ ('F163A) HIGH, CEP and CET permit counting when both are HIGH. Conversely, a LOW signal on either CEP or CET inhibits counting.

The 'F161A and 'F163A use D-type edge triggered flip-flops and changing the $\overline{SR}$, $\overline{PE}$, CEP and CET inputs when the CP is in either state does not cause errors, provided that the recommended setup and hold times, with respect to the rising edge of CP, are observed.

The Terminal Count (TC) output is HIGH when CET is HIGH and the counter is in state 15. To implement synchronous multistage counters, the TC outputs can be used with the CEP and CET inputs in two different ways. Please refer to the 'F568 data sheet. The TC output is subject to decoding spikes due to internal race conditions and is therefore not recommended for use as a clock or asynchronous reset for flip-flops, counters or registers.

Logic Equations: Count Enable = CEP • CET • $\overline{PE}$

TC = $Q_0 \bullet Q_1 \bullet Q_2 \bullet Q_3 \bullet$ CET

MODE SELECT TABLE

$\overline{SR}$	$\overline{PE}$	CET	CEP	Action on the Rising Clock Edge (_/‾)
L	X	X	X	RESET (Clear)
H	L	X	X	LOAD ($P_n \rightarrow Q_n$)
H	H	H	H	COUNT (Increment)
H	H	L	X	NO CHANGE (Hold)
H	H	X	L	NO CHANGE (Hold)

STATE DIAGRAM

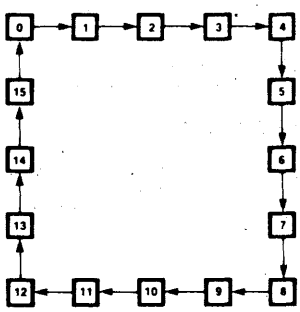

LOGIC DIAGRAM

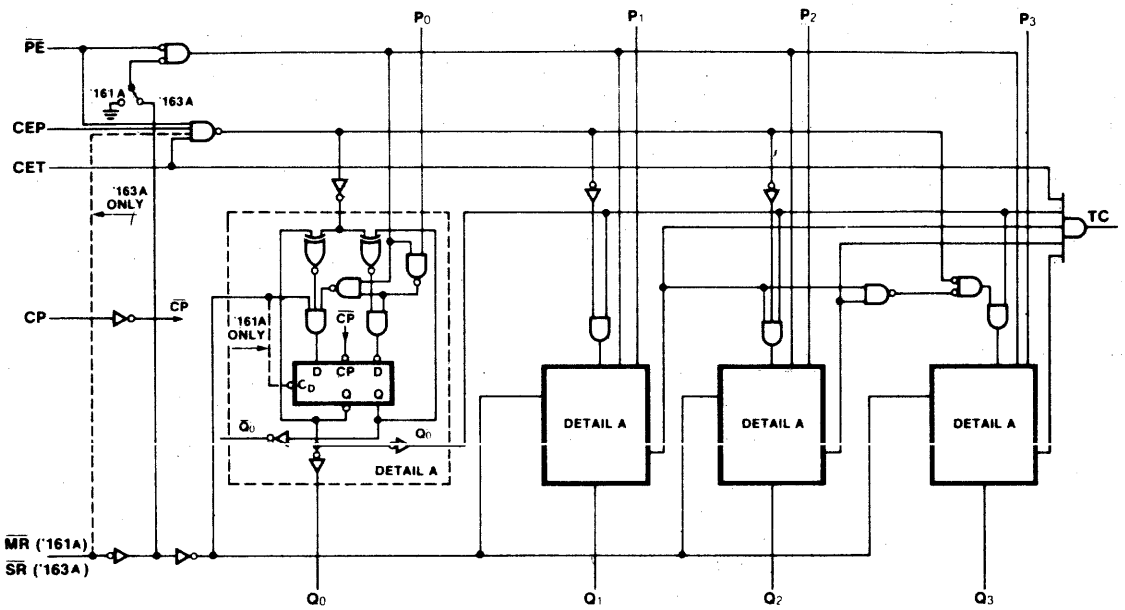

Please note that this diagram is provided only for the understanding of logic operations and should not be used to estimate propagation delays.

DC CHARACTERISTICS OVER OPERATING TEMPERATURE RANGE (unless otherwise specified)

SYMBOL	PARAMETER	54F/74F			UNITS	CONDITIONS
		Min	Typ	Max		
I_{CC}	Power Supply Current		37	55	mA	V_{CC} = Max

© IC MASTER 1984

AC CHARACTERISTICS

SYMBOL	PARAMETER	54F/74F $T_A = +25°C$, $V_{CC} = +5.0$ V $C_L = 50$ pF			54F T_A, V_{CC} = Mil $C_L = 50$ pF		74F T_A, V_{CC} = Com $C_L = 50$ pF		UNITS
		Min	Typ	Max	Min	Max	Min	Max	
f_{max}	Maximum Count Frequency	100	120				90		MHz
t_{PLH}	Propagation Delay	3.5	5.5	7.5			3.5	8.5	ns
t_{PHL}	CP to Q_n ($\overline{PE}$ Input HIGH)	4.5	7.5	10			4.5	11	
t_{PLH}	Propagation Delay	4.0	6.0	8.5			4.0	9.5	
t_{PHL}	CP to Q_n ($\overline{PE}$ Input LOW)	4.0	6.0	8.5			4.0	9.5	
t_{PLH}	Propagation Delay	5	10	14			5	15	ns
t_{PHL}	CP to TC	5	10	14			5	15	
t_{PLH}	Propagation Delay	2.5	4.5	7.5			2.5	8.5	ns
t_{PHL}	CET to TC	2.5	4.5	7.5			2.5	8.5	
t_{PHL}	Propagation Delay $\overline{MR}$ to Q_n ('F161A)	5.5	9.0	12			5.5	13	ns

AC OPERATING REQUIREMENTS

SYMBOL	PARAMETER	54F/74F $T_A = +25°C$, $V_{CC} = +5.0$ V			54F T_A, V_{CC} = Mil		74F T_A, V_{CC} = Com		UNITS
		Min	Typ	Max	Min	Max	Min	Max	
t_s (H)	Setup Time, HIGH or LOW	5.0					5.0		ns
t_s (L)	P_n to CP	5.0					5.0		
t_h (H)	Hold Time, HIGH or LOW	2.0					2.0		
t_h (L)	P_n to CP	2.0					2.0		
t_s (H)	Setup Time, HIGH or LOW	11					11.5		ns
t_s (L)	$\overline{PE}$ or $\overline{SR}$ to CP	5.0					6.0		
t_h (H)	Hold Time, HIGH or LOW	2.0					2.0		
t_h (L)	$\overline{PE}$ or $\overline{SR}$ TO CP	0					0		
t_s (H)	Setup Time, HIGH or LOW	11					11.5		ns
t_s (L)	CEP or CET to CP	5.0					6.0		
t_h (H)	Hold Time, HIGH or LOW	2.0					2.0		
t_h (L)	CEP or CET to CP	0					0		
t_w (H)	Clock Pulse Width, (Load)	5.0					5.0		ns
t_w (L)	HIGH or LOW	5.0					5.0		
t_w (H)	Clock Pulse Width, (Count)	4.0					4.0		ns
t_w (L)	HIGH or LOW	6.0					7.0		
t_w (L)	$\overline{MR}$ Pulse Width LOW ('F161A)	5.0					5.0		ns
t_{rec}	Recovery Time $\overline{MR}$ to CP ('F161A)	6.0					6.0		

54F/74F181

4-BIT ARITHMETIC LOGIC UNIT

DESCRIPTION—The 'F181 is a 4-bit Arithmetic Logic Unit (ALU) which can perform all the possible 16 logic operations on two variables and a variety of arithmetic operations. It is 40% faster than the Schottky ALU and only consumes 30% as much power.

- **PROVIDES 16 ARITHMETIC OPERATIONS ADD, SUBTRACT, COMPARE, DOUBLE, PLUS TWELVE OTHER ARITHMETIC OPERATIONS**
- **PROVIDES ALL 16 LOGIC OPERATIONS OF TWO VARIABLES EXCLUSIVE-OR, COMPARE, AND, NAND, OR, NOR, PLUS TEN OTHER LOGIC OPERATIONS.**
- **FULL LOOKAHEAD FOR HIGH-SPEED ARITHMETIC OPERATION ON LONG WORDS**

CONNECTION DIAGRAM

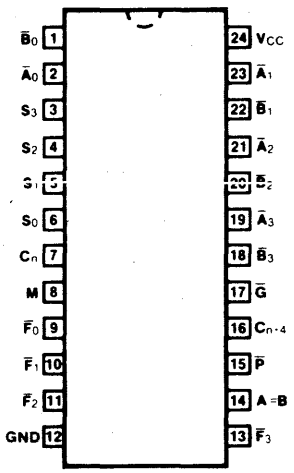

ORDERING CODE:

PKGS	COMMERCIAL GRADE V_{CC} = +5.0 V ±5%, T_A = 0°C to +70°C	MILITARY GRADE V_{CC} = +5.0 V ±10%, T_A = -55°C to +125°C	PKG TYPE
Plastic DIP (P)	74F181PC		9N
Ceramic DIP (D)	74F181DC	54F181DM	6N
Flatpak (F)		54F181FM	4M

INPUT LOADING/FAN-OUT:

PIN NAMES	DESCRIPTION	54F/74F (U.L.) HIGH/LOW
$\overline{A}_0$ - $\overline{A}_3$	A Operand Inputs (Active LOW)	0.5/1.125
$\overline{B}_0$ - $\overline{B}_3$	B Operand Inputs (Active LOW)	0.5/1.125
S_0 - S_3	Function Select Inputs	0.5/1.50
M	Mode Control Input	0.5/0.375
C_n	Carry Input	0.5/1.875
$\overline{F}_0$ - $\overline{F}_3$	Function Outputs (Active LOW)	25/12.5
A = B	Comparator Output	OC*/12.5
$\overline{G}$	Carry Generate Output (Active LOW)	25/12.5
$\overline{P}$	Carry Propagate Output (Active LOW)	25/12.5
C_{n+4}	Carry Output	25/12.5

*OC — Open Collector

© IC MASTER 1984

FUNCTIONAL DESCRIPTION—The 'F181 is a 4-bit high-speed parallel Arithmetic Logic Unit (ALU). Controlled by the four Function Select inputs (S_0-S_3) and the Mode Control input (M), it can perform all the 16 possible logic operations or 16 different arithmetic operations on active-HIGH or active-LOW operands. The Function Table lists these operations.

When the Mode Control input (M) is HIGH, all internal carries are inhibited and the device performs logic operations on the individual bits as listed. When the Mode Control input is LOW, the carries are enabled and the device performs arithmetic operations on the two 4-bit words. The device incorporates full internal carry lookahead and provides for either ripple carry between devices using the C_{n+4} output, or for carry lookahead between packages using the signal $\overline{P}$ (Carry Propagate) and $\overline{G}$ (Carry Generate). In the Add mode, $\overline{P}$ indicates that $\overline{F}$ is 15 or more, while $\overline{G}$ indicates that $\overline{F}$ is 16 or more. In the Subtract mode, $\overline{P}$ indicates that $\overline{F}$ is zero or less, while $\overline{G}$ indicates that $\overline{F}$ is less than zero. $\overline{P}$ and $\overline{G}$ are not affected by carry in. When speed requirements are not stringent, it can be used in a simple Ripple Carry mode by connecting the Carry output (C_{n+4}) signal to the Carry input (C_n) of the next unit. For high-speed operation the device is used in conjunction with a carry lookahead circuit. One carry lookahead package is required for each group of four 'F181 devices. Carry lookahead can be provided at various levels and offers high speed capability over extremely long word lengths.

The A=B output from the device goes HIGH when all four $\overline{F}$ outputs are HIGH and can be used to indicate logic equivalence over four bits when the unit is in the Subtract mode. The A=B output is open collector and can be wired-AND with other A=B outputs to give a comparison for more than four bits. The A=B signal can also be used with the C_{n+4} signal to indicate A>B and A<B.

The Function Table lists the arithmetic operations that are performed without a carry in. An incoming carry adds a one to each operation. Thus, select code LHHL generates A minus B minus 1 (2s complement notation) without a carry in and generates A minus B when a carry is applied. Because subtraction is actually performed by complementary addition (1s complement), a carry out means $\overline{\text{borrow}}$; thus a carry is generated when there is no underflow and no carry is generated when there is underflow. As indicated, this device can be used with either active-LOW inputs producing active-LOW outputs or with active-HIGH inputs producing active-HIGH outputs. For either case the table lists the operations that are performed to the operands labeled inside the logic system.

LOGIC SYMBOLS

ACTIVE-HIGH OPERANDS

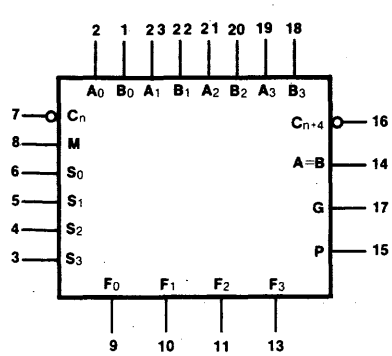

V_{CC} = Pin 24
GND = Pin 12

ACTIVE-LOW OPERANDS

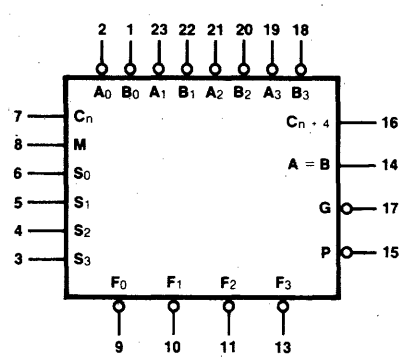

FUNCTION TABLE

MODE SELECT INPUTS				ACTIVE-LOW OPERANDS & F_n OUTPUTS		ACTIVE-HIGH OPERANDS & F_n OUTPUTS	
S_3	S_2	S_1	S_0	LOGIC (M = H)	ARITHMETIC** (M = L) (C_n = L)	LOGIC (M = H)	ARITHMETIC** (M = L) (C_n = H)
L	L	L	L	$\overline{A}$	A minus 1	$\overline{A}$	A
L	L	L	H	$\overline{AB}$	AB minus 1	$\overline{A+B}$	A + B
L	L	H	L	$\overline{A}+B$	$A\overline{B}$ minus 1	$\overline{A}B$	$A+\overline{B}$
L	L	H	H	Logic 1	minus 1	Logic 0	minus 1
L	H	L	L	$\overline{A+B}$	A plus $(A+\overline{B})$	$\overline{A\overline{B}}$	A plus $A\overline{B}$
L	H	L	H	$\overline{B}$	AB plus $(A+\overline{B})$	$\overline{B}$	(A + B) plus $A\overline{B}$
L	H	H	L	$\overline{A \oplus B}$	A minus B minus 1	$A \oplus B$	A minus B minus 1
L	H	H	H	$A+\overline{B}$	$A+\overline{B}$	$A\overline{B}$	$A\overline{B}$ minus 1
H	L	L	L	$\overline{A}B$	A plus (A + B)	$\overline{A+B}$	A plus AB
H	L	L	H	$A \oplus B$	A plus B	$\overline{A \oplus B}$	A plus B
H	L	H	L	B	$A\overline{B}$ plus (A + B)	B	$(A+\overline{B})$ plus AB
H	L	H	H	A + B	A + B	AB	AB minus 1
H	H	L	L	Logic 0	A plus A*	Logic 1	A plus A*
H	H	L	H	$A\overline{B}$	AB plus A	$A+\overline{B}$	(A + B) plus A
H	H	H	L	AB	$A\overline{B}$ minus A	A + B	$(A+\overline{B})$ plus A
H	H	H	H	A	A	A	A minus 1

*each bit is shifted to the next more significant position
**arithmetic operations expressed in 2s complement notation

H = HIGH Voltage Level
L = LOW Voltage Level

LOGIC DIAGRAM

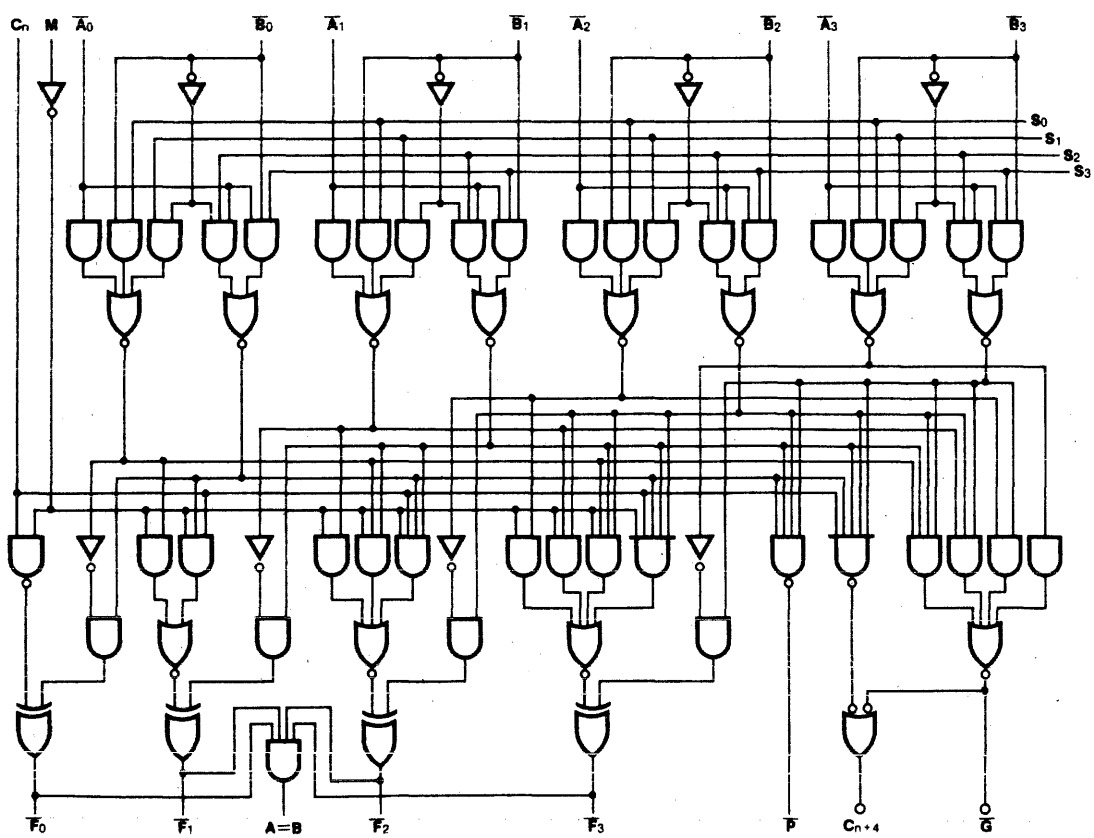

© IC MASTER 1984

DC CHARACTERISTICS OVER OPERATING TEMPERATURE RANGE (unless otherwise specified)

SYMBOL	PARAMETER	54F/74F Min	54F/74F Typ	54F/74F Max	UNITS	CONDITIONS
I_{OH}	Output HIGH Current			250	μA	V_{OH} = 4.5 V, V_{CC} = Min, A = B
I_{CC}	Power Supply Current		43	65	mA	V_{CC} = Max

AC CHARACTERISTICS:

SYMBOL	PARAMETER Path	Mode	54F/74F (T_A = +25°C, V_{CC} = +5.0 V, C_L = 50 pF) Min	Typ	Max	54F (T_A, V_{CC} = Mil, C_L 50 pF) Min	Max	74F (T_A, V_{CC} = Com, C_L = 50 pF) Min	Max	UNITS
t_{PLH}	C_n to C_{n+4}		3.0	6.4	8.5	3.0	12	3.0	9.5	ns
t_{PHL}			3.0	6.1	8.0	3.0	11.5	3.0	9.0	
t_{PLH}	$\overline{A}$ or $\overline{B}$ to C_{n+4}	Sum	5.0	10	13	5.0	18	5.0	14	ns
t_{PHL}			5.0	9.4	12	5.0	17	5.0	13	
t_{PLH}	$\overline{A}$ or $\overline{B}$ to C_{n+4}	Dif	5.0	10.8	14	5.0	19.5	5.0	15	ns
t_{PHL}			5.0	10	13	5.0	18	5.0	14	
t_{PLH}	C_n to $\overline{F}$	Any	3.0	6.7	8.5	3.0	12	3.0	9.5	ns
t_{PHL}			3.0	6.5	8.5	3.0	12	3.0	9.5	
t_{PLH}	$\overline{A}$ or $\overline{B}$ to $\overline{G}$	Sum	3.0	5.7	7.5	3.0	10.5	3.0	8.5	ns
t_{PHL}			3.0	5.8	7.5	3.0	10.5	3.0	8.5	
t_{PLH}	$\overline{A}$ or $\overline{B}$ to $\overline{G}$	Dif	3.0	6.5	8.5	3.0	12	3.0	9.5	ns
t_{PHL}			3.0	7.3	9.5	3.0	13.5	3.0	10.5	
t_{PLH}	$\overline{A}$ or $\overline{B}$ to $\overline{P}$	Sum	3.0	5.0	7.0	3.0	10	3.0	8.0	ns
t_{PHL}			3.0	5.5	7.5	3.0	10.5	3.0	8.5	
t_{PLH}	$\overline{A}$ or $\overline{B}$ to $\overline{P}$	Dif	4.0	5.8	7.5	4.0	10.5	4.0	8.5	ns
t_{PHL}			4.0	6.5	8.5	4.0	12	4.0	9.5	
t_{PLH}	$\overline{A_i}$ or $\overline{B_i}$ to $\overline{F_i}$	Sum	3.0	7.0	9.0	3.0	12.5	3.0	10	ns
t_{PHL}			3.0	7.2	10	3.0	14	3.0	10	
t_{PLH}	$\overline{A_i}$ or $\overline{B_i}$ to $\overline{F_i}$	Dif	3.0	8.2	11	3.0	15.5	3.0	12	ns
t_{PHL}			3.0	5.0	11	3.0	15.5	3.0	12	
t_{PLH}	Any $\overline{A}$ or $\overline{B}$ to Any $\overline{F}$	Sum	4.0	8.0	10.5	4.0	15.5	4.0	11.5	ns
t_{PHL}			4.0	7.8	10	4.0	14	4.0	11	
t_{PLH}	Any $\overline{A}$ or $\overline{B}$ to Any $\overline{F}$	Dif	4.5	9.4	12	4.5	17	4.5	13	ns
t_{PHL}			4.5	9.4	12	4.5	17	4.5	13	
t_{PLH}	$\overline{A}$ or $\overline{B}$ to $\overline{F}$	Logic	4.0	6.0	9.0	4.0	12.5	4.0	10	ns
t_{PHL}			4.0	6.0	10	4.0	14	4.0	11	
t_{PLH}	$\overline{A}$ or $\overline{B}$ to A = B	Dif	11	18.5	27	11	35	11	29	ns
t_{PHL}			7.0	9.8	12.5	7.0	17.5	7.0	13.5	

▨ Test limits in screened columns are preliminary.

54F/74F190 • 54F/74F191

UP/DOWN COUNTERS
(WITH PRESET AND RIPPLE CLOCK)

CONNECTION DIAGRAM

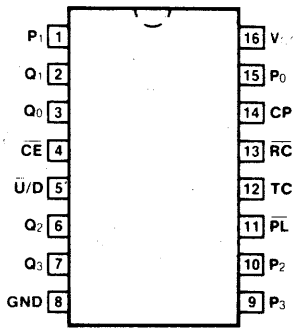

DESCRIPTION — The 'F190 is a reversible BCD(8421) decade counter. The 'F191 is a reversible modulo 16 binary counter. Both feature synchronous counting and asynchronous presetting. The preset feature allows the 'F190 and 'F191 to be used in programmable dividers. The Count Enable input, the Terminal Count output and the Ripple Clock output make possible a variety of methods of implementing multistage counters. In the counting modes, state changes are initiated by the rising edge of the clock.

- **HIGH-SPEED—125 MHz TYPICAL COUNT FREQUENCY**
- **SYNCHRONOUS COUNTING**
- **ASYNCHRONOUS PARALLEL LOAD**
- **CASCADABLE**

LOGIC SYMBOL

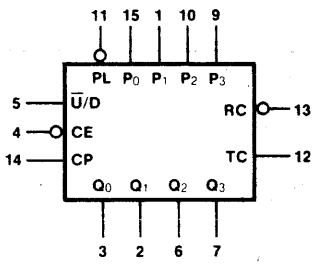

V_{CC} = Pin 16
GND = Pin 8

ORDERING CODE

PKGS	COMMERICAL GRADE	MILITARY GRADE	PKG TYPE
	V_{CC} = +5.0 V ±5%, T_A = 0°C to +70°C	V_{CC} = +5.0 V ±10%, T_A = -55°C to +125°C	
DIP (P)	74F190PC, 74F191PC		9B
Ceramic DIP (D)	74F190DC, 74F191DC	54F190DM, 54F191DM	7B
Flatpak (F)		54F190FM, 54F191FM	4L

INPUT LOADING/FAN-OUT

PIN NAMES	DESCRIPTION	54F/74F (U.L.) HIGH/LOW
$\overline{CE}$	Count Enable Input (Active LOW)	0.5/1.125
CP	Clock Pulse Input (Active Rising Edge)	0.5/0.375
P_0 - P_0	Parallel Data Inputs	0.5/0.375
$\overline{PL}$	Asynchronous Parallel Load Input (Active LOW)	0.5/0.375
$\overline{U}$/D	Up/Down Count Control Input	0.5/0.375
Q_0 - Q_3	Flip-flop Outputs	25/12.5
$\overline{RC}$	Ripple Clock Output (Active LOW)	25/12.5
TC	Terminal Count Output (Active HIGH)	25/12.5

© IC MASTER 1984

FUNCTIONAL DESCRIPTION — The 'F190/191 are synchronous up/down counters. The 'F190 is a BCD decade counter while the 'F191 is organized as a 4 bit binary counter. Both contain four edge triggered flip-flops with internal gating and steering logic to provide individual preset, count-up and count-down operations.

Each circuit has an asynchronous parallel load capability permitting the counter to be preset to any desired number. When the Parallel Load ($\overline{PL}$) input is LOW, information present on the Parallel Data inputs (P_0 - P_3) is loaded into the counter and appears on the Q outputs. This operation overrides the counting functions, as indicated in the Mode Select Table.

A HIGH signal on the $\overline{CE}$ input inhibits counting. When $\overline{CE}$ is LOW, internal state changes are initiated synchronously by the LOW-to-HIGH transition of the clock input. The direction of counting is determined by the $\overline{U}$/D input signal, as indicated in the Mode Select Table. $\overline{CE}$ and $\overline{U}$/D can be changed with the clock in either state, provided only that the recommended setup and hold times are observed.

Two types of outputs are provided as overflow/underflow indicators. The terminal count (TC) output is normally LOW. It goes HIGH when the circuits reach zero in the count down mode or 9 ('F190) or 16 ('F191) in the count up mode. The TC output will then remain HIGH until a state change occurs, whether by counting or presetting or until $\overline{U}$/D is changed. The TC output should not be used as a clock signal because it is subject to decoding spikes.

The TC signal is also used internally to enable the Ripple Clock ($\overline{RC}$) output. The $\overline{RC}$ output is normally HIGH. When $\overline{CE}$ is LOW and TC is HIGH, the $\overline{RC}$ output will go LOW when the clock next goes LOW and will stay LOW until the clock goes HIGH again. This feature simplifies the design of multistage counters, as indicated in *Figures a* and *b*. In *Figure a*, each $\overline{RC}$ output is used as the clock input for the next higher stage. This configuration is particularly advantageous when the clock source has a limited drive capability, since it drives only the first stage. To prevent counting in all stages it is only necessary to inhibit the first stage, since a HIGH signal on $\overline{CE}$ inhibits the $\overline{RC}$ output pulse, as indicated in the $\overline{RC}$ Truth Table. A disadvantage of this configuration, in some applications, is the timing skew between state changes in the first and last stages. This represents the cumulative delay of the clock as it ripples through the preceding stages.

A method of causing state changes to occur simultaneously in all stages is shown in *Figure b*. All clock inputs are driven in parallel and the $\overline{RC}$ outputs propagate the carry/borrow signals in ripple fashion. In this configuration the LOW state duration of the clock must be long enough to allow the negative-going edge of the carry/borrow signal to ripple through to the last stage before the clock goes HIGH. There is no such restriction on the HIGH state duration of the clock, since the $\overline{RC}$ output of any device goes HIGH shortly after its CP input goes HIGH.

The configuration shown in *Figure c* avoids ripple delays and their associated restrictions. The $\overline{CE}$ input for a given stage is formed by combining the TC signals from all the preceding stages. Note that in order to inhibit counting an enable signal must be included in each carry gate. The simple inhibit scheme of *Figures a* and *b* doesn't apply, because the TC output of a given stage is not affected by its own $\overline{CE}$.

MODE SELECT TABLE

INPUTS				MODE
$\overline{PL}$	$\overline{CE}$	$\overline{U}$/D	CP	
H	L	L	↑	Count Up
H	L	H	↑	Count Down
L	X	X	X	Preset (Asyn.)
H	H	X	X	No Change (Hold)

'F191 STATE DIAGRAM

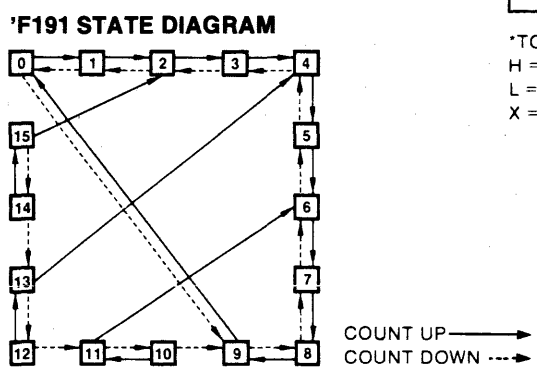

$\overline{RC}$ TRUTH TABLE

INPUTS			OUTPUT
$\overline{CE}$	TC*	CP	$\overline{RC}$
L	H	↑	↑
H	X	X	H
X	L	X	H

*TC is generated internally
H = HIGH Voltage Level
L = LOW Voltage Level
X = Immaterial

FIG. A N-STATE COUNTER USING RIPPLE CLOCK

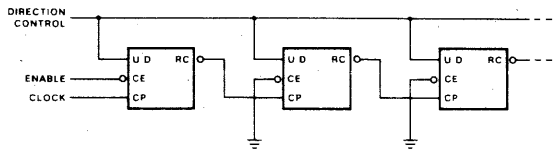

FIG. B SYNCHRONOUS N-STAGE COUNTER USING RIPPLE CARRY/BORROW

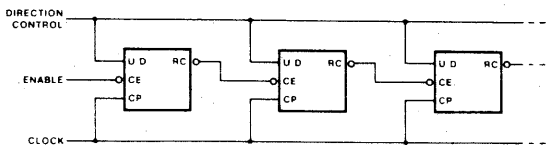

FIG. C SYNCHRONOUS N-STAGE COUNTER WITH PARALLEL GATED CARRY/BORROW

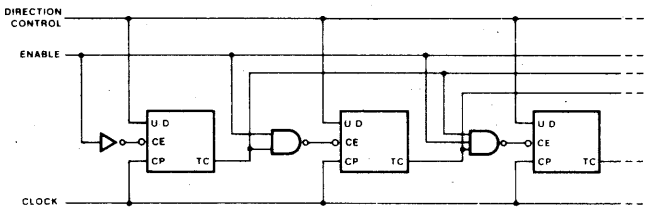

DC CHARACTERISTICS OVER OPERATING TEMPERATURE RANGE (unless otherwise specified)

SYMBOL	PARAMETER	54F/74F			UNITS	CONDITIONS
		Min	Typ	Max		
I_{CC}	Power Supply Current		38	55	mA	V_{CC} = Max

AC CHARACTERISTICS

SYMBOL	PARAMETER	54F/74F			54F		74F		UNITS
		T_A = +25°C, V_{CC} = +5.0 V C_L = 50 pF			T_A, V_{CC} = Mil C_L = 50 pF		T_A, V_{CC} = Com C_L = 50 pF		
		Min	Typ	Max	Min	Max	Min	Max	
f_{max}	Maximum Count Frequency	100	125				90		MHz
t_{PLH} t_{PHL}	Propagation Delay CP to Q_n	3.0 5.0	5.5 8.5	7.5 11.0			3.0 5.0	8.5 12.0	ns
t_{PLH} t_{PHL}	Propagation Delay CP to TC	6.0 5.0	10 8.5	13.0 11.0			6.0 5.0	14.0 12.0	ns
t_{PLH} t_{PHL}	Propagation Delay CP to $\overline{RC}$	3.0 3.0	5.5 5.0	7.5 7.0			3.0 3.0	8.5 8.0	ns
t_{PLH} t_{PHL}	Propagation Delay $\overline{CE}$ to $\overline{RC}$	3.0 3.0	5.0 5.5	7.0 7.0			3.0 3.0	8.0 8.0	ns
t_{PLH} t_{PHL}	Propagation Delay $\overline{U}$/D to $\overline{RC}$	7.0 5.5	11 9	18 12			7.0 5.5	20 13	ns
t_{PLH} t_{PHL}	Propagation Delay $\overline{U}$/D to TC	4.0 4.0	7 6.5	10 10			4.0 4.0	11 11	ns
t_{PLH} t_{PHL}	Propagation Delay P_n to Q_n	3.0 6.0	4.5 10	7.0 13			3.0 6.0	8.0 14	ns
t_{PLH} t_{PHL}	Propagation Delay $\overline{PL}$ to Q_n	5.0 5.5	8.5 9	11 12			5.0 5.5	12 13	ns

© IC MASTER 1984

AC OPERATING REQUIREMENTS

SYMBOL	PARAMETER	54F/74F $T_A = +25°C$, $V_{CC} = +5.0$ V			54F T_A, V_{CC} = Mil		74F T_A, V_{CC} = Com		UNITS
		Min	Typ	Max	Min	Max	Min	Max	
t_s (H) t_s (L)	Setup Time, HIGH or LOW P_n to $\overline{PL}$	6.0 6.0					6.0 6.0		ns
t_h (H) t_h (L)	Hold Time, HIGH or LOW P_n to $\overline{PL}$	4.0 4.0					4.0 4.0		ns
t_s (L)	Setup Time LOW $\overline{CE}$ to CP	10.0					10.0		ns
t_h (L)	Hold Time LOW $\overline{CE}$ to CP	0					0		ns
t_s (H) t_s (L)	Setup Time, HIGH or LOW $\overline{U}$/D to CP	12 12					12 12		ns
t_h (H) t_h (L)	Hold Time, HIGH or LOW $\overline{U}$/D to CP	0 0					0 0		ns
t_w (L)	$\overline{PL}$ Pulse Width, LOW	6.0					6.0		ns
t_w (L)	CP Pulse Width, LOW	5.0					5.0		ns
t_{rec}	Recovery Time $\overline{PL}$ to CP	6.0					6.0		ns

54F/74F192 • 54F/74F193

UP/DOWN COUNTERS (WITH SEPARATE UP/DOWN CLOCKS)

DESCRIPTION — The 'F192 is an up/down BCD decade (8421) counter. The 'F193 is an up/down modulo-16 binary counter. Separate Count Up and Count Down Clocks are used, and in either counting mode the circuits operate synchronously. The outputs change state synchronously with the LOW-to-HIGH transitions on the clock inputs.

Separate Terminal Count UP and Terminal Count Down outputs are provided that are used as the clocks for a subsequent stage without extra logic, thus simplifying multistage counter designs. Individual preset inputs allow the circuit to be used as a programmable counter. Both the Parallel Load ($\overline{PL}$) and the Master Reset (MR) inputs asynchronously override the clocks.

CONNECTION DIAGRAM

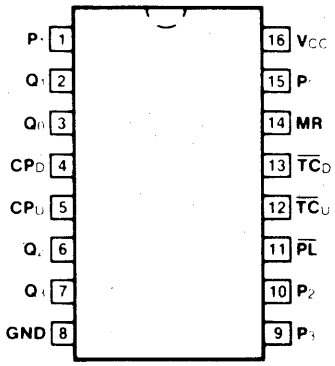

LOGIC SYMBOL

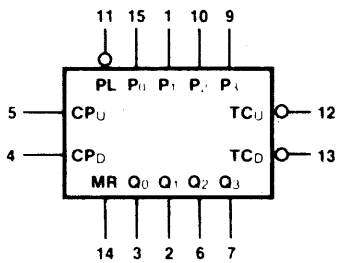

V_{CC} = Pin 16
GND = Pin 8

ORDERING CODE

PKGS	COMMERICAL GRADE	MILITARY GRADE	PKG TYPE
	V_{CC} = +5.0 V ±5%, T_A = 0°C to +70°C	V_{CC} = +5.0 V ±10%, T_A = -55°C to +125°C	
Plastic DIP (P)	74F192PC, 74F193PC		9B
Ceramic DIP (D)	74F192DC, 74F193DC	54F192DM, 54F193DM	6B
Flatpak (F)		54F192FM, 54F193FM	4L

INPUT LOADING/FAN-OUT

PIN NAMES	DESCRIPTION	54F/74F HIGH/LOW
CP_U	Count Up Clock Input (Active Rising Edge)	0.5/1.125
CP_D	Count Down Clock Input (Active Rising Edge)	0.5/1.125
MR	Asynchronous Master Reset Input (Active HIGH)	0.5/0.375
$\overline{PL}$	Asynchronous Parallel Load Input (Active LOW)	0.5/0.375
P_0 - P_3	Parallel Data Inputs	0.5/0.375
Q_0 - Q_3	Flip-flop Outputs	25/12.5
$\overline{TC_D}$	Terminal Count Down (Borrow) Output (Active LOW)	25/12.5
$\overline{TC_U}$	Terminal Count UP (Carry) Output (Active LOW)	25/12.5

© IC MASTER 1984

FUNCTIONAL DESCRIPTION — The 'F192, 193 are asynchronously presettable counters. The 'F192 is a decade counter while the 'F193 is organized for 4 bit binary operation. They both contain four edge triggered flip-flops, with internal gating and steering logic to provide master reset, individual preset, count up and count down operations.

A LOW-to-HIGH transition on the CP input to each flip-flop causes the output to change state. Synchronous switching, as opposed to ripple counting, is achieved by driving the steering gates of all stages from a common Count Up line and a common Count Down line, thereby causing all state changes to be initiated simultaneously. A LOW-to-HIGH transition on the Count Up input will advance the count by one; a similar transition on the Count Down input will decrease the count by one. While counting with one clock input, the other should be held HIGH, as indicated in the Function Table. Otherwise, the circuit will either count by twos or not at all, depending on the state of the first flip-flop, which cannot toggle as long as either clock input is LOW.

The Terminal Count Up ($\overline{TC}_U$) and Terminal Count Down ($\overline{TC}_D$) outputs are normally HIGH. When the circuit has reached the maximum count state; 9 ('F192) or 16 ('F193), the reset HIGH-to-LOW transition of the Count Up Clock will cause $\overline{TC}_U$ to go LOW. $\overline{TC}_U$ will stay LOW until CP_U goes HIGH again, thus effectively repeating the Count Up Clock, but delayed by two gate delays. Similarly, the $\overline{TC}_D$ output will go LOW when the circuit is in the zero state and the Count Down Clock goes LOW. Since the $\overline{TC}$ outputs repeat the clock waveforms, they can be used as the clock input signals to the next higher order circuit in a multistage counter.

$$\overline{TC}_U = Q_0 \bullet Q_3 \bullet \overline{CP}_U$$
$$\overline{TC}_D = \overline{Q}_0 \bullet \overline{Q}_1 \bullet \overline{Q}_2 \bullet \overline{Q}_3 \bullet \overline{CP}_D$$

Both the 'F192 and the 'F193 have an asynchronous parallel load capability permitting the counter to be preset. When the Parallel Load ($\overline{PL}$) and the Master Reset (MR) inputs are LOW, information present on the Parallel Data input (P_0 - P_3) is loaded into the counter and appears on the outputs regardless of the conditions of the clock inputs. A HIGH signal on the Master Reset input will disable the preset gates, override both clock inputs, and latch each Q output in the LOW state. If one of the clock inputs is LOW during and after a reset or load operation, the next LOW-to-HIGH transition of that clock will be interpreted as a legitimate signal and will be counted.

FUNCTION TABLE

MR	$\overline{PL}$	CP_U	CP_D	MODE
H	X	X	X	Reset (Asyn.)
L	L	X	X	Preset (Asyn.)
L	H	H	H	No Change
L	H	↑	H	Count Up
L	H	H	↑	Count Down

H = HIGH Voltage Level
L = LOW Voltage Level
X = Immaterial

'F192 STATE DIAGRAM

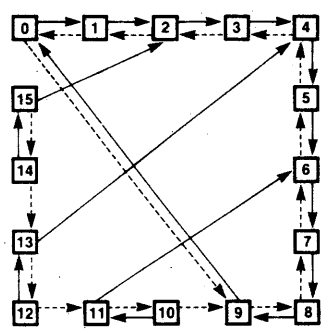

→ COUNT UP
--→ COUNT DOWN

DC CHARACTERISTICS OVER OPERATING TEMPERATURE RANGE (unless otherwise specified)

SYMBOL	PARAMETER	54F/74F			UNITS	CONDITIONS
		Min	Typ	Max		
I_{CC}	Power Supply Current		38	55	mA	V_{CC} = Max

AC CHARACTERISTICS

SYMBOL	PARAMETER	54F/74F $T_A = +25°C$, $V_{CC} = +5.0$ V $C_L = 50$ pF			54F T_A, V_{CC} = Mil $C_L = 50$ pF		74F T_A, V_{CC} = Com $C_L = 50$ pF		UNITS
		Min	Typ	Max	Min	Max	Min	Max	
f_{max}	Maximum Count Frequency	100	125				90		MHz
t_{PLH} t_{PHL}	Propagation Delay CP_U or CP_D to $\overline{TC}_U$	4.0 3.5	7.0 6.0	9.0 8.0			4.0 3.5	10 9.0	ns
t_{PLH} t_{PHL}	Propagation Delay CP_U or CP_D to Q_n	4.0 5.5	6.5 9.5	8.5 12.5			4.0 5.5	9.5 13.5	ns
t_{PLH} t_{PHL}	Propagation Delay P_n to Q_n	3.0 6.0	4.5 11	7.0 14.5			3.0 6.0	8.0 15.5	ns
t_{PLH} t_{PHL}	Propagation Delay $\overline{PL}$ to Q_n	5.0 5.5	8.5 10	11 13			5.0 5.5	12 14	ns
t_{PHL}	Propagation Delay MR to Q_n	6.5	11	14.5			6.5	15.5	ns
t_{PLH}	Propagation Delay MR to $\overline{TC}_U$	6.0	10.5	13.5			6.0	14.5	ns
t_{PHL}	Propagation Delay MR to $\overline{TC}_D$	7.0	11.5	14.5			7.0	15.5	ns
t_{PLH} t_{PHL}	Propagation Delay $\overline{PL}$ to TC_U or $\overline{TC}_D$	7.0 7.0	12 11.5	15.5 14.5			7.0 7.0	16.5 15.5	ns
t_{PLH} t_{PHL}	Propagation Delay P_n to $\overline{TC}_U$ or $\overline{TC}_D$	7.0 6.5	11.5 11	14.5 14			7.0 6.5	15.5 15	ns

AC OPERATING REQUIREMENTS

SYMBOL	PARAMETER	54F/74F $T_A = +25°C$, $V_{CC} = +5.0$ V			54F T_A, V_{CC} = Mil		74F T_A, V_{CC} = Com		UNITS
		Min	Typ	Max	Min	Max	Min	Max	
t_s (H) t_s (L)	Setup Time, HIGH or LOW P_n to $\overline{PL}$	6.0 6.0					6.0 6.0		ns
t_h (H) t_h (L)	Hold Time, HIGH or LOW P_n to $\overline{PL}$	4.0 4.0					4.0 4.0		ns
t_w (L)	$\overline{PL}$ Pulse Width LOW	6.0					6.0		ns
t_w (L)	CP_U or CP_D Pulse Width LOW	5.0					5.0		ns
t_w (L)	CP_U or CP_D Pulse Width LOW (Change of Direction)	10					10		ns
t_w (H)	MR Pulse Width HIGH	6.0					6.0		ns
t_{rec}	Recovery Time $\overline{PL}$ to CP_U or CP_D	6.0					6.0		ns
t_{rec}	Recovery Time MR to CP_U or CP_D	4.0					4.0		ns

© IC MASTER 1984

54F/74F240 • 54F/74F241
54F/74F244

OCTAL BUFFER/LINE DRIVER

(With 3-State Outputs)

CONNECTION DIAGRAMS

'F240

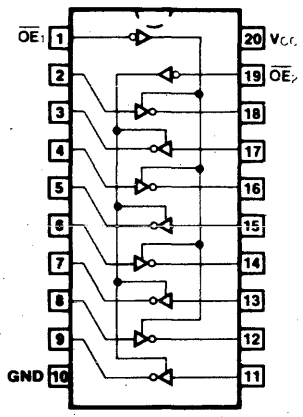

'F241

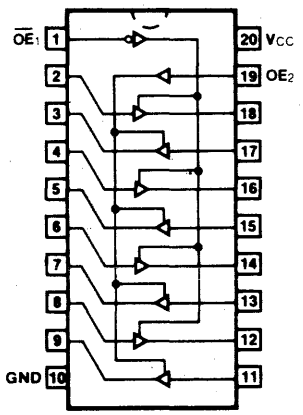

'F244

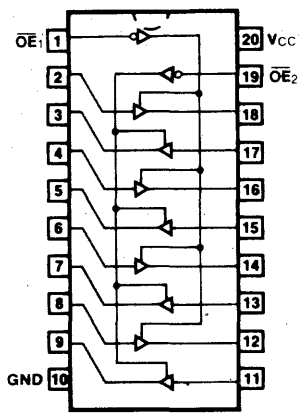

DESCRIPTION — The 'F240, 'F241 and 'F244 are octal buffers and line drivers designed to be employed as memory address drivers, clock drivers and bus oriented transmitters/receivers which provide improved PC board density.

- **HYSTERESIS AT INPUTS TO IMPROVE NOISE MARGINS**
- **3-STATE OUTPUTS DRIVE BUS LINES OR BUFFER MEMORY ADDRESS REGISTERS**
- **OUTPUTS SINK 64 mA**
- **15 mA SOURCE CURRENT**
- **INPUT CLAMP DIODES LIMIT HIGH SPEED TERMINATION EFFECTS**

ORDERING CODE:

PKGS	COMMERCIAL GRADE V_{CC} = +5.0 V ±5%, T_A = 0°C to +70°C	MILITARY GRADE V_{CC} = +5.0 V ±10%, T_A = -55°C to +125°C	PKG TYPE
Plastic DIP (P)	74F240PC, 74F241PC 74F244PC		9Z
Ceramic DIP (D)	74F240DC, 74F241DC 74F244DC	54F240DM, 54F241DM 54F244DM	4E
Flatpak (F)	74F240FC, 74F241FC 74F244FC	54F240FM, 54F241FM 54F244FM	4F

INPUT LOADING/FAN-OUT:

PIN NAMES	DESCRIPTION	54F/74F (U.L.) HIGH/LOW
$\overline{OE}_1$, $\overline{OE}_2$	3-State Output Enable (Active LOW)	0.5/0.625
OE_2	3-State Output Enable (Active HIGH)	0.5/0.625
	Inputs	0.5/1.0
	Outputs	75/40 (30)

'F240

INPUTS		OUTPUT
$\overline{OE_1}$, $\overline{OE_2}$	D	
L	L	H
L	H	L
H	X	Z

'F241

INPUTS			OUTPUT
$\overline{OE_1}$	OE_2	D	
L	H	L	L
L	H	H	H
H	L	X	Z

'F244

INPUTS		OUTPUT
$\overline{OE_1}$, $\overline{OE_2}$	D	
L	L	L
L	H	H
H	X	Z

H = HIGH Voltage Level L = LOW Voltage Level X Immaterial Z High Impedance

DC CHARACTERISTICS OVER OPERATING TEMPERATURE RANGE (unless otherwise specified)

SYMBOL	PARAMETER		54F/74F Min	Typ	Max	UNITS	CONDITIONS	
V_{OH}	Output HIGH Voltage	XM, XC	2.4			V	I_{OH} = -3.0 mA, V_{CC} = Min, V_{IN} = V_{IH} or V_{IL}	
		XM	2.0			V	I_{OH} = -12 mA	V_{IH} = 2.0 V, V_{CC} = Min, V_{IL} = 0.5 V
		XC	2.0				I_{OH} = -15 mA	
V_{OL}	Output LOW Voltage	XM			0.55	V	I_{OL} = 48 mA	V_{IN} = V_{IH} or V_{IL}, V_{CC} = Min
		XC			0.55		I_{OL} = 64 mA	
$V_{T+} - V_{T-}$	Hysteresis Voltage		0.2	0.4		V	V_{CC} = Min	
I_{OS}	Output Short Circuit Current		-100		-225	mA	V_{CC} = Max, V_{OUT} = 0 V	
I_{CCH}	Power Supply Current	'F240		19	29	mA	Outputs HIGH	V_{CC} = Max
		'F241, 'F244		40	60			
I_{CCL}		'F240		50	75	mA	Outputs LOW	
		'F241, 'F244		60	90			
I_{CCZ}		'F240		42	63	mA	Outputs OFF	
		'F241, 'F244		60	90			

AC CHARACTERISTICS:

SYMBOL	PARAMETER	54F/74F T_A = +25°C, V_{CC} = +5.0 V, C_L = 50 pF Min	Typ	Max	54F T_A, V_{CC} = MIL, C_L = 50 pF Min	Max	74F T_A, V_{CC} = COM, C_L = 50 pF Min	Max	UNITS
t_{PLH}	Propagation Delay	3.0	5.1	7.0	3.0	9.0	3.0	8.0	ns
t_{PHL}	Data to Output ('F240)	2.0	3.5	4.7	2.0	6.0	2.0	5.7	
t_{PZH}	Output Enable Time ('F240)	2.0	3.5	4.7	2.0	6.5	2.0	5.7	ns
t_{PZL}		4.0	6.9	9.0	4.0	10.5	4.0	10	
t_{PHZ}	Output Disable Time* ('F240)	2.0	4.0	5.3	2.0	6.5	2.0	6.3	
t_{PLZ}		2.0	6.0	8.0	2.0	12.5	2.0	9.5	
t_{PLH}	Propagation Delay	2.5	4.0	5.2	2.5	6.5	2.5	6.2	ns
t_{PHL}	Data to Output ('F241, 'F244)	2.5	4.0	5.2	2.5	7.0	2.5	6.5	
t_{PZH}	Output Enable Time ('F241, 'F244)	2.0	4.3	5.7	2.0	7.0	2.0	6.7	ns
t_{PZL}		2.0	5.4	7.0	2.0	8.5	2.0	8.0	
t_{PHZ}	Output Disable Time ('F241, 'F244)	2.0	4.5	6.0	2.0	7.0	2.0	7.0	
t_{PLZ}		2.0	4.5	6.0	2.0	7.5	2.0	7.0	

© IC MASTER 1984

54F/74F299

8-INPUT UNIVERSAL SHIFT/STORAGE REGISTER (WITH COMMON PARALLEL I/O PINS

DESCRIPTION — The 'F299 is an 8-bit universal shift/storage register with 3-state outputs. Four modes of operation are possible: hold (store), shift left, shift right and load data. The parallel load inputs and flip-flop outputs are multiplexed to reduce the total number of package pins. Additional outputs are provided for flip-flops Q_0 and Q_7 to allow easy serial cascading. A separate active-LOW Master Reset is used to reset the register.

- **COMMON PARALLEL I/O FOR REDUCED PIN COUNT**
- **ADDITIONAL SERIAL INPUTS AND OUTPUTS FOR EXPANSION**
- **FOUR OPERATING MODES: SHIFT LEFT, SHIFT RIGHT, LOAD AND STORE**
- **3-STATE OUTPUTS FOR BUS ORIENTED APPLICATIONS**

CONNECTION DIAGRAM

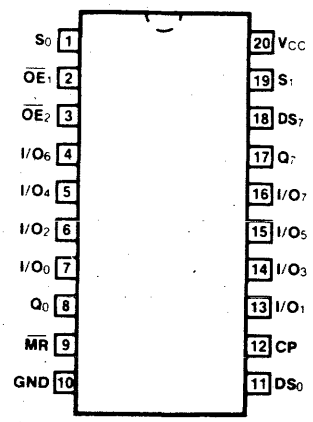

LOGIC SYMBOL

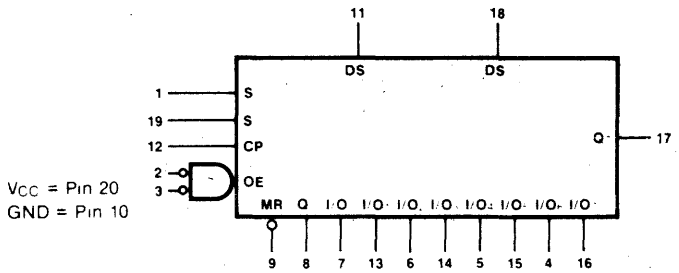

ORDERING CODE

PKGS	COMMERICAL GRADE V_{CC} = +5.0 V ±5%, T_A = 0°C to +70°C	MILITARY GRADE V_{CC} = +5.0 V ±10%, T_A = -55°C to +125°C	PKG TYPE
Plastic DIP (P)	74F299PC		9Z
Ceramic DIP (D)	74F299DC	54F299DM	4E
Flatpak (F)		54F299FM	4D

INPUT LOADING/FAN-OUT

PIN NAMES	DESCRIPTION	54F/74F HIGH/LOW
CP	Clock Pulse Input (Active Rising Edge)	0.5/0.375
DS_0	Serial Data Input for Right Shift	0.5/0.375
DS_7	Serial Data Input for Left Shift	0.5/0.375
S_0, S_1	Mode Select Inputs	0.5/0.75
$\overline{MR}$	Asynchronous Master Reset Input (Active LOW)	0.5/0.375
$\overline{OE}_1$, $\overline{OE}_2$	3-State Output Enable Inputs (Active LOW)	0.5/0.375
I/O_0 - I/O_7	Parallel Data Inputs or	0.5/0.375
	3-State Parallel Outputs	25/12.5
Q_0, Q_7	Serial Outputs	25/12.5

© IC MASTER 1984

FUNCTIONAL DESCRIPTION — The 'F299 contains eight edge-triggered D-type flip-flops and the interstage logic necessary to perform synchronous shift left, shift right, parallel load and hold operations. The type of operation is determined by S_0 and S_1, as shown in the Mode Select Table. All flip-flop outputs are brought out through 3-state buffers to separate I/O pins that also serve as data inputs in the parallel load mode. Q_0 and Q_7 are also brought out on other pins for expansion in serial shifting of longer words.

A LOW signal on $\overline{MR}$ overrides the Select and CP inputs and resets the flip-flops. All other state changes are initiated by the rising edge of the clock. Inputs can change when the clock is in either state provided only that the recommended setup and hold times, relative to the rising edge of CP, are observed.

A HIGH signal on either $\overline{OE}_1$ or $\overline{OE}_2$ disables the 3-state buffers and puts the I/O pins in the high impedance state. In this condition the shift, hold, load and reset operations can still occur. The 3-state buffers are also disabled by HIGH signals on both S_0 and S_1 in preparation for a parallel load operation.

MODE SELECT TABLE

INPUTS				RESPONSE
$\overline{MR}$	S_1	S_0	CP	
L	X	X	X	Asynchronous Reset; $Q_0 - Q_7$ = LOW
H	H	H	↑	Parallel Load; $I/O_n \rightarrow Q_n$
H	L	H	↑	Shift Right; $DS_0 \rightarrow Q_0$, $Q_0 \rightarrow Q_1$, etc.
H	H	L	↑	Shift Left; $DS_7 \rightarrow Q_7$, $Q_7 \rightarrow Q_6$, etc.
H	L	L	X	Hold

H = HIGH Voltage Level
L = LOW Voltage Level
X = Immaterial

LOGIC DIAGRAM

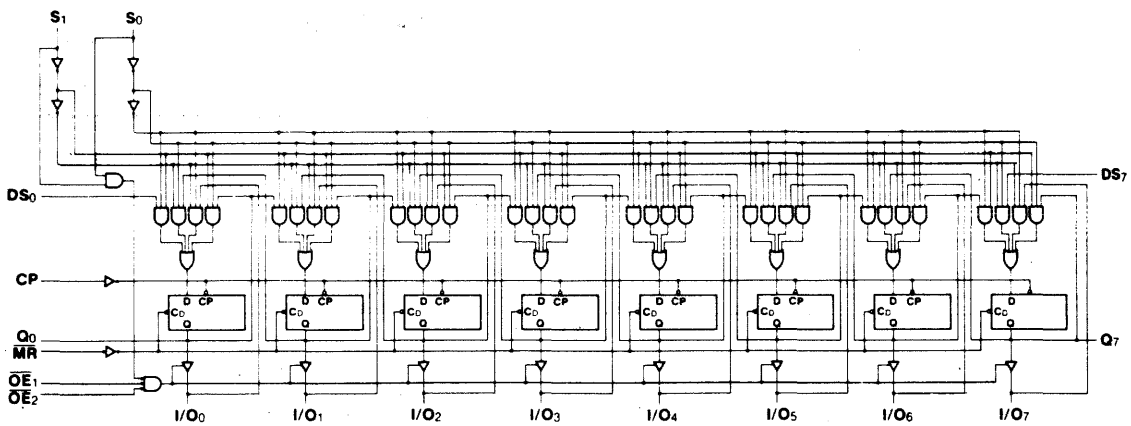

DC CHARACTERISTICS OVER OPERATING TEMPERATURE RANGE (unless otherwise specified)

SYMBOL	PARAMETER	54F/74F Min	54F/74F Typ	54F/74F Max	UNITS	CONDITIONS
I_{CC}	Power Supply Current		68	95	mA	V_{CC} = Max, $\overline{OE}$ = 4.5 V CP = HIGH
I_{IH}	Input HIGH Current Breakdown Test, $I/O_0 - I/O_7$			1.0	mA	V_{CC} = Max, V_{IN} = 5.5V
$I_{IH} + I_{OZH}$	3-State Output OFF Current HIGH, $I/O_0 - I/O_7$			70	μA	V_{CC} = Max, V_{OUT} = 2.4 V
$I_{IL} + I_{OZL}$	3-State Output OFF Current LOW, $I/O_0 - I/O_7$			−650	μA	V_{CC} = Max, V_{OUT} = 0.5 V

© IC MASTER 1984

AC CHARACTERISTICS

SYMBOL	PARAMETER	54F/74F $T_A = +25°C$, $V_{CC} = +5.0$ V $C_L = 50$ pF			54F T_A, V_{CC} = Mil $C_L = 50$ pF		74F T_A, V_{CC} = Com $C_L = 50$ pF		UNITS
		Min	Typ	Max	Min	Max	Min	Max	
f_{max}	Maximum Input Frequency	70	100				70		MHz
t_{PLH} t_{PHL}	Propagation Delay CP to Q_0 or Q_7	4.0 3.5	7.0 6.5	9.0 8.5			4.0 3.5	10 9.5	ns
t_{PLH} t_{PHL}	Propagation Delay CP to I O_n	4.0 5.0	7.0 8.5	9.0 11			4.0 5.0	10 12	
t_{PHL}	Propagation Delay $\overline{MR}$ to Q_0 or Q_7	4.5	7.5	9.5			4.5	10.5	ns
t_{PHL}	Propagation Delay $\overline{MR}$ to I O_n	6.5	11	14			6.5	15	
t_{PZH} t_{PZL}	Output Enable Time	3.5 4.0	6.0 7.0	8.0 10			3.5 4.0	9.0 11	ns
t_{PHZ} t_{PLZ}	Output Disable Time	2.5 2.0	4.5 4.0	6.0 5.5			2.5 2.0	7.0 6.5	

AC OPERATING REQUIREMENTS

SYMBOL	PARAMETER	54F/74F $T_A = +25°C$, $V_{CC} = +5.0$ V			54F T_A, V_{CC} = Mil		74F T_A, V_{CC} = Com		UNITS
		Min	Typ	Max	Min	Max	Min	Max	
t_s (H) t_s (L)	Setup Time, HIGH or LOW S_0 or S_1 to CP	8.5 8.5					8.5 8.5		ns
t_h (H) t_h (L)	Hold Time, HIGH or LOW S_0 or S_1 to CP	0 0					0 0		
t_s (H) t_s (L)	Setup Time, HIGH or LOW I/O_n, DS_0, DS_7 to CP	5.0 5.0					5.0 5.0		ns
t_h (H) t_h (L)	Hold Time, HIGH or LOW I/O_n, DS_0, DS_7 to CP	2.0 2.0					2.0 2.0		
t_w (H) t_w (L)	CP Pulse Width, HIGH or LOW	7.0 7.0					7.0 7.0		ns
t_w (L)	$\overline{MR}$ Pulse Width LOW	7.0					7.0		ns
t_{rec}	Recovery Time $\overline{MR}$ to CP	7.0					7.0		ns

54F/74F373

OCTAL TRANSPARENT LATCH

(With 3-State Outputs)

CONNECTION DIAGRAM

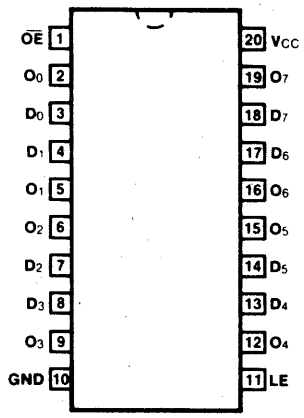

DESCRIPTION — The 'F373 consists of eight latches with 3-state outputs for bus organized system applications. The flip-flops appear transparent to the data when Latch Enable (LE) is HIGH. When LE is LOW, the data that meets the setup times is latched. Data appears on the bus when the Output Enable ($\overline{OE}$) is LOW. When $\overline{OE}$ is HIGH the bus output is in the high impedance state.

- **EIGHT LATCHES IN A SINGLE PACKAGE**
- **3-STATE OUTPUTS FOR BUS INTERFACING**

LOGIC SYMBOL

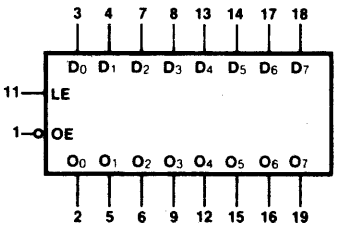

V_{CC} = Pin 20
GND = Pin 10

ORDERING CODE:

PKGS	COMMERCIAL GRADE V_{CC} = +5.0 V ±5%, T_A = 0°C to +70°C	MILITARY GRADE V_{CC} = +5.0 V ±10%, T_A = -55°C to +125°C	PKG TYPE
Plastic DIP (P)	74F373PC		9Z
Ceramic DIP (D)	74F373DC	54F373DM	4E
Flatpak (F)	74F373FC	54F373FM	4F

INPUT LOADING/FAN-OUT:

PIN NAMES	DESCRIPTION	54F/74F (U.L.) HIGH/LOW
D_0 — D_7	Data Inputs	0.5/0.375
LE	Latch Enable Input (Active HIGH)	0.5/0.375
$\overline{OE}$	Output Enable Input (Active LOW)	0.5/0.375
O_0 — O_7	3-State Latch Outputs	25/12.5

FUNCTIONAL DESCRIPTION — The 'F373 contains eight D-type latches with 3-state output buffers. When the Latch Enable (LE) input is HIGH, data on the D_n inputs enters the latches. In this condition the latches are transparent, i.e., a latch output will change state each time its D input changes. When LE is LOW the latches store the information that was present on the D inputs a setup time preceding the HIGH-to-LOW transition of LE. The 3-state buffers are controlled by the Output Enable ($\overline{OE}$) input. When $\overline{OE}$ is LOW, the buffers are in the bi-state mode. When $\overline{OE}$ is HIGH the buffers are in the high impedance mode but this does not interfere with entering new data into the latches.

© IC MASTER 1984

LOGIC DIAGRAM

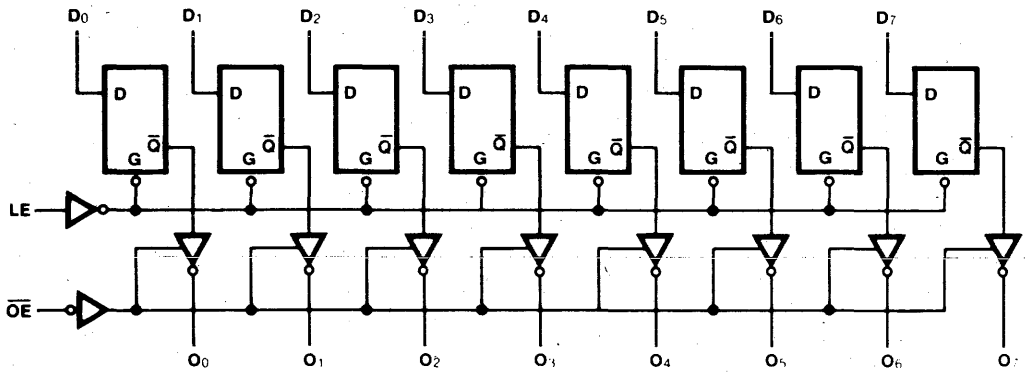

Please note that this diagram is provided only for the understanding of logic operations and should not be used to estimate propagation delays.

DC CHARACTERISTICS OVER OPERATING TEMPERATURE RANGE (unless otherwise specified)

SYMBOL	PARAMETER	54F/74F			UNITS	CONDITIONS
		Min	Typ	Max		
I_{CC}	Power Supply Current (All Outputs OFF)		35	55	mA	V_{CC} = Max, $\overline{OE}$ = 4.5 V D_n, LE = Gnd

AC CHARACTERISTICS:

SYMBOL	PARAMETER	54F/74F			54F		74F		UNITS
		T_A = +25°C, V_{CC} = +5.0 V, C_L = 50 pF			T_A, V_{CC} = MIL, C_L = 50 pF		T_A, V_{CC} = COM, C_L = 50 pF		
		Min	Typ	Max	Min	Max	Min	Max	
t_{PLH} t_{PHL}	Propagation Delay D_n to O_n	3.0 2.0	5.3 3.7	7.0 5.0	3.0 2.0	8.5 6.0	3.0 2.0	8.0 6.0	ns
t_{PLH} t_{PHL}	Propagation Delay LE to O_n	5.0 3.0	9.0 5.2	11.5 7.0	5.0 3.0	15 8.5	5.0 3.0	13 8.0	ns
t_{PZH} t_{PZL}	Output Enable Time	2.0 2.0	5.0 5.6	11 7.5	2.0 2.0	13.5 10	2.0 2.0	12 8.5	ns
t_{PHZ} t_{PLZ}	Output Disable Time	2.0 2.0	4.5 3.8	6.5 5.0	2.0 2.0	10 7.0	2.0 2.0	7.5 6.0	ns

AC OPERATING REQUIREMENTS:

SYMBOL	PARAMETER	54F/74F			54F		74F		UNITS
		T_A = +25° C, V_{CC} = +5.0 V			T_A, V_{CC} = MIL		T_A, V_{CC} = COM		
		Min	Typ	Max	Min	Max	Min	Max	
t_s (H) t_s (L)	Setup Time, HIGH or LOW D_n to LE	2.0 2.0			2.0 2.0		2.0 2.0		ns
t_h (H) t_h (L)	Hold Time, HIGH or LOW D_n to LE	3.0 3.0			3.0 3.0		3.0 3.0		ns
t_w (H)	LE Pulse Width HIGH	6.0			6.0		6.0		ns

© IC MASTER 1984

54F/74F374

OCTAL D-TYPE FLIP-FLOP (WITH 3-STATE OUTPUTS)

DESCRIPTION — The 'F374 is a high speed, low power octal D-type flip-flop featuring separate D-type inputs for each flip-flop and 3-state outputs for bus oriented applications. A buffered Clock (CP) and Output Enable ($\overline{OE}$) are common to all flip-flops.

- **EDGE-TRIGGERED D-TYPE INPUTS**
- **BUFFERED POSITIVE EDGE-TRIGGERED CLOCK**
- **3-STATE OUTPUTS FOR BUS ORIENTED APPLICATIONS**

CONNECTION DIAGRAM

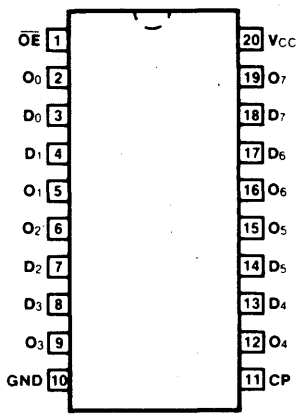

LOGIC SYMBOL

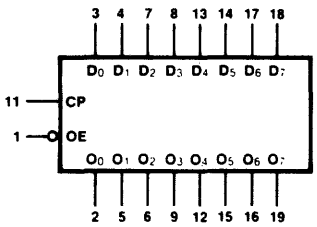

V_{CC} = Pin 20
GND = Pin 10

ORDERING CODE

PKGS	COMMERICAL GRADE V_{CC} = +5.0 V ±5%, T_A = 0°C to +70°C	MILITARY GRADE V_{CC} = +5.0 V ±10%, T_A = -55°C to +125°C	PKG TYPE
Plastic DIP (P)	74F374PC		9Z
Ceramic DIP (D)	74F374DC	54F374DM	4E
Flatpak (F)	74F374FC	54F374FM	4F

INPUT LOADING/FAN-OUT

PIN NAMES	DESCRIPTION	54F/74F (U.L.) HIGH/LOW
D_0-D_7	Data Inputs	0.5/0.375
CP	Clock Pulse Input (Active Rising Edge)	0.5/0.375
$\overline{OE}$	3-State Output Enable Input (Active LOW)	0.5/0.375
O_0-O_7	3-State Outputs	25/12.5

LOGIC DIAGRAM

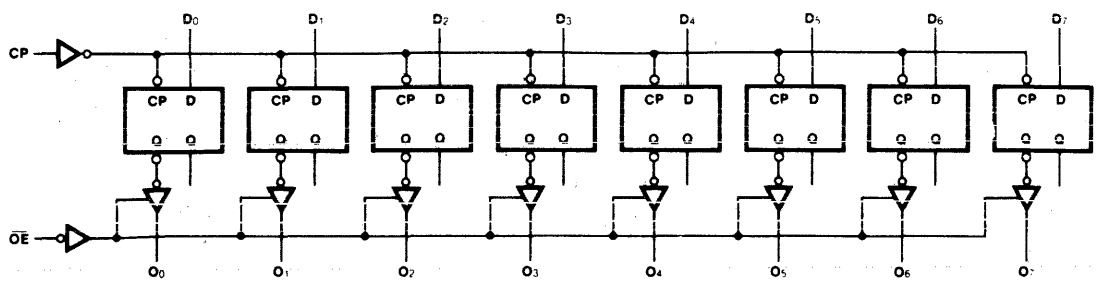

© IC MASTER 1984

FUNCTIONAL DESCRIPTION — The 'F374 consists of eight edge-triggered flip-flops with individual D-type inputs and 3-state true outputs. The buffered clock and buffered Output Enable are common to all flip-flops. The eight flip-flops will store the state of their individual D inputs that meet the setup and hold times requirements on the LOW-to-HIGH Clock (CP) transition. With the Output Enable ($\overline{OE}$) LOW, the contents of the eight flip-flops are available at the outputs. When the $\overline{OE}$ is HIGH, the outputs go to the high impedance state. Operation of the $\overline{OE}$ input does not affect the state of the flip-flops.

TRUTH TABLE

INPUTS		OUTPUTS	
D_n	CP	$\overline{OE}$	O_n
H	⎍	L	H
L	⎍	L	L
X	X	H	Z

H = HIGH Voltage Level
L = LOW Voltage Level
X = Immaterial
Z = High Impedance

DC CHARACTERISTICS OVER OPERATING TEMPERATURE RANGE (unless otherwise specified)

SYMBOL	PARAMETER	54F/74F Min	54F/74F Typ	54F/74F Max	UNITS	CONDITIONS
I_{CC}	Power Supply Current (All Outputs OFF)		55	86	mA	V_{CC} = Max, D_n = Gnd $\overline{OE}$ = 4.5 V

AC CHARACTERISTICS

SYMBOL	PARAMETER	54F/74F T_A = +25°C, V_{CC} = +5.0 V, C_L = 50 pF			54F T_A, V_{CC} = Mil, C_L = 50 pF		74F T_A, V_{CC} = Com, C_L = 50 pF		UNITS
		Min	Typ	Max	Min	Max	Min	Max	
f_{max}	Maximum Clock Frequency	100			60		70		MHz
t_{PLH}	Propagation Delay	4.0	6.5	8.5	4.0	10.5	4.0	10	ns
t_{PHL}	CP to O_n	4.0	6.5	8.5	4.0	11	4.0	10	
t_{PZH}	Output Enable Time	2.0	9.0	11.5	2.0	14	2.0	12.5	ns
t_{PZL}		2.0	5.8	7.5	2.0	10	2.0	8.5	
t_{PHZ}	Output Disable Time	2.0	5.3	7.0	2.0	8.0	2.0	8.0	ns
t_{PLZ}		2.0	4.3	5.5	2.0	7.5	2.0	6.5	

AC OPERATING REQUIREMENTS

SYMBOL	PARAMETER	54F/74F T_A = +25°C, V_{CC} = +5.0 V			54F T_A, V_{CC} = Mil		74F T_A, V_{CC} = Com		UNITS
		Min	Typ	Max	Min	Max	Min	Max	
t_s (H)	Setup Time, HIGH or LOW	2.0			2.5		2.0		ns
t_s (L)	D_n to CP	2.0			2.0		2.0		
t_h (H)	Hold Time, HIGH or LOW	2.0			2.0		2.0		
t_h (L)	D_n to CP	2.0			2.5		2.0		
t_w (H)	CP Pulse Width, HIGH or LOW	7.0			7.0		7.0		ns
t_w (L)		6.0			6.0		6.0		

54F/74F402
EXPANDABLE CYCLIC REDUNDANCY CHECK GENERATOR/CHECKER

CONNECTION DIAGRAM DIP (TOP VIEW)

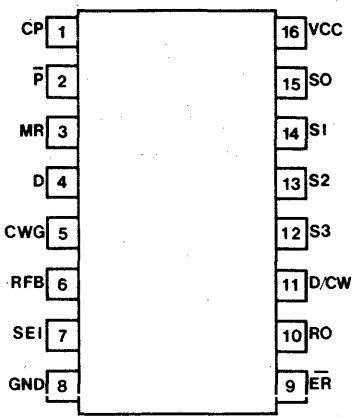

DESCRIPTION—The 'F402 expandable Cyclic Redundancy Check (CRC) Generator/Checker is an expandable version of the 'F401. It provides an advanced tool for the implementation of the most widely used error detection scheme in serial digital handling systems. A 4-bit control input selects one-of-six generator polynomials. The list of polynomials includes CRC-16, CRC-CCITT and Ethernet, as well as three other standard polynomials (56th order, 48th order, 32nd order). Individual clear and preset inputs are provided for floppy disk and other applications. The Error output indicates whether or not a transmission error has occurred. The CWG Control input inhibits feedback during check word transmission. The 'F402 is compatible with Fairchild Advanced Schottky TTL (FAST) devices and is fully compatible with all TTL families.

LOGIC SYMBOL

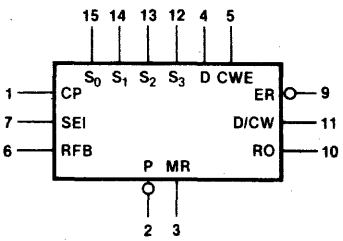

V_{CC} = Pin 16
GND = Pin 8

- **GUARANTEED 20 MHz DATA RATE**
- **SIX SELECTABLE POLYNOMIALS**
- **OTHER POLYNOMIALS AVAILABLE**
- **SEPARATE PRESET AND CLEAR CONTROLS**
- **EXPANDABLE**
- **AUTOMATIC RIGHT JUSTIFICATION**
- **ERROR OUTPUT OPEN COLLECTOR**
- **TYPICAL APPLICATIONS**
  - **FLOPPY AND OTHER DISK STORAGE SYSTEMS**
  - **DIGITAL CASSETTE AND CARTRIDGE SYSTEMS**
  - **DATA COMMUNICATION SYSTEMS**

PIN NAMES

PIN NAMES	DESCRIPTION	PIN NAMES	DESCRIPTION
S_0-S_3	Polynomial Select	CWG	Check Word Generate
P̄	Preset	D	Data
MR	Master Reset	ER̄	Error
SEI	Serial Expansion Input	RD	Register Output
CP	Clock	D/CW	Serial Data/Checkword
RFB	Register Feedback		

© IC MASTER 1984

FUNCTIONAL DESCRIPTION—The '74F402 Expandable Cyclic Redundancy Check (CRC) Generator/Checker is an expandable 16-bit programmable device which operates on serial data streams and provides a means of detecting transmission errors. Cyclic encoding and decoding schemes for error detection are based on polynomial manipulation in modulo arithmetic. For encoding, the data stream (message polynomial) is divided by a selected polynomial. This division results in a remainder (or residue) which is appended to the message as check bits. For error checking, the bit stream containing both data and check bits is divided by the same selected polynomial. If there are no detectable errors, this division results in a zero remainder. Although it is possible to choose many generating polynomials of a given degree, standards exist that specify a small number of useful polynomials. The '74F402 implements the polynomials listed in *Table 1* by applying the appropriate logic levels to the select pins S_0, S_1, S_2, and S_3.

BLOCK DIAGRAM

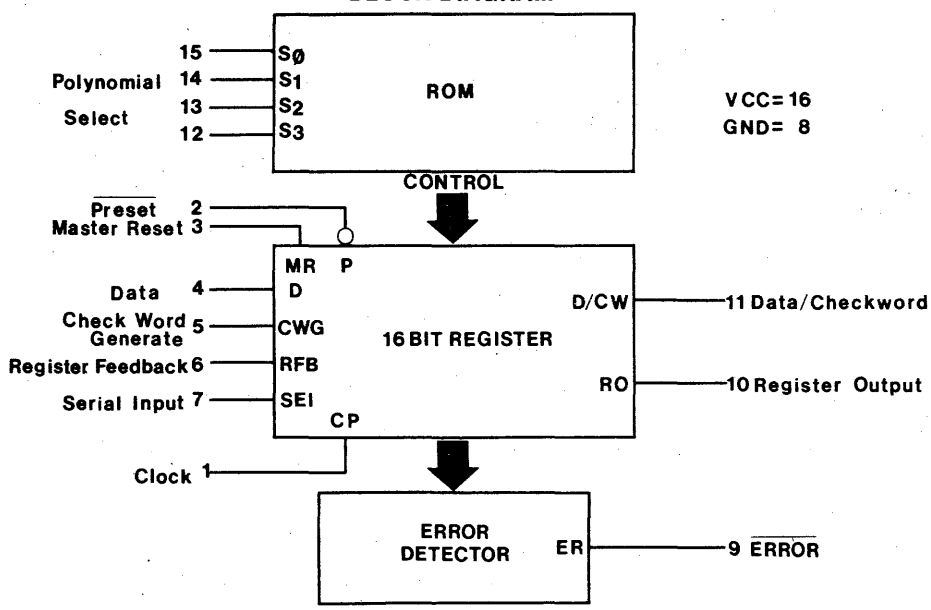

The '74F402 consists of a 16 bit register, a Read Only Memory (ROM) and associated control circuitry as shown in the Block Diagram. The polynomial control code presented at inputs S_0, S_1, S_2, and S_3 is decoded by the ROM, selecting the desired polynomial or part of a polynomial by establishing shift mode operation on the register with Exclusive OR (XOR) gates at appropriate inputs. To generate the check bits, the data stream is entered via the Data Inputs (D), using the Low-to-High transition of the Clock Input (CP). This data is gated with the most significant Register Output (RO) via the Register Feedback Input (RFB), and controls the XOR gates. The Check Word Generate (CWG) must be held High while the data is being entered. After the last data bit is entered, the CWG is brought Low and the check bits are shifted out of the register(s) and appended to the data bits (no external gating is needed).

To check an incoming message for errors, both the data and check bits are entered through the D Input with the CWG Input held High. The Error Output becomes valid after the last check bit has been entered into the '74F402 by a Low-to-High transition of CP, with the exception of the Ethernet polynomial (see applications paragraph). If no detectable errors have occurred during the data transmission, the resultant internal register bits are all Low and the Error Ouput ($\overline{ER}$) is High. If a detectable error has occurred, $\overline{ER}$ is Low. $\overline{ER}$ remains valid until the next Low-to-High transition of CP or until the device has been preset or reset.

A High on the Master Reset Input (MR) asynchronously clears the entire register. A Low on the Preset Input ($\overline{P}$) asynchronously sets the entire register with the exception of:

1) The Ethernet residue selection, in which the registers containing the non-zero residue are cleared;
2) The 56th order polynomial, in which the 8 least significant register bits of the least significant device are cleared; and,
3) S = 0, in which all bits are cleared.

TABLE 1

SELECT CODE HEX	S3	S2	S1	S0	POLYNOMIAL	REMARKS
0	L	L	L	L	0	S = 0
C	H	H	L	L	$X^{32}+X^{26}+X^{23}+X^{22}+X^{16}+$	Ethernet
D	H	H	L	H	$X^{12}+X^{11}+X^{10}+X^{8}+X^{7}+X^{5}+X^{4}+X^{2}+X+1$	Polynomial
E	H	H	H	L	$X^{32}+X^{31}+X^{27}+X^{26}+X^{25}+X^{19}+X^{16}+$	Ethernet
F	H	H	H	H	$X^{15}+X^{13}+X^{12}+X^{11}+X^{9}+X^{7}+X^{6}+X^{5}+X^{4}+X^{2}+X+1$	Residue
7	L	H	H	H	$X^{16}+X^{15}+X^{2}+1$	CRC—16
B	H	L	H	H	$X^{16}+X^{12}+X^{5}+1$	CRC—CCITT
3	L	L	H	H	$X^{56}+X^{55}+X^{49}+X^{45}+X^{41}+$	
2	L	L	H	L	$X^{39}+X^{38}+X^{37}+X^{36}+X^{31}+$	56th
4	L	H	L	L	$X^{22}+X^{19}+X^{17}+X^{16}+X^{15}+X^{14}+X^{12}+X^{11}+X^{9}+$	Order
8	H	L	L	L	$X5+X+1$	
5	L	H	L	H	$X^{48}+X^{36}+X^{35}+$	48th
9	H	L	L	H	$X^{23}+X^{21}+$	Order
1	L	L	L	H	$X^{15}+X^{13}+X^{8}+X^{2}+1$	
6	L	H	H	L	$X^{32}+X^{23}+X^{21}+$	32nd
A	H	L	H	L	$X^{11}+X^{2}+1$	Order

© IC MASTER 1984

TABLE 2

SELECT CODE	P3	P2	P1	PØ	C2	C1	CØ	POLYNOMIAL
Ø	Ø	Ø	Ø	Ø	1	Ø	Ø	S = Ø
C	1	1	1	1	1	Ø	1	Ethernet
D	1	1	1	1	1	Ø	1	Polynomial
E	Ø	Ø	Ø	Ø	Ø	Ø	Ø	Ethernet
F	Ø	Ø	Ø	Ø	Ø	1	Ø	Residue
7	1	1	1	1	1	Ø	Ø	CRC—16
B	1	1	1	1	1	Ø	Ø	CRC—CCITT
3	1	1	1	1	1	Ø	Ø	
2	1	1	1	1	1	Ø	Ø	56th
4	1	1	1	1	1	Ø	Ø	Order
8	Ø	Ø	1	1	1	Ø	Ø	
5	1	1	1	1	1	Ø	Ø	48th
9	1	1	1	1	1	Ø	Ø	Order
1	1	1	1	1	1	Ø	Ø	
6	1	1	1	1	1	Ø	Ø	32nd
A	1	1	1	1	1	Ø	Ø	Order

APPLICATIONS—In addition to polynomial selection there are four other capabilities provided for in the ROM. The first is set or clear selectability. The sixteen internal registers have the capability to be either set or cleared when $\overline{P}$ is brought low. This set or clear capability is done in four groups of 4 (see *Table 2*, PØ-P3). The second ROM capability (CØ) is in determining the polarity of the check word. As is the case with the Ethernet polynomial the check word can be inverted when it is appended to the data stream or as is the case with the other polynomials, the residue is appended with no inversion. Thirdly, the ROM contains a bit (C1) which is used to select the RFB input instead of the SEI input to be fed into the LSB. This is used when the polynomial selected is actually a residue (least significant) stored in the ROM. In conjunction with this is another bit (C2) in the ROM which indicates whether the selected location is a polynomial or a residue. If the latter then it inhibits the RFB input.

As mentioned previously, in general, upon a successful data transmission the CRC register has a zero residue. There is an exception to this, however, with respect to the Ethernet polynomial. This polynomial, upon a successful data transmission, has a non-zero residue in the CRC register $(C7\ 04\ DD\ 7B)_{16}$. In order to provide a no-error indication two ROM locations have been preloaded with the residue so that by selecting these locations and clocking the device one additional time, after the last check bit has been entered, will result in zeroing the CRC register. In this manner a no error indication is achieved.

With the present mix of polynomials the largest is 56th order requiring four devices while the smallest is 16th order requiring just one device. In order to accomodate multiplexing between high order polynomials (>16th order) and lower order polynomials, a location of all zero's is provided. This allows the user to choose a lower order polynomial even if the system is configured for a higher order one (see *Figure 3*).

FIG. 1
SINGLE DEVICE USAGE

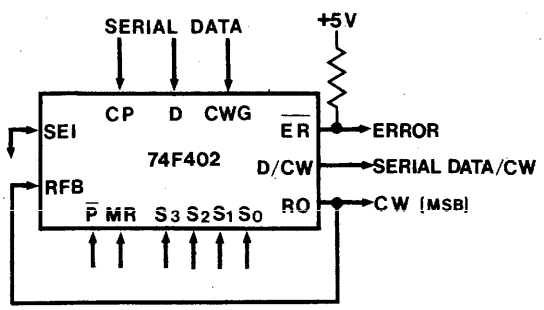

FIG. 2
MULTIPLE DEVICE USAGE

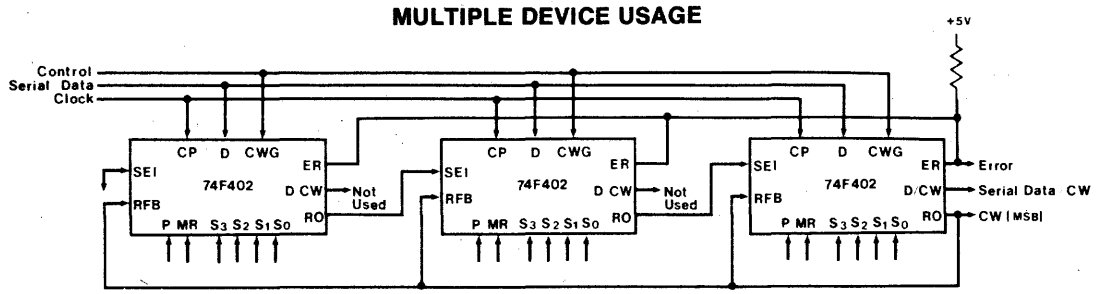

FIG. 3
32ND ORDER CONFIGURATION
CRC-16 IMPLEMENTATION

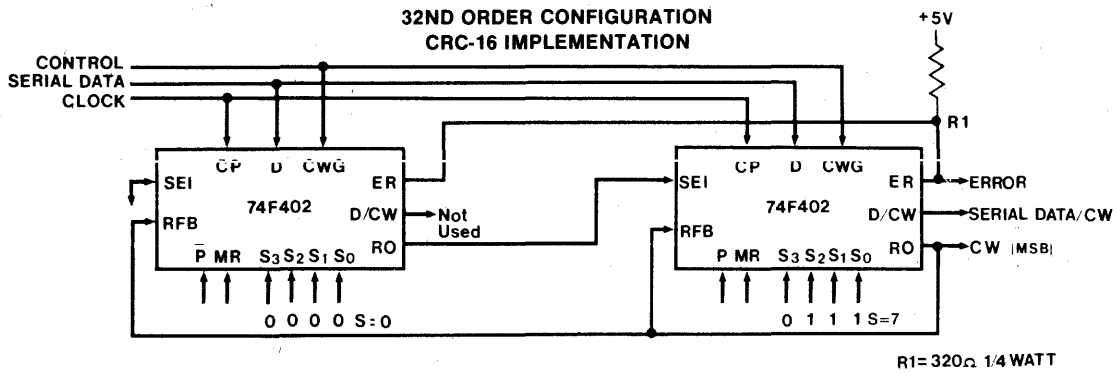

PIN NAMES

PIN NAMES	DESCRIPTION	COMMENTS
S_0-S_3	Polynomial Select	Used to select one of the six polynomials programmed into the device. See *Table 1* for a breakdown of the entries.
$\overline{P}$	Preset	When LOW asynchronously sets the entire register based on the polynomial selected. In the cases of the ethernet residue selection or the all zero selection the register would be cleared. With respect to the 56 bit polynomial, in the least significant device only, the eight most significant bits of the register are set, the remaining bits are cleared. In all other cases all bits of the register are set (See *Table 2*).
MR	Master Reset	When HIGH asynchronously clears all bits of the register.
SEI	Serial Expansion Input	This input provides the capability for serially expanding the devices to accomodate higher order polynomials. When cascading devices, RO of the preceding device is connected to this input. When a device is used singly or is the least significant device, this input should be wired LOW. See *Figures 1* and *2*.
CP	Clock	Controls all register changes on the LOW to HIGH transition.
RFB	Register Feedback	This input in connected to RO of the most significant device.
CWG	Check Word Generate	This input when held HIGH allows for generation of the check word or for checking a serial data stream for errors. Bringing this input LOW, after the last data bit has been entered, allows the check word bits to be shifted out of the register and be appended to the data bits.
D	Data	The input through which data and/or check bits are entered for check word generation/error detection.
$\overline{ER}$	Error	This open collector ouput, when LOW, indicates that the contents of the register are not zero. When checking for errors, after the data and check bits have been cycled through the device(s), this output should be HIGH to indicate no error in transmission. In multiple device configurations the $\overline{ER}$ outputs are tied together.
RO	Register Output	The output for the most significant bit of the check word register. It is used to supply control to either RFB or SEI.
D/CW	Serial Data/Checkword	This output is controlled by the state of CWG and the polynomial selected. When CWG is HIGH the D input is output; when CWG is LOW the check word register bits are shifted out. (Note: When the Ethernet polynomial is selected and CWG is LOW, the check word bits are inverted.)

© IC MASTER 1984

54F/74F403 • 54F/74F433

FIRST-IN FIRST OUT (FIFO) BUFFER MEMORY FAIRCHILD TTL MACROLOGIC

DESCRIPTION—The 'F403/F433 is an expanable fall-through type high-speed First-In First-Out (FIFO) Buffer Memory optimized for high speed disc or tape controllers and communication buffer applications. It is organized as 16 or 64 words by four bits and may be expanded to any number of words or any number of bits (in multiples of four). Data may be entered or extracted asynchronously in serial or parallel, allowing economical implementation of buffer memories.

Preliminary

The 'F403/F433 has 3-state outputs which provide added versatility and is fully compatible with all TTL families.

- **10 MHz SERIAL OR PARALLEL DATA RATE**
- **SERIAL OR PARALLEL INPUT**
- **SERIAL OR PARALLEL OUTPUT**
- **EXPANDABLE WITHOUT EXTERNAL LOGIC**
- **3-STATE OUTPUTS**
- **FULLY COMPATIBLE WITH ALL TTL FAMILIES**
- **SLIM 24-PIN PACKAGE**

LOGIC SYMBOL

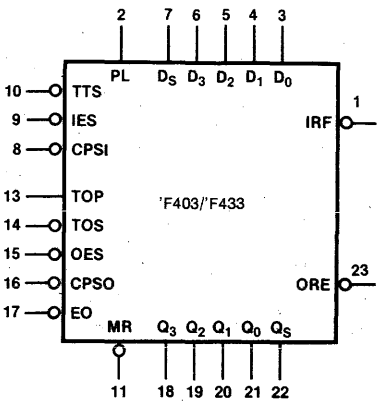

V_{CC} = Pin 24
GND = Pin 12

CONNECTION DIAGRAM

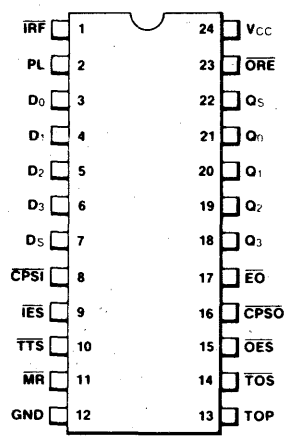

NOTE:
The Flatpak version has the same pinouts (Connection Diagram) as the Dual In-line Package.

BLOCK DIAGRAM

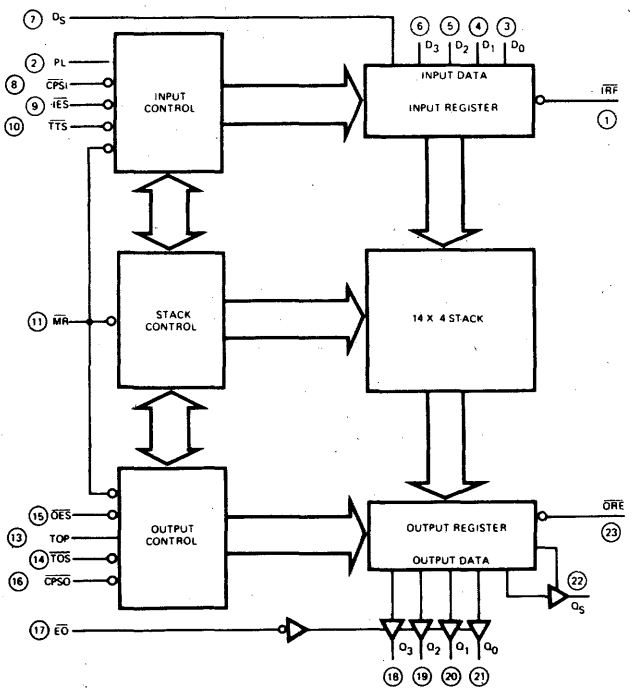

◯ = Pin Numbers

DIGITAL

Fairchild

PIN NAMES

PIN NAME	DESCRIPTION	COMMENTS
D_0—D_3	Parallel Data Inputs	
D_S	Serial Data Input	
PL	Parallel Load Input	HIGH on PL enables D_0—D_3. Not edge triggered. Ones catching.
$\overline{CPSI}$	Serial Input Clock	Edge triggered. Activates on falling edge.
$\overline{IES}$	Serial Input Enable	Enables serial and parallel input when LOW.
$\overline{TTS}$	Transfer to Stack Input	A LOW on this pin initiates fall through.
$\overline{OES}$	Serial Output Enable Input	Enables serial and parallel output when LOW.
$\overline{TOS}$	Transfer Out Serial Input	A LOW on this pin enables a word to be transferred from the stack to the output register. (TOP must be HIGH also for the transfer to occur). Not edge triggered.
TOP	Transfer Out Parallel Input	A HIGH on this pin enables a word to be transferred from the stack to the output register. ($\overline{TOS}$ must be LOW for the transfer to occur). Not edge triggered.
$\overline{MR}$	Master Reset	Active LOW.
$\overline{EO}$	Output Enable	Active LOW.
$\overline{CPSO}$	Serial Output Clock Input	Edge triggered. Activates on falling edge.
Q_0—Q_3	Parallel Data Outputs	
Q_S	Serial Data Output	
$\overline{IRF}$	Input Register Full Output	LOW when input register is full (Note b).
$\overline{ORE}$	Output Register Empty Output	HIGH when output register contains valid data.

FUNCTIONAL DESCRIPTION—As shown in the block diagram the 'F403/F433 consists of three sections:

1. An Input Register with parallel and serial data inputs as well as control inputs and outputs for input handshaking and expansion.
2. A 4-bit wide, 14 or 62 word deep fall-through stack with self-contained control logic.
3. An Output Register with parallel and serial data outputs as well as control inputs and outputs for output handshaking and expansion.

Since these three sections operate asynchronously and almost independently, they will be described separately below:

Input Register (Data Entry):
The Input Register can receive data in either bit-serial or in 4-bit parallel form. It stores this data until it is sent to the fall-through stack and generates the necessary status and control signals.

Figure 1 is a conceptual logic diagram of the input section. As described later, this 5-bit register is initialized by setting the F3 flip-flop and resetting the other flip-flops. The Q-output of the last flip-flop (FC) is brought out as the "Input Register Full" output ($\overline{IRF}$). After initialization this output is HIGH.

Parallel Entry—A HIGH on the PL input loads the D_0—D_3 inputs into the F_0—F_3 flip-flops and sets the FC flip-flop. This forces the $\overline{IRF}$ output LOW indicating that the input register is full. During parallel entry, the $\overline{CPSI}$ input must be LOW. If parallel expansion is not being implemented, $\overline{IES}$ must be LOW to establish row mastership (see Expansion section).

© IC MASTER 1984

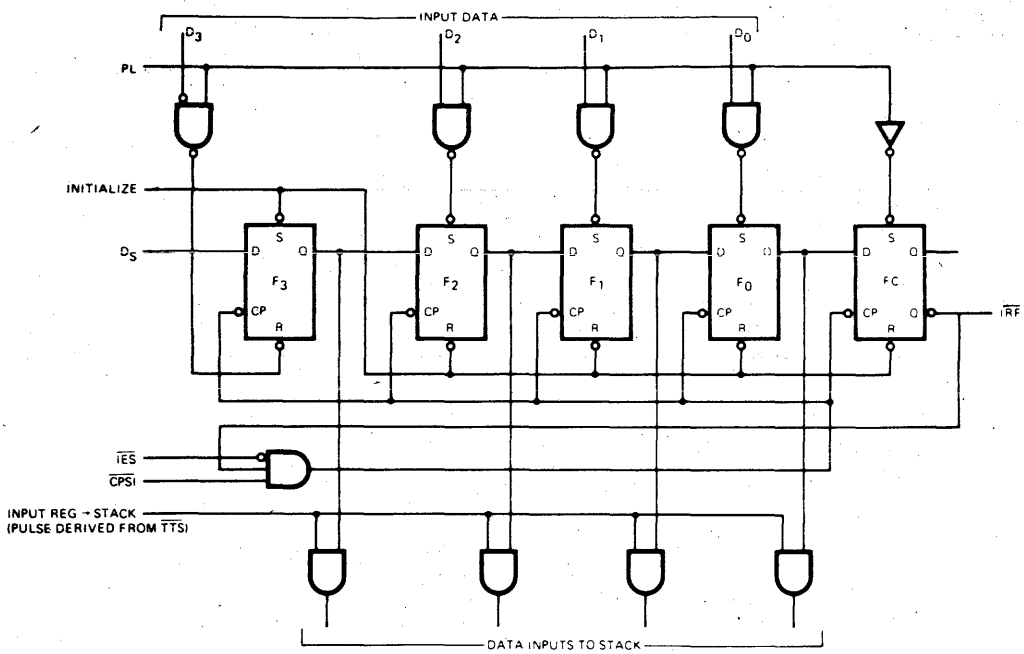

FIG. 1
CONCEPTUAL INPUT SECTION

Serial Entry—Data on the D_S input is serially entered into the F_3, F_2, F_1, F_0, FC shift register on each HIGH-to-LOW transition of the CPSI clock input, provided IES and PL are LOW.

After the fourth clock transition, the four data bits located in the four flip-flops F_0—F_3. The FC flip-flop is set, forcing the $\overline{IRF}$ output LOW and interanlly inhibiting $\overline{CPSI}$ clock pulses from effecting the register. *Figure 2* illustrates the final positions in a 'F403 resulting from a 64-bit serial bit train. B_0 is the first bit, B_{63} the last bit. Similar operation can be developed for 'F433.

Transfer to the Stack—The outputs of Flip-Flops F_0—F_3 feed the stack. A LOW level on the $\overline{TTS}$ input initiates a "fall-through" action. If the top location of the stack is empty, data is loaded into the stack and the input register is re-initialized. Note that this initialization is postponed until PL is LOW again. Thus, automatic FIFO action is achieved by connecting the $\overline{IRF}$ output to the $\overline{TTS}$ input.

An RS Flip-Flop (the Request Initialization Flip-Flop shown in *Figure 10*) in the control section records the fact that data has been transferred to the stack. This prevents multiple entry of the same word into the stack despite the fact the $\overline{IRF}$ and $\overline{TTS}$ may still be LOW. The Request Initialization Flip-Flop is not cleared until PL goes LOW. Once in the stack, data falls through the stack automatically, pausing only when it is necessary to wait for an empty next location. In the 'F403, as in most modern FIFO designs, the $\overline{MR}$ input only initializes the stack control section and does not clear the data.

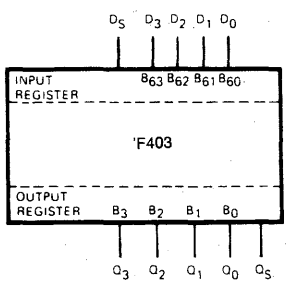

FIG. 2
FINAL POSITIONS IN A 'F403 RESULTING FROM A 64-BIT SERIAL TRAIN

Output Register (Data Extraction)—The Output Register receives 4-bit parallel data words from the bottom stack location, stores it and outputs data on a 3-state 4-bit data bus or on a 3-bit serial data bus. The output section generates and receives the necessary status and control signals. *Figure 3* is conceptual logic diagram of the output section.

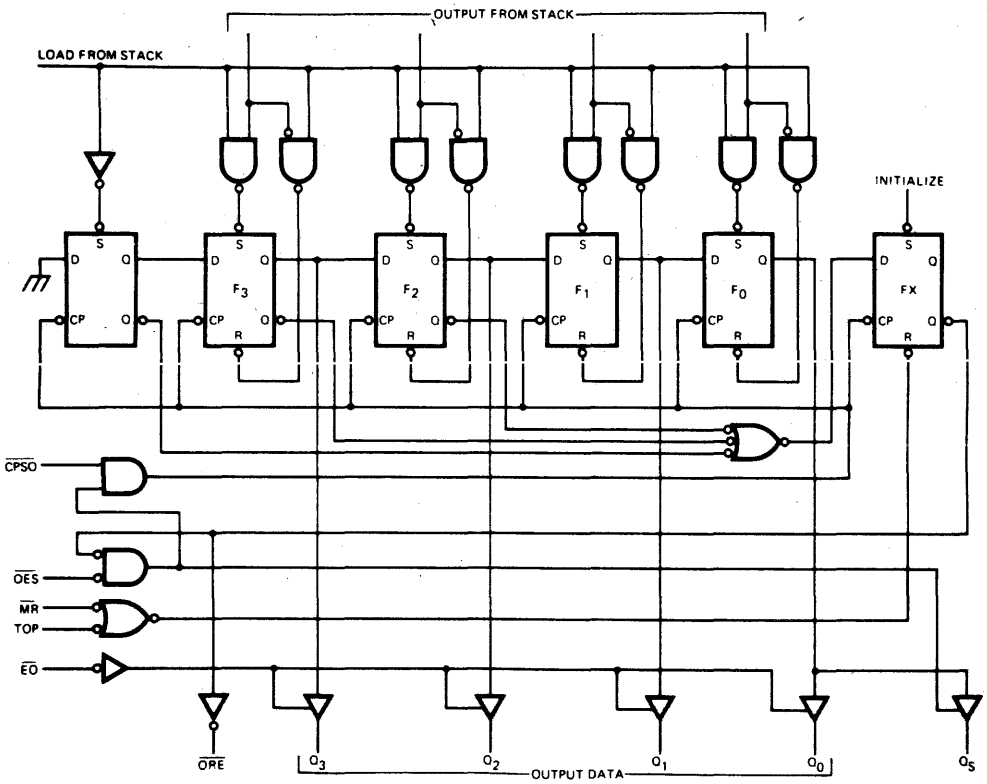

FIG. 3
CONCEPTUAL OUTPUT SECTION

Parallel Data Extraction—When the FIFO is empty after a LOW pulse is applied to $\overline{MR}$, the Output Register Empty ($\overline{ORE}$) output is LOW. After data has been entered into the FIFO and has fallen through to the bottom stack location, it is transferred into the Output Register provided the "Transfer Out Parallel" (TOP) input is HIGH. As a result of the data transfer $\overline{ORE}$ goes HIGH, indicating valid data on the data outputs (provided the 3-state buffer is enabled). TOP can now be used to clock out the next word. When TOP goes LOW, $\overline{ORE}$ will go LOW indicating that the output data has been extracted, but the data itself remains on the output bus until the next HIGH level at TOP permits the transfer of the next word (if available) into the Output Register. During parallel data extraction $\overline{CPSO}$ should be LOW. $\overline{TOS}$ should be grounded for single slice operation or connected to the appropriate $\overline{ORE}$ for expanded operation (see Expansion section).

TOP is not edge triggered. Therefore, if TOP goes HIGH before data is available from the stack, but data does become available before TOP goes LOW again, that data will be transferred into the Output Register. However, internal control circuitry prevents the same data from being transferred twice. If TOP goes HIGH and returns to LOW before data is available from the stack, ORE remains LOW indicating that there is no valid data at the outputs.

Serial Data Extraction—When the FIFO is empty after a LOW pulse is applied to $\overline{MR}$, the Output Register Empty ($\overline{ORE}$) output is LOW. After data has been entered into the FIFO and has fallen through to the bottom stack location, it is transferred into the Output Register provided $\overline{TOS}$ is LOW and TOP is HIGH. As a result of the data transfer $\overline{ORE}$ goes HIGH indicating valid data in the register. The 3-state Serial Data Output, Q_S: is automatically enabled and puts the first data bit on the output bus. Data is serially shifted out on the HIGH-to-LOW transition of $\overline{CPSO}$. To prevent false shifting, $\overline{CPSO}$ should be LOW when the new word is being loaded into the Output Register. The fourth transition empties the shift register, forces $\overline{ORE}$ output LOW and disables the serial output, Q_S (refer to *Figure 3*). For serial operation the $\overline{ORE}$ output may be tied to the $\overline{TOS}$ input, requesting a new word from the stack as soon as the previous one has been shifted out.

© IC MASTER 1984

Horizontal and Vertical Expansion—The 'F403 and 'F433 can be expanded in both the horizontal and vertical directions without any external parts and without sacrificing any of its FIFO's flexibility for serial/parallel input and output. The interconnections necessary to form a 31-word by 16-bit FIFO are shown in *Figure 4*. Using the same technique, any FIFO of (15m + 1) words by (4n) bits can be constructed, where m is the number of devices in a cloumn and n is the number of devices in a row.

Figures 5 and *6* show the timing diagrams for serial data entry and extraction for the 31-word by 16-bit FIFO shown in *Figure 4*. The final position of data after serial insertion of 496 bits into the FIFO array of *Figure 4* is shown in *Figure 7*.

All applications shown for 'F403 can be adapted to the 'F433 with the depth of the stack being 64 locations rather than the 16 locations of 'F403.

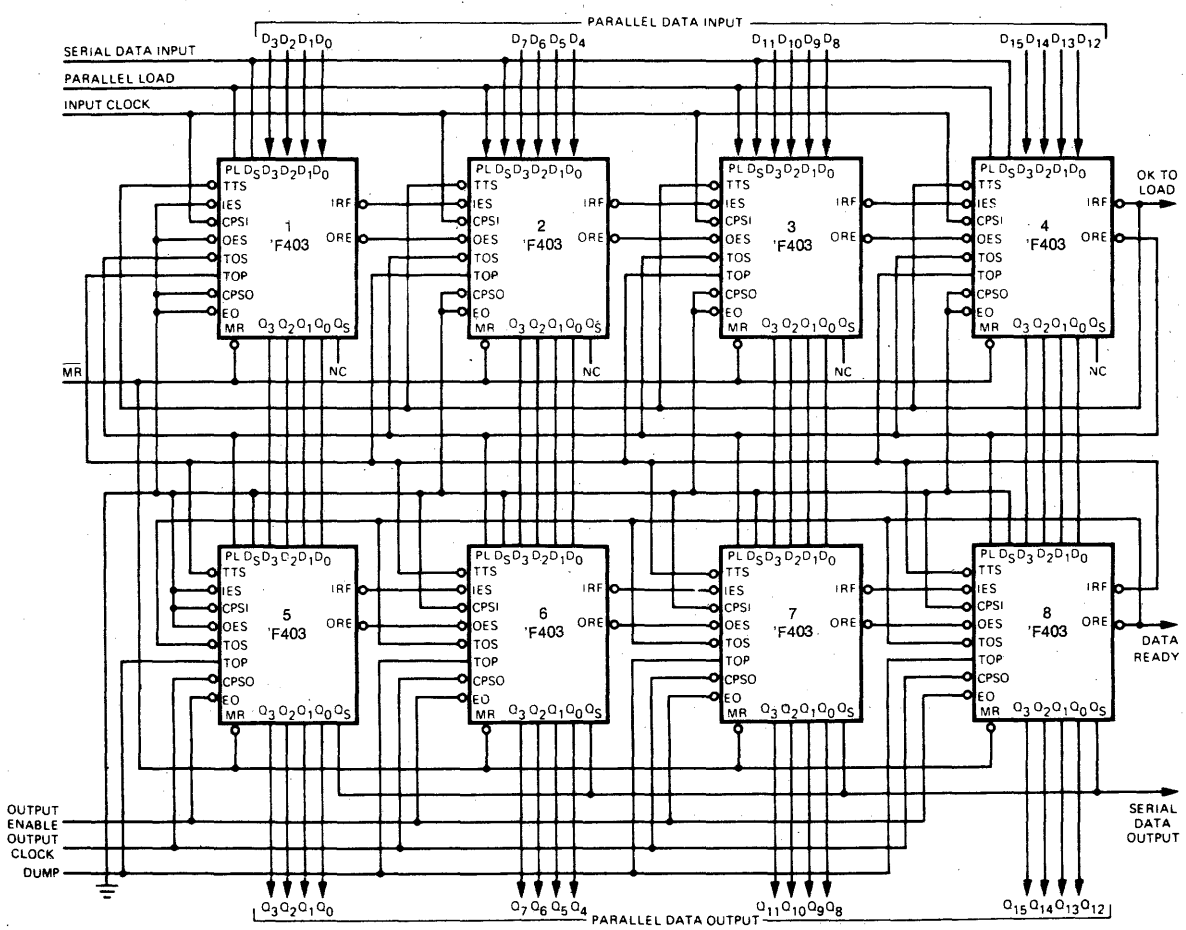

FIG. 4
A 31 X 16 FIFO ARRAY

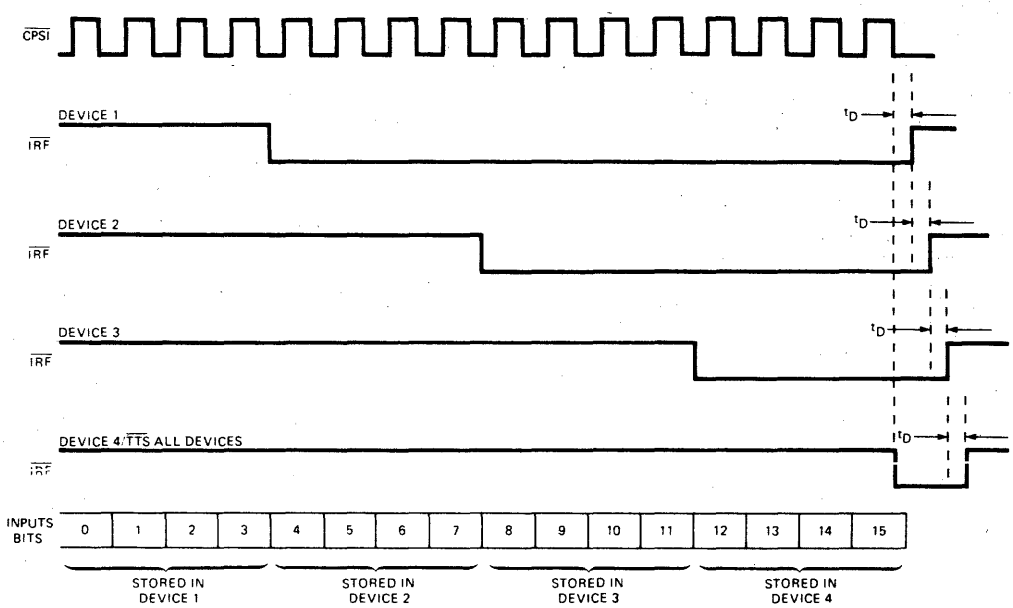

FIG. 5
SERIAL DATA ENTRY FOR ARRAY OF FIG. 6

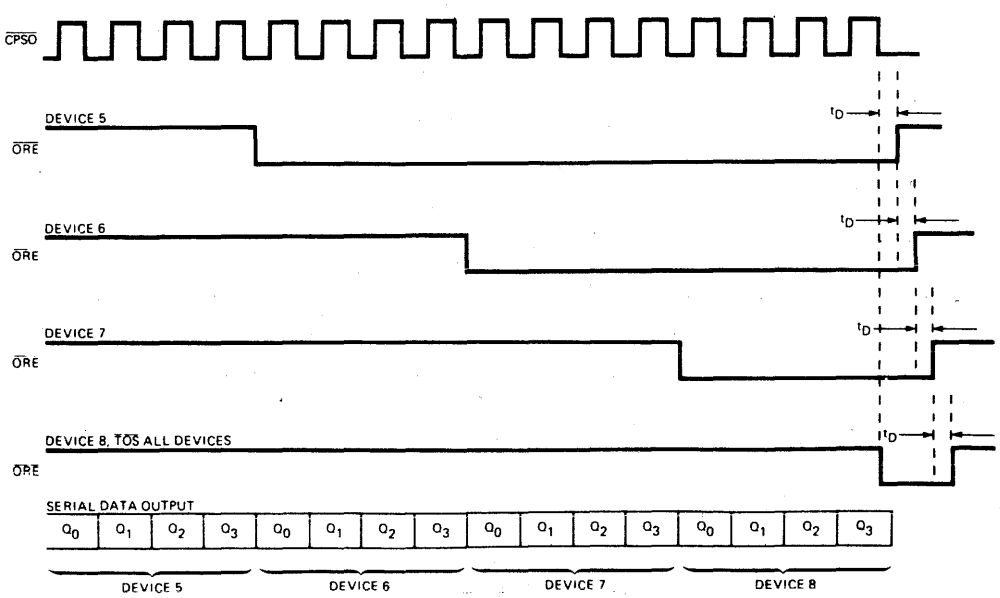

FIG. 6
SERIAL DATA EXTRACTION FOR ARRAY FOR FIG. 6

© IC MASTER 1984

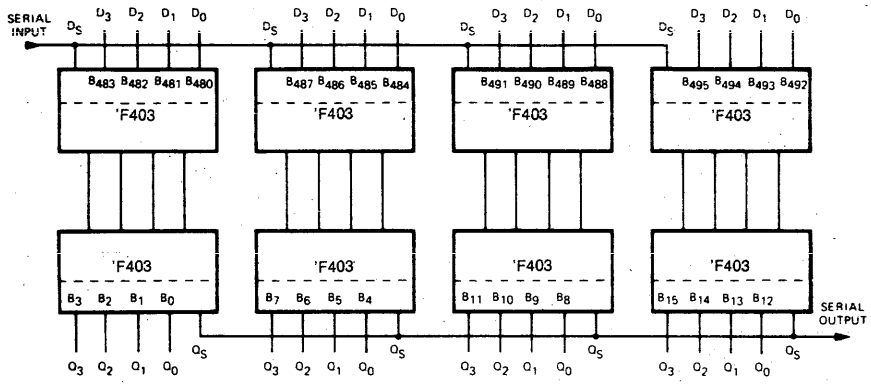

FIG. 7
FINAL POSITION OF A 496-BIT SERIAL INPUT

Interlocking Circuitry—Most convential FIFO designs provide status signals analogous to $\overline{IRF}$ and $\overline{ORE}$. However, when these devices are operated in arrays, variations in unit to unit operating speed require external gating to assure all devices have completed an operation. The 'F403 incorporates simple but effective "master/slave" interlocking circuitry to eliminate the need for external gating.

In the 'F403 array of *Figure 4* devices 1 and 5 are defined as "row masters" and the other devices are slaves to the master in their row. No slave in a given row will intialize its Input Register until it has received LOW on its $\overline{IES}$ input from a row master or a slave of higher priority.

In a similar fashion, the $\overline{ORE}$ outputs of slaves will not go high until their $\overline{OES}$ inputs have gone HIGH. This interlocking scheme ensures that new input data may be accepted by the array when the $\overline{IRF}$ output of the final slave in that row goes LOW and that output data for the array may be extracted when the $\overline{ORE}$ of the final slave in the output row goes HIGH.

The row master master is established by connecting its $\overline{IES}$ input to ground while a slave receives its $\overline{IES}$ input from the $\overline{IRF}$ output of the next higher priority device. When an array of 'F403 FIFOs is intialized with a LOW on the $\overline{MR}$ inputs of all devices, the $\overline{IRF}$ outputs of all devices will be HIGH. Thus, only the row master receives a LOW on the $\overline{IES}$ input during initialization. *Figure 8* is a conceptual logic diagram of the internal circuitry which determines master/slave operation. Whenever $\overline{MR}$ and $\overline{IES}$ are LOW, the Master Latch is set. Whenever $\overline{TTS}$ goes LOW the Request Initialization Flip-Flop will be set. If the Master Latch is HIGH, the Input Register will be immediately initialized and the Request Initialization Flip-Flop reset. If the Master Latch is reset, the Input Register is not initialized until $\overline{IES}$ goes LOW. In array operation, activating the $\overline{TTS}$ initiates a ripple input register initialization from the row master of the last slave.

A similar operation takes place for the output register. Either a $\overline{TOS}$ or TOP input intiates a load-from-stack operation and sets the ORE Request Flip-Flop. If the Master Latch is set, the last Output Register Flip-Flop is set and $\overline{ORE}$ goes HIGH. If the Master Latch is reset, the $\overline{ORE}$ output will be LOW until an $\overline{OES}$ input is received.

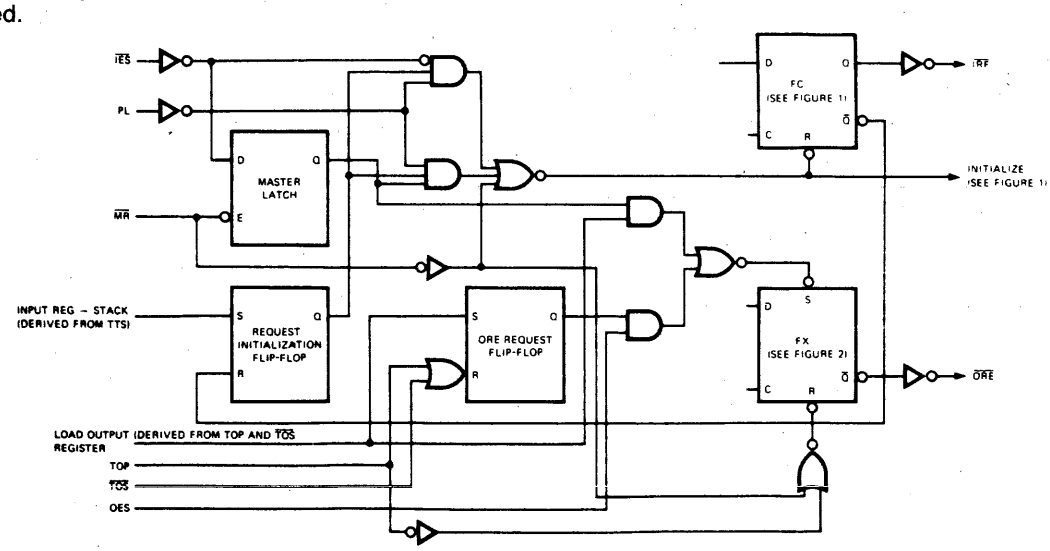

FIG. 8
CONCEPTUAL DIAGRAM, INTERLOCKING CIRCUITRY

54F/74F413

FIRST-IN FIRST-OUT (FIFO) 64 x 4 SERIAL MEMORY

DESCRIPTION — The 'F413 is an expandable "fall-through" high speed First-In First-Out (FIFO) memory organized 64 words by 4-bit. A 10 MHz data rate allows usage in high speed tape or disc controllers and communication buffer applications.

- **10 MHz SHIFT IN, SHIFT OUT GUARANTEED RATES**
- **TTL INPUTS AND OUTPUTS**
- **READILY EXPANDABLE IN WORD AND BIT DIMENSIONS**
- **OUTPUT PINS DIRECTLY OPPOSITE CORRESPONDING INPUT PINS**
- **ASYNCHRONOUS OR SYNCHRONOUS OPERATION**
- **PIN COMPATIBLE WITH MMI'S 67401 FIFO AND FASTER**

CONNECTION DIAGRAM

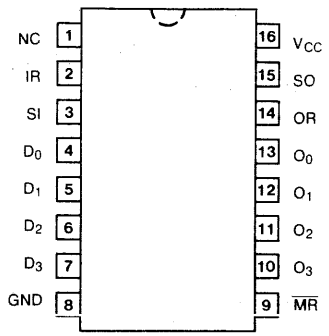

LOGIC SYMBOL

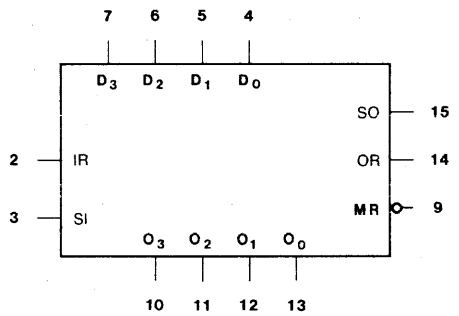

V_{CC} = Pin 16
GND = Pin 8

ORDERING CODE

PKGS	COMMERICAL GRADE	MILITARY GRADE	PKG TYPE
	V_{CC} = +5.0 V ±5%, T_A = 0°C to +70°C	V_{CC} = +5.0 V ±10%, T_A = -55°C to +125°C	
Plastic DIP (P)	74F413PC		9B
Ceramic DIP (D)	74F413DC	54F413DM	6B
Flatpak (F)		54F413FM	4L

© IC MASTER 1984

FUNCTIONAL DESCRIPTION — DATA INPUT - Data is entered into the FIFO on D_0-D_3 inputs. To enter data the Input Ready (IR) should be HIGH, indicating that the first location is ready to accept data. Data then present at the four data inputs is entered into the first location when the Shift In (SI) is brought HIGH. A SI HIGH signal causes the IR to go LOW. Data remains at the first location until SI is brought LOW. When SI is brought LOW and the FIFO is not full, IR will go HIGH, indicating that more room is available. Simultaneously, data will propagate to the second location and continue shifting until it reaches the output stage or a full location. If the memory is full, IR will remain LOW.

DATA TRANSFER - Once data is entered into the second cell, the transfer of any full cell to the adjacent (downstream) empty cell is automatic, activated by an on-chip control. Thus data will stack up at the end of the device while empty locations will "bubble" to the front. t_{PT} defines the time required for the first data to travel from input to the output of a previously empty device.

DATA OUTPUT - Data is read from the O_0-O_3 outputs. When data is shifted to the output stage, Output Ready (OR) goes HIGH, indicating the presence of valid data. When the OR is HIGH, data may be shifted out by bringing the Shift Out (SO) HIGH. A HIGH signal at SO causes the OR to go LOW. Valid data is maintained while the SO is HIGH. When SO is brought LOW the upstream data, provided that stage has valid data, is shifted to the output stage. When new valid data is shifted to the output stage, OR goes HIGH. If the FIFO is emptied, OR stays LOW, and O_0-O_3 remains as before, (i.e. data does not change if FIFO is empty).

Input Ready and Output Ready may also be used as status signals indicating that the FIFO is completely full (Input Ready stays LOW for at least t_{PT}) or completely empty (Output Ready stays LOW for at least t_{PT}).

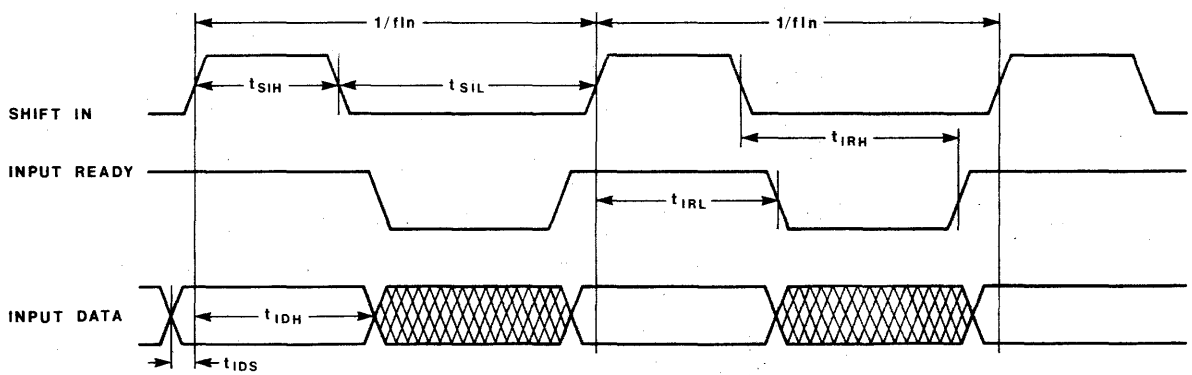

FIGURE 1. INPUT TIMING

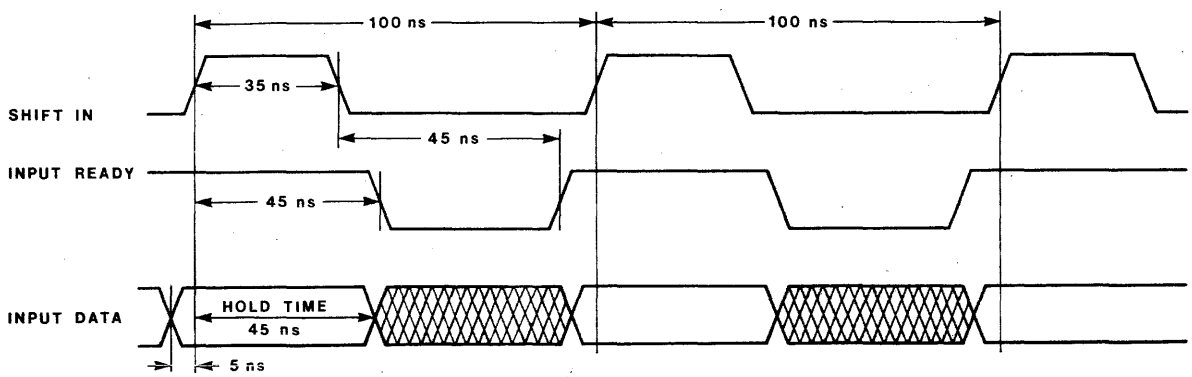

FIGURE 2. TYPICAL WAVEFORMS FOR 10 MHz SHIFT IN DATA RATE

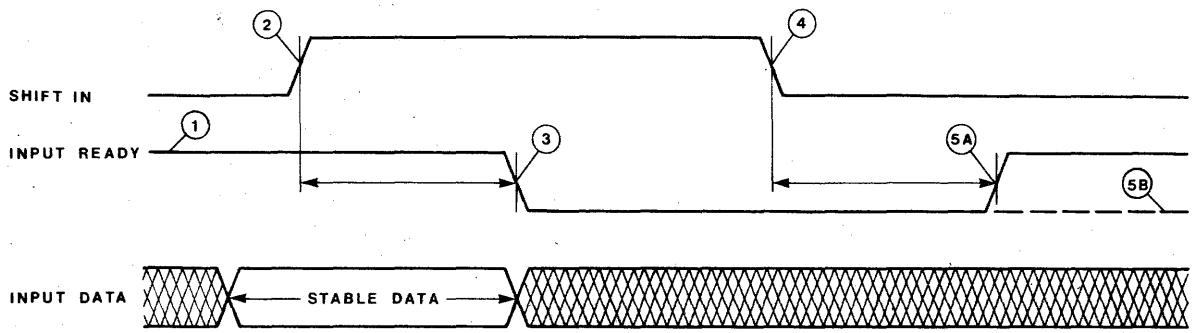

FIGURE 3. THE MECHANISM OF SHIFTING DATA INTO THE FIFO

(1) Input Ready HIGH indicates space is available and a Shift In pulse may be applied.
(2) Input Data is loaded into the first word.
(3) Input Ready goes LOW indicating the first word is full.
(4) The Data from the first word is released for "fall-through" to second word.
(5A) The Data from the first word is transferred to second word. The First word is now empty as indicated by Input Ready HIGH.
(5B) If the second word is already full then the data remains at the first word. Since the FIFO is now full Input Ready remains low.
NOTE: Shift in pulses applied while Input Ready is LOW will be ignored (See Figure 5).

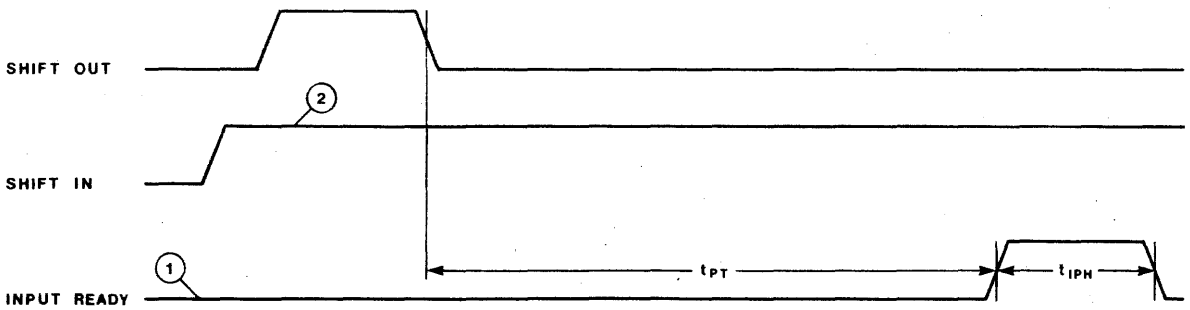

FIGURE 4. t_{IPH} SPECIFICATION

(1) FIFO is initally full.
(2) Shift In held HIGH.

© IC MASTER 1984

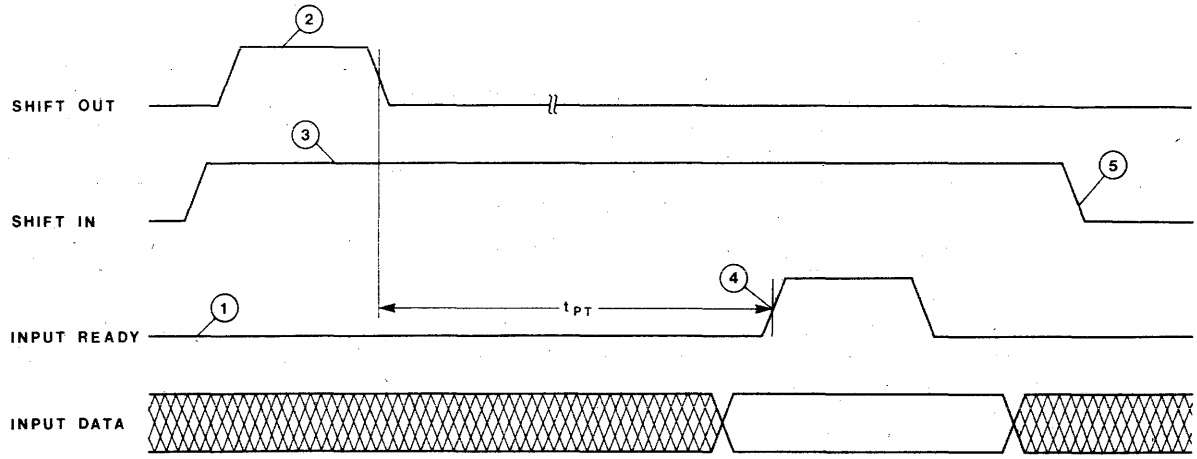

FIGURE 5. DATA IS SHIFTED IN WHENEVER SHIFT IN AND INPUT READY ARE BOTH HIGH

(1) FIFO is initially full.
(2) Shift Out pulse is applied. An empty location start "bubbling" to the front.
(3) Shift In is held HIGH.
(4) As soon as Input Ready becomes HIGH the Input Data is loaded into the first word.
(5) The Data from the first word is released for "fall through" to second word.

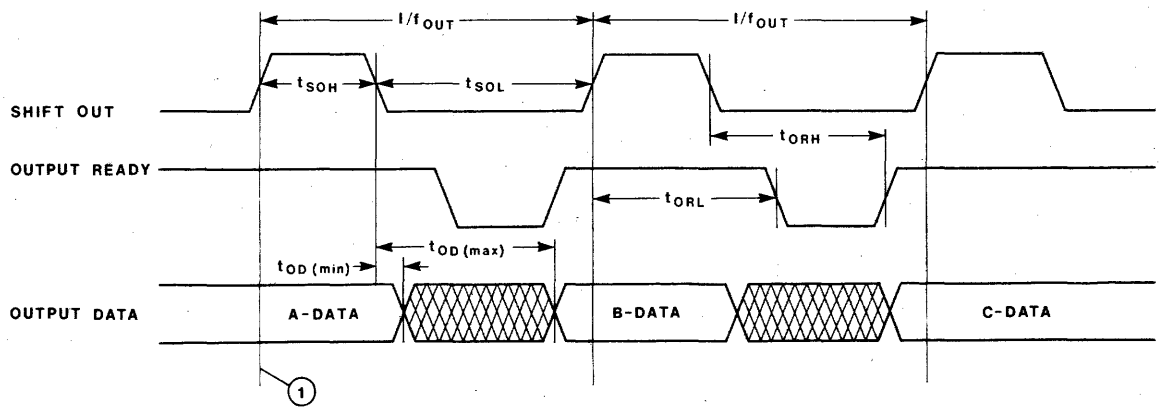

FIGURE 6. OUTPUT TIMING

(1) The diagram assumes, that at this time, words 63, 62, 61 are loaded with A, B, C Data, respectively.

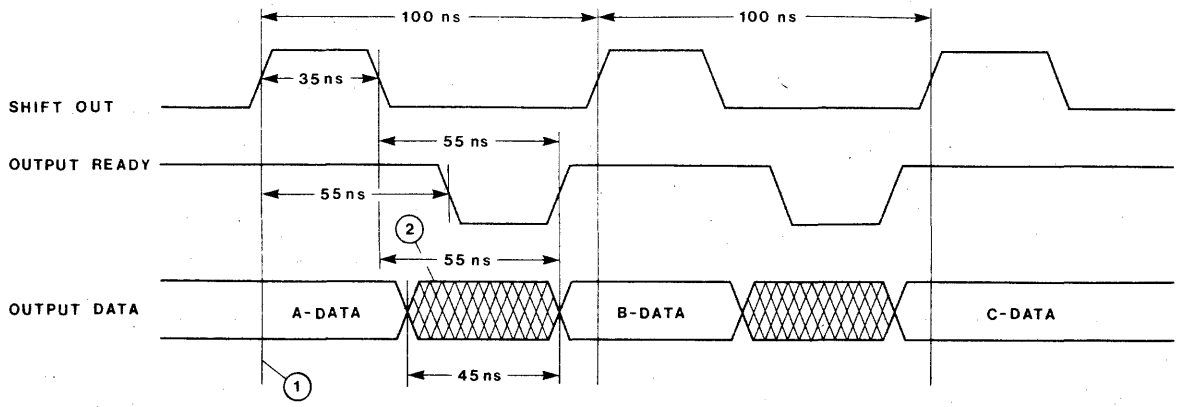

FIGURE 7. TYPICAL WAVEFORMS FOR 10 MHz SHIFT OUT DATA RATE

(1) The diagram assumes, that at this time, words 63, 62, 61 are loaded with A, B, C Data, respectively.

(2) Data in the crosshatched region may be A or B Data.

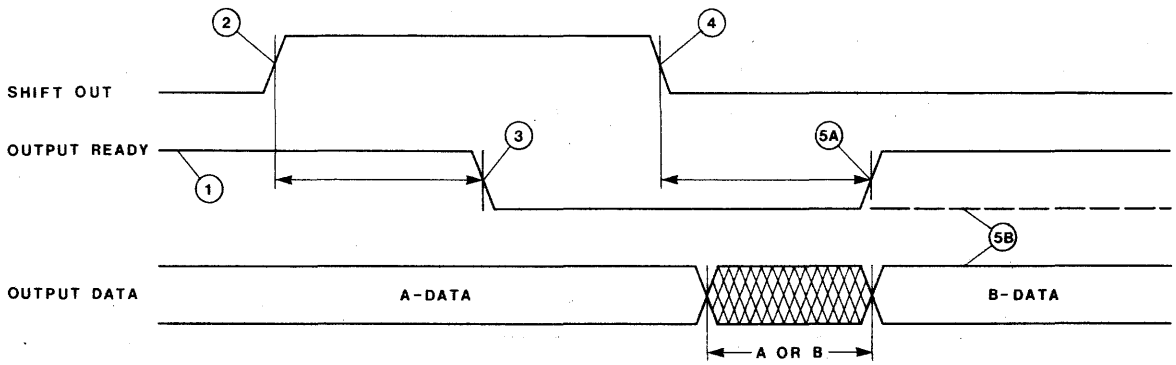

FIGURE 8. THE MECHANISM OF SHIFTING DATA OUT OF THE FIFO

(1) Output Ready HIGH indicates that data is available and a Shift Out pulse may be applied.

(2) Shift Out goes HIGH causing the next step.

(3) Output Ready goes LOW.

(4) Contents of word 62 (B-DATA) is released for "fall through" to word 63.

(5A) Output Ready goes HIGH indicating that new data (B) is now available at the FIFO outputs.

(5B) If the FIFO has only one word loaded (A-DATA) then Input Ready stays LOW and the A-DATA remains unchanged at the outputs.

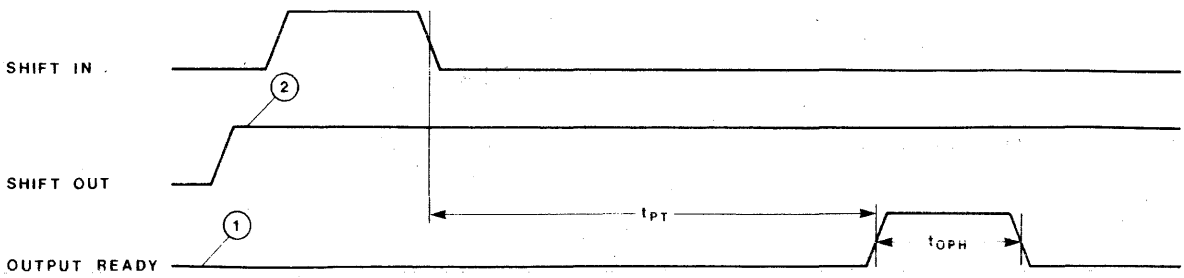

FIGURE 9. t_{PT} AND t_{OPH} SPECIFICATION

(1) FIFO initially empty.

(2) Shift Out held HIGH.

© IC MASTER 1984

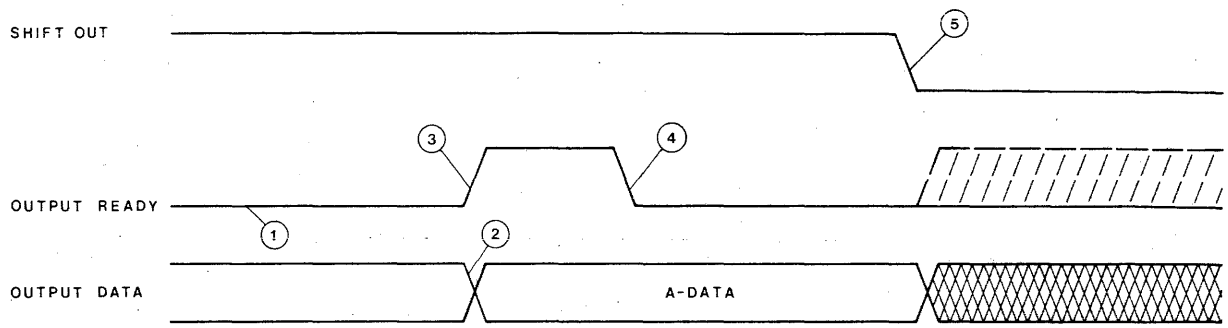

FIGURE 10. DATA IS SHIFTED OUT WHENEVER SHIFT OUT AND OUTPUT READY ARE BOTH HIGH

(1) Word 63 is empty.

(2) New data (A) arrives at the outputs (word 63).

(3) Output Ready goes HIGH indicating the arrival of the new data.

(4) Since Shift Out is held HIGH. Output Ready goes immediately LOW.

(5) As soon as Shift Out goes LOW the Output Data is subject to change as shown by the dashed line on Output Ready.

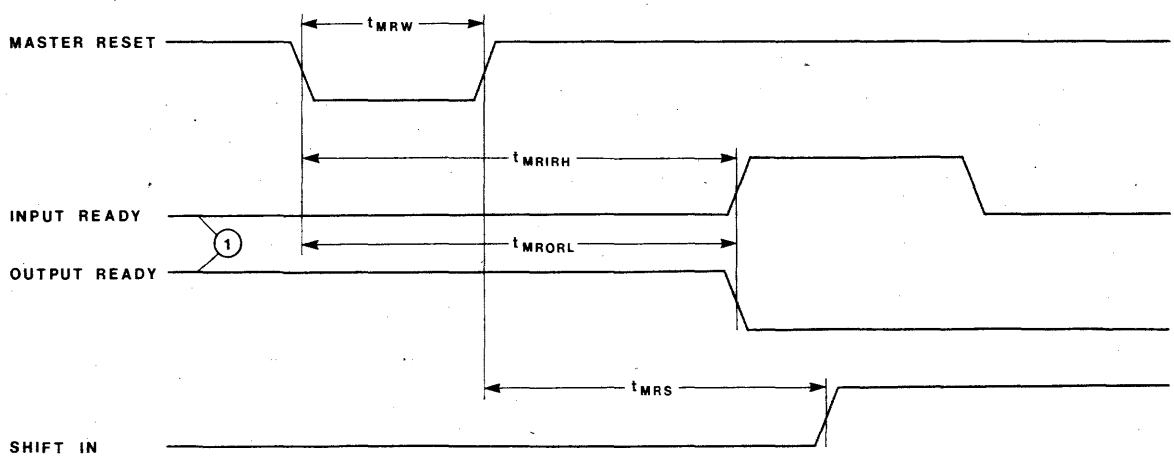

FIGURE 11. MASTER RESET TIMING

(1) FIFO initially full.

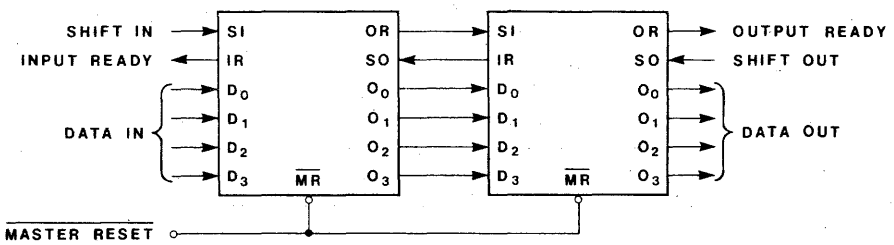

FIGURE 12. CASCADING FIFOS TO FORM 128 x 4 FIFO

FIFOs can be easily cascaded to any desired depth. The handshaking and associated timing between the FIFOs are handled by the FIFOs themselves.

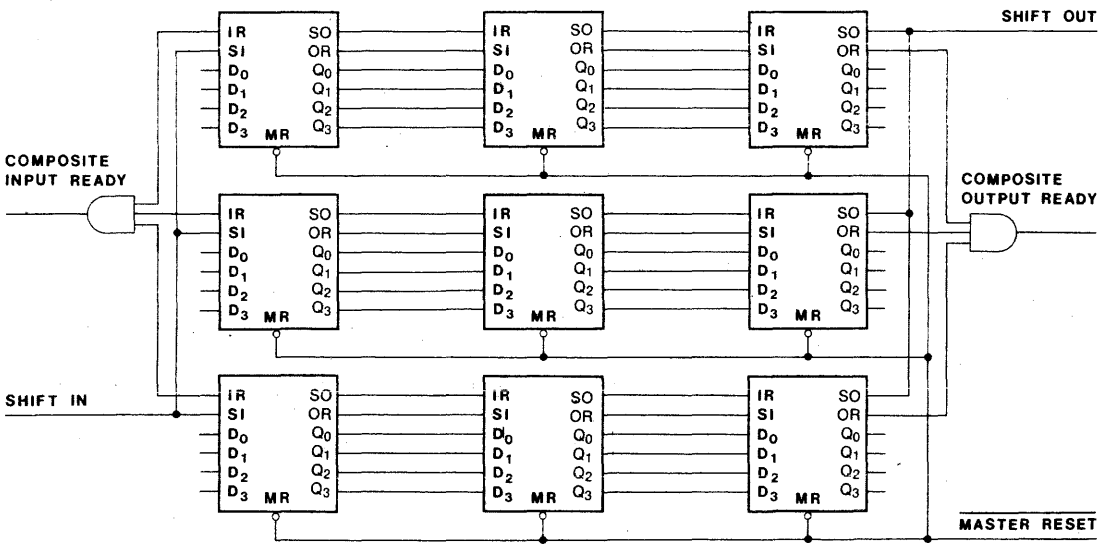

FIGURE 13. 192 x 12 FIFO

FIFOs are expandable in depth and width. However, in forming wider words two external gates are required to generate composite Input and Output Ready flags. This need is due to the different fall through times of the FIFOs.

© IC MASTER 1984

54F/74F418

32-BIT MEMORY ERROR DETECTION AND CORRECTION CIRCUIT

DESCRIPTION — The 'F418 memory Error Detection And Correction (EDAC) circuit contains the logic to generate seven check bits on a 32-bit data field, according to a modified Hamming code. The check bits are then stored in memory with the data word. On a subsequent read from memory, the device will detect and correct any single-bit data error, and detect any double-bit error.

The 'F418 is fully compatible with all TTL families. Data and check-bit signals are bidirectional 3-state lines.

Preliminary

- **INCREASES MEMORY SYSTEM RELIABILITY**
- **CORRECTS SINGLE-BIT ERRORS**
- **DETECTS DOUBLE-BIT ERRORS**

CONNECTION DIAGRAM

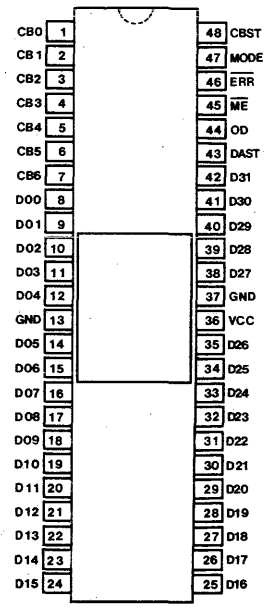

LOGIC SYMBOL

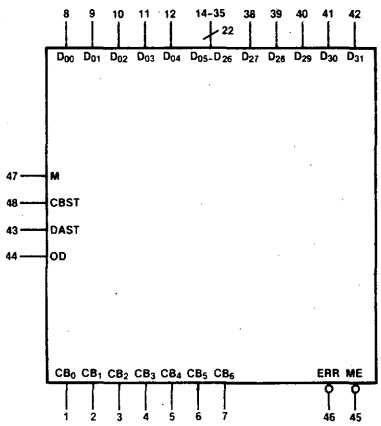

V_{CC} = Pin 36
GND = Pins 13, 37

PIN NAMES

PIN NAME	DESCRIPTION	COMMENTS
D_{00}—D_{31}	Data I/O Lines	
CB_0—CB_6	Check Bit I/O Lines	
DAST	Data Strobe	
OD	Output Disable	
$\overline{ME}$	Multiple Error	
$\overline{ERR}$	Error	
MODE	Mode	
CBST	Check Bit Strobe	

LOGIC DIAGRAM

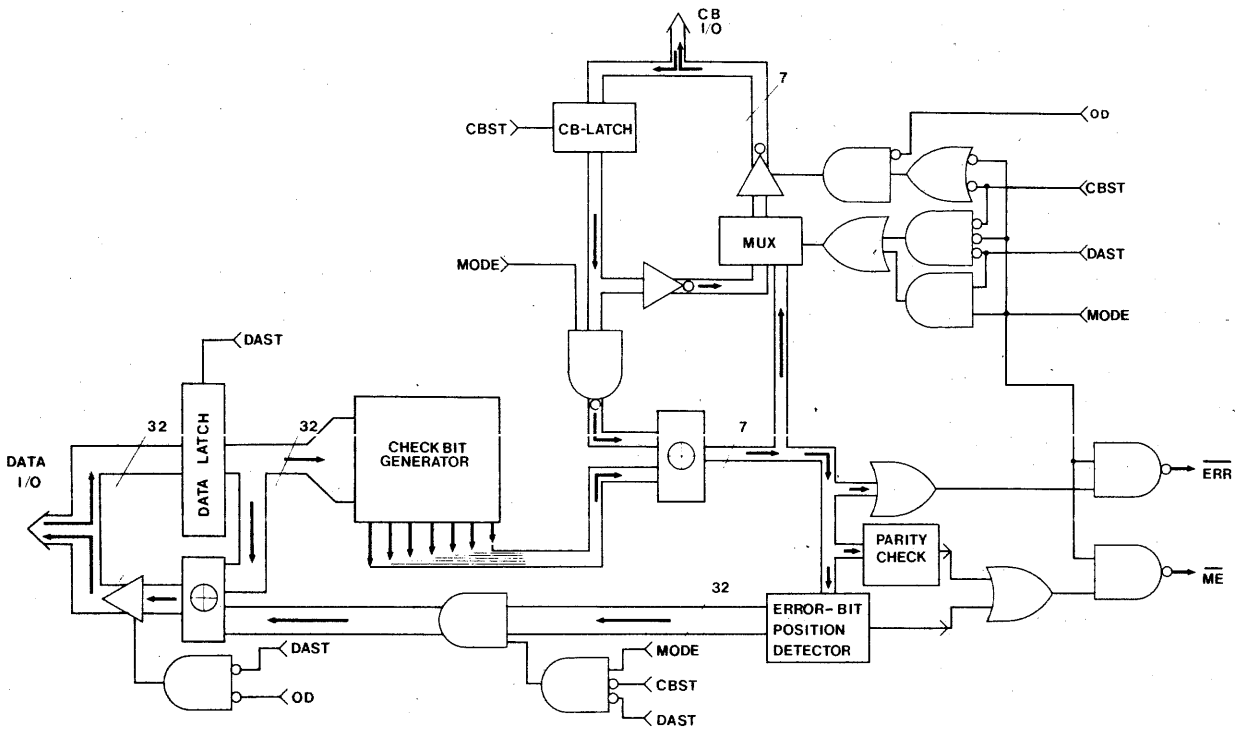

PIN NAMES

PIN NAME	DESCRIPTION	COMMENTS
D_{00}–D_{31}	Data I/O Lines	32 bidirectional data lines. D_{00} is the least significant bit.
CB_0–CB_6	Check Bit I/O Lines	Seven bidirectional check bit lines used to output the check bits on memory write operations and to put the fail pattern syndromes during correction. CB_0 is the least significant bit.
DAST	Data Strobe	Used to strobe data into the data latches. When DAST is HIGH the outputs of the data latches follow the input data lines (D_{00}–D_{31}). When DAST is LOW the input data lines are latched into the data latches. In addition, when DAST is HIGH the data output drivers on the 32 bidirectional data lines are inhibited. These data output drivers are enabled when DAST is LOW and OD is LOW (see Function Table and Block Diagram).
OD	Output Disable	When OD is HIGH the 39 data/CB line drivers are in the high impedance state regardless of the state of the DAST, CBST and MODE inputs. When OD is LOW, the 32 data I/O lines and 7 check bits I/O lines may be either outputs and/or inputs depending on the states of the DAST, CBST and MODE inputs.
$\overline{ME}$	Multiple Error	With the MODE input HIGH the $\overline{ME}$ output goes LOW whenever 2 or more bit errors have occurred in the memory word (data and check bits). When LOW, indicates a non-correctable error.

© IC MASTER 1984

PIN NAMES

PIN NAME	DESCRIPTION	COMMENTS
$\overline{ERR}$	Error	With the MODE input HIGH the $\overline{ERR}$ output goes LOW whenever a single or double bit error has occurred in the memory word (data and check bits).
MODE	Mode	The MODE input in conjunction with DAST and CBST inputs determines the internal function performed. A HIGH on the MODE input specifies the monitor/correct operation while a LOW specifies the generate/read operation.
CBST	Check Bit Strobe	Used to strobe data into the check bit latches. When CBST is HIGH the outputs of the check bit (CB) latches follow the input check bit lines. When CBST is LOW the input check bit lines are latched into the CB latches. The check bit output drivers are controlled by CBST, MODE and OD inputs as indicated in the Function Table (Block Diagram).

MEMORY WRITE OPERATION

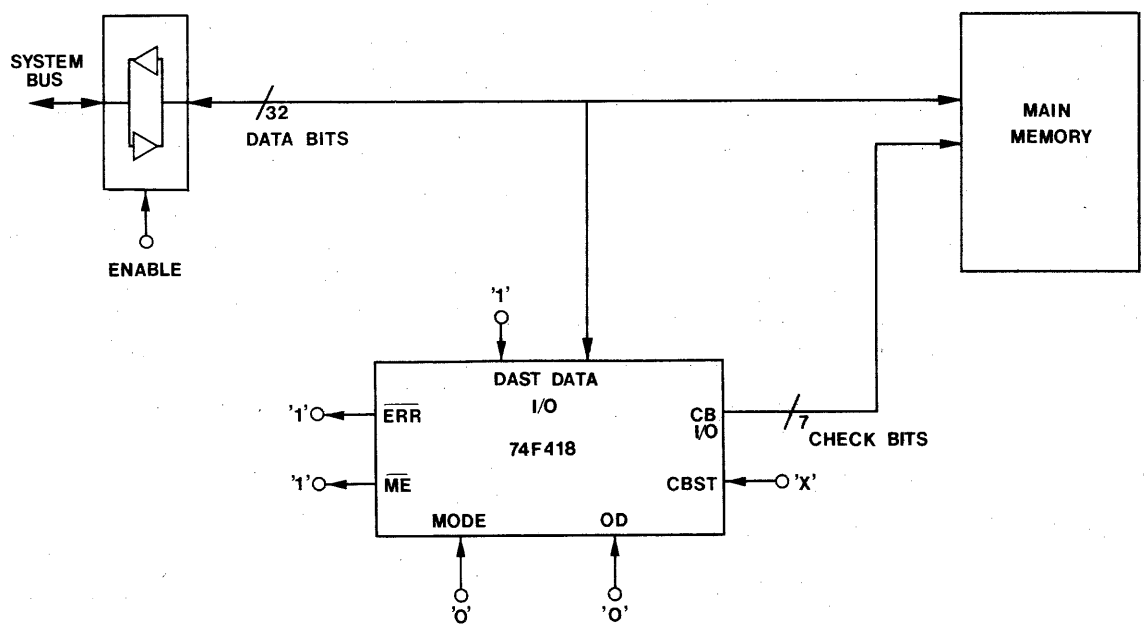

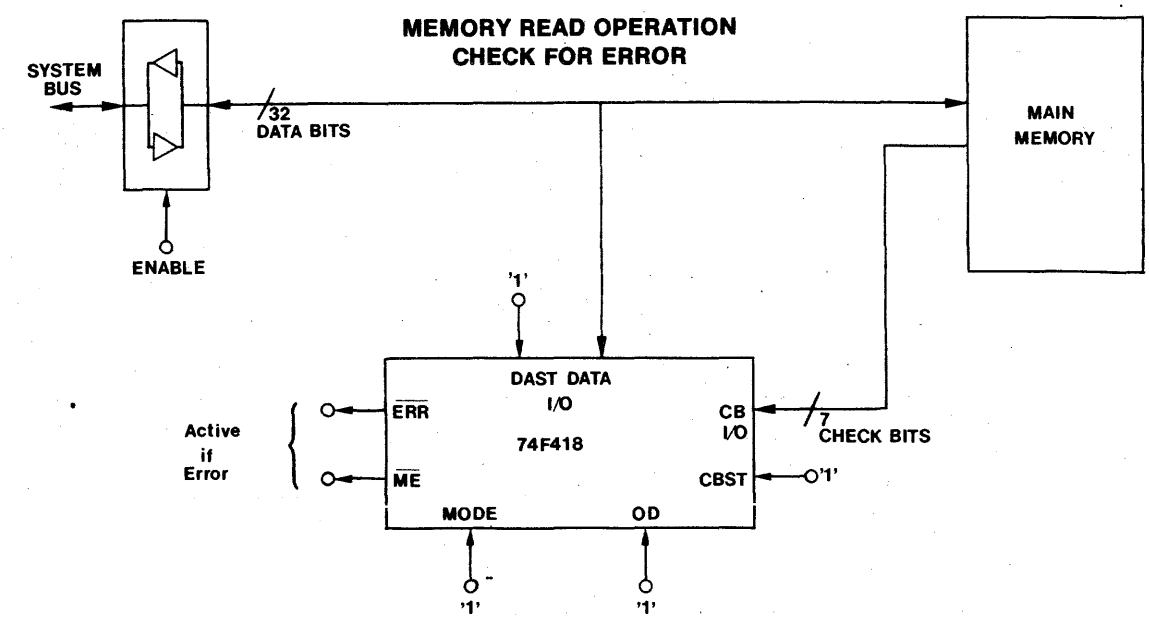

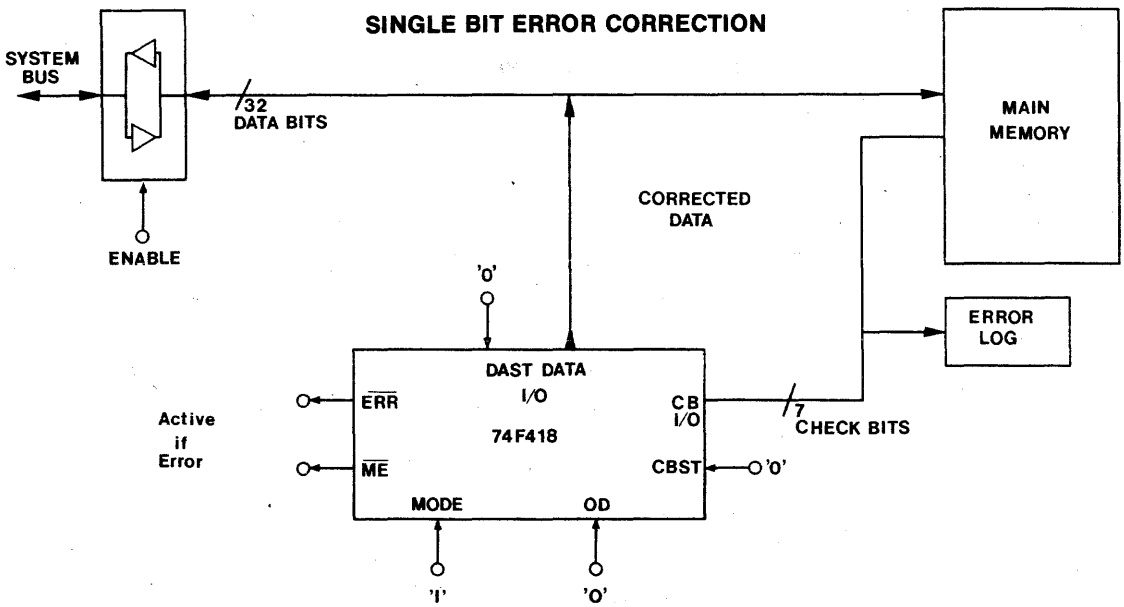

'F418 FUNCTION TABLE

CONTROL INPUTS			OUTPUTS			FUNCTION
DAST	MODE	CBST	DATA I/O*	CB I/O*	$\overline{ERR}$, $\overline{ME}$	
0	0	0	O/P Latched Data	O/P Latched CB's	1	Read Latches
0	0	1	O/P	O/P New CB's	1	Latched Generate CB's
0	1	0	O/P Corrected Data	O/P Syndromes	Active	Correct
0	1	1	O/P Uncorrected Data	I/P	Active	Monitor W/Latched Data
1	0	X	I/P	O/P New CB's	1	Unlatched Data, Generate CB's
1	1	0	I/P	O/P Latched CB's	Active	Monitor W/Latched CB's
1	1	1	I/P	I/P	Active	Monitor Inputs

*OD Must be LOW to enable the output drivers.

© IC MASTER 1984

PARITY ENTRIES/FAIL PATTERNS

Bit #	S6	S5	S4	S3	S2	S1	S0	Bit #	S6	S5	S4	S3	S2	S1	S0
D00	X	–	X	X	–	–	–	D20	–	X	X	–	X	–	–
D01	–	–	X	X	–	–	X	D21	X	X	X	–	X	–	X
D02	–	–	X	X	–	X	–	D22	X	X	X	–	X	X	–
D03	X	–	X	X	–	X	X	D23	–	X	X	–	X	X	X
D04	–	–	X	X	X	–	–	D24	–	X	X	X	–	–	–
D05	X	–	X	X	X	–	X	D25	X	X	X	X	–	–	X
D06	X	–	X	X	X	X	–	D26	X	X	X	X	–	X	–
D07	–	–	X	X	X	X	X	D27	–	X	X	X	–	X	X
D08	X	X	–	X	–	–	–	D28	X	X	X	X	X	–	–
D09	–	X	–	X	–	–	X	D29	–	X	X	X	X	–	X
D10	–	X	–	X	–	X	–	D30	–	X	X	X	X	X	–
D11	X	X	–	X	–	X	X	D31	X	X	X	X	X	X	X
D12	–	X	–	X	X	–	–								
D13	X	X	–	X	X	–	X	CB0	–	–	–	–	–	–	X
D14	X	X	–	X	X	X	–	CB1	–	–	–	–	–	X	–
D15	–	X	–	X	X	X	X	CB2	–	–	–	–	X	–	–
D16	X	X	X	–	–	–	–	CB3	–	–	–	X	–	–	–
D17	–	X	X	–	–	–	X	CB4	–	–	X	–	–	–	–
D18	–	X	X	–	–	X	–	CB5	–	X	–	–	–	–	–
D19	X	X	X	–	–	X	X	CB6	X	–	–	–	–	–	–

NOTES:

1.) During generate mode, MODE is LOW, CB2 through CB6 are calculated so that the indicated bits there are an even number of ones (i.e. even parity) while CB0, CB1 and CB6 are calculated for an odd number of ones. This modification of the Hamming code makes the device respond to a memory read of all ones or all zeros (all 39 bits) with a $\overline{ME}$ indication.

2.) During correction mode, with DAST LOW and CBST LOW, the fail pattern will be placed on the CB I/O lines. Each zero in the fail pattern indicates a discrepancy between that particular bit in the input (or latched) checkbit (based on D0 through D31). A fail pattern of all ones indicates no error. A single zero indicates that the corresponding check bit is in error and no correction of the data is required. This situation is still flagged with a LOW $\overline{ERR}$.

54F/74F500

6-BIT ANALOG-TO-DIGITAL CONVERTER

DESCRIPTION—The 'F500 is a 6-bit, fully parallel analog-to-digital converter capable of sampling at rates from 0 to 70 MHz. Conversion is accomplished by 64 comparators spaced one quanta apart on a voltage reference ladder. All comparators measure the analog input against their reference simultaneously. The most significant comparator that finds the analog input to be greater than its reference has its output encoded to a 6-bit, active-HIGH binary number, stored in latches. Two polarity control inputs are provided: P_M complements the most significant output bit and P_N complements the lesser five output bits. The circuit operates from +5.0 V and −6.0 V supplies and has separate digital and analog grounds. Both ends of the reference ladder are brought out, one to V_{RT} (nominally zero volts) and the other to V_{RB} (nominally −1.0 V).

- **NO SAMPLE AND HOLD REQUIRED**
- **SAMPLING RATE 70 MHz TYP**
- **APERTURE TIME 4.0 ns TYP**
- **V_{CC} SUPPLY CURRENT 23mA TYP**
- **V_{EE} SUPPLY CURRENT 93 mA TYP**
- **PIN COMPATIBLE WITH TDC 1014J**

CONNECTION DIAGRAM

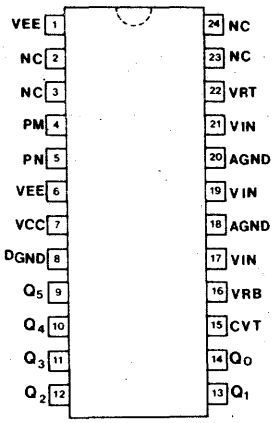

LOGIC SYMBOL

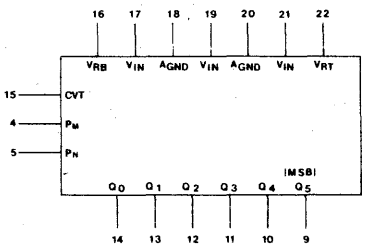

V_{CC} = Pin 7
V_{EE} = Pins 1, 6
D_{Gnd} = Pin 8

PIN NAMES

PIN NAMES	DESCRIPTION	COMMENTS
Q_0-Q_5	Data Outputs	
PM	Polarity Control Input -(Q_5)	
PN	Polarity Control Input -(Q_0-Q_4)	
CVT	Convert	
V_{IN}	Analog Input	
V_{RB}	Reference Input Bottom	
V_{RT}	Reference Input Top	

© IC MASTER 1984

54F/74F676

16-BIT SHIFT REGISTER SERIAL/PARALLEL IN, SERIAL OUT

DESCRIPTION — The 'F676 contains 16 flip-flops with provision for synchronous parallel or serial entry and serial output. When the Mode (M) input is HIGH, information present on the parallel data (P_0-P_{15}) inputs is entered on the falling edge of the Clock Pulse ($\overline{CP}$) input signal. When M is LOW, data is shifted out of the most significant bit position while information present on the Serial (SI) input shifts into the least significant bit position. A HIGH signal on the Chip Select ($\overline{CS}$) input prevents both parallel and serial operations.

- **16-BIT PARALLEL-TO-SERIAL CONVERSION**
- **16-BIT SERIAL-IN, SERIAL-OUT**
- **CHIP SELECT CONTROL**

CONNECTION DIAGRAM

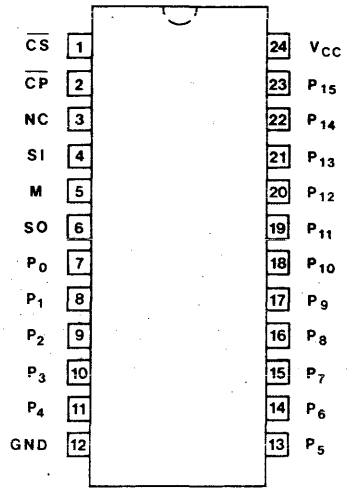

LOGIC SYMBOL

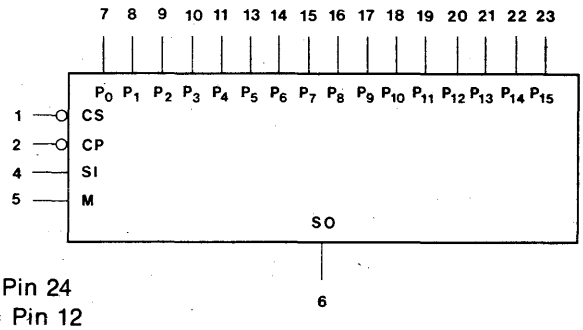

V_{CC} = Pin 24
GND = Pin 12

ORDERING CODE

PKGS	COMMERICAL GRADE V_{CC} = +5.0 V ±5%, T_A = 0°C to +70°C	MILITARY GRADE V_{CC} = +5.0 V ±10%, T_A = -55°C to +125°C	PKG TYPE
Plastic DIP (P)	74F676PC		9N
Ceramic DIP (D)	74F676DC	54F676DM	6N
Flatpak (F)		54F676FM	4M

INPUT LOADING/FAN-OUT

PIN NAMES	DESCRIPTION	54F/74F (U.L.) HIGH/LOW
P_0-P_{15}	Parallel Data Inputs	0.5/0.375
$\overline{CS}$	Chip Select Input (Active LOW)	0.5/0.375
$\overline{CP}$	Clock Pulse Input (Active LOW)	0.5/0.375
M	Mode Select Input	0.5/0.375
SI	Serial Data Input	0.5/0.375
SO	Serial Output	25/12.5

FUNCTIONAL DESCRIPTION — The 16-bit shift register operates in one of three modes, as indicated in the Shift Register Operation Table.

HOLD - a HIGH signal on the Chip Select ($\overline{CS}$) input prevents clocking, and data is stored in the 16 registers.

Shift/Serial Load - data present on the SI pin shifts into the register on the falling edge of $\overline{CP}$. Data enters the Q_0 position and shifts toward Q_{15} on successive clocks, finally appearing on the SO pin.

Parallel Load - data present on P_0 - P_{15} are entered into the register on the falling edge of $\overline{CP}$. The SO output represents the Q_{15} register output.

To prevent false clocking, $\overline{CP}$ must be LOW during a LOW to HIGH transition of $\overline{CS}$.

SHIFT REGISTER OPERATIONS TABLE

CONTROL INPUT			OPERATING MODE
$\overline{CS}$	M	$\overline{CP}$	
H	X	X	HOLD
L	L	⌉	SHIFT/SERIAL LOAD
L	H	⌉	PARALLEL LOAD

H = HIGH Voltage Level
L = LOW Voltage Level
X = Immaterial

FUNCTIONAL BLOCK DIAGRAM

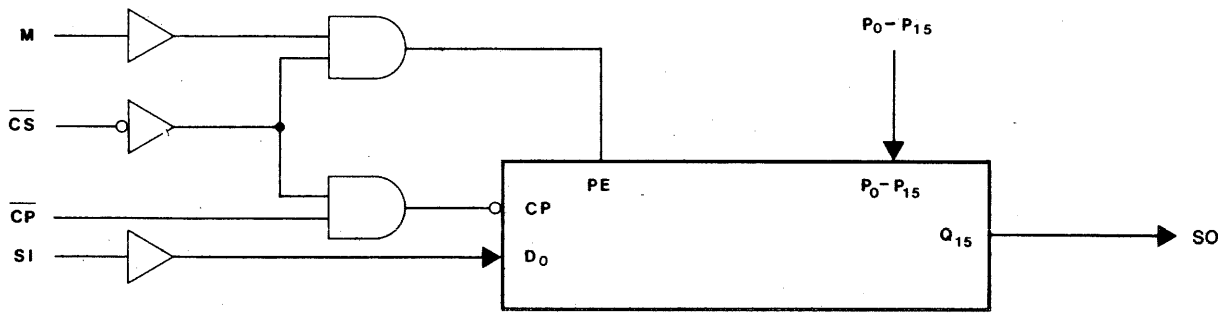

DC CHARACTERISTICS OVER OPERATING TEMPERATURE RANGE (unless otherwise specified)

SYMBOL	PARAMETER	54F/74F			UNITS	CONDITIONS
		Min	Typ	Max		
I_{CC}	Power Supply Current		48	72	mA	V_{CC} = Max

AC CHARACTERISTICS

SYMBOL	PARAMETER	54F/74F			54F		74F		UNITS
		T_A = +25°C, V_{CC} = +5.0 V C_L = 50 pF			T_A, V_{CC} = Mil C_L = 50 pF		T_A, V_{CC} = Com C_L = 50 pF		
		Min	Typ	Max	Min	Max	Min	Max	
f_{max}	Maximum Clock Frequency	100	110				90		MHz
t_{PLH}	Propagation Delay	4.5	9.0	11			4.5	12	ns
t_{PHL}	$\overline{CP}$ to SO	5.0	9.0	12.5			5.0	13.5	

© IC MASTER 1984

AC OPERATING REQUIREMENTS

SYMBOL	PARAMETER	54F/74F $T_A = +25°C$, $V_{CC} = +5.0$ V			54F T_A, V_{CC} = Mil		74F T_A, V_{CC} = Com		UNITS
		Min	Typ	Max	Min	Max	Min	Max	
t_s (H) t_s (L)	Setup Time, HIGH or LOW SI to $\overline{CP}$	4.0 4.0					4.0 4.0		ns
t_h (H) t_h (L)	Hold Time, HIGH or LOW SI to $\overline{CP}$	4.0 4.0					4.0 4.0		
t_s (H) t_s (L)	Setup Time, HIGH or LOW P_n to $\overline{CP}$	3.0 3.0					3.0 3.0		ns
t_h (H) t_h (L)	Hold Time, HIGH or LOW P_n to $\overline{CP}$	4.0 4.0					4.0 4.0		
t_s (H) t_s (L)	Setup Time, HIGH or LOW M to $\overline{CP}$	4.0 6.5					4.5 7.5		ns
t_h (H) t_h (L)	Hold Time, HIGH or LOW M to $\overline{CP}$	0 2.0					0 2.0		
t_s (L)	Setup Time LOW $\overline{CS}$ to $\overline{CP}$	10.0					10.0		ns
t_h (H)	Hold Time, HIGH $\overline{CS}$ to $\overline{CP}$	10.0					10.0		
t_w (H) t_w (L)	$\overline{CP}$ Pulse Width, HIGH or LOW	4.0 6.0					4.0 6.0		ns

FACT™ Description and Family Characteristics

The Fairchild Advanced CMOS Technology, FACT,™ is Fairchild's proprietary, isoplanar, fully ion-implanted, silicon-gate process. FACT™ employs state-of-the-art techniques in projection photolithography, planar plasma etching, low pressure chemical vapor deposited (LPCVD) thin films and sputter metallization. With a nominal effective channel length of 2.5 μm, 500 angstrom gate oxide and 4 μm design rules, the process is ideal for fabricating high speed, high density CMOS logic/memory circuits. *Figure 2-1* shows the progress of CMOS technology since the 6 μm metal gate 4000 Series technology. *Figure 2-1a* shows the cross-section of a single stage inverter, fabricated by the standard 6 μm metal gate technology, which is still commonly used by many manufacturers to produce the 4000B Series CMOS devices. In 1973, Fairchild introduced the F4000 Series CMOS logic, which was fabricated with a 6 μm, silicon gate, oxide-isolation technology. This technology combines local oxide isolation techniques with silicon gate technology to achieve approximately 35% savings in area, as shown in *Figure 2-1b*. Operating speeds were increased due to self-alignment of the silicon gate and reduced sidewall capacitance. This is evident in the high speed performance of the Fairchild 4000B CMOS Series. Over the years, Fairchild has continued to improve the CMOS process. FACT™ is the result of such development effort and is backed-up by nine years of manufacturing experience in silicon-gate CMOS logic devices. As shown in *Figure 2-1c*, it is apparent that devices fabricated with FACT™ are substantially smaller than those made with the other two processes. Much higher density and complexity in circuit designs may be achieved. Another major advantage of FACT™ is that smaller geometry enables the device to operate at a higher speed. Logic gates manufactured with FACT™ can operate in excess of 20 MHz - 30 MHz while driving a 50 pF load with a typical output short circuit current of 55 mA.

Fig. 2-1 Cross Section of a CMOS Inverter

a) 6 μm Metal Gate Technology

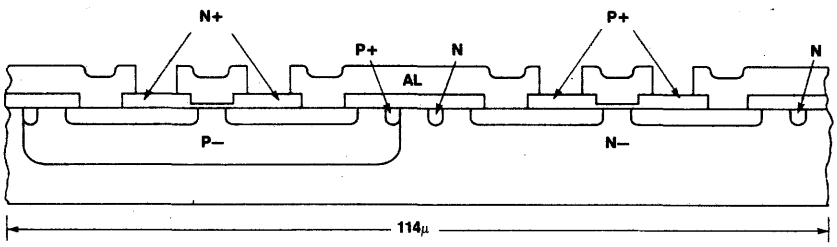

b) Fairchild Silicon Gate Technology

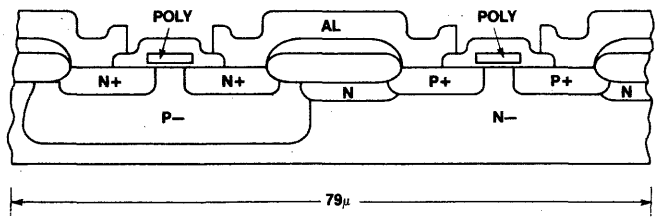

c) Fairchild Advanced CMOS Technology, FACT™

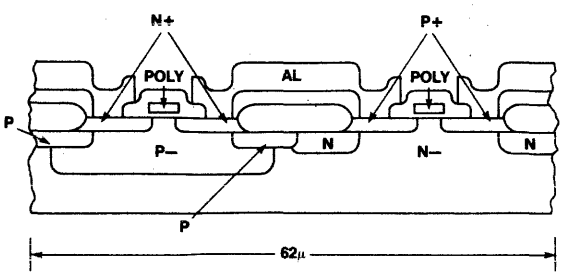

© IC MASTER 1984

Absolute Maximum Ratings
(beyond which useful life may be impaired)

DC Supply Voltage	−0.5 V to 7.0 V
Input or Output Voltage	−0.5 V to V_{CC} + 0.5 V
Input or Output Current (Any One Pin)	
Standard	±25 mA
Bus Driver	±35 mA
DC Current Output	
Standard	±50 mA
Bus Driver	±70 mA
Power Dissipation	500 mW
Storage Temperature	−65°C to 150°C

Recommended Operating Conditions

	Min	Max
DC Supply Voltage (Note 1)	2.0 V	6.0 V
Input or Output Voltage (Any One Pin)	0 V	V_{CC}
Input Rise/Fall Time		500 ns
Operating Temperature		
54HC	−55°C	+125°C
74HC	−40°C	+85°C

Note:
1. Some devices (analog switches, one shots, etc.) may be recommended to operate at V_{CC} = 3 V − 6 V.

DC Characteristics over Operating Temperature Range. V_{CC} = 5 V ± 10%

Symbol	Parameter			25°C Min	25°C Max	85°C Min	85°C Max	125°C Min	125°C Max	Units	Conditions
V_{IH}	Input HIGH Voltage			3.15		3.15		3.15		V	V_{CC} = 4.5 V
				3.85		3.85		3.85			V_{CC} = 5.5 V
V_{IL}	Input LOW Voltage				0.90		0.90		0.90	V	V_{CC} = 4.5 V
					1.10		1.10		1.10		V_{CC} = 5.5 V
V_{OH}	Output HIGH Voltage	All Devices		V_{CC}− 0.1		V_{CC}− 0.1		V_{CC}− 0.1		V	I_{OH} = −20 μA (1)
		Standard Output		3.80		3.70		3.50			I_{OH} = −4 mA (1)
				2.80		2.70		2.50			I_{OH} = −6 mA (1)
		Bus Driver Output		3.80		3.70		3.50			I_{OH} = −6 mA (1)
				2.80		2.70		2.50			I_{OH} = −8.7 mA (1)
V_{OL}	Output LOW Voltage	All Devices			0.10		0.10		0.10	V	I_{OL} = 20 μA (1)
		Standard Output	74HC		0.32		0.40				I_{OL} = 4 mA (1)
			54HC		0.32		0.40		0.40		I_{OL} = 3.4 mA (1)
		Bus Driver Output	74HC		0.32		0.40				I_{OL} = 6 mA (1)
			54HC		0.32		0.40		0.40		I_{OL} = 5.1 mA (1)
I_{IN}	Input Leakage Current	Non-Transceiver			±0.1		±1.0		±1.0	μA	V_{IN} = V_{CC} or GND
		Transceiver			±0.5		±5.0		±10.0		
I_{IN}	Analog Switch Input/Output Leakage Current (Per Channel)				±0.1		±1.0		±1.0	μA	V_{IN} = V_{CC} or GND $\lvert V_{CC} \rvert$ across channel
I_{OZ}	3-State Output Leakage Current				±0.5		±5.0		±10.0	μA	V_{OUT} = V_{CC} or GND
I_{CC}	Quiescent Device Current	SSI			2.0		20		40	μA	V_{IN} = V_{CC} or GND
		Flip-Flops and Buffers (2)			4.0		40		80		
		MSI and Bus Drivers			8.0		80		160		I_{OUT} = 0

Notes:
1. V_{IN} = V_{IH} or V_{IL}
2. Standard outputs

© IC MASTER 1984

AC Characteristics of Simple Gates and D-Type Flip-Flops
(T_A = 25°C, V_{CC} = 5 V, All Inputs are 5 V or ground)

Symbol	Parameter	C_L = 15 pF		C_L = 50 pF		Units	Figure No.
		Min	Max	Min	Max		
t_{PLH} t_{PHL}	Propagation Delay Standard Gates		13		15	ns	2-2 2-4 2-6
f_{MAX}	Maximum Clock Frequency (D Flip-Flop)		30		20	MHz	2-2 2-5
t_{PLH} t_{PHL}	Propagation Delay Clock to Q (D Flip-Flop)		23		25	ns	2-2 2-6
t_{PLH} t_{PHL}	Propagation Delay Clear to Q (D Flip-Flop)		21		23	ns	2-2 2-6
t_{SU}	Setup Time Data to Clock (D Flip-Flop)		10		10	ns	2-6
t_H	Hold Time Clock to Data (D Flip-Flop)	0		0		ns	2-6
t_W	Pulse Width Clock or Clear (D Flip-Flop)	17		17		ns	2-5

AC Characteristics—Bus Drivers
(T_A = 25°C, V_{CC} = 5 V, All Inputs are 5 V or ground)

Symbol	Parameter	C_L = 50 pF		C_L = 150 pF		Units	Figure No.
		Min	Max	Min	Max		
t_{PLH} t_{PHL}	Propagation Delay Data to Output		16		21	ns	2-2 2-4 2-6

Listing of Standard AC (Dynamic) Test Methods and Definitions

Figure 2-2 shows the standard AC (Dynamic) test configuration and conditions. Dynamic electrical symbols and parametric definitions are listed in *Figure 2-3. Figures 2-4* through *2-6* show standard AC characteristic test waveforms.

Fig. 2-2 Test Configuration and Conditions

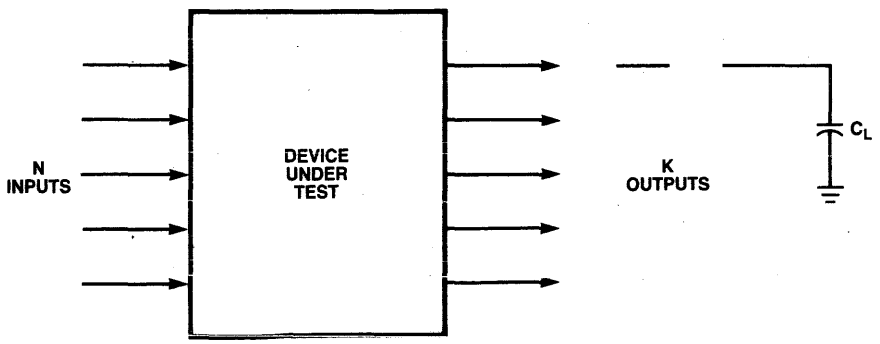

Standard Gate: C_L = 50 pF
Bus Driver: C_L = 50 pF
150 pF

V_{CC} = 5 V

$t_s = t_f$ = 6 ns

© IC MASTER 1984

Fig. 2-3 Dynamic Electrical Symbols and Definitions

Characteristic	Symbol	Limits Max	Limits Min	Notes
Propagation Delay:				
Outputs going LOW-to-HIGH	t_{PLH}	X		
Outputs going HIGH-to-LOW	t_{PHL}	X		
Output Transition Time:				
Outputs going LOW-to-HIGH	t_{TLH}	X		
Outputs going HIGH-to-LOW	t_{THL}	X		
Pulse Width—Set, Reset, Preset, Enable, Disable, Strobe, Clock	t_{WL} or t_{WH}		X	1
Maximum Clock Input Frequency	F_{CL}		X	1,2
Clock Input Rise and Fall Time	t_r, t_f	X		
Set-up Time	t_{SU}		X	1
Hold time	t_H		X	1
Removal Time—Set, Reset, Preset, Enable	t_{REM}		X	1
Three State Delay Times:				
HIGH level-to-high impedance	t_{PHZ}	X		
LOW level-to-high impedance	t_{PLZ}	X		
High impedance-to-HIGH level	t_{PZH}	X		
High impedance-to-LOW level	t_{PZL}	X		

Notes:
1. By placing a defining min or max in front of definition, the limits can change from min to max, or vice versa.
2. Clock input waveform should have a 50% duty cycle and be such as to cause the outputs to be switching from 10% V_{CC} to 90% V_{CC} in accordance with the device truth table.

Fig. 2-4 Transition Times and Propagation Delay Times, Combinational Logic

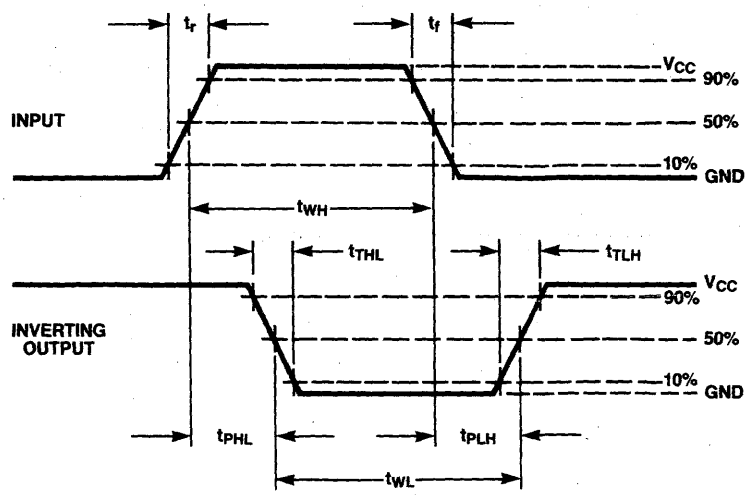

Fig. 2-5 Clock Pulse Rise and Fall Times and Pulse Width

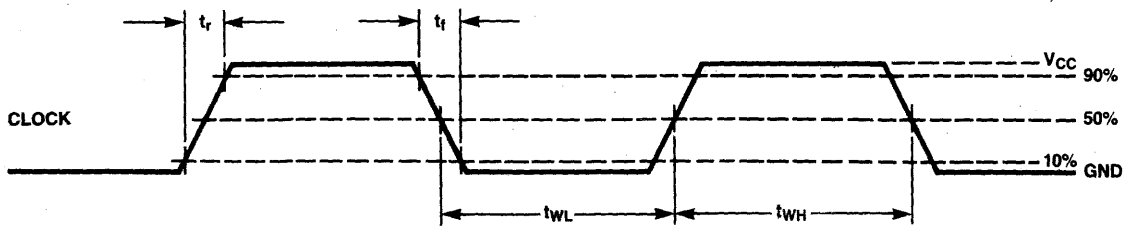

Fig. 2-6 Setup Times, Hold-Times, Removal Time, and Propagation Delay Times for Positive Edge-Triggered Sequential Logic Circuits

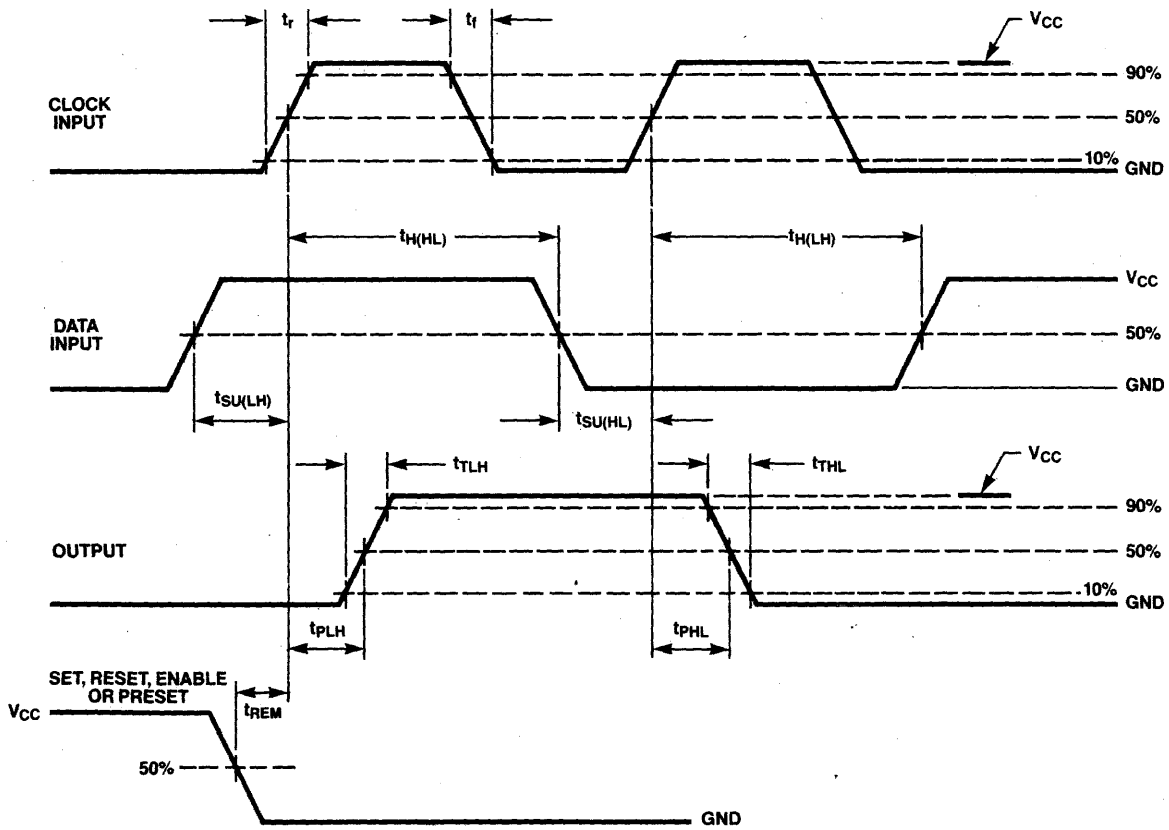

© IC MASTER 1984

Fig. 2-3 Dynamic Electrical Symbols and Definitions

Characteristic	Symbol	Limits Max	Limits Min	Notes
Propagation Delay:				
Outputs going LOW-to-HIGH	t_{PLH}	X		
Outputs going HIGH-to-LOW	t_{PHL}	X		
Output Transition Time:				
Outputs going LOW-to-HIGH	t_{TLH}	X		
Outputs going HIGH-to-LOW	t_{THL}	X		
Pulse Width—Set, Reset, Preset, Enable, Disable, Strobe, Clock	t_{WL} or t_{WH}		X	1
Maximum Clock Input Frequency	F_{CL}		X	1,2
Clock Input Rise and Fall Time	t_r, t_f	X		
Set-up Time	t_{SU}		X	1
Hold time	t_H		X	1
Removal Time—Set, Reset, Preset, Enable	t_{REM}		X	1
Three State Delay Times:				
HIGH level-to-high impedance	t_{PHZ}	X		
LOW level-to-high impedance	t_{PLZ}	X		
High impedance-to-HIGH level	t_{PZH}	X		
High impedance-to-LOW level	t_{PZL}	X		

Notes:
1. By placing a defining min or max in front of definition, the limits can change from min to max, or vice versa.
2. Clock input waveform should have a 50% duty cycle and be such as to cause the outputs to be switching from 10% V_{CC} to 90% V_{CC} in accordance with the device truth table.

Fig. 2-4 Transition Times and Propagation Delay Times, Combinational Logic

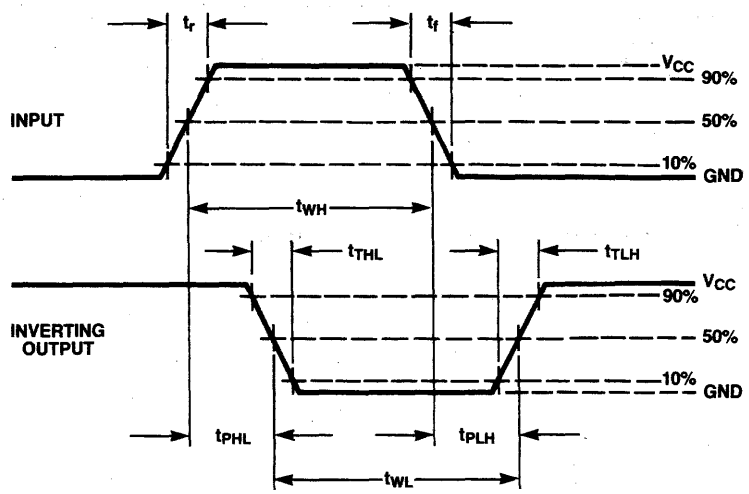

Fig. 2-5 Clock Pulse Rise and Fall Times and Pulse Width

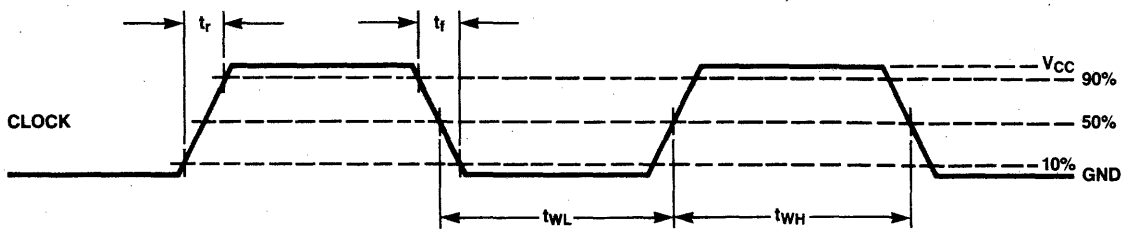

Fig. 2-6 Setup Times, Hold-Times, Removal Time, and Propagation Delay Times for Positive Edge-Triggered Sequential Logic Circuits

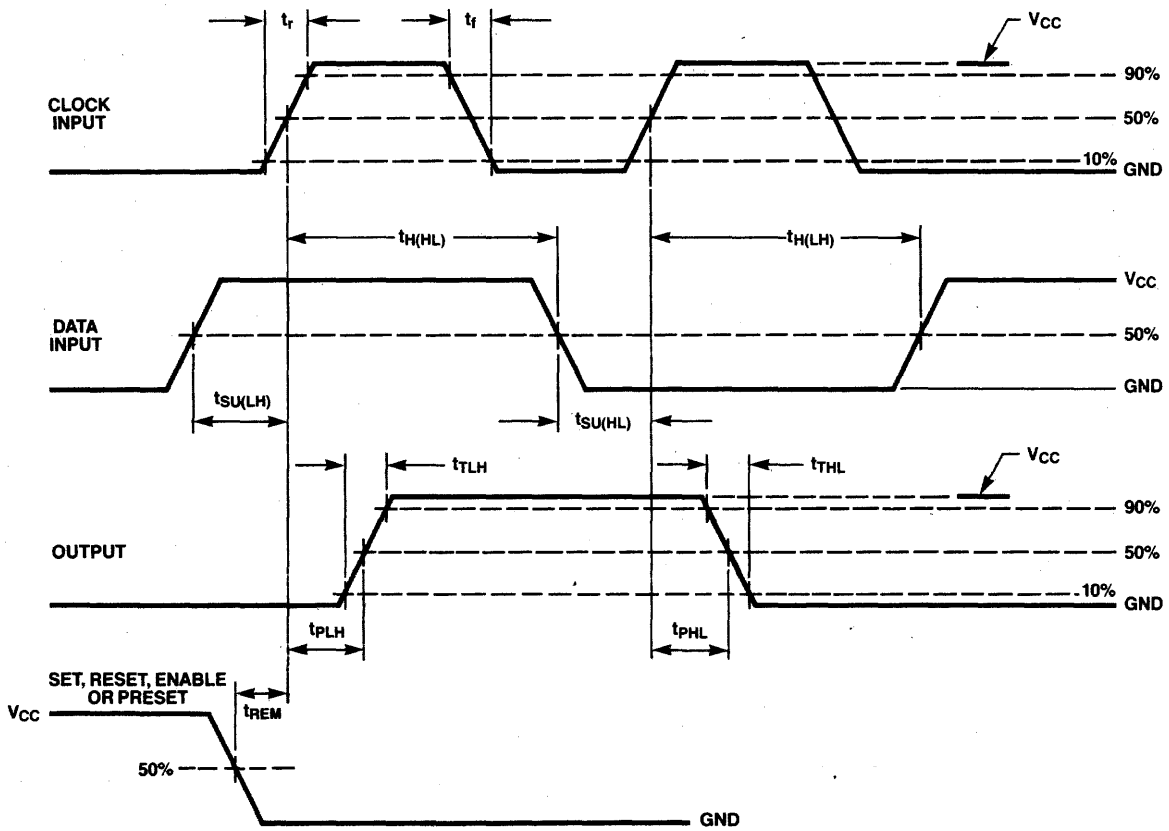

© IC MASTER 1984

Gates

Function	Device No.	Function	Device No.
NAND		*OR/NOR/Exclusive-OR*	
Quad 2-Input	54F/74F00	Quad 2-Input OR	54F/74F32
Triple 3-Input	54F/74F10	Quad 2-Input NOR	54F/74F02
Dual 4-Input	54F/74F20	Quad 2-Input Exclusive-OR	54F/74F86
AND		*Invert/AND-OR-Invert*	
Quad 2-Input	54F/74F08	Hex Inverter	54F/74F04
Triple 3-Input	54F/74F11	AND-OR-Invert	54F/74F64

Dual Edge-Triggered Flip-Flops

Function	Device No.	Inputs	Clock Edge	Direct Set	Direct Clear	Maximum Clock Frequency @ 25 °C MHz (Min)
Dual D	54F/74F74	D	↑	Yes	Yes	100
Dual J$\overline{K}$	54F/74F109	J,$\overline{K}$	↑	Yes	Yes	90
Dual JK	54F/74F112	J,K	↓	Yes	Yes	100
Dual JK	54F/74F113	J,K	↓	Yes	No	100
Dual JK	54F/74F114	J,K	↓	Yes	Yes	100

Multiple Flip-Flop/Registers

Function	Device No.	Data Inputs	Common Clear (Level)	CP Inputs (Level)	Maximum Clock Frequency @ 25 °C MHz (Min)
4-Bit D Flip-Flop	54F/74F175	4 x D	1(L)	1(↑)	100
4-Bit D Flip-Flop	54F/74F379	4 x D		1(↑)	100
6-Bit D Flip-Flop	54F/74F174	6 x D	1(L)	1(↑)	100*
6-Bit D Flip-Flop	54F/74F378	6 x D		1(↑)	100*
8-Bit Flip-Flop (3S)	54F/74F374	8 x D		1(↑)	100
8-Bit D Flip-Flop (3S)	54F/74F534	8 x D		1(↑)	100
Dual 8-Bit Register (3S)	54F/74F604	2(8 x D)		1(↑)	NA
Quad 2-Port Register	54F/74F398	2(4 x D)		1(↑)	100
Quad 2-Port Register	54F/74F399	2(4 x D)		1(↑)	100
Octal Registered Transceiver (3S)	54F/74F550	2(8 x D)		2(↑)	
Octal Registered Transceiver (3S)	54F/74F551	2(8 x D)		2(↑)	

*Preliminary
3S = 3-State
NA = Data Not Available

Selection Guide (Cont'd)

Latches

Function	Device No.	Data Inputs	Common Clear (Level)	Enable Inputs (Level)	Enable Pulse Width @ 25 °C ns (Min)	Enable to Output Delay @ 25 °C ns (Max)
Octal D (3S)	54F/74F373	8 x D		1 (H)	6.0	11.5
Octal D (3S)	54F/74F533	8 x D		1 (H)	6.0	11
Octal D (3S) w/Interrupt	54F/74F412	8 x D	1 (L)			
Octal D (3S) w/Interrupt	54F/74F432	8 x D	1 (L)			
Octal D Registered Transceiver (3S)	54F/74F543	2(8 x D)		2 (L)		12*
Octal D Registered Transceiver (3S)	54F/74F544	2(8 x D)		2 (L)		12*

Multiplexers

Function	Device No.	Enable Inputs (Level)	True Output	Complement Output
4-Input (3S)	54F/74F350	1 (L)	Yes	No
8-Input	54F/74F151	1 (L)	Yes	Yes
8-Input (3S)	54F/74F251	1 (L)	Yes	Yes
Dual 4-Input	54F/74F153	2 (L)	Yes	No
Dual 4-Input (3S)	54F/74F253	2 (L)	Yes	No
Dual 4-Input	54F/74F352	2 (L)	No	Yes
Dual 4-Input (3S)	54F/74F353	2 (L)	No	Yes
Quad 2-Input	54F/74F157	1 (L)	Yes	No
Quad 2-Input	54F/74F158	1 (L)	No	Yes
Quad 2-Input (3S)	54F/74F257	1 (L)	Yes	No
Quad 2-Input (3S)	54F/74F258	1 (L)	No	Yes
Quad 2-Input	54F/74F398		Yes	Yes
Quad 2-Input	54F/74F399		Yes	No

Decoders/Demultiplexers

Function	Device No.	Address Inputs	Active-LOW Enable	Active-HIGH Enable	Active-LOW Ouptput Enable	Active-LOW Outputs	Active-HIGH Outputs
Dual 1-of-4	54F/74F139	2 + 2	1 + 1			4 + 4	
Dual 1-of-4 (3S)	54F/74F539	2 + 2	1 + 1		1 + 1		4 + 4
1-of-8	54F/74F138	3	2	1		8	
1-of-8 (3S)	54F/74F538	3	2	2	2		8
1-of-8 w/Address Latches	54F/74F547	3	1	2		8	
1-of-8	54F/74F548	3	2	2		8	
1-of-10 (3S)	54F/74F537	4	1	1	1		10

*Preliminary
3S = 3-State

© IC MASTER 1984

Selection Guide (Cont'd)

Shift Registers/FIFOs

Function	Device No.	No. of Bits	Serial Entry	Maximum Clock Frequency @ 25 °C MHz (Min)
Shift Right, Serial-in/Parallel-out	54F/74F164	8	2	80
Shift Right, Serial/Parallel-in, Parallel/Serial-out (3S)	54F/74F322	8	2	70*
Shift Right, Serial-in, Serial/Parallel-out	54F/74F673	16	1	100*
Shift Right, Serial/Parallel-in, Serial-out	54F/74F674	16	1	100*
Shift Right, Serial-in, Serial/Parallel-out	54F/74F675	16	1	100*
Shift Right, Serial/Parallel-in, Serial-out	54F/74F676	16	1	100*
Bidirectional, Serial/Parallel-in, Parallel/Serial-out	54F/74F194	4	2	105
Bidirectional, Serial/Parallel-in, Parallel/Serial-out (3S)	54F/74F299	8	2	70*
Bidirectional, Serial/Parallel-in, Parallel/Serial-out (3S)	54F/74F323	8	2	70*
16 x 4 FIFO, Serial/Parallel-in, Serial/Parallel-out (3S)	54F/74F403	4	1	
64 x 4 FIFO, Parallel-in/Parallel-out	54F/74F413	4		
64 x 4 FIFO, Serial/Parallel-in, Serial/Parallel-out (3S)	54F/74F433	4	1	

Synchronous Presettable Counters

Funtion	Device No.	Modulus	No. of Bits	Parallel Entry	Maximum Clock Frequency @ 25 °C MHz (Min)
BCD Count-Up	54F/74F160A	10	4	S	100*
BCD Count-Up	54F/74F162A	10	4	S	100*
BCD Up-Down	54F/74F168	10	4	S	75*
BCD Up-Down	54F/74F190	10	4	A	80
BCD Up-Down	54F/74F192	10	4	A	80*
BCD Up-Down (3S)	54F/74F568	10	4	S	75*
Binary Count-Up	54F/74F161A	16	4	S	100*
Binary Count-Up	54F/74F163A	16	4	S	100*
Binary Up-Down	54F/74F169	16	4	S	75*
Binary Up-Down	54F/74F191	16	4	A	80
Binary Up-Down	54F/74F193	16	4	A	80
Binary Up-Down (3S)	54F/74F569	16	4	S	75*
Binary Up-Down	54F/74F269	256	8	S	100*
Binary Up-Down (3S)	54F/74F579	256	8	S	100*
Binary Up-Down (3S)	54F/74F779	256	8	S	100*

* Preliminary
3S = 3-State
S = Synchronous; A = Asynchronous

Selection Guide (Cont'd)

3-State Buffer/Line Driver/Transceivers

Function	Device No.	Enable Inputs (Level)	Current Sinking Side A/Side B mA
Octal Buffer/Line Driver	54F/74F240	2 (L)	64
Octal Buffer/Line Driver	54F/74F241	1 (L) + 1 (H)	64
Octal Buffer/Line Driver	54F/74F244	2 (L)	64
Quad Bus Transceiver	54F/74F242	1 (L) + 1 (H)	64/64
Quad Bus Transceiver	54F/74F243	1 (L) + 1 (H)	64/64
Octal Bus Transceiver	54F/74F245	1 (L)	20/64
Octal Bus Transceiver	54F/74F545	1(L)	20/64
Octal Registered Transceiver	54F/74F543	2 (L)	20/64
Octal Registered Transceiver	54F/74F544	2 (L)	20/64
Octal Registered Transceiver	54F/74F550	2 (L)	20/64
Octal Registered Transceiver	54F/74F551	2 (L)	20/64
GPIB Octal Transceiver	54F/74F588	1 (L)	20/64

© IC MASTER 1984

Selection Guide (Cont'd)

Arithmetic Operators

Function	Device No.	Description	No. of Bits
Adder	54F/74F283	Full Binary 4-Bit with Fast Carry	4
Adder	54F/74F583	Full BCD with Fast Carry	4
Adder/Subtractor	54F/74F385	Quad Serial with Carry-Save	4 x 1
Adder/Subtractor	54F/74F582	BCD Add/Substract/Compare with Ripple and Lookahead Carry	4
Arithmetic Logic Unit	29F01	4-Bit Slice ALU with 2-Port RAM	4
Arithmetic Logic Unit	54F/74F181	ALU with Ripple and Lookahead Carry	4
Arithmetic Logic Unit	54F/74F381	ALU with Lookahead Carry	4
Arithmetic Logic Unit	54F/74F382	ALU with Ripple Carry and Overflow	4
Carry Lookahead	54F/74F182	CLA for 4 ALUs	
Comparator	54F/74F521	8-Bit Equality Comparator	2 x 8
Comparator	54F/74F524	8-Bit Registered Full Comparator	2 x 8
Controller	29F10	Microprogram Controller with Counters and Stack	12
Encoder	54F/74F148	8-Bit Priority Encoder	8
Error Detect	54F/74F401	16-Bit CRC Generator/Checker	16
Error Detect	54F/74F402	Expandable 16-Bit CRC Generator/Checker	16
Error Detect/Correct	54F/74F630	16-Bit Parallel Data Error Detect/Correct/ Syndrome Generator (3S)	16
Error Detect/Correct	54F/74F418	32-Bit Parallel Data Error Detect/Correct (3S)	32
Error Detect/Correct	54F/74F430	Serial Burst Error Detect/Correct	32
Multiplier	54F/74F384	8-Bit Serial/Parallel Sequential	1 x 8
Multiplier	54F/74F784	8-Bit Serial/Parallel Sequential with Adder/Subtractor	1 x 8
Multiplier	54F/74F557	8 x 8 Bit Parallel with Latches (3S)	8 x 8
Multiplier	54F/74F558	8 x 8 Bit Parallel (3S)	8 x 8
Multiplier/Divider	54F/74F559	8 x 8 Bit Expandable	8 x 8
Parity	54F/74F280	9-Bit Parity Generator/Checker	9
Shifter	54F/74F350	Expandable 4-Bit Shifter	4

3S = 3-State

Selection Guide (Cont'd)

Memory

Organization	Device No.	Address Access Time ns (Max) Mil/Com	Chip Select Access Time ns (Max) Mil/Com
16 x 4 RAM (3S)	54F/74F189	22/18	14/11.5
16 x 4 RAM (3S)	54F/74F219	1818	11.5/14
16 x 4 RAM (3S)	29F705	30*	
16 x 9 RAM (3S)	54F/74F212	15*	8.0*
16 x 9 RAM w/Latch (3S)	54F/74F211	15*	8.0*
16 x 12 RAM (3S)	54F/74F213	15*	8.0*

Memory Peripherals

Description	Device No.
Memory Mapper (3S)	54F/74F612
Memory Mapper w/Latched Outputs (3S)	54F/74F610
16-Bit Error Detection/Correction (3S)	54F/74F630
32-Bit Error Detection/Correction	54F/74F418
Serial Burst Error Detection/Correction	54F/74F430

Specialized LSI

Description	Device No.
Cyclical Redundancy Check (CRC) Generator/Checker	54F/74F401
Expandable Cyclical Redundancy Check (CRC) Generator/Checker	54F/74F402
Serial Burst Error Detection/Correction	54F/74F430
6-Bit A/D Flash Converter	54F/74F500
8-Bit A/D Converter (Successive Approximation)	54F/74F505
16-State Programmable Counter/Divider	54F/74F525
4-Bit Microprocessor Slice	29F01
Microprogram Controller	29F10

3S = 3-State
*Preliminary

© IC MASTER 1984

IC MASTER

INTERNATIONAL DISTRIBUTORS

ARGENTINA, COLUMBIA, ECUADOR, VENEZUELA, MEXICO, PERU
Intectra
2629 Terminal Blvd.
Mt. View, CA 94043
Tel. (415) 967-8818

AUSTRALIA
A J Distributors Pty Ltd.
P.O. Box 71
Prospect, S. Australia 5082
Tel. 269-1244
Telex (790) 82635

AUSTRIA
Becos Electronic Ges. M.G.H.
Gablenzgasse 52
A-1160 Vienna, Austria
Tel. 0222/959145
Telex (847) 134606

BELGIUM
J. P. LeMaire S.A.
Limberg, Stirum 243
1810 Wemmel, Belgium
Tel. 02/4784847
Telex (846) 24610

BRAZIL
Filcres Importacao
Rua Aurora
CEP 01209
Caixa Postal 18767
Sao Paulo, Brazil
Tel. (011) 223 7388
Telex (391) 113298

CANADA
Future Electronics
237 Hymus Blvd.
Pointe Claire
Quebec H9R 5C7
Canada
Tel. 514-694-7710
TWX: 610-421-3251
Telex 05-823554

DENMARK
Advanced Electronik
55, Mariendalsvej
DK2000, Copenhagen F, Denmark
Tel. 01 194433
Telex (855) 22431

ENGLAND
Paterson/Steadman & Partner Ltd.
The Hub
Emson Close
Saffron Walden, Essex
CB10 1HL, England
Tel. 27067
Telex (851) 81653

J. B. Tratsart Ltd.
Dogmersfield Nr.
Baskingstroke
Hampshire RG27 8SU, England
Tel. 02514 3334
Telex (851) 916196

FINLAND
ITT Multikomponent
Tyopajakatu 5
PL107,00501
Helsinki 50, Finland
Tel. 739100
Telex (857) 121450

FRANCE
Conseilet Promotion
28 Rue de la Procession
92150 Suresnes, France
Tel. 5064275
Telex (842) 614596F

HOLLAND
Manudax-Nederland B.V.
54732G Heeswijk (N.B.)
Meerstraat 7, Holland
Tel. 04139 2901
Telex (844) 50175

HONG KONG
Conmos Products, Ltd.
Haynein Bldg., 11th Floor
1 Tai Yip Street
Keun Tong, Kowloon, Hong Kong
Tel. 3-684572
Telex (780) 85448

INDIA, MALAYSIA, SINGAPORE, THAILAND
Radio & Craft Publications
4794/23 Bharat Ram Road
Daryanganj, New Delhi 2, India
Tel. 277147

ISRAEL
STG International Ltd.
10 Humberman Street
P. O. Box 1276
61012 Tel Aviv, Israel
Tel. 248231
Telex (922) 342229

ITALY
Gruppo Editoriale Jackson S.R.L.
Via Rosellini 12
20124 Milan, Italy
Tel. 68 80951
Telex (843) 315366

JAPAN
Asahi Glass Company, Ltd. Electronic Components Group
1-2 Marunouchi 2-chome
Chiyoda-ku, Tokyo 100, Japan
Tel. (03) 218-5813
Telex (781) TK4616

Overseas Data Service Co. Ltd.
Shugetsu Building No. 12-7
Kita-Aoyama 3-chome
Minato-ku, Tokyo 107, Japan
Tel. (03) 400-7090
Telex (781) J26487

Tokyo International Communications Inc.
Miyajima Bldg.
28 Yoyogi 1-chome,
Shibuya-ku
Tokyo 151, Japan
Tel. 379-2561
Telex (781) 33106

NORWAY
Fagbokservice A.S.
Ekebergn, 130B
Box 94
Bekkelagshogda, Oslo 2, Norway
Tel. (02) 282237

SOUTH AFRICA
Suntronika
Dargene House,
10 Station Street
Braamfontein, Johannesburg
South Africa
Tel. 725-1210
Telex (960) 4-24143

SPAIN
Sagitron
Castello 25, 2, °
Madrid 1, Spain
Tel. 402 6085
Telex (831) 43819

SWEDEN
Fertronic AB
Snormakarvagen 35
Box 56,
16126 Bromma, Sweden
Tel. 08/252610
Telex (854) 11181

SWITZERLAND
W. Stolz AG
Taefernstrasse 15
CH-5404 Baden-Daettwil
Switzerland
Tel. 056 840151
Telex (845) 54070Z

TAIWAN
Helm Engineering & Trading Co.
49 No. 143 Section 4
Hsin Yi Rd.
Taipei, Taiwan, ROC
Tel. 709-1888
Telex (785) 28204

TURKEY
EMPA Elektronik (Mamulleri Pazarlama AS)
Tersane Cad. Kuthan 38/408
Tr-Kara Koy — Istanbul, Turkey
Tel. (11) 496249
Telex 24429

WEST GERMANY
Astronic GmbH
Winzererstrasse 47d
8000 Munich 40,
West Germany
Tel. (089) 309031
Telex (841) 5216187

Hearst
HEARST BUSINESS COMMUNICATIONS, INC./UTP DIVISION
645 Stewart Avenue, Garden City, NY 11530 (516) 222-2500 TWX: 510-222-1673

Counters, Timers and Display Drivers

Part Number	Circuit Description	Package	Crystal Frequency	Output
ICM7207 ICM7207A	Frequency counter timebase.	14-Pin DIP 14-Pin DIP	6.5536 MHz 5.2488 MHz	0.01, 0.1, or 1-second count window plus store, reset and MUX.
ICM7208	7-digit unit counter. With addition of 7207 the circuit becomes a complete timer-frequency counter.	28-Pin DIP	—	LED display drive
ICM7211 ICM7212	Four-digit display decoder drivers; ICM7211 is LCD; ICM7212 is LED; Non-multiplexed for low noise, BCD input, decoded display drive output.	40-Pin DIP (plastic)	—	Four-digit, seven-segment direct display drive; LED or LCD
ICM7216 ICM7226	Eight-digit universal counter measures frequency, period, frequency ratio, time interval, units; on-board time base.	28-Pin DIP 40-Pin DIP (Cerdip or plastic)	1 or 10 MHz	Eight-digit-common anode or common cathode direct LED drive; BCD output
ICM7217 ICM7227	Four-digit CMOS up/down counter; presettable start/count and compare register; for hard-wired or microprocessor control applications; cascadable.	28-Pin Cerdip or plastic	—	Four-digit, seven-segment common anode or common cathode direct LED display drive; equal, zero, carry/borrow
ICM7218A/D ICM7218E	LED display driver system with 8x8 memory; numeric or dot (1 of 64) decoding; microprocessor compatible.	28-Pin DIP 40-Pin DIP (Cerdip or plastic)	—	Eight-digit, seven-segment plus decimal point; common cathode or common anode
ICM7224 ICM7225	4½-digit high speed counter/decoder/driver; 25 MHz typ. ICM7224 is LCD, ICM7225 is LED, direct display drive, cascadable.	40-Pin DIP (plastic)	—	4½-digit seven-segment direct display driver; LED or LCD
ICM7231	8-digit CMOS multiplexed LCD driver. Parallel input.	40-Pin DIP (plastic)	—	Eight-digit, seven-segment plus two flags per digit
ICM7232	10½-digit CMOS multiplexed LCD driver. Serial input.	40-Pin DIP (plastic)	—	10½-digit, seven-segment plus two flags per digit
ICM7233	4-character CMOS multiplexed LCD driver. Parallel alphanumeric (6-bit ASCII) input.	40-Pin DIP (plastic)	—	Four-character, 16-segment plus colon
ICM7234	5-character CMOS multiplexed LCD driver. Serial alphanumeric (6-bit ASCII) input.	40-Pin DIP (plastic)	—	Five-character, 16-segment plus colon
ICM7235/A	4-digit CMOS decoder/driver for direct drive vacuum fluorescent displays. BCD input.	40-Pin DIP (plastic)	—	Four-digit, seven-segment, vacuum fluorescent display drive; either HEX or CODE B
ICM7235M/AM	Same as above but microprocessor compatible.			
ICM7236	4½-digit high speed CMOS counter/decoder/driver for vacuum fluorescent displays; 25 MHz typ. counting speed.	40-Pin DIP (plastic)	—	4½-digit, seven-segment, vacuum fluorescent display drive
ICM7236A	Same as above but counting to 15959.	40-Pin DIP (plastic)	—	4½-digit, seven-segment, vacuum fluorescent display drive
ICM7240 ICM7250 ICM7260	Programmable CMOS counter/timers using external RC time base. Programmable from μs to years.	16-Pin DIP	External	Timed output
ICM7242	Fixed CMOS counter/timer. Uses external RC time base; sequence timing from μs to minutes.	8-Pin DIP	External	Timed output
ICM7243	8-character multiplexed LED display driver with alphanumeric (6-bit ASCII) input.	40-Pin Cerdip	—	Eight-character, 14/16-segment common cathode alphanumeric LED display drive
ICM7281	LCD Dot Matrix Column Driver	40-Pin DIP	—	Up to 256 x 256 dots
ICM7555 ICM7556	Single or dual CMOS version of industry-standard 555 timer; 80 μA typ. supply current; 500 kHz guaranteed; 2-18V power supply.	8-Pin DIP 14-Pin DIP	—	

© IC MASTER 1984

ICM7211 (LCD)
ICM7212 (LED)
Four Digit CMOS Display Decoder/Drivers

ICM7211 (LCD) FEATURES

- **Four digit non-multiplexed 7 segment LCD display outputs with backplane driver**
- **Complete onboard RC oscillator to generate backplane frequency**
- **Backplane input/output allows simple synchronization of slave-device segment outputs to a master backplane signal**
- **ICM7211 devices provide separate Digit Select inputs to accept multiplexed BCD input (Pinout and functionally compatible with Siliconix DF411)**
- **ICM7211M devices provide data and digit select code input latches controlled by $\overline{\text{Chip Select}}$ inputs to provide a direct high speed processor interface**
- **ICM7211 decodes binary hexadecimal; ICM7211A decodes binary to Code B (0-9, dash, E, H, L, P, blank)**

ICM7212 (LED) FEATURES

- **28 current-limited segment outputs provide 4-digit non-multiplexed direct LED drive at > 5mA per segment.**
- **Brightness input allows direct control of LED segment current with a single potentiometer. Can function digitally as a display enable.**
- **ICM7212M and ICM7212A devices provide same input configuration and output decoding options as the ICM7211.**

DESCRIPTION

The ICM7211 (LCD) and ICM7212 (LED) devices constitute a family of non-multiplexed four-digit seven-segment CMOS display decoder-drivers.

The ICM7211 devices are configured to drive conventional LCD displays by providing a complete RC oscillator, divider chain, backplane driver, and 28 segment outputs. These outputs provide the zero d.c. component signals necessary for long display life.

The ICM7212 devices are configured to drive common-anode LED displays, providing 28 current-controlled low leakage open-drain n-channel outputs. These devices provide a BRighTness input, which may be used at normal logic levels as a display enable, or with a potentiometer as a continuous display brightness control.

Both the LCD and LED devices are available with two input configurations. The basic devices provide four data-Bit inputs and four Digit Select inputs. This configuration is suitable for interfacing with multiplexed BCD or binary output devices, such as the ICM7217, ICM7226 and ICL71C03. The microprocessor interface (suffix M) devices provide data input latches and Digit Select code latches under control of high-speed Chip Select inputs. These devices simplify the task of implementing a cost-effective alphanumeric seven-segment display for microprocessor systems, without requiring extensive ROM or CPU time for decoding and display updating.

The standard devices will provide two different decoder configurations. The basic device will decode the four bit binary input into a seven-segment alphanumeric hexadecimal output. The "A" versions will provide the "Code B" output code, i.e., 0-9, dash, E, H, L, P, blank. Either device will correctly decode true BCD to seven-segment decimal outputs.

Devices in the ICM7211/7212 family are packaged in a standard 40 pin plastic dual-in-line package and all inputs are fully protected against static discharge.

PIN CONFIGURATIONS (OUTLINE DRAWING PL)

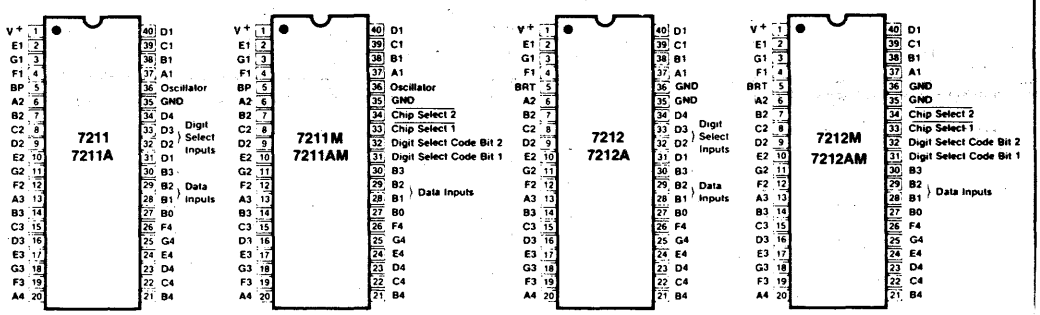

© IC MASTER 1984

ICM7213
One Second/One Minute Precision Clock and Reference Generator

FEATURES
- **Guaranteed 2 volts operation**
- **Very low current consumption: Typ. 100μA @ 3V**
- **All outputs TTL compatible**
- **On chip oscillator feedback resistor**
- **Oscillator requires only 3 external components: fixed capacitor, trim capacitor, and a quartz crystal**
- **Output inhibit function**
- **4 simultaneous outputs: one pulse/sec, one pulse/min, 16Hz and composite 1024 + 16 + 2Hz outputs**
- **Test speed-up provides other frequency outputs**
- **Input static protection — no special handling required**

GENERAL DESCRIPTION
The ICM7213 is a fully integrated micropower oscillator and frequency divider with four buffered outputs suitable for interfacing with most logic families. The power supply may be either a two battery stack (Ni-cad, alkaline, etc.) or a regular power supply greater than 2 volts. Depending upon the state of the WIDTH, INHIBIT, and TEST inputs, using a 4.194304 MHz crystal will produce a variety of output frequencies including 2048 Hz, 1024 Hz, 34.133 Hz, 16 Hz, 1 Hz, and 1/60 Hz (plus composites).

The ICM7213 utilizes a very high speed low power metal gate C-MOS technology which uses 6.4 volt zeners between the drains and sources of each transistor and also across the supply terminals. Consequently, the ICM7213 is limited to a 6 volt maximum supply voltage, although a simple dropping network can be used to extend the supply voltage range well above 6 volts (see Figure 2).

BLOCK DIAGRAM

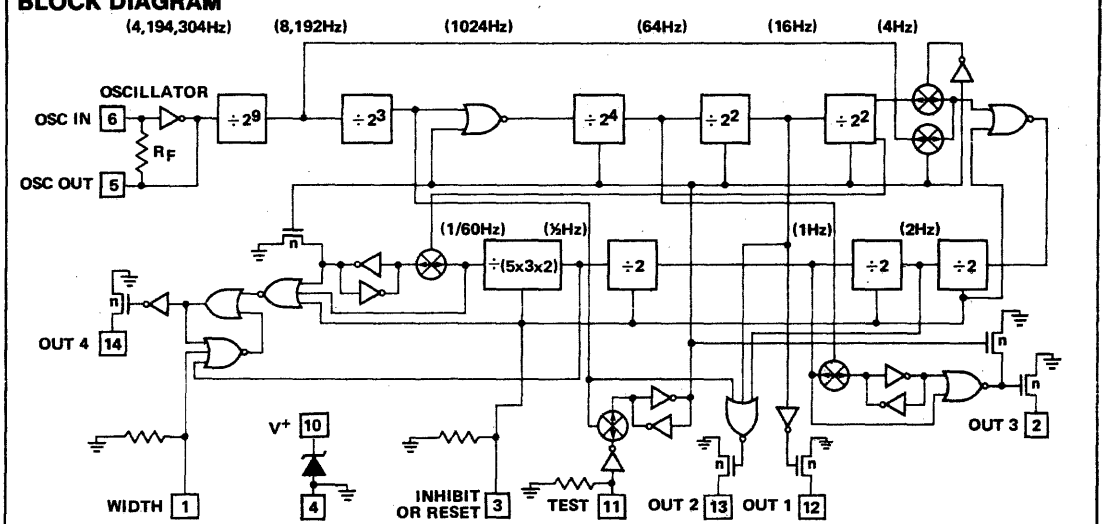

ORDERING INFORMATION

ICM7213 I PD

- PD — Package: PD = 14 Pin Plastic
- I — Temperature Range: -20°C to +85°C
- ICM7213 — Type

Order Devices by Following Part Number
ICM7213IPD

Order Dice by Following Part Number
ICM7213D

PIN CONFIGURATION (OUTLINE DRAWING PD)

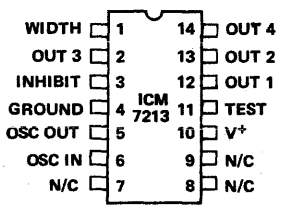

© IC MASTER 1984

ICM7216A/B/C/D 10 MHz Universal/ Frequency Counters

FEATURES

ALL VERSIONS:

- **Functions as a frequency counter. Measures frequencies from DC to 10 MHz**
- **Four internal gate times: 0.01 sec, 0.1 sec, 1 sec, 10 sec in frequency counter mode**
- **Output directly drives digits and segments of large multiplexed LED displays. Common anode and common cathode versions**
- **Single nominal 5V supply required**
- **Stable high frequency oscillator, uses either 1 MHz or 10 MHz crystal**
- **Internally generated decimal points, interdigit blanking, leading zero blanking and overflow indication**
- **Display Off mode turns off display and puts chip into low power mode**
- **Hold and Reset inputs for additional flexibility**

ICM7216A AND B

- **Functions also as a period counter, unit counter, frequency ratio counter or time interval counter**
- **1 cycle, 10 cycles, 100 cycles, 1000 cycles in period, frequency ratio and time interval modes**
- **Measures period from 0.5μs to 10s**

ICM7216C AND D

- **Decimal point and leading zero blanking may be externally selected**

GENERAL DESCRIPTION

The ICM7216A and B are fully integrated Universal Counters with LED display drivers. They combine a high frequency oscillator, a decade timebase counter, an 8-decade data counter and latches, a 7-segment decoder, digit multiplexers and 8 segment and 8 digit drivers which directly drive large multiplexed LED displays. The counter inputs have a maximum frequency of 10 MHz in frequency and unit counter modes and 2 MHz in the other modes. Both inputs are digital inputs. In many applications, amplification and level shifting will be required to obtain proper digital signals for these inputs.

The ICM7216A and B can function as a frequency counter, period counter, frequency ratio (f_A/f_B) counter, time interval counter or as a totalizing counter. The counter uses either a 10 MHz or 1 MHz quartz crystal timebase. For period and time interval, the 10MHz timebase gives a 0.1 μsec resolution. In period average and time interval average, the resolution can be in the nanosecond range. In the frequency mode, the user can select accumulation times of 0.01 sec, 0.1 sec, 1 sec and 10 sec. With a 10 sec accumulation time, the frequency can be displayed to a resolution of 0.1 Hz in the least significant digit. There is 0.2 seconds between measurements in all ranges.

The ICM7216C and D function as frequency counters only, as described above.

All versions of the ICM7216 incorporate leading zero blanking. Frequency is displayed in kHz. In the ICM7216A and B, time is displayed in μsec. The display is multiplexed at 500Hz with a 12.2% duty cycle for each digit. The ICM7216A and C are designed for common anode display with typical peak segment currents of 25mA. The ICM7216B and D are designed for common cathode displays with typical peak segment currents of 12mA. In the display off mode, both digit and segment drivers are turned off, enabling the display to be used for other functions.

ORDERING INFORMATION

Universal Counter; Common Anode LED	**ICM 7216 A**	**IJI**
Universal Counter; Common Cathode LED	**ICM 7216 B**	**IPI**
Frequency Counter; Common Anode LED	**ICM 7216 C**	**IJI**
Frequency Counter; Common Cathode LED	**ICM 7216 D**	**IPI**

Type

Package: JI — 28 pin CERDIP; PI — 28 pin PLASTIC DIP

Temperature Range -20°C to +85°C

Evaluation Kit:
Use ICM7226 EV/Kit

DIGITAL

Intersil

ICM7217 Series
ICM7227 Series
4-Digit CMOS Up/Down Counter/ Display Driver

FEATURES

- **Four decade, presettable up-down counter with parallel zero detect**
- **Settable register with contents continuously compared to counter**
- **Directly drives multiplexed 7 segment common anode or common cathode LED displays**
- **On-board multiplex scan oscillator**
- **Schmitt trigger on count input**
- **TTL compatible BCD I/O port, carry/borrow, equal, and zero outputs**
- **Display blank control for lower power operation; quiescent power dissipation < 5mW**
- **All terminals fully protected against static discharge**
- **Single 5V supply operation**

DESCRIPTION

The ICM7217 and ICM7227 are four digit, presettable up/down counters, each with an onboard presettable register continuously compared to the counter. The ICM7217 versions are intended for use in hardwired applications where thumbwheel switches are used for loading data, and simple SPDT switches are used for chip control. The ICM7227 versions are for use in processor-based systems, where presetting and control functions are performed under processor control.

These circuits provide multiplexed 7 segment LED display outputs, with common anode or common cathode configurations available. Digit and segment drivers are provided to directly drive displays of up to .8" character height (common anode) at a 25% duty cycle. The frequency of the onboard multiplex oscillator may be controlled with a single capacitor, or the oscillator may be allowed to free run. Leading zeroes can be blanked. The data appearing at the 7 segment and BCD outputs is latched; the content of the counter is transferred into the latches under external control by means of the Store pin.

The ICM7217/7227 (common anode) and ICM7217A/7227A (common cathode) versions are decade counters, providing a maximum count of 9999, while the ICM7217B, 7227B (common anode) and ICM7217C/7227C (common cathode) are intended for timing purposes, providing a maximum count of 5959.

These circuits provide 3 main outputs; a CARRY/BORROW output, which allows for direct cascading of counters, a $\overline{\text{ZERO}}$ output, which indicates when the count is zero, and an $\overline{\text{EQUAL}}$ output, which indicates when the count is equal to the value contained in the register. Data is multiplexed to and from the device by means of a three-state BCD I/O port. The CARRY/BORROW, $\overline{\text{EQUAL}}$, $\overline{\text{ZERO}}$ outputs, and the BCD port will each drive one standard TTL load.

To permit operation in noisy environments and to prevent multiple triggering with slowly changing inputs, the count input is provided with a Schmitt trigger.

Input frequency is guaranteed to 2 MHz, although the device will typically run with f_{in} as high as 5 MHz. Counting and comparing ($\overline{\text{EQUAL}}$ output) will typically run 750 kHz maximum.

PIN CONFIGURATIONS (outline dwgs JI, PI)

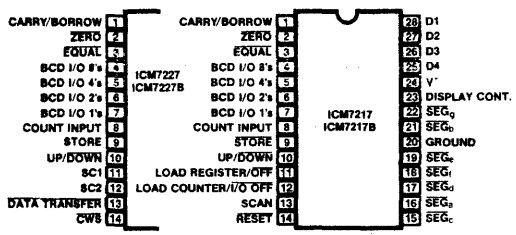

COMMON ANODE

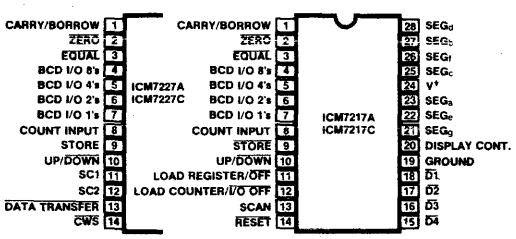

COMMON CATHODE

ORDERING INFORMATION

Display Option	Count Option Max Count	28-LEAD Package	Order Part Number
Common Anode	Decade/9999	CERDIP	ICM7217IJI
Common Cathode	Decade/9999	PLASTIC	ICM7217AIPI
Common Anode	Timer/5959	CERDIP	ICM7217BIJI
Common Cathode	Timer/5959	PLASTIC	ICM7217CIPI
Common Anode	Decade/9999	CERDIP	ICM7227IJI
Common Cathode	Decade/9999	PLASTIC	ICM7227AIPI
Common Anode	Timer/5959	CERDIP	ICM7227BIJI
Common Cathode	Timer/5959	PLASTIC	ICM7227CIPI

© IC MASTER 1984

ABSOLUTE MAXIMUM RATINGS

Power Dissipation (common anode/Cerdip) ..... 1W Note 1
Power Dissipation (common cathode/Plastic) ... 0.5W Note 1
Supply Voltage $V^+ - V^-$ 6V
Input Voltage
(any terminal) ..... V^+ +0.3V, Ground -0.3V Note 2
Operating temperature range ..... -20°C to +85°C
Storage temperature range ..... -55°C to +125°C

NOTE: Stresses above those listed under "Absolute Maximum Ratings" may cause permanent device failure. These are stress ratings only and functional operation of the devices at these or any other conditions above those indicated in the operation sections of this specification is not implied. Exposure to absolute maximum rating conditions for extended periods may cause device failures.

OPERATING CHARACTERISTICS

V^+ = 5V ±10%, T_A = 25°C, Test Circuit, Display Diode Drop 1.7V, unless otherwise specified

PARAMETER	SYMBOL	CONDITIONS	MIN	TYP	MAX	UNITS
Supply current (Lowest power mode)	I^+ (7217)	Display Off, LC, DC, UP/DN, ST, RS, BCD I/O Floating or at V^+ (Note 3)		350	500	μA
Supply current (Lowest power mode)	I^+ (7227)	Display off (Note 3)		300	500	μA
Supply current OPERATING	I^+_{OP}	Common Anode, Display On, all "8's"	175	200		mA
		Common Cathode, Display On, all "8's"	85	100		mA
Supply Voltage	V^+		4.5	5	5.5	V
Digit Driver output current	I_{DIG}	Common anode, $V_{OUT} = V^+ - 2.0V$	140	200		mA peak
SEGment driver output current	I_{SEG}	Common anode, V_{OUT} = +1.3V	−25	−40		mA peak
Digit Driver output current	I_{DIG}	Common cathode, V_{OUT} = +1.3V	−75	−100		mA peak
SEGment driver output current	I_{SEG}	Common cathode $V_{OUT} = V^+ - 2V$	10	12.5		mA peak
$\overline{ST}$, $\overline{RS}$, UP/$\overline{DN}$ input pullup current	I_P	$V_{OUT} = V^+ - 2V$ (See Note 3)	5	25		μA
3 level input impedance	Z_{IN}			100		kΩ
BCD I/O input high voltage	V_{BIH}	ICM7217 common anode (Note 4) (V^+ = 5.0V)	1.3			V
		ICM7217 common cathode (Note 4)	$V^+ - 0.6$			V
		ICM7227 with 50pF effective load	3			V
BCD I/O input low voltage	V_{BIL}	ICM7217 common anode (Note 4) (V^+ = 5.0V)			0.8	V
		ICM7217 common cathode (Note 4)			$V^+ - 1.8$	V
		ICM7227 with 50pF effective load			1.5	V
BCD I/O input pullup current	I_{BPU}	ICM7217 common cathode $V_{IN} = V^+ - 2V$ (Note 3)	5	25		μA
BCD I/O input pulldown current	I_{BPD}	ICM7217 common anode V_{IN} = +1.3V (Note 3)	5	25		μA
BCD I/O, CARRY/BORROW, $\overline{ZERO}$, $\overline{EQUAL}$ Outputs output high current	I_{BOH}	$V_{OH} = V^+ - 1.5V$	100			μA
BCD I/O, CARRY/BORROW, $\overline{ZERO}$, $\overline{EQUAL}$ Outputs output low current	I_{BOL}	V_{OL} = +0.4V	−2			mA
Count input frequency (Guaranteed)	f_{in}	V^+ = 5V ± 10%, −20°C < T_A < +70°C	0	5	2	MHz
Count input threshold	V_{TH}	V^+ = 5V		2		V
Count input hysteresis	V_{HYS}	V^+ = 5V		0.5		V
Display scan oscillator frequency	f_{ds}	Free-running (SCAN terminal open circuit)		2.5		kHz
Operating Temperature Range	T_A	Industrial temperature range	−20		+85	°C

NOTE 1 These limits refer to the package and will not be obtained during normal operation.

NOTE 2 Due to the SCR structure inherent in the CMOS process used to fabricate these devices, connecting any terminal to a voltage greater than V^+ or less than V^- may cause destructive device latchup. For this reason it is recommended that the power supply to the device be established before any inputs are applied and that in multiple systems the supply to the ICM7217/7227 be turned on first.

NOTE 3 In the ICM7217 the UP/$\overline{DOWN}$, $\overline{STORE}$, $\overline{RESET}$ and the BCD I/O as inputs have pullup or pulldown devices which consume power when connected to the opposite supply. Under these conditions, with the display off, the device will consume typically 750 μA. The ICM7227 devices do not have these pullups or pulldowns and thus are not subject to this condition.

NOTE 4 These voltages are adjusted to allow the use of thumbwheel switches for the ICM7217 versions. Note that a positive level is taken as an input logic zero for ICM7217 common-cathode versions.

TAPE RECORDER POSITION INDICATOR/ CONTROLLER (Figure 19)

This circuit shows an application which uses the up/down counting feature of the ICM7217 to keep track of tape position. This circuit is representative of the many applications of up/down counting in monitoring dimensional position. For example, an ICM7227 as a peripheral to a processor can monitor the position of a lathe bed or digitizing head, transfer the data to the processor, drive interrupts to the processor using the $\overline{\text{EQUAL}}$ or $\overline{\text{ZERO}}$ outputs, and serve as a numerical display for the processor.

In the tape recorder application, the LOAD REGISTER, $\overline{\text{EQUAL}}$ and $\overline{\text{ZERO}}$ outputs are used to control the recorder To make the recorder stop at a particular point on the tape, the register can be set with the stop point and the $\overline{\text{EQUAL}}$ output used to stop the recorder either on fast forward, play or rewind.

To make the recorder stop before the tape comes free of the reel on rewind, a leader should be used. Resetting the counter at the starting point of the tape, a few feet from the end of the leader, allows the $\overline{\text{ZERO}}$ output to be used to stop the recorder on rewind, leaving the leader on the reel.

The 1MΩ resistor and .0047 μF capacitor on the COUNT INPUT provide a time constant of about 5ms to debounce the reel switch. The Schmitt trigger on the COUNT INPUT of the ICM7217 squares up the signal before applying it to the counter. This technique may be used to debounce switch-closure inputs in other applications.

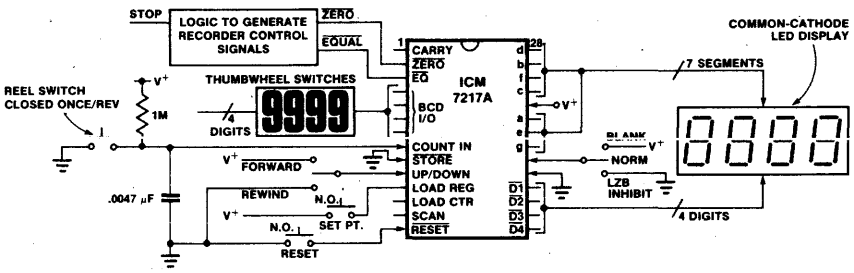

Figure 19: Recorder Indicator

PRECISION ELAPSED TIME/COUNTDOWN TIMER (Figure 20)

This circuit uses an ICM7213 precision one minute/one second timebase generator using a 4.1943 MHz crystal for generating pulses counted by an ICM7217B. The thumbwheel switches allow a starting time to be entered into the counter for a preset-countdown type timer, and allow the register to be set for compare functions. For instance, to make a 24-hour clock with BCD output the register can be preset with 2400 and the $\overline{\text{EQUAL}}$ output used to reset the counter. Note the 10k resistor connected between the LOAD COUNTER terminal and Ground. This resistor pulls the LOAD COUNTER input low when not loading, thereby inhibiting the BCD output drivers. This resistor should be eliminated and SW4 replaced with an SPDT center-off switch if the BCD outputs are to be used. This technique may be used on any 3-level input. The 100k pullup resistor on the count input is used to ensure proper logic voltage swing from the ICM7213. For a less expensive (and less accurate) timebase, an ICM7555 timer may be used in a configuration like that shown in Figure 18 to generate a 1Hz reference.

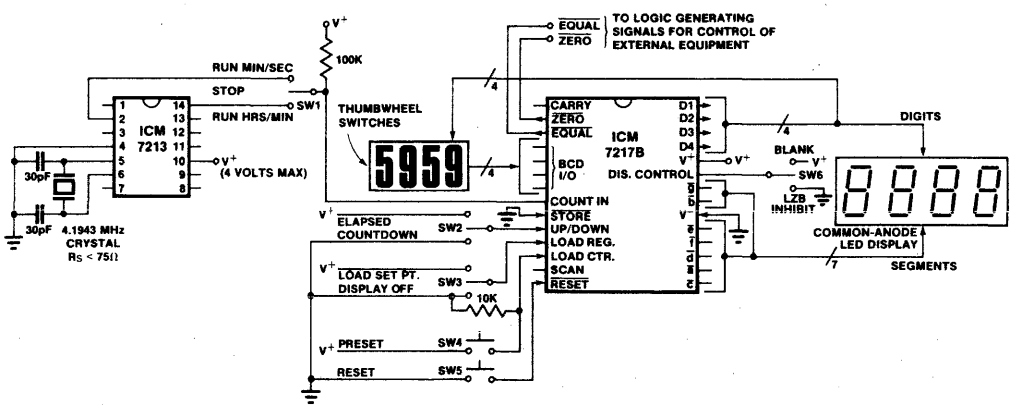

Figure 20: Precision Timer

© IC MASTER 1984

8-DIGIT UP/DOWN COUNTER (Figure 22)

This circuit shows how to cascade counters and retain correct leading zero blanking. The NAND gate detects whether a digit is active since one of the two segments $\overline{a}$ or $\overline{b}$ is active on any unblanked number. The flip flop is clocked by the least significant digit of the high order counter, and if this digit is not blanked, the Q output of the flip flop goes high and turns on the NPN transistor, thereby inhibiting leading zero blanking on the low order counter.

It is possible to use separate thumbwheel switches for presetting, but since the devices load data with the oscillator free-running, the multiplexing of the two devices is difficult to synchronize. This presents no problems with the ICM7227 devices, since the two devices are operated as peripherals to a processor.

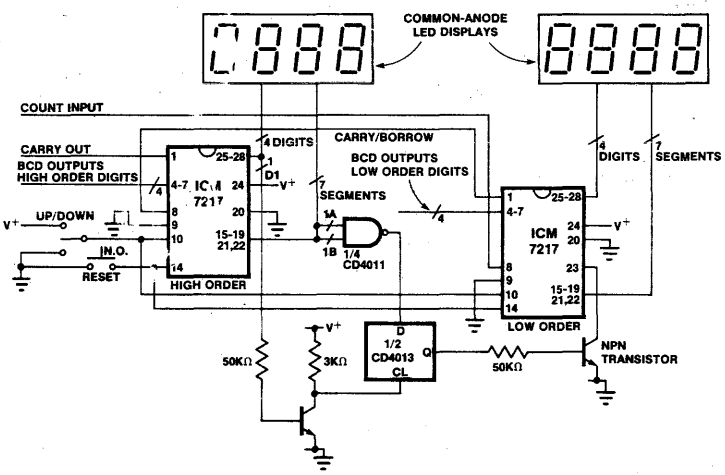

Figure 22: 8 Digit Up/Down Counter

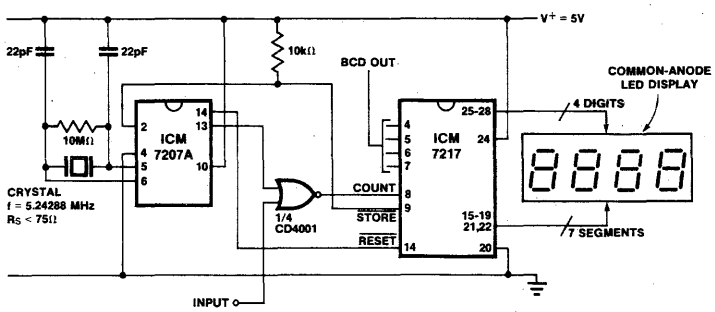

Figure 23: Precision Frequency Counter (~1MHz Maximum)

ICM7218 Series
CMOS Universal 8 Digit LED Driver System

FEATURES
- **Total circuit integration on chip includes:**
  - **a) Digit and segment drivers**
  - **b) All multiplex scan circuitry**
  - **c) 8X8 static memory**
  - **d) 7 segment Hexadecimal and Code B decoders**
- **Output drive suitable for large LED displays**
- **Both common anode and common cathode LED drive versions**
- **Single 5 volt supply required**
- **Data retention to 2 volts supply**
- **Shutdown feature - turns off display and puts chip into very low power dissipation mode**
- **Pin selectable choice of 2 seven segment decoders - Hexa or Code B - or no decode**
- **Microprocessor compatible**
- **Serial and random access versions**
- **Decimal point drive on each digit**

GENERAL DESCRIPTION
The ICM7218 series of universal LED driver systems provide, in a single package, all the circuitry necessary to interface most common microprocessors or digital systems and an LED display. Included on chip is an 8x8 static memory array providing storage for the displayed information, 2 types of 7 segment decoders, all the multiplex scan circuitry and the high power digit and segment drivers.

ORDERING INFORMATION

Typical App.	Order Part Number	Display Option	Package
Serial Access	ICM7218A IJI	Common Anode	28 Lead CERDIP
	ICM7218B IPI	Common Cathode	28 Lead Plastic
Random Access	ICM7218C IJI	Common Anode	28 Lead CERDIP
	ICM7218D IPI	Common Cathode	28 Lead Plastic
	ICM7218E IDL	Common Anode	40 Lead Ceramic

CHIP TOPOGRAPHY ICM7218A

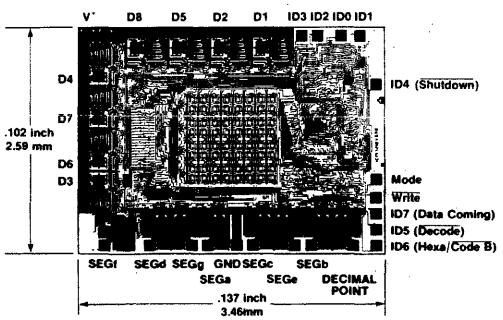

The ICM7218A and ICM7218B are intended to be used primarily in microprocessor systems. Data is read directly from the I/O bus line from the microprocessor. 2 Control lines (Write, and Mode) define chip select, which reads either 4 bits of control information (Data Coming, Shutdown, Decode, Hexa or Code B Decoding) or 8 bits of Display Input Data. Display Input Data (8 words, 8 bits each) is automatically sequenced into the memory on successive positive going Write pulses. Data may be displayed either directly or decoded in Hexadecimal or Code B formats. The ICM7218A drives a common anode display while the ICM7218B drives a common cathode display. (See Block Diagram 1)

The ICM7218C and ICM7218D feature 2 lines for control information (Write, Three Level Input; Hexa, Code B, Shutdown), 4 lines for Input Data and 3 lines for Data Addressing of each of eight data memory locations.

Data is written into memory by setting up a Data Address memory location, defining 4 lines of Input Data and then strobe the Write line low. The Three Level Control Input is independent of the Write instruction. Only Hexadecimal and Code B decoding are available for the Display Outputs. The ICM7218C drives a common anode display, the ICM7218D a common cathode display. (See Block Diagram 2)

The ICM7218E provides 4 separate lines for control information (Write, Hexa-Code B, Decode, Shutdown), 8 lines for input data, and 3 lines for digit address. Data is written into the memory by setting up a Data Address memory location, defining 8 lines of Input Data, and then strobe the Write line low. Control information is on separate lines and is independent of the Write instruction. Data may be displayed either directly or decoded in Hexadecimal or Code B formats. The ICM7218E drives a common anode display. (See Block Diagram 3)

PIN CONFIGURATION (OUTLINE DRAWING JI)

ICM7218A

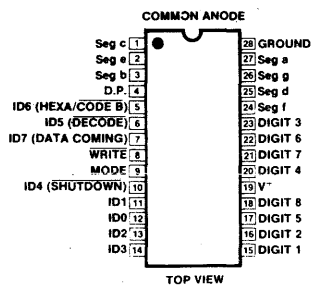

Note: Pins 5, 6, 7, 10 are under control of Mode pin 9. See page 6-60.

See page 6-57 for other device configurations.

© IC MASTER 1984

ABSOLUTE MAXIMUM RATINGS

Supply Voltage 6V
Digit Output Current 300mA
Segment Output Current 50mA
Input Voltage (any terminal) ..... V^+ +0.3V to V^- −0.3V NOTE 1
Power Dissipation (28 Pin CERDIP) ..... 1 W NOTE 2
Power Dissipation (28 Pin Plastic) ..... 0.5 W NOTE 2
Power Dissipation (40 Pin Ceramic) ..... 1 W NOTE 2
Operating Temperature Range ..... -20°C to +85°C
Storage Temperature Range ..... −55°C to +125°C

Stresses above those listed under Absolute Maximum Ratings may cause permanent damage to the device. These are stress ratings only, and functional operation of the device at these or any other conditions above those indicated in the operational sections of the specifications is not implied. Exposure to absolute maximum rating conditions for extended periods may affect device reliability.

NOTE 1: Due to the SCR structure inherent in the CMOS process used to fabricate these devices, connecting any terminal to a voltage greater than V^+ or less than GROUND may cause destructive device latchup. For this reason it is recommended that no inputs from sources operating on a different power supply be applied to the device before its own supply is established, and when using multiple supply systems the supply to the ICM7218 should be turned on first.

NOTE 2: These limits refer to the package and will not be obtained during normal operation. Derate above 50°C by 25mW per °C.

SYSTEM ELECTRICAL CHARACTERISTICS V^+ = 5V ±10%; T_A = 25°C, Test Circuit, Display Diode Drop 1.7V

PARAMETER	SYMBOL	CONDITIONS	MIN	TYP	MAX	UNITS
Operating Voltage	V^+		4		6	V
		Power Down Mode	2		6	V
Quiescent Supply Current	I_Q	Shutdown (Note 3)	6	10	300	μA
Operating Supply Current	I_{OP}	Decoder On, Outputs Open Ckt	250		950	μA
		No Decode, Outputs Open Ckt	200		450	μA
Digit Drive Current	I_{DIG}	Common Anode Vout = V^+ −2.0	−170			mA
		Common Cathode Vout = V^- +1V	50			mA
Digit Leakage Current	I_{DLK}				100	μA
Peak Segment Drive Current	I_{SEG}	Common Anode Vout = V^- +1.5V	20	25		mA
		Common Cathode Vout = V^+ −2.0V	−10			mA
Segment Leakage Current	I_{SLK}				50	μA
Display Scan Rate	f_{MUX}	Per Digit		250		Hz
Three Level Input						
Logical "1" Input Voltage	V_{INH}	Hexidecimal ICM7218C, D (Pin 9)	4.0			V
Floating Input	V_{INF}	Code B ICM7218C, D (Pin 9)	2.0		3.0	V
Logical "0" Input Voltage	V_{INL}	Shutdown ICM7218C, D (Pin 9)			1.75	V
Three Level Input Impedance	Z_{IN}	Note 3		100		kΩ
Logical "1" Input Voltage	V_{IH}		3.5			V
Logical "0" Input Voltage	V_{IL}				.8	V
Write Pulse Width (Negative)	t_w	7218A, B	550	400		ns
Write Pulse Width (Positive)	$t_{\overline{w}}$	7218A, B	550	400		ns
Write Pulse Width (Negative)	t_w	7218C, D, E	400	250		ns
Write Pulse Width (Positive)	$t_{\overline{w}}$	7218C, D, E	400	250		ns
Mode Hold Time	t_{mh}	7218A,B		150		ns
Mode Pulse Width	t_m	7218A, B	500			ns
Data Set Up Time	t_{ds}		500			ns
Data Hold Time	t_{dh}		25			ns
Digit Address Set Up Time	t_{das}	ICM7218C, D, E	500			ns
Digit Address Hold Time	t_{dah}	ICM7218C, D, E	100			ns
Data Input Impedance	Z_{IN}	5-10 pF Gate Capacitance		10^{10}		Ohms

NOTE 3: In the ICM7218C and D (random access versions) the Hexa/Code B/$\overline{\text{Shutdown}}$ Input (Pin 9) has internal biasing resistors to hold it at $V^+/2$ when Pin 9 is open circuited These resistors consume power and result in a Quiescent Supply Current (I_Q) of typically 50μA. The ICM7218A, B, and E devices do not have these biasing resistors and thus are not subject to this condition.

© IC MASTER 1984

BLOCK DIAGRAMS

ICM7218A, ICM7218B

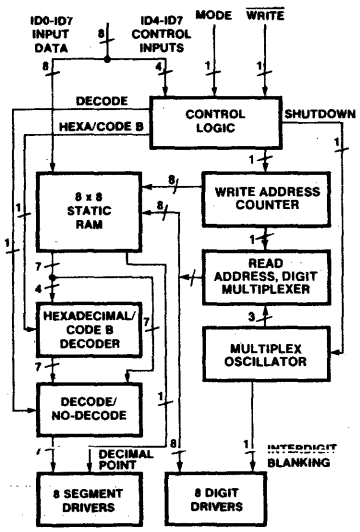

1

ICM7218C, ICM7218D

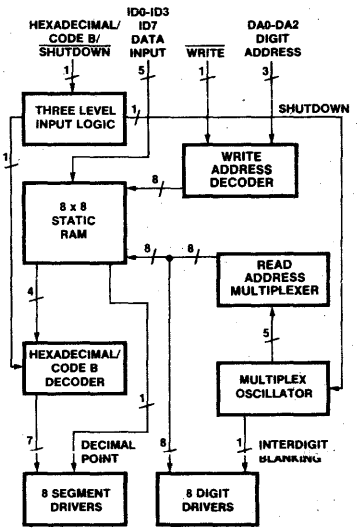

2

ICM7218E

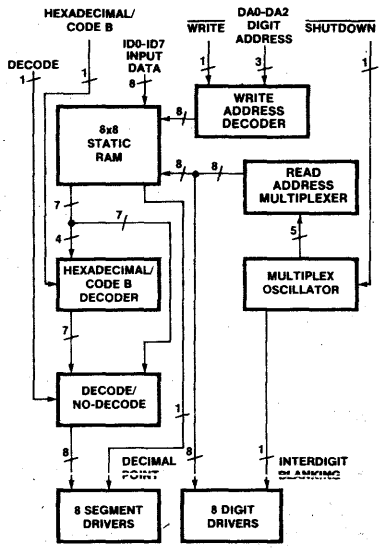

3

PIN CONFIGURATIONS (See page 6-65 for ICM7218A)

ICM7218B* (OUTLINE DRAWING PI)

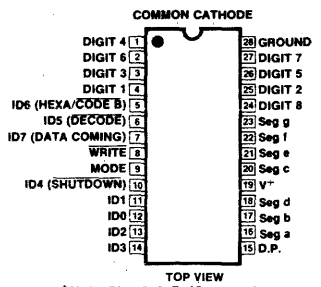

*Note: Pins 5, 6, 7, 10 are under control of Mode pin 9. See page 6-60.

ICM7218C (OUTLINE DRAWING JI)

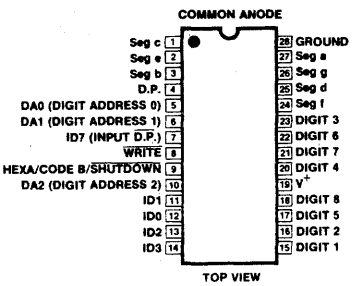

ICM7218D (OUTLINE DRAWING PI)

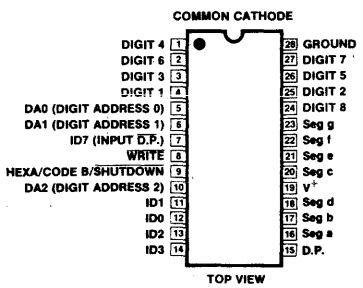

ICM7218E (OUTLINE DRAWING DL)

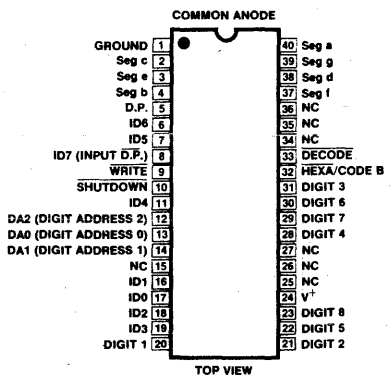

© IC MASTER 1984

ICM7224 (LCD)
ICM7225 (LED)
4½-Digit Counter/ Decoder/Drivers

FEATURES

- High frequency counting—guaranteed 15MHz, typically 25MHz at 5V
- Low power operation—less than 100μW quiescent
- STORE and RESET inputs permit operation as frequency or period counter
- True COUNT INHIBIT disables first counter stage
- CARRY output for cascading four-digit blocks
- Schmitt-trigger on the COUNT input allows operation in noisy environments or with slowly changing inputs
- Leading Zero Blanking INput and OUTput for correct leading zero blanking with cascaded devices
- LCD devices provide complete onboard oscillator and divider chain to generate backplane frequency, or backplane driver may be disabled allowing segments to be slaved to a master backplane signal
- LED devices provide BRighTness input which can function digitally as a display enable or with a single potentiometer as a continuous display brightness control

GENERAL DESCRIPTION

The ICM7224 and ICM7225 devices constitute a family of high-performance CMOS 4 1/2-digit counters, including decoders, output latches, display drivers, count inhibit, leading zero blanking, and reset circuitry.

The counter section provides direct static counting, guaranteed from DC to 15 MHz, using a 5V ±10% supply over the operating temperature range. At normal ambient temperatures, the devices will typically count up to 25 MHz. The COUNT input is provided with a Schmitt trigger to allow operation in noisy environments and correct counting with slowly changing inputs. These devices also provide count inhibit, store and reset circuitry, which allow a direct interface with the ICM7207/A to implement a low cost, low power frequency counter with a minimum component count.

These devices also incorporate several features intended to simplify cascading four-digit blocks. The CARRY output allows the counter to be cascaded, while the Leading Zero Blanking INput and OUTput allows correct Leading Zero Blanking between four-decade blocks. The BackPlane driver of the LCD devices may be disabled, allowing the segments to be slaved to another backplane signal, necessary when using an eight or twelve digit, single backplane display. In LED systems, the BRighTness input to several ICM7225 devices may be ganged to one potentiometer.

The ICM7224/ICM7225 family are packaged in a standard 40-pin dual-in-line plastic package.

TYPICAL APPLICATION (UNIT COUNTER)

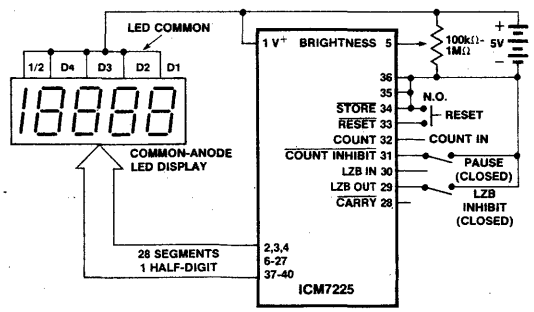

PIN CONFIGURATION (outline dwg PL)

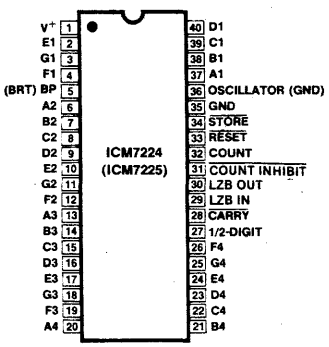

ORDERING INFORMATION

	ORDER PART NUMBER	COUNT OPTION
LCD DISPLAY	ICM7224 IPL	19999
	ICM7224A IPL	15959
LED DISPLAY	ICM7225 IPL	19999
	ICM7225A IPL	15959

Evaluation Kits, order ICM7224 EV/Kit or ICM7225 EV/Kit

DIGITAL

Intersil

© IC MASTER 1984

INTERSIL

ABSOLUTE MAXIMUM RATINGS

Power Dissipation (Note 1) ..... 0.5 W @ 70°C
Supply Voltage (V^+) 6.5V
Input Voltage (Any Terminal) (Note 2) ..... V^+ +0.3V, −0.3V
Operating Temperature Range ..... −20°C to +85°C
Storage Temperature Range ..... −55°C to +125°C

NOTE 1: This limit refers to that of the package and will not be obtained during normal operation.
NOTE 2: Due to the SCR structure inherent in the CMOS process, connecting any terminal to voltages greater than V^+ or less than GROUND may cause destructive device latchup. For this reason, it is recommended that no inputs from sources operating on a different power supply be applied to the device before its supply is established, and that in multiple supply systems, the supply to the ICM7224/ICM7225 be turned on first.

Stresses above those listed under "Absolute Maximum Ratings" may cause permanent damage to the device. These are stress ratings only and functional operation of the device at these or any other conditions above those indicated in the operational sections of the specifications is not implied. Exposure to absolute maximum rating conditions for extended periods may affect device reliability.

OPERATING CHARACTERISTICS

(All Parameters measured with V^+ = 5V unless otherwise indicated)

ICM7224 CHARACTERISTICS

PARAMETER	SYMBOL	CONDITIONS	MIN	TYP	MAX	UNITS
Operating current	I_{op}	Test circuit, Display blank		10	50	μA
Operating supply voltage range	V^+		3	5	6	V
OSCILLATOR input current	I_{OSCI}	Pin 36		±2	±10	μA
Segment rise/fall time	t_{rfs}	C_{load} = 200pF		0.5		μs
BackPlane rise/fall time	t_{rfb}	C_{load} = 5000pF		1.5		μs
Oscillator frequency	f_{osc}	Pin 36 Floating		19		KHz
Backplane frequency	f_{bp}	Pin 36 Floating		150		Hz

ICM7225 CHARACTERISTICS

PARAMETER	SYMBOL	CONDITIONS	MIN	TYP	MAX	UNITS
Operating current display off	I_{OPQ}	Pin 5 (BRighTness) at GROUND Pins 29, 31-34 at V^+		10	50	μA
Operating supply voltage range	V^+		4	5	6	V
Operating current	I_{OP}	Pin 5 at V^+, Display 18888		200		mA
Segment leakage current	I_{SLK}	Segment Off		±0.01	±1	μA
Segment on current	I_{SEG}	Segment On, Vout = + 3V	5	8		mA
Half-digit on current	I_H	Half-digit on, Vout = + 3V	10	16		mA

FAMILY CHARACTERISTICS

PARAMETER	SYMBOL	CONDITIONS	MIN	TYP	MAX	UNITS
Input Pullup Currents	I_P	Pins 29, 31, 33, 34 Vout = V^+- 3V		10		μA
Input High Voltage	V_{IH}	Pins 29, 31, 33, 34	3			V
Input Low Voltage	V_{IL}	Pins 29, 31, 33, 34			1	V
$\overline{\text{COUNT}}$ Input Threshold	V_{CT}			2		V
$\overline{\text{COUNT}}$ Input Hysteresis	V_{CH}			0.5		V
Output High Current	I_{OH}	$\overline{\text{CARRY}}$ Pin 28 Leading Zero Blanking OUT Pin 30 Vout = V^+ − 3V	350	500		μA
Output Low Current	I_{OL}	$\overline{\text{CARRY}}$ Pin 28 Leading Zero Blanking OUT Pin 30 Vout = + 3V	350	500		μA
Count Frequency	f_{count}	4.5V < V^+ < 6V	0	DC-25	15	MHz
$\overline{\text{STORE}}$, $\overline{\text{RESET}}$ Minimum Pulse Width	t_S, t_R		3			μs

DIGITAL

Intersil

© IC MASTER 1984

APPLICATIONS

1. Two-Hour Precision Timer

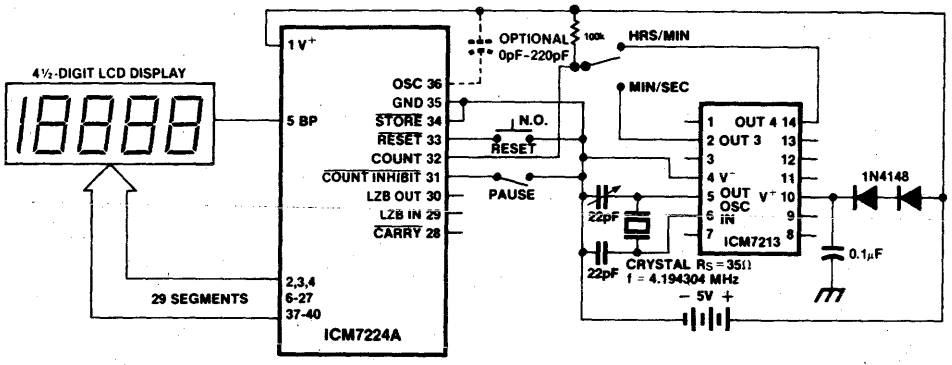

2. Eight-Digit Precision Frequency Counter

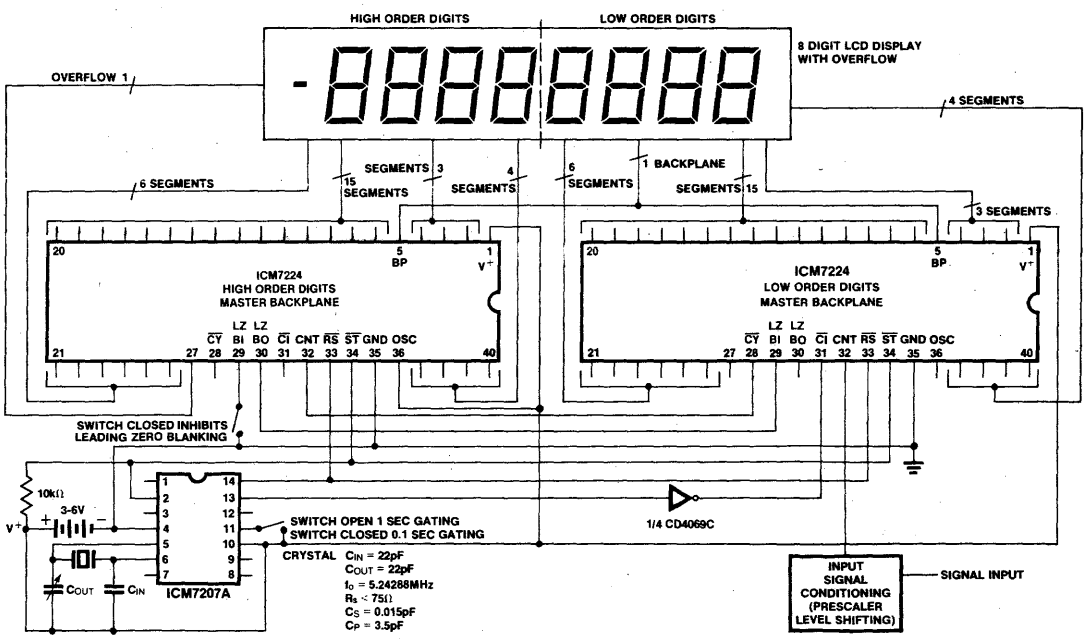

TYPICAL CHARACTERISTICS

7224 OPERATING SUPPLY CURRENT AS A FUNCTION OF SUPPLY VOLTAGE

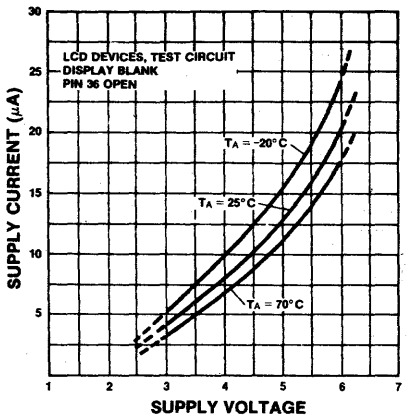

7225 LED SEGMENT CURRENT AS A FUNCTION OF OUTPUT VOLTAGE

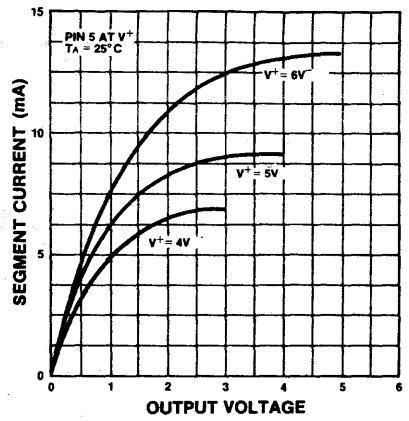

7224 BACKPLANE FREQUENCY AS A FUNCTION OF SUPPLY VOLTAGE

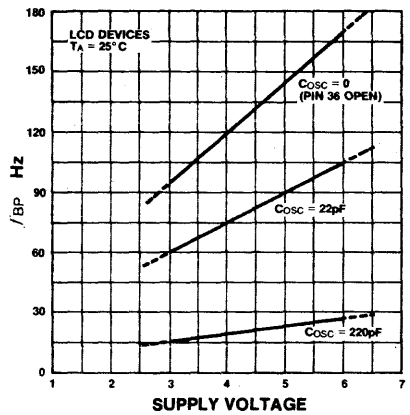

7225 OPERATING POWER (LED DISPLAY) AS A FUNCTION OF SUPPLY VOLTAGE

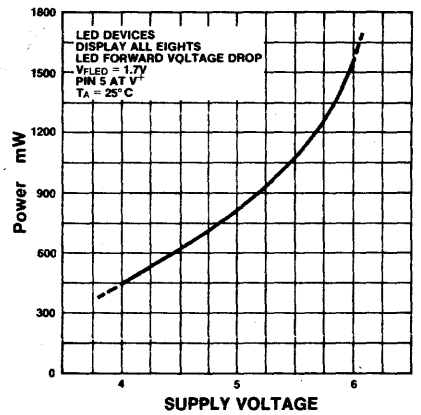

7224 BACKPLANE FREQUENCY AS A FUNCTION OF OSCILLATOR CAPACITOR C_{OSC}

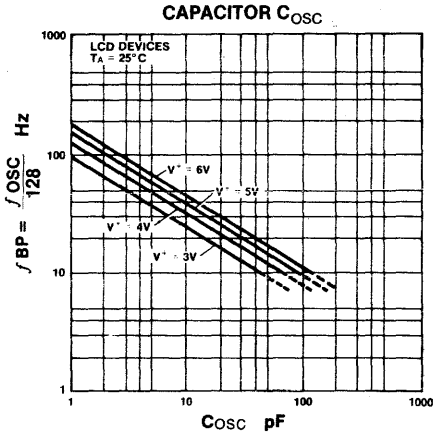

7225 LED SEGMENT CURRENT AS A FUNCTION OF BRIGHTNESS CONTROL VOLTAGE

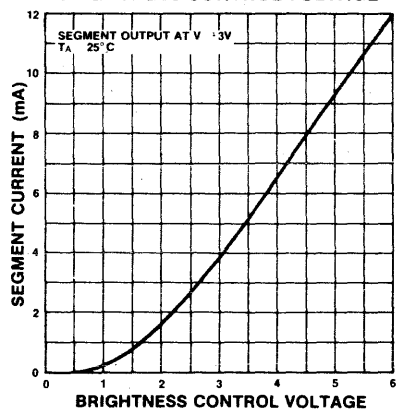

© IC MASTER 1984

MAXIMUM COUNT FREQUENCY (TYPICAL) AS A FUNCTION OF SUPPLY VOLTAGE

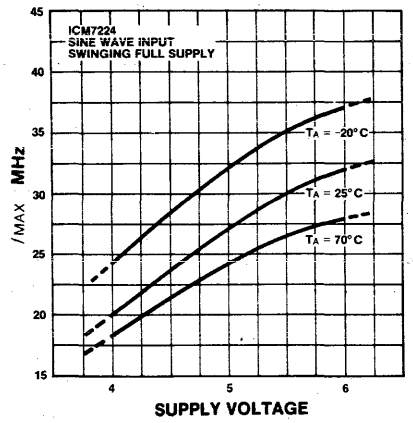

SUPPLY CURRENT AS A FUNCTION OF COUNT FREQUENCY

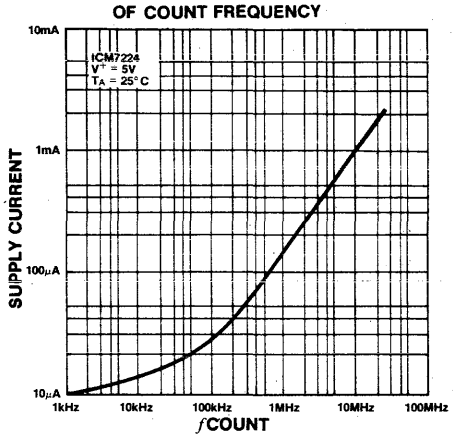

BLOCK DIAGRAMS

ICM7224 (A)

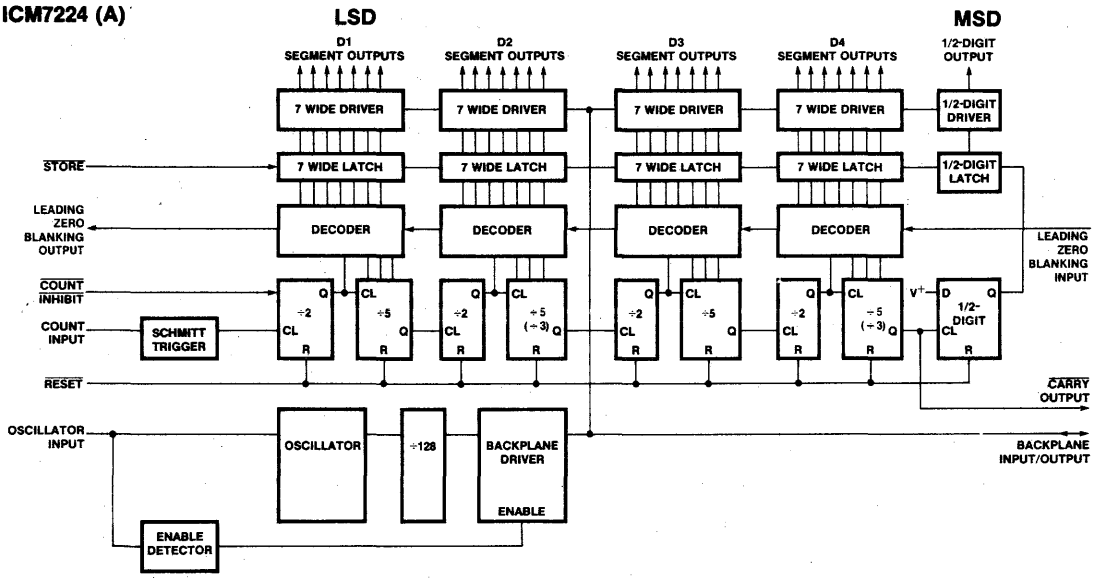

ICM7225 (A)

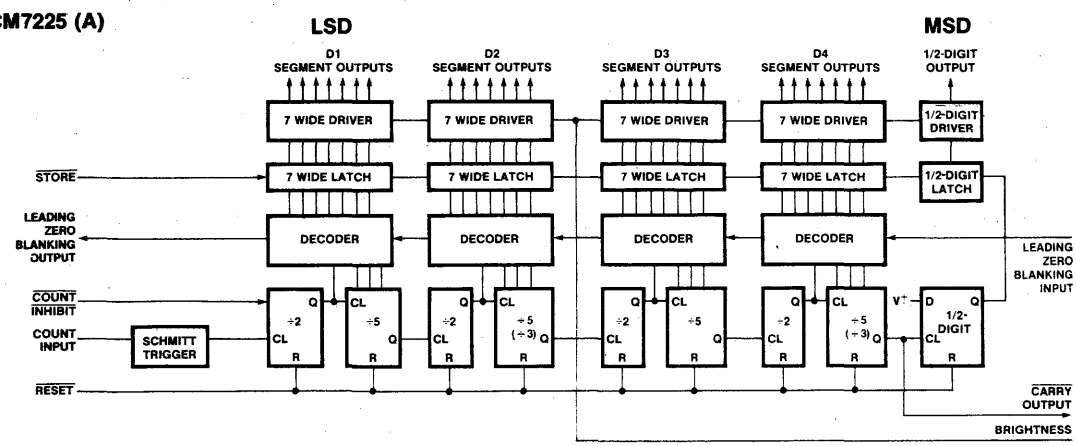

© IC MASTER 1984

CONTROL INPUT DEFINITIONS

In this table, V^+ and GROUND are considered to be normal operating input logic levels. Actual input low and high levels are specified in the Operating Characteristics. For lowest power consumption, input signals should swing over the full supply.

INPUT	TERMINAL	VOLTAGE	FUNCTION
Leading Zero Blanking INput	29	V^+ or Floating GROUND	Leading Zero Blanking Enabled Leading Zeroes Displayed
$\overline{\text{COUNT INHIBIT}}$	31	V^+ or Floating GROUND	Counter Enabled Counter Disabled
$\overline{\text{RESET}}$	33	V^+ or Floating GROUND	Inactive Counter Reset to 0000
$\overline{\text{STORE}}$	34	V^+ or Floating GROUND	Output Latches not Updated Output Latches Updated

DESCRIPTION OF OPERATION

LCD Devices

The LCD devices in the family (ICM7224 and ICM7224A) provide outputs suitable for driving conventional 4½-digit by seven segment LCD displays, including 29 individual segment drivers, backplane driver, and a self contained oscillator and divider chain to generate the backplane frequency.

The segment and backplane drivers each consist of a CMOS inverter, with the n- and p-channel devices ratioed to provide identical on resistances, and thus equal rise and fall times. This eliminates any dc component which could arise from differing rise and fall times, and ensures maximum display life.

The backplane output devices can be disabled by connecting the OSCILLATOR input (pin 36) to GROUND. This synchronizes the 29 segment outputs directly with a signal input at the BP terminal (pin 5) and allows cascading of several slave devices to the backplane output of one master device. The backplane may also be derived from an external source. This allows the use of displays with characters in multiples of four and a single backplane. A slave device will represent a load of approximately 200 pF (comparable to one additional segment). The limitation on the number of devices that can be slaved to one master device backplane driver is the additional load represented by the larger backplane of displays of more than four digits, and the effect of that load on the backplane rise and fall times. A good rule of thumb to observe in order to minimize power consumption is to keep the rise and fall times less than about 5 microseconds. The backplane driver devices of one device should handle the backplane to a display of 16 one-half-inch characters without the rise and fall times exceeding 5μs (ie, 3 slave devices and the display backplane driven by a fourth master device). It is recommended that if more than four devices are to be slaved together, that the backplane signal be derived externally and all the ICM7224 devices be slaved to it.

This external signal should be capable of driving very large capacitive loads with short (1-2μs) rise and fall times. The maximum frequency for a backplane signal should be about 150Hz, although this may be too fast for optimum display response at lower display temperatures, depending on the display used.

The onboard oscillator is designed to free run at approximately 19KHz, at microampere power levels. The oscillator frequency is divided by 128 to provide the backplane frequency, which will be approximately 150Hz with the oscillator free-running. The oscillator frequency may be reduced by connecting an external capacitor between the OSCillator terminal (pin 36) and V^+; see the plot of oscillator/backplane frequency in "Typical Characteristics" for detailed information.

The oscillator may also be overdriven if desired, although care must be taken to insure that the backplane driver is not disabled during the negative portion of the overdriving signal (which could cause a d.c. component to the display). This can be done by driving the OSCILLATOR input between the positive supply and a level out of the range where the backplane disable is sensed, about one fifth of the supply voltage above the negative supply. Another technique for overdriving the oscillator (with a signal swinging the full supply) is to skew the duty cycle of the overdriving signal such that the negative portion has a duration shorter than about one microsecond. The backplane disable sensing circuit will not respond to signals of this duration.

LED Devices

The LED devices in the family (ICM7225, ICM7225A) provide outputs suitable for directly driving 4½-digit by seven segment common-anode LED displays, including 28 individual segment drivers and one half-digit driver, each consisting of a low-leakage current-controlled open-drain n-channel transistor.

The drain current of these transistors can be controlled by varying the voltage at the BRighTness input (pin 5). The voltage at this pin is transferred to the gates of the output devices for "on" segments, and thus directly modulates the transistor's "on" resistance. A brightness control can be easily implemented with a single potentiometer controlling the voltage at pin 5, connected as in Figure 3. The potentiometer should be a high value (100kΩ to 1MΩ) to minimize I^2R power consumption, which can be significant when the display is off.

The BRighTness input may also be operated digitally as a display enable; when at V^+, the display is fully on, and at ground, fully off. The display brightness may also be controlled by varying the duty cycle of a signal swinging between the two supplies at the BRighTness input.

Note that the LED devices have two connections for ground; both should be connected. The double connection is necessary to minimize effects of bond wire resistance with the large total display currents possible.

© IC MASTER 1984

When operating the LED devices at higher temperatures and/or higher supply voltages, the device power dissipation may need to be reduced to prevent excessive chip temperatures. The maximum power dissipation is 1 watt at 25°C, derated linearly above 35°C to 500mW at 70°C (−15mW/°C above 35°C). Power dissipation for the device is given by:

$$P = (V^+ - V_{FLED}) \times (I_{SEG}) \times (n_{SEG})$$

where V_{FLED} is the LED forward voltage drop, I_{SEG} is segment current, and n_{SEG} is the number of "on" segments. It is recommended that if the device is to be operated at elevated temperatures the segment current be limited by use of the BRighTness input to keep power dissipation within the limits described above.

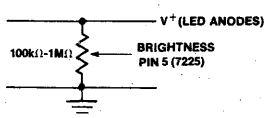

Figure 3: Brightness Control

COUNTER SECTION

The devices in the ICM7224/ICM7225 family implement a four-digit ripple carry resettable counter, including a Schmitt trigger on the COUNT input and a $\overline{\text{CARRY}}$ output. Also included is an extra D-type flip-flop, clocked by the $\overline{\text{CARRY}}$ signal and outputting to the half-digit segment driver, which can be used as either a true half-digit or as an overflow indicator. The counter will index on the negative-going edge of the signal at the COUNT input, while the $\overline{\text{CARRY}}$ output provides a negative-going edge following the count which indexes the counter from 9999 (or 5959) to 10000. Once the half-digit flip-flop has been clocked, it can only be reset (with the rest of the counter) by a negative level at the $\overline{\text{RESET}}$ terminal, pin 33. However, the four decades will continue to count in a normal fashion after the half-digit is set, and subsequent $\overline{\text{CARRY}}$ outputs will not be affected.

A negative level at the $\overline{\text{COUNT INHIBIT}}$ input disables the first divide-by-two in the counter chain without affecting its clock. This provides a true inhibit, not sensitive to the state of the COUNT input, which prevents false counts that can result from using a normal logic gate to prevent counting.

Each decade of counter drives directly into a four-to-seven decoder which develops the seven-segment output code. The output data is latched at the driver; when the $\overline{\text{STORE}}$ pin is low, these latches are updated, and when high or floating, the latches hold their contents.

The decoders also include zero detect and blanking logic to provide leading zero blanking. When the Leading Zero Blanking INput is floating or at a positive level, this circuitry is enabled and the device will blank leading zeroes; when low, or the half-digit is set, leading zero blanking is inhibited, and zeroes in the four digits will be displayed. The Leading Zero Blanking OUTput is provided to allow cascaded devices to blank leading zeroes correctly. This output will assume a positive level only when all four digits are blanked; this can only occur when the Leading Zero Blanking INput is at a positive level and the half-digit is not set.

For example, in an eight-decade counter with overflow using two ICM7224/ICM7225 devices, the Leading Zero Blanking OUTput of the high order digit device would be connected to the Leading Zero Blanking INput of the low order digit device. This will assure correct leading zero blanking for all eight digits.

The $\overline{\text{STORE}}$, $\overline{\text{RESET}}$, $\overline{\text{COUNT INHIBIT}}$, and Leading Zero Blanking INputs are provided with pullup devices, so that they may be left open when a positive level is desired. The $\overline{\text{CARRY}}$ and Leading Zero Blanking OUTputs are suitable for interfacing to CMOS logic in general, and are specifically designed to allow cascading of ICM7224 or ICM7225 devices in four-digit blocks.

DISPLAY WAVEFORMS

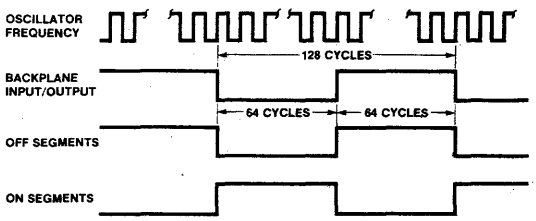

TEST CIRCUIT

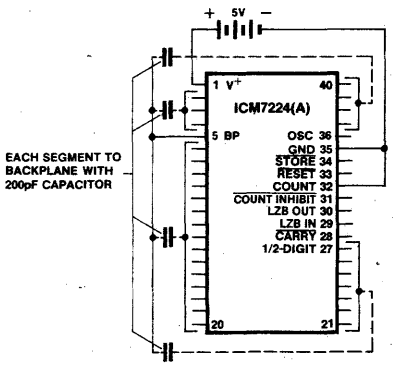

SEGMENT ASSIGNMENT AND DISPLAY FONT

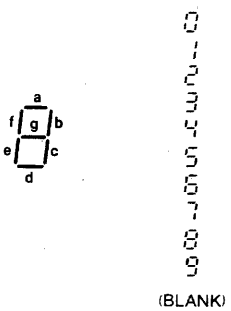

© IC MASTER 1984

ICM7226A/B

10MHz Universal Counter System for LED Displays

FEATURES

- **CMOS design for very low power**
- **Output drivers directly drive both digits and segments of large 8 digit LED displays. Both common anode and common cathode versions are available**
- **Measures frequencies from DC to 10MHz; periods from 0.5μs to 10s**
- **Stable high frequency oscillator uses either 1MHz or 10MHz crystal**
- **Control signals available for external systems operation**
- **Multiplexed BCD outputs**

APPLICATIONS

- **Frequency Counter**
- **Period Counter**
- **Unit Counter**
- **Frequency Ratio Counter**
- **Time Interval Counter**

ORDERING INFORMATION

DISPLAY	DEVICE	PACKAGE	ORDER NUMBER
Common Anode	ICM7226A	CERDIP	ICM7226AIJL
		DICE	ICM7226A/D
Common Cathode	ICM7226B	Plastic	ICM7226BIPL
		DICE	ICM7226B/D

NOTE: An evaluation kit is available for these devices — order ICM7226AEV/KIT.

GENERAL DESCRIPTION

The ICM7226 is a fully integrated Universal Counter and LED display driver. It combines a high frequency oscillator, a decade timebase counter, an 8 decade data counter and latches, a 7 segment decoder, digit multiplexer, and segment and digit drivers which can directly drive large LED displays. The counter inputs accept a maximum frequency of 10MHz in **frequency** and **unit counter** modes and 2MHz in the other modes. Both inputs are digital inputs. In many applications, amplification and level shifting will be required to obtain proper digital signals for these inputs.

The ICM7226 can function as a frequency counter, period counter, frequency ratio (f_A/f_B) counter, time interval counter or a totalizing counter. The devices require either a 10MHz or 1MHz crystal timebase, or if desired an external timebase can also be used. For **period** and **time interval**, the 10MHz timebase gives a 0.1μsec resolution. In **period average** and **time interval average**, the resolution can be in the nanosecond range. In the **frequency** mode, the user can select accumulation time of 10ms, 100ms, 1s and 10s. With a 10s accumulation time, the frequency can be displayed to a resolution of 0.1Hz. There is a 0.2s interval between measurements in all ranges. Control signals are provided to enable gating and storing of prescaler data.

Leading zero blanking has been incorporated with frequency display in kHz and time in μs. The display is multiplexed at a 500Hz rate with a 12.2% duty cycle for each digit. The ICM7226A is designed for common anode display with typical peak segment currents of 25mA, and the ICM7226B is designed for common cathode displays with typical segment currents of 12mA. In the **display off** mode, both digit drivers & segment drivers are turned off, allowing the display to be used for other functions.

PIN CONFIGURATION (outline dwgs JL, PL)

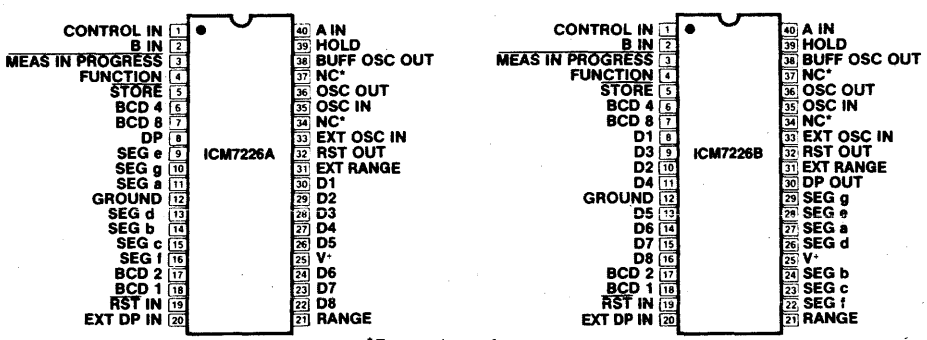

*For maximum frequency stability, connect to V^+ or GROUND

DIGITAL

Intersil

© IC MASTER 1984

ICM7226A/B

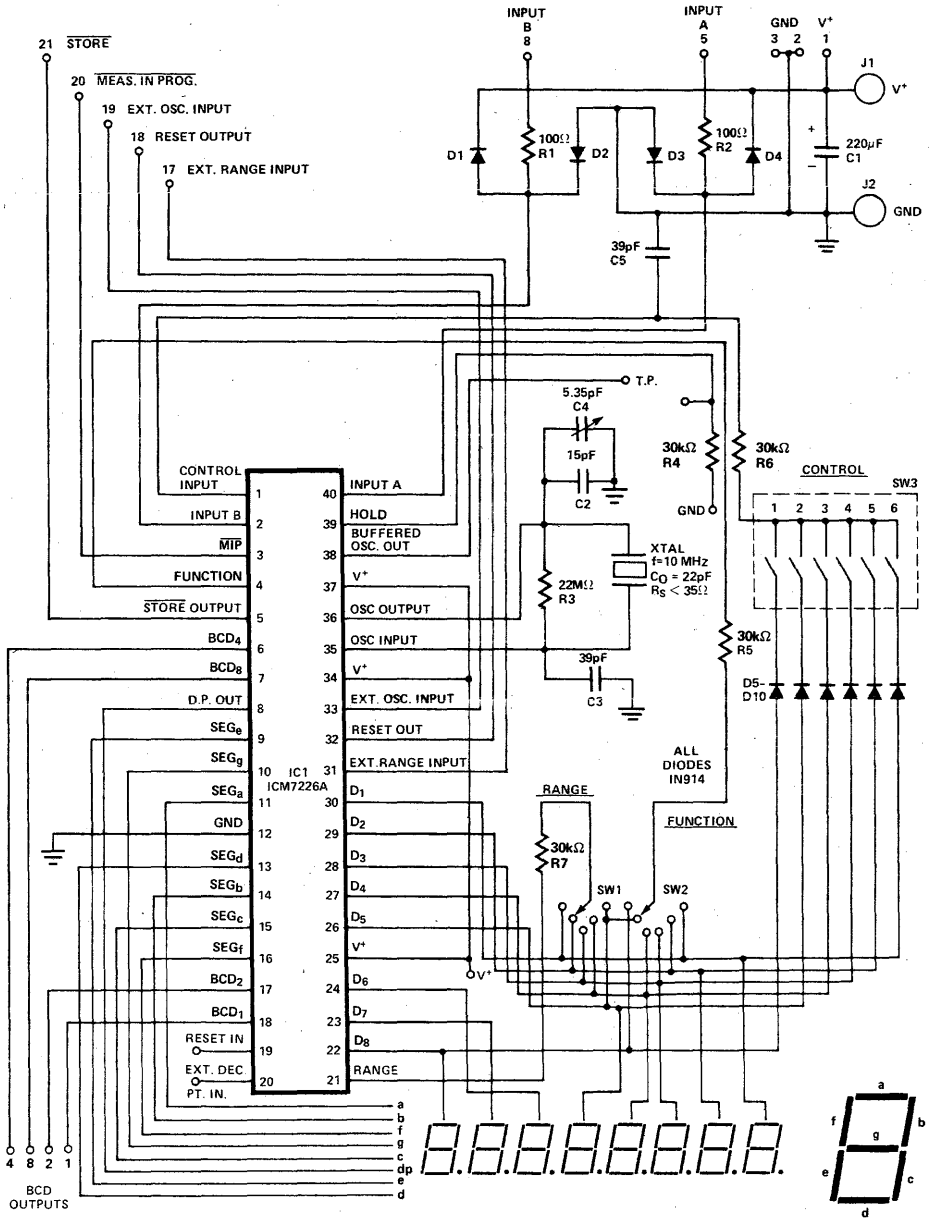

© IC MASTER 1984

ICM7231/32/33/34 Display Decoder/Drivers for Triplexed Liquid Crystal Displays

FEATURES

- **ICM7231: Drives 8 digits of 7 segments with two independent annunciators per digit. Address and data input in parallel format.**
- **ICM7232: Drives 10 digits of 7 segments with two independent annunciators per digit. Address and data input in serial format.**
- **ICM7233: Drives 4 characters of 18 segments. Address and data input in parallel format.**
- **ICM7234: Drives 5 characters of 18 segments. Address and data input in serial format.**
- **Chips provide all signals required to drive rows and columns of triplexed LCD display.**
- **Display voltage independent of power supply, allows user control of display operating voltage and temperature compensation if desired.**
- **On-chip oscillator provides all display timing.**
- **Total power consumption typically 200μW, maximum 500μW at 5V.**
- **Low-power shutdown mode retains data with 5μW typical power consumption at 5V, 1μW at 2V.**
- **Direct interfacing to high-speed microprocessors and microcomputers.**

GENERAL DESCRIPTION

The ICM7231/7234 family of integrated circuits are designed to generate the voltage levels and switching waveforms required to drive triplexed liquid-crystal displays. These chips also include input buffer and digit address decoding circuitry and contain a mask-programmed ROM allowing six bits of input data to be decoded into 64 independent combinations of the output segments of the selected digit.

The family is designed to interface to modern high performance microprocessors and microcomputers and ease system requirements for ROM space and CPU time needed to service a display.

The ICM7231 drives displays with 8 seven-segment digits with two independent annunciators per digit, accepting six data bits and three digit address bits from parallel inputs controlled by a chip select input. The data bits are subdivided into four binary code bits and two annunciator control bits. The ICM7232 drives 10 seven-segment digits with two independent annunciators per digit. To write into the display, six bits of data and four bits of digit address are clocked serially into a shift register, then decoded and written to the display.

The ICM7233 has a parallel input structure similar to the ICM7231, but the decoding and the outputs are organized to drive four 18-segment alphanumeric characters. The six data bits represent a 6-bit ASCII code.

The ICM7234 uses a serial input structure like that of the ICM7232, and drives five 18-segment characters. Again, the input bits represent a 6-bit ASCII code.

Input levels are TTL compatible, and the DATA ACCEPTED output on the serial input devices will drive one LSTTL load. The intermediate voltage levels necessary to drive the display properly are generated by an on-chip resistor string, and the output of a totally self-contained on-chip oscillator is used to generate all display timing. All devices in this family have been fabricated using Intersil's MAXCMOS® process and all inputs are protected against static discharge. Devices are packaged in a 40 pin plastic DIP.

PIN CONFIGURATIONS (outline dwg PL)

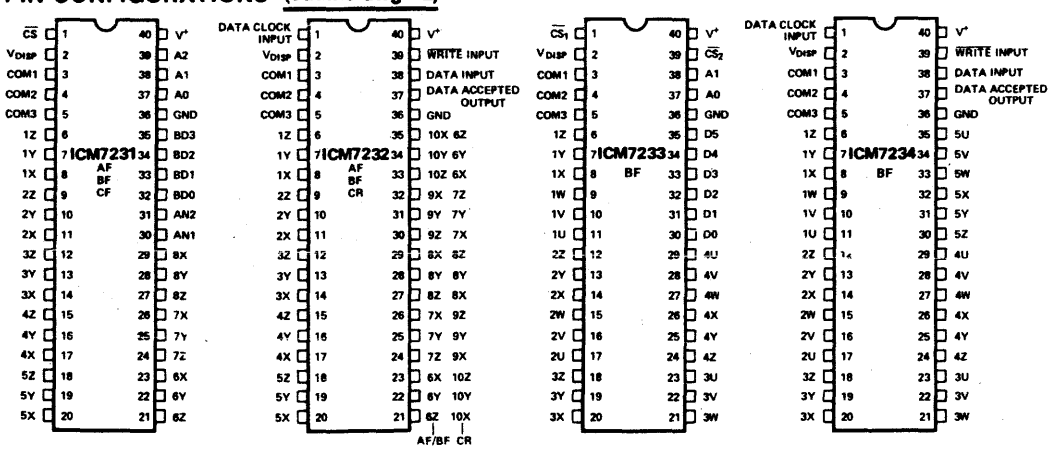

© IC MASTER 1984

OPTION TABLE AND ORDERING INFORMATION

ORDER PART* NUMBER	OUTPUT CODE	ANNUNCIATOR LOCATIONS	INPUT	OUTPUT
ICM7231AFIPL	Hexadecimal	Both Annunciators on COM3	Parallel Entry 4 bit Data 2 bit Annunciators 3 bit Address	8 Digits plus 16 Annunciators
ICM7231BFIPL	Code B			
ICM7231CFIPL	Code B	1 Annunciator COM1 1 Annunciator COM3		
ICM7232AFIPL	Hexadecimal	Both Annunciators on COM3	Serial Entry 4 bit Data 2 bit Annunciators 4 bit Address	10 Digits plus 20 Annunciators
ICM7232BFIPL	Code B			
ICM7232CRIPL	Code B	1 Annunciator COM1 1 Annunciator COM3		
ICM7233AFIPL	64 Character (ASCII) 18 Segment (Half width numbers)	No Independent Annunciators	Parallel Entry 6 bit (ASCII) Data 2 bit Address	Four Characters
ICM7233BFIPL	64 Character (ASCII) 18 Segment (Full width numbers)	No Independent Annunciators	Serial Entry 6 bit (ASCII) Data 3 bit Address	Four Characters
ICM7234AFIPL	64 Character (ASCII) 18 Segment (Half width numbers)	No Independent Annunciators	Parallel Entry 6 bit (ASCII) Data 2 bit Address	Five Characters
ICM7234BFIPL	64 Character (ASCII) 18 Segment (Full width numbers)	No Independent Annunciators	Serial Entry 6 bit (ASCII) Data 3 bit Address	Five Characters

*Dice versions also available (ICM7231AF/D, ICM7233AF/D, etc.) Introductory parts may be available only in CERDIP package. Change suffix to IJL if necessary.

ABSOLUTE MAXIMUM RATINGS

Power Dissipation[1] ..... 0.5 W @ 70°C
Supply Voltage (V^+) ..... 6.5 V
Input Voltage[2] ..... $-0.3 \leq V_{IN} \leq 6.5$
Display Voltage[2] ..... $-0.3 \leq V_{DISP} \leq +0.3$
Operating Temperature Range ..... -20°C to +85°C
Storage Temperature Range ..... -55°C to +125°C

NOTE: Stresses above those listed under Absolute Maximum Ratings may cause permanent damage to the device. These are stress ratings only, and functional operation of the device at these or any other conditions above those indicated in the operational sections of the specifications is not implied. Exposure to absolute maximum rating conditions for extended periods may affect device reliability.

Notes:
1. This limit refers to that of the package and will not be obtained during normal operation.
2. Due to the SCR structure inherent in these devices, connecting any display terminal or the display voltage terminal to a voltage outside the power supply to the chip may cause destructive device latchup. The digital inputs should never be connected to a voltage less than -0.3 volts below ground, but may be connected to voltages above V^+ but not more than 6.5 volts above GND.

ELECTRICAL CHARACTERISTICS $V^+ = 5V \pm 10\%$, $T_A = -20°C$ to $+85°C$ unless otherwise specified

PARAMETER	SYMBOL	CONDITIONS/DESCRIPTION	MIN	TYP	MAX	UNITS
Power Supply Voltage	V^+		4.5	>4	5.5	V
Data Retention Supply Voltage	V^+	Guaranteed Retention at 2V	2	1.6		V
Logic Supply Current	I^+	Current from V^+ to Ground excluding Display. $V_{DISP} = 2V$		30	100	μA
Shutdown Total Current	I_S	V_{DISP} Pin 2 Open		1	10	μA
Display Voltage Range	V_{DISP}	Ground $\leq V_{DISP} \leq V^+$	0		V^+	V
Display Voltage Setup Current	I_{DISP}	$V_{DISP} = 2V$ Current from V^+ to V_{DISP} On-Chip		15	25	μA
Display Voltage Setup Resistor Value	R_{DISP}	One of Three Identical Resistors in String	40	75		kΩ
DC Component of Display Signals		(Sample Test only)		1/4	1	% (V^+ - V_{DISP})
Display Frame Rate	f_{DISP}	See Figure 2	60	90	120	Hz
Input Low Level	V_{IL}	ICM7231, ICM7233 Pins 30-35, 37-39, 1			0.8	V
Input High Level	V_{IH}		2.0			V
Input Leakage	I_{ILK}	ICM7232, ICM7234 Pins 1, 38, 39		0.1	1	μA
Input Capacitance	C_{IN}			5		pF
Output Low Level	V_{OL}	Pin 37, ICM7232, ICM7234, $I_{OL} = 1mA$, $V^+ = 4.5V$, $I_{OH} = -500\mu A$			0.4	V
Output High Level	V_{OH}		4.1			V
Operating Temperature Range	T_{OP}	Industrial Range	-20		+85	°C

DIGITAL

Intersil

AC CHARACTERISTICS $V^+ = 5V \pm 10\%, -20°C \leq T_A \leq +85°C$

PARALLEL INPUT (ICM7231, ICM7233) See Figure 12

PARAMETER	SYMBOL	CONDITIONS/DESCRIPTION	MIN	TYP	MAX	UNITS
$\overline{\text{Chip Select}}$ Pulse Width	t_{cs}		500	350		ns
Address/Data Setup Time	t_{ds}		200			ns
Address/Data Hold Time	t_{dh}		0	-20		ns
Inter-Chip Select Time	t_{ics}		3			μs

SERIAL INPUT (ICM7232, ICM7234) See Figures 15, 16, 17

PARAMETER	SYMBOL	CONDITIONS/DESCRIPTION	MIN	TYP	MAX	UNITS
Data Clock Low Time	$t_{\overline{cl}}$		350			ns
Data Clock High Time	t_{cl}		350			ns
Data Setup Time	t_{ds}		200			ns
Data Hold Time	t_{dh}		0	-20		ns
$\overline{\text{Write}}$ Pulse Width	t_{wp}		500	350		ns
$\overline{\text{Write}}$ Pulse to Clock at Initialization	t_{wll}		1.5			μs
Data Accepted Low Output Delay	t_{odl}			200	400	ns
Data Accepted High Output Delay	t_{odh}			1.5	3	μs
Write Delay After Last Clock	t_{cws}		350			ns

TERMINAL DEFINITIONS

ICM7231 PARALLEL INPUT NUMERIC DISPLAY

TERMINAL	PIN NO.	DESCRIPTION	FUNCTION	
AN1 AN2	30 31	Annunciator 1 Control Bit Annunciator 2 Control Bit	High = ON Low = OFF	See Table 3
BD0 BD1 BD2 BD3	32 33 34 35	Least Significant Most Significant 4 Bit Binary Data Inputs	Input Data (See Table 1)	HIGH = Logical One (1) LOW = Logical Zero (0)
A0 A1 A2	37 38 39	Least Significant Most Significant 3 Bit Digit Address Inputs	Input Address (See Table 2)	
$\overline{CS}$	1	Data Input Strobe/Chip Select (Note 3)	Trailing (Positive going) edge latches data, causes data input to be decoded and sent out to addressed digit	

Note:
3. $\overline{CS}$ has a special "mid-level" sense circuit that establishes a **test** mode if it is held near 3V for several msec. Inadvertent triggering of this mode can be avoided by pulling it high when inactive. or ensuring frequent activity.

© IC MASTER 1984

ICM7233 PARALLEL INPUT ALPHA DISPLAY

TERMINAL	PIN NO.	DESCRIPTION		FUNCTION	
D0 D1 D2 D3 D4 D5	30 31 32 33 34 35	Least Significant Most Significant	6 Bit (ASCII) Data Inputs	Input Data See Table 4	HIGH = Logical One (1) LOW = Logical Zero (0)
A0 A1	37 38	Least Significant Most Significant	Address Inputs	Input Add. See Table 5	
$\overline{CS1}$ $\overline{CS2}$	39 1	Chip Select Inputs (Note 3)		Both inputs LOW load data into input latches. Rising edge of either input causes data to be latched, decoded and sent out to addressed character.	

Note:
3. $\overline{CS1}$ has a special "mid-level" sense circuit that establishes a **test** mode if it is held near 3V for several msec. Inadvertent triggering of this mode can be avoided either by pulling it high when inactive, or ensuring frequent activity.

ICM7232 and ICM7234 SERIAL DATA AND ADDRESS INPUT

TERMINAL	PIN NO.	DESCRIPTION	FUNCTION
Data Input	38	Data + Address Shift Register Input	HIGH = Logical One (1) LOW = Logical Zero (0)
$\overline{WRITE}$ Input	39	Decode, Output, and Reset Strobe	When DATA ACCEPTED Output is LOW, positive going edge of WRITE causes data in shift register to be decoded and sent to addressed digit, then shift register and control logic to be reset. When DATA ACCEPTED Output is HIGH, positive going edge of $\overline{WRITE}$ triggers reset only.
Data Clock Input	1	Data Shift Register and Control Logic Clock	Positive going edge advances data in shift register. ICM7232: Eleventh edge resets shift register and control logic. ICM7234: Tenth edge resets shift register and control logic.
DATA ACCEPTED Output	37	Handshake Output	Output LOW when correct number of bits entered into shift register; ICM7232 8, 9 or 10 bits ICM7234 9 bits

ALL DEVICES

TERMINAL	PIN NO.	DESCRIPTION	FUNCTION
Display Voltage V_{DISP}	2	Negative end of on-chip resistor string used to generate intermediate voltage levels for display. Shutdown Input.	Display voltage control. When open (or less than 1V from V^+) chip is shutdown; oscillator stops, all display pins to V^+.
Common Line Driver Outputs	3,4,5		Drive display commons, or rows.
Segment Line Driver Outputs	6-29 6-35	(On ICM7231/33) (On ICM7232/34)	Drive display segments, or columns.
V^+	40	Chip Positive Supply	
GND	36	Chip Ground	

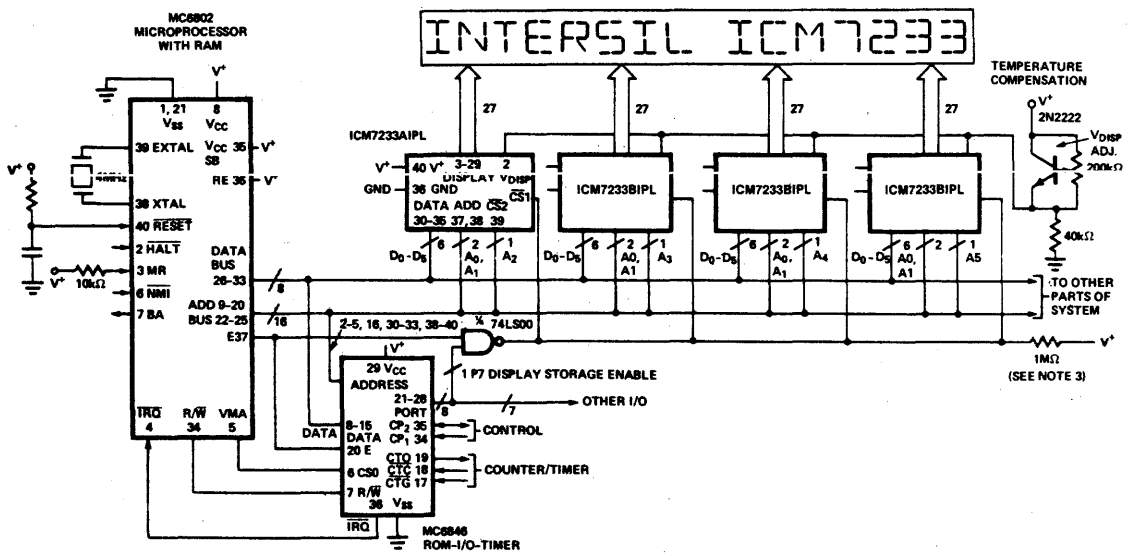

Figure 22. MC6802 Microprocessor with 16 Character 16 Segment ASCII Liquid Crystal Display. The peripheral device provides ROM and Timer functions in addition to port line control of the display bank. Individual character locations are addressed via the address bus. Note that VMA is not decoded on these lines, which could cause problems with the TST instruction.

© IC MASTER 1984

8 COUNTERS. 7 DIVIDERS. 5 DIGITAL LOCK CIRCUITS. 6 TOUCH-SENSITIVE LIGHT DIMMER/SWITCHES. 2 DISPLAY DRIVERS. 2 MOTOR SPEED CONTROLLERS. AND 1 POWERFUL BUT SIMPLE-MINDED MICROPROCESSOR.

INTEGRATED CONTROLLER-SEQUENCER

Microprocessor designed for applications requiring simple decision-making, not computation.
LS7270: Performs logical sequencing, timing, and controlling functions. Far more easily programmed than any other μP, and program can be stored in any standard ROM, PROM, EEPROM, or RAM. Low-cost, reliable replacement for hard-wired controls and relay networks.

DIGITAL LOCK CIRCUITS

For automotive/marine anti-theft.
LS7220: 14-pin DIP; 5,040 4-digit combinations; out-of-sequence detection logic; 25μA standby; "Save" mode for valet parking, settable in "Unlock"; built-in convenience delay.

For area access and machine access.
LS7225-LS7226: 14-pin DIP; 5,040 4-digit combinations, toggle output (set and reset with application of code); momentary output; tamper output.

For serial address decoding or 2-pushbutton keyless locks.
LS7228-LS7229: Address decoder/digital lock. 16-pin DIP. Code programmable through 9 parallel pins. Serial decoding input can be applied through dual pulse train or two pushbuttons. Pulse output. Duration between entries capacitor programmable. Cascadable.

MOTOR SPEED CONTROLLERS

LS7263: Crystal controlled 3-phase motor speed controller. For motor speed of 3600 rpm, accuracy of .01% achieved within 20 seconds.
LS7261: Brushless DC 3-phase commutator chip, featuring overcurrent sensing, brake, and reverse.

PROGRAMMABLE DIGITAL DELAY TIMER

For delaying the starting or stopping of an operation.
LS7210: Can generate delay, flashing, ms to infinity, or add auto reset to μP system, programmed by 5 binary weighted input bits plus on chip oscillator or external clock. Operable in 4 modes: delayed operate or release, dual delay, or one-shot.
Ion-implanted PMOS; all inputs CMOS, PMOS, & TTL compatible. 14-pin DIP.

TOUCH-SENSITIVE LIGHT DIMMER/SWITCHES.

For on/off switching, or varying brightness of incandescent lamps.
LS7231-7235: Momentary touch turns lamp off, if on; if off, momentary touch turns it to maximum or to brightness stored in memory (depending on circuit). Prolonged touch causes brightness to vary. Ion-implanted PMOS circuits. 8-pin DIP.

For step-switching of incandescent lamps.
LS7237: Tri-state input pin ("1", "0", or "open") selects sequence: on/off; mood/medium/high/off; night-light/mood/medium/high/off. Ion-implanted PMOS circuit. 8-pin DIP. PIN compatible with LS7231-5.

DISPLAY DRIVERS

For liquid crystal displays requiring up to 60V.
LS7100: BCD to 7 segment latch/decoder/driver.
LS7110: Binary addressable latched 8-channel demultiplexer/driver. Both are ion-implanted P Channel MOS circuits, compatible with CMOS and TTL systems. 16-pin DIPS.

CMOS DIVIDERS

For generating time bases from 50/60 Hz input. All feature: input shaping network; resettable; division select input 50/60 Hz; clock enable input; 8-pin mini-DIP — inputs arranged so that circuit cannot be damaged if plugged in backwards.
RED 5/6: 10 pulses/sec. RED 50/60: 1 pulse/sec. RED 3000/3600: 1 pulse/minute. RED 100/120: 1 pulse/2 seconds. RED 300/360: 1 pulse/0.1 minute.

For generating decade-related time bases.
RDD104XTL: 8-pin mini-DIP addressable divider divides by 10^1, 10^2, 10^3, 10^4. Input may be controlled by crystal or external frequency source.
RDD104RC: RC oscillator version of above.

LSI COMPUTER SYSTEMS INC. Since 1969
Manufacturers of Custom and Standard LSI circuits.
1235 Walt Whitman Rd., Melville, NY 11747
(516) 271-0400. TWX: 510 226-7833.

COUNTERS

DC to 5 MHz: LS7030: DC to 5 MHz eight decade MOS up counter with 8 decade latch and multiplexer. Multiplexed BCD and 7 segment outputs. Single power supply +4.75 to +15 VDC (full frequency range over full voltage range). Compatible with CMOS logic. Counter output latches. Leading zero blanking. 40-pin DIP.

5 MHz to 500 MHz: LS7031: DC to 5 MHz six decade MOS up counter with 8 decade latch and multiplexer. Multiplexed BCD outputs. Access to LSD latches allows attachment of prescalers for counting to 500 MHz. Leading zero blanking. Single power supply operation +4.75 to +15 VDC (full frequency range over full voltage range). Compatible with CMOS logic. 40-pin DIP.

For multi-comparison applications where parallel outputs are required.
LS7040: Dual 3 decade up/down counter with parallel BCD outputs. DC to 350 KHz count frequency at +5 volts. Fully synchronous operation. Inputs CMOS, TTL, and DTL compatible at +5V operation. Reset. Count enable. Power-on-reset. 40-pin DIP.
LS7240: 7-level comparator/multiplexer with parallel BCD inputs, for use with LS7040.

For counting applications requiring presignalling and recycling.
LS7055: DC to 250 KHz six decade up/down counter with integral preset, presignal, and main signal store. Automatic or manual preset/reset control. Three comparators with output flags. Multiplexed BCD and 7 segment outputs. Internal oscillator. Single power supply operation +5 to +15 volts. High noise immunity. All inputs CMOS compatible over entire power range. 40-pin DIP. (Successor to LS7050).

DC to 10 MHz: LS7060: DC to 10 MHz 32-bit MOS binary counter with 32-bit latch and multiplexer. 8-bit tri-state multiplexed outputs. Single power supply +4.75 to +5.25 VDC. **Bus compatible.** 18-pin DIP.
LS7062: Identical, except that it is a **dual 16-bit counter,** with two inputs.

DC to 2.56 GHz: LS7061: DC to 10 MHz 32-bit MOS up counter with 40-bit latch and multiplexer. 8-bit tri-state multiplexed outputs. Access to 8 LSB latches allows attachment of prescalers for counting to 2.56 GHz. Single power supply operation +4.75 to +5.25 VDC. **Bus compatible.** 24-pin DIP.

WORLD REPS:
ARGENTINA 46-2211, AUSTRALIA (03)598 5622, DENMARK 03-172417-172420, FRANCE 6085275, GERMANY & AUSTRIA 49-89 134093, HONG KONG 0-444241-6, ISRAEL 738701, ITALY 313364, JAPAN 264-3301, NORWAY (02)247285, SOUTH AFRICA 45-1421, SPAIN & PORTUGAL 449 59 00, SWEDEN & FINLAND 81 01 00, SWITZERLAND & LIECHTENSTEIN 01 730 2165-69, UK & NORTH IRELAND 01-207 1957.

EXPORT DEPT: Martin Essenburg, Mavex Technology Corp., 4667 Nesconset Hwy., Port Jefferson Station, NY 11776, USA Tel.: 516/473-2673. Cable: NOVEC

For our Custom capabilities, please see IC Master, CUSTOM SECTION, page 4761.

8-Bit Interface

Part Number		Function	Power	Polarity	Feature
Commercial	Military				
SN74LS241	SN54LS241	Buffer	LS	Non-invert	—
SN74LS244	SN54LS244				—
SN74LS341	SN54LS341				Schmitt Trigger
SN74LS344	SN54LS344				Schmitt Trigger
SN74LS210	SN54LS210			Invert	—
SN74LS240	SN54LS240				—
SN74LS310	SN54LS310				Schmitt Trigger
SN74LS340	SN54LS340				Schmitt Trigger
SN74S241	SN54S241		S	Non-invert	—
SN74S244	SN54S244				—
SN74S731	SN54S731				MOS Driver
SN74S734	SN54S734				MOS Driver
SN74S210	SN54S210			Invert	—
SN74S240	SN54S240				—
SN74S700	SN54S700				MOS Driver
SN74S730	SN54S730				MOS Driver
SN74LS245	SN54LS245	Transceiver	LS	Non-invert	—
SN74LS645	SN54LS645				—
SN74LS645-1	—				48mA I_{OL}
SN74LS373	SN54LS373	Latch	LS	Non-invert	—
SN74LS533	SN54LS533			Invert	—
SN74S373	SN54S373		S	Non-invert	—
SN74S531	—				32mA I_{OL}
SN74S533	SN54S533			Invert	—
SN74S535	—				32mA I_{OL}
SN74LS273	SN54LS273	Register	LS	Non-invert	Master Reset
SN74LS374	SN54LS374				—
SN74LS377	SN54LS377				Clock Enable
SN74LS534	SN54LS534			Invert	—
SN74S273	SN54S273		S	Non-invert	Master Reset
SN74S374	SN54S374				—
SN74S377	SN54S377				Clock Enable
SN74S383	SN54S383				Open Collector
SN74S532	—				32mA I_{OL}
SN74S534	SN54S534			Invert	—
SN74S536	—				32mA I_{OL}

© IC MASTER 1984

First-In First-Out (FIFO) 64x4 64x5 Cascadable Memory

C5/67401 C5/67401A C67401B C5/67402 C5/67402A C67402B

Features/Benefits

- Choice of 16.7, 15, and 10 MHz shift out/shift in rates
- Choice of 4 bit or 5 bit data width
- TTL inputs and outputs
- Readily expandable in the word and bit dimensions
- Structured pinouts. Output pins directly opposite corresponding input pins
- Asynchronous operation
- Pin compatible with Fairchild's F3341 MOS FIFO and many times as fast

Description

The C5/C67401B/2B/1A/2A/1/2 are "fall-through" high speed First-In First-Out (FIFO) memory organized 64 words by 4 bits and 64 words by 5 bits respectively. A 16.7 MHz data rate allows usage in digital video systems; a 15 MHz data rate allows usage in high speed tape or disc controllers and communications buffer applications. Both word length and FIFO depth are expandable.

Ordering Information

PART NUMBER	PKG	TEMP	DESCRIPTION
C57401	J, F, L,* N	MIL	7 MHz 64x4 FIFO
C67401	J, N	COM	10 MHz 64x4 FIFO
C57402	J, F, L,* N	MIL	7 MHz 64x5 FIFO
C67402	J, N	COM	10 MHz 64x5 FIFO
C57401A	J, F, L,*	MIL	10 MHz 64x4 FIFO
C67401A	J	COM	15 MHz 64x4 FIFO
C57402A	J, F, L,*	MIL	10 MHz 64x5 FIFO
C67402A	J	COM	15 MHz 64x5 FIFO
C67401B	J	COM	16.7 MHz 64x4 FIFO
C67402B	J	COM	16.7 MHz 64x5 FIFO

* LCC — contact the factory

Block Diagrams

C57401/A 64x4
C67401A/B 64x4

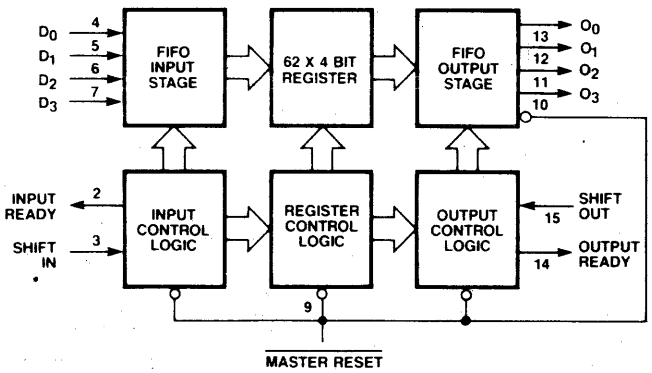

C57402/A 64x5
C67402A/B 64x5

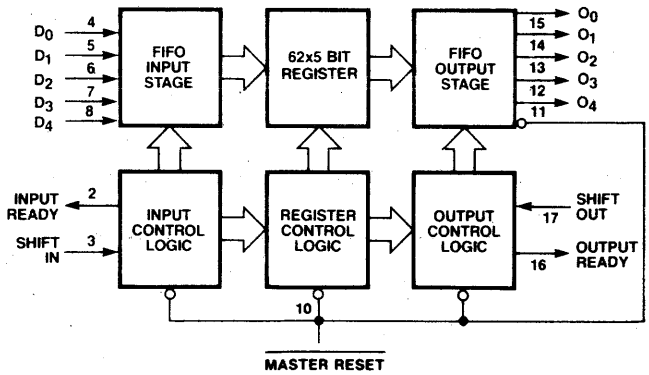

Pin Configurations

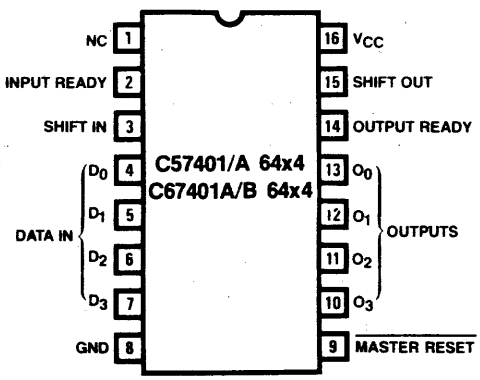

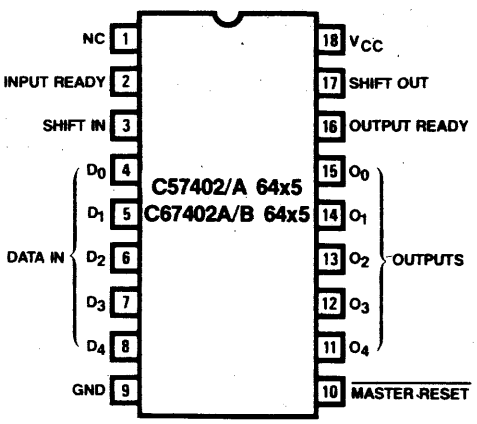

2175 Mission College Boulevard, Santa Clara, CA 95050 Tel: (408) 970-9700 TWX: 910-338-2376 TWX: 910-338-2374
Monolithic Memories

© IC MASTER 1984

Absolute Maximum Ratings

Supply voltage V_{CC} ..... —.5V to 7V
Input voltage ..... —1.5V to 7V
Off-state output voltage ..... —.5V to 5.5V
Storage temperature ..... −65° to +150°C

Operating Conditions C67401B/2B

SYMBOL	PARAMETER	FIGURE	COMMERCIAL MIN	TYP	MAX	UNIT
V_{CC}	Supply voltage		4.75	5	5.25	V
T_A	Operating free-air temperature		0		75	°C
t_{SIH}†	Shift in HIGH time	1	18			ns
t_{SIL}	Shift in LOW time	1	18			ns
t_{IDS}	Input data set up	1	0			ns
t_{IDH}	Input data hold time	1	45			ns
t_{SOH}†	Shift Out HIGH time	5	18			ns
t_{SOL}	Shift Out LOW time	5	18			ns
t_{MRW}	Master Reset pulse	10	35			ns
t_{MRS}	Master Reset to SI	10	35			ns

* Case temperature.

Switching Characteristics C67401B/2B

Over Operating Conditions

SYMBOL	PARAMETER	FIGURE	COMMERCIAL MIN	TYP	MAX	UNIT
f_{IN}	Shift in rate	1	16.7			MHz
t_{IRL}	Shift In to Input Ready LOW	1			35	ns
t_{IRH}†	Shift In to Input Ready HIGH	1			37	ns
f_{OUT}	Shift Out rate	5	16.7			MHz
t_{ORL}†	Shift Out to Output Ready LOW	5			38	ns
t_{ORH}†	Shift Out to Output Ready HIGH	5			44	ns
t_{ODH}	Output Data Hold (previous word)	5	5			ns
t_{ODS}	Output Data Shift (next word)	5			44	ns
t_{PT}	Data throughput or "fall through"	4, 8			1.3	μs
t_{MRORL}	Master Reset to OR LOW	10			55	ns
t_{MRIRH}	Master Reset to IR HIGH	10			55	ns
t_{IPH}*	Input Ready pulse HIGH	4	20			ns
t_{OPH}*	Output Ready pulse HIGH	8	20			ns

† See AC test and High Speed application note.
*This parameter applies to FIFOs communicating with each other in a cascaded mode.

2175 Mission College Boulevard, Santa Clara, CA 95050 Tel: (408) 970-9700 TWX: 910-338-2376 TWX: 910-338-2374
Monolithic Memories

© IC MASTER 1984

Absolute Maximum Ratings

Supply voltage V_{CC} ..... —.5V to 7V
Input voltage ..... —1.5V to 7V
Off-state output voltage ..... —.5V to 5.5V
Storage temperature ..... −65° to +150°C

Operating Conditions C5/C67401A/2A

SYMBOL	PARAMETER	FIGURE	MILITARY A			COMMERCIAL A			UNIT
			MIN	TYP	MAX	MIN	TYP	MAX	
V_{CC}	Supply voltage		4.5	5	5.5	4.75	5	5.25	V
T_A	Operating free-air temperature		−55		*125	0		75	°C
t_{SIH}†	Shift in HIGH time	1	35			23			ns
t_{SIL}	Shift in LOW time	1	35			25			ns
t_{IDS}	Input data set up	1	0			0			ns
t_{IDH}	Input data hold time	1	45			40			ns
t_{SOH}†	Shift Out HIGH time	5	35			23			ns
t_{SOL}	Shift Out LOW time	5	35			25			ns
t_{MRW}	Master Reset pulse	10	40			35			ns
t_{MRS}	Master Reset to SI	10	45			35			ns

*Case temperature.

Switching Characteristics C5/C67401A/2A

Over Operating Conditions

SYMBOL	PARAMETER	FIGURE	MILITARY A			COMMERCIAL A			UNIT
			MIN	TYP	MAX	MIN	TYP	MAX	
f_{IN}	Shift in rate	1	10			15			MHz
t_{IRL}†	Shift In to Input Ready LOW	1			50			40	ns
t_{IRH}†	Shift In to Input Ready HIGH	1			50			40	ns
f_{OUT}	Shift Out rate	5	10			15			MHz
t_{ORL}†	Shift Out to Output Ready LOW	5			65			45	ns
t_{ORH}†	Shift Out to Output Ready HIGH	5			65			50	ns
t_{ODH}	Output Data Hold (previous word)	5	10			10			ns
t_{ODS}	Output Data Shift (next word)	5			60			45	ns
t_{PT}	Data throughput or "fall through"	4, 8			2.2			1.6	μs
t_{MRORL}	Master Reset to OR LOW	10			65			60	ns
t_{MRIRH}	Master Reset to IR HIGH	10			65			60	ns
t_{IPH}*	Input Ready pulse HIGH	4	30			30			ns
t_{OPH}*	Output Ready pulse HIGH	8	30			30			ns

† See AC test and High Speed application note.
* This parameter applies to FIFOs communicating with each other in a cascaded mode.

© IC MASTER 1984

Absolute Maximum Ratings

Supply voltage V_{CC} ..... —.5V to 7V
Input voltage ..... —1.5V to 7V
Off-state output voltage ..... —.5V to 5.5V
Storage temperature ..... −65° to +150°C

Operating Conditions C5/C67401/2

SYMBOL	PARAMETER	FIGURE	MILITARY MIN	MILITARY TYP	MILITARY MAX	COMMERCIAL MIN	COMMERCIAL TYP	COMMERCIAL MAX	UNIT
V_{CC}	Supply voltage		4.5	5	5.5	4.75	5	5.25	V
T_A	Operating free-air temperature		−55		*125	0		75	°C
t_{SIH}†	Shift in HIGH time	1	45			35			ns
t_{SIL}	Shift in LOW time	1	45			35			ns
t_{IDS}	Input data set up	1	0			0			ns
t_{IDH}	Input data hold time	1	55			45			ns
t_{SOH}†	Shift Out HIGH time	5	45			35			ns
t_{SOL}	Shift Out LOW time	5	45			35			ns
t_{MRW}	Master Reset pulse	10	30			35			ns
t_{MRS}	Master Reset to SI	10	45			35			ns

*Case temperature.

Switching Characteristics C5/C67401/2

Over Operating Conditions

SYMBOL	PARAMETER	FIGURE	MILITARY MIN	MILITARY TYP	MILITARY MAX	COMMERCIAL MIN	COMMERCIAL TYP	COMMERCIAL MAX	UNIT
f_{IN}	Shift in rate	1	7			10			MHz
t_{IRL}†	Shift In to Input Ready LOW	1			60			45	ns
t_{IRH}†	Shift In to Input Ready HIGH	1			60			45	ns
f_{OUT}	Shift Out rate	5	7			10			MHz
t_{ORL}†	Shift Out to Output Ready LOW	5			65			55	ns
t_{ORH}†	Shift Out to Output Ready HIGH	5			70			60	ns
t_{ODH}	Output Data Hold (previous word)	5	10			10			ns
t_{ODS}	Output Data Shift (next word)	5			65			55	ns
t_{PT}	Data throughput or "fall through"	4, 8			4			3	μs
t_{MRORL}	Master Reset to OR LOW	10			65			60	ns
t_{MRIRH}	Master Reset to IR HIGH	10			65			60	ns
t_{IPH}*	Input Ready pulse HIGH	4	30			30			ns
t_{OPH}*	Output Ready pulse HIGH	8	30			30			ns

† See AC test and High Speed application note.
*This parameter applies to FIFOs communicating with each other in a cascaded mode.

Standard Test Load

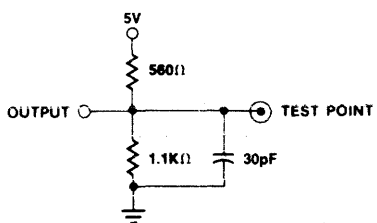

Input Pulse 0 to 3V
Input Rise and Fall Time (10% - 90%)
2 - 5 ns.
Measurements made at 1.5 V

2175 Mission College Boulevard, Santa Clara, CA 95050 Tel: (408) 970-9700 TWX: 910-338-2376 TWX: 910-338-2374
Monolithic Memories

© IC MASTER 1984

Electrical Characteristics Over Operating Conditions

SYMBOL	PARAMETER		TEST CONDITIONS		MIN	TYP	MAX	UNIT
V_{IL}	Low-level input voltage						0.8†	V
V_{IH}	High-level input voltage				2†			V
V_{IC}	Input clamp voltage		V_{CC} = MIN	I_I = −18mA			−1.5	V
I_{IL1}	Low-level input current	D_0–D_4, $\overline{MR}$	V_{CC} = MAX	V_I = 0.45V			−0.8	mA
I_{IL2}		SI, SO					−1.6	mA
I_{IH}	High-level input current		V_{CC} = MAX	V_I = 2.4V			50	μA
I_I	Maximum input current		VCC = MAX	V_I = 5.5V			1	mA
V_{OL}	Low-level output voltage		V_{CC} = MIN	I_{OL} = 8mA			0.5	V
V_{OH}	High-level output voltage		V_{CC} = MIN	I_{OH} = −0.9mA	2.4			V
I_{OS}	Output short-circuit current *		V_{CC} = MAX	V_0 = 0V	−20		−90	mA
I_{CC}	Supply current		V_{CC} = MAX Inputs low, outputs open	C5/67401			160	mA
				C5/67402			180	
				C5/67401A			170	
				C5/67402A			190	
				C67401B			180	
				C67402B			200	

*Not more than one output should be shorted at a time and duration of the short-circuit should not exceed one second.
†There are absolute voltage with respect to device GND (Pin 8 or 9) and includes all overshoots due to test equipment

Functional Description

Data Input

After power up the Master Reset is pulsed low (Fig. 10) to prepare the FIFO to accept data in the first location. When Input Ready (IR) is HIGH the location is ready to accept data from the D_X inputs. Data then present at the data inputs is entered into the first location when the Shift In (SI) is brought HIGH. A SI HIGH signal causes the IR to go LOW. Data remains at the first location until SI is brought LOW. When SI is brought LOW and the FIFO is not full, IR will go HIGH, indicating that more room is available. Simultaneously, data will propagate to the second location and continue shifting until it reaches the output stage or a full location. If the memory is full, IR will remain LOW.

Data Transfer

Once data is entered into the second cell, the transfer of any full cell to the adjacent (downstream) empty cell is automatic, activated by an on-chip control. Thus data will stack up at the end of the device while empty locations will "bubble" to the front. t_{PT} defines the time required for the first data to travel from input to the output of a previously empty device.

Data Output

Data is read from the O_X outputs. When data is shifted to the output stage, Output Ready (OR) goes HIGH, indicating the presence of valid data. When the OR is HIGH, data may be shifted out by bringing the Shift Out (SO) HIGH. A HIGH signal at SO causes the OR to go LOW. Valid data is maintained while the SO is HIGH. When SO is brought LOW the upstream data, provided that stage has valid data, is shifted to the output stage. When new valid data is shifted to the output stage, OR goes HIGH. If the FIFO is emptied, OR stays LOW, and O_X remains as before, (i.e. data does not change if FIFO is empty).
Input Ready and Output Ready may also be used as status signals indicating that the FIFO is completely full (Input Ready stays LOW for at least t_{PT}) or completely empty (Output Ready stays LOW for at least t_{PT}).

AC Test and High Speed App.Notes

Since the FIFO ia a very high speed device, care must be exercised in the design of the hardware and the timing utilized within the design. The internal shift rate of the FIFO typically exceeds 20MHz in operation. Device grounding and decoupling is crucial to correct operation as the FIFO will respond to very small glitches due to long reflective lines, high capacitances and/or poor supply decoupling and grounding. MMI recommends a monolithic ceramic capacitor of 0.1μF directly between V_{CC} and GND with very short lead length. In addition, care must be exercised in how the timing is set up and how the parameters are measured. For example, since an AND gate function is associated with both the Shift In-Input Ready combination, as well as the Shift Out-Output Ready combination, timing measurements may be misleading, i.e., rising edge of the Shift In pulse is not recognized until Input Ready is High. If Input Ready is not high due to (a) too high a frequency, (b) too wide a Shift In pulse at that frequency, or (c) FIFO being full or effected by Master Reset, the Shift In activity will be ignored. This will affect the device from a functional standpoint, and will also cause the "effective" timing of Input Data Hold Time (TIDH) and the next activity of Input Ready (TIRL) to be extended relative to Shift ingoing High. This same type of problem is also related to TIRH, TORL and TORH as related to Shift Out.

8x8 Multiplier/Divider
SN54/74S508

Features/Benefits

- Co-processor for enhancing the arithmetic speed of all present 8-bit microprocessors
- Bus-oriented organization
- 24-pin package
- 8/8 or 16/8 division in less than 2.2 μsec
- 8x8 multiplication in less than .8 μsec
- 28 different multiplication instructions such as "fractional multiply and accumulate"
- 13 different divide instructions
- Self-contained and microprogrammable

Description

The SN54/74S508 ('S508) is a bus-organized 8x8 Multiplier/Divider. The device provides both multiplication and division of 2s-complement 8-bit numbers at high speed. There are 28 different multiply options, including: positive and negative multiply, positive and negative accumulation, multiplication by a constant, and both single-length and double-length addition in conjunction with multiplication. 13 different divide options allow single-length or double-length division, division of a previously-generated result, division by a constant, and continued division of a remainder or quotient.

The 'S508 is a time-sequenced device requiring a single clock. It loads operands from, and presents results to, a bidirectional 8-bit bus. Loading of the operands, reading of the results, and sequential control of the device is performed by a 3-bit instruction field.

The 'S508 has the additional feature that operands and results can be either integers or fractions; when it deals with fractions, automatic scaling occurs. Results can be rounded if required, and an Overflow output indicates whenever a result is outside the normally-accepted number range.

For a simple multiplication of two operands and reading of the double-length result, the device takes five clock periods — one for initialization, and four for the actual multiplication. A typical clock period is 125 ns, which gives a multiplication time of 500 ns typical for 8x8 multiplication, plus 125 ns additionally for initialization, or 625 ns in all. More complex multiplications will take additional clock periods for loading the additional oper-; ands. A simple division operation requires 8 + 4 = 12 clock periods for a typical time of 1.5 μs (16 bits/8 bits), also plus 125 ns for initialization, or 1.625 μs in all.

Ordering Information

PART NUMBER	PACKAGE	TEMPERATURE
SN54S508	D24	Military
SN74S508	D24	Commercial

Logic Symbol

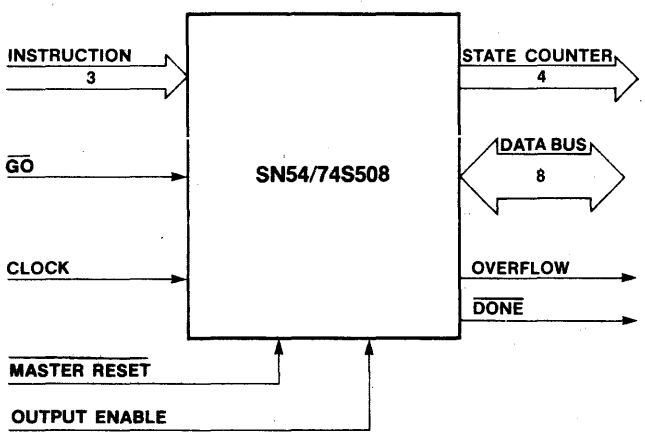

Pin Configuration

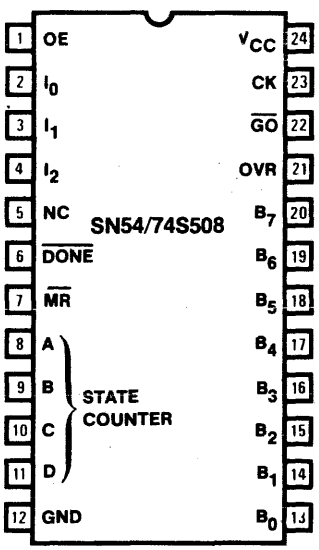

2175 Mission College Boulevard, Santa Clara, CA 95050 Tel: (408) 970-9700 TWX: 910-338-2376 TWX: 910-338-2374
Monolithic Memories

© IC MASTER 1984

INSTRUCTION SEQUENCE				OPERATION	CLOCK CYCLES
ARITHMETIC OPERATIONS					
			0	X1 · Y	5
			1	-X1 · Y	5
			2	X1 · Y + K_Z, K_W	5
			3	-X1 · Y + K_Z, K_W	5
			4	K_Z, K_W/X1	13
		5/6	0	X · Y	6
		5/6	1	-X · Y	6
		5/6	2	X · Y + K_Z, K_W	6
		5/6	3	-X · Y + K_Z, K_W	6
		5/6	4	K_W/X	14
		5/6	5	K_Z/X	14
	5/6	6	0	X · Y + Z	7
	5/6	6	1	-X · Y + Z	7
	5/6	6	2	X · Y + $K_Z \cdot 2^{-8}$	7
	5/6	6	3	-X · Y + $K_Z \cdot 2^{-8}$	7
	5/6	6	4	Z, W/X	15
	5/6	6	5	Z/X	15
5/6	6	6	0	X · Y + Z, W	8
5/6	6	6	1	-X · Y + Z, W	8
5/6	6	6	2	X · Y + W_{sign}	8
5/6	6	6	3	-X · Y + W_{sign}	8
5/6	6	6	4	W/X	16
5/6	6	6	5	W_{sign}/X	16
5/6	6	6	6	(See Note 9 below)	—
5/6	5/6	6	7	Load X, Load Z, Load W, Clear Z	3
READING OPERATIONS					
			7	Read Z	1
		7	7	Read Z, W	2
	7	7	7	Read Z, W, Z	3
7	7	7	7	Read Z, W, Z, W	4
		5	7	Round, then Read Z	2
	5	7	7	Round, then Read Z, W	3

NOTES:
1. X,Y are input multiplier and multiplicand.
2. X1 is the previous contents of the first rank of the X register, (either the old X or a new X).
3. Fractional or integer arithmetic is specified by having the next-to-the-last operand loaded using a 5 or 6 instruction respectively. All rows beginning with "5/6" in effect represent *two* instructions. 5 does fractional arithmetic and 6 does integer arithmetic.
4. Z, W is a double-precision number. Z is the most significant half. Z, W represents addend upon input, and product (or accumulated sum) after multiplication.
5. K_Z, K_W represents previous accumulator contents. K_Z is the most-significant half.
6. W_{sign} is a single-length signed number, with sign extension.
7. Maximum clock cycle = 167 ns for a 6-MHz clock.
8. If n instruction codes are shown at the left under "instruction sequences," the number of clock cycles at the right is n+4 for multiplication and n+12 for division.
9. The code "5/6 6 6 6" represents an incomplete operation since it leaves the 'S508 in state 1 rather than in state 0, 8, or 10

Figure 1 'S508 Instruction Set (Partial List)

SUMMARY OF SIGNALS/PINS	
B_7-B_0	Bidirectional data bus inputs/outputs
I_2-I_0	Instruction (sequential control) input
A, B, C, D	Internal-state-counter outputs
CK	Clock pulse input
$\overline{GO}$	Chip activation input
OE	Output enable input
$\overline{MR}$	Master reset input
OVR	Arithmetic overflow output
$\overline{DONE}$	Arithmetic-operation completion output

Description (continued)

The 'S508 device uses standard low-power Schottky technology, requires a single +5V power supply, and is fully TTL compatible. Bus inputs require at most 250 μA input current, and control and clock inputs require at most 1 mA input current. Bus outputs are three-state, and are capable of sinking 8 mA at the low logic level. The 'S508 is available in both commercial-temperature and military-temperature ranges, in a 600-mil 24-pin dual-in-line ceramic package.

Device Operation

The 'S508 contains four 8-bit working registers. Y is the multiplier register; X is the multiplicand and divisor register; W is the least-significant half of a double-length accumulator, and holds the least-significant half of the product after a multiplication operation, or the remainder after a division operation; and Z is the most-significant half of this same accumulator. In addition to these registers, there is a high-speed arithmetic unit which performs addition, subtraction, and shifting steps in order to accomplish the various arithmetic operations; a loading sequencer; and a PLA control network.

Operands are loaded into the working registers in time sequence at each clock period, under the control of this sequencer. The chip-activation signal $\overline{GO}$ must be LOW in order to begin the loading process and continue to the next step in the loading operation. If $\overline{GO}$ is continually held HIGH, the 'S508 remains in a wait state with its outputs held in their high-impedance states, so that the other devices attached to the bus may drive it. In this condition, the 'S508 does not respond to any codes on its instruction inputs; in effect, it does not "wake up" until $\overline{GO}$ goes LOW. Also, $\overline{GO}$ may change only when the clock input CK is HIGH. After all of the operands are loaded, the 'S508 jumps to the multiply routine, or to the divide routine, and performs the required operations as indicated in Figure 1. After 5 clock periods for a simple multiply or 13 clock periods for a simple divide, for example, the device is ready to place the result on the bus in time sequence.

Absolute Maximum Ratings

Supply Voltage, V_{CC} 7V
Input Voltage 7V
Off-state output voltage 5.5V
Storage temperature ..... –65° to +150°C

Operating Conditions

SYMBOL	PARAMETER	FIGURE	MILITARY MIN	MILITARY TYP	MILITARY MAX	COMMERCIAL MIN	COMMERCIAL TYP	COMMERCIAL MAX	UNIT
V_{CC}	Supply voltage		4.5	5	5.5	4.75	5	5.25	V
T_A	Operating free-air temperature		–55		125†	0		75	°C
f_{MAX}	Clock frequency	8	5			6			MHz
t_{CWP}	Positive clock pulse width	8	90			70			ns
t_{CWN}	Negative clock pulse width	8	60			50			ns
t_{BS}	Bus setup time for inputting data *	8	60			50			ns
t_{BH}	Bus hold time for inputting data *	8	45			35			ns
t_{INSS}	Instruction, $\overline{GO}$ setup time	8	10			10			ns
t_{INSH}	Instruction, $\overline{GO}$ hold time	8	20			20			ns

* During operations when the bus is being used to input data.
† Case temperature.

Electrical Characteristics Over Operating Conditions

SYMBOL	PARAMETER	TEST CONDITIONS		MIN	TYP	MAX	UNIT
V_{IL}	Low-level input voltage					0.8	V
V_{IH}	High-level input voltage			2			V
V_{IC}	Input clamp voltage	V_{CC} = MIN I_I = –18mA				–1.5	V
I_{IL}	Low-level input current	V_{CC} = MAX V_I = 0.5V	B_7-B_0			–250	μA
			All other inputs			–1	mA
I_{IH}	High-level input current	V_{CC} = MAX V_I = 2.4V				250	μA
I_I	Maximum input current	V_{CC} = MAX V_I = 5.5V				1	mA
V_{OL}	Low-level output voltage	V_{CC} = MIN I_{OL} = 8mA			0.3	0.5	V
V_{OH}	High-level output voltage	V_{CC} = MIN I_{OH} = –2mA		2.4			V
I_{OS}	Output short-circuit current*	V_{CC} = MAX V_O = 0V		–10		–90	mA
I_{CC}	Supply current	V_{CC} = MAX	SN54S508		300	400	mA
			SN74S508		300	380	

* Not more than one output should be shorted at a time, and the duration of the short-circuit should not exceed one second.

Switching Characteristics
Over Operating Conditions

SYMBOL	PARAMETER		FIGURE	MILITARY MIN	MILITARY TYP	MILITARY MAX	COMMERCIAL MIN	COMMERCIAL TYP	COMMERCIAL MAX	UNIT
t_{BO}	Bus output delay for outputting data*		8		70	120		70	95	ns
t_{PXZ}	Output disable delay	From I_2-I_0 to bus			40	70		40	65	ns
		From OE, $\overline{GO}$ to bus			20	50		20	40	
t_{PZX}	Output enable delay	From I_2-I_0 to bus			45	90		45	80	ns
		From OE, $\overline{GO}$ to bus			25	55		25	45	
t_{OVR}	Overflow output delay from CK		8		70	120		70	95	ns
t_{DN}	$\overline{Done}$ output delay		8		30	90		30	70	ns

* During operations when the bus is being used to output data

2175 Mission College Boulevard, Santa Clara, CA 95050 Tel: (408) 970-9700 TWX: 910-338-2376 TWX: 910-338-2374
Monolithic Memories MMI

© IC MASTER 1984

16x16 Multiplier/Divider
SN54/74S516

Features/Benefits

- **Co-processor for enhancing the arithmetic speed of all present 16-bit and 8-bit microprocessors**
- **Bus-oriented organization**
- **24-pin package**
- **16/16 or 32/16 division in less than 3.5 μsec**
- **16x16 multiplication in less than 1.5 μsec**
- **28 different multiplication instructions such as "fractional multiply and accumulate"**
- **13 different divide instructions**
- **Self-contained and microprogrammable**

Description

The SN54/74S516 ('S516) is a bus-organized 16x16 Multiplier/Divider. The device provides both multiplication and division of 2s-complement 16-bit numbers at high speed. There are 28 different multiply options, including: positive and negative multiply, positive and negative accumulation, multiplication by a constant, and both single-length and double-length addition in conjunction with multiplication. 13 different divide options allow single-length or double-length division, division of a previously-generated result, division by a constant, and continued division of a remainder or quotient.

The 'S516 is a time-sequenced device requiring a single clock. It loads operands from, and presents results to, a bidirectional 16-bit bus. Loading of the operands, reading of the results, and sequential control of the device is performed by a 3-bit instruction field.

The 'S516 has the additional feature that operands and results can be either integers or fractions; when it deals with fractions, automatic scaling occurs. Results can be rounded if required, and an Overflow output indicates whenever a result is outside the normally-accepted number range.

For a simple multiplication of two operands the device takes nine clock periods — one for initialization, and eight for the actual multiplication. A realistic clock period is 167 ns, which gives a multiplication time of 1333 ns typical for 16x16 multiplication, plus 167 ns additionally for initialization, or 1500 ns in all. More complex multiplications will take additional clock periods for loading the additional operands. A simple division operation requires 16 + 4 = 20 clock periods for a typical time of 3.333 ns (32 bits/16 bits), also plus 167 ns for initialization, or 3500 ns in all.

Ordering Information

PART NUMBER	PACKAGE	TEMPERATURE
SN54S516	T24	Military
SN74S516	T24	Commercial

Logic Symbol

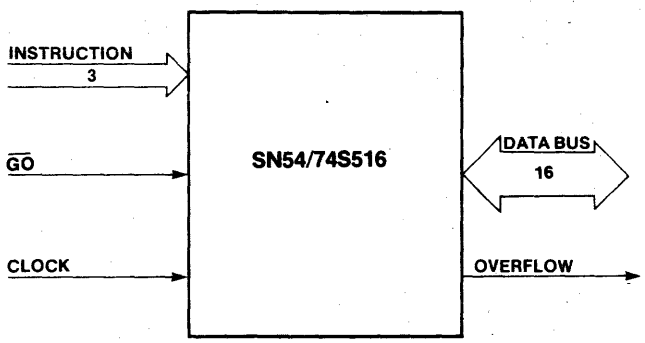

Pin Configuration

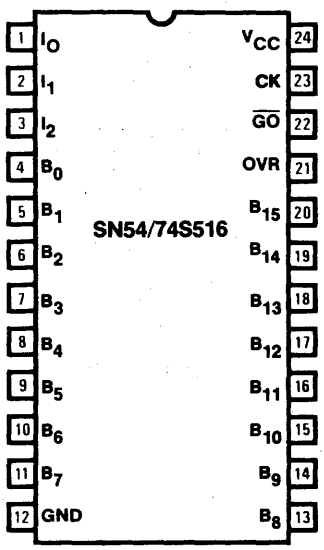

DIGITAL

Monolithic Memories

2175 Mission College Boulevard, Santa Clara, CA 95050 Tel: (408) 970-9700 TWX: 910-338-2376 TWX: 910-338-2374

Monolithic Memories

© IC MASTER 1984

INSTRUCTION SEQUENCE				OPERATION	CLOCK CYCLES
ARITHMETIC OPERATIONS					
			0	X1 · Y	9
			1	-X1 · Y	9
			2	X1 · Y + K_Z, K_W	9
			3	-X1 · Y + K_Z, K_W	9
			4	K_Z, K_W/X1	21
		5/6	0	X · Y	10
		5/6	1	-X · Y	10
		5/6	2	X · Y + K_Z, K_W	10
		5/6	3	-X · Y + K_Z, K_W	10
		5/6	4	K_W/X	22
		5/6	5	K_Z/X	22
	5/6	6	0	X · Y + Z	11
	5/6	6	1	-X · Y + Z	11
	5/6	6	2	X · Y + $K_Z \cdot 2^{-16}$	11
	5/6	6	3	-X · Y + $K_Z \cdot 2^{-16}$	11
	5/6	6	4	Z, W/X	23
	5/6	6	5	Z/X	23
5/6	6	6	0	X · Y + Z, W	12
5/6	6	6	1	-X · Y + Z, W	12
5/6	6	6	2	X · Y + W_{sign}	12
5/6	6	6	3	-X · Y + W_{sign}	12
5/6	6	6	4	W/X	24
5/6	6	6	5	W_{sign}/X	24
5/6	6	6	6	(See Note 9 below.)	—
5/6	6	6	7	Load X, Load Z, Load W, Clear Z	4
	5/6	6	7	Load X, Load Z, Read Z	3
READING OPERATIONS					
			7	Read Z	1
		7	7	Read Z, W	2
	7	7	7	Read Z, W, Z	3
7	7	7	7	Read Z, W, Z, W	4
		5	7	Round, then Read Z	2
	5	7	7	Round, then Read Z, W	3

NOTES:
1. X,Y are input multiplier and multiplicand.
2. X1 is the previous contents of the first rank of the X register (either the old X or a new X).
3. Fractional or integer arithmetic is specified by having the next-to-the-last operand loaded using a 5 or 6 instruction respectively. All rows beginning with "5/6" in effect represent *two* instructions. 5 does fractional arithmetic and 6 does integer arithmetic.
4. Z, W is a double-precision number. Z is the most significant half, Z, W represents addend upon input, and product (or accumulated sum) after multiplication.
5. K_Z, K_W represents previous accumulator contents. K_Z is the most-significant half.
6. W_{sign} is a single-length signed number, with sign extension.
7. Maximum clock cycle = 167 ns for an 6-MHz clock.
8. If n instruction codes are shown at the left under "instruction sequences," the number of clock cycles at the right is n+8 for multiplication and n+20 for division.
9. The code "5/6 6 6 6" represents an incomplete operation since it leaves the 'S516 in state 1 rather than in state 0, 8, or 10.

Figure 1 'S516 Instruction Set (Partial List)

SUMMARY OF SIGNALS/PINS	
B_{15}-B_0	Bidirectional data bus inputs/outputs
I_2-I_0	Instruction (sequential control) input
CK	Clock pulse input
$\overline{GO}$	Chip activation input
OVR	Arithmetic overflow output

Description (continued)

The 'S516 device uses standard low-power Schottky technology, requires a single +5V power supply, and is fully TTL compatible. Bus inputs require at most 250 μA input current, and control and clock inputs require at most 1 mA input current. Bus outputs are three-state, and are capable of sinking 8 mA at the low logic level. The 'S516 is available in both commercial-temperature and military-temperature ranges, in a 600-mil 24-pin dual-in-line ceramic package.

Device Operation

The 'S516 contains four 16-bit working registers. Y is the multiplier register; X is the multiplicand and divisor register; W is the least-significant half of a double-length accumulator, and holds the least-significant half of the product after a multiplication operation, or the remainder after a division operation; and Z is the most-significant half of this same accumulator. In addition to these registers, there is a high-speed arithmetic unit which performs addition, subtraction, and shifting steps in order to accomplish the various arithmetic operations; a loading sequencer; and a PLA control network.

Operands are loaded into the working registers in time sequence at each clock period, under the control of this sequencer. The chip-activation signal $\overline{GO}$ must be LOW in order to begin the loading process and continue to the next step in the loading operation. If $\overline{GO}$ is continually held HIGH, the 'S516 remains in a wait state with its outputs held in their high-impedance states, so that the other devices attached to the bus may drive it. In this condition, the 'S516 does not respond to any codes on its instruction inputs; in effect, it does not "wake up" until $\overline{GO}$ goes LOW. Also, $\overline{GO}$ may change only when the clock input CK is HIGH. After all of the operands are loaded, the 'S516 jumps to the multiply routine, or to the divide routine, and performs the required operations as indicated in Figure 1. After 9 clock periods for a simple multiply or 21 clock periods for a simple divide, for example, the result is placed on the bus in time sequence.

© IC MASTER 1984

Absolute Maximum Ratings

Supply Voltage, V_{CC} 7V
Input Voltage 7V
Off-state output voltage 5.5V
Storage temperature ..... −65° to +150°C

Operating Conditions

SYMBOL	PARAMETER	FIGURE	MILITARY MIN	MILITARY TYP	MILITARY MAX	COMMERCIAL MIN	COMMERCIAL TYP	COMMERCIAL MAX	UNIT
V_{CC}	Supply voltage		4.5	5	5.5	4.75	5	5.25	V
T_A	Operating free-air temperature		−55		125†	0		75	°C
f_{MAX}	Clock frequency	8	5			6			MHz
t_{CWP}	Positive clock pulse width	8	90			70			ns
t_{CWN}	Negative clock pulse width	8	60			50			ns
t_{BS}	Bus setup time for inputting data *	8	60			50			ns
t_{BH}	Bus hold time for inputting data *	8	45			35			ns
t_{INSS}	Instruction, $\overline{GO}$ setup time	8	10			10			ns
t_{INSH}	Instruction, $\overline{GO}$ hold time	8	30			30			ns

* During operations when the bus is being used to input data. † Case temperature.

Electrical Characteristics Over Operating Conditions

SYMBOL	PARAMETER	TEST CONDITIONS		MIN	TYP	MAX	UNIT
V_{IL}	Low-level input voltage					0.8	V
V_{IH}	High-level input voltage			2			V
V_{IC}	Input clamp voltage	V_{CC} = MIN I_I = −18mA				−1.5	V
I_{IL}	Low-level input current	V_{CC} = MAX V_I = 0.5V	B_{15}-B_0			−250	μA
			All other inputs			−1	mA
I_{IH}	High-level input current	V_{CC} = MAX V_I = 2.4V				250	μA
I_I	Maximum input current	V_{CC} = MAX V_I = 5.5V				1	mA
V_{OL}	Low-level output voltage	V_{CC} = MIN I_{OL} = 8mA			0.3	0.5	V
V_{OH}	High-level output voltage	V_{CC} = MIN I_{OH} = −2mA		2.4			V
I_{OS}	Output short-circuit current*	V_{CC} = MAX V_O = 0V		−10		−90	mA
I_{CC}	Supply current	V_{CC} = MAX	SN54S516		370	500†	mA
			SN74S516		370	450†	

* Not more than one output should be shorted at a time, and the duration of the short-circuit should not exceed one second.
† At code temperatures see the "I_{CC} vs Temperature" curves on the next page for more complete information. The typical values shown here are at 5.0V.

Switching Characteristics Over Operating Conditions

SYMBOL	PARAMETER		FIGURE	MILITARY MIN	MILITARY TYP	MILITARY MAX	COMMERCIAL MIN	COMMERCIAL TYP	COMMERCIAL MAX	UNIT
t_{BO}	Bus output delay from CK for outputting data; C_L = 30pF		8		70	120		70	95	ns
t_{PXZ}	Output disable delay	From I_2-I_0 to bus			30	70		30	65	ns
		From $\overline{GO}$ to bus			20	50		20	40	
t_{PZX}	Output enable delay; C_L = 30pF	From I_2-I_0 to bus			55	90		55	80	ns
		From $\overline{GO}$ to bus			25	55		25	45	
t_{OVR}	Overflow output delay from CK; C_L = 30pF		8		60	120		60	95	ns

* During operations when the bus is being used to output data.

8x8 High Speed Schottky Multipliers
SN54/74S557 SN54/74S558

Features/Benefits

- **Industry-standard 8x8 multiplier**
- **Multiplies two 8-bit numbers; gives 16-bit result**
- **Cascadable; 56x56 fully-parallel multiplication uses only 34 multipliers for the most-significant half of the product**
- **Full 8x8 multiply in 60ns worst case**
- **Three-state outputs for bus operation**
- **Transparent 16-bit latch in 'S557**
- **Plug-in compatible with original Monolithic Memories' 67558**

Description

The 'S557/'S558 is a high-speed 8x8 combinatorial multiplier which can multiply two eight-bit unsigned or signed twos-complement numbers and generate the sixteen-bit unsigned or signed product. Each input operand X and Y has an associated Mode control line, X_M and Y_M respectively. When a Mode control line is at a Low logic level the operand is treated as an unsigned eight-bit number, while if the Mode control is at a High logic level the operand is treated as an eight-bit signed twos-complement number. Additional inputs, R_S and R_U, (R, S557) allow the addition of a bit into the multiplier array at the appropriate bit positions for rounding signed or unsigned fractional numbers.

The 'S557 internally develops proper rounding for either signed or unsigned numbers by combining the rounding input R with X_M, Y_M, $\overline{X_M}$, and $\overline{Y_M}$ as follows:

$R_U = \overline{X_M} \cdot \overline{Y_M} \cdot R$ = Unsigned rounding input to 2^7 adder.

$R_S = (X_M + Y_M)\ R$ = Signed rounding input to 2^6 adder.

Since the 'S558 does not require the use of pin 11 for the latch enable input G, R_S and R_U are brought out separately.

The most-significant product bit is available in both true and complemented form to assist in expansion to larger signed multipliers. The product outputs are three-state, controlled by an assertive-low Output Enable which allows several multipliers to be connected to a parallel bus or be used in a pipelined system. The device uses a single +5V power supply and is packaged in a standard 40-pin DIP.

Ordering Information

PART NUMBER	PACKAGE	TEMPERATURE
54S557, 54S558	J40, F42	Military
74S557, 74S558	N40, J40	Commercial

Logic Symbol

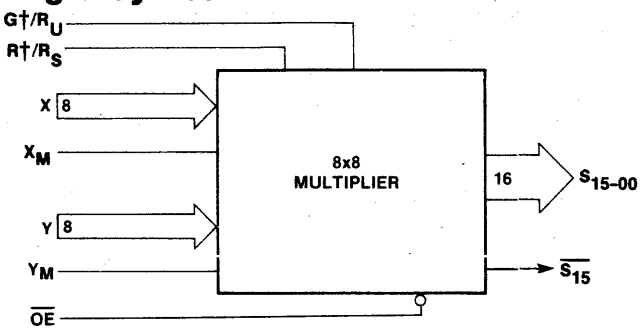

Pin Configuration

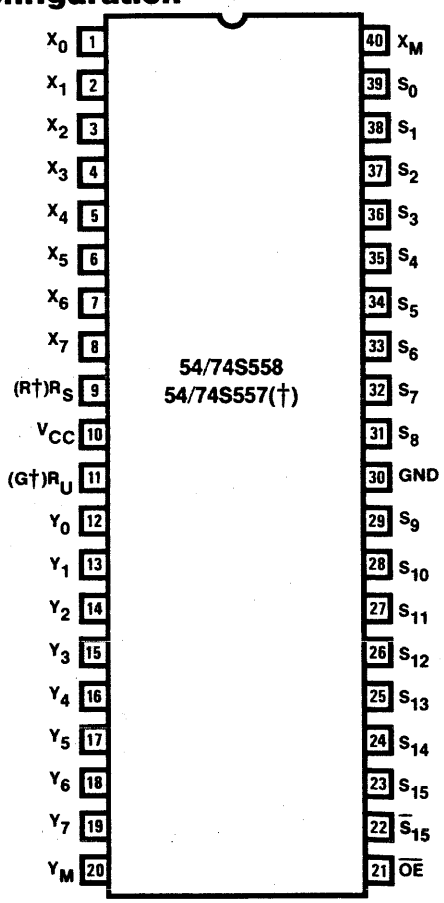

†For 54/74S557 Pin 9 is R and Pin 11 is G.

DIGITAL

Monolithic Memories

2175 Mission College Boulevard, Santa Clara, CA 95050 Tel: (408) 970-9700 TWX: 910-338-2376 TWX: 910-338-2374

Monolithic Memories

© IC MASTER 1984

Logic Diagram

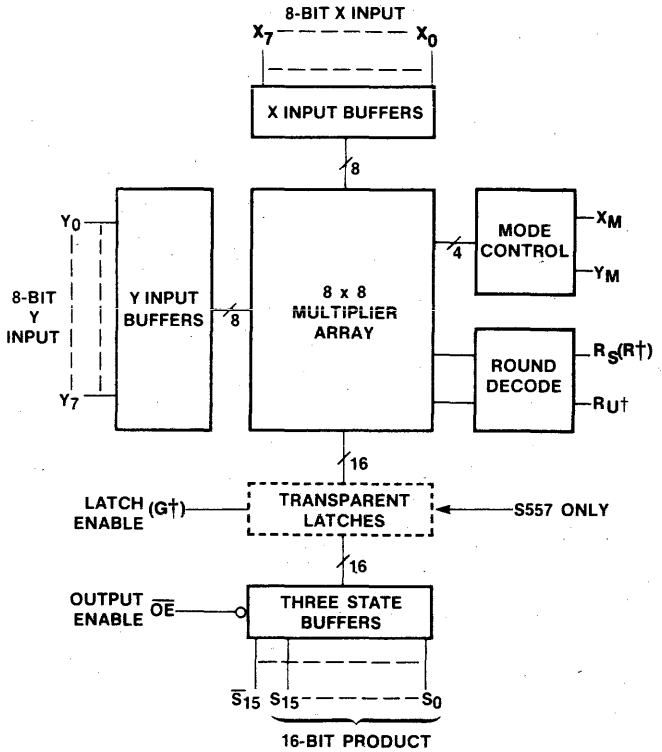

†For 54/74S557 Pin 9 is R and Pin 11 is G.

'S557

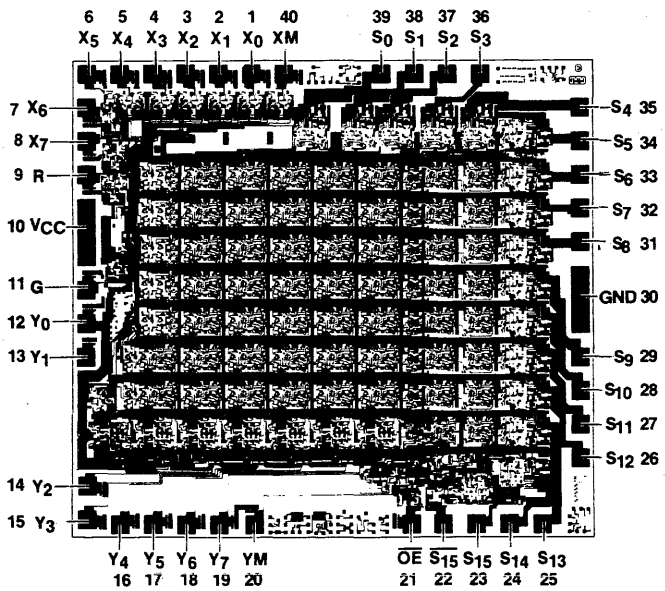

DIE SIZE: 144x130 mil

'S558

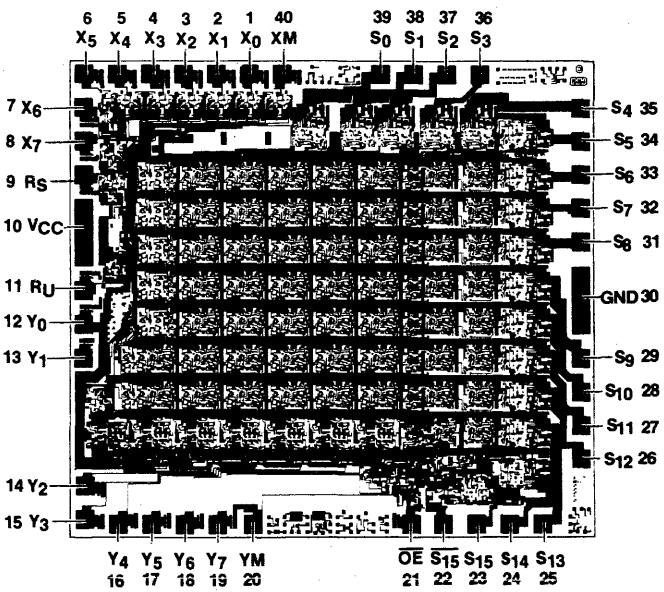

DIE SIZE: 144x130 mil

2175 Mission College Boulevard, Santa Clara, CA 95050 Tel: (408) 970-9700 TWX: 910-338-2376 TWX: 910-338-2374
Monolithic Memories

© IC MASTER 1984

Absolute Maximum Ratings

Supply Voltage, V_{CC} 7V
Input Voltage 7V
Off-state output voltage 5.5V
Storage temperature ..... –65° to +150°C

Operating Conditions

SYMBOL	PARAMETER	DEVICE	MILITARY MIN	MILITARY TYP	MILITARY MAX	COMMERCIAL MIN	COMMERCIAL TYP	COMMERCIAL MAX	UNITS
V_{CC}	Supply voltage	all	4.5	5	5.5	4.75	5	5.25	V
T_A	Operating free-air temperature	all	-55		125*	0		75	°C
t_{su}	X_i, Y_i to G set	'S557	50			40			ns
t_h	X_i, Y_i to G hold time	'S557	0			0			ns
t_w	Latch enable pulse width	'S557	20			15			ns

* Case temperature

Electrical Characteristics Over Operating Conditions

SYMBOL	PARAMETER	TEST CONDITIONS		MIN	TYP†	MAX	UNIT
V_{IL}	Low-level input voltage					0.8	V
V_{IH}	High-level input voltage			2			V
V_{IC}	Input clamp voltage	V_{CC} = MIN	I_I = –18mA			–1.5	V
I_{IL}	Low-level input current	V_{CC} = MAX	V_I = 0.5V			–1	mA
I_{IH}	High-level input current	V_{CC} = MAX	V_I = 2.4V			100	μA
I_I	Maximum input current	V_{CC} = MAX	V_I = 5.5V			1	mA
V_{OL}	Low-level output voltage	V_{CC} = MIN	I_{OL} = 8mA			0.5	V
V_{OH}	High-level output voltage	V_{CC} = MIN	I_{OH} = –2mA	2.4			V
I_{OZL}	Off-state output current	V_{CC} = MAX	V_O = 0.5V			–100	μA
I_{OZH}			V_O = 2.4V			100	μA
I_{OS}	Output short-circuit current*	V_{CC} = MAX	V_O = 0V	–20		–90	mA
I_{CC}	Supply current	V_{CC} = MAX			200	280	mA

* Not more than one output should be shorted at a time and duration of the short-circuit should not exceed one second.

† Typicals at 5.0V V_{CC} and 25°C T_A.

Switching Characteristics Over Operating Conditions

SYMBOL	PARAMETER	DEVICE	TEST CONDITIONS	MILITARY MIN	MILITARY TYP†	MILITARY MAX	COMMERCIAL MIN	COMMERCIAL TYP†	COMMERCIAL MAX	UNIT
t_{PD1}	X_i, Y_i to S_{7-0}	All	C_L = 30pF, R_L = 560Ω, see test figures		40	60		40	50	ns
t_{PD2}	X_i, Y_i to S_{15-8}	All			45	70		45	60	ns
t_{PD3}	X_i, Y_i to $\overline{S}_{15}$	All			50	75		50	65	ns
t_{PD4}	G to S_i	'S557			20	40		20	35	ns
t_{PXZ}	$\overline{OE}$ to S_i	All			20	40		20	30	ns
t_{PZX}	$\overline{OE}$ to S_i	All			15	40		15	30	ns

2175 Mission College Boulevard, Santa Clara, CA 95050 Tel: (408) 970-9700 TWX: 910-338-2376 TWX: 910-338-2374
Monolithic Memories

© IC MASTER 1984

Memory Support Series Selection Guide

Dynamic RAM Controllers

DESCRIPTION	PART NUMBER	APPLICATIONS	PINS
Multi-mode DRAM Controller/Driver	SN74S408-3 SN74S408-2 SN74S408	16K 64K DRAMs	48
Multi-mode DRAM Controller/Driver	SN74S409-3 SN74S409-2 SN74S409	16K, 64K, 256K DRAMs	48

Octal Dynamic-RAM Drivers

DRAM Drivers with complementary Enables	SN54/74S700/731	Plug compatible with 'S210/241	20
DRAM Drivers with assertive Low Enables	SN54/74S730/734	Replaces Am2965/66 also pin compatible with 'S240/244	20

Power-Strobe Device

Quad Power/Logic Strobe	HD1-6600-8/HD1- 6605-8 HD1-6600-5/HD1-6605-5 HD1-6600-2/HD1-6605-2	Useful to "power down" devices to reduce total system power	16

Arithmetic Elements and Logic Selection Guide

Arithmetic and Logic Elements

DESCRIPTION	PART NUMBER	MAX ADD TIME	MAX CARRY (OR GENERATE) TIME	PINS
4-bit ALU	5/74S381	27 ns	20 ns	20
4 Group carry-look-ahead generator	5/74S182		7 ns	16

Encoder Priority

DESCRIPTION	PART NUMBER	OUTPUT	MAX LOGIC DELAYS	PINS
High-Speed Schottky Priority Encoders	SN54/74S148 SN54/74S348	Totem-Pole 3-State	$D_i \rightarrow A_i$ = 13nsec D_i — GS, EO = 15nsec	16

Look-Up Tables

DESCRIPTION	PART NUMBER	MAX ACCESS TIME	PINS
Sine (0°-90°) Look-Up Table	6086/7	100 ns	24
	5086/7	150 ns	24

MOTOROLA
SEMICONDUCTORS
P.O. BOX 20912 • PHOENIX, ARIZONA 85036

DIGITAL LOGIC FAMILIES

CMOS • ECL • TTL
MDTL • MHTL

A "Supermarket" For Standard Logic

Motorola carries a comprehensive inventory of standard components encompassing almost all major digital logic families and technologies.

Complementary (very low power) MOS (CMOS)

Series MC14000/MC14500 — These standard lines of *MSI/SSI circuits* contain a complement of nearly 200 device types with which to implement complete system designs. They feature the new JEDEC B-Series specifications with low-power-Schottky compatible outputs. A faster non-buffered line of devices is compatible with the B-Series, as well as with standard Schottky TTL, for mix-and-match versatility.

Series MC14400 — This series of highly complex LSI devices consists of single-chip "subsystems" tailored for specific application. Included are such major functions as smoke detectors, automotive speed-control processors, communications/telephone subsystems, and a variety of other function-dedicated components.

MECL (very high-speed) Logic Circuit

Motorola manufactures three lines of emitter-coupled logic (ECL) circuits: The pervasive MECL 10,000 family, its new higher speed version MECL 10KH and the MECL III family.

MECL 10,000 Series — A complement of more than 80 circuits, ranging from simple gates to complex functions, such as arithmetic units and memories, populates this family of high-speed logic circuits. Devices are available in two temperature ranges −30 to 85°C and −55 to 125°C to meet the highest standards of performance.

MECL FAMILY COMPARISONS

Feature	MECL 10,000		MECL III
	10,100 Series 10,500 Series	10,200 Series 10,600 Series	
1. Gate Propagation Delay	2 ns	1.5 ns	1 ns
2. Output Edge Speed	2.2 ns	2.0 ns	1 ns
3. Flip-Flop Toggle Speed	160 MHz	250 MHz	300–500 MHz
4. Gate Power	25 mW	25 mW	60 mW
5. Speed Power Product	50 pJ	37 pJ	60 pJ

*Average for Equivalent LSI Gate.

MECL III series — Basic logic circuits designed for high-speed requirements, as in test and communications equipment, and in high-speed sections of larger systems. MECL III circuits are compatible with MECL 10K/10KH devices.

TTL Circuits

Motorola manufactures several different families of TTL circuits:

The SN54LS/74LS, The MC4000/4300 Series
SN54ALS/74ALS,
MC54F/MC74F
Schottky Series

The newest families to be announced, 54/74ALS Advanced Low power Schottky and 54/74F FAST TTL, offer superior speed/power performance over their 54/74LS and 54/74S counterparts. Several design enhancements have also been incorporated in these new families to improve performance and minimize potential applications difficulties. Both families are fully specified over temperature as well as a 10% power supply voltage range. These families offer a wide selection of SSI, MSI, and LSI components to simplify system design.

Motorola's 54/74LS Low power Schottky TTL line offers a selection of over 180 devices and is 100% compatible with ALS and FAST TTL.

An impressive line of standard TTL complex functions in the MC4000/4300 series, provides significant reduction in package count over systems implemented with simpler families. Phase Locked Loop functions are also available in this series.

Other Logic Families

MHTL Series MC660 — for use in equipment designed for high-noise environments.

MDTL Series MC830/930 — An early logic family manufactured primarily for replacement purposes.

MC12000/12500 — Phase Locked Loop Series.

MECL, MHTL, and MDTL are trademarks of Motorola Inc.

© IC MASTER 1984

MOTOROLA
SEMICONDUCTORS
P.O. BOX 20912 • PHOENIX, ARIZONA 85036

DIGITAL LOGIC FAMILIES

MECL 10KH

New High-Speed Logic Family

Much of the MECL10KH Family of high-speed logic circuits will be pin-compatible with the existing MECL10K Family, but double the performance standards. System clock rates are increased as much as 40%, parasitic capacitance drops by 50%, and propagation delay is reduced by 50% with no corresponding increase in power dissipation. Pin compatibility permits upgrading of existing designs without major modifications. More complex logic functions will be available in the 10KH family than were possible in MECL10K. The MECL10KH Family is performance compatible with the MECL Macrocell Array.

Typical family characteristics for 10K and 10KH circuits

	10K	10KH
Speed (ns)	2.0	1.0
Power (mW)	25	22/25*
Power-speed product (pJ)	50	22/25
Rise/fall times (ns) (20–80%)	2.0	1.2
Temperature range (°C)	−30 to +85	0 to +75
Voltage regulated	No	Yes
Technology	Junction isolated	Oxide isolated

*V_{EE} = 4.5 V/5.2 V

MECL 10KH DC Specifications
V_{EE} = −5.2V ± 5%
R Load = 50 Ω to −2.0 Vdc

Parameter	0°C Min	0°C Max	25°C Min	25°C Max	75°C Min	75°C Max
V_{OH}	—	−0.840	—	−0.810	—	−0.735
V_{OHA}	−1.020	—	−0.980	—	−0.920	—
V_{OL}	−1.950	—	−1.950	—	−1.950	—
V_{OLA}	—	−1.630	—	−1.630	—	−1.600
V_{IHA}	—	−1.170	—	−1.130	—	−1.070
V_{ILA}	−1.480	—	−1.480	—	−1.450	—

MECL 10KH AC Specifications and Tracking

Parameter	0°C Min	0°C Typ	0°C Max	25°C Min	25°C Typ	25°C Max	75°C Min	75°C Typ	75°C Max	Units
t_{PD}	0.7	1.1	1.6	0.7	1.0	1.5	0.7	1.1	1.7	ns
	Min		Max	Min		Max	Min		Max	
t_r (20–80%)	0.8		2.2	0.7		2.0	0.8		2.2	ns
t_f (20–80%)	0.8		2.2	0.7		2.0	0.8		2.2	ns

V_{EE} = −5.2V ±5%

Parameter	Propagation delay (ns)* Typ	Propagation delay (ns)* Max	Delay variation vs temp (ps/°C) Typ	Delay variation vs temp (ps/°C) Max	Delay variation vs supply (ps/V) Typ	Delay variation vs supply (ps/V) Max
t_{PD} 10KH	1.0	1.5	0.5	4.0	0	0

*V_{EE} = 5.2V, Temp = 25°C

MECL and Macrocell are trademarks of Motorola Inc.

Initial 10KH products

Device	Function	Available
MC10H016	Binary Counter	Now
MC10H100	Quad 2-Input NOR Gate W/Strobe	Now
MC10H101	Quad OR/NOR Gate	Now
MC10H102	Quad 2-Input NOR Gate	Now
MC10H103	Quad 2-Input OR Gate	Now
MC10H104	Quad AND Gate	Now
MC10H105	Triple 2-3-2 Input OR/NOR Gate	Now
MC10H106	Triple 4-3-3 Input NOR Gate	Now
MC10H107	Triple Exclusive OR/NOR Gate	Now
MC10H109	Dual 4-5 Input OR/NOR Gate	Now
MC10H113	Quad Exclusive OR Gate	1Q84
MC10H115	Quad Line Receiver	Now
MC10H116	Triple Line Receiver	Now
MC10H117	Dual 2-Wide OR-AND/OR-AND Invert Gate	Now
MC10H118	Dual 2-Wide 3-Input OR-AND Gate	Now
MC10H119	4-Wide 4-3-3-3 Input OR-AND Gate	Now
MC10H121	4-Wide OR-AND/OR-AND-Invert Gate	Now
MC10H123	Triple 4-3-3 Input Bus Driver (25 Ω)	4Q83
MC10H124	Quad TTL-To-MECL Translator	Now
MC10H125	Quad MECL-To-TTL Translator	Now
MC10H130	Dual D Latch	Now
MC10H131	Dual Master-Slave Flip-Flop	Now
MC10H135	Dual J-K Master-Slave Flip-Flop	4Q83
MC10H136	Universal Hexadecimal Counter	Now
MC10H141	4-Bit Universal Shift Register	Now
MC10H145	16 X 4-Bit Register File	Now
MC10H155	8 X 2-Bit Content Addressable Memory	1Q84
MC10H158	Quad 2-Input Multiplexer (Non-Inverting Output)	Now
MC10H159	Quad 2-Input Multiplexer (Inverting Output)	Now
MC10H160	12-Bit Parity Generator/Checker	Now
MC10H161	Binary To 1-8 Line Decoder (Low)	Now
MC10H162	Binary To 1-8 Line Decoder (High)	Now
MC10H164	8 Line Multiplexer	Now
MC10H165	8-Input Priority Encoder	Now
MC10H166	5-Bit Magnitude Comparator	Now
MC10H171	Dual Binary To 1-4 Decoder (Low)	1Q84
MC10H172	Dual Binary To 1-4 Decoder (High)	1Q84
MC10H173	Quad 2-Input MUX W/Latch	Now
MC10H174	Dual e to 1 Multiplexer	Now
MC10H175	Quint Latch	Now
MC10H176	Hex D Flip-Flop	Now
MC10H179	Look Ahead Carry Block	Now
MC10H180	Dual High-Speed Adder/Subtracter	Now
MC10H181	4-Bit ALU	1Q84
MC10H186A	Hex D Flip-Flop W/Common Reset	4Q83
MC10H188	Hex Buffer W/Enable	4Q83
MC10H189	Hex Inverter W/Enable	4Q83
MC10H209	Dual 4-5-Input OR/NOR Gate	Now
MC10H210	Dual 3-Input, 3-Output OR Gate	Now
MC10H211	Dual 3-Input, 3-Output NOR Gate	Now
MC10H330	Quad Bus Transceiver W/2-1 Output MUX (25 Ω)	4Q83
MC10H332	Quad Bus Transceiver W/4-1 Output MUS (25 Ω)	4Q83
MC10H334	Quad Bus Transceiver W/Transmit/Receiver Latches (25 Ω)	4Q83
MC10H350	Quad MECL to TTL Translator (Single Power Supply +5.0V or −5.2V)	4Q83
MC10H423	Triple 3-Input Bus Driver W/Enable (25 Ω)	4Q83
MC10H424	Quad TTL-To-MECL Translator (ECL Strobe)	4Q83

© IC MASTER 1984

FAST TTL

MC54F00 Series (−55 to +125°C)
MC74F00 Series (0 to +70°C)

Suffix: N . . . Plastic (only 74-series)
J . . . Ceramic (54/74 series)

Device	Function	Samples	Pins
F00	Quad 2-Input NAND Gate	A	14
F02	Quad 2-Input NOR Gate	A	14
F04	Hex Inverter	A	14
F08	Quad 2-Input AND Gate	A	14
F10	Triple 3-Input NAND Gate	A	14
F11	Triple 3-Input AND Gate	A	14
F20	Dual 4-Input NAND Gate	A	14
F32	Quad 2-Input OR Gate	A	14
F64	4-2-2-3 Input AND-OR-INVERT Gate	A	14
F74	Dual D Flip-Flop	A	14
F86	Quad Ex/OR Gate	3Q83	14
F109	Dual J-K Flip-Flop w/Preset	A	16
F112	Dual J-K Flip-Flop	3Q83	16
F113	Dual J-K Flip-Flop	3Q83	14
F114	Dual J-K Flip-Flop	3Q83	14
F138	1-of-8 Decoder/Demultiplexer	3Q83	16
F139	Dual 1-of-4 Decoder/Demultiplexer	3Q83	16
F151	8-Input Multiplexer	4Q83	16
F153	Dual 4-Input Multiplexer	A	16
F157	Quad 2-Input Multiplexer	4Q83	16
F158	Quad 2-Input Multiplexer	4Q83	16
F160	BCD Decade Counter, Asynchronous Reset	4Q83	16
F161	4-Bit Binary Counter, Asynchronous Reset	4Q83	16
F162	BCD Decade Counter, Synchronous Reset	4Q83	16
F163	4-Bit Binary Counter, Synchronous Reset	4Q83	16
F168	Up/Down Decade Counter	1H84	16
F169	Up/Down Binary Counter	1H84	16
F174	Hex D Flip-Flop	3Q83	16
F175	Quad D Flip-Flop	3Q83	16
F181	4-Bit ALU	1H84	24
F182	Look Ahead Carry Generator	1H84	16
F189	64-Bit RAM/3-State	2H84	16
F190	Up/Down Decade Counter	4Q83	16
F191	Up/Down Binary Counter	4Q83	16
F192	Up/Down Decade Counter with Clear	4Q83	16
F193	Up/Down Binary Counter with Clear	4Q83	16
F194	Universal Shift Register	4Q83	16
F195	4-Bit Shift Register	4Q83	16
F240	Octal Bus/Line Driver/Inverting/3-State	A	20
F241	Octal Bus/Line Driver/3-State	A	20
F242	Quad Bus Transceiver/Inverting/3-State	A	14
F243	Quad Bus Transceiver/Non-Inverting/ 3-State	A	14
F244	Octal Bus Driver/Non-Inverting/3-State	A	20
F245	Octal Bus Transceiver	A	20
F251	8-Input Multiplexer/3-State	4Q83	16
F253	Dual 4-Input Multiplexer/3-State	A	16
F257	Quad 2-Input Multiplexer/3-State	4Q83	16
F258	Quad 2-Input Multiplexer, Inverting/3-State	4Q83	16
F280	9-Bit Odd/Even Parity Gen/Checker	2H84	14
F283	4-Bit Full Adder	2H84	20
F289	64-Bit RAM, Open-Collector	2H84	16
F299	8-Bit Shift/Store Register	1H84	20
F323	8-Bit Universal Shift/Storage Register	1H84	20
F350	4-Bit Shifter/3-State	1H84	16
F352	Dual 4-Input Multiplexer	A	16
F353	Dual 4-Input Multiplexer/3-State	A	20
F373	Octal Transparent Latch/3-State	3Q83	16
F374	Octal D Flip-Flop/3-State	A	16
F378	Hex Parallel D Register w/Enable	3Q83	20
F379	Quad Parallel Register w/Enable	3Q83	20
F381	4-Bit ALU	1H84	20
F382	4-Bit ALU	1H84	20
F521	Octal Comparitor	1Q84	20
F533	Octal Transparent Latch/3-State	A	20
F534	Octal D Flip-Flop/3-State	A	20
F537	1-of-10 Decoder/3-State	1H84	20
F538	1-of-8 Decoder/3-State	1H84	20
F539	1-of-4 Decoder/3-State	1H84	20
F620	Octal Bus Transceiver/Inverting/3-State	3Q83	20
F623	Octal Bus Transceiver/3-State	3Q83	20
F640	Octal Bus Transceiver/Inverting/3-State	3Q83	20
F643	Octal Bus Transceiver/Inverting/True/ 3-State	3Q83	20
F2960	Error Detection and Correction Unit (EDAC)	3Q83	48
F2961	EDAC Bus Buffer, Inverting	1H84	24
F2962	EDAC Bus Buffer, Non-Inverting	1H84	24
F2968	Dynamic Memory Controller	4Q83	48
F2969	Memory Timing Controller w/EDAC	4Q83	48
F2970	Memory Timing Controller w/o EDAC	4Q83	24

ALS TTL

SN54ALS00 Series (−55 to +125°C)
SN74ALS00 Series (0 to +70°C)

Suffix: N . . . Plastic (only 74-series)
J . . . Ceramic (54/74 series)

Device	Function	Samples	Pins
ALS00	Quad 2-Input NAND Gate	A	14
ALS01	Quad 2-Input NAND Gate, Open-Collector	4Q83	14
ALS02	Quad 2-Input NOR Gate	A	14
ALS03	Quad 2-Input NAND Gate, Open-Collector	A	14
ALS04	Hex Inverter	A	14
ALS05	Hex Inverter, Open-Collector	A	14
ALS08	Quad 2-Input AND Gate	A	14
ALS09	Quad 2-Input AND Gate, Open-Collector	A	14
ALS10	Triple 3-Input NAND Gate	A	14
ALS11	Triple 3-Input AND Gate	A	14
ALS12	Triple 3-Input NAND Gate, Open-Collector	A	14
ALS13	Dual 4-Input Schmitt Trigger	4Q83	14
ALS14	Hex Schmitt Trigger	4Q83	14
ALS15	Triple 3-Input NAND Gate, Open-Collector	A	14
ALS20	Dual 4-Input NAND Gate	A	14
ALS21	Dual 4-Input AND Gate	A	14
ALS22	Dual 4-Input NAND Gate, Open-Collector	A	14
ALS27	Triple 3-Input NOR Gate	A	14
ALS28	Quad 2-Input NOR Buffer	4Q83	14
ALS32	Quad 2-Input OR Gate	4Q83	14
ALS33	Quad 2-Input NOR Buffer, Open-Collector	4Q83	14

© IC MASTER 1984

ALS TTL (continued)

Device	Function	Samples	Pins
ALS37	Quad 2-Input NAND Buffer	A	14
ALS38	Quad 2-Input NAND Buffer, Open-Collector	A	14
ALS40	Dual 4-Input NAND Buffer	4Q83	14
ALS51	Dual 2-Wide, 2-3-Input AND-OR-INVERT Gate	A	14
ALS55	2-Wide, 4-Input AND-OR-INVERT Gate	A	14
ALS74	Dual D Flip-Flop	A	14
ALS91	8-Bit Serial-In/Serial-Out Shift Register	1H84	14
ALS109	Dual J-K Flip-Flop w/Preset	4Q83	16
ALS132	Quad 2-Input Schmitt Trigger	4Q83	14
ALS138	1-of-8 Decoder/Demultiplexer	4Q83	16
ALS139	Dual 1-of-4 Decoder/Demultiplexer	4Q83	16
ALS151	8-Input Multiplexer	3Q83	16
ALS153	Dual 4-Input Multiplexer	1Q84	16
ALS157	Quad 2-Input Multiplexer/Non-Inverting	A	16
ALS158	Quad 2-Input Multiplexer/Inverting	A	16
ALS160	BCD Decade Counter/Asynchronous Reset (9310 Type)	A	16
ALS161	4-Bit Binary Counter, Asynchronous Reset (9316 Type)	A	16
ALS162	BCD Decade Counter/Synchronous Reset	A	16
ALS163	4-Bit Binary Counter/Synchronous Reset	A	16
ALS164	8-Bit Serial-In/Parallel-Out Shift Register	1H84	14
ALS168	4-Bit Up/Down Decade Counter/ Synchronous Reset	4Q83	16
ALS169	4-Bit Up/Down Binary Counter/ Synchronous Reset	4Q83	16
ALS190	Up/Down Decade Counter	A	16
ALS191	Up/Down Binary Counter	A	16
ALS192	Up/Down Decade Counter w/Clear	A	16
ALS193	Up/Down Binary Counter w/Clear	A	16
ALS238	1-of-8 Decoder/Demultiplexer/(Active High)	4Q83	16
ALS239	Dual 1-of-4 Decoder/Demultiplexer/ (Active High)	4Q83	16
ALS240	Octal Bus/Line Driver/Inverting/3-State	A	20
ALS241	Octal Bus/Line Driver/3-State	A	20
ALS242	Quad Bus Transceiver/Inverting/3-State	A	14
ALS243	Quad Bus Transceiver/Non-Inverting/ 3-State	A	14
ALS244	Octal Driver/Non-Inverting/3-State	A	20
ALS245	Octal Bus Transceiver/Non-Inverting/ 3-State	A	20
ALS251	8-Input Multiplexer/3-State	3Q83	16
ALS253	Dual 4-Input Multiplexer/3-State	1H84	16
ALS257	Quad 2-Input Multiplexer/Non-Inverting/ 3-State	1H84	16
ALS258	Quad 2-Input Multiplexer/Inverting/3-State	1H84	16
ALS273	Octal D Flip-Flop w/Clear	A	20
ALS352	Dual 4-Multiplexer/Inverting ALS153	1H84	16
ALS353	Dual 4-Multiplexer/3-State ALS352	1H84	16
ALS373	Octal Transparent Latch/3-State	3Q83	20
ALS374	Octal D Flip-Flop/3-State	3Q83	20
ALS377	Octal D Flip-Flop w/Enable	A	20
ALS533	Octal Transparent Latch/Inverting	1H84	20
ALS534	Octal D-Type Flip-Flop/Inverting	1H84	20
ALS537	1-of-10 Decoder/3-State	1H84	20
ALS538	1-of-8 Decoder/3-State	1H84	20
ALS539	Dual 1-of-4 Decoder/3-State	1H84	20
ALS540	Octal Buffer/3-State	4Q83	20
ALS541	Octal Buffer/3-State	4Q83	20
ALS560	4-Bit Decade Counter/3-State	A	20
ALS561	4-Bit Binary Counter/3-State	A	20
ALS563	8-Bit Latch/3-State	1H84	20
ALS564	Octal D Flip-Flop/3-State	1H84	20
ALS568	Decade Up/Down Counter/3-State	4Q83	20
ALS569	Binary Up/Down Counter/3-State	4Q83	20
ALS573	Octal Transparent Latch/3-State	1H84	20
ALS574	Octal D Flip-Flop/3-State	1H84	20

Device	Function	Samples	Pins
ALS575	Octal D Flip-Flop/Synchronous Clear/ 3-State	1H84	20
ALS576	Octal D Flip-Flop/Inverting/3-State	1H84	20
ALS577	Octal D Flip-Flop/Inverting/Synchronous Clear/3-State	1H84	20
ALS580	Octal Transparent Latch/Inverting/3-State	1H84	20
ALS620	Octal Transceiver w/Storage/3-State	A	20
ALS621	Octal Transceiver w/Storage/ Open-Collector	A	20
ALS622	Octal Transceiver w/ Storage/ Open-Collector	A	20
ALS623	Octal Transceiver w/Storage/3-State	A	20
ALS638	Octal Bus Transceiver/Inverting/3-State	A	20
ALS639	Octal Bus Transceiver/3-State	A	20
ALS640	Octal Bus Transceiver/Inverting/3-State	A	20
ALS641	Octal Bus Transceiver/Non-Inverting/ Open-Collector	A	20
ALS642	Octal Bus Transceiver/Inverting/ Open-Collector	A	20
ALS643	Octal Bus TransceiverTrue/Inverting/3-State	A	20
ALS644	Octal Bus Transceiver/True/Inverting/ Open-Collector	A	20
ALS646	Octal Transceiver/Latch/Multiplexer/ Non-Inverting/3-State	1H84	24
ALS647	Octal Transceiver/Latch/Multiplexer/ Non-Inverting/Open-Collector	1H84	24
ALS648	Octal Transceiver/Latch/Multiplexer/ Inverting/3-State	1H84	24
ALS649	Octal Transceiver/Latch/Multiplexer/ Inverting/Open-Collector	1H84	24
ALS651	Octal Bus Transceiver/Register/3-State	1H84	24
ALS652	Octal Bus Transceiver/Register/3-State	1H84	24
ALS653	Octal Bus Transceiver/Register	1H84	24
ALS654	Octal Bus Transceiver/Register	1H84	24
ALS671	Bidirectional Shift Register/Latch/ Multiplexer/3-State	4Q83	20
ALS672	Bidirectional Shift Register/Latch/ Multiplexer/3-State	4Q83	20
ALS690	Decade Counter/Latch/Multiplexer/ Asynchronous Reset/3-State	A	20
ALS691	Binary Counter/Latch/Multiplexer/ Asynchronous Reset/3-State	A	20
ALS692	Decade Counter/Latch/Multiplexer/ Synchronous Reset/3-State	A	20
ALS693	Binary Counter/Latch/Multiplexer/ Synchronous Reset/3-State	A	20
ALS694	Decade Counter/Latch/Multiplexer/ Synchronous/Asynchronous Reset/ 3-State	A	20
ALS695	Binary Counter/Latch/Multiplexer/ Synchronous/Asynchronous Reset/ 3-State	A	20
ALS696	Decade Counter/Register/Multiplexer/ 3-State	4Q83	20
ALS697	Binary Counter/Register/Multiplexer/3-State	4Q83	20
ALS698	Decade Counter/Register/Multiplexer/ 3-State	4Q83	20
ALS699	Binary Counter/Register/Multiplexer/3-State	4Q83	20
ALS790	Error Detection and Correction Circuit	see F2960	
ALS873	Octal Transparent Latch	2H84	24
ALS874	Octal D Flip-Flop	2H84	24
ALS876	Octal D Flip-Flop/Inverting	2H84	24
ALS878	Dual 4-Bit D Flip-Flop/Synchronous Clear/ 3-State	2H84	24
ALS879	Dual 4-Bit D Flip-Flop/Inverting/ Synchronous Clear/3-State	2H84	24
ALS880	Octal Transparent Latch/Inverting	2H84	24

© IC MASTER 1984

MOTOROLA
SEMICONDUCTORS
3501 ED BLUESTEIN BLVD., AUSTIN, TEXAS 78721

High-Speed CMOS Logic Family

MC54/74HCXXX

For the first time, a higher-performance standard digital logic family is available that combines the popular features of CMOS and the traditional characteristics of LSTTL. Previously, designers were forced to choose between CMOS low power dissipation and good noise immunity and LSTTL high operating frequencies, short propagation delays, and good fanout or drive capability. The best of both technologies is now available in Motorola's newest digital logic family — High-Speed CMOS Logic (MC54/74HC). Higher performance is available for most applications — yielding speed improvements as well as significant cost savings.

The family is composed of gates, flip-flops, buffers, octal devices and various MSI functions such as counters, shift registers, and decoders. Many of the popular CMOS and LS functions have been incorporated into the new logic family with full pinout capability for each function. In addition, the family has temperature ratings of −40 to +85°C (74 series) and −55 to 125°C (54 series) for both commercial and extended temperature requirements. The base LS supply voltage of 5 V ± 10% has been increased to a full rating of 2-6 V with the absolute maximum limited at −0.5 and 7 V. Because of its extra speed and performance, the High-Speed CMOS Logic Family provides an ideal interface for CMOS memory and microprocessor system applications. Examples of the operating parameters are shown in the charts below.

FAMILY COMPARISONS IN KEY SPECIFICATIONS

@ 5 Vdc, −40°C to 85°C, unless otherwise indicated
(2-input NAND gate)

Specification	CMOS	LS	HC
Propagation Delay @ 25°C (t_{PHL}/t_{PLH})	250 ns	15 ns	15 ns
Quiescent Power Dissipation	40 μW	22 mW	100 μW
Input Current	±1.0 μA	0.1 mA	±1.0 μA
Maximum Operating Frequency @ 25°C (f_{max})	>1 MHz	30 MHz	30 MHz
Fanout Capability (LS Drive)	1 Load	10 Loads	10 Loads
Worst Case Noise Margins V_{NL} V_{NH}	 29% V_{CC} 29% V_{CC}	 8% V_{CC} 14% V_{CC}	 19% V_{CC} 29% V_{CC}
Quiescent Current (Per Package)	7.5 μA	4.4 mA	20 μA
Operating Temperature	−40 to +85°C −55 to +125°C	0 to +70°C −55 to +125°C	−40 to +85°C −55 to +125°C

Ninety-five (95) devices are available through September 1983, with specific device introductions continuing through 1984. Contact your Motorola representative for pricing and sample availability.

SWITCHING CHARACTERISTICS

@ 5 Vdc, 25°C

Symbol	Parameters	74HC244 Bus Driver	74HC74 D Flip-Flop	74HC194 Register	74HC00 Gate
f_{max}	Maximum Clock Frequency	—	30 MHz	35 MHz	—
t_{PHL}/t_{PLH}	Prop. Delay Worst Case	20 ns	40 ns	25 ns	15 ns
t_{su}	Setup Time, Data to Clock	—	20 ns	20 ns	—
t_h	Hold Time, Clock to Data	—	5 ns	0 ns	—
t_w	Pulse Width, Clock and Clear	—	16 ns	16 ns	—
t_r	Input Rise Time, Max	500 ns	500 ns	500 ns	500 ns
C_{PD}*	Power Dissipation	50 pF	60 pF	—	20 pF
t_{PZL}/t_{PZH}	Three-State Disable Time	28 ns	—	—	—
t_{PLZ}/t_{PHZ}	Three-State Enable Time	25 ns	—	—	—

*C_{PD} is an equivalent device capacitance for calculating power dissipation using $P_D = C_{PD}V_{CC}^2f + I_{CC}V_{CC}$

Planned Product Line by Function

Function	Number of Devices
Buffers/Inverters	28
Gates	20
Schmitt Triggers	2
Bus Transceivers	10
Latches/Flip-Flops	25
MUX's	10
Demux's/Decoders	12
One Shots	4
Analog Switches	9
Shift Registers	10
Counters	20

© IC MASTER 1984

IC MASTER BELONGS ON YOUR BOOKSHELF

If you use IC MASTER frequently, you can obtain your own copy by ordering now. Use the order cards contained in this publication, or order by telephone as described below.

IC MASTER is a two-volume set of technical data carefully organized to direct the engineer to the integrated circuits and related products that are closest to his specific needs. It is the surest way to find the optimum device to answer an engineering design requirement. By ordering now, you won't have to borrow or search for IC MASTER the next time you need it.

Typical Use of IC MASTER

Can an engineer find out who makes a 64K dynamic RAM with an access time of 120 nanoseconds or faster in less than 30 seconds?
He can if he turns to the Memory section of IC MASTER and looks for the 64K organization (words and bits per word) that he needs.
Because each device is listed in order of access time, he can easily determine the devices that satisfy his speed requirements.

In the United States only:

You can order IC MASTER simply by charging it to your VISA or Master Card credit card. To place your order, call now: (516) 222-2500.
Ask for Extension 314.

ORDER YOUR COPY NOW

Panasonic® PANASONIC INDUSTRIAL COMPANY
Division of Matsushita Electric Corporation of America / Electronic Components Division
One Panasonic Way, Secaucus, N.J. 07094 • Tel: (201) 348-5269 • TWX: 710-992-8920

Bipolar Digital IC LS-TTL DN74LS

Function Groups		Number	Function
Gate	NAND	DN74LS00	Quad 2-input Positive NAND Gates
		DN74LS01	Quad 2-input Positive NAND Gates (with Open Collector Outputs)
		DN74LS03	Quad 2-input Positive NAND Gates (with Open Collector Outputs)
		DN74LS10	Triple 3-input Positive NAND Gates
		DN74LS12	Triple 3-input Positive NAND Gates (with Open Collector Outputs)
		DN74LS20	Dual 4-input Positive NAND Gates
		DN74LS22	Dual 4-input Positive NAND Gates (with Open Collector Outputs)
		DN74LS26	Quad 2-input High-Voltage Interface Positive NAND Gates
		DN74LS30	8-input Positive NAND Gates
	AND	DN74LS08	Quad 2-input Positive AND Gates
		DN74LS09	Quad 2-input Positive AND Gates (with Open Collector Outputs)
		DN74LS11	Triple 3-input Positive AND Gates
		DN74LS15	Triple 3-input Positive AND Gates (with Open Collector Outputs)
		DN74LS21	Dual 4-input Positive AND Gates
	NOR	DN74LS02	Quad 2-input Positive NOR Gates
		DN74LS27	Triple 3-input Positive NOR Gates
		DN74LS260	Dual 5-input Positive NOR Gates
	OR	DN74LS32	Quad 2-input Positive OR Gates
	Exclusive OR	DN74LS86	Quad 2-input Exclusive OR Gates
		DN74LS136	Quad 2-input Exclusive OR Gates (with Open Collector Outputs)
		DN74LS386	Quad 2-input Exclusive OR Gates
	Exclusive NOR	DN74LS266	Quad 2-input Exclusive NOR Gates (with Open Collector Outputs)
	Schmitt Triggers	DN74LS13	Dual 4-input Positive NAND Schmitt-Triggers
		DN74LS14	Hex Schmitt-Trigger Inverters
		DN74LS132	Quad 2-input Positive NAND Schmitt-Triggers
	AND OR INVERT	DN74LS51	2-wide 3-input 2-wide 2-input AND-OR-INVERT Gates
		DN74LS54	4-wide AND-OR-INVERT Gates
		DN74LS55	2-wide 4-input AND-OR-INVERT Gates
Inverters		DN74LS04	Hex Inverters
		DN74LS05	Hex Inverters (with Open Collector Outputs)
Buf-fers	NAND	DN74LS37	Quad 2-input Positive NAND Buffers
		DN74LS38	Quad 2-input Positive NAND Buffers (with Open Collector Outputs)
		DN74LS40	Dual 4-input Positive NAND Buffers
	NOR	DN74LS28	Quad 2-input Positive NOR Buffers
		DN74LS33	Quad 2-input Positive NOR Buffers (with Open Collector Outputs)
Bus Buffers/ Drivers		DN74LS125A	Quad Bus Buffer Gates (with 3-state Outputs)
		DN74LS240	Octal Buffers AND Line Drivers (with 3-state Outputs)
		DN74LS241	Octal Buffers AND Line Drivers (with 3-state Outputs)
		DN74LS244	Octal Buffers AND Line Drivers (with 3-state Outputs)
Drivers		DN74LS365A	Hex Bus Drivers (with 3-state Outputs)
		DN74LS366A	Hex Bus Drivers (with 3-state Outputs)
		DN74LS367A	Hex Bus Drivers (with 3-state Outputs)
		DN74LS368A	Hex Bus Drivers (with 3-state Outputs)
Flip-Flops	J-K	DN74LS73	Dual J-K Flip-Flops (with Reset)
		DN74LS76	Dual J-K Flip-Flops (with Set and Reset)
		DN74LS78	Dual J-K Flip-Flops (with set, Common Reset and Common Clock)
		DN74LS107	Dual J-K Flip-Flops (with Reset)
		DN74LS109	Dual J-K Positive Edge-Triggered Flip-Flops (with Set and Reset)
		DN74LS112	Dual J-K Negative Edge-Triggered Flip-Flops (with Set and Reset)
		DN74LS113	Dual J-K Negative Edge-Triggered Flip-Flops (with Set)
		DN74LS114	Dual J-K Negative Edge-Triggered Flip-Flops (with Set, Common Reset and Common Clock)

© IC MASTER 1984

Panasonic® PANASONIC INDUSTRIAL COMPANY
Division of Matsushita Electric Corporation of America / Electronic Components Division
One Panasonic Way, Secaucus, N.J. 07094 • Tel: (201) 348-5269 • TWX: 710-992-8920

Bipolar Digital IC LS-TTL DN74LS

Function Groups	Number	Function
Flip- D-type Flops	DN74LS74A	Dual D-type Positive Edge-Triggered Flip-Flops (with Set and Reset)
	DN74LS173	4-bit D-type Registers (with 3-state Outputs)
	DN74LS174	Hex D-type Flip-Flops (with Reset)
	DN74LS175	Quad D-type Flip-Flops (with Reset)
BCD to Decimal Decoder	DN74LS42	BCD to Decimal Decoders
	DN74LS145	BCD to Decimal Decoders/Drivers
Decoder/ Demultiplexer	DN74LS138	3-line to 8-line Decoders/Demultiplexers
	DN74LS139	Dual 2-line to 4-line Decoders/Demultiplexers
	DN74LS155	Dual 2-line to 4-line Decoders/Demultiplexers
	DN74LS156	Dual 2-line to 4-line Decoders/Demultiplexers (with Open Collector Outputs)
Selectors/ Multiplexers	DN74LS151	8-line to 1-line Data Selectors/Multiplexers
	DN74LS153	Dual 4-line to 1-line Data Selectors/Multiplexers
	DN74LS157	Quad 2-line to 1-line Data Selectors/Multiplexers
	DN74LS158	Quad 2-line to 1-line Data Selectors/Multiplexers
	DN74LS251	8-line to 1-line Data Selectors/Multiplexers (with 3-state Outputs)
	DN74LS253	Dual 4-line to 1-line Data Selectors/Multiplexers (with 3-state Outputs)
	DN74LS257A	Quad 2-line to 1-line Data Selectors/Multiplexers (with 3-state Outputs)
	DN74LS258A	Quad 2-line to 1-line Data Selectors/Multiplexers (with 3-state Outputs)
Counters	DN74LS90	Decade Counters
	DN74LS92	Divide-by-Twelve Counters
	DN74LS93	4-bit Binary Counters
	DN74LS160A	Synchronous Decade Counters
	DN74LS161A	Synchronous 4-bit Binary Counters
	DN74LS162A	Synchronous Decade Counters
	DN74LS163A	Synchronous 4-bit Binary Counters
	DN74LS190	Synchronous BCD Up/Down Counters (with Up/Down Mode Control)
	DN74LS191	Synchronous 4-bit Binary Up/Down Counters (with Up/Down Mode Control)
	DN74LS192	Synchronous BCD Up/Down Dual Clock Counters (with Reset)
	DN74LS193	Synchronous 4-bit Binary Up/Down Dual Clock Counters (with Reset)
	DN74LS196	30 MHz Settable Decade Counters/Latches
	DN74LS197	30 MHz Settable Binary Counters/ Latches
	DN74LS290	Decade Counters
	DN74LS293	4-bit Binary Counters
	DN74LS390	Dual Decade Counters
	DN74LS393	Dual 4-bit Binary Counters
	DN74LS490	Dual 4-bit Decade Counters
Registers	DN74LS95B	4-bit Parallel-Access Shift Registers
	DN74LS164	8-bit Parallel-out Serial Shift Registers
	DN74LS170	4-by-4 Register Files (with Open Collector Outputs)
	DN74LS194A	4-bit Bidirectional Universal Shift Registers
	DN74LS195A	4-bit Parallel-Access Shift Registers
	DN74LS395A	4-bit Cascadable Shift Registers (with 3-state Outputs)
Latches	DN74LS75	4-bit Bistable Latches
	DN74LS279	Quad S-R Latches
	DN74LS373	Octal D-type Transparent Latches (with 3-state Outputs)
Adders	DN74LS83A	4-bit Binary Full Adders (with Fast Carry)
	DN74LS283	4-bit Binary Full Adders (with Fast Carry)
Comparators	DN74LS85	4-bit Magnitude Comparator
Monostable Multivibrator	DN74LS123	Dual Retriggerable Monostable Multivibrators (with Reset)
Bus Transceivers	DN74LS245	Octal Bus Transceivers (with 3-state Outputs)

© IC MASTER 1984

Panasonic® PANASONIC INDUSTRIAL COMPANY
Division of Matsushita Electric Corporation of America / Electronic Components Division
One Panasonic Way, Secaucus, N.J. 07094 • Tel: (201) 348-5269 • TWX: 710-992-8920

CMOS Logic IC MN4000B Series

Group	Type No.	Function
NAND Gates	MN4011B	Quad 2-input NAND Gates
	MN4012B	Dual 4-input NAND Gates
	MN4023B	Triple 3-input NAND Gates
AND Gates	MN4073B	Triple 3-input AND Gates
	MN4081B	Quad 2-input AND Gates
NOR Gates	MN4001B	Quad 2-input NOR Gates
	MN4002B	Dual 4-input NOR Gates
	MN4025B	Triple 3-input NOR Gates
	MN4078B	8-input NOR Gates
OR Gates	MN4071B	Quad 2-input OR Gates
	MN4072B	Dual 4-input OR Gates
	MN4075B	Triple 3-input OR Gates
Inverters and Buffers	MN4049B	Hex Inverting Buffers
	MN4050B	Hex Non-inverting Buffers
	MN4069UB	Hex Inverters
	MN4503B	Hex Non-inverting 3-state Buffers
Complex Gates	MN4030B	Quad Exclusive-OR Gates
	MN4070B	Quad Exclusive-OR Gates
	MN4085B	Dual 2-wide 2-input AND-OR-Invert Gates
Flip-Flops	MN4013B	Dual D Flip-Flops
	MN4027B	Dual J-K Flip-Flops
	MN4076B	Quad D Registers (with 3-state Outputs)
Counters	MN4017B	5-stage Johnson Counters
	MN4024B	7-stage Binary Counters
	MN4029B	4-bit Presettable Up/Down Counters
	MN4040B	12-stage Binary Counters
	MN4516B	Binary Up/Down Counters
	MN4518B	Dual BCD Counters
	MN4520B	Dual Binary Counters
	MN40161B	4-bit Synchronous Binary Counters
Digital Multiplexers	MN4512B	8-channel Data Selectors
	MN4539B	Dual 4-channel Data Selectors/Multiplexers
Analog Switches and Multiplexers/ Demultiplexers	MN4016B	Quad Analog Switches
	MN4052B	Dual 4-channel Analog Multiplexer/Demultiplexers
	MN4053B	Triple 2-channel Analog Multiplexers/Demultiplexers
	MN4066B	Quad Analog Switches
Multivibrator	MN4528B	Dual Monostable Multivibrator
Registers	MN4015B	Dual 4-bit Static Shift Registers
	MN4035B	4-bit Universal Shift Registers
Decoder and Demultiplexer	MN4028B	BCD-to-Decimal Decoder
Schmitt Trigger	MU4093B	Quad 2-input NAND Schmitt-Trigger

© IC MASTER 1984

Panasonic® PANASONIC INDUSTRIAL COMPANY
Division of Matsushita Electric Corporation of America / Electronic Components Division
One Panasonic Way, Secaucus, N.J. 07094 • Tel: (201) 348-5269 • TWX: 710-992-8920

74HC Series Logic

Panasonic 74HC Series

Introducing high-speed CMOS performance with the quality of Panasonic. The 74HC Series combines high noise immunity with low power requirements, for compatibilty with today's advanced all-CMOS systems.

Features

- High speed (V_{DD} = 5V)
- Gate Propagation Time:
  tpd1 = 6 ns (C_L = 50 pF)
  tpd2 = 8 ns (C_L = 50 pF)
- Flip Flop Operating Frequency:
  fmax = 60 MHz typ. (C_L = 50 pF)
- Wide Operating Voltage Range:
  1.4 to 6.0V
- Low Noise
- Low Power Consumption:
  1.5 mW/gate (V_{DD} = 5V, fi = 1 MHz, C_L = 50 pF)
- Wide Operating Temperature Range:
  −40° to 85°C
- Can Directly Drive 10 LSTTL Inputs
- Pin and Function Compatible with 74LS Series and 4000 Series (certain part numbers only) logic families
- Internal electrostatic protection

Comparison Guide

A comparison between the MN74HC00 (Quad 2-Input NAND Gate) and other equivalent function types.

Characteristic	H CMOS	LS TTL	TTL	B-Type CMOS	Conditions
Supply Voltage	1.4 to 6V	5 ± 5% V	5 = 5% V	3 to 15V	—
Power Dissipation (typ)	1 mW/Gate	2 mW/Gate	10 mW/Gate	1 mW/Gate	V_{DD} = 5V, C_1 = 15 pF f_1 = 1 MHz
Quiescent P_D (max)	100 μW/Gate	22 mW/Gate	110 mW/Gate	40 μW/Gate	V_{DD} = 5V, V_1 = V_{SS}
Propagation Delay (typ)	6 ns	6 ns	10 ns	50 ~ 100 ns	V_{DD} = 5V, C_L = 15 pF
Output Drive Current	4 mA	8 mA	16 mA	0.36 mA	V_{DD} = 5V
Noise Margin	1V	0.4V	0.4V	1V	V_{DD} = 5V
Operating Temperature	−40 to +85°C	0 to +70°C	0 to +70°C	−40 to +85°C	—

Part Numbering System

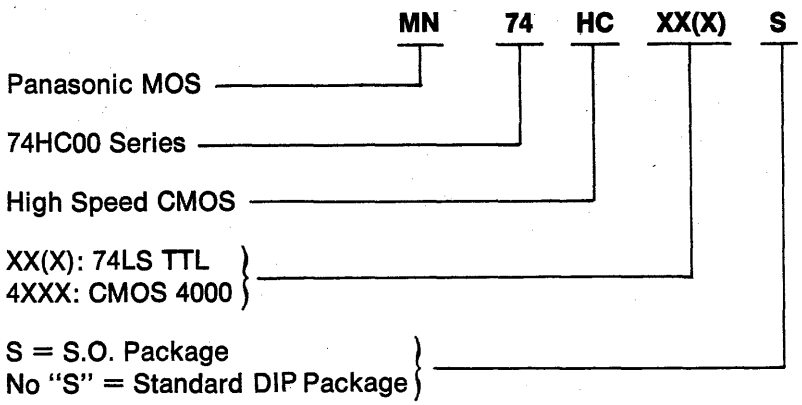

DIGITAL

Panasonic

© IC MASTER 1984

Panasonic® PANASONIC INDUSTRIAL COMPANY
Division of Matsushita Electric Corporation of America / Electronic Components Division
One Panasonic Way, Secaucus, N.J. 07094 • Tel: (201) 348-5269 • TWX: 710-992-8920

74HC Series Logic

Part No.	Function	Pins
MN74HC00/S	Quad 2-Input NAND Gates	14
MN74HC02/S	Quad 2-Input NOR Gates	14
MN74HC04/S	Hex Inverters	14
MN74HC08/S	Quad 2-Input AND Gates	14
MN74HC10/S	Triple 3-Input NAND Gates	14
MN74HC11/S	Triple 3-Input AND Gates	14
MN74HC14/S	Hex Inverting Schmitt Triggers	14
o MN74HC20/S	Dual 4-Input NAND Gates	14
o MN74HC21/S	Dual 4-Input AND Gates	14
MN74HC27/S	Triple 3-Input NOR Gates	14
o MN74HC30/S	8-Input NAND Gates	14
MN74HC32/S	Quad 2-Input OR Gates	14
△ MN74HC42/S	BCD-to-Decimal Decoder	16
o MN74HC51/S	Dual-AND-OR Invert Gates	14
o MN74HC74/S	Dual D-Type Flip-Flops with Preset and Clear	14
△ MN74HC75/S	4-Bit Bistable Latch with Q and Q Output	16
△ MN74HC76/S	Dual J-K Flip-Flops with Preset and Clear	16
△ MN74HC85/S	4-Bit Magnitude Comparator	16
△ MN74HC86/S	Quad 2-Input Exclusive-OR (XOR) Gates	14
o MN74HC107/S	Dual J-K Flip-Flops with Clear	14
△ MN74HC109/S	Dual J-K Flip-Flops with Preset and Clear	16
△ MN74HC112/S	Dual J-K Flip-Flops with Preset and Clear	16
△ MN74HC123/S	Dual Retriggerable Monostable Multivibrators	16
MN74HC133/S	13-Input NAND Gates	16
o MN74HC138/S	3-to-8 Line Decoder	16
MN74HC139/S	Dual 2-to-4 Line Decoders	16
△ MN74HC151/S	8-Channel Digital Multiplexer	16
△ MN74HC154/S	4-to-16 Line Decoder	24
o MN74HC157/S	Quad 2-Input Multiplexers	16
o MN74HC158/S	Quad 2-Input Multiplexers (Inverted Output)	16
o MN74HC160/S	Synchronous Decade Counter with Asynchronous Clear	16
o MN74HC161/S	Synchronous Binary Counter with Asynchronous Clear	16
△ MN74HC161/S	Synchronous Decade Counter	16

Products without a symbol are available now.
Products with a "o" will be available Fall, 1983.
Products with a "△" will be available 1984.

© IC MASTER 1984

Panasonic® PANASONIC INDUSTRIAL COMPANY
Division of Matsushita Electric Corporation of America / Electronic Components Division
One Panasonic Way, Secaucus, N.J. 07094 • Tel: (201) 348-5269 • TWX: 710-992-8920

74HC Series Logic

Part No.	Function	Pins
△ MN74HC163/S	Synchronous Binary Counter	16
MN74HC174/S	Hex D-Type Flip-Flops with Clear	16
o MN74HC175/S	Quad D-Type Flip-Flops with Clear	16
△ MN74HC192/S	Synchronous Decade Up/Down Counter	16
△ MN74HC193/S	Synchronous Binary Up/Down Counter	16
△ MN74HC221/S	Dual Monostable Multivibrators	16
o MN74HC240/S	Inverting Octal TRI-STATE Buffers	20
o MN74HC241/S	Octal TRI-STATE Buffers	20
o MN74HC242/S	Inverting Quad TRI-STATE Transceivers	14
o MN74HC243/S	Quad TRI-STATE Transceivers	14
o MN74HC244/S	Octal TRI-STATE Buffers	20
o MN74HC245/S	Octal TRI-STATE Transceivers	20
△ MN74HC266/S	Quad 2-Input Exclusive NOR (XNOR) Gates	14
o MN74HC273/S	Octal D-Type Flip-Flops with Clear	20
△ MN74HC280/S	9-Bit Odd/Even Parity Generator/Checker	14
o MN74HC365/S	Hex TRI-STATE Buffers	16
MN74HC366/S	Inverting Hex TRI-STATE Buffers	16
MN74HC367/S	Hex TRI-STATE Buffers	16
MN74HC368/S	Inverting Hex TRI-STATE Buffers	16
o MN74HC373/S	Octal TRI-STATE D-Type Latches	20
o MN74HC374/S	Octal TRI-STATE D-Type Flip-Flops	20
o MN74HC390/S	Dual 4-Bit Decade Counters	16
o MN74HC393/S	Dual 4-Bit Binary Counters	14
MN74HC4002/S	Dual 4-Input NOR Gates	14
△ MN74HC4040/S	12-Stage Binary Counter	16
o MN74HC4049/S	Hex Inverting Logic Level Down Converters	16
MN74HC4050/S	Hex Logic Level Down Converters	16
△ MN74HC4051/S	Single 8-Channel Multiplexer/Demultiplexer	16
△ MN74HC4052/S	Differential 4-Channel Multiplexers/Demultiplexers	16
△ MN74HC4053/S	Triple 2-Channel Multiplexers/Demultiplexers	16
△ MN74HC4066/S	Quad Bilateral Switch	14
△ MN74HC4067/S	Single 16-Channel Multiplexer/Demultiplexer	24
o MN74HC4075/S	Triple 3-Input OR Gates	14
MN74HC4078/S	8-Input NOR Gates	14

Products without a symbol are available now.
Products with a "o" will be available Fall, 1983.
Products with a "△" will be available 1984.

© IC MASTER 1984

74HC Series Logic

AC Characteristics (V_{DD} = 5V, V_{SS} = 0V, Ta = 25°C, Input Transition Time ≦6 ns, C_L = 50 pF)

Characteristic	Symbol	Conditions	Min.	Typ.	Max.	Units
Output Rise Time	t_{TLH}			8	15	ns
Output Fall Time	t_{THL}			6	15	ns
Propagation Delay	t_{pLH}	gate, input → output		8	15	ns
L → H		flip-flop, CP → O, O		15	30	ns
Propagation Delay	t_{pHL}	gate, input → output		6	15	ns
H → L		flip-flop, CP → O, O		15	30	ns
Maximum Operating Frequency	f_{max}		25	50		MHz

MN74HC Typical Operating Characteristics MN74HC (Quad 2-Input NAND Gate)

I_D — V_{DS} (P-channel)

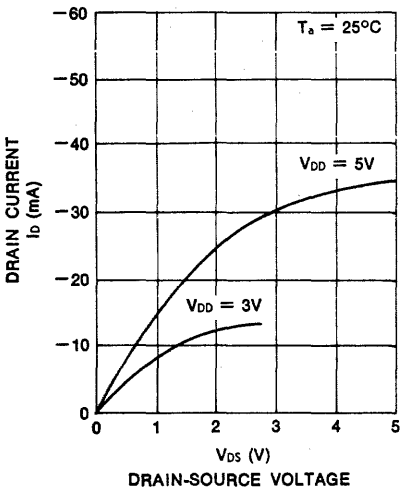

I_D — V_{DS} (N-channel)

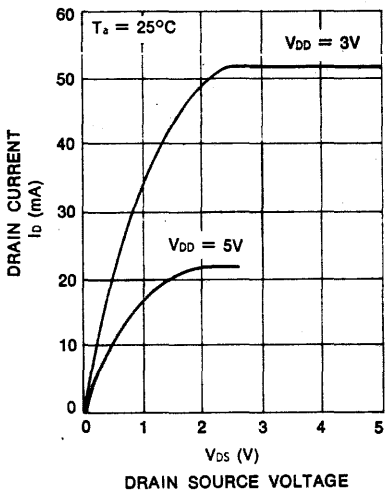

Switching Characteristics

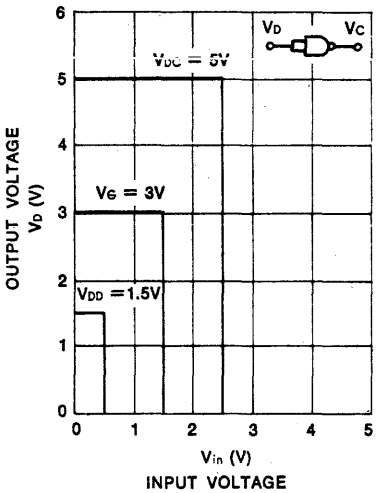

Switching Characteristics

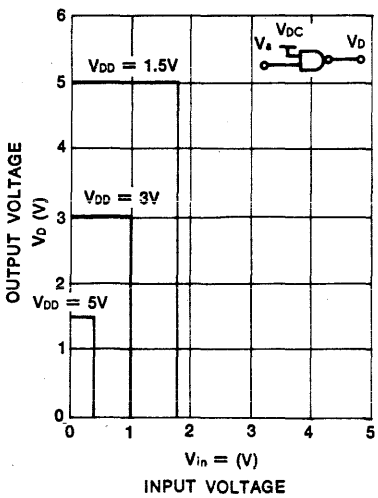

Propagative Delay vs Load Cap.

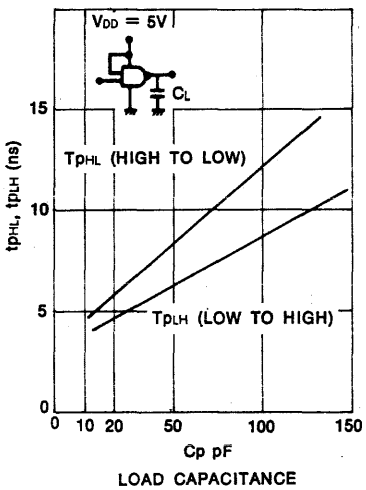

Supply Current vs Frequency

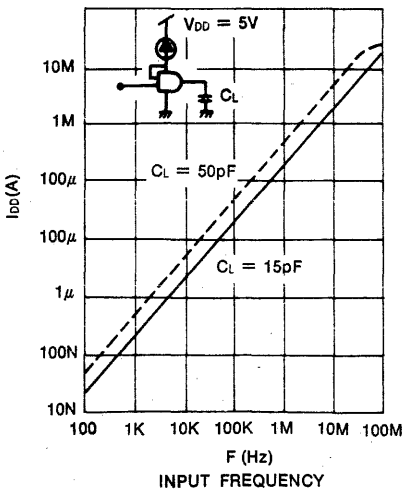

© IC MASTER 1984

74HC Series Logic

Maximum Ratings

Characteristics	Symbol	Limits		Units
Supply Voltage	V_{DD}	−0.5 to +7		V
Supply Current	I_{DD}, I_{SS}	±50		mA
Input, Output, Voltage Range	V_I, V_O	−0.5 to V_{PP} +0.5		V
Input Current Range	I_I	±20		mA
Output Current Range	I_O	±25		mA
Power Dissipation	PD	Ta = −40 to +60°C	400*	mW
		Ta = +60 to +85°C	**8 mW/°C degradation until 200 mW is reached	
Storage Temperature	T_{stg}	−65 to +150		°C

Note: Ratings for "S.O." = *275, **3.8mm

Recommended Operating Conditions

Characteristics	Symbol	Limits	Units
Supply Voltage	V_{DD}	1.4 to 6.0	V
Input Voltage	V_I	0 to V_{PP}	V
Operating Temperature	T_{opr}	−40 to +85	°C

DC Characteristics (V_{DD} = 5V ±10%, V_{SS} = 0V)

Characteristics	Symbol	Conditions		Ta = −40°C		Ta = +25°C		Ta = +85°C		Units
				Min.	Max.	Min.	Max.	Min.	Max.	
Quiescent Current	I_{DD}	$V_I = V_{DD}$ or V_{SS}	Gate		2		2		20	μA
			Buffer Flip-flop		4		4		40	
			MSI		8		8		80	
Input Voltage (High)	V_{IH}	$V_O = V_{DD} - 1.0V$ or 0.5V $I_O \leqq 1\ \mu A$		V_{DD} −1.4		V_{DD} −1.4		V_{DD} −1.4		V
Input Voltage (Low)	V_{IL}	$V_O = V_{DD} - 1.0V$ or 0.5V $I_O \leqq 1\ \mu A$			0.9		0.9		0.9	V
Input Current	$\pm I_I$	$V_I = V_{DD}$ or V_{SS}			0.3		0.3		1	μA
Output Voltage (High)	V_{OH}	$V_I = V_{DD}$ or V_{SS} $I_O \leqq 1\ \mu A$		V_{DD} −0.05		V_{DD} −0.05		V_{DD} −0.05		V
Output Voltage (Low)	V_{OL}	$V_I = V_{DD}$ or V_{SS} $I_O \leqq 1\ \mu A$			0.05		0.05		0.05	V
Output Current (High)	I_{OH}	$V_I = V_{DD}$ or V_{SS} $V_O = V_{DD} - 0.8V$	Standard	−6		−5		−4		mA
			Bus Driver	−9		−7.5		−6		
Output Current (Low)	I_{OL}	$V_I = V_{DD}$ or V_{SS} $V_O = 0.4V$	Standard	6		5		4		mA
			Bus Driver	9		7.5		6		
Output Leakage Current	$\pm I_{OZ}$	3 — State Output $V_O = V_{DD}$ or V_{SS}			0.4		0.4		1	μA

DIGITAL

Panasonic

© IC MASTER 1984

Panasonic® PANASONIC INDUSTRIAL COMPANY
Division of Matsushita Electric Corporation of America / Electronic Components Division
One Panasonic Way, Secaucus, N.J. 07094 • Tel: (201) 348-5269 • TWX: 710-992-8920

Bipolar Digital IC LS-TTL DN74LS (Small Outline Package)

Number		Function Groups	Function
Gate	NAND	DN74LS00S	Quad 2-input Positive NAND Gates
		DN74LS01S	Quad 2-input Positive NAND Gates (with Open Collector Outputs)
		DN74LS03S	Quad 2-input Positive NAND Gates (with Open Collector Outputs)
		DN74LS10S	Triple 3-input Positive NAND Gates
		DN74LS12S	Triple 3-input Positive NAND Gates (with Open Collector Outputs)
		DN74LS20S	Dual 4-input Positive NAND Gates
		DN74LS22S	Dual 4-input Positive NAND Gates (with Open Collector Outputs)
		DN74LS26S	Quad 2-input High-Voltage Interface Positive NAND Gates
		DN74LS30S	8-input Positive NAND Gates
	AND	DN74LS08S	Quad 2-input Positive AND Gates
		DN74LS09S	Quad 2-input Positive AND Gates (with Open Collector Outputs)
		DN74LS11S	Triple 3-input Positive AND Gates
		DN74LS15S	Triple 3-input Positive AND Gates (with Open Collector Outputs)
		DN74LS21S	Dual 4-input Positive AND Gates
	NOR	DN74LS02S	Quad 2-input Positive NOR Gates
		DN74LS27S	Triple 3-input Positive NOR Gates
		DN74LS260S	Dual 5-input Positive NOR Gates
	OR	DN74LS32S	Quad 2-input Positive OR Gates
	Exclusive OR	DN74LS86S	Quad 2-input Exclusive OR Gates
		DN74LS136S	Quad 2-input Exclusive OR Gates (with Open Collector Outputs)
		DN74LS386S	Quad 2-input Exclusive OR Gates
	Exclusive NOR	DN74LS266S	Quad 2-input Exclusive NOR Gates (with Open Collector Outputs)
	Schmitt Triggers	DN74LS13S	Dual 4-input Positive NAND Schmitt-Triggers
		DN74LS14S	Hex Schmitt-Trigger Inverters
		DN74LS132S	Quad 2-input Positive NAND Schmitt-Triggers
	AND OR INVERT	DN74LS51S	2-wide 3-input, 2-wide 2-input AND-OR-INVERT Gates
		DN74LS54S	4-wide AND-OR-INVERT Gates
		DN74LS55S	2-wide 4-input AND-OR-INVERT Gates
Inverters		DN74LS04S	Hex Inverters
		DN74LS05S	Hex Inverters (with Open Collector Outputs)
Buffers	NAND	DN74LS37S	Quad 2-input Positive NAND Buffers
		DN74LS38S	Quad 2-input Positive NAND Buffers (with Open Collector Outputs)
		DN74LS40S	Dual 4-input Positive NAND Buffers
	NOR	DN74LS28S	Quad 2-input Positive NOR Buffers
		DN74LS33S	Quad 2-input Positive NOR Buffers (with Open Collector Outputs)
Bus Buffers/Drivers		DN74LS125AS	Quad Bus Buffer Gates (with 3-state Outputs)
		DN74LS240S	Octal Buffers AND Line Drivers (with 3-state Outputs)
		DN74LS241S	Octal Buffers AND Line Drivers (with 3-state Outputs)
		DN74LS244S	Octal Buffers AND Line Drivers (with 3-state Outputs)
Drivers		DN74LS365AS	Hex Bus Drivers (with 3-state Outputs)
		DN74LS366AS	Hex Bus Drivers (with 3-state Outputs)
		DN74LS367AS	Hex Bus Drivers (with 3-state Outputs)
		DN74LS368AS	Hex Bus Drivers (with 3-state Outputs)
Flip-Flops	J-K	DN74LS73S	Dual J-K Flip-Flops (with Reset)
		DN74LS76S	Dual J-K Flip-Flops (with Set and Reset)
		DN74LS78S	Dual J-K Flip-Flops (with set, Common Reset and Common Clock)
		DN74LS107S	Dual J-K Flip-Flops (with Reset)
		DN74LS109S	Dual J-K Positive Edge-Triggered Flip-Flops (with Set and Reset)
		DN74LS112S	Dual J-K Negative Edge-Triggered Flip-Flops (with Set and Reset)
		DN74LS113S	Dual J-K Negative Edge-Triggered Flip-Flops (with Set)
		DN74LS114S	Dual J-K Negative Edge-Triggered Flip-Flops (with Set, Common Reset and Common Clock)
Flip-Flops	D-type	DN74LS74AS	Dual D-type Positive Edge-Triggered Flip-Flops (with Set and Reset)
		DN74LS173S	4-bit D-type Registers (with 3-state Outputs)
		DN74LS174S	Hex D-type Flip-Flops (with Reset)
		DN74LS175S	Quad D-type Flip-Flops (with Reset)
BCD to Decimal Decoder		DN74LS42S	BCD to Decimal Decoders
		DN74LS145S	BCD to Decimal Decoders/Drivers
Decoder/Demultiplexer		DN74LS138S	3-line to 8-line Decoders/Demultiplexers
		DN74LS139S	Dual 2-line to 4-line Decoders/Demultiplexers
		DN74LS155S	Dual 2-line to 4-line Decoders/Demultiplexers
		DN74LS156S	Dual 2-line to 4-line Decoders/Demultiplexers (with Open Collector Outputs)
Selectors/Multiplexers		DN74LS151S	8-line to 1-line Data Selectors/Multiplexers
		DN74LS153S	Dual 4-line to 1-line Data Selectors/Multiplexers
		DN74LS157S	Quad 2-line to 1-line Data Selectors/Multiplexers
		DN74LS158S	Quad 2-line to 1-line Data Selectors/Multiplexers
		DN74LS251S	8-line to 1-line Data Selectors/Multiplexers (with 3-state Outputs)
		DN74LS253S	Dual 4-line to 1-line Data Selectors/Multiplexers (with 3-state Outputs)
		DN74LS257AS	Quad 2-line to 1-line Data Selectors/Multiplexers (with 3-state Outputs)
		DN74LS258AS	Quad 2-line to 1-line Data Selectors/Multiplexers (with 3-state Outputs)

© IC MASTER 1984

Panasonic® PANASONIC INDUSTRIAL COMPANY
Division of Matsushita Electric Corporation of America / Electronic Components Division
One Panasonic Way, Secaucus, N.J. 07094 • Tel: (201) 348-5269 • TWX: 710-992-8920

Bipolar Digital IC LS-TTL DN74LS (Small Outline Package)

Number	Function Groups	Function
Counters	DN74LS90S	Decade Counters
	DN74LS92S	Divide-by-Twelve Counters
	DN74LS93S	4-bit Binary Counters
	DN74LS160AS	Synchronous Decade Counters
	DN74LS161AS	Synchronous 4-bit Binary Counters
	DN74LS162AS	Synchronous Decade Counters
	DN74LS163AS	Synchronous 4-bit Binary Counters
	DN74LS190S	Synchronous BCD Up/Down Counters (with Up/Down Mode Control)
	DN74LS191S	Synchronous 4-bit Binary Up/Down Counters (with Up/Down Mode Control)
	DN74LS192S	Synchronous BCD Up/Down Dual Clock Counters (with Reset)
	DN74LS193S	Synchronous 4-bit Binary Up/Down Dual Clock Counters (with Reset)
	DN74LS196S	30 MHz Settable Decade Counters/Latches
	DN74LS197S	30 MHz Settable Binary Counters/Latches
	DN74LS290S	Decade Counters
	DN74LS293S	4-bit Binary Counters
	DN74LS390S	Dual Decade Counters
	DN74LS393S	Dual 4-bit Binary Counters
	DN74LS490S	Dual 4-bit Decade Counters
Registers	DN74LS95BS	4-bit Parallel-Access Shift Registers
	DN74LS164S	8-bit Parallel-out Serial Shift Registers
	DN74LS170S	4-by-4 Register Files (with Open Collector Outputs)
	DN74LS194AS	4-bit Bidirectional Univeral Shift Registers
	DN74LS195AS	4-bit Parallel-Access Shift Registers
	DN74LS395AS	4-bit Cascadable Shift Registers (with 3-state Outputs)
Latches	DN74LS75S	4-bit Bistable Latches
	DN74LS279S	Quad S-R Latches
	DN74LS373S	Octal D-type Transparent Latches (with 3-state Outputs)
Adders	DN74LS83AS	4-bit Binary Full Adders (with Fast Carry)
	DN74LS283S	4-bit Binary Full Adders (with Fast Carry)
Comparators	DN74LS85S	4-bit Magnitude Comparator
Monostable Multivibrator	DN74LS123S	Dual Retriggerable Monostable Multivibrators (with Reset)
Bus Tranceivers	DN74LS245S	Octal Bus Transceivers (with 3-state Outputs)

Type No.	Group	Function
NAND Gates	MN4011BS	Quad 2-input NAND Gates
	MN4012BS	Dual 4-input NAND Gates
	MN4023BS	Triple 3-input NAND Gates
AND Gates	MN4073BS	Triple 3-input AND Gates
	MN4081BS	Quad 2-input AND Gates
NOR Gates	MN4001BS	Quad 2-input NOR Gates
	MN4002BS	Dual 4-input NOR Gates
	MN4025BS	Triple 3-input NOR Gates
	MN4078BS	8-input NOR Gates
OR Gates	MN4071BS	Quad 2-input OR Gates
	MN4072BS	Dual 4-input OR Gates
	MN4075BS	Triple 3-input OR Gates
Inverters and Buffers	MN4049BS	Hex Inverting Buffers
	MN4050BS	Hex Non-Inverting Buffers
	MN4069UBS	Hex Inverter
	MN4503BS	Hex Non-Inverting 3-state Buffers
Complex Gates	MN4030BS	Quad Exclusive-OR Gates
	MN4070BS	Quad Exclusive-OR Gates
	MN4085BS	Dual 2-wide 2-input AND-OR-Invert Gates
Flip-Flops	MN4013BS	Dual D Flip-Flop
	MN4027BS	Dual J-K Flip-Flops
	MN4076BS	Quad D Register with 3-state Output
Counters	MN4017BS	5-stage Johnson Counters
	MN4024BS	7-stage Binary Counters
	MN4029BS	4-bit Presettable Up/Down Counters
	MN4040BS	12-stage Binary Counters
	MN4516BS	Binary Up/Down Counters
	MN4518BS	Dual BCD Counters
	MN4520BS	Dual Binary Counters
	MN40161BS	4-bit Synchronous Binary Counters
Digital Multiplexers	MN4512BS	8-channel Data Selector
	MN4539BS	Dual 4-channel Data Selector/Multiplexer
Analog Switches and Multiplexers/Demultiplexers	MN4016BS	Quad Analog Switches
	MN4052BS	Dual 4-channel Analog Multiplexer/Demultiplexer
	MN4053BS	Triple 2-Channel Analog Multiplexer/Demultiplexer
	MN4066BS	Quad Analog Switches
Multivibrator	MN4528BS	Dual Monostable Multivibrator
Registers	MN4015BS	Dual 4-bit Static Shift Registers
	MN4035BS	4-bit Universal Shift Registers
Decoder and Demultiplexer	MN4028BS	BCD-to-Decimal Decoder
Schmitt Trigger	MN4093BS	Quad 2-input NAND Schmitt Trigger

CMOS Digital Integrated Circuits

The RCA CMOS product line covers a broad range of SSI, MSI, and LSI functions from simple gates to complex counters, registers, telecommunications and arithmetic circuits, and includes both standard-circuit types for industrial and commercial applications and high-reliability types for aerospace, military, and critical industrial applications. These types are available in a wide variety of packages, including ceramic and plastic dual-in-line packages and ceramic flat packages, and are also available with burn-in for applications requiring reliability beyond that of standard commercial product.

High-Voltage "B" Series

RCA offers a comprehensive line of high-voltage ("B"-series) CMOS digital integrated circuits which meet in all respects the industry standard specifications established by JEDEC. In a number of important respects, however, RCA CMOS B-series types establish new performance standards for B-series CMOS circuits:

- Tight performance limits for all packages. Because RCA supplies only one premium grade of B-series product in all packages styles (i.e., fall-out chips are not used), all B-series CMOS devices are specified to the tight JEDEC limits only.
- Improved voltage rating. All B-series CMOS devices are tested to voltages that ensure safe operation at the absolute maximum dc supply voltage rating of 20 V
- Wider operating-voltage range. All RCA B-series devices have a recommended maximum operating voltage of 18 V
- Lower leakage current. For all 3 levels of I_{DD} limits established by JEDEC, all RCA B-series devices (regardless of package) conform to the tighter set of limits established in the standard
- Symmetrical output. All RCA B-series devices except for types having special design requirements have balanced complementary output drive (i.e., the output high-level current rating is the same as the output low-level current rating) specified to the tighter set of limits established by JEDEC
- Improved input current (leakage) ratings. All RCA B-series devices (regardless of package) have a maximum input leakage current rating of 100 nA at 18 V and 25°C, and 1 μA at 18 V over the full package-temperature range.
- All inputs protected by CMOS protection circuits
- Buffered and unbuffered gates. "UB"-suffix CMOS types meet all B-series specifications except that the logical outputs are not buffered and V_{IL} and V_{IH} specifications are 20% and 80% of V_{DD}, ("B" types are 30% and 70% of V_{DD}) respectively. All B-suffix types are buffered output devices; V_{IL} and V_{IH} are 30% and 70% of V_{DD} at 5 V and 10 V, and 27% and 73% of V_{DD} at 15 V
- Reliability. RCA B-series CMOS types incorporate the latest improvements in processing technology and packaging techniques; product quality is real-time controlled using accelerated temperature group quality screening.

Standard "A" Series

The CMOS CD4000A-series digital integrated circuits have a maximum dc supply voltage rating of 15 volts, and a recommended operating supply-voltage range of 3 to 12 volts. Major features are:

- Quiescent current specified to 15 V
- 5-V and 10-V parametric ratings
- Maximum input leakage current of 1μA at 15 V over the full package-temperature range
- 1-V noise margin over the full package-temperature range

Special-Purpose Circuits

- Bilaterial switches — for transmission or multiplexing of analog or digital signals
- Phase-locked loop — a versatile building block for micropower digital and analog applications
- Telecommunications circuits — for telephone systems, PBX, studio audio switching, and multisystem bus interconnects

For a summary of available products refer to the CMOS Digital Integrated Circuits product guide COS-278H. For complete technical data refer to the CMOS Integrated Circuits DATABOOK SSD-250B.

© IC MASTER 1984

CMOS Gates

Single-Level

NOR/NAND, OR/AND types for general-logic functions; to provide the system designer with the direct implementation of these functions.

Buffer and Inverter types for pulse-shaping, logic inversion, CMOS-to-DTL/TTL hex converters, multiplexers, high-current-source sink drivers, threshold detectors, linear amplifiers.

- Propagation delay times from 30 to 75 ns (typ.)

Multi-Level

Multifunction AND/OR-Invert for split-phase communications, high-to-low-level converters, even-and-odd parity generators, adders, subtracters, AND/OR select gating, general logic functions.

Decoders/Encoders for code conversion, address decoding, priority encoders, binary or BCD encoders, digital multiplexing, function selectors, floating-point arithmetic and hexadecimal/BCD decoding.

Schmitt triggers for monostable/astable multivibrators, wave and pulse shapers, high-noise-environment systems.

Interface circuits for high or low level-shifting with 3-state outputs, isolation of logic subsystems using separate power supplies from supply sequencing.

- Propagation delay times from 55 to 150 ns (typical)

Function	Type No.	Pins
NOR/NAND		
Dual 4-input NOR	**CD4002B**	14
	CD4002UB	14
	CD4002A	14
Dual 4-input NAND	**CD4012B**	14
	CD4012UB	14
	CD4012A	14
Triple 3-input NOR	**CD4025B**	14
	CD4025UB	14
	CD4025A	14
Triple 3-input NAND	**CD4023B**	14
	CD4023UB	14
	CD4023A	14
Quad 2-input NOR	**CD4001B**	14
	CD4001UB	14
	CD4001A	14
Quad 2-input NAND	**CD4011B**	14
	CD4011UB	14
	CD4011A	14
8-input NOR/OR	**CD4078B**	14
8-input NAND/AND	**CD4068B**	14
Dual 3-input NOR plus inverter	**CD4000B**	14
	CD4000UB	14
	CD4000A	14
Dual 2-input NAND buffer/driver	**CD40107B**	8,14
OR/AND		
Dual 4-input OR	**CD4072B**	14
Dual 4-input AND	**CD4082B**	14
Triple 3-input OR	**CD4075B**	14
Triple 3-input AND	**CD4073B**	14
Quad 2-input OR	**CD4071B**	14
Quad 2-input AND	**CD4081B**	14
Buffers and Inverters		
Dual complementary pair plus inverter	**CD4007UB**	14
	CD4007A	14
Hex inverter	**CD4069UB**	14
Hex 3-State Buffer	**CD4503B**	16
Strobed hex inverter/buffer (3-state outputs)	**CD4502B**	16
Hex buffer/converter (inverting)	**CD4009UB**	16
	CD4009A	16
Hex buffer/converter (inverting)	**CD4049UB**	16
	CD4049A	16
Hex buffer/converter (non-inverting)	**CD4010B**	16
	CD4010A	16
Hex buffer/converter (non-inverting)	**CD4050B**	16
	CD4050A	16

Function	Type No.	Pins
Quad true/complement buffer	**CD4041UB**	14
	CD4041A	14
Dual 2-input NAND buffer/driver	**CD40107B**	8,14
Multifunction/AOI		
Triple AND/OR bi-phase pairs	**CD4037A**	14
Quad exclusive-OR	**CD4030B**	14
	CD4030A	14
Quad exclusive-OR	**CD4070B**	14
Quad exclusive-NOR	**CD4077B**	14
Quad AND/OR Select	**CD4019B**	16
	CD4019A	16
Dual 2-wide, 2-input AND-OR-Invert (AOI)	**CD4085B**	14
Expandable 4-wide, 2-input AND-OR-Invert (AOI)	**CD4086B**	14
Multifunctional expandable 8-input (3-state output)	**CD4048B**	16
	CD4048A	16
Decoders/Encoders		
BCD-to-decimal decoder	**CD4028B**	16
	CD4028A	16
8-input priority encoder	**CD4532B**	16
10-line to 4-line BCD priority encoder	**CD40147B**	16
4-bit latch/4-to-16 line decoder (outputs high)	**CD4514B**	24
4-bit latch/4-to-16 line decoder (outputs low)	**CD4515B**	24
Dual 1-of-4 decoder/demultiplexer (outputs high)	**CD4555B**	16
Dual 1-of-4 decoder/demultiplexer (outputs low)	**CD4556B**	16
Schmitt Trigger		
Quad 2-input NAND	**CD4093B**	14
Hex	**CD40106B**	14
Interface		
Quad low-to-high volt-level shifter	**CD40109B**	16
Hex high-to-low voltage (inverting)	**CD4009UB**	16
	CD4009A	16
	CD4049UB	16
	CD4049A	16
Hex high-to-low voltage (non-inverting)	**CD4010B**	16
	CD4010A	16
	CD4050B	16
	CD4050A	16
High-speed dual 2-input NAND buffer/driver	**CD40107B**	8,14
8-bit Bidirectional CMOS to TTL Level/Converter	**CD40115**	22
	CD40116	22

© IC MASTER 1984

CMOS Multivibrators

For pulse-shaping and timing circuits
- CD4047 for monostable (one-shot) or astable (free-running) operation
- CD4098 for retriggerable/resettable one-shot operation

Flip-flops for registers, counters, control circuits, pattern generators
- Clock rates from 12 to 16 MHz (typical)
- CD4013, CD4027 with set/reset capability
- CD4095, CD4096 with gated input
- CD40174 with 6 identical "D"-type units having independent data inputs
- CD4076 with 3-stage outputs

Latches for buffer storage, holding registers, general digital logic, multiline decoders
- Propagation delay times from 50 to 75 ns (typ.)
- CD4508 has 2 independent 4-bit latches, each with an individual master reset
- CD4099 is suitable for a wide variety of functions

Function	Type No.	Pins
Multivibrators		
Monostable/astable	**CD4047B**	14
	CD4047A	14
Dual monostable	**CD4098B**	16
Dual Precision Monostable Multivibrator	**CD4538B**	16
Flip-Flops		
Dual "D" with set/reset capability	**CD4013B**	14
	CD4013A	14
Dual "J-K" with set/reset capability	**CD4027B**	16
	CD4027A	16
Gated "J-K" (non-inverting)	**CD4095B**	14
Gated "J-K" (inverting and non-inverting)	**CD4096B**	14
Hex "D"	**CD40174B**	16
4-bit "D" with 3-state outputs	**CD4076B**	14
Quad "D" Flip-Flop	**CD40175B**	16
Latches		
Quad clocked "D"	**CD4042B**	16
	CD4042A	16
Quad NOR R/S (3-state outputs)	**CD4043B**	16
	CD4043A	16
Quad NAND R/S (3-state outputs)	**CD4044B**	16
	CD4044A	16
Dual 4-bit	**CD4508B**	24
8-bit addressable	**CD4099B**	16
	CD4724B	16

CMOS Registers

Shift registers for serial shifting, time delay circuits, control circuits, code conversion, serial-to-parallel data conversion
- Clock rates from 5 to 16 MHz (typical)
- Bidirectional types; types with recirculating capability, LIFO or FIFO capability, standard TTL drive capability

Storage Registers
- CD4099 serial input/parallel output type can perform a variety of functions
- CD4076 is a "D"-type flip-flop with 3-state outputs

FIFO Buffer Register for bit rate smoothing

CPU/terminal buffering, data communications, peripheral buffering
- 3-state outputs • Expandable in either direction
- Independent asynchronous inputs and outputs

Function	Type No.	Pins
Shift Registers — Static		
Dual 4-stage with serial input/ parallel output	**CD4015B**	16
	CD4015A	16
18-stage	**CD4006B**	14
	CD4006A	14
64-stage	**CD4031B**	16
	CD4031A	16
Dual 64-bit	**CD4517B**	16
8-stage with synchronous parallel or serial input/serial output	**CD4014B**	16
	CD4014A	16
8-stage with asynchronous parallel input or synchronous serial input/ serial output	**CD4021B**	16
	CD4021A	16
4-stage parallel-in/parallel-out with J-K inputs and true/complement output	**CD4035B**	16
	CD4035A	16
8-stage bidirectional parallel or serial input/parallel output	**CD4034B**	24
	CD4034A	24
4-bit bidirectional left/right	**CD40194B**	16
3-state 4-bit bidirectional left/right	**CD40104B**	16
32-stage left/right	**CD40100B**	16
8-stage shift-and-store bus	**CD4094B**	16
Storage Registers		
8-bit addressable latch	**CD4099B**	16
	CD4724B	16
4-bit "D"-type with 3-state outputs	**CD4076B**	16
4x4 Multiport	**CD40108B**	24
4x4 Multiport	**CD40208B**	24
FIFO Buffer Registers		
4-bit x 16-word	**CD40105B**	16
Timer/Driver		
4x Qaud Precision Timer/Driver	**CD22401**	40

CMOS Counters

A variety of counter circuits for control counters, fixed and programmable frequency division, time-delay circuits, programmable decoders, digital frequency synthesizers, A/D and D/A conversion, divide-by-"N" counters
- Max. input pulse frequencies from 3.6 to 1 MHz
- Fully static operation
- Programmable types:
  CD40160, CD40161 with asynchronous clear input
  CD40162, CD40163 with synchronous clear input
  CD4059 synchronous programmable divide-by-"N"
  CD4018 fixed or programmable

Function	Type No.	Pins
Binary Ripple		
7-stage	**CD4024B**	14
	CD4024A	14
12-stage	**CD4040B**	16
	CD4040A	16

© IC MASTER 1984

CMOS Counters

Function	Type No.	Pins
Binary Ripple (cont'd.)		
14-stage	CD4020B CD4020A	16 16
14-stage counter/divider and oscillator	CD4060B CD4060A	16 16
Synchronous		
Decade counter/divider plus 10 decoded demical ouputs	CD4017B CD4017A	16 16
Divide-by-8 counter/divider with 8 decimal outputs	CD4022B CD4022A	16 16
Presettable divide-by-"N" counter, fixed or programmable	CD4018B CD4018A	16 16
Programmable divide-by-"N" counter	CD4059A	24
Presettable up/down counter, binary or BCD-decade	CD4029B CD4029A	16 16
Presettable 4-bit BCD up/down counter	CD4510B	16
Presettable 4-bit binary up/down counter	CD4516B	16
Presettable 2-decade BCD down counter	CD40102B	16
Presettable 8-bit binary down counter	CD40103B	16
Presettable 4-bit BCD up/down counter (dual clock with reset)	CD40192B	16
Presettable 4-bit binary up/down counter (dual clock with reset)	CD40193B	16
Dual BCD up counter	CD4518B	16
Dual binary up counter	CD4520B	16
Programmable 4-Bit Counters		
Decade counter/asynchronous clear	CD40160B	16
Binary counter/asynchronous clear	CD40161B	16
Decade counter/synchronous clear	CD40162B	16
Binary counter/synchronous clear	CD40163B	16
Timers		
21-stage	CD4045B CD4045A	14 14
Programmable 24-Stage w/Variable Pulse-Width Output	CD4536B	16
Programmable Timer 16-Stage w/Power-On Reset	CD4541B	14

CMOS Display Drivers

A variety of circuits capable of driving LED's and other displays directly: clocks, watches, timers, calculators, meters, industrial and auto control panels. Also for use in general counting applications where display is desired.

- CD4026, CD4033 have counter and 7-segment decoder in one package; easily interfaced with 7-segment display types
- CD40110 has separate clock up and clock down lines; allows one line to be clocked regardless of the state of the other line
- CD4054, CD4055, CD4056 provide level-shifting functions on chip; have equivalent ac output drive, for liquid-crystal displays, no external capacitor required
- CD4511 has high output-sourcing capability, up to 25 mA; also lamp-test and blanking capability

Function With Counter	Type No.	Pins
Decade counter/divider with 7-segment display outputs and display enable	CD4026B CD4026A	16 16
Decade counter/divider with 7-segment display outputs and ripple blanking	CD4033B CD4033A	16 16
Up/Down Counter-Latch-Decoder-Driver	CD40110B	16
BCD-to-7-Segment Latch/Decoder/Driver w/Display Blanking	CD4543B	16
For Liquid-Crystal-Display Drive		
4-segment display driver	CD4054B	16
BCD-to-7-segment decoder/driver with "display-frequency" output	CD4055B	16
BCD-to-7-segment decoder/driver with strobed-latch function	CD4056B	16
28-Segment LCD Decoder/Driver Hexadecimal Display	CD22104 CD22105	40 40
28-Segment LCD Decoder/Driver Decimal Display	CD22104A CD22105A	40 40
For Light-Emitting-Diode Drive		
BCD-to-7-segment latch decoder/driver	CD4511B	16

CMOS Multiplexers

A variety of circuits for analog and digital multiplexing; A/D and D/A conversion; signal gating, decoding, code conversion, true/complement selection

- CD4051, CD4052, CD4053, CD4067, CD4097 have very low quiescent dissipation (0.2 μW typ. at V_{DD} = 10 V) under all digital control input and supply conditions
- CD4051, CD4052, CD4053 have a wide range of digital and analog signal levels: 3 to 20 V digital, 20 Vp-p analog
- CD4067, CD4097 have binary address decoding on chip
- CD4555, CD4556 have 2 select inputs (A and B), an Enable input (E), and 4 mutually exclusive outputs for each decoder
- CD40257 has 3-state outputs which can interface directly with and drive data lines of bus-oriented systems.

Function Analog	Type No.	Pins
Triple 2-channel	CD4053B	16
Differential 4-channel	CD4052B	16
Single 8-channel	CD4051B	16
Differential 8-channel	CD4097B	24
Single 16-channel	CD4067B	24
Quad bilaterial switch	CD4016B CD4016A	14 14
Quad bilateral switch	CD4066B CD4066A	14 14
Digital (Data Selector)		
Quad AND/OR select	CD4019B CD4019A	16 16
Dual 1-of-4 decoder/demultiplexer (outputs high)	CD4555B	16
Dual 1-of-4 decoder/demultiplexer (outputs low)	CD4556B	16
Quad 2-line-to-1-line	CD40257B	16
8-Channel Data Selector (3-State)	CD4512B	16

CMOS Arithmetic Circuits

A wide selection of circuits to provide a variety of logic and arithmetic functions, comparison functions, error detection in computer and industrial control applications

- Propagation delay times from 60 to 100 ns (typical)
- CD40181 generates 16 logic and 16 arithmetic functions
- CD4063 compares two 4-bit words in 250 ns typ. at 10 V; expansion to 8-, 12-, 16-. . . 4N bits by cascading units
- CD40182 generates high-speed carry across 4 adder or adder groups
- CD4032, CD4038 invert inputs provide for complement of sum outputs

Function	Type No.	Pins
Adders/Comparators		
4-bit full adder with parallel carry out	**CD4008B**	16
	CD4008A	16
Triple serial adder, positive logic	**CD4032B**	16
	CD4032A	16
Triple serial adder, negative logic	**CD4038B**	16
	CD4038A	16
4-bit magnitude comparator	**CD4063B**	16
	CD4585B	16
Quad exclusive-OR gate	**CD4030B**	14
	CD4030A	14
Quad exclusive-OR gate	**CD4070B**	14
Quad exclusive-NOR gate	**CD4077B**	14
ALU/Rate Multipliers		
4-bit arithmetic logic unit	**CD40181B**	24
	CD4057A	28
BCD rate multiplier	**CD4527B**	16
Binary rate multiplier	**CD4089B**	16
Look-ahead-carry block	**CD40182B**	16
Parity Generator/Checker		
9-bit	**CD40101B**	14
Multiport Register		
4x4	**CD40108B**	24
4x4	**CD40208B**	24
8x1	**CD4034B**	24
8x1	**CD4034A**	24
Bus Terminator		
8-bit	**CD40117B**	14

CMOS Bilateral Switches

- CD4066 is pin-compatible with CD4016 but exhibits a much lower ON resistance
- CD4016 R_{ON} is matched to within 10 ohms, CD4066 R_{ON} to within 5 ohms
- CD4016 is recommended for sample-and-hold use

Function	Type No.	Pins
For transmission or multiplexing of analog or digital signals	**CD4016B**	14
	CD4016A	14
	CD4066B	14
	CD4066A	14

CMOS Phase-Locked Loop

- Very low power consumption: 70 μW typical at V_{DD} = 10 V
- Max. operating-frequency range up to 1.2 MHz typical at V_{DD} = 10 V
- Low frequency drift: ±0.06%/°C

Micropower	**CD4046B**	16
	CD4046A	16

CMOS Telecommunications Circuits

- Matched switch characteristics (ΔR_{ON}) at 12 V: 18 ohms for CD22100; 5 ohms for CD22101, CD22102
- Low ON resistance for all types: 75 ohms (typical) at 12 V
- 10-MHz switch bandwidth

Function	Type No.	Pins
4x4 Array Crosspoint Switch w/Control Memory	**CD22100**	16
4x4x2 Array Crosspoint Switch w/Control Memory	**CD22101**	24
4x4x2 Array Crosspoint Swtich w/Control Memory	**CD22102**	24
HDB-3 Digital Transcoder	**CD22103**	16
T-1 Repeater	**CD22301**	16
Single Chip CODEC Filter	**CD22302**	16
Filter: Bandpass Transmit/ Low Pass Receive	**CD22413A**	16
Filter Low Pass Transmit/Receive	**CD22414A**	16
DTMF Touch-Tone Encoder	**CD22859**	16

© IC MASTER 1984

QMOS Integrated Circuits

The RCA QMOS series of high-speed CMOS logic integrated circuits include an extensive line of products that are pin compatible with many existing bipolar 54/74LSTTL and CMOS 4000 series of digital logic types. The new QMOS IC's provide high-speed CMOS replacements for the most popular LSTTL devices in existing designs and also offer low-power all-CMOS designs for new digital systems. Key family features of the RCA QMOS types include:

- Speeds equivalent to LSTTL types with typical gate delays of 10 ns, 8 ns at C_L = 15 pF
- Fanout to 10 74 LSTTL loads; 15 loads using Bus Driver 74 types.
- Operating frequencies equivalent to LSTTL types, typically 30 MHz.
- The high voltage noise immunity characteristic of CMOS, typically 45 percent of V_{CC}, a two to three times improvement over LSTTL.
- Wide range of power supply operating voltages, 2 to 6 volts.
- CMOS low static power consumption, typically less than 1 microwatt.

With the broad line of CMOS MSI function types currently available, together with performance offered by the RCA QMOS series of high-speed CMOS integrated circuits, the designer need not sacrifice speed for power consumption. Add the other classical advantages of CMOS, including high noise immunity and wide power supply and temperature ranges, and the decision to use high-speed CMOS logic (QMOS) is the logical choice. This new family provides for the design of more cost-effective systems to serve high-speed market applications.

The RCA QMOS product line consists primarily of CD54/74HC-series types, which feature CMOS input voltage level compatibility, and CD54/74HCT-series types, which are input voltage level compatible with LSTTL devices. The QMOS line also includes a limited number of single-stage, unbuffered inverter types (CD54/74HCU-series) for added versatility in oscillator and amplifier applications. The following paragraphs outline some key advantages that QMOS IC's offer over standard CMOS and LSTTL types:

Power Consumption

CMOS is well established in the marketplace as the leading technology for applications in which low power consumption is a prime requisite. Relative to LSTTL, CMOS IC's feature low static power dissipation. In comparison to 54/74-series LSTTL types, RCA QMOS devices enhance system reliability and reduce costs by reducing or eliminating, the number and size of parts such as heat sinks, fans, tightly regulated high current power supplies, and copper busses. A typical system in which LSTTL types have been replaced by equivalent QMOS types can be expected to operate with only 1% of the power of the LSTTL system.

Noise Immunity Consideration

The noise immunity of a logic family is also an important equipment cost factor in terms of decoupling components, power supply dynamic resistance and regulation, and layout rules for PC boards and signal cables. A true system assessment of noise immunity is the noise margin provided by a logic family. The QMOS CD74HC series has a 2:1 system noise margin over the 74LSTTL series. The system noise margin of CD74HCT series is similar to that of 74LSTTL series.

AC Performance

In comparsion to standard CD4000 Series CMOS, LSTTL types provide higher operating frequencies as well as considerably shorter propagation delays. The RCA QMOS high-speed logic series is designed to meet the dynamic switching speeds and operating frequency of LSTTL.

Output Drives

A prominent characteristic fo LSTTL is its restrictive output drive capacity, or fanout rules. Each basic logic type in the RCA QMOS High-Speed CMOS series is capable of driving a full complement of 10 LSTTL loads (4mA at 0.4 V). An additional factor of 50% was applied to parts in the octal grouping for a total bus driving capability of 6 mA or a fanout of 15 LSTTL loads. These improved drive capabilities are achieved without sacrifice of the power, speed, and noise immunity benefits of the CMOS family. For driving QMOS loads, a fanout of 20 at high noise margin is specified. This fanout capability is twice that of standard 74LSTTL.

For a complete summary of all available High-Speed CMOS Logic devices see RCA Databook SSD-290 "The QMOS Product Line."

Index to Devices

CMOS Logic		TTL Logic			
Plastic Pkg.	CERDIP	Plastic Pkg.	CERDIP	Description	Pins
CD74HC00E	CD54HC00F	CD74HCT00E	CD54HCT00F	Quad 2-Input NAND Gate	14
CD74HC02E	CD54HC02F	CD74HCT02E	CD54HCT02F	Quad 2-Input NOR Gate	14
*CD74HC04E	*CD54HC04F	CD74HCT04E	CD54HCT04F	Hex Inverter	14
CD74HC08E	CD54HC08F	CD74HCT08E	CD54HCT08F	Quad 2-Input AND Gate	14
CD74HC10E	CD54HC10F	CD74HCT10E	CD54HCT10F	Triple 3-Input NAND Gate	14
CD74HC11E	CD54HC11F	CD74HCT11E	CD54HCT11F	Triple 3-Input AND Gate	14
CD74HC14E	CD54HC14F	CD74HCT14E	CD54HCT14F	Hex Inverting Schmitt Trigger	14
CD74HC20E	CD54HC20F	CD74HCT20E	CD54HCT20F	Dual 4-Input NAND Gate	14
CD74HC27E	CD54HC27F	CD74HCT27E	CD54HCT27F	Triple 3-Input NOR Gate	14
CD74HC32E	CD54HC32F	CD74HCT32E	CD54HCT32F	Quad 2-Input OR Gate	14
CD74HC42E	CD54HC42F	CD74HCT42E	CD54HCT42F	BCD-to-Decimal Decoder (1-to-10)	14
CD74HC73E	CD54HC73F	CD74HCT73E	CD54HCT73F	Dual J-K Flip-Flop w/RESET	14
CD74HC74E	CD54HC74F	CD74HCT74E	CD54HCT74F	Dual D Flip-Flop w/SET and RESET	14
CD74HC75E	CD54HC75F	CD74HCT75E	CD54HCT75F	Quad Bistable Transparent Latch	16
CD74HC85E	CD54HC85F	CD74HCT85E	CD54HCT85F	4-Bit Magnitude Comparator	16
CD74HC86E	CD54HC86F	CD74HCT86E	CD54HCT86F	Quad 2-Input EXCLUSIVE-OR Gate	14
CD74HC107E	CD54HC107F	CD74HCT107E	CD54HCT107F	Dual J-K Flip-Flop w/RESET	14
CD74HC109E	CD54HC109F	CD74HCT109E	CD54HCT109F	Dual J-K Flip-Flop w/SET and RESET	14
CD74HC112E	CD54HC112F	CD74HCT112E	CD54HCT112F	Dual J-K Flip-Flop w/SET and RESET	16
CD74HC123E	CD54HC123F	CD74HCT123E	CD54HCT123F	Dual Retriggerable Monostable Multivibrator w/RESET	16
CD74HC132E	CD54HC132F	CD74HCT132E	CD54HCT132F	Quad 2-Input NAND Schmitt Trigger	14
CD74HC138E	CD54HC138F	CD74HCT138E	CD54HCT138F	3-to-8 Line Decoder/Demultiplexer, Inverting	16
CD74HC139E	CD54HC139F	CD74HCT139E	CD54HCT139F	Dual 2-of-4 Line Decoder/Demultiplexer	16
CD74HC147E	CD54HC147F	CD74HCT147E	CD54HCT147F	10-to-4-Line Priority Encoder	16
CD74HC151E	CD54HC151F	CD74HCT151E	CD54HCT151F	8-Input Multiplexer	16
CD74HC153E	CD54HC153F	CD74HCT153E	CD54HCT153F	Dual 4-Input Multiplexer	16
CD74HC154E	CD54HC154F	CD74HCT154E	CD54HCT154F	4-to-16-Line Decoder/Demultiplexer	24
CD74HC157E	CD54HC157F	CD74HCT157E	CD54HCT157F	Quad 2-Input Multiplexer	16
CD74HC158E	CD54HC158F	CD74HCT158E	CD54HCT158F	Quad 2-Input Multiplexer, Inverting	16
CD74HC160E	CD54HC160F	CD74HCT160E	CD54HCT160F	Synchronous BCD Decade Counter, Asynchronous Reset	16
CD74HC161E	CD54HC161F	CD74HCT161E	CD54HCT161F	Synchronous 4-Bit Binary Counter, Asynchronous Reset	16
CD74HC162E	CD54HC162F	CD74HCT162E	CD54HCT162F	Synchronous BCD Decade Counter, Synchronous Reset	16
CD74HC163E	CD54HC163F	CD74HCT163E	CD54HCT163F	Synchronous 4-Bit Binary Counter, Synchronous Reset	16
CD74HC164E	CD54HC164F	CD74HCT164E	CD54HCT164F	8-Bit Serial-In Parallel-Out Shift Register	14
CD74HC165E	CD54HC165F	CD74HCT165E	CD54HCT165F	8-Bit Parallel-In Serial-Out Shift Register	16
CD74HC166E	CD54HC166F	CD74HCT166E	CD54HCT166F	8-Bit Parallel-In Serial-Out Shift Register	16
CD74HC173E	CD54HC173F	CD74HCT173E	CD54HCT173F	Quad D-Type Flip-Flop, 3-State	16
CD74HC174E	CD54HC174F	CD74HCT174E	CD54HCT174F	Hex D-Type Flip-Flop w/RESET	16
CD74HC175E	CD54HC175F	CD74HCT175E	CD54HCT175F	Quad D-Type Flip-Flop w/RESET	16
CD74HC190E	CD54HC190F	CD74HCT190E	CD54HCT190F	Presettable Synchronous BCD Decade Up/Down Counter	16
CD74HC191E	CD54HC191F	CD74HCT191E	CD54HCT191F	Synchronous 4-Bit Binary Up/Down Counter	16
CD74HC192E	CD54HC192F	CD74HCT192E	CD54HCT192F	Synchronous BCD Decade Up/Down Counter	16
CD74HC193E	CD54HC193F	CD74HCT193E	CD54HCT193F	Synchronous 4-Bit Binary Up/Down Counter	16
CD74HC194E	CD54HC194F	CD74HCT194E	CD54HCT194F	4-Bit Bidirectional Universal Shift Register	16
CD74HC195E	CD54HC195F	CD74HCT195E	CD54HCT195F	4-Bit Parallel Access Shift Register	16
CD74HC221E	CD54HC221F	CD74HCT221E	CD54HCT221F	Dual Monostable Multivibrator w/RESET	16
CD74HC238E	CD54HC238F	CD74HCT238E	CD54HCT238F	3-to-8-Line Decoder/Demultiplexer	16
CD74HC240E	CD54HC240F	CD74HCT240E	CD54HCT240F	Octal Buffer/Line Driver, 3-State, Inverting	20
CD74HC241E	CD54HC241F	CD74HCT241E	CD54HCT241F	Octal Buffer/Line Driver, 3-State	20
CD74HC242E	CD54HC242F	CD74HCT242E	CD54HCT242F	Quad Bus Transceiver, 3-State, Inverting	14
CD74HC243E	CD54HC243F	CD74HCT243E	CD54HCT243F	Quad Bus Transceiver, 3-State	14
CD74HC244E	CD54HC244F	CD74HCT244E	CD54HCT244F	Octal Buffer/Line Driver, 3-State	20
CD74HC245E	CD54HC245F	CD74HCT245E	CD54HCT245F	Octal Bus Transceiver, 3-State	16
CD74HC251E	CD54HC251F	CD74HCT251E	CD54HCT251F	8-Input Multiplexer, 3-State	16
CD74HC253E	CD54HC253F	CD74HCT253E	CD54HCT253F	Dual 4-Input Multiplexer, 3-State	16
CD74HC257E	CD54HC257F	CD74HCT257E	CD54HCT257F	Quad 2-Input Multiplexer, 3-State	16
CD74HC259E	CD54HC259F	CD74HCT259E	CD54HCT259F	8-Bit Addressable Latch	16
CD74HC273E	CD54HC273F	CD74HCT273E	CD54HCT273F	Octal D-Type Flip-Flop w/RESET	20
CD74HC280E	CD54HC280F	CD74HCT280E	CD54HCT280F	9-Bit Odd/Even Parity Generator/Checker	14
CD74HC297E	CD54HC297F	CD74HCT297E	CD54HCT297F	Digital Phase-Locked-Loop Filter	16
CD74HC299E	CD54HC299F	CD74HCT299E	CD54HCT299F	8-Bit Universal Shift Register, 3-State	20
CD74HC354E	CD54HC354F	CD74HCT354E	CD54HCT354F	8-Input Multiplexer/Register, 3-State	20
CD74HC356E	CD54HC356F	CD74HCT356E	CD54HCT356F	8-Input Multiplexer/Register, 3-State	20
CD74HC365E	CD54HC365F	CD74HCT365E	CD54HCT365F	Hex Buffer/Line Driver, 3-State	16
CD74HC366E	CD54HC366F	CD74HCT366E	CD54HCT366F	Hex Buffer/Line Driver, 3-State, Inverting	16
CD74HC367E	CD54HC367F	CD74HCT367E	CD54HCT367F	Hex Buffer/Line Driver, 3-State	16
CD74HC368E	CD54HC368F	CD74HCT368E	CD54HCT368F	Hex Buffer/Line Driver, 3-State, Inverting	16
CD74HC373E	CD54HC373F	CD74HCT373E	CD54HCT373F	Octal Transparent Latch, 3-State	20
CD74HC374E	CD54HC374F	CD74HCT374E	CD54HCT374F	Octal D-Type Flip-Flop, 3-State	20
CD74HC377E	CD54HC377F	CD74HCT377E	CD54HCT377F	Octal D-Type Flip-Flop with Data Enable	20

*CD54/74HCU04E, F unbuffered version also available.

© IC MASTER 1984

Index to Devices (Cont'd)

CMOS Logic		TTL Logic			
Plastic Pkg.	CERDIP	Plastic Pkg.	CERDIP	Description	Pins
CD74HC384E	CD54HC384F	CD74HCT384E	CD54HCT384F	8-Bit Serial/Parallel Two's Complement Multiplier	16
CD74HC390E	CD54HC390F	CD74HCT390E	CD54HCT390F	Dual Decade Ripple Counter	16
CD74HC393E	CD54HC393F	CD74HCT393E	CD54HCT393F	Dual 4-Bit Binary Ripple Counter	16
CD74HC423E	CD54HC423F	CD74HCT423E	CD54HCT423F	Dual Retriggerable Monostable Multivibrator with Reset	16
CD74HC533E	CD54HC533F	CD74HCT533E	CD54HCT533F	Octal Transparent Latch, 3-State, Inverting	20
CD74HC534E	CD54HC534F	CD74HCT534E	CD54HCT534F	Octal D-Type Flip-Flop, 3-State, Inverting	20
CD74HC540E	CD54HC540F	CD74HCT540E	CD54HCT540F	Octal Buffer/Line Driver, 3-State, Inverting	20
CD74HC541E	CD54HC541F	CD74HCT541E	CD54HCT541F	Octal Buffer/Line Driver, 3-State	20
CD74HC563E	CD54HC563F	CD74HCT563E	CD54HCT563F	Octal Transparent Latch, 3-State, Inverting	20
CD74HC564E	CD54HC564F	CD74HCT564E	CD54HCT564F	Octal D-Type Flip-Flop, 3-State, Inverting	20
CD74HC573E	CD54HC573F	CD74HCT573E	CD54HCT573F	Octal Transparent Latch, 3-State	20
CD74HC574E	CD54HC574F	CD74HCT574E	CD54HCT574F	Octal D-Type Flip-Flop, 3-State	20
CD74HC640E	CD54HC640F	CD74HCT640E	CD54HCT640F	Octal Bus Transceiver, 3-State, Inverting	20
CD74HC643E	CD54HC643F	CD74HCT643E	CD54HCT643F	Octal Bus Transceiver, 3-State, True/Inverting	20
CD74HC646E	CD54HC646F	CD74HCT646E	CD54HCT646F	Octal Bus Transceiver/Register, 3-State	20
CD74HC648E	CD54HC648F	CD74HCT648E	CD54HCT648F	Octal Bus Transceiver/Register, 3-State, Inverting	20
CD74HC670E	CD54HC670F	CD74HCT670E	CD54HCT670F	4 x 4 Register File, 3-State	16
CD74HC688E	CD54HC688F	CD74HCT688E	CD54HCT688F	8-Bit Magnitude Comparator	20
CD74HC4002E	CD54HC4002F	CD74HCT4002E	CD54HCT4002F	Dual 4-Input NOR Gate	14
CD74HC4015E	CD54HC4015F	CD74HCT4015E	CD54HCT4015F	Dual 4-Bit Serial-In/Parallel-Out Shift Register	16
CD74HC4016E	CD54HC4016F	CD74HCT4016E	CD54HCT4016F	Quad Bilateral Switch	14
CD74HC4017E	CD54HC4017F	CD74HCT4017E	CD54HCT4017F	Johnson Decade Counter w/10 Decoded Outputs	16
CD74HC4020E	CD54HC4020F	CD74HCT4020E	CD54HCT4020F	14-Stage Binary Ripple Counter	16
CD74HC4024E	CD54HC4024F	CD74HCT4024E	CD54HCT4024F	7-Stage Binary Ripple Counter	14
CD74HC4040E	CD54HC4040F	CD74HCT4040E	CD54HCT4040F	12-Bit Binary Ripple Counter	16
CD74HC4046E	CD54HC4046F	CD74HCT4046E	CD54HCT4046F	Phase-Locked Loop with VCO	16
CD74HC4049E	CD54HC4049F	—	—	Hex Inverting HIGH-to-LOW Level Shifter	16
CD74HC4050E	CD54HC4050F	—	—	Hex HIGH-to-LOW Level Shifter	16
CD74HC4051E	CD54HC4051F	CD74HCT4051E	CD54HCT4051F	8-Channel Analog Multiplexer/Demultiplexer	16
CD74HC4052E	CD54HC4052F	CD74HCT4052E	CD54HCT4052F	Dual 4-Channel Analog Multiplexer/Demultiplexer	16
CD74HC4053E	CD54HC4053F	CD74HCT4053E	CD54HCT4053F	Triple 2-Channel Analog Multiplexer/Demultiplexer	16
CD74HC4060E	CD54HC4060F	CD74HCT4060E	CD54HCT4060F	14-Stage Binary Ripple Counter w/Oscillator	16
CD74HC4066E	CD54HC4066F	CD74HCT4066E	CD54HCT4066F	Quad Bilateral Switch	14
CD74HC4067E	CD54HC4067F	CD74HCT4067E	CD54HCT4067F	16-Channel Analog Multiplexer/Demultiplexer	24
CD74HC4075E	CD54HC4075F	CD74HCT4075E	CD54HCT4075F	Triple 3-Input OR Gate	14
CD74HC4094E	CD54HC4094F	CD74HCT4094E	CD54HCT4094F	8-Stage Shift-and-Store Bus Register	16
CD74HC4511E	CD54HC4511F	CD74HCT4511E	CD54HCT4511F	BCD-to-7-Segment Latch/Decoder/Driver	16
CD74HC4514E	CD54HC4514F	CD74HCT4514E	CD54HCT4514F	4-to-16-Line Decoder/Demultiplexer w/Input Latches	24
CD74HC4515E	CD54HC4515F	CD74HCT4515E	CD54HCT4515F	4-to-16-Line Decoder with Input Latches	24
CD74HC4518E	CD54HC4518F	CD74HCT4518E	CD54HCT4518F	Dual Synchronous BCD Counter	16
CD74HC4520E	CD54HC4520F	CD74HCT4520E	CD54HCT4520F	Dual 4-Bit Synchronous Binary Counter	16
CD74HC4538E	CD54HC4538F	CD74HCT4538E	CD54HCT4538F	Dual Precision Monostable Multivibrator	14
CD74HC4543E	CD54HC4543F	CD74HCT4543E	CD54HCT4543F	BCD-to-7-Segment Latch/Decoder/Driver for LCDs	16
CD74HC40102E	CD54HC40102F	CD74HCT40102E	CD54HCT40102F	8-Bit Synchronous BCD Down Counter	16
CD74HC40103E	CD54HC40103F	CD74HCT40103E	CD54HCT40103F	8-Bit Binary Down Counter	16
CD74HC40104E	CD54HC40104F	CD74HCT40104E	CD54HCT40104F	4-Bit Bidirectional Universal Shift Register, 3-State	16
CD74HC40105E	CD54HC40105F	CD74HCT40105E	CD54HCT40105F	4 Bits x 16 Words FIFO Register	16

Note: Add package suffix code to part number on all orders.
E = Dual-In-Line Plastic Package—Temp. Range = -40°C to +85°C.
F = Dual-In-Line Frit-Seal Ceramic Package (CERDIP)—Temp. Range = -55°C to +125°C.

SP74HCT CMOS LOGIC PRODUCTS

FEATURES

- Pin-Out and Function compatible to Low Power Schottky Logic.
- TTL compatible, interface directly with standard TTL logic levels.
- Low quiescent power dissipation.
- High Noise Immunity.
- All devices have input protective diodes connected to V_{CC} and ground.

ORDERING INFORMATION

Ceramic DIP (Cerdip) Package	SP74HCTxxxJ	Industrial Temp. Range
Plastic DIP Package	SP74HCTxxxN	Industrial Temp. Range

ABSOLUTE MAXIMUM RATINGS

Parameter		Min	Max	Units
V_{CC}	DC Supply Voltage	−0.3	7.0	V
V_I, V_O	Input or Output Voltage	−0.3	V_{CC} +0.3	V
T_S	Storage Temperature	−65	+150	°C
P_D	Power Dissipation (Note 1)		500	mW
T_L	Lead Temperature (1/16″ from mounting surface for 10 Sec)		+300	°C

Note 1: Cerdip "J" Package: Derate at 12mW/°C from +85 to +125° C.
Plastic "N" Package: Derate at 12mW/°C from +45 to +85 °C.

DC ELECTRICAL CHARACTERISTICS

Symbol	Parameter	Conditions	$T_A = 25°C$		SP74HCT $T_A = -40$ to $+85°C$	Units
			Typ	Guaranteed Limits		
V_{IH}	Minimum High Level Input Voltage	$V_O = 0.1$ or $V_{CC} - 0.1$ $I_O \leq 20\mu A$		2.0	2.0	V
V_{IL}	Maximum Low Level Input Voltage	$V_O = 0.1$ or $V_{CC} - 0.1$ $I_O \leq 20\mu A$		0.8	0.8	V
V_{OH}	Minimum High Level Output Voltage	$V_I = V_{IH}$ or V_{IL} $\lvert I_O \rvert = 20\mu A$	V_{CC}	$V_{CC} - 0.1$	$V_{CC} - 0.1$	V
		$\lvert I_O \rvert = 6.0mA$ $V_{CC} = 4.5V$		4.0	3.7	V
		$\lvert I_O \rvert = 6.0mA$ $V_{CC} = 5.5V$		5.0	4.7	V
V_{OL}	Maximum Low Level Output Voltage	$V_I = V_{IH}$ or V_{IL} $\lvert I_O \rvert = 20\mu A$		0.1	0.1	V
		$\lvert I_O \rvert = 6.0mA$ $V_{CC} = 4.5V$		0.3	0.3	V
		$\lvert I_O \rvert = 6.0mA$ $V_{CC} = 5.5V$		0.3	0.3	V
I_I	Maximum Input Current	$V_I = V_{CC}$ or GND		±0.1	±1.0	μA
I_{CC}	Maximum Quiescent Supply Current	$V_I = V_{CC}$ or GND $I_O = 0\mu A$		2.0	20	μA

© IC MASTER 1984

SP74HCT SERIES LOGIC PRODUCTS

CURRENT PRODUCTS

138	Decoder/Demultiplexer 3-to-8 Line Decoders, 3 Enable Inputs and Inverted Outputs
139	Decoder/Demultiplexer Two independent 2-to-4 Line Decoders with Inverted Outputs
240	Octal Buffer/Line Driver Inverting 3-State Outputs
241	Octal Buffer/Line Driver Non-Inverting 3-State Outputs
244	Octal Buffer/Line Driver Non-Inverting 3-State Outputs
245	Octal Bus Transceivers Non-Inverting 3-State Outputs
373	Octal Transparent Latches Non-Inverting 3-State Outputs
374	Octal D-Type Flip-Flops Non-Inverting 3-State Outputs
502	8-Bit Successive Approximation Register

*503	8-Bit Successive Approximation Register
*504	12-Bit Successive Approximation Register
540	Octal Buffer/Line Driver Inverting 3-State Outputs
541	Octal Buffer/Line Driver Non-Inverting 3-State Outputs
573	Octal Transparent Latches Non-Inverting 3-State Outputs Functionally identical to 373, but 573 Inputs and Outputs are on opposite sides of package
574	Octal D-Type Flip-Flops Non-Inverting 3-State Outputs Functionally identical to 374, but 574 Inputs and Outputs are on opposite sides of package
670	4 x 4 Register File 3-State Outputs Separate Read and Write Inputs Simultaneous Read/Write Expandable to 1024 Words

* Future Products

VOLTAGE WAVEFORMS PROPAGATION DELAY TIMES

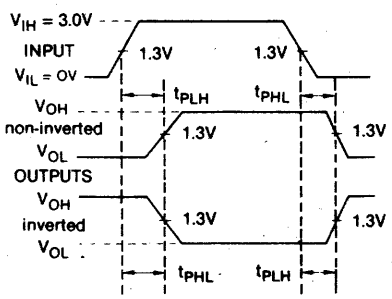

EQUIVALENT TEST CIRCUIT

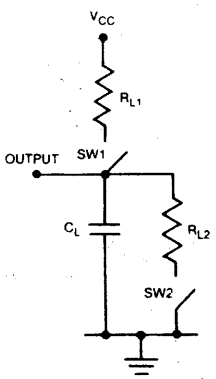

VOLTAGE WAVEFORMS ENABLE & DISABLE TIMES, 3-STATE OUTPUTS

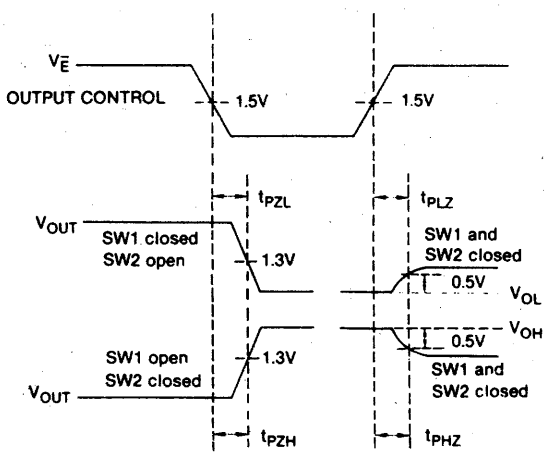

All devices contain diodes to protect inputs against damage due to high static voltages or electric fields; however, it is advised that precautions be taken not to exceed the max. recommended input voltages. All unused inputs must be connected to an appropriate logic voltage level (either V_{CC} or GND).

TEST CONDITIONS

V_{CC} = 5.0V
T_A = +25°C
C_L = 15pF
R_{L1} = 2KΩ
R_{L2} = 5KΩ

Symbol	SW1	SW2
t_{PZH}	0	1
t_{PZL}	1	0
t_{PLZ}	1	1
t_{PHZ}	1	1

© IC MASTER 1984

SP74HCT SERIES LOGIC PRODUCTS

PIN CONFIGURATIONS

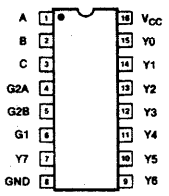

Ordering Information

SP74HCT138N Plastic DIP Industrial Temp Range	SP74HCT138J Ceramic DIP Industrial Temp Range

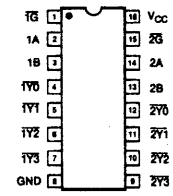

Ordering Information

SP74HCT139N Plastic DIP Industrial Temp Range	SP74HCT139J Ceramic DIP Industrial Temp Range

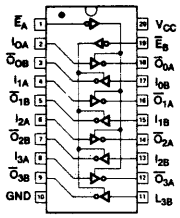

Ordering Information

SP74HCT240N Plastic DIP Industrial Temp Range	SP74HCT240J Ceramic DIP Industrial Temp Range

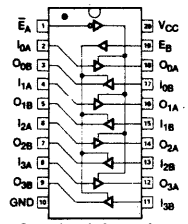

Ordering Information

SP74HCT241N Plastic DIP Industrial Temp Range	SP74HCT241J Ceramic DIP Industrial Temp Range

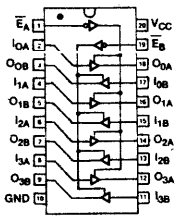

Ordering Information

SP74HCT244N Plastic DIP Industrial Temp Range	SP74HCT244J Ceramic DIP Industrial Temp Range

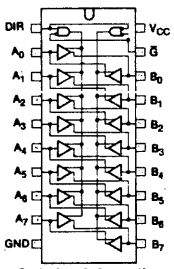

Ordering Information

SP74HCT245N Plastic DIP Industrial Temp Range	SP74HCT245J Ceramic DIP Industrial Temp Range

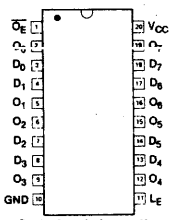

Ordering Information

SP74HCT373N Plastic DIP Industrial Temp Range	SP74HCT373J Ceramic DIP Industrial Temp Range

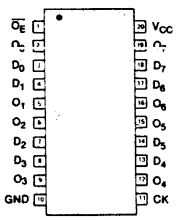

Ordering Information

SP74HCT374N Plastic DIP Industrial Temp Range	SP74HCT374J Ceramic DIP Industrial Temp Range

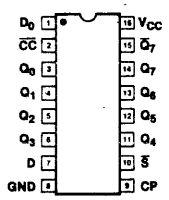

Ordering Information

SP74HCT502N Plastic DIP Industrial Temp Range	SP74HCT502J Ceramic DIP Industrial Temp Range

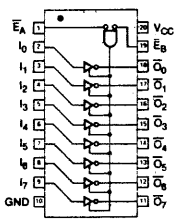

Ordering Information

SP74HCT540N Plastic DIP Industrial Temp Range	SP74HCT540J Ceramic DIP Industrial Temp Range

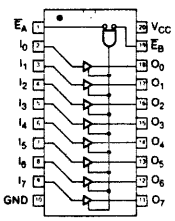

Ordering Information

SP74HCT541N Plastic DIP Industrial Temp Range	SP74HCT541J Ceramic DIP Industrial Temp Range

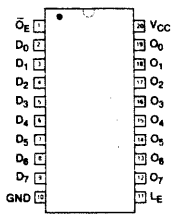

Ordering Information

SP74HCT573N Plastic DIP Industrial Temp Range	SP74HCT573J Ceramic DIP Industrial Temp Range

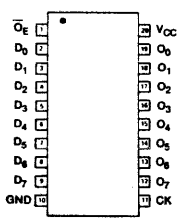

Ordering Information

SP74HCT574N Plastic DIP Industrial Temp Range	SP74HCT574J Ceramic DIP Industrial Temp Range

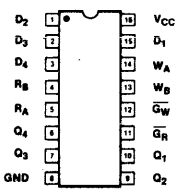

Ordering Information

SP74HCT670N Plastic DIP Industrial Temp Range	SP74HCT670J Ceramic DIP Industrial Temp Range

© IC MASTER 1984

SP74HCT SERIES LOGIC PRODUCTS

AC SWITCHING CHARACTERISTICS

SP74HCT138

Parameter Propagation Time	Min.	Typ.	Max.	Unit
t_{PLH} Address to Output		18	30	ns
t_{PHL} Address to Output		25	35	ns
t_{PLH} Enable to Output		18	35	ns
t_{PHL} Enable to Output		25	35	ns

SP74HCT139

Parameter Propagation Time	Min.	Typ.	Max.	Unit
t_{PLH} Address to Output		20	30	ns
t_{PHL} Address to Output		27	40	ns
t_{PLH} Enable to Output		25	35	ns
t_{PHL} Enable to Output		25	40	ns

SP74HCT240

Parameter Propagation Time	Min.	Typ.	Max.	Unit
t_{PLH} Address to Output		17	35	ns
t_{PHL} Address to Output		25	35	ns
t_{PZH} Enable to Output		25	35	ns
t_{PZL} Enable to Output		30	40	ns
t_{PLZ} Disable to Output		30	40	ns
t_{PHZ} Disable to Output		25	40	ns

SP74HCT241

Parameter Propagation Time	Min.	Typ.	Max.	Unit
t_{PLH} Address to Output		17	35	ns
t_{PHL} Address to Output		25	35	ns
t_{PZH} Enable to Output		25	35	ns
t_{PZL} Enable to Output		30	40	ns
t_{PLZ} Disable to Output		30	40	ns
t_{PHZ} Disable to Output		25	40	ns

SP74HCT244

Parameter Propagation Time	Min.	Typ.	Max.	Unit
t_{PLH} Address to Output		17	35	ns
t_{PHL} Address to Output		25	35	ns
t_{PZH} Enable to Output		25	35	ns
t_{PZL} Enable to Output		30	40	ns
t_{PLZ} Disable to Output		30	40	ns
t_{PHZ} Disable to Output		25	40	ns

SP74HCT245

Parameter Propagation Time	Min.	Typ.	Max.	Unit
t_{PLH} Address to Output		17	35	ns
t_{PHL} Address to Output		25	35	ns
t_{PZH} Enable to Output		25	35	ns
t_{PZL} Enable to Output		30	40	ns
t_{PLZ} Disable to Output		30	40	ns
t_{PHZ} Disable to Output		25	40	ns

SP74HCT373

Parameter Propagation Time	Min.	Typ.	Max.	Unit
t_{PLH} Data to Output		17	30	ns
t_{PHL} Data to Output		25	35	ns
t_{PLH} Latch Enable to Output		30	40	ns
t_{PHL} Latch Enable to Output		30	40	ns
t_{PZH} Output Enable to High-Level		25	35	ns
t_{PZL} Output Enable to Low-Level		25	35	ns
t_{PHZ} Output Disable from High-Level		25	35	ns
t_{PLZ} Output Disable from Low-Level		25	35	ns

SP74HCT374

Parameter Propagation Time	Min.	Typ.	Max.	Unit
t_{PLH} Clock to Output		25	35	ns
t_{PHL} Clock to Output		26	38	ns
t_{PZH} Output Enable to High-Level		25	35	ns
t_{PZL} Output Enable to Low-Level		25	35	ns
t_{PHZ} Output Disable from High-Level		20	28	ns
t_{PLZ} Output Disable from Low-Level		20	28	ns

SP74HCT502

Parameter	Description	Min	Typ	Max	Units
t_{pd+}	Turn OFF Delay CP to Output High		30		nS
t_{pd-}	Turn ON Delay CP to Output Low		25		nS
$t_{S(D)}$	Set-Up Time Data Input	0			nS
$t_{S(\overline{S})}$	Set-Up Time Start Input	0			nS
$t_{pwL(CP)}$	Minimum Low Clock Pulse Width		20		nS
$t_{pwH(CP)}$	Minimum High Clock Pulse Width		20		nS
f_{max}	Maximum Clock Frequency		25		MHz

Derate +0.31%/°C for all propagation times

SP74HCT540

Parameter Propagation Time	Min.	Typ.	Max.	Unit
t_{PLH} Address to Output		17	35	ns
t_{PHL} Address to Output		25	35	ns
t_{PZH} Enable to Output		25	35	ns
t_{PZL} Enable to Output		30	40	ns
t_{PLZ} Disable to Output		30	40	ns
t_{PHZ} Disable to Output		25	40	ns

SP74HCT541

Parameter Propagation Time	Min.	Typ.	Max.	Unit
t_{PLH} Address to Output		17	35	ns
t_{PHL} Address to Output		25	35	ns
t_{PZH} Enable to Output		25	35	ns
t_{PZL} Enable to Output		30	40	ns
t_{PLZ} Disable to Output		30	40	ns
t_{PHZ} Disable to Output		25	40	ns

SP74HCT573

Parameter Propagation Time	Min.	Typ.	Max.	Unit
t_{PLH} Data to Output		17	30	ns
t_{PHL} Data to Output		25	35	ns
t_{PLH} Latch Enable to Output		32	50	ns
t_{PHL} Latch Enable to Output		36	55	ns
t_{PZH} Output Enable to High-Level		25	35	ns
t_{PZL} Output Enable to Low-Level		25	35	ns
t_{PHZ} Output Disable from High-Level		25	35	ns
t_{PLZ} Output Disable from Low-Level		25	35	ns

SP74HCT574

Parameter Propagation Time	Min.	Typ.	Max.	Unit
t_{PLH} Clock to Output		25	38	ns
t_{PHL} Clock to Output		26	38	ns
t_{PZH} Output Enable to High-Level		25	35	ns
t_{PZL} Output Enable to Low-Level		25	35	ns
t_{PHZ} Output Disable from High-Level		20	28	ns
t_{PLZ} Output Disable from Low-Level		20	28	ns

SP74HCT670

Parameter	From	To	Min	Typ	Max	Unit
t_{PLH}	Read Select	Any Q		33		ns
t_{PHL}				33		ns
t_{PLH}	Write Enable	Any Q		33		ns
t_{PHL}				33		ns
t_{PLH}	Data	Any Q		33		ns
t_{PHL}				33		ns
t_{PZH}	Read Enable	Any Q		25		ns
t_{PZL}				25		ns
t_{PHZ}				25		ns
t_{PLZ}				25		ns

© IC MASTER 1984

SP54/74HC LOW POWER, HIGH SPEED CMOS LOGIC PRODUCTS

ORDERING INFORMATION

Plastic DIP Package	SP74HCxxxN	Industrial Temp. Range
Ceramic DIP Package	SP74HCxxxJ	Industrial Temp. Range
Ceramic DIP Package	SP54HCxxxJ	Military Temp. Range

ABSOLUTE MAXIMUM RATINGS

	Parameter	Min	Max	Units
V_{CC}	DC Supply Voltage	−0.5	+7.0	V
V_I, V_O	Input or Output Voltage	−0.5	V_{CC} +0.5	V
I_L	DC Current Per Pin Any Input or Output		25	mA
I_{CC}	DC Current Drain, V_{CC} and GND		50	mA
T_S	Storage Temperature	−65	+150	°C
P_D	Power Dissipation (Note 1)		500	mW
T_L	Lead Temperature (1/16" from mounting surface for 10 sec)		+300	°C

Note 1: Derate at 12mW/°C from +45 to +85° C for Plastic "N" Package.
Derate at 12mW/°C from +85°C for Ceramic "J" Package.

RECOMMENDED OPERATING CONDITIONS

	Parameter		Min	Max	Units
V_{CC}	DC Supply Voltage Range		2.0	6.0	V
V_I, V_O	Input Voltage, Output Voltage		0	V_{CC}	V
T_A	Operating Temperature Range	54 Series	−55	+125	°C
		74 Series	−40	+85	°C

FEATURES

- Utilizes SPI's Selective Oxidation, Silicon-Gate CMOS Process.
- Speed, function and pin-out compatible to 74LS series Logic.
- High Noise Immunity
- Low quiescent power consumption
- Wide power supply range.
- Operates over V_{CC} range of 2.0 to 6.0 Volts.
- Standardized set of Input and Output electrical characteristics.

INPUT

- All devices have Input Protection diodes to V_{CC} and ground.
- All devices have CMOS Logic input voltage levels.

OUTPUT

- The standard output of 54/74HC devices can source and sink 4mA while devices designed to interface with a Bus System can drive 6mA. Sink and drive capability is guaranteed over −40 to +85°C for "74" series and −55 to +125°C for "54" series.
- Symmetric current drive.
- All Outputs are fully buffered.

DC ELECTRICAL CHARACTERISTICS

Symbol	Parameter	Conditions	V_{CC}	Typ T=25°C	Guaranteed Limits SP74HC −40 to +85°C	Guaranteed Limits SP54HC −55 to +125°C	Units
V_{IH}	Minimum High Level Input Voltage	V_O=0.1V or V_{CC}−0.1V, $I_O \le 20\ \mu A$	2.0V		1.5	1.5	V
			4.5V		3.15	3.15	
			6.0V		4.2	4.2	
V_{IL}	Maximum Low Level Input Voltage	V_O=0.1V or V_{CC}−0.1V, $I_O \le 20\ \mu A$	2.0V		0.3	0.3	V
			4.5V		0.9	0.9	
			6.0V		1.2	1.2	
V_{OH}	Minimum High Level Output Voltage	I_{OH}=20 μA, V_I=V_{CC} or GND	2.0V	2.0	1.9	1.9	V
			4.5V	4.5	4.4	4.4	
			6.0V	6.0	5.9	5.9	
		I_{OH}= *, V_I=V_{CC} or GND	4.5V		3.7	3.7	V
			6.0V		5.2	5.2	
V_{OL}	Maximum Low Level Output Voltage	I_{OL}=20 μA, V_I=V_{CC} or GND	2.0V	0	0.1	0.1	V
			4.5V	0	0.1	0.1	
			6.0V	0	0.1	0.1	
		I_{OL}= *, V_I=V_{CC} or GND	4.5V	0.1	0.3	0.4	V
			6.0V		0.3	0.4	
I_I	Input Leakage Current	V_I=V_{CC} or GND, V_{CC}=2.0 to 6.0V			±1.0	±1.0	μA
I_{CC}	Maximum Quiescent Supply Current	V_I=V_{CC} or GND, I_O=0 μA, T_A=25°C	5.0V	0.1	2.0	2.0	μA
		T_A=85°C	5.0V		20.0	20.0	
		T_A=125°C	5.0V			40.0	

* 4ma STD outputs 6ma Bus-Drivers

All devices contain diodes to protect inputs against damage due to high static voltages or electric fields; however, it is advised that precautions be taken not to exceed the maximum recommended input voltages. All unused inputs must be connected to an appropriate logic voltage level (either V_{CC} or GND).

© IC MASTER 1984

Introduction

The SPI SP54/74HC series logic devices, designed in SPI silicon gate CMOS technology, accept CMOS logic input levels and have the capability to drive both CMOS and bipolar devices. The SP54/74HC family brings the designer the advantages of CMOS, namely, low quiescent power dissipation, wide power supply range, flexible interfacing and high noise immunity with speed, drive and pin-out compatibility to the 54/74LS family.

SPI presently offers 71 basic "HC" devices. By mid 1984 SPI will offer at least 100 "HC" device types as standard off-the-shelf products.

This application data provides device characterization and emphasizes the interfacing ability featured in SPI devices. SPI also offers 13 basic 74HCT devices designed to accept TTL logic levels.

Figure 1 Interface Levels

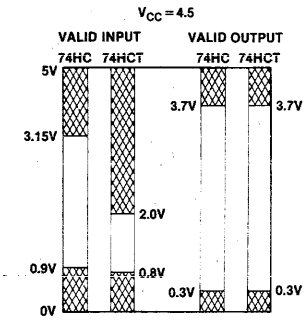

Figure 2 Input Configuration 74HCT Family

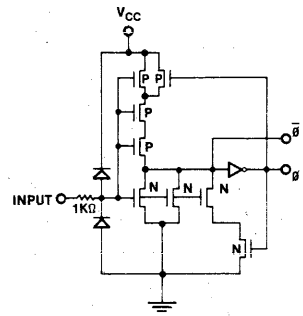

Figure 3 Input Configuration 74HC Family

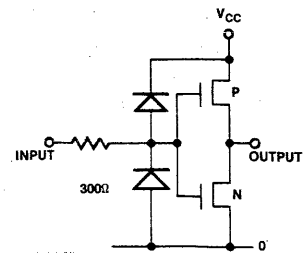

Output Configuration

The outputs of the SP54/74HC Series have symmetric drive characteristics. A feature of the SP54/74 HC series is a high 4mA minimum drive over the operating temperature range. Typical characteristics are shown in figures 4 and 5.

Figure 4 Output High Characteristic

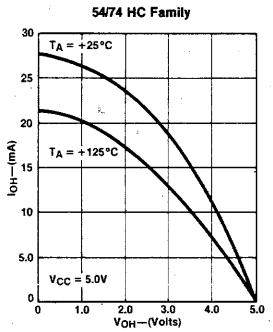

Figure 5 Output Low Characteristic

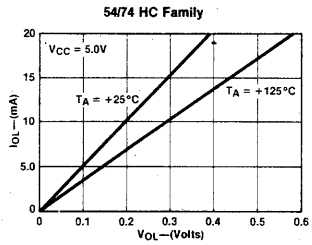

Figure 6 3 State Output-Configuration

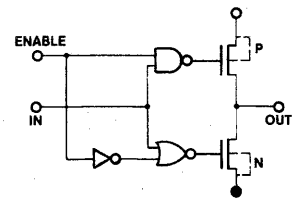

Power Dissipation

The primary cause of power dissipation in CMOS circuits is the charging of internal capacitances, the largest part being the output buffers. Thus, in a given system power dissipation will be minimized by choosing the largest scale integration possible. Figure 7 shows supply current as a function of input frequency for SP54/74 HC109.

AC Characteristics

The propagation delays of the 54/74 series are comparable to 54/74 LS series logic. Figures 8 and 9 show the test waveforms used for propagation delay characterization.

The output load circuits used for characterization of the SP54/74HC Family are shown in Figure 10. Figure 11 shows how propagation times vary with load capacitance, supply voltage and ambient temperature. Propagation time variation as a function of temperature is controlled by the silicon material. It is therefore correct to assume a typical coefficient of 0.31% per °C for all propagation times of SPI products.

Figure 7 Supply Current vs Input Frequency 54/74 HC 109

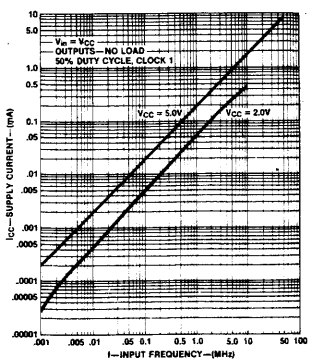

Figure 8 AC Waveforms

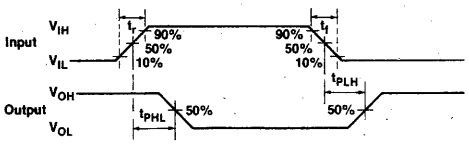

Figure 9 Voltage Waveforms Enable & Disable Times, 3-State Outputs

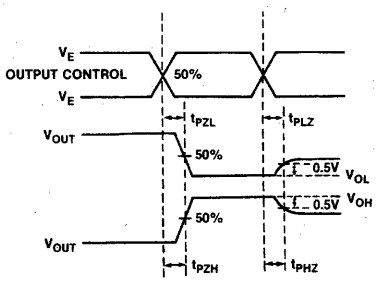

Figure 10 Output Load Circuits

Standard Outputs

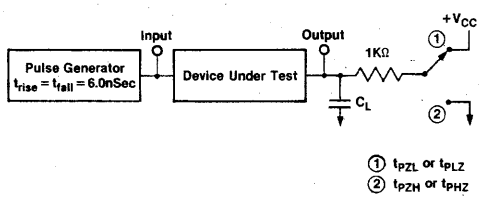

3-State Outputs

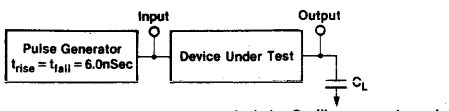

Includes Oscilloscope probe and test fixture capacitance $C_L = 15pF$ unless otherwise specified.

Figure 11 Propagation Times vs. Load Capacitance

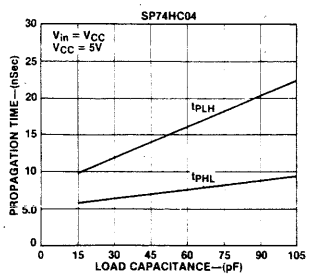

© IC MASTER 1984

54/74 Series AND/NAND Gates

SPXXHC00
SPXXHC08
SPXXHC10
SPXXHC11
SPXXHC20
SPXXHC30
SPXXHC132
SPXXHC133

SPXXHC00
Quad 2-Input NAND Gate

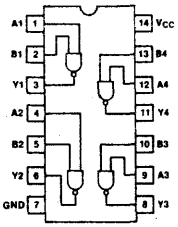

14 PIN DIP
TOP VIEW

SPXXHC08
Quad 2-Input AND Gate

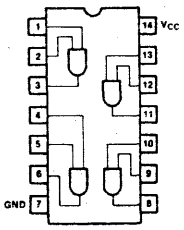

14 PIN DIP
TOP VIEW

SPXXHC10
Triple 3-Input NAND Gate

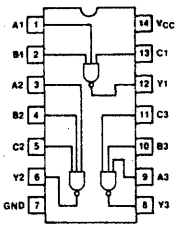

14 PIN DIP
TOP VIEW

SPXXHC11
Triple 3-Input AND Gate

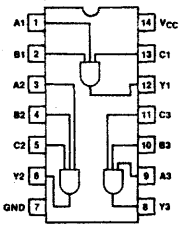

14 PIN DIP
TOP VIEW

SPXXHC20
Dual 4-Input NAND Gate

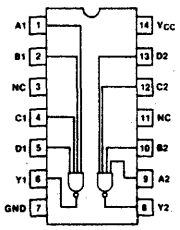

14 PIN DIP
TOP VIEW

SPXXHC30
8-Input NAND Gate

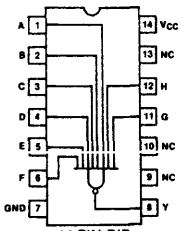

14 PIN DIP
TOP VIEW

SPXXHC132
Quad 2-Input NAND Gate
Schmitt Trigger

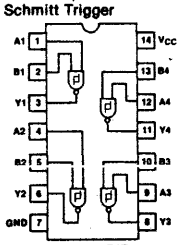

14 PIN DIP
TOP VIEW

SPXXHC133
13 Input NAND Gate

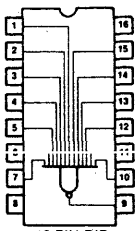

16 PIN DIP
TOP VIEW

54/74 Series Priority Encoders

SPXXHC147
SPXXHC148

SPXXHC147
10-to-4 Line Priority Encoder

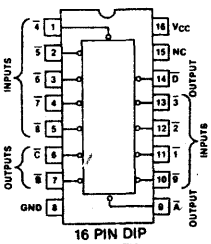

16 PIN DIP
TOP VIEW

SPXXHC148
8-to-3 Line Priority Encoder

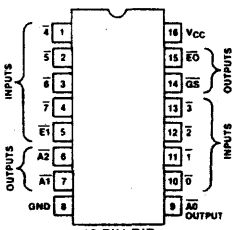

16 PIN DIP
TOP VIEW

54/74 Series Latches

SPXXHC75
SPXXHC77
SPXXHC373
SPXXHC533
SPXXHC573

SPXXHC75
Dual 2-Bit
Transparent Latch

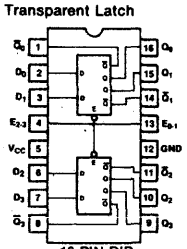

16 PIN DIP
TOP VIEW

SPXXHC77
Dual 2-Bit
Transparent Latch

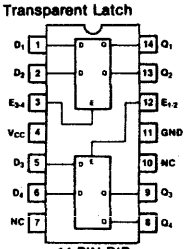

14 PIN DIP
TOP VIEW

SPXXHC373
Octal Transparent Latch
3-State Outputs

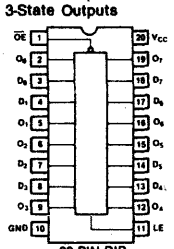

20 PIN DIP
TOP VIEW

SPXXHC533
Octal Transparent latch
3-State Ouputs

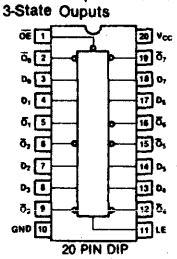

20 PIN DIP
TOP VIEW

SPXXHC573
Octal D-Type Latch
3-State Outputs

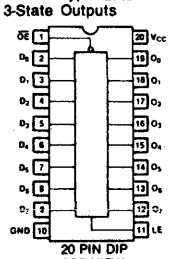

20 PIN DIP
TOP VIEW

54/74 Series 2-Input Multiplexers

SPXXHC157
SPXXHC158
SPXXHC257
SPXXHC258

SPXXHC157
Quad 2-Input Multiplexer
Non-Inverting Outputs

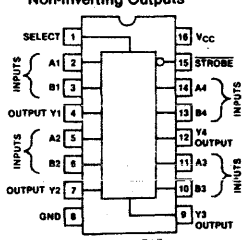

16 PIN DIP
TOP VIEW

SPXXHC158
Quad 2-Input Multiplexer,
Inverting Outputs

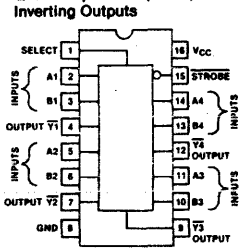

16 PIN DIP
TOP VIEW

SPXXHC257
Quad 2-Input Multiplexer
Non-Inverting 3-State Outputs

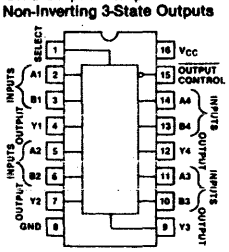

16 PIN DIP
TOP VIEW

SPXXHC258
Quad 2-Input Multiplexer
3-State Outputs

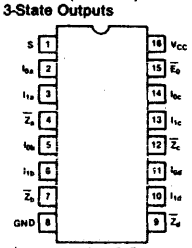

16 PIN DIP
TOP VIEW

© IC MASTER 1984

54/74 Series NOR/OR/XOR/XNOR Gates

SPXXHC02
SPXXHC27
SPXXHC32
SPXXHC86
SPXXHC266

SPXXHC02
Quad 2-Input NOR Gate

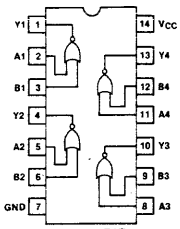

14 PIN DIP
TOP VIEW

SPXXHC27
Triple 3-Input NOR Gate

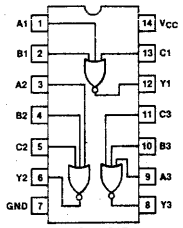

14 PIN DIP
TOP VIEW

SPXXHC32
Quad 2-Input OR Gate

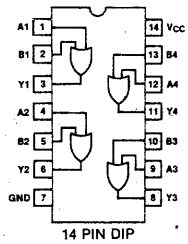

14 PIN DIP
TOP VIEW

SPXXHC86
Quad 2-Input Exclusive OR Gate

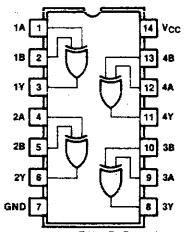

14 PIN DIP
TOP VIEW

SPXXHC266
Quad 2-Input Exclusive NOR (XNOR) Gates

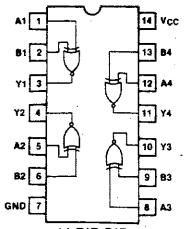

14 DIP DIP
TOP VIEW

54/74 Series Buffer/Line Drivers

SPXXHC240
SPXXHC241
SPXXHC365
SPXXHC540
SPXXHC541

SPXXHC240
Octal Buffer/Line Driver, 3-State Inverting Outputs

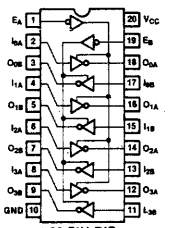

20 PIN DIP
TOP VIEW

SPXXHC241
Octal Buffer/Line Driver 3-State Non-Inverting Outputs

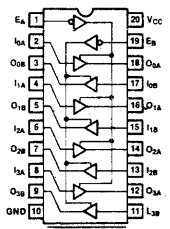

20 PIN DIP
TOP VIEW

SPXXHC365
Hex 3-State Bus Driver with Common 2-Input NOR Enable

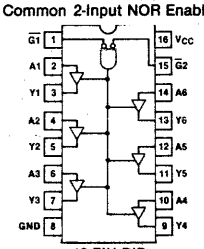

16 PIN DIP
TOP VIEW

SPXXHC540
Octal Buffer/Line Driver with 3-State Outputs

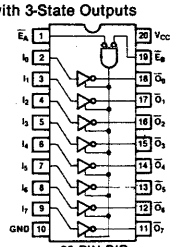

20 PIN DIP
TOP VIEW

SPXXHC541
Octal Buffer/Line Driver with 3-State Outputs, Non-Inverting

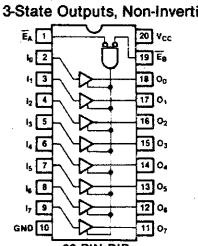

20 PIN DIP
TOP VIEW

54/74 Series Counters

SPXXHC393
SPXXHC4017
SPXXHC4020

SPXXHC393
Dual 4-Bit Sync. Counter

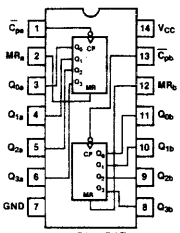

14 PIN DIP
TOP VIEW

SPXXHC4017
Decade Counter

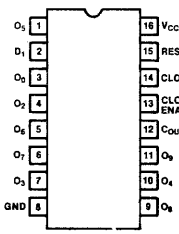

16 PIN DIP
TOP VIEW

SPXXHC4020
14-Stage Ripple Counter

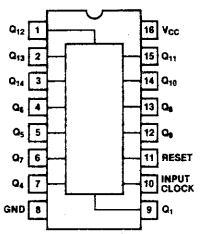

16 PIN DIP
TOP VIEW

54/74 Series BCD/Decade Counters

SPXXHC90
SPXXHC160
SPXXHC162
SPXXHC176
SPXXHC192

SPXXHC90
Decade Counters, Divide-by-2/ Synchronous Divide-by-5

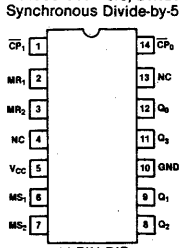

14 PIN DIP
TOP VIEW

SPXXHC160
BCD Decade Counter Asynchronous Reset

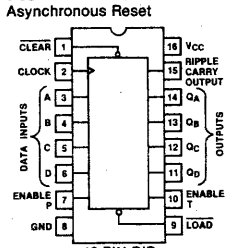

16 PIN DIP
TOP VIEW

SPXXHC162
BCD Decade Counter Synchronous Reset

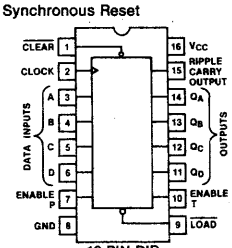

16 PIN DIP
TOP VIEW

SPXXHC176
Presettable Decade Counter

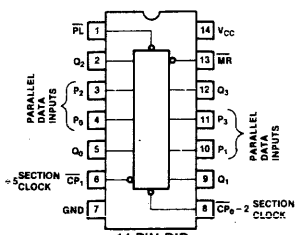

14 PIN DIP
TOP VIEW

SPXXHC192
BCD Decade Up/Down Counter

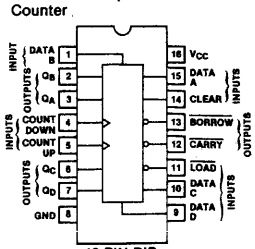

16 PIN DIP
TOP VIEW

© IC MASTER 1984

54/74 Series Flip Flops

SPXXHC73
SPXXHC74
SPXXHC76
SPXXHC107
SPXXHC109
SPXXHC112
SPXXHC113
SPXXHC173
SPXXHC174
SPXXHC175
SPXXHC273
SPXXHC374
SPXXHC574

SPXXHC73
Dual J K Flip-Flops with Clear

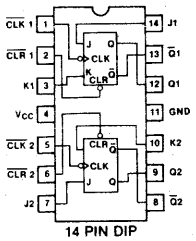

14 PIN DIP
TOP VIEW

SPXXHC74
Dual D Flip-Flops with Set and Clear, Positive Edge Triggered

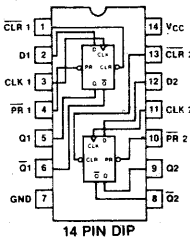

14 PIN DIP
TOP VIEW

SPXXHC76
Dual J K Flip-Flops with Preset and Clear

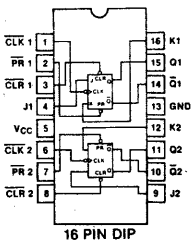

16 PIN DIP
TOP VIEW

SPXXHC107
Dual J K Flip-Flops with Clear

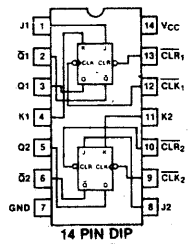

14 PIN DIP
TOP VIEW

SPXXHC109
Dual J K Flip-Flops with Pres Clear, Positive Edge Triggere

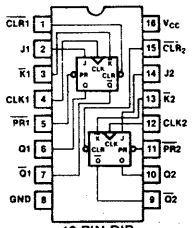

16 PIN DIP
TOP VIEW

SPXXHC112
Dual J K Flip-Flops with Preset and Clear, Negative Edge Triggered

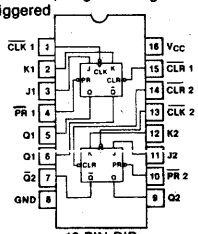

16 PIN DIP
TOP VIEW

SPXXHC113
Dual J K Flip-Flop with Preset, Negative-Edge Triggered

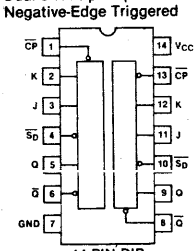

14 PIN DIP
TOP VIEW

SPXXHC173
Quad D-Type Flip-Flop with 3-State Outputs

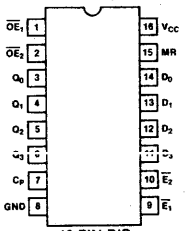

16 PIN DIP
TOP VIEW

SPXXHC174
Hex D-Type Flip-Flops with Common Direct Clear

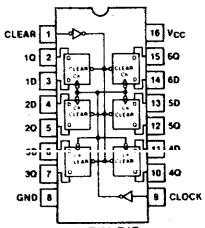

16 PIN DIP
TOP VIEW

SPXXHC175
Quad D-Type Flip-Flops with Common Direct Clear

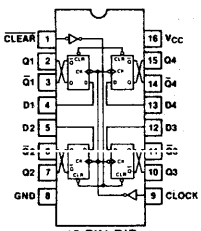

16 PIN DIP
TOP VIEW

SPXXHC273
Octal D-Type Flip-Flop

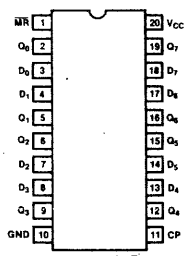

20 PIN DIP
TOP VIEW

SPXXHC374
Octal D-Type Flip-Flop 3-State Outputs

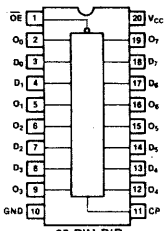

20 PIN DIP
TOP VIEW

SPXXHC574
Octal D-Type Flip-Flop 3-State Outputs

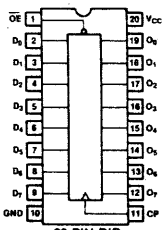

20 PIN DIP
TOP VIEW

54/74 Series 4/8 Input Multiplexers

SPXXHC151
SPXXHC153
SPXXHC251
SPXXHC253

SPXXHC151
8 Input Mulitplexer

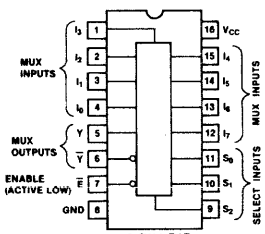

16 PIN DIP
TOP VIEW

SPXXHC153
Dual 4-Input Multiplexer

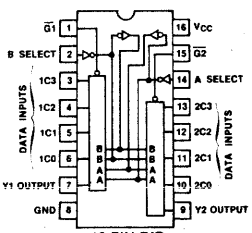

16 PIN DIP
TOP VIEW

SPXXHC251
8-Input Multiplexer, 3-State Outputs

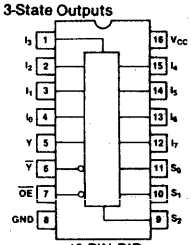

16 PIN DIP
TOP VIEW

SPXXHC253
Dual 4-Input Multiplexer, 3-State Output

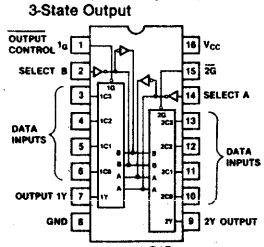

16 PIN DIP
TOP VIEW

54/74 Series Adders/Registers

SPXXHC80
SPXXHC82
SPXXHC298

SPXXHC80
Gated Full Adder

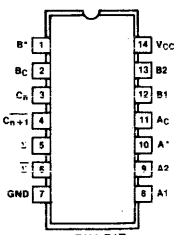

14 PIN DIP
TOP VIEW

SPXXHC82
2-Bit Full Adder

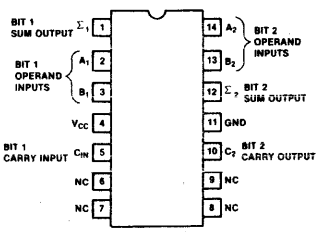

14 PIN DIP
TOP VIEW

SPXXHC298
Quad 2-Port Register

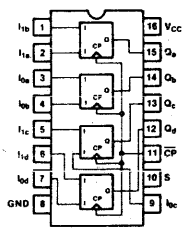

16 PIN DIP
TOP VIEW

© IC MASTER 1984

54/74 Series Binary Counters

SPXXHC93
SPXXHC161
SPXXHC163
SPXXHC177
SPXXHC193

SPXXHC93
4-Bit Binary Counter, Divide-by-2/ Synchronous Divide-by-8

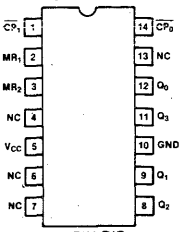

14 PIN DIP
TOP VIEW

SPXXHC161
4-Bit Binary Counter Asynchronous Reset

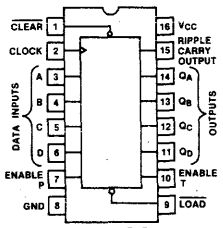

16 PIN DIP
TOP VIEW

SPXXHC163
4-Bit Binary Counter Synchronous Reset

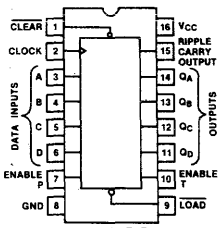

16 PIN DIP
TOP VIEW

SPXXHC177
Presettable Binary Counter

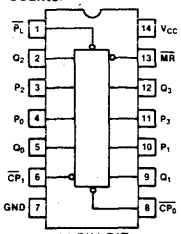

14 PIN DIP
TOP VIEW

SPXXHC193
4-Bit Binary Up/Down Counter

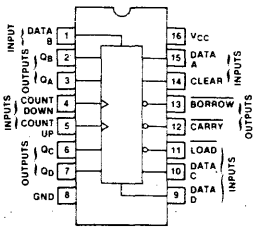

16 PIN DIP
TOP VIEW

54/74 Series Parity Generators/ Checkers

SPXXHC280

SPXXHC280
9-Bit Odd/Even Parity Generator/Checker

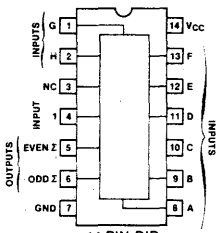

14 PIN DIP
TOP VIEW

54/74 Series Decoders/ Demultiplexers

SPXXHC42
SPXXHC138
SPXXHC139

SPXXHC42
1-of-10 BCD-to-Decimal Decoder

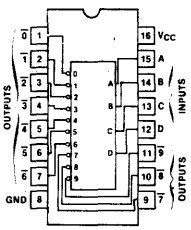

16 PIN DIP
TOP VIEW

SPXXHC138
1-of-8 Decoder/ Demultiplexer

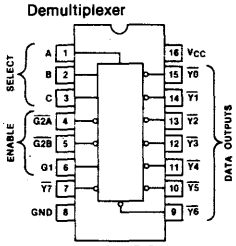

16 PIN DIP
TOP VIEW

SPXXHC139
Dual 1-of-4 Decoder/ Demultiplexer

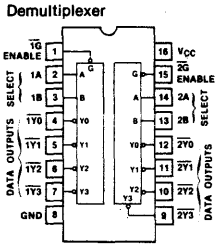

16 PIN DIP
TOP VIEW

54/74 Series Inverters/Buffers

SPXXHC04
SPXXHC14
SPXXHC125
SPXXHC126
SPXXHC244

SPXXHC04
Hex Inverter

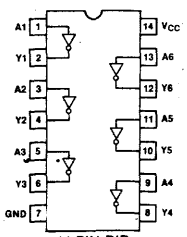

14 PIN DIP
TOP VIEW

SPXXHC14
Hex Schmitt Trigger Inverter

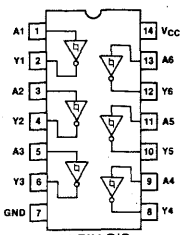

14 PIN DIP
TOP VIEW

SPXXHC125
Quad 3-State Buffers with Active Low Enables

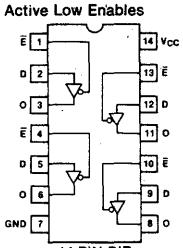

14 PIN DIP
TOP VIEW

SPXXHC126
Quad 3-State Buffers with Active High Enables

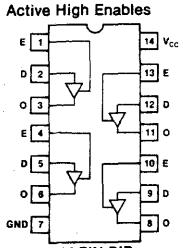

14 PIN DIP
TOP VIEW

SPXXHC244
3-State Octal Buffers

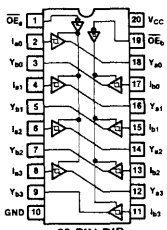

20 PIN DIP
TOP VIEW

DIGITAL

Semi Processes, Inc.

© IC MASTER 1984

SP74HC SERIES AC SWITCHING CHARACTERISTICS ($V_{CC} = 5.0V$, $t_r = t_f = 6ns$, $T_A = 25°C$, unless otherwise specified)

Device Type	Symbol	Parameter	Conditions	Typ	Guaranteed Limit	Units
73	t_{PHL}, t_{PLH}	Clock to Q	$C_L = 15pF$ $C_L = 50pF$	15 17		ns
	t_{PHL}, t_{PLH}	Clock to Q	$C_L = 15pF$ $C_L = 50pF$	17 19		ns
	t_w	Min. Clock Pulse Width Low		10		ns
	t_w	Min. Set Pulse Width High		10		
	f_{max}	Maximum Clock Frequency		40		MHz
	C_{in}	Input Capacitance		2		pF
74, 273	t_{PHL}, t_{PLH}	Clock to Q	$C_L = 15pF$ $C_L = 50pF$	18 20		ns
	t_{PHL}, t_{PLH}	Set/Reset to Q	$C_L = 15pF$ $C_L = 50pF$	20 22		ns
	t_w	Minimum Clock Pulse Width		8		ns
	f_{max}	Maximum Clock Frequency		40		Mhz
	C_{in}	Input Capacitance		2		pF
76	t_{PHL}, t_{PLH}	Clock to Q	$C_L = 15pF$ $C_L = 50pF$	19 21		ns
	t_{PHL}, t_{PLH}	Clock to Q	$C_L = 15pF$ $C_L = 50pF$	19 21		ns
	t_{PHL}, t_{PLH}	Set to Q	$C_L = 15pF$ $C_L = 50pF$	23 25		ns
	t_w	Minimum Clock Pulse Width		7		ns
	f_{max}	Maximum Clock Frequency		10		MHz
	C_{in}	Input Capacitance		2		pF
107	t_{PHL}, t_{PLH}	Clock to Q	$C_L = 15pF$ $C_L = 50pF$	20 22		ns
	t_{PHL}, t_{PLH}	Reset to Q	$C_L = 15pF$ $C_L = 50pF$	25 27		ns
	f_{max}	Maximum Clock Frequency		50		Mhz
	C_{in}	Input Capacitance		2		pF
109	t_{PHL}, t_{PLH}	Clock to Q	$C_L = 15pF$ $C_L = 50pF$	16 18		ns
	t_{PHL}, t_{PLH}	Clock to $\overline{Q}$	$C_L = 15pF$ $C_L = 50pF$	15 17		ns
	t_{PHL}, t_{PLH}	Set to Q	$C_L = 15pF$ $C_L = 50pF$	21 23		ns
	t_{PHL}, t_{PLH}	Clear to Q	$C_L = 15pF$ $C_L = 50pF$	20 22		ns
	t_w	Minimum Clock Pulse Width		6		ns
	t_w	Minimum Set Pulse Width		14		
	f_{max}	Maximum Clock Frequency		40		MHz
	C_{in}	Input Capacitance		2		pF
112	t_{PHL}, t_{PLH}	Clock to Q	$C_L = 15pF$ $C_L = 50pF$	16 18		ns
	t_{PHL}, t_{PLH}	$\overline{SD}$ to Q	$C_L = 15pF$ $C_L = 50pF$	19 21		ns
	t_{PHL}, t_{PLH}	RD to Q	$C_L = 15pF$ $C_L = 50pF$	20 22		ns
	t_w	Minimum Clock Pulse Width		8		ns
	f_{max}	Maximum Clock Frequency		40		Mhz
	C_{in}	Input Capacitance		2		pF

Device Type	Symbol	Parameter	Conditions	Typ	Guaranteed Limit	Units
113	t_{PHL}, t_{PLH}	Clock to Q_A	$C_L = 15pF$ $C_L = 50pF$	24 26		ns
	t_{PHL}, t_{PLH}	Clock to $\overline{Q}_A$	$C_L = 15pF$ $C_L = 50pF$	22 24		ns
	t_{PHL}, t_{PLH}	Clock to Q_B	$C_L = 15pF$ $C_L = 50pF$	22 24		ns
	t_{PHL}, t_{PLH}	Clock to $\overline{Q}_B$	$C_L = 15pF$ $C_L = 50pF$	22 24		ns
	t_w	Minimum Clock Pulse Width		7		ns
	t_w	Minimum Set Pulse Width		8		
	f_{max}	Maximum Clock Frequency		40		MHz
	C_{in}	Input Capacitance		2		pF
173	t_{PHL}, t_{PLH}	Clock to Q	$C_L = 15pF$ $C_L = 50pF$	23 25		ns
	t_w	Minimum Clock Pulse Width		10		ns
	f_{max}	Maximum Clock Frequency		50		MHz
	C_{in}	Input Capacitance		2		pF
174	t_{PHL}, t_{PLH}	Clock to Output	$C_L = 15pF$ $C_L = 50pF$	25 27		ns
	t_{PHL}, t_{PLH}	$\overline{MR}$ to Output	$C_L = 15pF$ $C_L = 50pF$	25 27		ns
	t_w	Minimum Clock Pulse Width		9		ns
	t_w	Minimum $\overline{MR}$ Pulse Width		8		
	f_{max}	Maximum Clock Frequency		40		MHz
	C_{in}	Input Capacitance		2		pF
175	t_{PHL}, t_{PLH}	Clock to Q	$C_L = 15pF$ $C_L = 50pF$	18 21		ns
	t_{PHL}, t_{PLH}	$\overline{MR}$ to Q	$C_L = 15pF$ $C_L = 50pF$	15 18		ns
	t_{PHL}, t_{PLH}	$\overline{MR}$ to $\overline{Q}$	$C_L = 15pF$ $C_L = 50pF$	20 22		ns
	t_w	Minimum Clock Pulse Width		8		ns
	t_w	Minimum $\overline{MR}$ Pulse Width		7		
	f_{max}	Maximum Clock Frequency		40		Mhz
	C_{in}	Input Capacitance		2		pF
374	t_{PHL}, t_{PLH}	Clock to Output	$C_L = 15pF$ $C_L = 50pF$	23 26		ns
	t_{PZL}, t_{PZL}	Enable to High/Low	$C_L = 15pF$ $C_L = 50pF$	14 17		ns
	t_{PHZ}, t_{PLZ}	Disable from High/Low	$C_L = 15pF$ $C_L = 50pF$	14 17		ns
	f_{max}	Maximum Clock Frequency		30		MHz
	C_{in}	Input Capacitance		2		pF
574	t_{PHL}, t_{PLH}	Clock to Output	$C_L = 15pF$ $C_L = 50pF$	17 20		ns
	t_{PHL}, t_{PLH}	Enable to High/Low	$C_L = 15pF$ $C_L = 50pF$	19 22		ns
	t_{PHL}, t_{PLH}	Disable from High/Low	$C_L = 15pF$ $C_L = 50pF$	18 21		ns
	f_{max}	Maximum Clock Frequency		30		MHz
	C_{in}	Input Capacitance		2		pF

Device Type	Symbol	Parameter	Conditions	Typ	Guaranteed Limit	Units
151	t_{PHL}, t_{PLH}	Select to Y	$C_L = 15pF$ $C_L = 50pF$	31 34		ns
	t_{PHL}, t_{PLH}	Select to $\overline{Y}$	$C_L = 15pF$ $C_L = 50pF$	30 33		ns
	t_{PHL}, t_{PLH}	Data to Y	$C_L = 15pF$ $C_L = 50pF$	28 31		ns
	t_{PHL}, t_{PLH}	Data to $\overline{Y}$	$C_L = 15pF$ $C_L = 50pF$	26 29		ns
	t_{PHL}, t_{PLH}	Enable to Y	$C_L = 15pF$ $C_L = 50pF$	14 16		ns
	t_{PHL}, t_{PLH}	Enable to $\overline{Y}$	$C_L = 15pF$ $C_L = 50pF$	16 19		ns
	C_{in}	Input Capacitance		2		pF
153	t_{PHL}, t_{PLH}	Select to Y	$C_L = 15pF$ $C_L = 50pF$	16 18		ns
	t_{PHL}, t_{PLH}	Enable to Y	$C_L = 15pF$ $C_L = 50pF$	12 14		ns
	t_{PHL}, t_{PLH}	Data to Y	$C_L = 15pF$ $C_L = 50pF$	16 18		ns
	C_{in}	Input Capacitance		2		pF
251	t_{PHL}, t_{PLH}	Data to Y	$C_L = 15pF$ $C_L = 50pF$	29 33		ns
	t_{PHL}, t_{PLH}	Data to $\overline{Y}$	$C_L = 15pF$ $C_L = 50pF$	31 35		ns
	t_{PHL}, t_{PLH}	Select to Y	$C_L = 15pF$ $C_L = 50pF$	34 38		ns
	t_{PHL}, t_{PLH}	Select to Y	$C_L = 15pF$ $C_L = 50pF$	35 38		ns
	t_{PHZ}, t_{PLZ}	Disable from High/Low	$C_L = 15pF$ $C_L = 50pF$	13 16		ns
	t_{PZH}, t_{PZL}	Enable to High/Low	$C_L = 15pF$ $C_L = 50pF$	18 21		ns
	C_{IN}	Input Capacitance		2		pF
253	t_{PHL}, t_{PLH}	Data to Q	$C_L = 15pF$ $C_L = 50pF$	17 20		ns
	t_{PHL}, t_{PLH}	Select to Q	$C_L = 15pF$ $C_L = 50pF$	22 24		ns
	t_{PZH}, t_{PZL}	Enable to High/Low	$C_L = 15pF$ $C_L = 50pF$	16 20		ns
	t_{PHZ}, t_{PLZ}	Disable from High/Low	$C_L = 15pF$ $C_L = 50pF$	13 17		ns
	C_{in}	Input Capacitance		2		pF

Device Type	Symbol	Parameter	Conditions	Typ	Guaranteed Limit	Units
240, 241	t_{PHL}, t_{PLH}	Data to Output	$C_L = 15pF$ $C_L = 50pF$	15 17		ns
	t_{PZH}, t_{PZL}	Enable to High/Low	$C_L = 15pF$ $C_L = 50pF$	20 22		ns
	t_{PHZ}, t_{PLZ}	Disable from High/Low	$C_L = 15pF$ $C_L = 50pF$	16 18		ns
365	t_{PHL}, t_{PLH}	Data to Output	$C_L = 15pF$ $C_L = 50pF$	15 18		ns
	t_{PZH}, t_{PZL}	Enable to High/Low	$C_L = 15pF$ $C_L = 50pF$	22 24		ns
	t_{PHZ}, t_{PLZ}	Disable from High/Low	$C_L = 15pF$ $C_L = 50pF$	20 22		ns
540	t_{PHL}, t_{PLH}	Data to Output	$C_L = 15pF$ $C_L = 50pF$	15 17		ns
	t_{PZH}, t_{PZL}	Enable to High/Low	$C_L = 15pF$ $C_L = 50pF$	26 28		ns
	t_{PHZ}, t_{PLZ}	Disable from High/Low	$C_L = 15pF$ $C_L = 50pF$	20 22		ns
541	t_{PHL}, t_{PLH}	Data to Output	$C_L = 15pF$ $C_L = 50pF$	19 21		ns
	t_{PZH}, t_{PZL}	Enable to High/Low	$C_L = 15pF$ $C_L = 50pF$	26 28		ns
	t_{PHZ}, t_{PLZ}	Disable from High/Low	$C_L = 15pF$ $C_L = 50pF$	22 24		ns

Device Types	Symbol	Parameter	Conditions	Typ	Guaranteed Limit	Units
00	t_{PHL}, t_{PLH}	Maximum Propagation Delay Any Input to Output	$C_L = 15pF$ $C_L = 50pF$	11 13		ns
08	t_{PHL}, t_{PLH}	Maximum Propagation Delay Any Input to Output	$C_L = 15pF$ $C_L = 50pF$	16 18		ns
10, 133	t_{PHL}, t_{PLH}	Maximum Propagation Delay Any Input to Output	$C_L = 15pF$ $C_L = 50pF$	13 16		ns
11	t_{PHL}, t_{PLH}	Maximum Propagation Delay Any Input to Output	$C_L = 15pF$ $C_L = 50pF$	14 16		ns
20, 30, 132	t_{PHL}, t_{PLH}	Maximum Propagation Delay Any Input to Output	$C_L = 15pF$ $C_L = 50pF$	17 20		ns
	C_{IN}	Maximum Input Capacitance		2		pF

© IC MASTER 1984

SP74HC SERIES AC SWITCHING CHARACTERISTICS (V_{CC} = 5.0V, $t_r = t_f$ = 6ns, T_A = 25°C, unless otherwise specified)

Device Type	Symbol	Parameter	Conditions	Typ	Guaranteed Limit	Units
93	t_{PHL}, t_{PLH}	$\overline{C}_{P0}$ to Q_0	C_L = 15pF C_L = 50pF	19 21		ns
	t_{PHL}, t_{PLH}	$\overline{C}_{P1}$ to Q_1	C_L = 15pF C_L = 50pF	21 23		ns
	t_{PHL}, t_{PLH}	$\overline{C}_{P0}$ to Q_3	C_L = 15pF C_L = 50pF	37 40		ns
	t_{PHL}	M_R to Q_0	C_L = 15pF C_L = 50pF	25 27		ns
	t_{PHL}	M_R to Q_1	C_L = 15pF C_L = 50pF	24 26		ns
	t_{PHL}	M_{R1} to Q_2	C_L = 15pF C_L = 50pF	24 26		ns
	t_{PHL}	M_R to Q_3	C_L = 15pF C_L = 50pF	24 26		ns
	f_{max}	$\overline{C}_{P0}$ to $\overline{C}_{P1}$		30		MHz
	t_w	Minimum Clock Pulse Width		10		ns
	t_w	Minimum Reset Low Pulse Width		9		ns
161	t_{PHL}, t_{PLH}	Clock to Q_0	C_L = 15pF C_L = 50pF	17 20		ns
	t_{PHL}, t_{PLH}	Clock to Q_1	C_L = 15pF C_L = 50pF	18 21		ns
	t_{PHL}, t_{PLH}	Clock to Q_2	C_L = 15pF C_L = 50pF	19 22		ns
	t_{PHL}, t_{PLH}	Clock to Q_3	C_L = 15pF C_L = 50pF	21 24		ns
	t_{PHL}, t_{PLH}	Clock to T_C	C_L = 15pF C_L = 50pF	28 33		ns
	t_{PHL}, t_{PLH}	Set to T_C	C_L = 15pF C_L = 50pF	18 21		ns
	f_{max}	Max Clock Frequency		40		MHz
	t_w	Minimum Clock Pulse Width		8		ns
163	t_{PHL}, t_{PLH}	Clock to Output $\overline{PE}$ = High	C_L = 15pF C_L = 50pF	23 26		ns
	t_{PHL}, t_{PLH}	Clock to Output $\overline{PE}$ = High	C_L = 15pF C_L = 50pF	23 26		ns
	t_{PHL}, t_{PLH}	Clock to TC	C_L = 15pF C_L = 50pF	35 40		ns
	t_{PHL}, t_{PLH}	CET to TC	C_L = 15pF C_L = 50pF	30 35		ns
	f_{max}	Maximum Clock Frequency		40		Mhz
	t_w	Minimum Clock Width		8		ns
177	t_{PHL}, t_{PLH}	C_{P1} to Q_A	C_L = 15pF C_L = 50pF	22 25		ns
	t_{PHL}, t_{PLH}	C_{P2} to Q_B	C_L = 15pF C_L = 50pF	31 35		ns
	t_{PHL}, t_{PLH}	C_{P2} to Q_C	C_L = 15pF C_L = 50pF	26 28		ns
	t_{PHL}, t_{PLH}	C_{P2} to Q_D	C_L = 15pF C_L = 50pF	28 30		ns
	t_{PHL}, t_{PLH}	D_A to Q_A	C_L = 15pF C_L = 50pF	22 24		ns
	t_{PHL}, t_{PLH}	D_B to Q_B	C_L = 15pF C_L = 50pF	27 31		ns
	t_{PHL}, t_{PLH}	D_C to Q_C	C_L = 15pF C_L = 50pF	24 26		ns
	t_{PHL}, t_{PLH}	D_D to Q_D	C_L = 15pF C_L = 50pF	25 27		ns
	t_{PHL}, t_{PLH}	CLR to Q_A	C_L = 15pF C_L = 50pF	25 27		ns
	t_{PHL}, t_{PLH}	CLR to Q_B	C_L = 15pF C_L = 50pF	29 31		ns
	t_{PHL}, t_{PLH}	CLR to Q_C	C_L = 15pF C_L = 50pF	27 29		ns
	t_{PHL}, t_{PLH}	CLR to Q_D	C_L = 15pF C_L = 50pF	28 30		ns
	f_{max}			45		MHz
	t_w			10		ns
193	t_{PHL}, t_{PLH}	C_{PU} to $\overline{T}_{CU}$	C_L = 15pF C_L = 50pF	25 28		ns
	t_{PHL}, t_{PLH}	C_{PD} to $\overline{T}_{CD}$	C_L = 15pF C_L = 50pF	25 28		ns
	t_{PHL}, t_{PLH}	C_{PU} or C_{PD} to Q_n	C_L = 15pF C_L = 50pF	28 31		ns
	t_{PHL}, t_{PLH}	$\overline{P}_L$ to Q_n	C_L = 15pF C_L = 50pF	16 19		ns
	t_{PHL}	M_R to Output	C_L = 15pF C_L = 50pF	13 16		ns
	f_{max}	Maximum Clock Frequency		40		MHz
	t_w	Minimum Clock Pulse Width		10		ns

Device Typ	Symbol	Parameter	Conditions	Typ	Guaranteed Limit	Units
393	t_{PHL}, t_{PLH}	Clock to Q_0	C_L = 15pF C_L = 50pF	24 26		ns
	t_{PHL}, t_{PLH}	Clock to Q_1	C_L = 15pF C_L = 50pF	25 27		ns
	t_{PHL}, t_{PLH}	Clock to Q_2	C_L = 15pF C_L = 50pF	25 27		ns
	t_{PHL}, t_{PLH}	Clock to Q_3	C_L = 15pF C_L = 50pF	24 26		ns
	t_w	Min. Clock Pulse Width		10		ns
	f_{max}	Max. Clock Frequency		30		MHz
	C_{IN}	Input Capacitance		2		pF
4020, 4017	t_{PHL}, t_{PLH}	Clock to Q_1	C_L = 15pF C_L = 50pF	24 26		ns
	t_{PHL}, t_{PLH}	Clock to Q_4	C_L = 15pF C_L = 50pF	44 50		ns
	t_{PHL}, t_{PLH}	Q_n to Q_{n+1}	C_L = 15pF C_L = 50pF	10 13		ns
	t_{PHL}	Reset to Q_n	C_L = 15pF	25		ns
	t_w	Min. Clock Pulse Width		10		ns
	t_w	Min. Reset Pulse Width		13		ns
	t_r	Output Rise Time		6		ns
	t_f	Output Fall Time		4		ns
	f_{max}	Max. Clock Frequency		45		MHz

Device Typ	Symbol	Parameter	Conditions	Typ	Guaranteed Limit	Units
80	t_{PHL}, t_{PLH}	A_C to Σ	C_L = 15pF C_L = 50pF	23 25		ns
	t_{PHL}, t_{PLH}	B_C to Σ	C_L = 15pF C_L = 50pF	33 35		ns
	t_{PHL}, t_{PLH}	B_C to C_N + 1	C_L = 15pF C_L = 50pF	22 25		ns
	t_{PHL}, t_{PLH}	C_N to C_N + 1	C_L = 15pF C_L = 50pF	19 21		ns
	C_{IN}	Input Capacitance		2		pF
82	t_{PHL}, t_{PLH}	IC_0 to Σ_1	C_L = 15pF C_L = 50pF	17 19		ns
	t_{PHL}, t_{PLH}	C_0 to Σ_2	C_L = 15pF C_L = 50pF	32 35		ns
	t_{PHL}, t_{PLH}	C_0 to C_2	C_L = 15pF C_L = 50pF	[illegible] 33		ns
	t_{PHL}, t_{PLH}	B_2 to Σ_2	C_L = 15pF C_L = 50pF	21 23		ns
	C_{IN}	Input Capacitance		2		pF
298	t_{PHL}, t_{PLH}	Clock to Q_n	C_L = 15pF C_L = 50pF	20 23		ns
	C_{IN}	Input Capacitance		2		pF

Device Type	Symbol	Parameter	Conditions	Typ	Guaranteed Limit	Units
90	t_{PHL}, t_{PLH}	$\overline{C}_{P0}$ to Q_0	C_L = 15pF C_L = 50pF	24 26		ns
	t_{PHL}, t_{PLH}	$\overline{C}_{P0}$ to Q_3	C_L = 15pF C_L = 50pF	46 50		ns
	t_{PHL}, t_{PLH}	$\overline{C}_{P1}$ to Q_1	C_L = 15pF C_L = 50pF	26 28		ns
	t_{PHL}, t_{PLH}	$\overline{C}_{P1}$ to Q_3	C_L = 15pF C_L = 50pF	26 28		ns
	t_{PHL}, t_{PLH}	M_S to Q_0	C_L = 15pF C_L = 50pF	25 27		ns
	t_{PHL}, t_{PLH}	M_S to Q_3	C_L = 15pF C_L = 50pF	26 28		ns
	t_{PHL}, t_{PLH}	M_R to All Q's	C_L = 15pF C_L = 50pF	32 35		ns
	f_{max}			30		MHz
	t_w			10		ns
	C_{IN}			2		pF
160 162	t_{PHL}, t_{PLH}	Clock to Q	C_L = 15pF C_L = 50pF	20 22		ns
	t_{PHL}, t_{PLH}	Clear to Q	C_L = 15pF C_L = 50pF	20 22		ns
	t_{PHL}, t_{PLH}	Clock to Carry	C_L = 15pF C_L = 50pF	20 22		ns
	f_{max}			40		MHz
	C_{IN}			2		pF
176	t_{PHL}, t_{PLH}	C_{P1} to Q_A	C_L = 15pF C_L = 50pF	21 23		ns
	t_{PHL}, t_{PLH}	C_{P2} to Q_B	C_L = 15pF C_L = 50pF	29 31		ns
	t_{PHL}, t_{PLH}	C_{P2} to Q_D	C_L = 15pF C_L = 50pF	27 29		ns
	t_{PHL}, t_{PLH}	D_A to Q_A	C_L = 15pF C_L = 50pF	21 23		ns
	t_{PHL}, t_{PLH}	D_D to Q_D	C_L = 15pF C_L = 50pF	23 25		ns
	t_{PHL}, t_{PLH}	C_{LR} to Q_A	C_L = 15pF C_L = 50pF	27 29		ns
	t_{PHL}, t_{PLH}	C_{LR} to Q_D	C_L = 15pF C_L = 50pF	27 29		ns
	t_w	CP_1 Pulse Width Minimum		10		ns
	f_{max}	Maximum Clock Frequency		60		MHz
	C_{IN}	Input Capacitance		2		pF
192	t_{PHL}, t_{PLH}	C_{PU} or C_{PD} to Q_n	C_L = 15pF C_L = 50pF	28 31		ns
	t_{PHL}, t_{PLH}	C_{PU} to $\overline{TC}_u$	C_L = 15pF C_L = 50pF	23 26		ns
	t_{PHL}, t_{PLH}	C_{PD} to $\overline{TC}_D$	C_L = 15pF C_L = 50pF	24 27		ns
	t_{PHL}, t_{PLH}	P_n to Q_n	C_L = 15pF C_L = 50pF	25 28		ns
	t_{PHL}, t_{PLH}	$\overline{PL}$ to Q_n	C_L = 15pF C_L = 50pF	33 36		ns
	t_{PHL}	$\overline{MR}$ to Q_n	C_L = 50pF	33		ns
	C_{IN}	Input Capacitance		2		pF

Device Type	Symbol	Parameter	Conditions	Typ	Guaranteed Limit	Units
42	t_{PHL}, t_{PLH}	Input to Output 2-Level	C_L = 15pF C_L = 50pF	21 23		ns
	t_{PHL}, t_{PLH}	Input to Output 3-Level	C_L = 15pF C_L = 50pF	25 27		ns
	C_{IN}	Input Capacitance		2		pF
138	t_{PHL}, t_{PLH}	Input to O_0, O_6	C_L = 15pF C_L = 50pF	23 25		ns
	t_{PHL}, t_{PLH}	Input to O_1	C_L = 15pF C_L = 50pF	18 20		ns
	t_{PHL}, t_{PLH}	Enable to Output	C_L = 15pF C_L = 50pF	23 25		ns
	C_{IN}	Input Capacitance		2		pF
139	t_{PHL}, t_{PLH}	A to Q	C_L = 15pF C_L = 50pF	15 17		ns
	t_{PHL}, t_{PLH}	Enable to Q	C_L = 15pF C_L = 50pF	11 13		ns
	f_{max}	Max Frequency		30		MHz
	C_{IN}	Input Capacitance		2		pF

© IC MASTER 1984

SP74HC SERIES AC SWITCHING CHARACTERISTICS (V_{CC} = 5.0V, $t_r = t_f$ = 6ns, T_A = 25°C, unless otherwise specified)

Device Type	Symbol	Parameter	Conditions	Typ	Guaranteed Limit	Units
75	t_{PHL}, t_{PLH}	Data to Q	C_L = 15pF C_L = 50pF	15 17		ns
	t_{PHL}, t_{PLH}	Data to $\overline{Q}$	C_L = 15pF C_L = 50pF	18 20		ns
	t_{PHL}, t_{PLH}	Enable to Q	C_L = 15pF C_L = 50pF	15 17		ns
	t_{PHL}, t_{PLH}	Enable to $\overline{Q}$	C_L = 15pF C_L = 50pF	18 20		ns
	C_{IN}	Input Capacitance		2		pF
77	t_{PHL}, t_{PLH}	Data to Q	C_L = 15pF C_L = 50pF	20 23		ns
	t_{PHL}, t_{PLH}	Enable to Q	C_L = 15pF C_L = 50pF	20 23		ns
	t_W	Enable Pulse Width Minimum		10		ns
	C_{IN}	Input Capacitance		2		pF
373	t_{PHL}, t_{PLH}	Data to Output	C_L = 15pF C_L = 50pF	30 33		ns
	t_{PHL}, t_{PLH}	Latch Enable to Output	C_L = 15pF C_L = 50pF	40 44		ns
	t_{PZH}, t_{PZL}	Enable to High/Low	C_L = 15pF C_L = 50pF	34 38		ns
	t_{PHZ}, t_{PLZ}	Disable from High/Low	C_L = 15pF C_L = 50pF	24 27		ns
	C_{IN}	Input Capacitance		2		pF
533	t_{PHL}, t_{PLH}	Data to Output	C_L = 15pF C_L = 50pF	30 33		ns
	t_{PHL}, t_{PLH}	Latch Enable to Output	C_L = 15pF C_L = 50pF	40 44		ns
	t_{PZH}, t_{PZL}	Enable to High/Low	C_L = 15pF C_L = 50pF	34 38		ns
	t_{PHZ}, t_{PLZ}	Disable from High/Low	C_L = 15pF C_L = 50pF	24 27		ns
	C_{IN}	Input Capacitance		2		pF
573	t_{PHL}, t_{PLH}	Data to Output	C_L = 15pF C_L = 50pF	30 33		ns
	t_{PHL}, t_{PLH}	Latch Enable to Output	C_L = 15pF C_L = 50pF	40 44		ns
	t_{PZH}, t_{PZL}	Enable to High/Low	C_L = 15pF C_L = 50pF	34 38		ns
	t_{PHZ}, t_{PLZ}	Disable from High/Low	C_L = 15pF C_L = 50pF	24 27		ns
	C_{IN}	Input Capacitance		2		pF

Device Type	Symbol	Parameter	Conditions	Typ	Guaranteed Limit	Units
157	t_{PHL}, t_{PLH}	Data to Output	C_L = 15pF C_L = 50pF	18 20		ns
	t_{PHL}, t_{PLH}	Enable to Output	C_L = 15pF C_L = 50pF	15 17		ns
	t_{PHL}, t_{PLH}	Select to Output	C_L = 15pF C_L = 50pF	21 23		ns
	C_{IN}	Input Capacitance		2		pF
158	t_{PHL}, t_{PLH}	Data to Output	C_L = 15pF C_L = 50pF	17 19		ns
	t_{PHL}, t_{PLH}	Enable to Output	C_L = 15pF C_L = 50pF	16 18		ns
	t_{PHL}, t_{PLH}	Select to Output	C_L = 15pF C_L = 50pF	15 17		ns
	C_{IN}	Input Capacitance		2		pF
257	t_{PHL}, t_{PLH}	Data to Output	C_L = 15pF C_L = 50pF	21 23		ns
	t_{PHL}, t_{PLH}	Select to Output	C_L = 15pF C_L = 50pF	26 29		ns
	t_{PZH}, t_{PZL}	Enable to High/Low	C_L = 15pF C_L = 50pF	19 21		ns
	t_{PHZ}, t_{PLZ}	Disable from High/Low	C_L = 15pF C_L = 50pF	15 17		ns
	C_{in}	Input Capacitance		2		pF
258	t_{PHL}, t_{PLH}	I_n to $\overline{Z}_n$	C_L = 15pF C_L = 50pF	15 18		ns
	t_{PHL}, t_{PLH}	S to $\overline{Z}_n$	C_L = 15pF C_L = 50pF	20 23		ns
	t_{PZH}, t_{PZL}	Enable to High/Low	C_L = 15pF C_L = 50pF	17 20		ns
	t_{PHZ}, t_{PLZ}	Disable from High/Low	C_L = 15pF C_L = 50pF	10 13		ns
	C_{IN}	Input Capacitance		2		pF

Device Type	Symbol	Parameter	Conditions	Typ	Guaranteed Limit	Units
280	t_{PHL}, t_{PLH}	Input to Output Delay—Odd	C_L = 15pF C_L = 50pF	35 37		ns
	t_{PHL}, t_{PLH}	Input to Output Delay—Even	C_L = 15pF C_L = 50pF	35 37		ns
	C_{IN}	Input Capacitance		2		pF

Device Type	Symbol	Parameter	Conditions	Typ	Guaranteed Limit	Units
147	t_{PHL}, t_{PLH}	Input to Output Delay Inverting	C_L = 15pF C_L = 50pF	26 28		ns
	t_{PHL}, t_{PLH}	Input to Output Delay Non-Inverting	C_L = 15pF C_L = 50pF	27 29		ns
	C_{IN}	Input Capacitance		2		pF
148	t_{PHL}, t_{PLH}	I_n to A_n	C_L = 15pF C_L = 50pF	25 28		ns
	t_{PHL}, t_{PLH}	I_n to E_0	C_L = 15pF C_L = 50pF	23 25		ns
	t_{PHL}, t_{PLH}	I_n to G_s	C_L = 15pF C_L = 50pF	26 28		ns
	t_{PHL}, t_{PLH}	E_1 to A_n	C_L = 15pF C_L = 50pF	18 20		ns
	t_{PHL}, t_{PLH}	E_1 to E_0	C_L = 15pF C_L = 50pF	18 20		ns
	t_{PHL}, t_{PLH}	E_1 to G_s	C_L = 15pF C_L = 50pF	18 20		ns
	C_{IN}	Input Capacitance		2		pF

Device Types	Symbol	Parameter	Conditions	Typ	Guaranteed Limit	Units
02	t_{PHL}, t_{PLH}	Maximum Propagation Delay Any Input to Output	C_L = 15pF C_L = 50pF	13 15		ns
27	t_{PHL}, t_{PLH}	Maximum Propagation Delay Any Input to Output	C_L = 15pF C_L = 50pF	18 20		ns
32	t_{PHL}, t_{PLH}	Maximum Propagation Delay Any Input to Output	C_L = 15pF C_L = 50pF	16 18		ns
86, 266	t_{PHL}, t_{PLH}	Maximum Propagation Delay Any Input to Output	C_L = 15pF C_L = 50pF	20 22		ns
	C_{IN}	Maximum Input Capacitance		2		pF

Device Type	Symbol	Parameter	Conditions	Typ	Guaranteed Limit	Units
04	t_{PHL}, t_{PLH}	Input to Output Delay	C_L = 15pF C_L = 50pF	12 14		ns
	C_{IN}	Input Capacitance		2		pF
14	t_{PHL}, t_{PLH}	Input to Output Delay	C_L = 15pF C_L = 50pF	16 18		ns
	C_{IN}	Input Capacitance		2		pF
125	t_{PHL}, t_{PLH}	Input to Output Delay	C_L = 15pF C_L = 50pF	12 14		ns
	t_{PZH}, t_{PZL}	Enable to High/Low	C_L = 15pF C_L = 50pF	12 14		ns
	t_{PHZ}, t_{PLZ}	Disable from High/Low	C_L = 15pF C_L = 50pF	12 14		ns
	C_{IN}	Input Capacitance		2		pF
126	t_{PHL}, t_{PLH}	Input to Output Delay	C_L = 15pF C_L = 50pF	16 18		ns
	t_{PZH}, t_{PZL}	Enable to High/Low	C_L = 15pF C_L = 50pF	13 15		ns
	t_{PHZ}, t_{PLZ}	Disable from High/Low	C_L = 15pF C_L = 50pF	13 15		ns
	C_{IN}	Input Capacitance		2		pF
244	t_{PHL}, t_{PLH}	Input to Output Delay	C_L = 15pF C_L = 50pF	16 18		ns
	t_{PZH}, t_{PZL}	Enable to High/Low	C_L = 15pF C_L = 50pF	20 23		ns
	t_{PHZ}, t_{PLZ}	Disable from High/Low	C_L = 15pF C_L = 50pF	18 20		ns
	C_{IN}	Input Capacitance		2		pF

© IC MASTER 1984

Signetics

Your Total LOGIC Supplier

FAST
Low Power Schottky
Schottky
Standard TTL
High Speed CMOS
4000B CMOS
100K ECL
10K ECL
SO Packages

signetics
a subsidiary of U.S. Philips Corporation

Signetics Corporation
811 E. Arques Avenue
P.O. Box 3409
Sunnyvale, California 94088-3409
Telephone 408/739-7700

10K & 100K ECL PRODUCT LIST

10K ECL

DEVICE TYPE	DESCRIPTION
10100	Quad 2-Input NOR Gate
10101	Quad OR/NOR Gate
10102	Quad 2-Input NOR Gate
10103	Quad 2-Input OR Gate
10104	Quad 2-Input AND Gate
10105	Triple 2-3-2 Input OR/NOR Gate
10106	Triple 4-3-3 Input NOR Gate
10107	Triple 2-Input Exclusive-OR/Exclusive-NOR Gate
10108	Dual 3-Input AND/NAND Gate
10109	Dual 4-5 Input OR/NOR Gate
10110	Dual 3-Input/3-Output OR Gate (Line Driver)
10111	Dual 3-Input/3-Output NOR Gate (Line Driver)
10112	Dual 3-Input/3-Output (1 OR and 2 NOR) (Line Driver)
10113	Quad Exclusive-OR Gate with Enable
10114	Triple Line Receiver
10115	Quad Line Receiver
10116	Triple Line Receiver
10117	Dual 2-Wide 2-3 Input OR-AND/OR-AND-INVERT Gate
10118	Dual 2-Wide 3-Input OR-AND Gate
10119	4-Wide 4-3-3-3 Input OR-AND Gate
10121	4-Wide OR-AND/OR-AND-INVERT Gate
10123	Triple 4-3-3-Input Bus Driver
10124	Quad TTL to ECL Translator
10125	Quad ECL to TTL Translator
10129	Quad TTL/IBM Bus Receiver/Latch
10130	Dual D-Type Latch
10131	Dual D-Type Master-Slave Flip-Flop
10132	Dual 2-Input Multiplexer with Clocked D-Type Latches and Common Reset
10133	Quad Latch with D-Type Inputs and Enable Outputs

DEVICE TYPE	DESCRIPTION
10134	Dual 2-Input Multiplexer with Clocked D-Type Latches
10135	Dual JK Master-Slave Flip-Flop
10136	Universal Hexadecimal Counter
10137	Universal Decade Counter
10141	4-Bit Universal Shift Register
10149	1024-Bit, 4-Bits per Word PROM
10155	16-Bit, 2-Bits per Word RAM
10158	Quad 2-to-1 Multiplexer (Non-inverting)
10159	Quad 2-to-1 Multiplexer (Inverting)
10160	12-Bit Parity Checker/Generator
10161	3-Bit Decoder with 2 Enable Inputs (1-of-8 LOW)
10162	3-Bit Decoder with 2 Enable Inputs (1-of-8 HIGH)
10164	8-Input Multiplexer with Enable Input
10165	8-Input Priority Encoder
10171	Dual 2-Bit Decoder (1-of-4 Lines LOW)
10172	Dual 2-Bit Decoder (1-of-4 Lines HIGH)
10173	Quad 2-Input Multiplexer with Latched Outputs
10174	Dual 4-to-1 Multiplexer (with Enable)
10175	Quint D-Latch w/Com Reset and 2 Wired-OR Com Clock Inputs
10176	Hex D-Type Master-Slave Flip-Flop
10179	Look-Ahead Carry Block-Arithmetic Functions
10180	Dual High-Speed Adder/Subtractor
10181	4-Bit Logic Unit/Function Generator
10188	Hex Buffer (Non-Inverting)
10189	Hex Inverter
10192	Quad Differential Line Driver
10210	Dual 3-Input/3-Output (High-Speed) OR Gate
10211	Dual 3-Input/3-Output (High-Speed) NOR Gate
10216	Triple Differential OR/NOR Line Receiver (High-Speed)
10231	Dual Type-D Master-Slave Flip-Flop (High-Speed)

100K ECL

DEVICE TYPE	DESCRIPTION
100101	Triple 5-Input Gate
100102	Quint 2-Input Gate
100107	Quint Exclusive-OR/NOR
100112	Quad Driver
100113	Line Driver
100114	Line Receiver
100117	Triple AOI
100118	5-Wide AOI
100122	9-Bit Buffer Gate
100123	Hex Bus Driver
100126	Back Plane Driver
100131	Triple D Flip-Flop
100136	Multipurpose Counting Register
100141	8-Bit Universal Shift Register
100145	16 x 4 Register File
100150	Hex D Latch
100151	Hex D Flip-Flop

DEVICE TYPE	DESCRIPTION
100155	Quad Multiplexer/Latch
100158	Shift Matrix
100160	Dual 9-Bit Parity
100163	Dual 8-Input Multiplexer
100164	16-Input Multiplexer
100165	Universal Priority Encoder
100166	9-Bit Comparator
100170	Universal Decoder
100171	Triple 4-Input Multiplexer
100175	100K-10K Translator
100180	Fast 6-Bit Adder
100181	4-Bit ALU Binary/Decimal
100255	TTL-100K Translator/Bidirectional
SAF/SAB1034	4-to-1 ECL Frequency Divider
SAF/SAB1534	4-to-1 ECL Frequency Divider

© IC MASTER 1984

10K AND 100K ECL SELECTION GUIDE

DEVICE TYPE	DESCRIPTION
OR/NOR Gates	
10100	Quad 3-Input NOR (1 Input Common)
10101	Quad 2-Input OR/NOR (1 Input Common)
10102	Quad 2-Input 3 NOR and 1 OR/NOR
10103	Quad 2-Input 3 OR and 1 OR/NOR
10105	Triple 2-3-2 Input OR/NOR
10106	Triple 4-3-3 Input NOR
10109	Dual 4-5 Input OR/NOR
10110	Dual 3-Input/3-Output OR (Line Driver)
10111	Dual 3-Input/3-Output NOR (Line Driver)
10210	High-Speed Dual 3-Input/3-Output OR
10211	High-Speed Dual 3-Input/3-Output NOR
100101	Triple 5-Input OR/NOR
100102	Quint 2-Input OR/NOR
Exclusive OR/NOR Gates	
10107	Triple 2-Input Exclusive-OR/Exclusive-NOR
10113	Quad Exclusive-OR (With Enable)
100107	Quint Exclusive-OR/Exclusive-NOR
AND, AND/NAND Gates	
10104	Quad 2-Input AND
10108	Dual 3-Input AND/NAND
AND-OR-Invert Combination Gates	
10117	Dual 2-Wide 2-3 Input OR-AND/OR-AND-Invert
10118	Dual 2-Wide 3-Input OR-AND
10119	4-Wide 4-3-3-3 Input OR-AND
10121	4-Wide OR-AND/OR-AND-Invert
100117	Triple 2-2-1 Input OR/AND
10118	Quint 5-4-4-4-2 Input OR/AND
Buffer Gates	
10188	Hex Buffer
10189	Hex Inverter
100122	9 Buffer Gates
Flip-Flops	
10131	Dual D-Type Master-Slave
10176	Hex D-Type Master-Slave
10231	High-Speed Dual D-Type Master-Slave
100131	Triple D
100151	Hex D Master-Slave
10135	Dual JK Master-Slave
Latch	
10130	Dual D-Type
10133	Quad with D-Type Inputs and Enable Outputs
10175	Quint D, Common Reset, 2-Wired-OR Common Clock Inputs
100150	Hex D
Registers/Shift Registers	
10141	4-Bit Universal Shift Register
100136	4-Stage Counter/Shift Register
100141	8-Bit Shift Register
100145	16 x 4-Bit Register File
100158	8-Bit Shift Matrix
Counters	
10136	Universal Hexadecimal
10137	Universal Decade
100136	4-Stage Counter/Shift Register

DEVICE TYPE	DESCRIPTION
Multiplexers/Encoders	
10132	Dual 2-Input Multiplexer with Clocked D Latches and Common Reset
10134	Dual 2-Input Multiplexer with Clocked D Latches
10158	Quad 2-to-1 Multiplexer (Non-Inverting)
10159	Quad 2-to-1 Multiplexer (Inverting)
10164	8-Input Multiplexer with Enable Input
10165	8-Input Priority Encoder
10173	Quad 2-Input Multiplexer with Latched Outputs
10174	Dual 4-to-1 Multiplexer with Enable
100155	Quad Multiplexer with Latch
100163	Dual 8-Line Multiplexer
100164	16-Line Multiplexer
100165	Universal Priority Encoder
100171	Triple 4-Line Multiplexer
Decoders/Demultiplexer	
10161	1-of-8 Lines (LOW) With Two Enable Inputs
10162	1-of-8 Lines (HIGH) With Two Enable Inputs
10171	Dual 1-of-4 Lines (LOW)
10172	Dual 1-of-4 Lines (HIGH)
100170	Universal Decoder/Demux
Arithmetic Operators	
10160	12-Bit Parity Checker/Generator
10179	Look-Ahead Carry Block
10180	Dual 2-Bit Adder/Subtractor
10181	4-Bit Arithmetic Logic Unit
100160	9-Bit Parity/8-Bit Comparator
100166	9-Bit Magnitude Comparator
100180	High-Speed Adder
100181	4-Bit Arithmetic Logic Unit
Bus and Line Drivers	
10110	Dual 3-Input/3-Output OR Line Drivers
10111	Dual 3-Input/3-Output NOR Line Driver
10112	Dual 3-Input/3-Output Line Driver
10123	Triple 4-3-3 Input Bus Driver
10192	Quad Differential Line Driver
100112	Quad High Fan-Out Driver
100113	Line Driver
100123	Hex Bus Driver
100126	Back Plane Driver
Receivers	
10114	Triple Line Receiver
10115	Quad Line Receiver
10116	Triple Line Receiver
10129	Quad TTL/IBM Bus Receiver
10216	Triple Differential OR/NOR Line Receiver
100114	Quint Line Receiver
Translators	
10124	Quad TTL to ECL Translator
10125	Quad ECL to TTL Translator
10129	Quad TTL/IBM Bus Receiver/Latch
100175	100K–10K Translator
Memories	
10149	1024-Bit, 4 Bits per Word PROM
10155	16-Bit, 2 Bits per Word RAM

© IC MASTER 1984

TTL, FAST, HC/HCT CROSS REFERENCE

TECHNOLOGY SELECTION GUIDE

DEVICE NUMBER	DESCRIPTION	STD	S	LS	FAST	HC	HCT
74/54							
00	Quad 2-Input NAND Gate	A	A	A	A	A	A
01	Quad 2-Input NAND Gate, OC			A			
02	Quad 2-Input NOR Gate	A	A	A	A	Q1 84	Q1 84
03	Quad 2-Input NAND Gate	A	A				
04	Hex Inverter	A	A	A	A	Q2 84	Q2 84
05	Hex Inverter, OC	A	A	A			
06	Hex Inverter Buffer/Driver, OC	A					
07	Hex Buffer/Driver, OC	A					
08	Quad 2-Input	A	A	A	A	Q2 84	Q2 84
09	Quad 2-Input AND Gate, OC			A			
10	Triple 3-Input NAND Gate	A	A	A	A	Q2 84	Q2 84
11	Triple 3-Input AND Gate	A	A	A	A	Q2 84	Q2 84
13	Dual 4-Input NAND Schmitt Trigger	A		A	A		
14	Hex Schmitt Trigger	A		A	A	Q2 84	Q2 84
16	Hex Inverter Buffer/Driver, OC	A					
17	Hex Buffer/Driver, OC	A					
20	Dual 4-Input NAND Gate	A	A	A	A	Q2 84	Q2 84
21	Dual 4-Input AND Gate	A	A				
25	Dual 4-Input NOR with Strobe	A					
26	Quad 2-Input NAND Gate, OC	A		A			
27	Triple 3-Input NOR Gate	A		A		Q1 84	Q1 84
28	Quad 2-Input NOR Buffer	A					
30	8-Input NAND Gate	A		A			
32	Quad 2-Input OR Gate	A	A	A	A	Q2 84	Q2 84
33	Quad 2-Input NOR Buffer	A		A			
37	Quad 2-Input NAND Buffer	A	A	A	1H 84		
38	Quad 2-Input NAND Buffer, OC	A	A	A	1H 84		
39	Quad 2-Input NAND Buffer, OC	A					
40	Dual 4-Input NAND Buffer	A	A	A	1H 84		
42	BCD-to-Decimal Decoder	A		A		Q2 84	Q2 84
45	BCD-to-Decimal Decoder/Driver, OC	A					
50	Expandable Dual 2-Wide 2-Input AOI Gate	A					
51	Dual 2-Wide 2-Input AOI Gate	A	A	A			
54	4-Wide 2-Input AOI Gate			A			
64	4-2-3-2 Input AOI Gate		A		A		
73	Dual J-K Master-Slave Flip-Flop	A		A		Q1 84	Q1 84
74	Dual D-Type Positive Edge-Triggered Flip-Flop	A	A	A*	A	A	A
75	Quad Bistable Latch	A		A		Q1 84	Q1 84
76	Dual J-K Master-Slave Flip-Flop	A		A			
83	4-Bit Binary Full Adder, Ripple Carry	A		A*			
85	4-Bit Magnitude Comparator	A	A	A	1H 84	Q2 84	Q2 84
86	Quad 2-Input Exclusive-OR Gate	A	A	A	A	A	A
90	Decade Ripple Counter	A		A			
91	8-Bit Shift Register	A					
92	Divide-by-12 Counter	A		A			
93	4-Bit Binary Ripple Counter	A		A			
94	4-Bit PISO Shift Register	A					
95	4-Bit Shift Register	A		A**			
96	5-Bit Shift Register	A		A			
107	Dual J-K Master-Slave Flip-Flop	A		A		Q1 84	Q1 84
109	Dual J-K Positive Edge-Triggered Flip-Flop	A		A*	A	Q1 84	Q1 84
112	Dual J-K Negative Edge-Triggered Flip-Flop		A	A	2H 84	Q2 84	Q2 84
113	Dual J-K Negative Edge-Triggered Flip-Flop		A	A	2H 84		
114	Dual J-K Negative Edge-Triggered Flip-Flop				2H 84		
116	Dual 4-Bit Latch with Clear	A					

*A Version; **B Version; P = Planned; Q1 84 = 1st Quarter of 1984; 1H 84 = 1st Half of 1984

© IC MASTER 1984

TTL, FAST, HC/HCT CROSS REFERENCE

DEVICE NUMBER	DESCRIPTION	STD	S	LS	FAST	HC	HCT
121	Monostable Multivibrator	A					
123	Retriggerable Monostable Multivibrator	A				A	A
125	Quad 3-State Buffer	A		A			
126	Quad 3-State Buffer	A		A			
128	Quad 2-Input NOR Buffer	A					
132	Quad Schmitt Trigger	A		A	A	A	A
133	13-Input NAND Gate		A				
134	12-Input NAND Gate, 3-State		A				
135	Quad Exclusive-OR/NOR Gate		A				
136	Quad Exclusive-OR, OC			A			
138	3-to-8 Decoder/Demultiplexer		A	A	A	Q1 84	Q1 84
139	Dual 2-to-4 Decoder/Demultiplexer		A	A	A	A	A
140	Dual 4-Input NAND Line Driver		A				
145	BCD-to-Decimal Decoder/Driver, OC	A					
147	10-to-4 Priority Encoder	A				Q1 84	Q1 84
148	8-to-3 Priority Encoder	A			2H 84		
150	16-to-6 Multiplexer	A					
151	8-to-1 Multiplexer	A	A	A	1H 84	Q1 84	Q1 84
153	Dual 4-to-1 Multiplexer	A	A	A	1H 84	A	A
154	4-to-16 Decoder/Demultiplexer	A		A		A	A
155	Dual 2-to-4 Decoder/Demultiplexer	A		A			
156	Dual 2-to-4 Decoder/Demultiplexer, OC	A		A			
157	Quad 2-to-1 Multiplexer	A	A	A	A	A	A
158	Quad 2-to-1 Multiplexer	A	A	A	A	A	A
160	Synchronous 4-Bit Decade Counter	A		A*	2H 84	Q2 84	Q2 84
161	Synchronous 4-Bit Binary Counter	A		A*	2H 84	Q2 84	Q2 84
162	Synchronous 4-Bit Decade Counter			A*	2H 84	Q2 84	Q2 84
163	Synchronous 4-Bit Binary Counter	A		A*	2H 84	Q2 84	Q2 84
164	8-Bit PISO Shift Register	A		A	1H 84	A	A
165	8-Bit PISO Shift Register	A				A	A
166	8-Bit PISO Shift Register	A				Q1 84	Q1 84
168	Decade Up/Down Counter		A	A*	2H 84		
169	Binary Up/Down Counter		A	A*	2H 84		
170	4 × 4 Register File, OC	A		A			
172	16-Bit Multiple Port Register File		A				
173	Quad D-Type Flip-Flop, 3-State	A		A		Q2 84	Q2 84
174	Hex D-Type Flip-Flop with Clear	A	A	A	1H 84	Q2 84	Q2 84
175	Quad D-Type Flip-Flop	A	A	A	1H 84	Q1 84	Q1 84
180	8-Bit Odd/Even Parity Checker	A					
181	4-Bit Arithmetic Logic Unit	A	A	A	1H 84		
182	Look-Ahead Generator		A		84		
190	Decade Up/Down Counter	A			84	Q2 84	Q2 84
191	Binary Up/Down Counter	A		A	84	Q2 84	Q2 84
192	Decade Up/Down Counter	A		A	84	Q1 84	Q1 84
193	4-Bit Binary Up/Down Counter	A		A	84	Q2 84	Q2 84
194	4-Bit Bidirectional Shift Register	A	A	A	A	A	A
195	4-Bit Parallel-Access Shift Register	A	A	A	1H 84	A	A
197	Presettable Binary Counter			A			
198	8-Bit Bidirectional Universal Shift Register				2H 84		
199	8-Bit Universal Shift Register	A					
221	Dual Monostable Multivibrator	A				P	P
225	FIFO		A				
238	1-of-8 Decoder/Demultiplexer, True/Inverting					Q1 84	Q1 84
240	Octal 3-State Buffer		A	A	1H 84	A	A
241	Octal 3-State Buffer		A	A	A	A	A

*A Version; **B Version; P = Planned; Q1 84 = 1st Quarter of 1984; 1H 84 = 1st Half of 1984

TTL, FAST, HC/HCT CROSS REFERENCE

DEVICE NUMBER	DESCRIPTION	STD	S	LS	FAST	HC	HCT
242	Quad Bus Transceiver		A	A	1H 84	Q1 84	Q1 84
243	Quad Bus Transceiver		A	A	A	Q1 84	Q1 84
244	Octal 3-State Buffer		A	A	A	A	A
245	Octal Bus Transceiver			A	1H 84	A	A
251	8-to-1 Multiplexer, 3-State		A	A	1H 84	A	A
253	Dual 4-to-1 Multiplexer, 3-State		A	A	1H 84	A	A
256	Dual 4-Bit Addressable Latch			A	1H 84		
257	Quad 2-to-1 Multiplexer, 3-State		A	A*	A	A	A
258	Quad 2-to-1 Multiplexer, 3-State			A*	A		
259	8-Bit Addressable Latch			A	1H 84	Q2 84	Q2 84
260	Dual 5-Input NOR Gate		A	A			
266	Quad Exclusive-OR, OC			A			
269	8-Bit Up/Down Counter				1H 84		
273	Octal D Flip-Flop		A	A	1H 84	Q1 84	Q1 84
279	Quad S-R Latch	A					
280	9-Bit Odd/Even Parity Generator/Checker		A		A*	A	A
283	4-Bit Adder			A	2H 84		
290	Decade Counter			A			
293	4-Bit Binary Counter			A			
295	4-Bit Shift Register, 3-State			A**			
297	Digital Phase-Locked Loop Filter					Q1 84	Q1 84
298	Quad 2-Port Register	A		A	A		
299	Octal Shift/Storage Register, 3-State				2H 84	Q1 84	Q1 84
322	Octal Shift/Storage Register				1H 84		
323	Octal Shift/Storage Register				1H 84		
350	4-Bit Four-Way Shifter		A		A		
352	Dual 4-to-1 Multiplexer, Inverting			A	1H 84		
353	Dual 4-to-1 Multiplexer, Inverting, 3-State			A	1H 84		
354	8-Input Multiplexer/Register, 3-State					Q2 84	Q2 84
356	8-Input Multiplexer/Register, 3-State					Q2 84	Q2 84
363	Octal Latch, 3-State, MOS Compatible Outputs			A			
364	Octal D Flip-Flop, 3-State, MOS Compatible Outputs			A			
365	Hex Buffer with Common Enable, 3-State	A		A*	1H 84	Q3 84	Q3 84
366	Hex Inverter with Common Enable, 3-State	A		A*	1H 84	Q1 84	Q1 84
367	Hex Buffer, 4-Bit and 2-Bit, 3-State	A		A*	1H 84	Q1 84	Q1 84
368	Hex Inverter, 4-Bit and 2-Bit, 3-State	A		A*	1H 84	Q1 84	Q1 84
373	Octal Latch, 3-State		A	A	A	Q1 84	Q1 84
374	Octal D Flip-Flop, 3-State		A	A	A	Q1 84	Q1 84
375	Quad Latch			A			
377	Octal D-Type Flip-Flop with Enable			A	1H 84	A	A
378	Hex D Flip-Flop with Enable			A	2H 84		
379	Quad D Flip-Flop with Enable				2H 84		
384	8-Bit Serial/Parallel Two's Complement Multiplexer					P	P
390	Dual Decade Ripple Counter			A		Q1 84	Q1 84
393	Dual Binary Ripple Counter			A			
395	4-Bit Cascadable Shift Register, 3-State			A	1H 84		
398	4-Bit Flip-Flop, True/Complement				2H 84		
399	4-Bit Flip-Flop, True/Complement				2H 84		
423	Dual Retriggerable Monostable Multivibrator					P	P
445	BCD-to-Decimal Decoder with 7V Output			A			

*A Version; **B Version; P = Planned; Q1 84 = 1st Quarter of 1984; 1H 84 = 1st Half of 1984

© IC MASTER 1984

TTL, FAST, HC/HCT CROSS REFERENCE

DEVICE NUMBER	DESCRIPTION	STD	S	LS	FAST	HC	HCT
490	Dual Decade Ripple Counter			A			
521	8-Bit Comparator				A		
524	8-Bit Register Comparator				1H 84		
533	Inverting Octal D Latch, 3-State				A	Q1 84	Q1 84
534	Octal D Flip-Flop, 3-State				A	A	A
540	Octal Driver			A		Q1 84	Q1 84
541	Octal Driver			A		Q1 84	Q1 84
545	Octal Bus Transceiver				1H 84		
563	Octal Transparent Inverting Latch, 3-State					A	A
564	Octal D-Type Inverting Flip-Flop, 3-State					Q1 84	Q1 84
568	BCD Decade Up/Down Synchronous Counter			A*	2H 84		
569	4-Bit Binary Up/Down Synchronous Counter			A*	2H 84		
573	Octal Transparent Latch, 3-State					A	A
574	Octal D-Type Flip-Flop, Positive Edge-Triggered, 3-State					Q2 84	Q2 84
579	8-Bit Up/Down Counter, Common I/O				1H 84		
588	GPIB Compatible Octal Transceiver				1H 84		
595	8-Bit Shift Register with Output Latch				84		
596	8-Bit Shift Register with Output Latch				84		
597	8-Bit Shift Register with Input Latch				84		
598	8-Bit Shift Register with Input Latch				84		
604	Dual 8-Bit Latch				1H 84		
605	Dual 8-Bit Latch				1H 84		
620	Octal Transceiver, 3-State			A	1H 84		
621	Octal Transceiver, OC			84	1H 84		
622	Octal Transceiver, 3-State			84	1H 84		
623	Octal Transceiver, OC			A	1H 84		
630	Memory Error Detector/Corrector, 3-State				1H 84		
631	Memory Error Detector/Corrector				1H 84		
640	Octal Bus Transceiver, 3-State			84		A	A
641	Octal Bus Transceiver, OC			A			
642	Octal Bus Transceiver			84			
643	Octal True/Inverting Transceiver, 3-State					A	A
645	Octal Bus Transceiver			A			
646	Octal Bus Transceiver with Registers				1H 84	P	P
647	Octal Bus Transceiver with Registers				1H 84		
648	Octal Bus Transceiver with Registers				1H 84	P	P
649	Octal Bus Transceiver with Registers				1H 84		
655	Octal Buffer with Parity Generator-Checker				1H 84		
656	Octal Buffer with Parity Generator-Checker				1H 84		
657	Octal Bus Transceiver with Parity Generator-Checker				1H 84		
670	4 × 4 Register File, 3-State					Q2 84	Q2 84
673	16-Bit SIPO Shift Register				2H 84		
674	16-Bit PISO Shift Register				2H 84		
675	16-Bit PISO Shift Register with Serial Output Capability				2H 84		
676	16-Bit PISO Shift Register with Parallel Output Capability				2H 84		
688	8-Bit Magnitude Comparator					A	A
764	Dual Port RAM Controller with DRAM Refresh			84			
779	8-Bit Counter				1H 84		

*A Version; **B Version; P = Planned; Q1 84 = 1st Quarter of 1984; 1H 84 = 1st Half of 1984

CMOS HC/HCT NUMBER CROSS REFERENCE GUIDE

TYPE NO.	FUNCTION	CMOS	HC	HCT
4000	Dual 3-Input NOR Gate and Inverter	A		
4001	Quad 2-Input NOR Gate	A		
4001UB	Quad 2-Input NOR Gate, Unbuffered	A		
4002	Dual 4-Input NOR Gate	A	Q2 84	Q2 84
4006	18-Stage Static Shift Register	A		
4007UB	Dual Complementary Pair and Inverter	A		
4008	4-Bit Binary Full Adder	A		
4011	Quad 2-Input NAND Gate	A		
4011UB	Quad 2-Input NAND Gate, Unbuffered	A		
4012	Dual 4-Input NAND Gate	A		
4013	Dual D-Type Flip-Flop	A		
4014	8-Bit Static Shift Register	A		
4015	Dual 4-Bit Static Shift Register	A	P	P
4016	Quad Bilateral Switches	A	83 Q4	83 Q4
4017	5-Stage Johnson Counter	A	Q1 84	Q1 84
4018	Presettable Divide-by-n Counter	A		
4019	Quad 2-Input Multiplexer	A		
4020	14-Stage Binary Counter	A	Q1 84	Q1 84
4021	8-Bit Static Shift Register	A		
4022	4-State Divide-by-8 Johnson Counter	A		
4023	Triple 3-Input NAND Gate	A		
4024	7-Stage Binary Counter	A	Q3 84	Q3 84
4025	Triple 3-Input NOR Gate	A		
4027	Dual J-K Flip-Flop	A		
4028	1-of-10 Decoder	A		
4029	Synchronous Up/Down-Binary/Decade Counter	A		
4030	Quad Exclusive-OR Gate	A		
4031	64-Stage Static Shift Register	A		
4035	4-Bit Universal Shift Register	A		
4040	12-Stage Binary Counter	A	Q1 84	Q1 84
4041	Quad True/Complement Buffer	A		
4042	Quad D-Latch	A		
4043	Quad R/S Latch with 3-State Outputs	A		
4044	Quad R/S Latch with 3-State Outputs	A		
4046	Phase-Locked Loop	A	Q3 84	Q3 84
4047	Monostable/Astable Multivibrator	A		
4049	Hex Inverting Buffers	A	Q2 84	Q2 84
4050	Hex Non-Inverting Buffers	A	Q2 84	Q2 84
4051	8-Channel Analog Multiplexer/Demultiplexer	A	Q2 84	Q2 84
4052	Dual 4-Channel Analog Multiplexer/Demultiplexer	A	P	P
4053	Triple 2-Channel Analog Multiplexer/Demultiplexer	A	Q3 84	Q3 84
4059	Programmable Divide-by-n Counter	A		
4060	14-Stage Ripple-Carry Binary Counter/Divider and Oscillator	A	A	A
4066	Quad Bilateral Switches	A	Q3 84	Q3 84
4067	16-Channel Analog Multiplexer/Demultiplexer	A	Q3 84	Q3 84
4068	8-Input NAND Gate	A		
4069UB	Hex Inverter	A		
4070	Quad Exclusive-OR Gate	A		
4071	Quad 2-Input OR Gate	A		
4072	Dual 4-Input OR Gate	A		
4073	Triple 3-Input AND Gate	A		
4075	Triple 3-Input OR Gate	A	Q1 84	Q1 84
4076	Quad D-Type Register with 3-State Outputs	A		
4077	Quad Exclusive-NOR Gate	A		
4078	8-Input NOR Gate	A		
4081	Quad 2-Input AND Gate	A		
4082	Dual 4-Input AND Gate	A		
4085	Dual 2-Wide 2-Input AND-OR-Invert Gate	A		
4086	4-Wide 2-Input AND-OR-Invert Gate	A		
4093	Quad 2-Input NAND Schmitt Trigger	A		
4094	8-Stage Shift-and-Store Bus Register	A	Q3 84	Q3 84
4104	Quad Low-to-High Voltage Translator	A		
4502	Strobex Hex Inverter/Buffer	A		
4505	64-Bit Static Read/Write RAM	A		
4508	Dual 4-Bit Latch	A		
4510	BCD Up/Down Counter	A		
4511	BCD to 7-Segment Latch/Decoder/Driver	A	Q3 84	Q3 84
4512	8-Input Multiplexer with 3-State Output	A		
4514	1-of-16 Decoder/Demultiplexer with Input Latches	A	Q3 84	Q3 84
4515	1-of-16 Decoder/Demultiplexer with Input Latches	A	Q2 84	Q2 84
4516	Binary Up/Down Counter	A		
4517	Dual 64-Bit Static Shift Register	A		
4518	Dual BCD Counter	A	Q2 84	Q2 84
4519	Quad 2-Input Multiplexer	A		
4520	Dual Binary Counter	A	Q2 84	Q2 84
4521	24-Stage Frequency Divider	A		
4522	Programmable 4-Bit BCD Down Counter	A		
4526	Programmable 4-Bit Binary Down Counter	A		
4527	BCD Rate Multiplier	A		
4528	Dual Monostable Multivibrator	A		

A = Available; P = Planned; Q1 84 = 1st Quarter of 1984; Q2 84 = 2nd Quarter of 1984; Q3 84 = 3rd Quarter of 1984

© IC MASTER 1984

CMOS HC/HCT NUMBER CROSS REFERENCE GUIDE

TYPE NO.	FUNCTION	CMOS	HC	HCT
4531	13-Input Parity Checker/ Generator	A		
4532	8-Input Priority Encoder	A		
4534	Real-Time 5-Decade Counter	A		
4538	Dual Precision Monostable Multivibrator	A	Q1 84	Q1 84
4539	Dual 4-Input Multiplexer	A		
4541	Programmable Timer	A		
4543	BCD to 7-Segment Latch/ Decoder/Driver	A	Q4 84	Q4 84
4555	Dual 1-of-4 Decoder/ Demultiplexer	A		
4556	Dual 1-of-4 Decoder/ Demultiplexer	A		
4557	1-to-64 Bit Variable Length Shift Register	A		
4585	4-Bit Magnitude Comparator	A		
4720B; V	256-Bit per Word RAM	A		
4724	8-Bit Addressable Latch	A		
4731B; V	Quad 64-Bit Static Shift Register	A		
4737B; V	Quad Static Decade Counters	A		
4738	IEC/IEEE Bus Interface	A		
4750	Frequency Synthesizer	A		
4751	Universal Divider	A		
4752V	AC Motor Control Circuit	A		
4754V	18-Element Bar Graph LCD Driver	A		
40097	3-State Hex Non-Inverting Buffer	A		
40098	3-State Hex Inverting Buffer	A		
40103	8-Bit Binary Counter		Q3 84	Q3 84
40104	4-Bit Bidirectional Universal Shift Register		A	A
40105	4-Bit × 16-Word FIFO Register		Q1 84	Q1 84

TYPE NO.	FUNCTION	CMOS	HC	HCT
40106	Hex Schmitt Trigger	A		
40160	4-Bit Synchronous Decade Counter, Asynchronous Reset	A		
40161	4-Bit Synchronous Binary Counter, Asynchronous Reset	A		
40162	4-Bit Synchronous Decade Counter, Synchronous Reset	A		
40163	4-Bit Synchronous Binary Counter, Synchronous Reset	A		
40174	Hex D-Type Flip-Flop	A		
40175	Quad D-Type Flip-Flop	A		
40192	4-Bit Up/Down Decade Counter	A		
40193	4-Bit Up/Down Binary Counter	A		
40194	4-Bit Bidirectional Universal Shift Register	A		
40195	4-Bit Universal Shift Register	A		
40240	Octal Inverting Buffers with 3-State Outputs	A		
40244	Octal Buffers with 3-State Outputs	A		
40245	Octal Bus Transceiver with 3-State Outputs	A		
40373	Octal Transparent Latch with 3-State Outputs	A		
40374	Octal D-Type Flip-Flop with 3-State Outputs	A		

A = Available; P = Planned; Q1 84 = 1st Quarter of 1984; Q2 84 = 2nd Quarter of 1984; Q3 84 = 3rd Quarter of 1984

FUNCTION CROSS REFERENCE GUIDE

The Function Cross Reference Guide is provided for customer reference only. It does not represent all the devices available from Signetics' Logic Division.
The device number given is a base number. Check the Number Cross Reference Guide for the complete part number and availability.

GATES

FUNCTION	DEVICE NO.
Inverters	
Hex Inverter	04
Hex Inverter, OC	05
Hex Inverter buffer/Driver, OC (30V)	06
Hex Inverter Schmitt Trigger	14
Hex Inverter Buffer/Driver, OC (15V)	16
Hex Inverter (15V to TTL Levels)	4049
Hex Inverter Unbuffered Outputs	4069UB
Hex Inverter Schmitt Trigger	40106
Dual Complementary Pair and Inverter, Unbuffered	4007UB
NAND	
Quad 2-Input	00
Quad 2-Input, OC	01
Quad 2-Input, OC	03
Quad 2-Input, OC	26
Triple 3-Input	10
Dual 4-Input, Schmitt Trigger	13
Dual 4-Input	20
8-Input	30
Quad 2-Input, Schmitt Trigger	132
Quad 2-Input	4011
Quad 2-Input, Unbuffered Outputs	4011UB
Dual 4-Input	4012
Triple 3-Input	4013
8-Input	4068
12-Input	134
13-Input	133
AND	
Quad 2-Input	08
Quad 2-Input	4081
Quad 2-Input, OC	09
Triple 3-Input	11
Dual 4-Input	21
Dual 4-Input	4082
NOR	
Quad 2-Input	02
Quad 2-Input	28

FUNCTION	DEVICE NO.
NOR (Continued)	
Quad 2-Input	128
Quad 2-Input	4001
Quad 2-Input, Unbuffered Output	4001UB
Quad 2-Input, OC	33
Triple 3-Input	27
Triple 3-Input	4025
Dual 3-input, with Inverter	4000
Dual 4-Input	4002
Dual 4-Input, with Strobe	25
Dual 5-Input	260
8-Input	4078
OR	
Quad 2-Input	32
Quad 2-Input	4071
Triple 3-Input	4075
Dual 4-Input	4072
Exclusive-OR	
Quad	86
Quad	4030
Quad, OC	136
Quad	4070
Quad Exclusive OR-NOR	135
Exclusive-NOR	
Quad	4077
Quad, OC	266
Quad Exclusive OR-NOR	135
Combination Gates	
Expandable Dual 2-Wide 2-Input AND-OR-Invert	50
Dual 2-Wide 2-Input AND-OR-Invert	51
4-Wide 2-Input AND-OR-Invert	54
4-2-3-2 Input AND-OR-Invert	64
Dual 3-Input NOR Gate with Inverter	4000
Dual Complementary Pair and Inverter, Unbuffered	4007UB
Dual 2-Wide 2-Input AND-OR-Invert	4085
4-Wide 2-Input AND-OR-Invert	4086

DUAL FLIP-FLOPS

FUNCTION	DEVICE NUMBER	CLOCK EDGE	SET	CLEAR
D	74	↑	LOW	LOW
D	4013	↑	HIGH	HIGH
JK	73	↓		LOW
JK	76	↓	LOW	LOW
JK	107	↓		LOW
JK	109	↑	LOW	LOW
JK	112	↓	LOW	LOW
JK	113	↓	LOW	
JK	4027	↑	HIGH	HIGH

© IC MASTER 1984

FUNCTION CROSS REFERENCE GUIDE

MULTIPLE FLIP-FLOPS

FUNCTION	DEVICE NUMBER	RESET (LEVEL)	CLOCK EDGE	OUTPUT
Quad D	175	LOW	↑	True, Comp
Quad D	40175	LOW	↑	True
Quad D with Enable	379		↑	True, Comp
Quad D, 3-State	4079	HIGH	↑	True
Quad D, 3-State	8T10	HIGH	↑	True
Hex D	174	LOW	↑	True
Hex D with Enable	378		↑	True
Octal D	273	LOW	↑	True
Octal D, 3-State	374		↑	True
Octal D, 3-State	534		↑	Comp
Octal D, 3-State	564		↑	Comp
Octal D, 3-State	574		↑	True
Octal D, 3-State	40374		↑	True
Octal D, 3-State	8TS806		↑	True
Octal D, 3-State	8TS808		↑	Comp
Octal D, 3-State, MOS Compatible Outputs	364		↑	True

OTHER REGISTERS, REGISTER FILES

FUNCTION	DEVICE NUMBER	BITS	SERIAL ENTRY	PARALLEL ENTRY*	CLOCK
Quad 2 Port	298	4 x 2		2D (mux)	↓
Quad 2 Port	398	4 x 2		2D (mux)	↑
Quad 2 Port	399	4 x 2		2D (mux)	↑
Register File, OC	170	4 x 4		4A	↓
Multiple Port Register File, 3-State	172	16		3D (mux)	↓
4 x 4 Register File, 3-State	670	4 x 4		4A	↓
16 x 5 FIFO, 3-State	225	5		5S	↑
4 x 16 FIFO	40105	4	D	4S	

*D = D type input, A = Asynchronous data input, S = Synchronous data input

© IC MASTER 1984

FUNCTION CROSS REFERENCE GUIDE

SHIFT REGISTERS

FUNCTION	DEVICE NUMBER	BITS	SERIAL ENTRY	PARALLEL ENTRY	CLOCK
Serial In/Serial Out Shift Register	91	8	D_A and D_B		↑
Serial In/Serial Out Shift Right	4006	(2 × 4) (2 × 5)	D		↓
Serial In/Serial Out Shift Right	4031	64	$D_A + D_B$		↑
Dual Serial In/Serial Out Shift Right, 3-State	4517	(4 × 16)	D		↑
Quad Serial In/Serial Out Shift Right	4731	64	D		↓
Serial In/Serial Out Variable Length Shift Right	4557	1 to 64	$D_A + D_B$		↑ and ↓
Serial In/Serial Out Shift Right, 3-State	4094	8	D		↑
Parallel/Serial In/Serial Out Shift Right	94	4	D	2 × 4A (mux)	↑
Parallel/Serial In/Serial Out Shift Right	165	8	D	8A	↑
Parallel/Serial In/Serial Out Shift Right	166	8	D	8S	↑
Parallel/Serial In/Serial Out Shift Right	195	4	J, $\overline{K}$	4S	↑
Parallel/Serial In/Serial Out Shift Right	199	8	J, K	8S	↑
Parallel/Serial In/Serial Out Shift Right	597	8	D	8S	↑
Parallel/Serial In/Serial Out Shift Right	4014	8	D	8S	↑
Parallel/Serial In/Serial Out Shift Right	4021	8	D	8A	↑
Parallel/Serial In/Serial Out Shift Right	8274	10	D	10S	↓
Parallel/Serial In/Serial Out Shift Right, 3-State	598	8	S0, S1	8S	↑
Serial In/Parallel Out Shift Right	164	8	D_0 and D_1		↑
Serial In/Parallel Out Shift Right, with Reset	8273	10	D		↓ or ↑
Dual Serial In/Parallel Out Shift Right	4015	4	D		↑
Serial In/Parallel Out, 3-State	595	8	D		↑
Serial In/Parallel Out, OC	596	8	D		↑
Parallel In/Serial In/Parallel Out Shift Right	95	4	D	5A	↓
Parallel In/Serial In/Parallel Out Shift Right	96	5	D	5A	↑
Parallel In/Serial In/Parallel Out Shift Right	40195	4	J, $\overline{K}$	4S	↑
Parallel In/Serial In/Parallel Out Shift Right	8271	4	D	4S	↓
Parallel In/Serial In/Parallel Out Shift Right	82S71	4	D	4S	↓
Parallel In/Serial In/Parallel Out Shift Right	4035	4	J, $\overline{K}$	4S	↑
Parallel In/Serial In/Parallel Out Shift Right, 3-State	295	4	D	4S	↓
Parallel In/Serial In/Parallel Out Shift Right, 3-State	395	4	D	4S	↓
Parallel In/Serial In/Parallel Out Shift Right, 3-State	322	8	$D_0 + D_1$	8S (I/O)	↑
Parallel In/Serial In/Parallel Out Bidirectional	194	4	Dr, D_L	4S	↑
Parallel In/Serial In/Parallel Out Bidirectional	198	8	Dr, D_L	8S	↑
Parallel In/Serial In/Parallel Out Bidirectional	40194	4	Dr, D_L	4S	↑
Parallel In/Serial In/Parallel Out Bidirectional, 3-State	299	8	Dr, D_L	8S	↑
Parallel In/Serial In/Parallel Out Bidirectional, 3-State	323	8	Dr, D_L	8S (I/O)	↑
Parallel In/Serial In/Parallel Out Bidirectional, 3-State	40194	4	Dr, D_L	4S	↑

S – Synchronous, A – Asynchronous

© IC MASTER 1984

FUNCTION CROSS REFERENCE GUIDE

LATCHES

FUNCTION	DEVICE NUMBER	COMMON CLEAR (LEVEL)	ENABLE INPUT (LEVEL)	OUTPUT
Quad D	75		2 (H)	True, Comp
Quad D	375		2 (H)	True, Comp
Quad D	4042		2 (H)	True
Quad SR	279			True
Quad SR, 3-State	4043			True
Quad SR, 3-State	4044			True
Dual 4-Bit Transparent	116	LOW	2 (L)	True
Dual 4-Bit Addressable	256	LOW	1 (L)	True
Dual 4-Bit, Strobed	4508	HIGH	1 (L)	True
6-Bit (2-Bit and 4-Bit)	8T3404		1 (L)	Comp
8-Bit Addressable	259	LOW	1 (H)	True
8-Bit Addressable	4724	HIGH	1 (L)	True
8-Bit Addressable	9334	LOW	1 (L)	True
Octal, 3-State	373		1 (H)	True
Octal Inverting, 3-State	533		1 (H)	Comp
Octal Transparent, 3-State	40373		1 (H)	True
Octal Transparent, 3-State	8TS805		1 (H)	True
Octal Inverting, 3-State	8TS807		1 (H)	Comp
Octal, 3-State with MOS Compatible Outputs	363		1 (H)	True

MULTIPLEXERS

FUNCTION	DEVICE NUMBER	ENABLE INPUT (LEVEL)	SELECT INPUTS	OUTPUT
Quad 2-Input	157	1 (L)	1	True
Quad 2-Input	158	1 (L)	1	True
Quad 2-Input	298	Clocked ⌉L	1	True, Latched
Quad 2-Input	398	1 (H)	1	True, Comp Registered
Quad 2-Input	399	1 (H)	1	True, Registered
Quad 2-Input	4019		2	True
Quad 2-Input	4519		2	True
Quad 2-Input	8266		2	True
Quad 2-Input	9322	1 (L)	1	True
Quad 2-Input, 3-State	257		1	True
Quad 2-Input, 3-State	258		1	Comp
Quad 2-Input, OC	8234		2	Comp
Dual 4-Input	153	2 (L)	2	True, Comp
Dual 4-Input	352	2	2	Comp
Dual 4-Input	9309		2	True, Comp
Dual 4-Input	4539	2 (L)	2	True
Dual 4-Input, 3-State	253		2	True
Dual 4-Input, 3-State	353	2	2	Comp
8-Input	9312	1 (L)	3	True, Comp
8-Input	151	1 (L)	3	True, Comp
8-Input, 3-State	251		1	True, Comp
8-Input, 3-State	356	1 (L)	3	True, Latched
8-Input, 3-State	354	2 (L)	3	True, Latched
8-Input, 3-State	4512	1 (L)	3	True
16-Input	150	1 (L)	4	Comp

ANALOG MULTIPLEXERS/DEMULTIPLEXERS AND SWITCHES

FUNCTION	DEVICE NUMBER
Triple 2-Channel Mux/Demux	4053
Dual 4-Channel Mux/Demux	4052
8-Channel Mux/Demux	4051

FUNCTION	DEVICE NUMBER
16-Channel Mux/Demux	4066
Quad Bilateral Switches	4016
Quad Bilateral Switches	4067

FUNCTION CROSS REFERENCE GUIDE

COUNTERS

FUNCTION	DEVICE NUMBER	MODULUS	PARALLEL ENTRY	PRESETTABLE	CLOCK EDGE
Asynchronous	90	2×5			↓
Asynchronous	290	2×5			↓
Asynchronous	92	2×6			↓
Asynchronous	93	2×8			↓
Asynchronous	293	2×8			↓
Asynchronous	176	2×5	A	X	↓
Asynchronous	177	2×8	A	X	↓
Asynchronous	197	2×8	A	X	↓
Asynchronous	290	2×5			↓
Asynchronous	293	2×8			↓
Asynchronous	390	2×5			↓
Asynchronous	393	2×8			↓
Asynchronous	490	2×5			↓
Asynchronous	4020	12			↓
Asynchronous	4024	7			↓
Asynchronous	4040	14			↓
Asynchronous, with Oscillator	4060	14			
Synchronous	160	10	S	X	↑
Synchronous	161	16	S	X	↑
Synchronous	162	10	S	X	↑
Synchronous	163	16	S	X	↑
Synchronous	4526	16	A		↑ or ↓
Synchronous	40161	16	S	X	↑
Synchronous	40163	16	S	X	↑
Synchronous (Dual)	4518	10			↑ or ↓
Synchronous (Dual)	4520	16			↑ or ↓
Up/Down	168	10	S	X	↑
Up/Down	169	16	S	X	↑
Up/Down	190	10	A	X	↑
Up/Down	191	16	A	X	↑
Up/Down	192	10	A	X	↑
Up/Down	193	16	A	X	↑
Up/Down	269	8	S	X	↑
Up/Down	4029	10, 16	A	X	↑
Up/Down	4510	10	A	X	↑
Up/Down	4516	16	A	X	↑
Up/Down	40193	16	A	X	↑
Up/Down, 3-State	568	10	S	X	↑
Up/Down, 3-State	569	16	S	X	↑
Up/Down, 3-State	579	8	S (I/O)	X	↑
Up/Down, 3-State	779	8	S (I/O)	X	↑
Frequency Divider	4059	Programmable 3 to 15,999			↑
Johnson	4017	10			↑ or ↓
Johnson	4018	5	A		↑
Johnson	4022	8			↑ or ↓

S = Synchronous, A = Asynchronous

© IC MASTER 1984

FUNCTION CROSS REFERENCE GUIDE

TRI-STATE BUFFERS, DRIVERS AND TRANSCEIVERS

FUNCTION	DEVICE NUMBER	OUTPUT
Quad Buffer	125	True
Quad Buffer	126	True
Quad Bus Driver	8T09	
Quad Bus Transceiver	242	Comp
Quad Bus Transceiver	243	True
Quad Bus Transceiver	8T34	Comp
Quad Bus Transceiver	8T126	Comp
Quad Bus Transceiver	8T127	Comp
Quad Bus Transceiver	8T128	True
Quad Bus Transceiver	8T129	True
Hex Buffer	365	True
Hex Inverter	366	Comp
Hex Buffer, 4-Bit and 2-Bit	367	True
Hex Inverter, 4-Bit and 2-Bit	368	Comp
Hex Buffer	8T95	True
Hex Inverter	8T96	Comp
Hex Buffer	8T97	True
Hex Inverter	8T98	Comp
Hex Buffer	40097	True
Hex Buffer	40098	Comp
Octal Buffer	240	Comp
Octal Buffer	241	True
Octal Buffer	244	True
Octal Buffer	40240	Comp
Octal Buffer	40244	True
Octal Buffer	540	Comp
Octal Buffer	541	True
Octal Transceiver	245	True
Octal Transceiver	545	True
Octal Transceiver with IEEE-488 Termination Resistors	588	True
Octal Transceiver	620	Comp
Octal Transceiver	623	True
Octal Transceiver	640	Comp
Octal Transceiver	643	True, Comp
Octal Transceiver	645	True
Octal Transceiver	40245	True
Octal Transceiver	8T125	Comp
Octal Transceiver/Register	646	True
Octal Transceiver/Register	648	Comp

LEVEL TRANSLATORS

FUNCTION	DEVICE NUMBER
Hex Inverting Buffer, Up to 15V Input, TTL Level Output	4049
Hex Non-Inverting Buffer, Up to 15V Input, TTL Level Output	4050
Quad Voltage Translator, 3-State, TTL Input, 15V Output	4104
Quad Transceiver, MOS/CMOS to TTL	8T26
Quad Transceiver, MOS/CMOS to TTL	8T28

PRIORITY ENCODERS

FUNCTION	DEVICE NUMBER	INPUT ENABLE (LEVEL)	INPUT/OUTPUT (LEVEL)
8-to-3	148	LOW	Active-LOW
8-to-3	4532	HIGH	Active-HIGH
10-to-4 (BCD)	147		Active-LOW

© IC MASTER 1984

FUNCTION CROSS REFERENCE GUIDE

DECODERS/DEMULTIPLEXERS

FUNCTION	DEVICE NUMBER	ADDRESS INPUTS	ENABLE (LEVEL)	OUTPUT (LEVEL)
Dual 1 of 4	139	2 + 2	1 (L) + 1 (L)	4 (L) + 4 (L)
Dual 1 of 4	155	2	2 (L) + 1 (L), 1 (H)	4 (L) + 4 (L)
Dual 1 of 4	156	2	2 (L) + 1 (L), 1 (H)	4 (L) + 4 (L)
Dual 1 of 4	4555	2 + 2	1 (L) + 1 (L)	4 (H)
Dual 1 of 4	4556	2 + 2	1 (L) + 1 (L)	4 (L)
1 of 8	138	3	2 (L) 1 (H)	8 (L)
1 of 8	82S50	4 (BCD)		8 (L)
1 of 10	42	4 (BCD)		10 (L)
1 of 10, OC	45	4 (BCD)		10 (L)
1 of 10, OC	145	4 (BCD)		10 (L)
1 of 10, OC	445	4 (BCD)		10 (L)
1 of 10	4028	4 (BCD)		10 (H)
1 of 10	9301	4 (BCD)		10 (L)
1 of 10	82S52	4 (BCD)		10 (L)
1 of 16	154	4	2 (L)	16 (L)
1 of 16	4514	4 (Latched)	1 (L)	16 (H)
1 of 16	4515	4 (Latched)	1 (L)	16 (L)
BCD to 7 Segment Decoder/Driver	4511	4 (Latched)	1 (L)	7 (H)
BCD to 7 Segment Decoder/Driver	4543	4 (Latched)		7 (H)

BUFFERS, DRIVERS AND RECEIVERS

FUNCTION	DEVICE NUMBER	OUTPUT
Quad 2-Input NOR Buffer	128	
Quad Buffer	4041	True, Comp
Hex Buffer	4049	Comp
Hex Buffer	4050	True
Strobed Hex Inverter/Buffer	4502	Comp
Dual 4-Input NAND Line Driver	140	
Dual Line Driver (AND/OR)	8T13	
Dual EIA-232B/MIL Line Driver	8T15	Comp
Dual EIA-232B/MIL Receiver	8T16	
Dual Line Driver for IBM 360/370 Interface	8T23	
Dual Line Receiver for IBM 360/370 Interface	8T24	
Hex Bus Receiver (DM8837)	8T37	

OPEN COLLECTOR, BUFFERS, DRIVERS, AND TRANSCEIVERS

FUNCTION	DEVICE NUMBER	OUTPUT
Quad Bus Transceiver	8T38	
Quad Bus Transceiver	8T26	Comp
Quad Bus Transceiver	8T28	True
Hex Inverter	05	Comp
Hex Inverter/Driver	06	Comp
Hex Buffer/Driver	07	True
Hex Buffer/Driver	16	Comp.
Hex buffer/Driver	17	True
Octal Transceiver	621	True
Octal Transceiver	622	Comp
Octal Transceiver	641	True
Octal Transceiver	642	Comp
Octal Transceiver and Registers	647	True
Octal Transceiver and Registers	649	Comp
BCD to Decimal Decoder/Driver	45	Active-LOW
BCD to Decimal Decoder/Driver	145	Active-LOW

© IC MASTER 1984

FUNCTION CROSS REFERENCE GUIDE

MULTIVIBRATORS AND PHASE LOCKED LOOPS

FUNCTION	DEVICE NUMBER
Monostable Multivibrator	121
Dual Retriggerable Monostable Multivibrator	123
Dual Monostable Multivibrator	221
Dual Retriggerable Monostable Multivibrator	423
Dual Monostable Multivibrator	4528
Dual Retriggerable Monostable Multivibrator	4538
Monostable/Astable Multivibrator	4047
Digital Phase Locked Loop Filter	297
Phase Locked Loop	4046

ARITHMETIC FUNCTIONS

FUNCTION	DEVICE NUMBER
4-Bit Binary Full Adder, Ripple Carry	83
4-Bit Binary Full Adder, Fast Carry	283
4-Bit Binary Full Adder	4008
4-Bit BCD Full Adder	82S83
4-Bit ALU	181
4-Bit ALU	82S83
Look Ahead Carry Generator	182

COMPARATORS

FUNCTION	DEVICE NUMBER
4-Bit Comparator	85
4-Bit Comparator	4585
5-Bit Comparator	9324
8-Bit Comparator	521
8-Bit Comparator	688

PARITY

FUNCTION	DEVICE NUMBER
8-Bit Odd/Even Parity Checker	180
8-Bit Parity Generator/Checker	8262
8-Bit Parity Generator/Checker	82S62
9-Bit Odd/Even Parity Generator/Checker	280
13-Bit Parity Generator/Checker	4531

SPECIAL FUNCTIONS

FUNCTION	DEVICE NUMBER
Dual-Port RAM Controller with Dynamic Memory Refresh	764
IEC/IEEE Bus Interface	4738
Frequency Synthesizer	4750
A.C. Motor Control Circuit	4752
18-Element Bar Graph LCD Driver	4754

© IC MASTER 1984

FAMILY CHARACTERISTIC SPECIFICATIONS

COMPARISON OF DC CHARACTERISTICS

Parameter			10K	100K	TTL				CMOS			Units
					STD	S	FAST	LS	HC	HCT	4000B	
V_{CC} V_{DD} V_{EE}	Operating supply voltage		−4.7 to −6.2	−4.2 to −4.8	5 ± 5%	5 ± 5%	5 ± 5%	5 ± 5%	2 to 6	5 ± 10%	3 to 15	V
T_A	Operating temperature		0 to 75	0 to 85	0 to 70	0 to 70	0 to 70	0 to 70	−40 to 85	−40 to 85	−40 to 85	°C
V_I	Max input voltage range[1]		V_{EE} to GND	V_{EE} to +0.5V	−0.5 to 5.5	−0.5 to 5.5	−0.5 to V_{CC}	−0.5 to 7.0	0 to V_{CC}	0 to V_{CC}	−0.5 to V_{DD} + 0.5	V
V_{IH}	High-level input voltage		−1.105[4]	−1.025[3]	2.0	2.0	2.0	2.0	3.15	2.0	3.5	V
V_{IL}	Low-level input voltage		−1.475[4]	−1.620[3]	0.8	0.8	0.8	0.8	0.9	0.8	1.5	V
V_{OH}	High-level output voltage	All outputs	−0.96[4]	−1.025[3]	2.4	2.5	2.7	2.7	4.4[1]	4.4	4.95[2]	V
		STD							3.98[1]	3.98		
		Bus Drivers (3-states)				2.4		2.4	3.98[1]	3.98		
V_{OL}	Low-Level output voltage	All outputs	−1.650[4]	−1.620[3]	0.4	0.5	0.5	0.5	0.1	0.1	0.05	V
		STD							0.26	0.26		
		Bus drivers							0.26	0.26		
I_{OL}	Low-level output current										0.44	mA
I_{OZH}	Off-State output current High-level voltage applied				40	50	50	20	0.5	0.5	1.6	μA
I_{OZL}	Off-State output current Low-level voltage applied				−40	−50	−50	−20	−0.5	−0.5	−1.6	μA

NOTES
1. V_{CC} = 4.5 volts
2. V_{CC} = 5.0 volts
3. V_{EE} = −4.5V, V_{CC} = V_{CCA} = GND
4. V_{EE} = −5.2V, V_{CC} = GND

COMPARISON OF SPEED/POWER CHARACTERISTICS

Symbol	Parameter	ECL		TTL				CMOS			Units
		10K[3]	100K[4]	STD	S	FAST	LS	HC	HCT	4000B[2]	
I_G	Quiescent Supply Current/Gate	4.8	8.9	2.0	3.6	1.0	0.5	0.3	0.3	0.2	mA
P_G	Power/Gate (Quiescent)	25	40	10	18	4	2.5	1.5[1]	1.5[1]	1[1]	mW
t_P	Propagation Delay	2	0.8	10	4	3	10	10	10	60	ns
pJ	Speed Power Product	50	32	20	72	12	25	15	15	60	
f_{MAX}	Clock Frequency (D-Flip Flop)	150	375	25	80	125	33	33	33	8	MHz
f_{MAX}	Clock Frequency (Counter)	150		25	30	125	40	40	40	7	MHz

NOTES
1. At 1MHz
2. V_{DD} = 5V
3. V_{EE} = −5.2V
4. V_{EE} = −4.5V

© IC MASTER 1984

FAMILY CHARACTERISTIC SPECIFICATIONS

COMPARISON OF PROPAGATION DELAYS OF COMMON LOGIC DEVICES

Parameter	TTL				CMOS				Units
	STD[4]	S[4]	FAST[3]	LS[4]	HC[3]	HCT[3]	4000B $V_{DD}=5$[4]	4000B $V_{DD}=15$[4]	
Gate: NAND or NOR	7400	74S00	74F00	74LS00	74HC00	74HCT00	4001B	4001B	
t_{PLH} Typical	11	3	2.9	9	10 (8)[4]	10 (8)[4]	50	20	ns
t_{PLH} Max	22	4.5	5.0	15	20	20	100	35	ns
t_{PHL} Typical	7	3	1.8	10	10 (8)[4]	10 (8)[4]	60	26	ns
t_{PHL} Max	15	5.0	4.3	15	20	20	120	40	ns
Flip-Flop: D-type (Clock to Q)	7474	74S74	74F74	74LS74	74HC74	74HCT74	4013B	4013B	
t_{PLH} Typical	17	6	5.3	13			100	30	ns
t_{PLH} Max	25	9	6.8	25	20 (18)[4]	20 (18)[4]	205	60	ns
t_{PHL} Typical	20	6	6.2	25			110	30	ns
t_{PHL} Max	40	9	8.0	40	20 (18)[4]	20 (18)[4]	220	60	ns
f_{MAX} Min	15	75	100	25	50 (60)[4]	50 (60)[4]	6	18	MHz
f_{MAX} Typical	25	110	125	33			12	36	MHz
Counter (Clock to Q)	74163	74S163[5]	74F163	74LS163	74HC163	74HCT163	40163B	40163B	
t_{PLH} Typical	13	8	5	13			75	20	ns
t_{PLH} Max	20	15	7	24	20 (18)[4]	20 (18)[4]	155	45	
t_{PHL} Typical	15	10	7	18			75	20	ns
t_{PHL} Max	23	15	10	27	20 (18)[4]	20 (18)[4]	155	45	
f_{MAX} Min	25	40	100	25	50 (60)[4]	50 (60)[4]	5	20	MHz
f_{MAX} Typical	32	70	125	32			11	45	

NOTES
1. $V_{EE}=-5.2V$
2. $V_{EE}=-4.5V$
3. $C_L=50$ pF
4. $C_L=15$ pF
5. For comparison only Signetics does not produce a Schottky version of the 163 counter.

INTERFACING COMMON LOGIC FAMILIES

From	To	ECL		TTL				CMOS			
		10K	100K	STD	S	FAST	LS	HC	HCT	4000B $V_{DD}=5V$	4000B $V_{DD}>5V$
ECL	10K	D	D	T	T	T	T	T	T	T	T
	100K	D	D	T	T	T	T	T	T	T	T
TTL	STD	T	T	D	D	D	D	P	D	P	T
	S	T	T	D	D	D	D	P	D	P	T
	FAST	T	T	D	D	D	D	P	D	P	T
	LS	T	T	D	D	D	D	P	D	P	T
CMOS	HC	T	T	D	D	D	D	D	D	D	T
	HCT	T	T	D	D	D	D	D	D	D	T
	4000B at 5V	T	T	D	D	D	D	D	D	D	T
	4000B $V_{DD}>5V$	T	T	T	T	T	T	T	T	T	D

D — Direct interface
P — Pullup resistor required
T — Level translator required

© IC MASTER 1984

8200/82S00/9300/9600 AVAILABILITY GUIDE

DEVICE TYPE	DESCRIPTION	AVAIL-ABILITY
8234	2-Input, 4-Bit Digital Multiplexer	A
82S41	Quad Exclusive-OR Gate	C
8242	Quad Exclusive-NOR Gate	C
82S42	Quad Exclusive-NOR Gate	C
82S50	Binary-to-Octal Decoder	C
82S52	BCD-to-Decimal Decoder	C
8262	8-Bit Parity Generator/Checker	C
82S62	8-Bit Parity Generator/Checker	C
8266	2-Input, 4-Bit Digital Multiplexer	A
8271	4-Bit Shift Register	A
82S71	4-Bit Shift Register	C
8273	10-Bit SIPO Shift Register	A
8274	10-Bit PISO Shift Register	C
82S82	4-Bit Arithmetic Unit	C
82S83	4-Bit BCD Adder	C
8815	Dual 4-Input NOR	C
8881	Quad 2-Input NAND, OC	C
8890	Hex Inverter	C
8891	Hex Inverter	A
9301	BCD-to-Decimal Decoder	A
9309	Dual 4-Input Multiplexer	A
9310	4-Bit Decade Counter	C
9312	8-Input Digital Multiplexer	A
9316	4-Bit Binary Counter	C
9322	Data Selector/Multiplexer	C
9324	5-Bit Comparator	C
9334	8-Bit Addressable Latch	A
9386	Quad Exclusive-NOR	A
9601	Retriggerable Monostable Multivibrator	A
9602	Dual Monostable Multivibrator	C
8T09	Quad Bus Driver, 3-State	A
8T10	Quad D-Type Bus Latch	A
8T13	Dual Line Driver	A
8T15	Dual EIA/MIL Line Receiver	C
8T16	Dual Communications EIA/MIL Line Receiver	A

A = Available in Military C = Commercial Grade Only

DEVICE TYPE	DESCRIPTION	AVAIL-ABILITY
8T20	Bidirectional Monostable Multivibrator	C
8T22	Retriggerable Monostable Multivibrator (74122, 9601)	C
8T23	Dual Line Driver for IBM 360/370 Interface (75123)	C
8T24	Triple Line Receiver for IBM 360/370 Interface (75124)	C
8T26A	Quad Bus Driver/Receiver	A
8T28	Quad Bus Driver/Receiver, Non-Inverting	A
8T34	Quad Bus Transceiver (DM8834)	C
8T37	Hex Bus Receiver (DM8837)	C
8T38	Quad Bus Transceiver (DM8838)	C
8T95	Hex Buffer	C
8T96	Hex Inverter	C
8T97	Hex Buffer	A
8T98	Hex Inverter	A
8T125	Octal Transceiver, Inverting	A
8T126	Quad Bus Driver/Receiver, Inverting	A
8T127	Quad Bus Driver/Receiver, Inverting	A
8T128	Quad Bus Driver/Receiver, Non-Inverting	A
8T129	Quad Bus Driver/Receiver, Non-Inverting	A
8T245	Octal Transceiver	C
8T380	Quad Bus Receiver	C
8T3404	6-Bit Latch	C
8TS805	Octal Transparent Latch	A
8TS806	Octal Clocked D Latch	A
8TS807	Octal Transport Latch, Inverting Outputs	C
8TS808	Octal Clocked D Latch, Inverting Outputs	C
8TLS803	8-Bit Binary Counter	C
8TLS810	8-Bit Decade Counter	C

© IC MASTER 1984

FAST™* FAMILY CHARACTERISTICS

ABSOLUTE MAXIMUM RATINGS

(Operation beyond the limits set forth in this table may impair the useful life of the device. Unless otherwise noted, these limits are over the operating free-air temperature range.)

PARAMETER		54F	74F	UNIT
V_{CC}	Supply voltage	−0.5 to +7.0	−0.5 to +7.0	V
V_{IN}	Input voltage	−0.5 to +7.0	−0.5 to +7.0	V
I_{IN}[2]	Input current	−30 to +5	−30 to +5	mA
V_{OUT}[1]	Voltage applied to output in HIGH output state	−0.5 to V_{CC}	−0.5 to V_{CC}	V
I_{OUT}[3]	Current applied to output in LOW output state	40	40	mA
T_A	Operating free-air temperature range	−55 to +125	0 to 70	°C

NOTES
1. For 3-state outputs, V_{OUT} = −0.5V to 5.5V with V_{CC} = 0V.
2. For NPN input parts, input current above 1 mA is clamped.
3. I_{OUT} is specified at twice the rated I_{OL} for buffer line driver functions.

RECOMMENDED OPERATING CONDITIONS

PARAMETER			54/74F			UNIT
			Min	Typ	Max	
V_{CC}	Supply voltage	Mil	4.5	5.0	5.5	V
		Com'l	4.75	5.0	5.25	V
V_{IH}	HIGH-level input voltage		2.0			V
V_{IL}	LOW-level input voltage				0.8	V
I_{IK}	Input clamp current				−18	mA
I_{OH}	HIGH-level output current				−1	mA
I_{OL}	LOW-level output current				20	mA
T_A	Operating free-air temperature	Mil	−55		125	°C
		Com'l	0		70	°C

FAST™ PRODUCT GUIDE/AVAILABILITY

DEVICE	DESCRIPTION	AVAIL-ABILITY
74F00	Quad 2-Input NAND Gate	A
74F02	Quad 2-Input NOR Gate	A
74F04	Hex Inverter	A
74F08	Quad 2-Input AND Gate	A
74F10	Triple 3-Input NAND Gate	A
74F11	Triple 3-Input AND Gate	A
74F13	Dual 4-Input Schmitt Trigger	A
74F14	Hex Schmitt Trigger	A
74F20	Dual 4-Input NAND Gate	A
74F32	Quad 2-Input OR Gate	A
74F37	Quad 2-Input NAND Buffer	1H 84
74F38	Quad 2-Input NAND Buffer, OC	1H 84
74F40	Quad 4-Input NAND Buffer	1H 84
74F64	AND/OR Invert Gate	A
74F74	Dual D-Type Flip-Flop	A
74F85	4-Bit Magnitude Comparator	1H 84
74F86	Quad 2-Input Exclusive-OR Gate	A
74F109	Dual JK Flip-Flop	A
74F112	Dual JK Flip-Flop	2H 84
74F113	Dual JK Flip-Flop	2H 84
74F114	Dual JK Flip-Flop	2H 84
74F132	Quad 2-Input Schmitt Trigger	A
74F138	1-of-8 Decoder/Demultiplexer	A
74F139	Dual 1-of-4 Decoder/Demultiplexer	A
74F148	8-Bit Priority Encoder	2H 84
74F151	8-Input Multiplexer	1H 84
74F153	Dual 4-Input Multiplexer	1H 84
74F157	Quad 2-Input Multiplexer	A
74F158	Quad 2-Input Multiplexer	A
74F160	BCD Decade Counter, Asynchronous Reset	2H 84
74F161	4-Bit Binary Counter, Asynchronous Reset	2H 84
74F162	BCD Decade Counter, Synchronous Reset	2H 84
74F163	4-Bit Binary Counter, Synchronous Reset	2H 84
74F164	8-Bit PISO Shift Register	1H 84
74F168	Up/Down Decade Counter	2H 84
74F169	Up/Down Binary Counter	2H 84
74F174	Hex D Flip-Flop with Common Master Reset	1H 84
74F175	Quad D Flip-Flop with Common Master Reset	1H 84
74F181	Arithmetic Logic Unit	1H 84
74F182	Carry Look-Ahead Generator	2H 84
74F190	Up/Down Decade Counter	1H 84
74F191	Up/Down Binary Counter	1H 84
74F192	Up/Down Decade Counter	1H 84
74F193	Up/Down Binary Counter	1H 84
74F194	4-Bit Bidirectional Universal Shift Register	A

A = Available; 1H 84 = 1st Half of 1984; 2H 84 = 2nd Half of 1984

DEVICE	DESCRIPTION	AVAIL-ABILITY
74F195	4-Bit Parallel Access Shift Register	1H 84
74F198	8-Bit Bidirectional Universal Shift Register	2H 84
74F240	Octal Inverting Bus/Line Driver	1H 84
74F241	Octal Bus/Line Driver	A
74F242	Quad Bus Transceiver	1H 84
74F243	Quad Bus Transceiver	A
74F244	Octal Bus/Line Driver	A
74F245	Octal Bus Transceiver	1H 84
74F251	8-Input Multiplexer, 3-State	1H 84
74F253	Dual 4-Input Multiplexer, 3-State	1H 84
74F256	Dual 4-Bit Addressable Latch	1H 84
74F257	Quad 2-Input Multiplexer, 3-State	A
74F258	Quad 2-Input Multiplexer, 3-State	A
74F259	8-Bit Addressable Latch	1H 84
74F269	8-Bit Up/Down Counter	1H 84
74F273	Octal D Flip-Flop	1H 84
74F280A	9-Bit Parity Generator/Checker	A
74F283	4-Bit Adder	2H 84
74F298	Quad 2-Input Multiplexer	A
74F299	Octal Shift/Storage Register, 3-State	2H 84
74F322	Octal Shift/Storage Register, 3-State	1H 84
74F323	Octal Shift/Storage Register, 3-State	1H 84
74F350	4-Bit Shifter, 3-State	A
74F352	Dual 4-Input Multiplexer (Inverted '153)	1H 84
74F353	Dual 4-Input Multiplexer (Inverted '253)	1H 84
74F365	Hex Buffer with Common Enable, 3-State	1H 84
74F366	Hex Inverter with Common Enable, 3-State	1H 84
74F367	Hex Buffer, 4-Bit and 2-Bit, 3-State	1H 84
74F368	Hex Inverter, 4-bit and 2-Bit, 3-State	1H 84
74F373	Octal D Latch, 3-State	A
74F374	Octal D Flip-Flop, 3-State	A
74F377	Octal D-Type Flip-Flop with Enable	A
74F378	Hex D Flip-Flop with Enable	2H 84
74F379	Quad D Flip-Flop with Enable	2H 84
74F395	4-Bit Cascadable Shift Register, 3-State	1H 84
74F398	4-Bit Flip-Flop, True and Complement Outputs	2H 84
74F399	4-Bit Flip-Flop, True and Complement Outputs	2H 84
74F521	Octal Comparator	A
74F524	8-Bit Register Comparator	1H 84
74F533	Inverting Octal D Latch, 3-State	A
74F534	Inverting Octal D Flip-Flop, 3-State	A
74F545	Octal Bus Transceiver	1H 84
74F568	4-Bit Binary Up/Down Counter, 3-State	2H 84
74F569	4-Bit Decade Up/Down Counter, 3-State	2H 84
74F579	8-Bit Up/Down Counter, Common I/O	1H 84

© IC MASTER 1984

FAST™* FAMILY CHARACTERISTICS

54F/74F FAMILY CHARACTERISTICS[1]

SYMBOL	PARAMETER		LIMITS[2] Min	Typ[3]	Max	UNITS	V_{CC}[4]	CONDITIONS[2]
V_{IH}	Input HIGH voltage		2.0			V		Recognized as a HIGH signal over recommended V_{CC} and T_A range
V_{IL}	Input LOW voltage				0.8	V		Recognized as a LOW signal over recommended V_{CC} and T_A range
V_{IK}	Input clamp diode voltage				-1.2	V	Min	$I_{IN} = -18$ mA
V_{OH}	Output HIGH voltage	Std[6] Mil	2.5	3.4		V	Min	$I_{OH} = 20\ \mu A$ multiplied by output HIGH U.L. shown on data sheet
		Std[6] Com'l	2.7	3.4				
V_{OL}	Output LOW voltage			0.35	0.5	V	Min	$I_{OL} = -0.6$ mA multiplied by output LOW U.L. shown on data sheet
I_{IH}	Input HIGH current	1.0 U.L.		1	20	μA	Max	$I_{IH} = 20\ \mu A$ multiplied by input HIGH U.L. shown on data sheet; $V_{IH} = 2.7V$
		2.0 U.L.		2	40			
		n U.L.			n(40)			
I_I	Input HIGH current, breakdown test, all inputs			5	100	μA	Max	$V_{IN} = 7.0V$
	NPN inputs:[7] Input clamp current			500	1000			
I_{IL}	Input LOW current	1.0 U.L.		-0.4	-0.6	mA	Max	$I_{IL} = -0.6$ mA multiplied by input LOW U.L. shown on data sheet; $V_{IN} = 0.5V$
		2.0 U.L.		-0.8	-12			
		n U.L.			n(-0.6)			
	NPN inputs	0.33 U.L.			-0.002			
I_{OZH}	3-state output OFF current HIGH			2	50	μA	Max	$V_{OUT} = 2.4V$
I_{OZL}	3-state output OFF current LOW			2	-50	μA	Max	$V_{OUT} = 0.5V$
I_{OS}[5]	Output short-circuit current	Standard[6]/ 3-State	-60	-80	-150	μA	Max	$V_{OUT} = 0V$
		Buffers/Line Drivers	-100	-150	-225			

NOTES
1. Unless otherwise noted, conditions and limits apply throughout the temperature range for which the particular device type is rated. The ground pin is the reference level for all applied and resultant voltages.
2. Unless otherwise stated on individual data sheets.
3. Typical characteristics refer to $T_A = +25°C$ and $V_{CC} = +5.0V$.
4. Min and Max refer to the values listed in the table of recommended operating conditions.
5. For testing I_{OS}, the use of high-speed test apparatus and/or sample-and-hold techniques are preferable in order to minimize internal heating and more accurately reflect operational values. Otherwise, prolonged shorting of a HIGH output may raise the chip temperature well above normal and thereby cause invalid readings in other parameter tests. In any sequence of parameter tests, I_{OS} tests should be performed last.
6. Standard refers to the totem-pole pull-up circuitry commonly used for the particular family, as distinguished from buffers, line drivers or 3-state outputs.
7. Used as an input clamp current test at maximum input voltage for parts with an NPN input structure. This is not a leakage test.

© IC MASTER 1984

FAST™ PRODUCT GUIDE/AVAILABILITY

DEVICE	DESCRIPTION	AVAIL-ABILITY
74F588	GPIB Compatible Octal Transceiver	1H 84
74F595	8-Bit Shift Register with Output Latch	2H 84
74F596	8-Bit Shift Register with Output Latch	2H 84
74F597	8-Bit Shift Register with Input Latch	2H 84
74F598	8-Bit Shift Register with Input Latch	2H 84
74F604	Dual 8-Bit Latch	1H 84
74F605	Dual 8-Bit Latch	1H 84
74F620	Octal Bus Transceiver	1H 84
74F621	Octal Bus Transceiver	1H 84
74F622	Octal Bus Transceiver	1H 84
74F623	Octal Bus Transceiver	1H 84
74F630	Memory Error Detector/Corrector, 3-State	1H 84
74F631	Memory Error Detector/Corrector, OC	1H 84
74F646	Octal Bus Transceiver and Register	1H 84
74F647	Octal Bus Transceiver and Register	1H 84

DEVICE	DESCRIPTION	AVAIL-ABILITY
74F648	Octal Bus Transceiver and Register	1H 84
74F649	Octal Bus Transceiver and Register	1H 84
74F655	Octal Inverting Buffer with Parity Generator-Checker	1H 84
74F656	Octal Buffer with Parity Generator-Checker	1H 84
74F657	Octal Bus Transceiver with Parity Generator-Checker	1H 84
74F673	16-Bit Serial-In/Parallel-Out Shift Register	2H 84
74F674	16-Bit Parallel-In/Serial-Out Shift Register	2H 84
74F675	16-Bit Serial-In/Parallel-Out Shift Register with SO Capability	2H 84
74F676	16-Bit Parallel-In/Serial-Out Shift Register with SO Capability	2H 84
74F779	8-Bit Counter	1H 84

A = Available; 1H 84 = 1st Half of 1984; 2H 84 = 2nd Half of 1984

FAST ORDERING INFORMATION

PACKAGES	COMMERCIAL RANGES $V_{CC} = 5V \pm 5\%$; $T_A = 0°C$ to $+70°C$	MILITARY RANGES $V_{CC} = 5V \pm 10\%$; $T_A = -55°C$ to $+125°C$
Plastic DIP	N74F--N	
Plastic SO[1]	N74F--D	
Ceramic DIP		S54F--F
Ceramic LLCC[2]		S54F--G

NOTES
1. SO package is surface-mounted micro-miniature DIP available 1984.
2. LLCC is a surface-mounted leadless chip carrier.

© IC MASTER 1984

'240 Octal Inverter Buffer (3-State)
'241 Octal Buffer (3-State)

- **Octal bus interface**
- **3-state buffer outputs sink 64mA**
- **15mA source current**

TYPE	TYPICAL PROPAGATION DELAY	TYPICAL SUPPLY CURRENT (Total)
74F240		
74F241	5.0ns	60mA

DESCRIPTION

The 'F240 and 'F241 are octal buffers that are ideal for driving bus lines or buffer memory address registers. The outputs are all capable of sinking 64mA and sourcing up to 15mA, producing very good capacitive drive characteristics. The device features two Output Enables, $\overline{OE}$, each controlling four of the 3-state outputs.

ORDERING CODE

PACKAGES	COMMERCIAL RANGES $V_{CC}=5V\pm5\%$; $T_A=0°C$ to $+70°C$	MILITARY RANGES $V_{CC}=5V\pm10\%$; $T_A=-55°C$ to $+125°C$
Plastic DIP	N74F240N • N74F241N	
Ceramic DIP		S54F240F • S54F241F

FUNCTION TABLE, 'F240

INPUTS				OUTPUTS	
$\overline{OE}_a$	I_a	$\overline{OE}_b$	I_b	$\overline{Y}_a$	$\overline{Y}_b$
L	L	L	L	H	H
L	H	L	H	L	L
H	X	H	X	(Z)	(Z)

INPUT AND OUTPUT LOADING AND FAN-OUT TABLE

PINS	DESCRIPTION	54F/74F (U.L.) High/Low	LOAD VALUE High/Low
$\overline{OE}_a$, $\overline{OE}_b$	3-State Output Enable Input (Active LOW)	1.0/1.67	20μA/1.0mA
OE_b	3-State Output Enable Input (Active HIGH)	1.0/1.67	20μA/1.0mA
I_{a0}–I_{a3}, I_{b0}–I_{b3}	Data Inputs ('F240)	1.0/1.67	20μA/1.0mA
I_{a0}–I_{a3}, I_{b0}–I_{b3}	Data Inputs ('F241)	1.0/2.67	20μA/1.6mA
	Data Outputs (Commercial)	150/106.7	3mA/64mA
	Data Outputs (Military)	150/80	3mA/48mA

NOTE
One (1.0) FAST unit load is defined as: 20μA in the HIGH state and 0.6mA in the LOW state.

FUNCTION TABLE, 'F241

INPUTS				OUTPUTS	
$\overline{OE}_a$	I_a	OE_b	I_b	Y_a	Y_b
L	L	H	L	L	L
L	H	H	H	H	H
H	X	L	X	(Z)	(Z)

H = HIGH voltage level
L = LOW voltage level
X = Don't care
(Z) = HIGH impedance (off) state

PIN CONFIGURATION

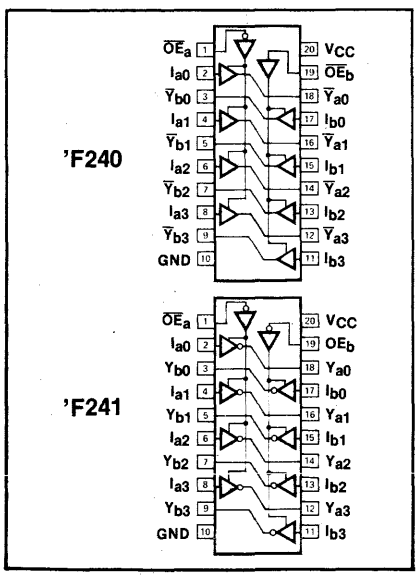

LOGIC SYMBOL

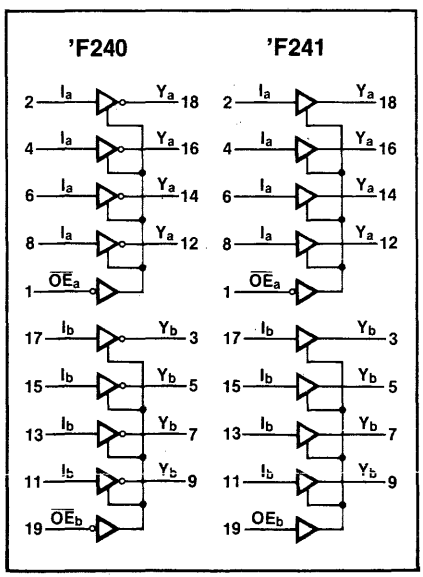

LOGIC SYMBOL (IEEE/IEC)

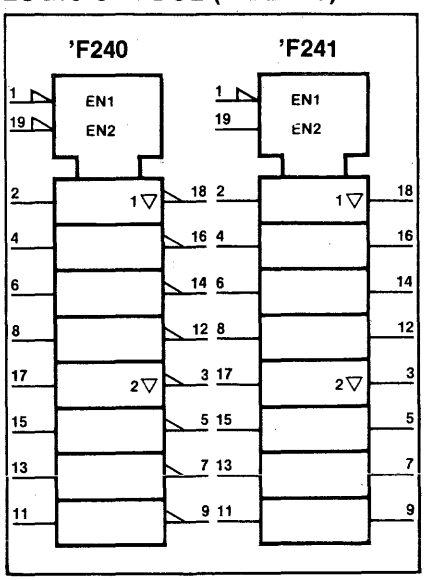

DIGITAL

Signetics

Octal Buffer (3-State)

- **Octal bus interface**
- **3-state buffer outputs sink 64mA**
- **15mA source current**

TYPE	TYPICAL PROPAGATION DELAY	TYPICAL SUPPLY CURRENT (Total)
74F244	4.2ns	60mA

ORDERING CODE

PACKAGES	COMMERCIAL RANGES V_{CC} = 5V ±5%; T_A = 0°C to +70°C	MILITARY RANGES V_{CC} = 5V ±10%; T_A = −55°C to +125°C
Plastic DIP	N74F244N	
Ceramic DIP		S54F244F

DESCRIPTION

The 'F244 is an octal buffer that is ideal for driving bus lines or buffer memory address registers. The outputs are all capable of sinking 64mA and sourcing up to 15mA, producing very good capacitive drive characteristics. The device features two Output Enables, $\overline{OE}$, each controlling four of the 3-state outputs.

FUNCTION TABLE

INPUTS				OUTPUTS	
$\overline{OE}_a$	I_a	$\overline{OE}_b$	I_b	Y_a	Y_b
L	L	L	L	L	L
L	H	L	H	H	H
H	X	H	X	(Z)	(Z)

H = HIGH voltage level
L = LOW voltage level
X = Don't care
(Z) = HIGH impedance (off) state

INPUT AND OUTPUT LOADING AND FAN-OUT TABLE

PINS	DESCRIPTION	54F/74F (U.L.) High/Low	LOAD VALUE High/Low
$\overline{OE}_a$	3-State Output Enable Input (Active LOW)	1.0/1.67	20μA/1.0mA
$\overline{OE}_b$	3-State Output Enable Input (Active LOW)	1.0/1.67	20μA/1.0mA
I_{a0}–I_{a3}, I_{b0}–I_{b3}	Data Inputs	1.0/2.67	20μA/1.6mA
Y_{a0}–Y_{a3}, Y_{b0}–Y_{b3}	Data Outputs (Commercial)	150/106.7	3mA/64mA
Y_{a0}–Y_{a3}, Y_{b0}–Y_{b3}	Data Outputs (Military)	150/80	3mA/48mA

NOTE
One (1.0) FAST unit load is defined as: 20μA in the HIGH state and 0.6mA in the LOW state.

PIN CONFIGURATION

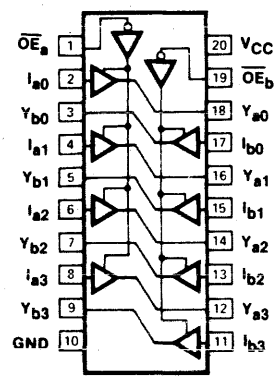

LOGIC SYMBOL

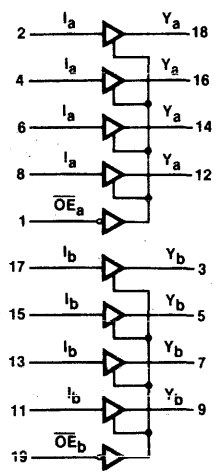

LOGIC SYMBOL (IEEE/IEC)

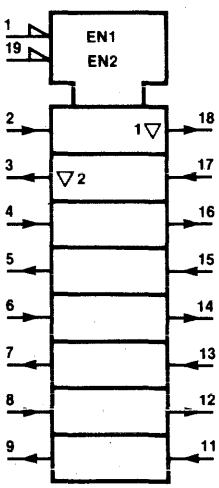

© IC MASTER 1984

TRANSCEIVER

FAST 54/74F245

Octal Transceiver (3-State)

- **Octal bidirectional bus interface**
- **3-State buffer outputs sink 64mA**
- **15mA source current**
- **High impedance NPN base inputs for reduced loading (20μA in LOW and HIGH states)**
- **Outputs are placed in Hi-Z state during power-off conditions**

TYPE	TYPICAL PROPAGATION DELAY	TYPICAL SUPPLY CURRENT (Total)
74F245		

ORDERING CODE

PACKAGES	COMMERCIAL RANGES V_{CC} = 5V ± 5%; T_A = 0°C to +70°C	MILITARY RANGES V_{CC} = 5V ± 10%; T_A = −55°C to +125°C
Plastic DIP	N74F245N	S54F245F
Ceramic DIP		S54F245W

INPUT AND OUTPUT LOADING AND FANOUT TABLE

PINS	DESCRIPTION	54F/74F (U.L.) High/Low	LOAD VALUE High/Low
$\overline{OE}$	Output Enable Input (Active LOW)	1.0/2.67	20μA/1.6mA
S/$\overline{R}$	Send Receive Input	1.0/1.33	20μA/0.79mA
A_0–A_7	3-State A Data Inputs	3.5/1.67	70μA/1mA
A_0–A_7	3-State A Data Outputs	50/33	1mA/20mA
B_0–B_7	3-State B Data Inputs	3.5/1.67	70μA/1mA
B_0–B_7	3-State B Data Outputs (Commercial) 3-State B Data Outputs (Military)	50/107 50/80	1mA/64mA 1mA/48mA

One (1.0) FAST Unit Load (Ful) is defined as: 20μA in the HIGH state and 0.6mA in the LOW state.
*Worst-case (disabled).

DESCRIPTION

The 'F245 is an octal transceiver featuring non-inverting 3-State bus compatible outputs in both send and receive directions. The outputs are all capable of sinking 64mA and sourcing up to 15mA, producing very good capacitive drive characteristics. The device features an Output Enable ($\overline{OE}$) input for easy cascading and a Send/Receive (S/$\overline{R}$) input for direction control. All of the inputs utilize Signetics NPN input structures to reduce input loading and reduce input capacitance. The 3-State outputs, B_0–B_7, have been designed to prevent output bus loading if the power is removed from the device.

FUNCTION TABLE

INPUTS		INPUTS/OUTPUTS	
$\overline{OE}$	S/$\overline{R}$	A_n	B_n
L	L	A = B	INPUTS
L	H	INPUT	B = A
H	X	(Z)	(Z)

H = HIGH voltage level
L = LOW voltage level
X = Don't care
(Z) = HIGH impedance "off" state

PIN CONFIGURATION

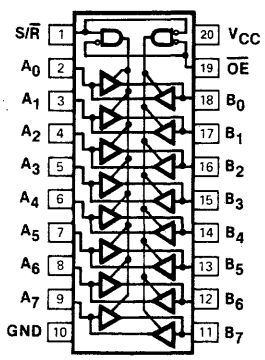

LOGIC SYMBOL

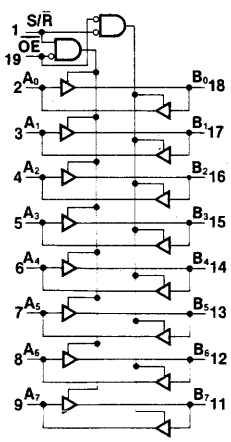

LOGIC SYMBOL (IEEE/IEC)

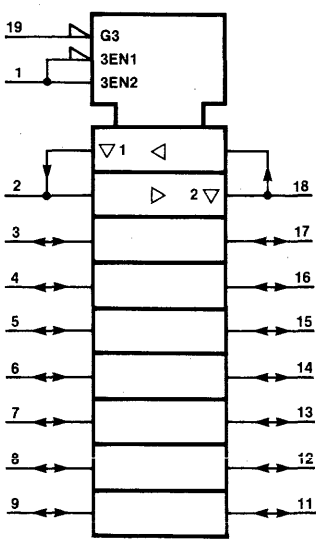

DIGITAL

Signetics

PARITY GENERATOR/CHECKER — FAST 54/74F280A

9-Bit Odd/Even Parity Generator/Checker

- **Buffered inputs — one normalized load**
- **Word-length easily expanded by cascading**
- **High impedance NPN base inputs for reduced loading (20μA in LOW and HIGH states)**

TYPE	TYPICAL PROPAGATION DELAY	TYPICAL SUPPLY CURRENT
74F280A	9.0 ns	26 mA

ORDERING CODE

PACKAGES	COMMERCIAL RANGES V_{CC} = 5V ± 5%; T_A = 0°C to +70°C	MILITARY RANGES V_{CC} = 5V ± 10%; T_A = −55°C to +125°C
Plastic DIP	N74F280AN	
Ceramic DIP		S54F280AW
Flatpack		S54F280AF

DESCRIPTION

The 'F280A is a 9-bit parity generator or checker commonly used to detect errors in high-speed data transmission or data retrieval systems. Both Even and Odd parity outputs are available for generating or checking even or odd parity on up to 9 bits.

The Even parity output (Σ_E) is HIGH when an even number of Data inputs (I_0-I_8) are HIGH. The Odd parity output (Σ_O) is HIGH when an odd number of data inputs are HIGH.

Expansion to larger word sizes is accomplished by tying the Even outputs (Σ_E) of up to nine parallel devices to the Data inputs of the final stage. This expansion scheme allows an 81-bit data word to be checked in less than 25 ns with the 'F280A.

INPUT AND OUTPUT LOADING AND FAN-OUT TABLE

PINS	DESCRIPTION	54F/74F(U.L.) HIGH/LOW	LOAD VALUE HIGH/LOW
I_0-I_8	Data inputs	1.0/.033	20 μA/20 μA
Σ_E, Σ_O	Parity outputs	50/33	1.0 mA/20 mA

NOTE
ONE (1.0) FAST Unit Load is defined as: 20 μA in the HIGH state and 0.6 mA in the LOW state.

PIN CONFIGURATION

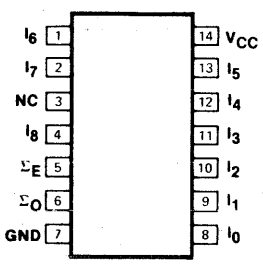

LOGIC SYMBOL

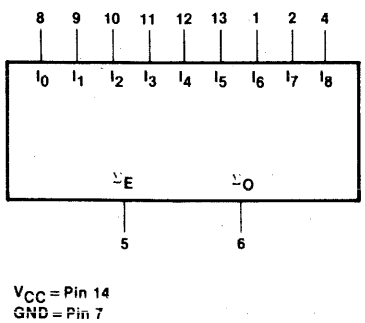

LOGIC SYMBOL (IEEE/IEC)

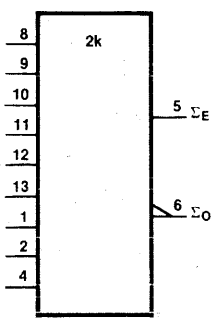

© IC MASTER 1984

Preliminary

'F365, 'F367 Hex Buffer/Driver (3-State)
'F366, 'F368 Hex Inverter Buffer (3-State)

FEATURES

- High impedance NPN base inputs for reduced loading (20μA in LOW and HIGH states)
- 3-State buffer outputs sink 64mA
- High speed
- Bus oriented

TYPE	TYPICAL PROPAGATION DELAY	TYPICAL SUPPLY CURRENT (Total)
74F365	ns	mA
74F366	ns	mA
74F367	ns	mA
74F368	ns	mA

ORDERING CODE

PACKAGES	COMMERCIAL RANGES V_{CC} = 5V ± 5%; T_A = 0°C to +70°C	MILITARY RANGES V_{CC} = 5V ± 10%; T_A = −55°C to +125°C
Plastic DIP	N74F365AN N74F366AN N74F367AN N74F368AN	
Ceramic DIP		S54F365AF S54F366AF S54F367AF S54F368AF
Flatpack		S54F365AW S54F366AW S54F367AW S54F368AW

FUNCTION TABLE, 'F365, 'F366

INPUTS			OUTPUTS	
$\overline{OE}_1$	$\overline{OE}_2$	I	Y	$\overline{Y}$
L	L	L	L	H
L	L	H	H	L
X	H	X	(Z)	(Z)
H	X	X	(Z)	(Z)

FUNCTION TABLE, 'F367, 'F368

INPUTS		OUTPUTS	
$\overline{OE}$	I	Y	$\overline{Y}$
L	L	L	H
L	H	H	L
H	X	(Z)	(Z)

L = LOW voltage level
H = HIGH voltage level
X = Don't care
(Z) = HIGH impedance (off) state

INPUT AND OUTPUT LOADING AND FAN-OUT TABLE

PINS	DESCRIPTION	54/74F (U.L.) HIGH/LOW	LOAD VALUE HIGH/LOW
$\overline{OE}_1$, $\overline{OE}_2$	3-State Output, Enable Input (Active LOW)	/	/
	Inputs	/	/
	Outputs	/	/

NOTE
One (1.0) FAST unit load is defined as: 20μA in the HIGH state and 0.6mA in the LOW state.

PIN CONFIGURATION

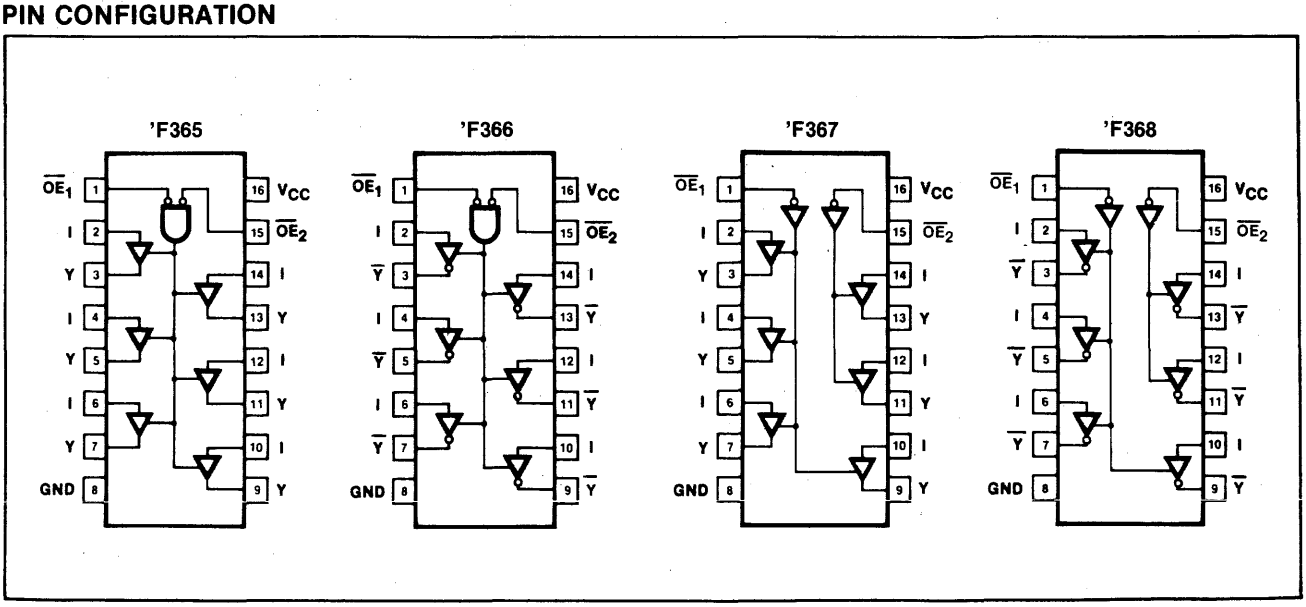

'F373 Octal Transparent Latch With 3-State Outputs
'F374 Octal D Flip-Flop With 3-State Outputs

- **8-bit transparent latch — 'F373**
- **8-bit positive, edge-triggered register — 'F374**
- **3-State output buffers**
- **Common 3-State Output Enable**
- **Independent register and 3-State buffer operation**

TYPE	TYPICAL PROPAGATION DELAY	TYPICAL SUPPLY CURRENT (Total)
74F373	4.5ns	35mA
74F374	6.5ns	55mA

ORDERING CODE

PACKAGES	COMMERCIAL RANGES V_{CC} = 5V ±5%; T_A = 0°C to +70°C	MILITARY RANGES V_{CC} = 5V ±10%; T_A = −55°C to +125°C
Plastic DIP	N74F373N • N74F374N	
Ceramic DIP	N74F373F • N74F374F	S54F373F • S54F374F
Flatpack		S54F373W • S54F374W

INPUT AND OUTPUT LOADING AND FAN-OUT TABLE

PINS	DESCRIPTION	54F/74F (U.L.) HIGH/LOW	LOAD VALUE HIGH/LOW
All	Inputs	1.0/1.0	20μA/0.6mA
Q_0-Q_7	Outputs	50/33	1.0mA/20mA

NOTE
One (1.0) FAST unit load is defined as: 20μA in the HIGH state and 0.6mA in the LOW state.

DESCRIPTION

The 'F373 is an octal transparent latch coupled to eight 3-State output buffers. The two sections of the device are controlled independently by Enable (E) and Output Enable ($\overline{OE}$) control gates.

The data on the D inputs are transferred to the latch outputs when the Latch Enable (E) input is HIGH. The latch remains transparent to the data inputs while E is HIGH, and stores the data that is present one set-up time before the HIGH-to-LOW enable transition.

The 3-State output buffers are designed to drive heavily loaded 3-State buses, MOS memories, or MOS microprocessors. The active LOW Output Enable ($\overline{OE}$) controls all eight 3-State buffers independent of the latch operation. When $\overline{OE}$ is LOW, the latched or transparent data appears at the outputs. When $\overline{OE}$ is HIGH, the outputs are in the HIGH impedance "off" state, which means they will neither drive nor load the bus.

The 'F374 is an 8-bit, edge-triggered register coupled to eight 3-State output buffers. The two sections of the device are controlled independently by the Clock (CP) and Output Enable ($\overline{OE}$) control gates.

The register is fully edge triggered. The state of each D input, one setup time before the LOW-to-HIGH clock transition, is transferred to the corresponding flip-flop's Q output.

PIN CONFIGURATION

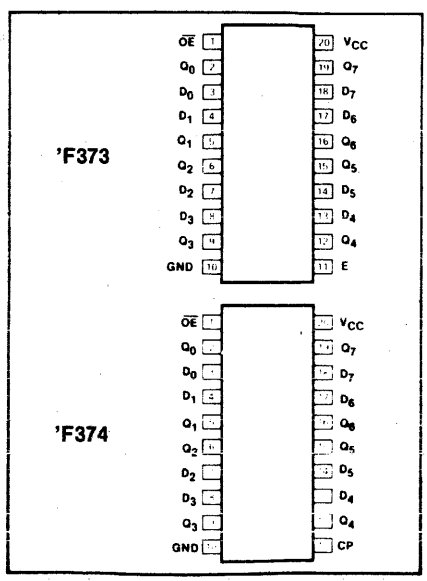

LOGIC SYMBOL

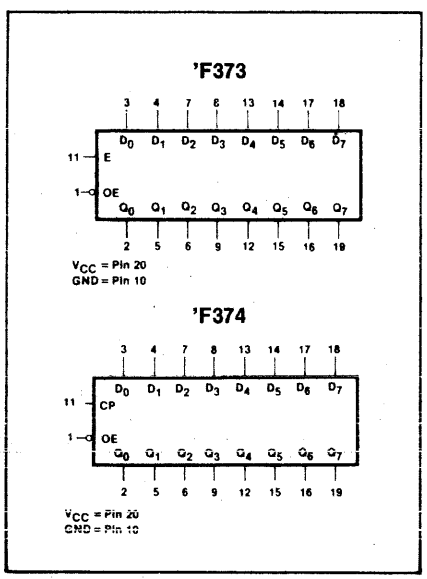

LOGIC SYMBOL (IEEE/IEC)

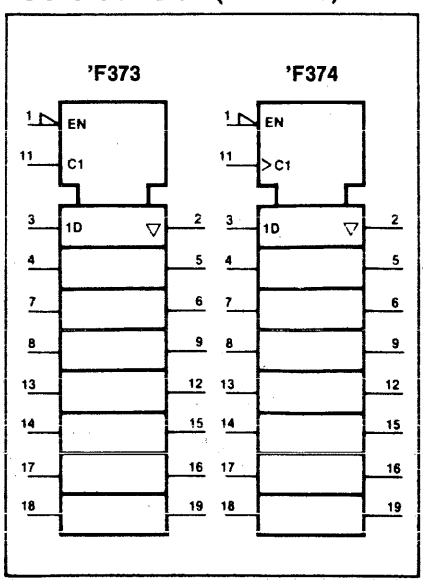

© IC MASTER 1984

Preliminary

F604 — Dual Octal Register (with 3-State Outputs)
F605 — Dual Octal Register (with Open-Collector Outputs)

- **High Impedance NPN Base Inputs for Reduced Loading (20μA in HIGH and LOW States**
- **Stores 16-Bit Wide Data Inputs Multiplexed 8-Bit Outputs**
- **3-State Outputs ('F604)**
- **Open-Collector Outputs ('F605)**
- **Propagation Delay 10ns Typ;**
- **Power Supply Current 140mA Typ**

TYPE	TYPICAL F_{MAX}	TYPICAL SUPPLY CURRENT (Total)
74F604		
74F605		

ORDERING CODE

PACKAGES	COMMERCIAL RANGES V_{CC} = 5V ± 5%; T_A = 0°C to +70°C	MILITARY RANGES V_{CC} = 5V ± 10%; T_A = −55°C to +125°C
Plastic DIP	N74F604N, N74F605N	
Ceramic DIP		S54F604F, S54605F
Flatpack		S54F604W, S54F605W

INPUT AND OUTPUT LOADING AND FAN-OUT TABLE

PINS	DESCRIPTION	54F/74F (U.L.) High/Low	LOAD VALUE High/Low
A_1-A_8	Inputs A		
B_1-B_8	Inputs B		
Select A/$\overline{B}$	Select Inputs		
Y_1-Y_8	Outputs		

NOTE:
One (1.0) FAST unit load is defined as: 20μA in the HIGH state and 0.6mA in the LOW state.

DESCRIPTION

The 'F604 contains 16 D-type edge-triggered data inputs. Organized as 8-bit A and B registers, the flip-flop outputs are connected by pairs to eight 2-input multiplexers. A Select (SA/$\overline{B}$) input determines whether the A or B register contents are multiplexed to the eight

PIN CONFIGURATION

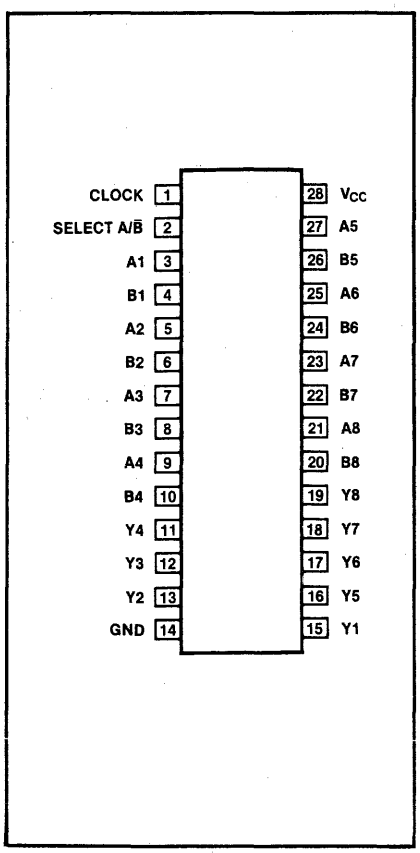

LOGIC SYMBOL

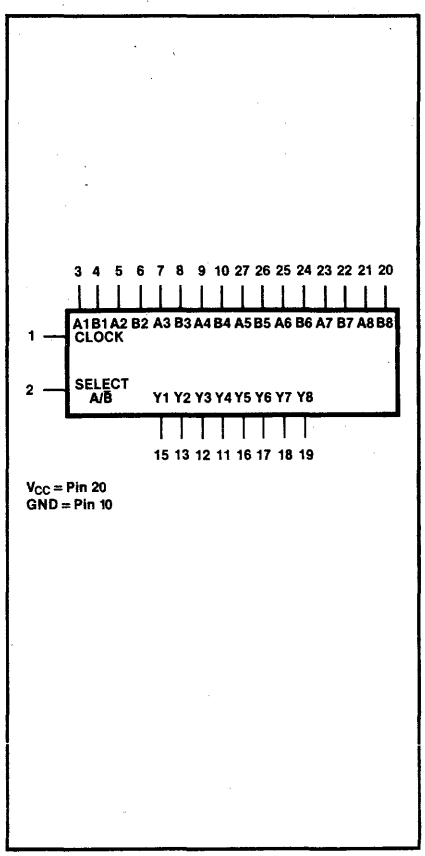

LOGIC SYMBOL (IEEE/IEC)

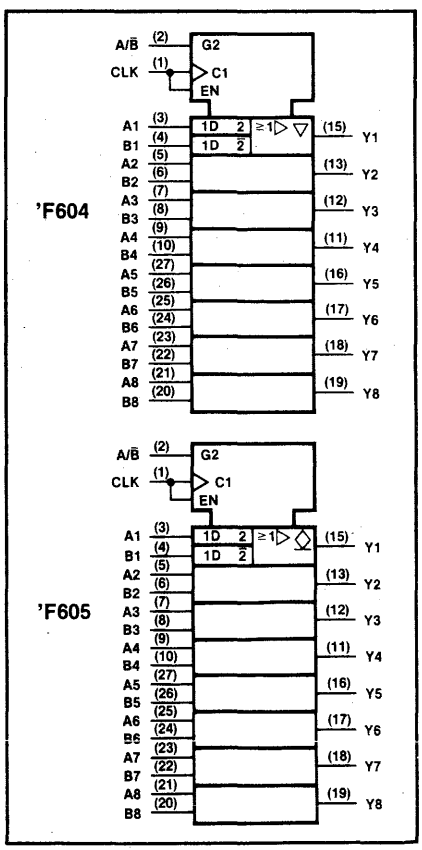

DIGITAL

Signetics

© IC MASTER 1984

'F630 — 16-Bit Parallel Error Detection and Correction Circuit (3-State)
'F631 — 16-Bit Parallel Error Detection and Correction Circuit (Open-Collector)

- **Detects and corrects single-bit errors**
- **Detects and flags dual-bit errors**
- **Fast processing times:**
  - **Write cycle: Generates check word in 20ns typical**
  - **Read cycle: Flags errors in 25ns typical**
- **Power dissipation 120mW typical**
- **Choice of output configurations**
  - **'F630: 3-State**
  - **'F631: Open-Collector**

TYPE	TYPICAL PROPAGATION DELAY	TYPICAL SUPPLY CURRENT (Total)
74F630	17ns	120mA
74F631	17ns	120mA

ORDERING CODE

PACKAGES	COMMERCIAL RANGES $V_{CC}=5V\pm5\%$; $T_A=0°C$ to $+70°C$	MILITARY RANGES $V_{CC}=5V\pm10\%$; T_A $-55°C$ to $+125°C$
Plastic DIP	N74F630N • N74F631N	
Ceramic DIP		S54F630F • S54F631F
Ceramic LLCC		S54F630G • S54F631G

INPUT AND OUTPUT LOADING AND FAN-OUT TABLE

PINS	DESCRIPTION	54F/74F (U.L.) High/Low	LOAD VALUE High/Low
DB_0–DB_{15}	Data Bits	1.0/1.0	20μA/0.6mA
CB_0–CB_5	Check Bits	1.0/1.0	20μA/0.6mA
S_0, S_1	Control	1.0/1.0	20μA/0.6mA
SEF, DEF	Error Flags	1.0/1.0	20μA/0.6mA

NOTE
One (1.0) FAST unit load is defined as: 20μA in the HIGH state and 0.6mA in the LOW state.

DESCRIPTION

The 'F630 and 'F631 devices are 16-bit parallel error detection and correction circuits (EDACs) in 28-pin, 600-mil packages. They use a modified Hamming code to generate a 6-bit check word from a 16-bit data word. This check word is stored along with the data word during the memory write cycle. During the memory read cycle, the 22-bit words from memory are processed by the EDACs to determine if errors have occurred in memory.

Single-bit errors in the 16-bit data word are flagged and corrected.

Single-bit errors in the 6-bit check word are flagged, and the CPU sends the EDAC through the correction cycle even though the 16-bit word is not in error. The correction cycle will simply pass along the original 16-bit word in this case and produce error syndrome bits to pinpoint the error-generating location.

Dual-bit errors are flagged but not corrected. These dual errors may occur in any 2 bits of the 22-bit word from memory (two errors in the 16-bit data word, two errors in the 6-bit check word, or one error in each word).

The gross-error condition of all lows or all highs from memory will be detected. Otherwise, errors in three or more bits of the 22-bit word are beyond the capabilities of these devices to detect.

PIN CONFIGURATION

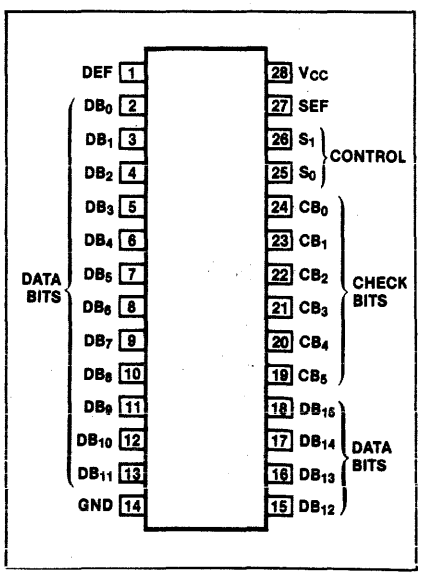

© IC MASTER 1984

'F646 — Octal Transceiver/Register with 3-State Outputs, Non-Inverting
'F647 — Octal Transceiver/Register with Open-Collector Outputs, Non-Inverting
'F648 — Octal Transceiver/Register with 3-State Outputs, Inverting
'F649 — Octal Transceiver/Register with Open-Collector Outputs, Inverting

- **High impedance NPN base inputs for reduced loaders (20μA in HIGH and LOW states)**
- **Independent registers for A and B buses**
- **Multiplexed real-time and stored data**
- **Choice of true and inverting data paths**
- **Choice of 3-state or open-collector outputs**

TYPE	TYPICAL PROPAGATION DELAY	TYPICAL SUPPLY CURRENT (Total)
74F646		
74F647		
74F648		
74F649		

ORDERING CODE

PACKAGES	COMMERCIAL RANGES V_{CC} = 5V ±5%; T_A = 0°C to +70°C	MILITARY RANGES V_{CC} = 5V ±10%; T_A = −55°C to +125°C
Plastic DIP	N74F646N • N74F647N N74F648N • N74F649N	
Ceramic DIP		S54F646F • S54F647F S54F648F • S54F649F
Flatpack		S54F646W • S54F647W S54F648W • S54F649W

DESCRIPTION

These devices consist of bus transceiver circuits with 3-state or open-collector outputs, D-type flip-flops, and control circuitry arranged for multiplexed transmission of data directly from the input bus or from the internal registers. Data on the A or B bus will be clocked into the registers as the appropriate clock pin goes to a high logic level. Control G and direction pins are provided to control the transceiver function. In the transceiver mode, data present at the high impedance port may be stored in either the A or the B register or in both. The select controls can multiplex stored and real-time (transparent mode) data. The direction control determines which bus will receive data when the enable control $\overline{G}$ is active (low). In the isolation mode (control $\overline{G}$ high), A data may be stored in the B register and/or B data may be stored in the A register.

INPUT AND OUTPUT LOADING AND FAN-OUT TABLE

PINS	DESCRIPTION	54F/74F (U.L.) High/Low	LOAD VALUE High/Low
A1–A8	Data register A		
B1–B8	Data register B		
CK AB CK BA	Clock pulse inputs		
SEL.AB SEL.BA	Transmit/Receive inputs		
ENA.GAB ENA.$\overline{G}$BA	Output enable inputs		

NOTE
One (1.0) FAST unit load is defined as: 20μA in the HIGH state and 0.6mA in the LOW state.

PIN CONFIGURATION

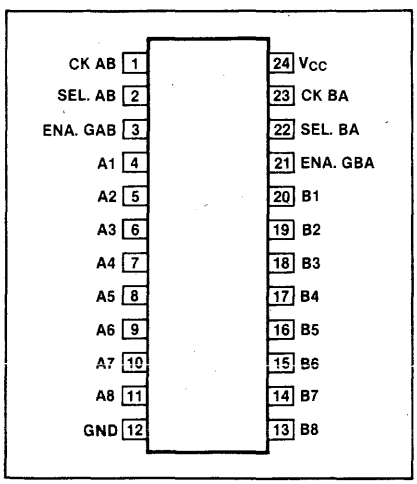

LOGIC SYMBOL

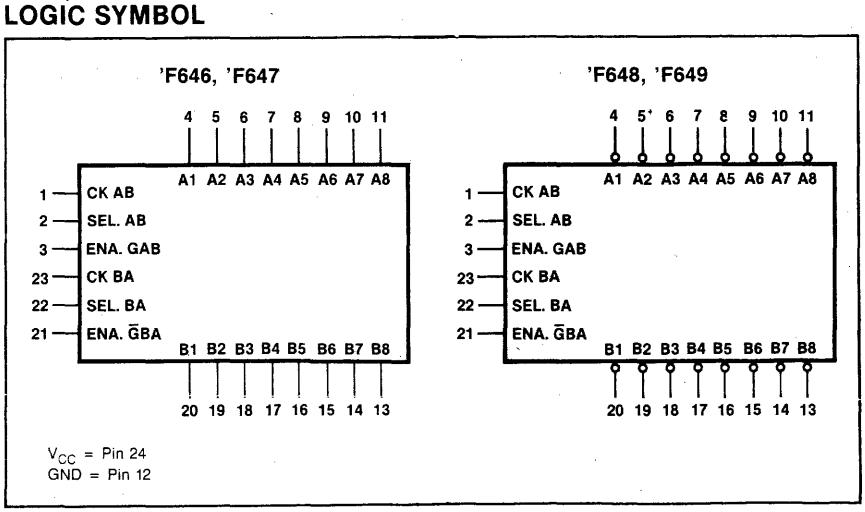

Octal Buffer/Line Driver with Parity (with 3-State Outputs)

- Inverting ('F655) or Non-inverting ('F656) outputs
- 24-pin plastic slim dip (300 mil) package
- 'F655 combines 'F240 and 'F280A functions
- 'F656 combines 'F241 and 'F280A functions
- Inputs on one side and outputs on the other side simplify PC board layout
- 3-State outputs
- Outputs sink 64mA
- 15mA source current
- High impedance NPN base input for reduced loading (20μA in HIGH and LOW states)

TYPE	TYPICAL PROPAGATION DELAY	TYPICAL SUPPLY CURRENT (Total)
74F655	8ns	83mA
74F656	8ns	83mA

ORDERING CODE

PACKAGES	COMMERCIAL RANGES V_{CC} = 5V ± 5%; T_A = 0°C to +70°C	MILITARY RANGES V_{CC} = 5V ± 10%; T_A −55°C to +125°C
Plastic DIP	N74F655N • N74F656N	
Ceramic DIP		S54F655F • S54F656F
Ceramic LLCC		S54F655G • S54F656G

INPUT AND OUTPUT LOADING AND FAN-OUT TABLE

PINS	DESCRIPTION	54F/74F (U.L.) High/Low	LOAD VALUE High/Low
$\overline{OE}_1$, $\overline{OE}_2$	3-State Output Enable Input (Active LOW)	1.0/0.033	20μA/20μA
OE_2	3-State Output Enable Input (Active HIGH)	1.0/0.033	20μA/20μA
	Inputs	1.0/0.033	20μA/20μA
	Inputs	1.0/0.033	20μA/20μA
	Outputs	50/33	1mA/20mA

NOTE
One (1.0) FAST unit load is defined as: 20μA in the HIGH state and 0.6mA in the LOW state.

DESCRIPTION

The 'F655 and 'F656 are octal buffers and line drivers with parity generation/checking designed to be employed as memory address drivers, clock drivers and bus-oriented transmitters/receivers. These parts include parity generator/checker to improve PC board density.

PIN CONFIGURATION

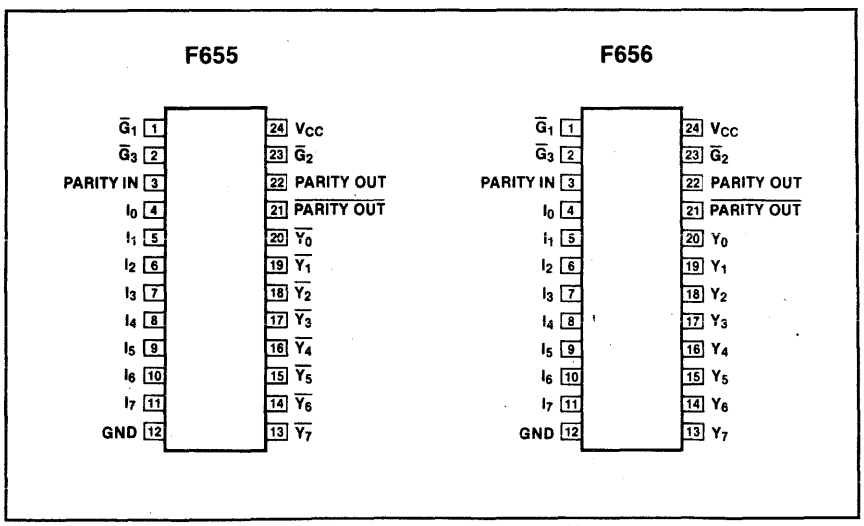

© IC MASTER 1984

Testing and Specifying FAST Logic

App Note 202

INTRODUCTION

FAST[1] Advanced Schottky TTL is a second generation Schottky logic family that utilizes advanced oxide-isolation techniques to increase the speed and decrease the power dissipation beyond the levels achievable with conventional junction-isolated families. The improved performance of the family is exhibited in two ways — first, the speed and power characteristics of the devices are improved, and second, the conditions under which speed and power are specified are much tighter. For instance, LS and S TTL families offer AC limits only at a nominal +5.00V V_{CC} supply voltage and at room temperature, 25° C. By contrast, FAST guarantees improved AC performance and specifies that performance over a supply variation of +5.00V ±5% and at temperatures from 0° to 70° C. Thus the designer no longer needs to derate his propagation delays from the data sheet limits to compensate for speed degradation over the temperature range.

With every advance of this magnitude, there arise new considerations that must be kept in mind both by the system designer and the user setting up test procedures. FAST is no exception, and it is these considerations that will be addressed in this application note. This paper represents an attempt to describe the way the FAST logic parts are specified, why they are spec'd in the way they are, and how the parts may be tested in the qualification lab and at incoming inspection to verify their performance.

THE FAST DATA SHEET PHILOSOPHY

Signetics FAST data sheets have been configured with an eye to quick useability . . . they are self contained and should require no reference to other sections for information. The typical propagation delays listed at the top of the page are the average between t_{PLH} and t_{PHL} for the most significant data path through the part. In the case of clocked products, this is sometimes the max frequency of operation, but in any event this number is a 5.00V - 25° C typical specification. The ICC typical current shown in that same specification block is the average current (in the case of a gate, this will be the average of the I_{CCH} and I_{CCL} currents) at room temperature and V_{CC} = 5.00V. It represents the total current through the package, not the current through individual functions.

Other considerations are the FANOUT AND LOADING TABLES. Some manufacturers relate these numbers in terms of 7400 gate loads . . . Signetics feels that FAST is unlikely to be mixed with other logic families and so gives the loading factors in terms of FAST unit loads. A FAST unit load is defined to be 0.6 mA in the LOW state and 20 μA in the HIGH state. Thus in the case of the 74F00 gate, the inputs are specified as 1 Ful (FAST unit load) each . . . the outputs need a little explanation. The standard FAST output is specified with an I_{OL} sink current of 20 mA and an I_{OH} of -1.0 mA. Thus the fanout of this gate in the LOW state is 20 mA/0.6 mA or 33 FAST unit loads. In the HIGH state the fanout is 1 mA/20 μA or 50 FAST unit loads. In each case, the Fanout and Loading Table on the Signetics data sheets states the HIGH/LOW fanout numbers . . . thus the 74F00 output fanout is specified as 50/33 Ful.

ABSOLUTE MAXIMUM RATINGS

The ABSOLUTE MAXIMUM RATINGS TABLE carries the maximum limits to which the part can be subjected without damaging it . . . there is no implication that the part will function at these extreme conditions. Thus, specifications such as the most negative voltage that may be applied to the outputs only guarantees that if less than -0.5V is applied to the output pin, after that voltage is removed the part will still be functional and its useful life will not have been shortened — it is difficult to imagine the meaning of the term "functionality" WHILE that voltage is applied to the output.

Input voltage and output voltage specs in this table reflect the device breakdown voltages in the positive direction (+7.0V) and the effect of the clamping diodes in the negative direction (-0.5V).

RECOMMENDED OPERATING CONDITIONS

The RECOMMENDED OPERATING CONDITIONS TABLE has a dual-purpose. In one sense, it sets some environmental conditions (operating free-air temperature), and in another, it sets the conditions under which the limits set forth in the DC ELECTRICAL CHARACTERISTICS TABLE and AC ELECTRICAL CHARACTERISTICS TABLE will be met. Another way of looking at this table is to think of it, not as a set of limits guaranteed by Signetics, but as the conditions Signetics uses to test the parts and guarantee that they will then meet the limits set forth in the DC and AC ELECTRICAL CHARACTERISTICS TABLES.

Some care must be used in interpreting the numbers in this table. Signetics feels strongly that the specifications set forth in a data sheet should reflect as accurately as possible the operation of the part in an actual system. In particular, the input threshold values of V_{IH} and V_{IL} can be tested by the user with parametric test equipment . . . if V_{IH} and V_{IL} are applied to the inputs, the outputs will be at the voltages guaranteed by the DC Electrical Characteristics Table. There is a tendency on the part of some users to use V_{IH} and V_{IL} as conditions applied to the inputs to test the part for functionality in a "truth-table exerciser" mode. This frequently causes problems because of the noise present at the test head of automated test equipment. Parametric tests, such as those used for the output levels under the V_{IH} and V_{IL} conditions are done fairly slowly, on the order of milliseconds, and any noise present at the inputs has settled out before the outputs are measured. But in functionality testing, the outputs are examined much faster, before the noise on the inputs has settled out and the part has assumed its final and correct output state. Thus V_{IH} and V_{IL} should never be used in testing the functionality of any TTL part including FAST. For these types of tests input voltages of +4.5V and 0.0V should be used for the HIGH and LOW states respectively.

In no way does this imply that the devices are noise sensitive in the final system. The use of "hard" HIGHs and LOWs during functional testing is done primarily to reduce the effects of the large amounts of noise typically present at the test heads of automated test equipment with cables that may at times reach several feet. The situation in a system on a PC board is less severe than in a noisy production environment.

DC ELECTRICAL CHARACTERISTICS

This table reflects the DC limits used by Signetics during its testing operations and conducted under the conditions set forth under the RECOMMENDED

[1] FAST is a trademark of Fairchild Camera and Instrument Corporation.

© IC MASTER 1984

OPERATING CONDITIONS TABLE. V_{OH}, for example, is guaranteed to be no less than 2.7V when tested with V_{CC} = +4.75V, V_{IH} = 2.0V, V_{IL} = 0.8V, across the temperature range from 0° to 70° C, and with an output current of I_{OH} = -1.0 mA. In this table, one sees the heritage of the original junction-isolated Schottky family . . . V_{OL} = 0.5V at I_{OL} = 20 mA. This gives the user a guaranteed worst-case LOW state noise immunity of 0.3V. In the HIGH state the noise immunity is 0.7V worst case. Although at first glance it would seem one-sided to have greater noise immunity in the HIGH state than in the LOW, this is a useful state of affairs. Because the impedance of an output in the HIGH state is generally much higher than in the LOW state, more noise immunity in the HIGH state is needed. This is because the noise source couples noise onto the output connection of the device — that output tries to pull the noise source down by sinking the energy to ground or to V_{CC} depending on the state. The ability of the output to do that is determined by its output impedance. The lower half of the output stage is a very low impedance transistor which can effectively pull the noise source down. Because of the higher impedance of the upper stage of the output, it is not as effective in shunting the noise energy to V_{CC}, so that an extra 0.4V of noise immunity in the HIGH state compensates for the higher impedance. The result is a nice balance of sink and drive current capabilities with the optimum amount of noise immunity in both states.

I_I, the maximum input current at maximum input voltage, is a measure of the input leakage current at the guaranteed minimum input breakdown voltage of 7.0V. Although some users consider this to be a test of the input breakdown itself, that voltage is typically over 15V. At room temperature, this leakage current should be less than 10 μA.

Short-Circuit Output Current is a parameter that has appeared on digital data sheets since the inception of integrated circuit logic devices, but the meaning and implications of that spec have totally changed. Originally I_{OS} was an attempt to reassure the user that if a stray oscilloscope probe accidentally shorted an output to ground the device would not be damaged. In this manner, an extremely long time was associated with the I_{OS} test. However, thermally induced malfunctions could occur after several seconds of sustained test. Over a period of time, I_{OS} became a measure of the ability of an output to charge line capacitance. Assume a device is driving a long line and is in the LOW state. When the output is switched HIGH, the rise time of the output waveform is limited by the rate at which the line capacitance can be charged to its new state of V_{OH}. At the instant that the output switches, the line capacitance looks like a short to ground. I_{OS} is the current demanded by the capacitive load as the voltage begins to rise and the demand decreases. We now reach the critical point in our discussion. The full value of I_{OS} need only be supplied for a few hundred microseconds at most, even with 1.0 μFd of line capacitance tied to the output, a load that is unrealistically high by several orders of magnitude.

The effect of a large I_{OS} surge through the relatively small transistors that make up the upper part of the output stage is not serious, AS LONG AS THAT CURRENT IS LIMITED TO A SHORT DURATION. If the hard short is allowed to remain, the full I_{OS} current will flow through that output state and may cause functional failure or damage to the structure. A test induced failure may occur if the I_{OS} test time is excessive. As long as the I_{OS} condition is very brief, typically 50 ms or less with ATE equipment, the local heating does not reach the point where damage or functional failures might occur. As we have already seen, this is considerably longer than the time of the effective current surge that must be supplied by the device in the case of charging line capacitance. The Signetics data sheet limits for I_{OS} reflect the conditions that the part will see in the system — full I_{OS} spikes for extremely short periods of time. Problems could occur if slow test equipment or test methods ground an output for too long a time causing functional failure or damage.

AC TESTING

FAST data sheets carry several types of AC information. The AC CHARACTERISTICS TABLE contains the guaranteed limits when tested under the conditions set forth under the AC TEST CIRCUITS AND WAVEFORMS. In some cases, the test conditions are further defined by the AC SETUP CONDITIONS — this is generally the case with counters and flip-flops where setup and hold times are involved. All of the AC Characteristics are guaranteed with 50 pF load capacitances. One of the sets of limits is spec'd at 25° C and +5.00V V_{CC} — these relate closely to the standard Schottky specs which are under similar conditions but use only 15 pF load capacitances. While these numbers are convenient for comparing the two families, keep in mind that using full 50 pF loads with the Schottky devices would add several nanoseconds to their propagation delays. These numbers are ideal for checking out test jigs and correlating data since they do not involve temperature or supply voltage spreads. For system design, full specifications are included that include temperature and supply voltage variations — in one case the military ranges and in the other, the commercial ranges.

AC TEST JIGS AND SETUPS

Each FAST data sheet spells out the test circuit used to check AC performance, the waveforms, meaurement points, rep rate, test loads, etc. But these are only the quantifiable variables involved in this testing. There is another more complex side to the issue — test jigs and equipment setups.

To get an appreciation for the problems involved in testing FAST, consider these facts. The output rise and fall times on FAST outputs are very sharp. Translating these edge rates into the effective sine wave equivalents generates frequencies on the order of several hundred MHz. At these frequencies, attention to RF phenomena is required.

Because of these RF frequencies, it is necessary to have an AC test jig that has minimal modifying effect on the input and output waveforms. To do this the jig must be constructed properly. The following items are key in dealing with AC jig construction.

DECOUPLING CAPACITORS

Signetics uses high quality capacitors that have good RF qualities to decouple the power supply lines on the test jig, right at the V_{CC} pin to the ground plane. Three capacitors with absolute minimum lead length are used. These are one each, 1 μFd dipped tantalum, 0.1 μFd dipped tantalum or ceramic, and .002 μFd ceramic.

GROUNDING

One of the biggest contributors to waveform degradation is improper grounding. In reference to the test jig,

© IC MASTER 1984

the grounding is best done with a large ground plane that is directly connected to the ground pin of the test socket. The Signetics AC test jig is constructed out of solid copper and provides an excellent ground to the pin and prevents ground loops, which are problems on most jigs constructed out of PC board material. The metal surface of the Signetics jig also provides a very low inductance, low resistance ground path. In this type of construction, the stray ground currents are negligible and the part is provided with a very "clean" environment.

WIRING

The next concern is getting the input signal to the part and the output signal to the measurement system. The main requirement at this point is to keep the wires to the socket as short as possible, thereby reducing inductance and reflections. At the same time the wires should be close to the ground plane to maintain a somewhat constant impedance over the entire length. Wire should be 18 gauge to minimize inductance and to facilitate jig construction. The length of wire on each pin should be identical to provide uniform jig delay.

JIG DELAY

One factor that must be considered when taking measurements on the jig is the delay introduced by the jig itself. This delay will now be described. The stimulus (generator) is monitored by a probe at the point where the signal enters the jig. At the time the signal enters the jig, the signal is also traveling up the probe. It takes a finite amount of time to travel from the connector of the jig to the pin of the device. That time cannot be considered in the propagation delay of the device and must therefore be subtracted. For reference, this time is known as t_{in} delay. This time, t_{in} delay, has also elapsed for the probe, so the measurement system sees this signal, t_{in} delay, before the part does. On the output, a similar situation occurs. The probe on the connector of the jig sees the signal from the output only after it has traveled from the pin to the jig connector. This is known as t_{out} delay. Because the measurement system sees this signal after the t_{out} delay, this too must be subtracted. Consequently, if both delay times are summed, a jig delay factor can be obtained. The jig delay times are not insignificant when compared to extremely low propagation delays obtainable with FAST. Signetics jigs demonstrate typical jig delay times on the order of 0.5–0.75ns, which cannot be ignored. The exact jig delay time is determined by the size of the universal jig that is being used. It is also important to know that the frequency response of the jig must be high to prevent the delay factor from varying with the edge rates. The frequency response of the jig indicates how constant the impedance remains over frequency. The characteristic impedance of a transmission line is expressed as . . .

$$Z_O = \frac{V}{I} = \sqrt{\frac{L_O}{C_O}}$$

where L_O is the inductance per unit length, C_O is the capacitance per unit length, Z_O is in Ohms, L_O in Henrys, and C_O in Farads. Propagation velocity and its inverse, delay per unit length δ, are also expressed in L_O and C_O ...

$$V = \frac{1}{\sqrt{L_O C_O}} \qquad \delta = \sqrt{L_O C_O}$$

where δ is expressed in nanoseconds, L_O is in microhenrys per unit length, and C_O in microfarads per unit length. From this, it is clear that if the Z_O changes over frequency, then the delay per unit length will vary as well. Therefore, it is imperative to know how the jig responds over frequency.

Frequency response also depends on the phase as well as the magnitude of the impedance. If the phase changes so does the delay, since delay is the derivative of phase change with frequency. An S-parameter analysis is needed in evaluating jig performance.

UNIVERSAL JIG CONSTRUCTION

Jig universality is with respect to chip pin count and as such, separate universal test jigs are built for 14, 16, 20, 24 and 28 pin parts.

Signetics FAST bench test jigs are fabricated from 3 inch metal caps. A Textool ZIF socket is mounted in the top center of the jig and connected to BNC connectors spaced equidistantly around the wall of the jig with 18 gauge wire. An S-parameter analysis was performed in a network analyzer to optimize the jig layout. This assured that the jig had a flat frequency response over the spectrum of interest for FAST product. See Figures 1, 2 and 3 for the jig and load response over frequency. The equipment used to analyze the jigs

TRANSFER CHARACTERISTICS OF THE LOAD OVER FREQUENCY

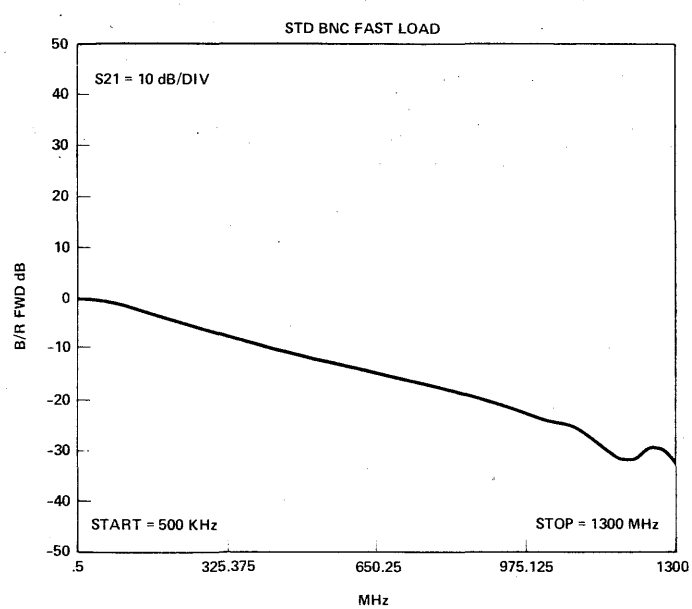

Figure 1.

and loads was: HP8505A Network Analyzer, HP8503A S-Parameter Test Set, HP8501A Storage Normalizer. In some measurements the equipment was driven by an HP9845B desk-top computer.

Jigs produced in this way should have minimal lead length to reduce the characteristic inductance. This in turn minimizes reflections with their accompanying waveform distortions and measurement inaccuracies.

AC TEST LOADS FOR THE SIGNETICS UNIVERSAL JIG

As stated previously, the Network Analyzer was also used to design and optimize AC test loads to be used with the universal jig. FAST product loads require 50 pF load capacitance and 500Ω resistance to ground.

Signetics meets the 50 pF requirement through the use of a 45 pF load, 4 pF jig capacitance, and 3 pF probe capacitance. The result, 52 pF, is slightly more stringent than required.

A few words about load capacitors are in order. All capacitors have an associated inductance. Due to this inductance, a capacitor will form a series resonant circuit at some frequency. For single 50 pF capacitors, this typically occurs between 200 and 600 MHz depending on the type of capacitor. Above this resonant frequency, the capacitor has inductive characteristics and does not present a capacitive load. This is very important with FAST because harmonics due to the sharp edge transition rates occur at 600 MHz and above.

The Signetics FAST loads solve this problem by reducing the load capacitor lead inductance by paralleling three 15 pF chip capacitors. The resulting load is 45 pF. At the same time, since smaller value caps are used to build up the capacitive load, the associated series resonant point is above 1.2 GHz.

The load resistors are 1/8 watt selected 510 ohm ±10 ohm resistors.

The entire load assembly is constructed inside two standard BNC connectors, the UG-88/u and the UG-1094/u. Slots are machined in the UG-1094/u connectors to allow placement and soldering of the three chip capacitors and the 510 ohm resistor. In the case of tri-state load, two 510 ohm resistors are used. Signetics uses BNC connectors with Teflon insulation. Teflon insulation facilitates load construction over other forms of hard plastic insulators found in some connectors. The second resistor is connected to a banana jack which is fastened to the load assembly. The load circuit is detailed on the FAST data sheets for tri-state parts.

CORRELATION

While numerous ATE systems are available, and are very efficient, it is imperative that the ATE correlate to a user's bench setup. Since the Signetics FAST parts are all characterized on the setup described in this note, it is just as important that the user bench jigs meet the same performance criteria. Without similar jigs, it will be very difficult to correlate AC data.

TRANSFER CHARACTERISTICS OVER FREQUENCY THROUGH THE 20-PIN UNIVERSAL TEST JIG

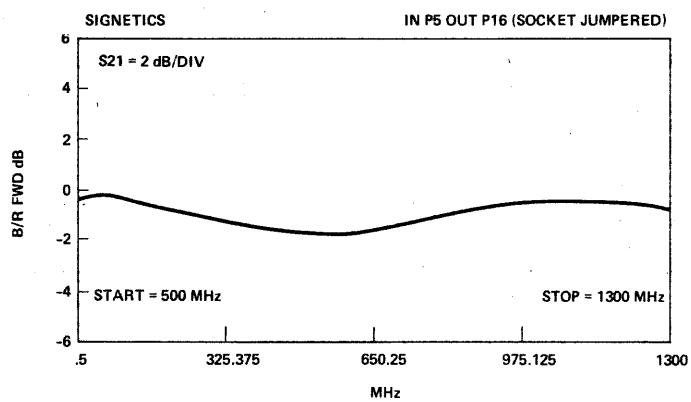

Figure 2.

PLOT SHOWING LINEAR PHASE CHARACTERISTICS OVER FREQUENCY OF THE 20-PIN UNIVERSAL TEST JIG

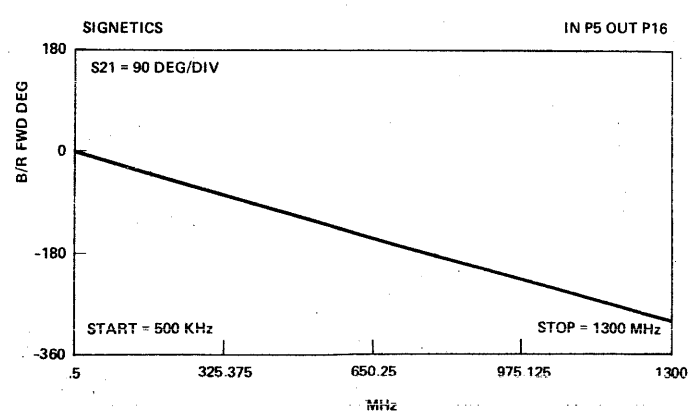

Figure 3.

© IC MASTER 1984

TWO-PART DYNAMIC RAM CONTROLLER 74LS764

DESCRIPTION

The 74LS764 Two-Port Dynamic RAM controller is a 40-pin, bipolar, memory controller designed to perform the functions of arbitrator, access signal controller, and refresher for interfacing industry standard Dynamic RAMs to at most two processors, known as 'users.' The number of address lines interfaceable to the controlled DRAMs (18) indicates that the 764 will control DRAMs of up to 256K in size, with the number of 256K banks of controlled DRAM limited by the output capability of the $\overline{RAS}$, $\overline{CASEN}$, and the MA0–8 address lines.

The CLK input determines the speed at which the controller will function, with a suggested limit of 50MHz. The RCLK input determines the period of refresh for each row after it is divided by 50 internally.

Access to the controlled DRAM is accomplished by bringing one of the two REQ inputs low. Initial arbitration indicates on the SEL outputs which user will be granted access next, after the current cycle (access or refresh) is completed. When the current cycle is completed, the GNT output is brought high to indicate that a memory access cycle is now commencing for the selected user. This GNT signal, when decoded with the proper SEL output, can be used as a wait signal for some popular microprocessors. Once the GNT signal has become true, the address inputs A1–A18 are latched internally, and A1–A9 are propagated to the MA0–8 outputs. 1/2 TCLK later, the $\overline{RAS}$ output becomes active, and at the next half-cycle of CLK, the address lines A10–A18 are selected and propagated to the MA0–8 outputs, and the WG output (WRITE GATE) becomes active, indicating the proper time for $\overline{WE}$ going to the DRAMs to become active for an 'EARLY WRITE' cycle. This WG signal, when used with the SEL signal, can be used to gate in the $\overline{WR}$ signal coming from the user to produce a proper $\overline{WE}$ signal for the DRAMs. After 1/2 TCLK allows the address to propagate and stabilize, the $\overline{CASEN}$ output becomes active, which can be used as a $\overline{CAS}$ output or decoded with higher order address lines to produce multiple $\overline{CAS}$ signals.

After the $\overline{CASEN}$ signal has become active, 3 CLK cycles occur before $\overline{RAS}$ is turned off, giving a total pulse width for $\overline{RAS}$ of 4 CLK cycles. At the same time, the DTACK output becomes active, indicating that data is valid on the DRAM data lines, or that proper access time has been reached, indicating to the user that it can now commence to withdraw its request. All signal lines are held in this state until the user finally brings its REQ input high, at which time, after synchronization, the GNT, SEL and other signal become inactive and a new access or refresh cycle is serviced.

The refresh cycle commences from internal requests generated from the RCLK divided by 50 to produce a refresh request every 12.5μsec when using a 4MHz RCLK. In this cycle the internal refresh counter addresses are allowed to propagate and settle on the MA0-8 address outputs, at which time the $\overline{RAS}$ signal becomes active for 4 CLK cycles, then inactive for 3 CLK cycles, to meet the precharge requirement of DRAMs. This refresh request takes priority over the two REQ inputs, except when one of them is in the process of being serviced when the refresh request comes active. In that case the refresh cycle would start immediately after the current user is serviced.

REQ contention is resolved by sampling the REQ inputs on different edges of the CLK, which resolves the problem of Requests coming simultaneously, but also introduces a delay of up to 1 TCLK for resolution.

The $\overline{RAS}$, $\overline{CASEN}$, and MA0–8 address line outputs have 48mA outputs and a 'slow ramp' feature to promote proper interfacing to standard DRAM inputs. The outputs are specified to handle up to 256pF without degradation of control and minimal degradation of access time. Indicating a limit of 32 devices connected to any one pin (8pF load per input).

FEATURES

- **Arbitration for 2 microprocessors, refresh, RAS/CAS generation, access ready timing and address multiplexing with a single 40-pin chip**
- **Nine address pins allow control of DRAMs up to 256K**
- **Convenient pinout and other support chips on the right**
- **Separate refresh clock allows adjustable refresh timing**

BLOCK DIAGRAM

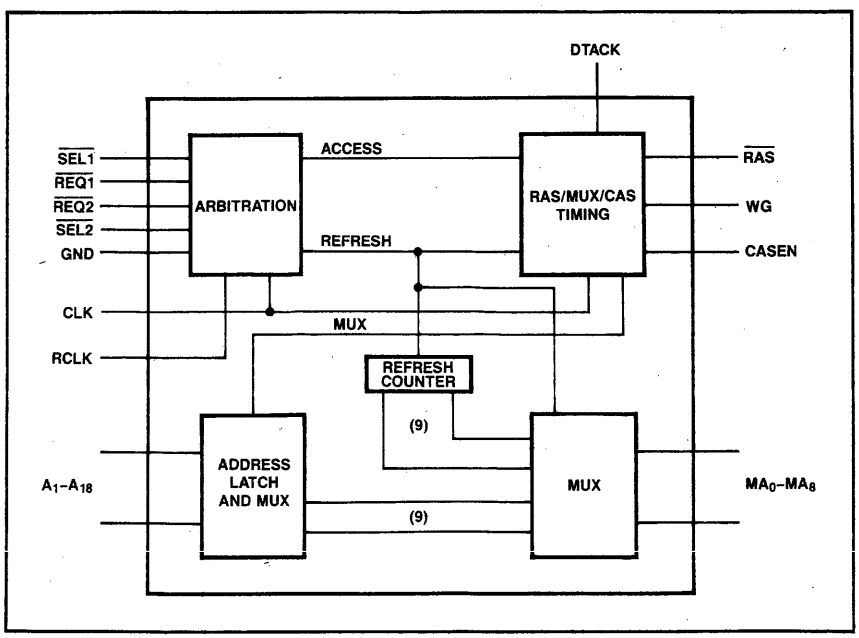

PIN CONFIGURATION

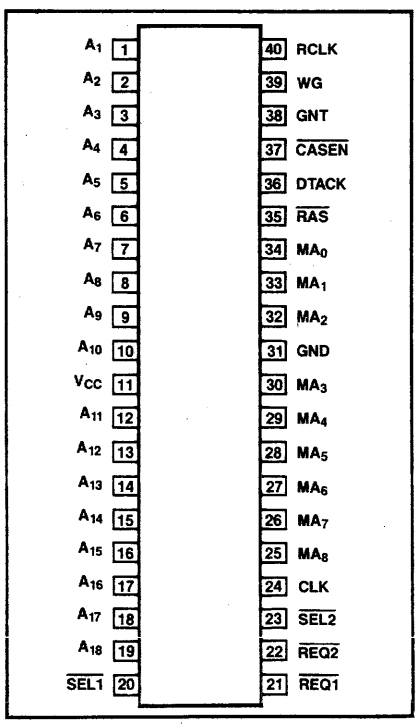

DIGITAL

Signetics

© IC MASTER 1984

CMOS 4000B FAMILY SPECIFICATIONS

ABSOLUTE MAXIMUM RATINGS

SYMBOL AND PARAMETER		RATING	UNIT
V_{DD}	Supply voltage	−0.5 to +18	V
V_I	Voltage on any input	−0.5 to V_{DD} +0.5V	V
±I	Current into any input or output	10	mA
T_{stg}	Storage temperature	−65 to +150	°C
T_{amb}	Operating ambient temperature	−40 to +85	°C

AC ELECTRICAL CHARACTERISTICS

Clock input rise and fall times (t_r, t_f)

The upper limits on t_r and t_f vary widely from device to device and with supply voltage. Unless otherwise specified in the individual data sheets it is recommended that input rise and fall times be less than 15 μs for V_{DD} = 5 V; 4 μs for V_{DD} = 10 V; 1 μs for V_{DD} = 15 V.

Output transition times (t_{TLH}, t_{THL})

V_{SS} = 0 V; T_{amb} = 25°C; C_L = 50 pF; input transition times ≤ 20 ns

SYMBOL AND PARAMETER		TEST CONDITION	Min	Typ	Max	UNIT
t_{THL}	Output transition time HIGH to LOW	V_{DD} = 5V, 10_{ns} + (1.0 ns/pF) C_L		60	120	ns
		V_{DD} = 10V, 9_{ns} + (0.42 ns/pF) C_L		30	60	
		V_{DD} = 15 V, 6_{ns} + (0.28 ns/pF) C_L		20	40	
t_{TLH}	Output transition time HIGH to LOW	V_{DD} = 5V, 10_{ns} + (1.0 ns/pF) C_L		60	120	ns
		V_{DD} = 10V, 9_{ns} + (0.42 ns/pF) C_L		30	60	
		V_{DD} = 15 V, 6_{ns} + (0.28 ns/pF) C_L		20	40	

Temperature coefficient (typical values)

Propagation delays	+0.35%/°C
Output transition times	+0.35%/°C

Input capacitance (digital inputs)
Maximum input capacitance C_I = 7.5 pF.

© IC MASTER 1984

CMOS 4000B FAMILY SPECIFICATIONS

DC ELECTRICAL CHARACTERISTICS V_{SS} = 0V; for all devices unless otherwise specified

SYMBOL AND PARAMETER			TEST CONDITIONS		T_{amb} (°C) −40 Min	−40 Max	+25 Min	+25 Max	+85 Min	+85 Max	UNIT
I_{DD}	Quiescent device current	Gates	$V_I = V_{SS}$ or V_{DD}, all valid input combinations	V_{DD} = 5V		1.0		1.0		7.5	μA
				V_{DD} = 10V		2.0		2.0		15.0	
				V_{DD} = 15V		4.0		4.0		30.0	
		Buffers and flip-flops	$V_I = V_{SS}$ or V_{DD}, all valid input combinations	V_{DD} = 5V		4.0		4.0		30	
				V_{DD} = 10V		8.0		8.0		60	
				V_{DD} = 15V		16.0		16.0		120	
		MSI	$V_I = V_{SS}$ or V_{DD}, all valid input combinations	V_{DD} = 5V		20		20		150	
				V_{DD} = 10V		40		40		300	
				V_{DD} = 15V		80		80		600	
		LSI	$V_I = V_{SS}$ or V_{DD}, all valid input combinations	V_{DD} = 5V		50		50		375	
				V_{DD} = 10V		100		100		750	
				V_{DD} = 15V		200		200		1500	
V_{OL}	LOW-level output voltage		$V_I = V_{SS}$ or V_{DD}, $\|I_O\| < 1\mu A$	V_{DD} = 5V		0.05		0.05		0.05	V
				V_{DD} = 10V		0.05		0.05		0.05	
				V_{DD} = 15V		0.05		0.05		0.05	
V_{OH}	HIGH-level output voltage		$V_I = V_{SS}$ or V_{DD}, $\|I_O\| < 1\mu A$	V_{DD} = 5V	4.95		4.95		4.95		V
				V_{DD} = 10V	9.95		9.95		9.95		
				V_{DD} = 15V	14.95		14.95		14.95		
V_{IL}	LOW-level input voltage (buffered stages only)		V_O = 0.5V or 4.5V, $\|I_O\| < 1\mu A$	V_{DD} = 5V		1.5		1.5		1.5	V
			V_O = 1.0V or 9.0V, $\|I_O\| < 1\mu A$	V_{DD} = 10V		3.0		3.0		3.0	
			V_O = 1.5 or 13.5V, $\|I_O\| < 1\mu A$	V_{DD} = 15V		4.0		4.0		4.0	
V_{IH}	HIGH-level input voltage (buffered stages only)		V_O = 0.5V or 4.5V, $\|I_O\| < 1\mu A$	V_{DD} = 5V	3.5		3.5		3.5		V
			V_O = 1.0V or 9.0V, $\|I_O\| < 1\mu A$	V_{DD} = 10V	7.0		7.0		7.0		
			V_O = 1.5 or 13.5V, $\|I_O\| < 1\mu A$	V_{DD} = 15V	11.0		11.0		11.0		
V_{IL}	LOW-level input voltage (unbuffered stages only)		V_O = 0.5V or 4.5V, $\|I_O\| < 1\mu A$	V_{DD} = 5V		1		1		1	V
			V_O = 1.0V or 9.0V, $\|I_O\| < 1\mu A$	V_{DD} = 10V		2		2		2	
			V_O = 1.5 or 13.5V, $\|I_O\| < 1\mu A$	V_{DD} = 15V		2.5		2.5		2.5	
V_{IH}	HIGH-level input voltage (unbuffered stages only)		V_O = 0.5V or 4.5V, $\|I_O\| < 1\mu A$	V_{DD} = 5V	4		4		4		V
			V_O = 1.0V or 9.0V, $\|I_O\| < 1\mu A$	V_{DD} = 10V	8		8		8		
			V_O = 1.5 or 13.5V, $\|I_O\| < 1\mu A$	V_{DD} = 15V	12.5		12.5		12.5		
I_{OL}	LOW-level output (sink) current		V_O = 0.4V, V_I = 0 or 5V	V_{DD} = 5V	0.52		0.44		0.36		mA
			V_O = 0.5V, V_I = 0 or 10V	V_{DD} = 10V	1.3		1.1		0.9		
			V_O = 1.5V, V_I = 0 or 15V	V_{DD} = 15V	3.6		3.0		2.4		
$-I_{OH}$	HIGH-level output (source) current		V_O = 4.6, V_I = 0 or 5V	V_{DD} = 5V	0.52		0.44		0.36		mA
			V_O = 9.5, V_I = 0 or 10V	V_{DD} = 10V	1.3		1.1		0.9		
			V_O = 13.5V, V_I = 0 or 15V	V_{DD} = 15V	3.6		3.0		2.4		
$-I_{OH}$	HIGH-level output (source) current		V_O = 2.5V, V_I = 0 or 5V	V_{DD} = 5V	1.7		1.4		1.1		mA
$\pm I_{IN}$	Input leakage current		V_I = 0 = 15V	V_{DD} = 15V		0.3		0.3		1.0	μA
I_{OZH}	HIGH-level 3-state output leakage current		Output returned to V_{DD}	V_{DD} = 15V		1.6		1.6		12.0	μA
$-I_{OZL}$	LOW-level 3-state output leakage current		Output returned to V_{SS}	V_{DD} = 15V		1.6		1.6		12.0	μA

CMOS PRODUCT GUIDE/AVAILABILITY

TYPE NUMBER	FUNCTION	SUFFIX*
HEF4000B	Dual 3-Input NOR Gate and Inverter	P, T
HEF4001B	Quad 2-Input NOR Gate	P, T
HEF4001UB	Quad 2-Input NOR Gate, Unbuffered	P, T
HEF4002B	Dual 4-Input NOR Gate	P, T
HEF4006B	18-Stage Static Shift Register	P, T
HEF4007UB	Dual Complementary Pair and Inverter	P, T
HEF4008B	4-Bit Binary Full Adder	P, T
HEF4011B	Quad 2-Input NAND Gate	P, T
HEF4011UB	Quad 2-Input NAND Gate, Unbuffered	P, T
HEF4012B	Dual 4-Input NAND Gate	P, T
HEF4013B	Dual D-Type Flip-Flop	P, T
HEF4014B	8-Bit Static Shift Register	P, T
HEF4015B	Dual 4-Bit Static Shift Register	P, T
HEF4016B	Quad Bilateral Switches	P, T
HEF4017B	5-Stage Johnson Counter	P. T
HEF4018B	Presettable Divide-by-n Counter	P, T
HEF4019B	Quad 2-Input Multiplexer	P, T
HEF4020B	14-Stage Binary Counter	P, T
HEF4021B	8-Bit Static Shift Register	P, T
HEF4022B	4-Stage Divide-by-8 Johnson Counter	P, T
HEF4023B	Triple 3-Input NAND Gate	P, T
HEF4024B	7-Stage Binary Counter	P, T
HEF4025B	Triple 3-Input NOR Gate	P, T
HEF4027B	Dual JK Flip-Flop	P, T
HEF4028B	1-of-10 Decoder	P, T
HEF4029B	Synchronous Up/Down-Binary/ Decade Counter	P, T
HEF4030B	Quad Exclusive-OR Gate	P, T
HEF4031B	64-Stage Static Shift Register	P, T
HEF4035B	4-Bit Universal Shift Register	P, T
HEF4040B	12-Stage Binary Counter	P, T
HEF4041B	Quad True/Complement Buffer	P, T
HEF4042B	Quad D-Latch	P, T
HEF4043B	Quad R/S Latch with 3-State Outputs	P, T
HEF4044B	Quad R/S Latch with 3-State Outputs	P, T
HEF4046B	Phase-Locked Loop	P, T
HEF4047B	Monostable/Astable Multivibrator	P, T
HEF4049B	Hex Inverting Buffers	P, T
HEF4050B	Hex Non-Inverting Buffers	P, T
HEF4051B	8-Channel Analog Multiplexer/ Demultiplexer	P, T
HEF4052B	Dual 4-Channel Analog Multiplexer/ Demultiplexer	P, T
HEF4053B	Triple 2-Channel Analog Multiplexer/Demultiplexer	P, T
HEF4059B	Programmable Divide-by-n Counter	P, T
HEF4060B	14-Stage Ripple-Carry Binary Counter/Divider and Oscillator	P, T
HEF4066B	Quad Bilateral Switches	P, T
HEF4067B	16-Channel Analog Multiplexer/ Demultiplexer	P, T

TYPE NUMBER	FUNCTION	SUFFIX*
HEF4068B	8-Input NAND Gate	P, T
HEF4069UB	Hex Inverter	P, T
HEF4070B	Quad Exclusive-OR Gate	P, T
HEF4071B	Quad 2-Input OR Gate	P, T
HEF4072B	Dual 4-Input OR Gate	P, T
HEF4073B	Triple 3-Input AND Gate	P, T
HEF4075B	Triple 3-Input OR Gate	P, T
HEF4076B	Quad D-Type Register with 3-State Outputs	P, T
HEF4077B	Quad Exclusive-NOR Gate	P, T
HEF4078B	8-Input NOR Gate	P, T
HEF4081B	Quad 2-Input AND Gate	P, T
HEF4082B	Dual 4-Input AND Gate	P, T
HEF4085B	Dual 2-Wide 2-Input AND-OR-Invert Gate	P, T
HEF4086B	4-Wide 2-Input AND-OR-Invert Gate	P, T
HEF4093B	Quad 2-Input NAND Schmitt Trigger	P, T
HEF4094B	8-Stage Shift-and-Store Bus Register	P, T
HEF4104B	Quad Low-to-High Voltage Translator	P, T
HEF4502B	Strobed Hex Inverter/Buffer	P, T
HEF4505B	64-Bit Static Read/Write RAM	P
HEF4508B	Dual 4-Bit Latch	P, T
HEF4510B	BCD Up/Down Counter	P, T
HEF4511B	BCD to 7-Segment Latch/Decoder/ Driver	P, T
HEF4512B	8-Input Multiplexer with 3-State Output	P, T
HEF4514B	1-of-16 Decoder/Demultiplexer with Input Latches	P, T
HEF4515B	1-of-16 Decoder/Demultiplexer with Input Latches	P, T
HEF4516B	Binary Up/Down Counter	P, T
HEF4517B	Dual 64-Bit Static Shift Register	P, T
HEF4518B	Dual BCD Counter	P, T
HEF4519B	Quad 2-Input Multiplexer	P, T
HEF4520B	Dual Binary Counter	P, T
HEF4521B	24-Stage Frequency Divider	P, T
HEF4522B	Programmable 4-Bit BCD Down Counter	P, T
HEF4526B	Programmable 4-Bit Binary Down Counter	P, T
HEF4527B	BCD Rate Multiplier	P, T
HEF4528B	Dual Monostable Multivibrator	P, T
HEF4531B	13-Input Parity Checker/Generator	P, T
HEF4532B	8-Input Priority Encoder	P, T
HEF4534B	Real-Time 5-Decade Counter	P, T
HEF4538B	Dual Precision Monostable Multivibrator	P, T
HEF4539B	Dual 4-Input Multiplexer	P, T

P = Plastic Package (DIL); T = SO Package; *Add the Suffix to the Type Number on all orders.

© IC MASTER 1984

CMOS PRODUCT GUIDE/AVAILABILITY

TYPE NUMBER	FUNCTION	SUFFIX*
HEF4541B	Programmable Timer	P, T
HEF4543B	BCD to 7-Segment Latch/Decoder/ Driver	P, T
HEF4555B	Dual 1-of-4 Decoder/Demultiplexer	P, T
HEF4556B	Dual 1-of-4 Decoder/Demultiplexer	P, T
HEF4557B	1-to-64 Bit Variable Length Shift Register	P, T
HEF4585B	4-Bit Magnitude Comparator	P, T
HEF4720B; V	256-Bit 1-Bit per Word RAM	P, T
HEF4724B	8-Bit Addressable Latch	P, T
HEF4731B; V	Quad 64-Bit Static Shift Register	P
HEF4737B; V	Quad Static Decade Counters	P
HEF4738V	IEC/IEEE Bus Interface	P
HEF4750V	Frequency Synthesizer	D
HEF4751V	Universal Divider	D, P
HEF4752V	AC Motor Control Circuit	P
HEF4754V	18-Element Bar Graph LCD Driver	P, T
HEF40097B	3-State Hex Non-Inverting Buffer	P, T
HEF40098B	3-State Hex Inverting Buffer	P, T
HEF40106B	Hex Schmitt Trigger	P, T
HEF40160B	4-Bit Synchronous Decade Counter, Asynchronous Reset	P, T
HEF40161B	4-Bit Synchronous Binary Counter, Asynchronous Reset	P, T

TYPE NUMBER	FUNCTION	SUFFIX*
HEF40162B	4-Bit Synchronous Decade Counter, Synchronous Reset	P, T
HEF40163B	4-Bit Synchronous Binary Counter, Synchronous Reset	P, T
HEF40174B	Hex D-Type Flip-Flop	P, T
HEF40175B	Quad D-Type Flip-Flop	P, T
HEF40192B	4-Bit Up/Down Decade Counter	P, T
HEF40193B	4-Bit Up/Down Binary Counter	P, T
HEF40194B	4-Bit Bidirectional Universal Shift Register	P, T
HEF40195B	4-Bit Universal Shift Register	P, T
HEF40240B	Octal Inverting Buffers with 3-State Outputs	P, T
HEF40244B	Octal Buffers with 3-State Outputs	P, T
HEF40245B	Octal Bus Transceiver with 3-State Outputs	P, T
HEF40373B	Octal Transparent Latch with 3-State Outputs	P, T
HEF40374B	Octal D-Type Flip-Flop with 3-State Outputs	P, T

P = Plastic Package (DIL); T = SO Package; *Add the Suffix to the Type Number on all orders.

PRODUCT IDENTIFICATION

HEF 4000 BXY
- HE : Serial Letters
- F : −40°C/+85°C OPERATING
- (U) B : (Un) Buffered Output Stage

PACKAGE (X)
- P : Plastic (Epoxy 410B)
- T : SO (Miniature)

SCREEN (Y)
- B : BURN-IN

DATE CODE:

XXX 8215 X

- X — DESIGN VERSION
- 8215 — ASSY DATE (YR/WK)
- X — Q RESP CENTER
- X — ASSY CENTER
- X — WAFER FAB CENTER

- H = Nijmegen — NL
- S = Philips Taiwan
- M = Faselec — SW
- N = Subc. Manila
- R = Subc. Manila
- N = Signetics — BKK

EXAMPLE:

HEF40245BP
HRH8215 1

ORDERING INFORMATION

Plastic Device	HEF4XXX BPN*
SO Package	HEF4XXX BTD*

*NOTE: The suffix N or D does not appear on the part marking; it is used only for internal order entry.

HIGH-SPEED CMOS

WE GOT IT RIGHT THE FIRST TIME

We got it right the first time in the '70s when we used the self-aligning 6μm (and later 4μm) polycrystalline silicon-gate CMOS process together with our technique for the local oxidation of silicon (LOCOS) to manufacture the HE4000B family. These silicon-gate p-well CMOS circuits were nearly three times as fast as the then available metal-gate CMOS circuits and yet consumed only about 65% of the dynamic power.

Now we've got it right again for the '80s by using the same proven CMOS manufacturing facilities and process, but with tighter layout rules, a 3μm gate structure and thinner oxide in the gate region for our new 54/74HC, 54/74HCT high-speed CMOS family of logic integrated circuits. This enhancement of the CMOS process results in a further fivefold speed increase and a tenfold increase of drive capability without increase of power consumption.

The high-speed CMOS family has the low power consumption, high input noise immunity and wide operating temperature range of earlier silicon-gate CMOS, combined with the high speed and drive capability previously only attainable with bipolar LSTTL. In new CMOS system designs it eliminates the need to compromise between speed and power consumption and allows optimization of performance. In existing designs, high-speed CMOS circuits can directly replace some or all of the logic elements from other families, both CMOS and bipolar LSTTL, without interfacing problems. This can considerably reduce costs by simplifying power supply and cooling requirements, allowing higher packing density, increasing reliability and extending the operating life of equipment.

The initial high-speed CMOS family, which will be extended in the future, comprises 117 circuits, all of which are available in two versions. Circuits with the type number suffix HC are fully buffered, with CMOS input switching levels for high noise immunity, typical gate operating current of 3μA at 10kHz, negligible quiescent supply and input current, typical gate propagation delay of 9 to 11.5ns (capacitive load 15 to 100pF), and operate from a supply of 2V to 6V; their main role is as faster CMOS replacements for new designs. There are also unbuffered inverters available (HCU suffix) for constructing RC or crystal oscillators and other feedback circuits operating in the linear mode.

Circuits with the type number suffix HCT are also fully buffered, with the same features and functions as HC types, but have TTL input switching levels, operate from a supply voltage range of 5V ±10%, and are pin-compatible with most popular LSTTL circuits. Their main role is replacing LSTTL circuits to reduce power consumption without reducing speed.

HOW WE GOT IT RIGHT FOR HCMOS

SUPPLY VOLTAGE

Since the HCMOS circuits with the type number suffix HC or HCU are faster alternatives to earlier CMOS types for new designs, the lower supply voltage limit has been extended to 2V, giving an overall range of 2V to 6V. This gives an important advantage over earlier CMOS circuits because it will permit the continued use of the HCMOS circuits in conjunction with future generations of memories and microcomputers which will require a supply voltage of less than 5V. The 3:1 ratio between the lower and upper limits of the supply voltage allows the use of simple power supplies, facilitates battery operation and allows the use of a lithium battery as a backup supply.

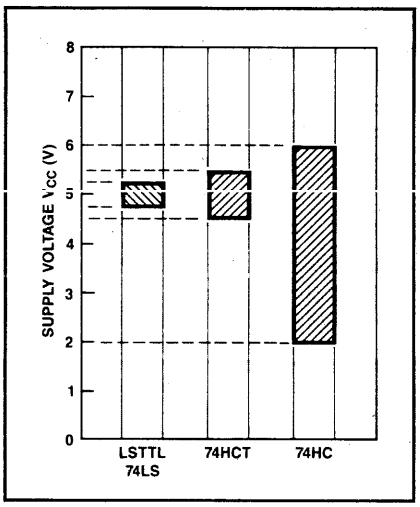

Figure 1. Supply Voltage Ranges Show That Standard Temperature Range HCMOS (HCT) Circuits Have ±5% More Margin Than Standard Temperature Range (74LS) LSTTL Circuits. HCMOS Circuits With the Type Number Suffix HC Work With a Supply Voltage as Low as 2V.

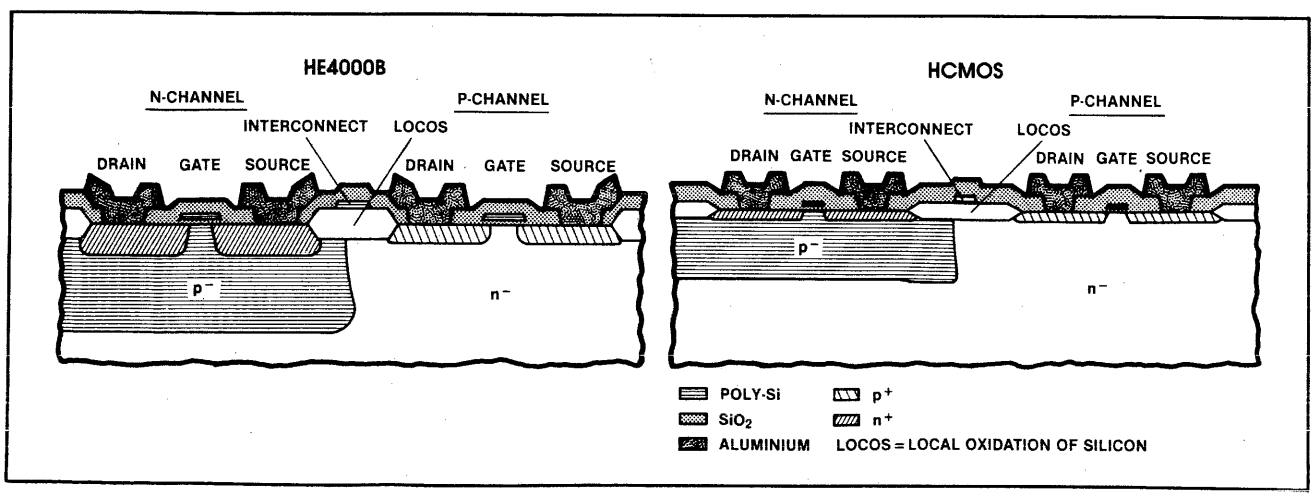

The Process for HCMOS Compared With That for the HE4000B Family of Silicon-Gate CMOS

© IC MASTER 1984

HIGH-SPEED CMOS

HCMOS circuits with the type number suffix HCT are pin-compatible with equivalent LSTTL circuits and are intended to replace them to reduce power consumption in existing circuits. The HCT circuits therefore retain the traditional LSTTL nominal supply of 5V, but the range has been extended from ±5% to ±10% for both temperature ranges. This allows LSTTL circuits from the extended temperature range to be replaced by HCMOS circuits from the standard temperature range.

POWER DISSIPATION

One of the most important requirements for any logic system is low power dissipation. Apart from conserving energy, low power dissipation minimizes system cost and improves reliability because it reduces heat. It simplifies power supplies (to the point where batteries can be used in some cases), and can eliminate hardware such as heatsinks and fans. In turn, cooler boards allow higher component packing densities with consequent reduction of equipment size and weight.

Considering quiescent power dissipation first, Figure 2 shows that all HCMOS functions dissipate more than five orders of magnitude less power than equivalent LSTTL functions. This is because, unlike TTL circuits, CMOS circuits only dissipate negligible power due to leakage currents when they are not switching. Figure 3 shows that the maximum quiescent current of complete HCMOS packages of 4 gates held in the HIGH state at 85°C is only 1.3% of that of a similar LSTTL package.

Figure 4 compares the dynamic power dissipation of single HCMOS and LSTTL gates and flip-flops driving a 50pF load and indicates a wide power differential at lower frequencies. This is because the high quiescent current of the LSTTL circuits predominates over their transient current and makes the power dissipation independent of frequency below about 1MHz. Conversely, in the HCMOS circuits, the quiescent current is so low that the transient current predominates and their power dissipation is therefore directly proportional to frequency.

The power crossover frequency is about 5MHz for a gate, and above 10MHz for a flip-flop. However, the graphs are only for one gate and one flip-flop. If the dynamic power dissipation is considered for a total package of four gates with only one gate switching, the situation changes considerably. Since all four LSTTL gates draw current regardless of whether they are switching or not, the power dissipation for the single LSTTL gate in Figure 4 must be increased by 6mW (three static gates) at all frequencies. In the case of the HCMOS package, only the gate that is switching will draw current. The HCMOS plot in Figure 4 therefore also holds good for the total package of four gates. It is thus clear that, if Figure 4 is considered for the total package, the power crossover frequencies increase to well above 10MHz.

It is interesting to note that Figure 5 shows that, in a more complex circuit comprising a chain of ten flip-flops, the power crossover frequency increases beyond the upper limit of the operating frequency range for HCMOS. This is because, in the HCMOS divider, each flip-flop dissipates half the power of its predecessor because it is operating at half the frequency. In the LSTTL divider, all 10 flip-flops dissipate the same power. The power crossover frequency is therefore extended to the upper limit of the LSTTL and HCMOS operating frequency.

From the foregoing, it is obvious that HCMOS circuits are far less power hungry than their LSTTL equivalents. HCMOS circuits dissipate about the same power as earlier silicon-gate CMOS circuits. This is because HCMOS output buffers are made large enough to source and sink-LSTTL currents. Nevertheless, HCMOS circuits still retain an important advantage because they are five times as fast as the earlier silicon-gate CMOS circuits.

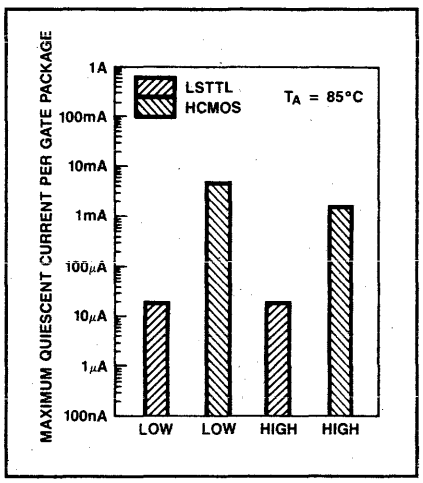

Figure 3. Even a Total HCMOS Package of Four Gates Under Worst-Case Static Conditions Consumes More than Two Orders of Magnitude Less Power Than an Equivalent LSTTL Gate Package.

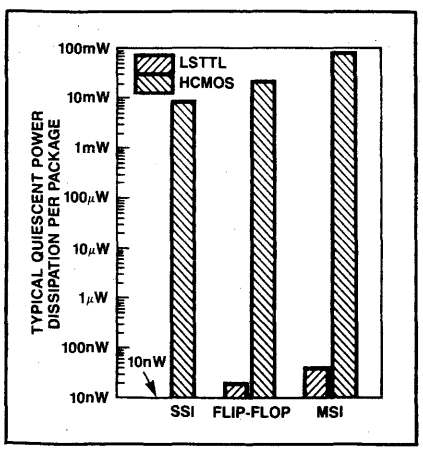

Figure 2. Unlike LSTTL Circuits, HCMOS Circuits Consume Very Little Power When They Are Not Switching.

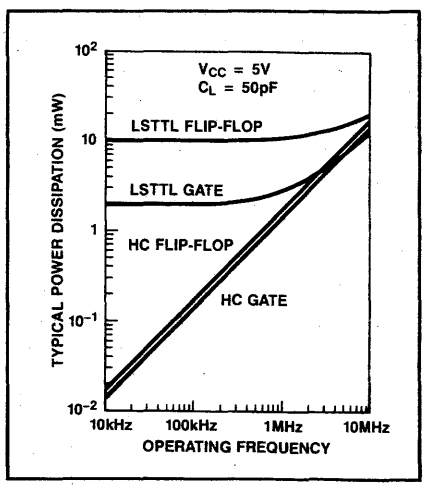

Figure 4. The Power Crossover Frequency is About 5MHz For a Single Gate and Above 10MHz For a Single Flip-Flop.

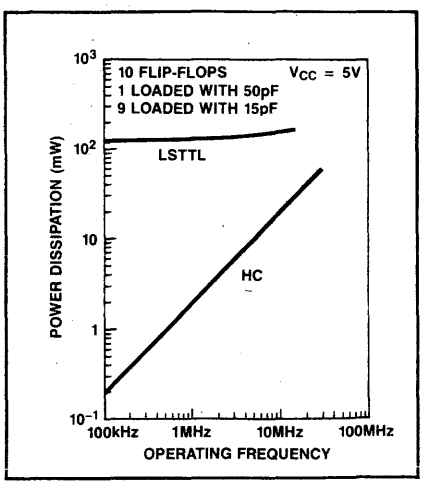

Figure 5. A Simulated MSI Circuit Shows Distinct Power Saving At All Frequencies.

© IC MASTER 1984

HIGH-SPEED CMOS

INPUT LEVELS AND NOISE IMMUNITY

For HCMOS circuits with the type number suffix HC and with standard outputs, the LOW level noise immunity with a 5V supply is 18% of V_{CC}, and the HIGH level noise immunity is 28% of V_{CC}. This is a considerable improvement over LSTTL where the margin in the LOW state is only 8% of V_{CC}, and the HIGH level margin is 14% of V_{CC}. As shown in Figure 6, the margins are even greater for HCMOS with a higher supply voltage. HCMOS circuits are therefore ideally suited for use in noisy environments such as are encountered in many applications such as industry, telephony and mobile equipment.

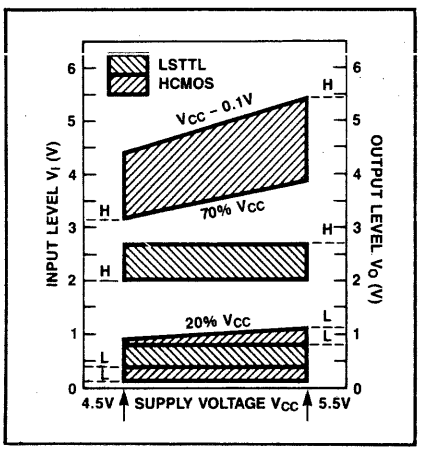

Figure 6. Noise Margins of HCMOS Are Wider Than Those of LSTTL

Because the input voltage of CMOS circuits is not compatible with that of TTL circuits, it is normally necessary to sacrifice noise margins, speed and quiescent power dissipation to achieve an interface in mixed technology designs. This is not so with the 54/74 family because it includes many circuits with TTL compatible input levels (HCT type number suffix) so that they can directly replace their LSTTL counterparts without the addition of pull-up resistors at the LSTTL outputs.

Another important advantage of HCMOS is the low level of input current. As shown in Figure 7, the 54/74 family circuits draw a maximum of 1μA of input current in either the LOW or HIGH state. This is only 1/400th of the LSTTL input current in the LOW state.

PROPAGATION DELAY

A key feature of the 54/74 family is its speed, which is generally compatible with equivalent circuits from the LSTTL range. This makes the new HCMOS circuits eminently suitable

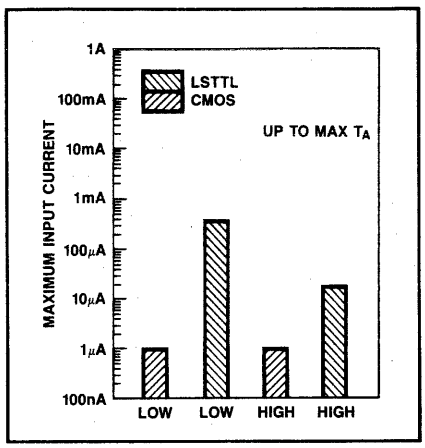

Figure 7. Input Current for HCMOS is Symmetrical and Much Lower Than That of LSTTL. Theoretically, One HCMOS Output Can Drive Nearly a Thousand Inputs, but Capacitance Considerations Will Probably Predominate.

as comparable-speed, lower-power replacements for LSTTL where the use of CMOS circuits has hitherto been excluded because they were too slow. The unique combination of high speed and low power dissipation for the new family has been obtained by using a new single polysilicon CMOS integration process with an enhanced 3μm gate structure to obtain the optimum propagation delay and rise and fall times.

The propagation delay for a single gate is 10ns and is only 8% of the delay of metal-gate CMOS, 17% of that of earlier silicon-gate CMOS, and about the same as LSTTL. The typical switching frequency limit for a flip-flop is 50MHz. Moreover, due to the high current drive capability of the low impedance outputs of HCMOS, the gate propagation delay variation is only 9ns to 11.5ns over a load capacitance range of 15pF to 100pF. This variation of propagation delay with load is much less than with most other digital ICs.

INPUT PROTECTION

The improved CMOS integration process used for the 54/74 family also allows polysilicon to be used as a resistor structure at all inputs to slow down fast input transients caused by electrostatic discharges and dissipate some of their energy. Although this, together with two stages of diode clamping provides improved protection for the input gates of HCMOS devices, the usual CMOS handling precautions should still be observed.

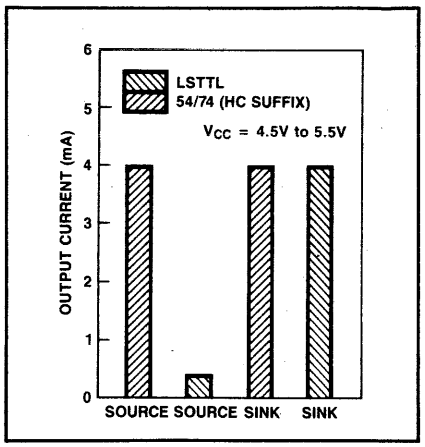

Figure 8. Standard HCMOS Outputs Can Source or Sink 4mA (10 LSTTL Loads). Bus Driver Ouptuts Can Source or Sink 6mA (15 LSTTL Loads).

FAN-OUT

Although the 54/74 family has the low input current which is characteristic of CMOS circuits, it is capable of providing the same output current levels as LSTTL without sacrifice of speed or noise immunity. However, unlike LSTTL circuits, all HCMOS circuits, except devices with the type number suffix HCU, have standardized output buffers which allow symmetrical output current sinking and sourcing to obtain equal rise and fall times. This simplifies design and results in optimum speed and a.c. performance.

The outputs of all standard temperature range devices (74 series), except bus drivers, can source and sink up to 4mA (10 LSTTL loads). The outputs of bus drivers in the standard temperature range can source and sink up to 50% more current (6mA = 15 LSTTL loads) in keeping with their intended application. The drive capability of HCMOS circuits in the extended temperature range (54 series) is 3.4mA (8 LSTTL loads) for all devices except bus drivers which can source or sink up to 5.1mA (12 LSTTL loads). All the drive currents quoted remain valid over the entire temperature range. The HCMOS drive capability is thus ten times that of earlier silicon-gate CMOS circuits and, since the required input current for HCMOS circuits is so low, the fan-out when driving other CMOS or HCMOS circuits is only limited by load capacitance considerations and not by the available drive power. When driving LSTTL loads, the fan-out of HCMOS is equal to that of LSTTL.

© IC MASTER 1984

ABSOLUTE MAXIMUM RATINGS

SYMBOL AND PARAMETER			RATING	UNIT
V_{CC}	Supply voltage		−0.5 to 7.0	V
$\pm I_{IK}$	Input diode current $V_I \leq -0.5V$ or $V_I \geq +0.5V$		20	mA
$+I_{DK}$,	Output diode current $V_O \leq -0.5V$ or $V_O \geq +0.5V$		20	mA
$\pm I_{OH}$, $\pm I_{OL}$	Output source or sink current $-0.5V \leq V_O \leq V_{CC} +0.5V$	Standard outputs	25	mA
		Bus driver outputs	35	
$\pm I_{CC}$, $\pm I_{GND}$	V_{CC} or GND current	Standard outputs	50	mA
		Bus driver outputs	70	
T_{stg}	Storage temperature range		−65 to +150	°C

RECOMMENDED OPERATION CONDITIONS

SYMBOL AND PARAMETER			54/74 HC			54/74 HCU			54/74 HCT			UNIT
			MIN	Typ	Max	Min	Typ	Max	Min	Typ	Max	
V_{CC}	Supply voltage		2.0	5.0	6.0	2.0	5.0	6.0	4.5	5.0	5.5	V
V_I	Input voltage range		0		V_{CC}	0		V_{CC}	0		V_{CC}	V
V_O	Output voltage range		0		V_{CC}	0		V_{CC}	0		V_{CC}	V
T_{amb}	Operating ambient temperature range	Mil	−55		+125	−55		+125	−55		+125	°C
		Com'l	−40		+85	−40		+85	−40		+85	
t_r t_f	Input rise and fall times (Note 1)	V_{CC} = 2.0V			1000			1000				ns
		V_{CC} = 4.5V		6.0	500		6.0	500		6.0	500	
		V_{CC} = 6.0V			400			400				

NOTE:
1. Except for Schmitt trigger inputs.

DC ELECTRICAL CHARACTERISTICS

SYMBOL AND PARAMETER		TEST CONDITIONS	T_{amb}(°C) 54/74 HC +25 Min	Typ	Max	74 HC −40 to 85 Min	Max	54 HC −55 to 125 Min	Max	UNIT
V_{IH} HIGH - level input voltage		V_{CC} = 2V	1.5	1.3		1.5		1.5		V
		V_{CC} = 4.5V	3.15	2.4		3.15		3.15		
		V_{CC} = 6V	4.2	3.1		4.2		4.2		
V_{IL} LOW - level input voltage		V_{CC} = 2V		0.7	0.3		0.3		0.3	
		V_{CC} = 4.5V		1.8	0.9		0.9		0.9	
		V_{CC} = 6V		2.3	1.2		1.2		1.2	
V_{OH} HIGH - level output voltage	All outputs	V_{CC} = 2V, V_{IN} = V_{IH} or V_{IL}, $-I_O$ = 20 μA	1.9	2.0		1.9		1.9		V
		V_{CC} = 4.5V, V_{IN} = V_{IH} or V_{IL}, $-I_O$ = 20 μA	4.4	4.5		4.4		4.4		
		V_{CC} = 6V, V_{IN} = V_{IH} or V_{IL}, $-I_O$ = 20 μA	5.9	6.0		5.9		5.9		
	Standard outputs	V_{CC} = 4.5 V, V_{IN} = V_{IH} or V_{IL}, $-I_O$ = 4 mA	3.98			3.84		3.7		
		V_{CC} = 6V, V_{IN} = V_{IH} or V_{IL}, $-I_O$ = 5.2 mA	5.48			5.34		5.2		
	Bus driver outputs	V_{CC} = 4.5 V, V_{IN} = V_{IH} or V_{IL}, $-I_O$ = 6 mA	3.98			3.84		3.7		
		V_{CC} = 6V, V_{IN} = V_{IH} or V_{IL}, $-I_O$ = 7.8 mA	5.48			5.34		5.2		
V_{OL} LOW - level output voltage	All outputs	V_{CC} = 2V, V_{IN} = V_{IH} or V_{IL}, I_O = 20 μA		0	0.1		0.1		0.1	V
		V_{CC} = 4.5V, V_{IN} = V_{IH} or V_{IL}, I_O = 20 μA		0	0.1		0.1		0.1	
		V_{CC} = 6V, V_{IN} = V_{IH} or V_{IL}, I_O = 20 μA		0	0.1		0.1		0.1	
	Standard outputs	V_{CC} = 4.5V, V_{IN} = V_{IH} or V_{IL}, I_O = 4 mA			0.26		0.33		0.4	
		V_{CC} = 6V, V_{IN} = V_{IH} or V_{IL}, I_O = 5.2 mA			0.26		0.33		0.4	
	Bus driver outputs	V_{CC} = 4.5V, V_{IN} = V_{IH} or V_{IL}, I_O = 6 mA			0.26		0.33		0.4	
		V_{CC} = 6V, V_{IN} = V_{IH} or V_{IL}, I_O = 7.8 mA			0.26		0.33		0.4	
$\pm I_I$ Input leakage current		V_{CC} = 6V, V_{IN} = V_{CC} or GND			0.1		1.0		1.0	μA
$\pm I_S$ Analog switch OFF - state current per channel		V_{CC} = 6V, V_{IN} = V_{IH} or V_{IL}, $\|V_S\|$ = V_{CC}			0.1		1.0		1.0	μA
$\pm I_{OZ}$ 3 - state output OFF - state current		V_{CC} = 6V, V_{IN} = V_{IH} or V_{IL}, V_O = V_{CC} or GND			0.5		5.0		10.0	μA
I_{CC} Quiescent supply current	SSI	V_{CC} = 6V, V_{IN} = V_{CC} or GND, I_O = 0			2.0		20.0		40.0	μA
	Flip-flops	V_{CC} = 6V, V_{IN} = V_{CC} or GND, I_O = 0			4.0		40.0		80.0	
	MSI	V_{CC} = 6V, V_{IN} = V_{CC} or GND, I_O = 0			8.0		80.0		160.0	

Note:
Voltages are referenced to GND (ground = 0V)

© IC MASTER 1984

DC ELECTRICAL CHARACTERISTICS

SYMBOL AND PARAMETER			TEST CONDITIONS	T_{amb} (°C) 54/74 HCT +25 Min	Typ	Max	74 HCT −40 to 85 Min	Max	54 HCT −55 to 125 Min	Max	UNIT
V_{IH}	HIGH-level input voltage		V_{CC} = 4.5 to 5.5V	2.0			2.0		2.0		V
V_{IL}	LOW-level input voltage		V_{CC} = 4.5 to 5.5V			0.8		0.8		0.8	V
V_{OH}	HIGH-level output voltage	All outputs	V_{CC} = 4.5, V_{IN} = V_{IH} or V_{IL}, $-I_O$ = 20μA	4.4	4.5		4.4		4.4		V
		Standard outputs	V_{CC} = 4.5, V_{IN} = V_{IH} or V_{IL}, $-I_O$ = 4mA	3.98			3.84		3.7		
		Bus driver outputs	V_{CC} = 4.5, V_{IN} = V_{IH} or V_{IL}, $-I_O$ = 6mA	3.98			3.84		3.7		
V_{OL}	LOW-level output voltage	All outputs	V_{CC} = 4.5, V_{IN} = V_{IH} or V_{IL}, I_O = 20μA		0	0.1		0.1		0.1	V
		Standard outputs	V_{CC} = 4.5, V_{IN} = V_{IH} or V_{IL}, I_O = 4mA			0.26		0.33		0.4	
		Bus driver outputs	V_{CC} = 4.5, V_{IN} = V_{IH} or V_{IL}, I_O = 6mA			0.26		0.33		0.4	
$\pm I_I$	Input leakage current		V_{CC} = 5.5V, V_{IN} = V_{IH} or V_{IL}			0.1		0.1		0.1	μA
$\pm I_S$	Analog switch OFF-state current per channel		V_{CC} = 5.5V, V_{IN} = V_{IH} or V_{IL}, $\|V_S\|$ = V_{CC}			0.1		1.0		1.0	μA
$\pm I_{OZ}$	3-state output OFF-state current		V_{CC} = 5.5V, V_{IN} = V_{IH} or V_{IL}, I_O = 0[1]			0.5		5.0		10.0	μA
I_{CC}	Quiescent supply current	SSI	V_{CC} = 5.5V, V_{IN} = V_{CC} or GND, I_O = 0			2.0		20.0		40.0	μA
		Flip-flops	V_{CC} = 5.5V, V_{IN} = V_{CC} or GND, I_O = 0			4.0		40.0		80.0	
		MSI	V_{CC} = 5.5V, V_{IN} = V_{CC} or GND, I_O = 0			8.0		80.0		160.0	
I_C	Supply current		V_{CC} = 5.5V, V_{IN} = 2.4V or 0.5V, I_O = 0[1]								μA

NOTES:
1. V_O = V_{CC} or GND per input-pin, other inputs at V_{CC} or GND.
2. Per input-pin, other inputs at V_{CC} or GND.
3. Voltages are referenced to GND (ground = OV).

© IC MASTER 1984

DC ELECTRICAL CHARACTERISTICS

SYMBOL AND PARAMETER		TEST CONDITIONS	T_{amb} (°C) 54/74 HC +25 Min	Typ	Max	74 HC −40 to 85 Min	Max	54 HC −55 to 125 Min	Max	UNIT
V_{IH}	HIGH-level input voltage	V_{CC} = 2V	1.7			1.7		1.7		V
		V_{CC} = 4.5V	3.6			3.6		3.6		
		V_{CC} = 6V	4.8			4.8		4.8		
V_{IL}	LOW-level input voltage	V_{CC} = 2V			0.3		0.3		0.3	V
		V_{CC} = 4.5V			0.9		0.9		0.9	
		V_{CC} = 6V			1.2		1.2		1.2	
V_{OH}	HIGH-level output voltage	V_{CC} = 2V, V_{IN} = V_{IH} or V_{IL}, $-I_O$ = 20μA	1.8			1.8		1.8		V
		V_{CC} = 4.5V, V_{IN} = V_{IH} or V_{IL}, $-I_O$ = 20μA	4.0			4.0		4.0		
		V_{CC} = 6V, V_{IN} = V_{IH} or V_{IL}, $-I_O$ = 20μA	5.5			5.5		5.5		
		V_{CC} = 4.5V, V_{IN} = V_{IH} or V_{IL}, $-I_O$ = 4mA	3.98			3.84		3.7		
		V_{CC} = 6V, V_{IN} = V_{IH} or V_{IL}, $-I_O$ = 5.2mA	5.48			5.34		5.2		
V_{OL}	LOW-level output voltage	V_{CC} = 2V, V_{IN} = V_{IH} or V_{IL}, I_O = 20μA			0.2		0.2		0.2	V
		V_{CC} = 4.5V, V_{IN} = V_{IH} or V_{IL}, I_O = 20μA			0.5		0.5		0.5	
		V_{CC} = 6V, V_{IN} = V_{IH} or V_{IL}, I_O = 20μA			0.5		0.5		0.5	
		V_{CC} = 4.5V, V_{IN} = V_{IH} or V_{IL}, I_O = 4mA			0.26		0.33		0.4	
		V_{CC} = 6V, V_{IN} = V_{IH} or V_{IL}, I_O = 5.2mA			0.26		0.33		0.4	
$\pm I_I$	LOW-level output voltage	V_{CC} = 6V, V_{IN} = V_{CC} or GND			0.1		1.0		1.0	μA
I_{CC}	Quiescent supply current, SSI	V_{CC} = 6V, V_{IN} = V_{CC} or GND, I_O = 0			2.0		20.0		40.0	μA

NOTE: Voltages are referenced to GND (ground = 0_V).

© IC MASTER 1984

HC/HCT PRODUCT GUIDE/AVAILABILITY

HIGH SPEED CMOS

DEVICE	DESCRIPTION	AVAIL-ABILITY
HC/HCT00	Quad 2-Input NAND Gate	A
HC/HCT02	Quad 2-Input NOR Gate	Q1 84
HC/HCT04	Hex Inverter	Q2 84
HCU04	Hex Inverter	A
HC/HCT08	Quad 2-Input AND Gate	Q2 84
HC/HCT10	Triple 3-Input NAND Gate	Q2 84
HC/HCT11	Triple 3-Input AND Gate	Q2 84
HC/HCT14	Hex Inverting Schmitt Trigger	Q2 84
HC/HCT20	Dual 4-Input NAND Gate	Q2 84
HC/HCT27	Triple 3-Input NOR Gate	Q1 84
HC/HCT32	Quad 2-Input OR Gate	Q2 84
HC/HCT42	BCD-to-Decimal Decoder	Q2 84
HC/HCT73*	Dual JK Flip-Flop with Clear, Negative-Edge Trigger	Q1 84
HC/HCT74	Dual D-Type Flip-Flop with Set and Clear, Positive-Edge Trigger	A
HC/HCT75	4-Bit Bistable Latch	Q1 84
HC/HCT85	4-Bit Magnitude Comparator	Q2 84
HC/HCT86	Quad 2-Input Exclusive-OR Gate	A
HC/HCT107	Dual JK Flip-Flop with Clear, Negative-Edge Trigger	Q1 84
HC/HCT109	Dual JK Flip-Flop with Set and Clear, Positive-Edge Trigger	Q1 84
HC/HCT112	Dual JK Flip-Flop with Set and Clear, Negative-Edge Trigger	Q2 84
HC/HCT123	Dual Retriggerable Monostable Multivibrator	A
HC/HCT132	Quad 2-Input NAND Schmitt Trigger	A
HC/HCT138	1-of-8 Decoder/Demultiplexer	Q1 84
HC/HCT139	Dual 1-of-4 Decoder/ Demultiplexer	A
HC/HCT147	10-to-4 Line Priority Encoder	Q1 84
HC/HCT151	8-Input Multiplexer	Q1 84
HC/HCT153	Dual 4-Input Multiplexer	A
HC/HCT154	1-of-16 Decoder/Demultiplexer	A
HC/HCT157	Quad 2-Input Multiplexer	A
HC/HCT158	Quad 2-Input Multiplexer, Inverting	A
HC/HCT160	Synchronous BCD Decade Counter, Asynchronous Clear	Q2 84
HC/HCT161	Synchronous 4-Bit Binary Counter, Asynchronous Clear	Q2 84
HC/HCT162	Synchronous BCD Decade Counter, Synchronous Clear	Q2 84
HC/HCT163	Synchronous 4-Bit Binary Counter, Synchronous Clear	Q2 84
HC/HCT164	8-Bit Serial-In/Parallel-Out Shift Register	A
HC/HCT165	8-Bit Parallel-In/Serial-Out Shift Register	A
HC/HCT166	8-Bit Parallel/Serial-In/Serial-Out Shift Register	Q1 84
HC/HCT173	Quad D-Type Flip-Flop, Positive-Edge Trigger, 3-State	Q2 84
HC/HCT174	Hex D-Type Flip-Flop with Clear, Positive-Edge Trigger	Q2 84
HC/HCT175	Quad D-Type Flip-Flop with Clear, Positive-Edge Trigger	Q1 84

DEVICE	DESCRIPTION	AVAIL-ABILITY
HC/HCT190	Presettable Decade Up/Down Counter	Q2 84
HC/HCT191	Presettable 4-Bit Binary Up/Down Counter	Q2 84
HC/HCT192	Presettable BCD Decade Up/Down Counter	Q1 84
HC/HCT193	Presettable 4-Bit Binary Up/Down Counter, Dual Clock	Q2 84
HC/HCT194	4-Bit Bidirectional Universal Shift Register	A
HC/HCT195	4-Bit Universal Shift Register	A
HC/HCT221	Dual Monostable Multivibrator	P
HC/HCT238	1-of-8 Decoder/Demultiplexer, True/Inverting	Q1 84
HC/HCT240*	Octal Inverting Buffer, 3-State	A
HC/HCT241*	Octal Buffer, 3-State	A
HC/HCT242*	Quad Inverting Transceiver, 3-State	Q1 84
HC/HCT243*	Quad Transceiver, 3-State	Q1 84
HC/HCT244*	Octal Buffer, 3-State	A
HC/HCT245*	Octal Transceiver, 3-State	A
HC/HCT251	8-Input Multiplexer, 3-State	A
HC/HCT253	Dual 4-Input Multiplexer, 3-State	A
HC/HCT257*	Quad 2-Input Multiplexer, 3-State	A
HC/HCT259	8-Bit Addressable Latch	Q2 84
HC/HCT273	Octal D-Type Flip-Flop with Clear, Positive-Edge Trigger	Q1 84
HC/HCT280	9-Bit Odd/Even Parity Generator/ Checker	A
HC/HCT297	Digital Phase-Locked Loop Filter	Q1 84
HC/HCT299	8-Bit Universal Shift Register, 3-State	Q1 84
HC/HCT354*	8-Input Multiplexer/Register, 3-State	Q2 84
HC/HCT356*	8-Input Multiplexer/Register, 3-State	Q2 84
HC/HCT365*	Hex Buffer, 3-State	Q3 84
HC/HCT366*	Hex Inverting Buffer, 3-State	Q1 84
HC/HCT367*	Hex Buffer, 3-State	Q1 84
HC/HCT368*	Hex Inverting Buffer, 3-State	Q1 84
HC/HCT373*	Octal Transparent Latch, 3-State	Q1 84
HC/HCT374*	Octal D-Type Flip-Flop, Positve-Edge Trigger, 3-State	A
HC/HCT377	Octal D-Type Flip-Flop with Data Enable, Positive-Edge Trigger	A
HC/HCT384	8-Bit Serial/Parallel Two's Complement Multiplier	P
HC/HCT390	Dual Decade Ripple Counter	Q1 84
HC/HCT393	Dual 4-Bit Binary Ripple Counter	A
HC/HCT423	Dual Retriggerable Monostable Multivibrator	Q2 84
HC/HCT533*	Octal Transparent Inverting Latch, 3-State	Q1 84
HC/HCT534*	Octal D-Type Inverting Flip-Flop, Positive-Edge Trigger, 3-Stage	A
HC/HCT540*	Octal Inverting Buffer, 3-State	Q1 84
HC/HCT541*	Octal Buffer, 3-State	Q1 84
HC/HCT563*	Octal Transparent Inverting Latch, 3-State	A

*Types with a Bus Driver Output Stage; A = Available; P = Planned; Q1 84 = 1st Quarter of 1984; Q2 84 = 2nd Quarter of 1984; Q3 84 = 3rd Quarter of 1984

HC/HCT PRODUCT GUIDE/AVAILABILITY

HIGH SPEED CMOS

DEVICE	DESCRIPTION	AVAIL-ABILITY
HC/HCT564*	Octal D-Type Inverting Flip-Flop, Positive-Edge Trigger, 3-State	Q1 84
HC/HCT573*	Octal Transparent Latch, 3-State	A
HC/HCT574*	Octal D-Type Flip-Flop, Positive-Edge Trigger, 3-State	Q2 84
HC/HCT640*	Octal Inverting Transceiver, 3-State	A
HC/HCT643*	Octal True/Inverting Transceiver, 3-State	A
HC/HCT646*	Octal Transceiver/Register, 3-State	P
HC/HCT648*	Octal Inverting Transceiver/Register, 3-State	P
HC/HCT670	4 × 4 Register File, 3-State	Q2 84
HC/HCT688	8-Bit Magnitude Comparator	A
HC/HCT4002	Dual 4 Input NOR Gate	Q2 84
HC/HCT4015	Dual 4-Bit Serial-In/Parallel-Out Shift Register	P
HC/HCT4016	Quad Bilateral Switch	Q3 84
HC/HCT4017	Johnson Decade Counter with 10 Decoded Outputs	Q1 84
HC/HCT4020	14-Stage Binary Counter	Q1 84
HC/HCT4024	7-Stage Binary Counter	Q3 84
HC/HCT4040	12-Stage Binary Counter	Q1 84
HC/HCT4046	Phase-Locked Loop with VCO	Q2 84
HC/HCT4049	Hex Inverting HIGH-to-LOW Level Filter	Q2 84
HC/HCT4050	Hex HIGH-to-LOW Level Shifter	Q2 84
HC/HCT4051	8-Channel Analog Multiplexer/Demultiplexer	Q2 84

DEVICE	DESCRIPTION	AVAIL-ABILITY
HC/HCT4052	Dual 4-Channel Analog Multiplexer/Demultiplexer	P
HC/HCT4053	Triple 2-Channel Analog Multiplexer/Demultiplexer	Q3 84
HC/HCT4060	14-Stage Ripple-Carry Binary Counter	A
HC/HCT4066	Quad Bilateral Switch	Q3 84
HC/HCT4067	16-Channel Analog Multiplexer/Demultiplexer	Q3 84
HC/HCT4075	Triple 3-Input OR Gate	Q1 84
HC/HCT4094	8-Stage Shift-and-Store Bus Register	Q3 84
HC/HCT4511	BCD to 7-Segment Latch/Decoder/Driver	Q3 84
HC/HCT4514	1-of-16 Decoder/Demultiplexer with Input Latches	Q3 84
HC/HCT4515	1-of-16 Decoder/Demultiplexer Input Latches	Q2 84
HC/HCT4518	Dual BCD Counter	Q2 84
HC/HCT4520	Dual 4-Bit Binary Counter	Q2 84
HC/HCT4538	Dual Retriggerable Precision Monostable Multivibrator	Q1 84
HC/HCT4543	BCD to 7-Segment Latch/Decoder/Driver for LCDs	Q4 84
HC/HCT40103	8-Bit Binary Down Counter	Q2 84
HC/HCT40104*	4-Bit Bidirectional Universal Shift Register	A
HC/HCT40105	4 Bits × 16 Words FIFO Register	Q1 84

*Types with a Bus Driver Output Stage; A = Available; P = Planned; Q1 84 = 1st Quarter of 1984; Q2 84 = 2nd Quarter of 1984; Q3 84 = 3rd Quarter of 1984

HIGH-SPEED CMOS PRODUCT IDENTIFICATION

PC 74 HC XXXXX P COMPLETE TYPE NUMBER; STANDARD TEMPERATURE RANGE

- P — PACKAGE CODE: P = PLASTIC, T = SO PACKAGE
- XXXXX — DEVICE NUMBER (UP TO 5 DIGITS)
- HC — HC = CMOS INPUT SWITCHING LEVELS, SUPPLY VOLTAGE RANGE 2 TO 6V, FULLY BUFFERED.
- HC — HCT = TTL INPUT SWITCHING LEVELS, SUPPLY VOLTAGE RANGE 4.5V TO 5.5V, FULLY BUFFERED.
- HC — HCU = CMOS INPUT SWITCHING LEVELS, SUPPLY VOLTAGE RANGE 2V TO 6V, UNBUFFERED (SINGLE-STAGE DEVICE).
- 74 — 74 = STANDARD TEMPERATURE RANGE: −40°C TO +85°C
- 74 — 54 = EXTENDED TEMPERATURE RANGE: −55°C TO +125°C (AVAILABLE 1985)
- PC — PC = FAMILY IDENTIFICATION (HIGH-SPEED CMOS)

HIGH-SPEED CMOS ORDERING INFORMATION

Plastic Device	PC74HCXXXPN* • PC74HCTXXXPN*
SO Package	PC74HCXXXTD* • PC74HCTXXXTD*

*Note: The suffix N or D does not appear on the part marking; it is used only for internal order entry.

© IC MASTER 1984

SO PACKAGE INFORMATION

INTRODUCTION

A surface-mounted device is an electronic device which, due to advances in packaging technology, is mounted on the surface of a circuit board instead of being inserted through plated-through holes drilled in the surface. SMDs are soldered directly to bonding pads on the board. In some cases, e.g., leadless chip carriers, they must be socketed.

Throughout the years there have been rapid advances in IC design and manufacturing resulting in faster, more dense, and more reliable die. IC packaging and PC board assembly technology has finally caught up, offering much smaller packages which reduce signal paths, resulting in lower capacitance and impedance. Surface-mounted PC boards are more dense and more reliable than their predecessors. Further, the automated assembly processes reduce process time, improve yields, and reduce board rework. These benefits add up to a better product at a lower price.

COMPARISON OF BASIC SMD PACKAGES

NAME	MATERIAL	SHAPE	LOCATION OF LEADS	LEAD* SPACING	LEAD CONFIGURATION	JEDEC REGISTRATION	SIGNETICS AVAILABILITY
Small Outline (SO)	Plastic	Rectangle	2 Sides	0.050 in.	Down and Out	Yes	Yes
Leaded Chip Carrier (PLCC)	Plastic	Square	4 Sides	0.050 in.	Down and Under/ J-Hook	Yes	Yes
Flatpack	Ceramic	Rectangle	2 Sides	0.050 in.	Straight out	Yes	Yes
Leadless Chip Carrier (Type C)	Ceramic	Square	4 Sides	0.050 in.	None	Yes	Yes

SO — THE WORLD'S SMALLEST PLASTIC DIP

As you can see below, there is very little difference between the assembly SO and a DIP. The major difference is that the SO is much smaller and has a different lead bend. Both DIPs and SO packages use the same materials and assembly technology.

SMALL OUTLINE (SO) PACKAGE

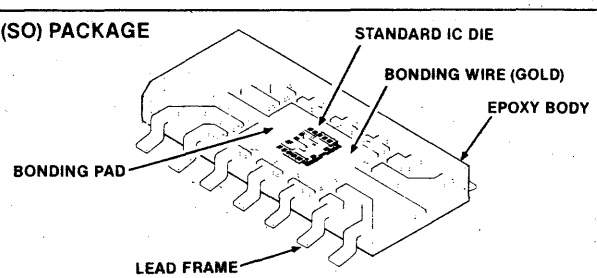

THERMAL CHARACTERISTICS

Junction Temperature (T_J)

Actual junction temperature can be calculated using the following:

$$T_J = (P_D \times R_{\theta JA}) + T_A$$

where:

T_J = Actual Junction Temperature
P_D = Power Dissipation (V_{CC} Max) × (I_{CC} Max)
$R_{\theta JA}$ = Thermal Resistance Junction to Ambient

Example:

A device is operated at +55°C with a power dissipation of 145 mW and a $R_{\theta JA}$ of 100°C/W.

$T_J = (0.145 \times 100) + 55$
$T_J = (15) + 55$
$T_J = 70°C$

Power Dissipation (P_D)

The maximum power consumption an integrated circuit can tolerate at a given operating ambient temperature can be found from the equation:

$$P_D(T_A) = \frac{T_J(Max) - T_A}{R_{\theta JA}(Typ)}$$

where:

$P_D(T_A)$ = Power dissipation allowable at a given operating ambient temperature. This must be ***greater*** than the sum of the products of the supply voltages and supply currents at the worst case operating condition.
$T_J(Max)$ = Maximum operating junction temperature.
T_A = Maximum desired operating ambient temperature.
$R_{\theta JA}$ = Typical thermal resistance junction to ambient.

Example:

The maximum allowable power dissipation for a 14-pin device mounted on a ceramic substrate with maximum junction temperature $T_J = 150°C$ and maximum temperature $T_A = 70°C$.

$$P_D(70°) = \frac{150° - 70°}{130°/W}$$

$$P_D(70°) = \frac{80}{130} = 615\ mW$$

SO PACKAGE INFORMATION

RELIABILITY

This section summarizes the activities undertaken by Reliability Engineering to evaluate and qualify the SO package. The evaluation demonstrated that the stress performance of the SO package is equivalent to the larger standard molded epoxy dual-in-line package in all aspects, and mounted, the package thermal resistance characteristics are exceptional considering the reduced size and mass of the package.

Evaluation Program

The evaluation/qualification program conducted in 1979 included three Analog products: LM311 Voltage Comparator, μA747 Dual Op Amp, and NE532 Dual Op Amp.

These devices encompass three wafer fabrication processes and both 8-pin and 14-pin package configurations.

All products were assembled on Alloy 42 lead frames, die attached utilizing conventional gold-silicon eutectic and molded in our standard Morton 410B epoxy Novalac compound. The devices were subjected to a series of accelerated stresses and tested to conventional data sheet parameters. Variables data were taken and drift analysis was performed.

The stress conditions employed were as follows:

- High Temperature Bias Life $T_A = 125°C$, $V_{CC} = \pm 15V$
- High Temperature Storage Life $T_A = 150°C$
- Temperature/Humidity Bias Life $T_A = 85°C$, RH = 85%, $V_{CC} = \pm 15V$
- Temperature/Humidity/Pressure (Pressure Cooker) $T_A = 121°C$, 15 PSIG 100%, Sat. Steam
- Thermal Shock (Liquid-to-Liquid) −65°C to 150°C

Program Results

The small dimensions of the SO package raised questions on its reliability, particularly in high humidity environments. The test results, however, compare favorably to the standard dual-in-line product. Our corporate requirements for product qualification were met or exceeded. The detailed results are presented in the Reliability Evaluation Results table.

SO packaging materials are being improved. As qualification evaluations are completed, results will be made available.

RELIABILITY EVALUATION RESULTS

RELIABILITY ENGINEERING PROJECT ID	SIGNETICS PRODUCT TYPE	STRESS	STRESS CONDITIONS	STRESS DURATION	CUMULATIVE RESULT	ANALYSIS
79070	LM311 (14-Lead "SO")	HTOL	125°C	2,000 hrs	1/49	1 @ 168 hrs: ball bond to trace short
		HTSL	150°C	2,000 hrs	0/50	
		Bias/ temperature/ humidity	85°C @ 85% RH $V_{CC} = 5.5V$	2,000 hrs	2/50	2 @ 2,000 hrs: internal metal corrosion
		Pressure pot	121°C 14 PSIG	432 hrs	2/51	1 @ 192 hrs: output leakage = 68 nA 1 @ 432 hrs: output leakage = 100 nA Both internal metal corrosion
		Thermal shock	−65°C to +150°C	1,000 ~	0/45	
790708	μA747 (14-Lead "SO")	HTOL	125°C to ± 15V	2,000 hrs	2/50	1 @ 168 hrs: $V_{OS} = 10$ mV, $V_{OS} = 7.4$ mV @ 2K hrs 1 @ 1,500 hrs: $V_{OS} = -80$ mV, $I_B = 8$ μA Suspect static damage
		HTSL	150°C	2,000 hrs	0/50	
		Bias/ temperature/ humidity	85°C @ 85% RH $V_{CC} = 5.5V$	2,000 hrs	1/50	V_{OS} rejects @ 500 hrs (−80 mV) Suspect static damage
		Pressure pot	121°C 15 PSIG	312 hrs	3/50	3 V_{OS} rejects @ 312 hrs (~8 mV)
		Thermal shock	−65°C to +150°C	1,000 ~	1/48	V_{OS} rejects @ 700~ (−170 mV, $I_B = 14$ μA) Suspect static damage
795003	NE532 (8-Lead "SO")	HTOL	150°C	2,000 hrs	0/45	To 500 hrs, 0/18 from 500 to 2,000 hrs (due to capacity limitations)
		HTSL	150°C	2,000 hrs	0/46	
		Bias/ temperature/ humidity	85°C @ 85% RH	2,000 hrs	2/49	1 @ 1,500, 1 @ 2,000 hrs Both output sink current failures due to corrosion
		Pressure pot	121°C 15 PSIG	456 hrs	1/43	Output sink current @ 288 hrs
		Thermal shock	−65°C to +150°C	1,000~	1/45	V_{OS} rejects @ 200~ (15 mV)

© IC MASTER 1984

SO PACKAGE INFORMATION

SO PACKAGE THERMAL DATA

PACKAGE TYPE	PACKAGE MOUNTING TECHNIQUE*	MAX. ALLOWABLE POWER DISSIPATION (mW) AT 25°C	MAX. ALLOWABLE POWER DISSIPATION (mW) AT 70°C	THERMAL RESISTANCE (θ_{JA}°C/Watt)	
				Average	Maximum
SO-14	PCB	658	421	190	225
	Ceramic	962	615	130	165
	Ceramic w/H.S.	1471	941	85	110
SO-16	PCB	862	551	145	170
	Ceramic	1250	800	100	125
	Ceramic w/H.S.	1923	1231	65	85
SO-16L	PCB	1250	800	100	140
	Ceramic	1743	1143	70	100
	Ceramic w/H.S.	2500	1600	50	65
SO-20	PCB	1471	941	85	115
	Ceramic	2273	1454	55	85
	Ceramic w/H.S.	3572	2286	35	55
SO-24	PCB	1563	1000	80	110
	Ceramic	2000	1600	50	80
	Ceramic w/H.S.	4167	2667	30	50

NOTES
1. PCB = Printed circuit board
2. Ceramic = Alumina substrate
3. Ceramic w/H.S. = Alumina substrate with heat sink and/or thermal compound

*Air gap between package and surface is 0.006-inch unless thermal compound is used.

PACKAGE AVAILABILITY

PREFERRED COMMERCIAL PACKAGES				CERAMIC PACKAGES	
Pin Count	SO 0.150 Wide	SOL 0.300 Wide	PLCC	Leadless Chip Carrier	Flatpack
8	Available	—	—	—	—
14	Available	—	—	—	Available
16	Available	Available	—	—	Available
20	—	Available	1984	Available	—
24	—	Available	—	Available	Available
28	—	Available	1984	Available	—
44	—	—	1983	Available	—
52	—	—	1984	Available	Available
68	—	—	Available	Available	Available
84	—	—	1984	—	—

TECHNOLOGIES AVAILABLE IN SIGNETICS SURFACE-MOUNTED PACKAGES

PACKAGE TYPE	PRODUCT TYPES	AVAILABILITY
SO-14	CMOS-4000, TTL-S, TTL-LS, TTL-Std.	Now
SO-14	High-Speed CMOS, TTL-Fast	1984
SO-16	CMOS-4000, TTL-S, TTL-LS, TTL-Std.	Now
SO-16	High-Speed CMOS, TTL-Fast	1984
SO-16L	TTL-S, TTL-LS, TTL-Std.	Now
SO-16L	TTL-Fast	1984
SO-20	TTL-S, TTL-LS	Now
SO-20	TTL-Fast	1984
SO-24	TTL-Fast	1984
SO-28	TTL-Fast	1984

SO PACKAGE INFORMATION

PACKAGE OUTLINE/JEDEC REGISTRATION

The following SO package outlines have been registered with the JC11.3 committee of the Joint Electronic Devices Engineering Council of the Electronics Industry Association:

SO-8	SO-20
SO-14	SO-24
SO-16	SO-28
SO-16L	

Outlines and dimensions for each package are shown below:

A. Dimensions and tolerancing per ANSI Y14.5-1973.
B. "T" is a reference datum.
C. "D" and "E" are reference datums and do not include mold flash or protrusions. Mold flash or protrusions shall not exceed 0.15mm (0.006 in.).
D. The chamfer on the body is used to designate pin 1. The beveled side to the left denotes lead number 1.
E. "L" is the length of terminal for soldering to a substrate.
F. Controlling dimension: Millimeter.

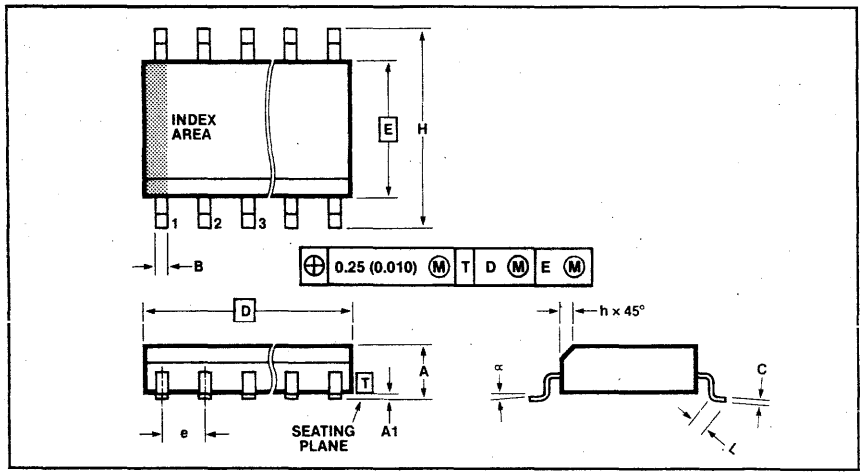

MILLIMETERS

Symbol	8-PIN		14-PIN		16-PIN		16L-PIN		20-PIN		24-PIN		28-PIN		Notes
	Min.	Max.	Min.	Max.	Min.	Max.	Min.	Max.	Min.	Max.	Min.	Max.	Min.	Max.	
A	1.35	1.75	1.35	1.75	1.25	1.75	2.35	2.65	2.35	2.65	2.35	2.65	2.35	2.65	
A_1	0.10	0.25	0.10	0.25	0.10	0.25	0.10	0.30	0.10	0.30	0.10	0.30	0.10	0.30	
B	0.35	0.48	0.35	0.48	0.35	0.48	0.35	0.49	0.35	0.49	0.35	0.49	0.35	0.49	
C	0.19	0.25	0.19	0.25	0.19	0.25	0.23	0.32	0.23	0.32	0.23	0.32	0.23	0.32	
D	4.80	5.00	8.55	8.75	9.80	10.00	10.1	10.5	12.6	13.0	15.2	15.6	17.7	18.1	C
E	3.80	4.00	3.80	4.00	3.80	4.00	7.4	7.6	7.4	7.6	7.4	7.6	7.4	7.6	C
e	1.27 BSC		1.27 BSC		1.27 BSC		1.27 BSC		1.27 BSC		1.27 BSC		1.27 BSC		
H	5.80	6.20	5.80	6.20	5.80	6.20	10.00	10.65	10.00	10.65	10.00	10.65	10.00	10.65	
L	0.40	1.27	0.40	1.27	0.40	1.27	0.40	1.27	0.40	1.270	0.40	1.270	0.40	1.270	E
α	0°	8°	0°	8°	0°	8°	0°	8°	0°	8°	0°	8°	0°	8°	
h	0.25	0.50	0.25	0.50	0.25	0.50	0.25	0.75	0.25	0.75	0.25	0.75	0.25	0.75	D

INCHES

Symbol	8-PIN		14-PIN		16-PIN		16L-PIN		20-PIN		24-PIN		28-PIN		Notes
	Min.	Max.	Min.	Max.	Min.	Max.	Min.	Max.	Min.	Max.	Min.	Max.	Min.	Max.	
A	0.053	0.069	0.053	0.069	0.053	0.069	0.093	0.104	0.093	0.104	0.093	0.104	0.093	0.104	
A_1	0.004	0.010	0.004	0.010	0.004	0.010	0.004	0.012	0.004	0.012	0.004	0.012	0.004	0.012	
B	0.014	0.019	0.014	0.019	0.014	0.019	0.014	0.019	0.014	0.019	0.014	0.019	0.014	0.019	
C	0.007	0.010	0.007	0.010	0.007	0.010	0.009	0.013	0.009	0.013	0.009	0.013	0.009	0.013	
D	0.189	0.197	0.337	0.344	0.386	0.394	0.398	0.413	0.496	0.512	0.598	0.614	0.647	0.713	C
E	0.150	0.157	0.150	0.157	0.150	0.157	0.2914	0.2992	0.2914	0.2992	0.2914	0.2992	0.2914	0.2992	C
e	0.050 BSC		0.050 BSC		0.050 BSC		0.050 BSC		0.050 BSC		0.050 BSC		0.050 BSC		
H	0.228	0.244	0.228	0.244	0.228	0.244	0.394	0.419	0.394	0.419	0.394	0.419	0.394	0.419	
h	0.010	0.02	0.010	0.02	0.010	0.02	0.010	0.02	0.010	0.02	0.010	0.02	0.010	0.02	D
L	0.016	0.050	0.016	0.050	0.016	0.050	0.016	0.050	0.016	0.050	0.016	0.050	0.016	0.050	E
α	0°	8°	0°	8°	0°	8°	0°	8°	0°	8°	0°	8°	0°	8°	

© IC MASTER 1984

SALES OFFICES

SIGNETICS HEADQUARTERS

811 East Argues Avenue
P.O. Box 409
Sunnyvale, California 94086
Phone: (408) 739-7700

ARIZONA
Phoenix
Phone: (602) 265-4444

CALIFORNIA
Canoga Park
Phone: (213) 340-1431

Cupertino
Phone: (408) 725-8100

Inglewood
Phone: (213) 670-1101

Irvine
Phone: (714) 833-8980
(213) 588-3281

San Diego
Phone: (619) 560-0242

COLORADO
Aurora
Phone: (303) 751-5011

CONNECTICUT
Danbury
Phone: (203) 748-3722

FLORIDA
Clearwater
Phone: (813) 796-7086

Ft. Lauderdale
Phone: (305) 486-6300

GEORGIA
Atlanta
Phone: (404) 953-0067

ILLINOIS
Schaumburg
Phone: (312) 843-7805

INDIANA
Kokomo
Phone: (317) 453-6462

KANSAS
Overland Park
Phone: (913) 341-8181

MARYLAND
Glen Burnie
Phone: (301) 787-0220

MASSACHUSETTS
Woburn
Phone: (617) 938-1000

MICHIGAN
Farmington Hills
Phone: (313) 476-1610

MINNESOTA
Edina
Phone: (612) 835-7455

NEW JERSEY
Parsippany
Phone: (201) 334-4405

NEW YORK
Liverpool
Phone: (315) 451-5470

Melville
Phone: (516) 752-0130

Wappingers Falls
Phone: (914) 297-4074

NORTH CAROLINA
Raleigh
Phone: (919) 851-2013

OHIO
Worthington
Phone: (614) 888-7143

PENNSYLVANIA
Horsham
Phone: (215) 443-5500

TENNESSEE
Greeneville
Phone: (615) 639-0251

TEXAS
Austin
Phone: (512) 458-2591

Richardson
Phone: (214) 644-3500

CANADA
SIGNETICS CANADA, LTD.
Etobicoke, Ontario
Phone: (416) 622-9314

Ottawa, Ontario
Tech-Trek, Ltd.
Phone: (613) 230-3927

REPRESENTATIVES

ALABAMA
Huntsville
Electronic Sales, Inc.
Phone: (205) 533-1735

ARIZONA
Thom Luke Sales, Inc.
Phone: (602) 941-1901

CALIFORNIA
Los Gatos
Sierra Technology
Phone: (714) 354-1626

San Diego
Mesa Engineering
Phone: (619) 278-8021

CANADA
Etobicoke
Tech-Trek, Ltd.
Phone: (416) 626-6676

Pointe Claire
Tech-Trek, Ltd.
Phone: (514) 697-3385

CONNECTICUT
Yalesville
Kanan Associates
Phone: (203) 265-2404

ILLINOIS
Schaumburg
Micro-Tex, Inc.
Phone: (312) 885-1131

IOWA
Marion
Rep. Associates Corp.
Phone: (319) 373-0152

KANSAS
Kansas City
B. C. Electronic Sales
Phone: (913) 342-1211

MASSACHUSETTS
Reading
Kanan Associates
Phone: (617) 944-8484

MICHIGAN
Bloomfield Hills
Enco Marketing
Phone: (313) 642-0203

MINNESOTA
Minneapolis
High Technology Sales
Phone: (612) 888-8088

MISSOURI
Bridgeton
B. C. Electronic Sales
Phone: (314) 291-1101

NEW JERSEY
East Hanover
Emtec Sales, Inc.
Phone: (201) 428-0600

NEW MEXICO
Albuquerque
Power Enterprises
Phone: (505) 298-1918

NEW YORK
Ithaca
Bob Dean, Inc.
Phone: (607) 257-1111

Melville
Emtec Sales, Inc.
Phone: (516) 752-1630

OREGON
Hillsboro
Western Technical Sales
Phone: (503) 640-4621

PENNSYLVANIA
Pittsburgh
Covert & Newman
Phone: (412) 531-2002

UTAH
Salt Lake City
Electrodyne
Phone: (801) 486-3801

WASHINGTON
Bellevue
Western Technical Sales
Phone: (206) 641-3900

Spokane
Western Technical Sales
Phone: (509) 922-7600

WISCONSIN
Waukesha
Micro-Tex, Inc.
Phone: (414) 542-5352

DISTRIBUTORS

ALABAMA
Huntsville
Hamilton/Avnet Electronics
Phone: (205) 837-7210
Pioneer Electronics
Phone: (205) 837-9300

ARIZONA
Phoenix
Hamilton/Avnet Electronics
Phone: (602) 231-5100
Wyle Distribution Group
Phone: (602) 249-2232

CALIFORNIA
Chatsworth
Anthem Electronics
Phone: (213) 700-1000
Arrow Electronics
Phone: (213) 701-7500

Costa Mesa
Avnet Electronics
Phone: (714) 754-6111
Hamilton Electro Sales
Phone: (714) 641-4100

Culver City
Hamilton/Avnet Electronics
Phone: (213) 558-2121
Hamilton/Avnet Electronics Military
Phone: (213) 558-2901

El Segundo
Wyle Distribution Group
Phone: (213) 322-8100

Irvine
Schweber Electronics
Phone: (714) 556-3880
Wyle Distribution Group
Phone: (714) 863-9953

Newport Beach
Arrow Electronics
Phone: (714) 851-8961

Sacramento
Hamilton/Avnet Electronics
Phone: (916) 920-3150

San Diego
Anthem Electronics
Phone: (619) 453-4871
Arrow Electronics
Phone (619) 565-4800
Hamilton/Avnet Electronics
Phone: (619) 571-7510
Wyle Distribution Group
Phone: (619) 565-9171

San Jose
Anthem Electronics Inc.
Phone: (408) 946-8000

Santa Clara
Schweber Electronics
Phone: (408) 748-4700
Wyle Distribution Group
Phone: (408) 727-2500

Sunnyvale
Arrow Electronics
Phone: (408) 745-6600
Hamilton/Avnet Electronics
Phone: (408) 743-3366

Tustin
Anthem Electronics
Phone: (714) 730-8000

Woodland Hills
Avnet Electronics
Phone: (213) 883-0000

CANADA
Calgary, Alberta
Hamilton/Avnet Electronics
Phone: (403) 230-3586
Zentronics
Phone: (403) 272-1021

Downsview, Ontario
Cesco Electronics
Phone: (416) 661-0220

Mississauga, Ontario
Hamilton/Avnet Electronics
Phone: (416) 677-7432
Zentronics
Phone: (416) 451-9600

Montreal, Quebec
Cesco Electronics
Phone: (514) 735-5511
Zentronics
Phone: (514) 735-5361

Ottawa, Ontario
Cesco Electronics
Phone: (613) 226-6903
Hamilton/Avnet Electronics
Phone: (613) 226-1700
Zentronics
Phone: (613) 238-6411

Quebec City
Cesco Electronics
Phone: (418) 524-4641

Vancouver
Zentronics
Phone: (604) 688-2533

Ville St. Laurent, Quebec
Hamilton/Avnet Electronics
Phone: (514) 331-6443

Waterloo
Zentronics
Phone: (519) 884-5700

Winnipeg
Zentronics
Phone: (204) 775-8661

COLORADO
Aurora
Arrow Electronics
Phone (303) 696-1111

Denver
Wyle Distribution Group
Phone: (303) 457-9953

Englewood
Hamilton/Avnet Electronics
Phone: (303) 740-1000

CONNECTICUT
Danbury
Hamilton/Avnet Electronics
Phone: (203) 797-2800
Schweber Electronics
Phone: (203) 792-3500

Wallingford
Arrow Electronics
Phone: (203) 265-7741

FLORIDA
Ft. Lauderdale
Arrow Electronics
Phone: (305) 776-7790
Hamilton/Avnet Electronics
Phone: (305) 971-2900

Hollywood
Schweber Electronics
Phone: (305) 927-0511

Palm Bay
Arrow Electronics
Phone: (305) 725-1480

St. Petersburg
Hamilton/Avnet Electronics
Phone: (813) 576-3930

GEORGIA
Atlanta
Schweber Electronics
Phone: (404) 449-9170

Norcross
Arrow Electronics
Phone: (404) 449-8252
Hamilton/Avnet Electronics
Phone: (404) 447-7500
Schweber Electronics
Phone: (404) 449-9170

ILLINOIS
Chicago
Bell Industries
Phone: (312) 982-9210

Elk Grove
Schweber Electronics
Phone: (312) 364-3750

Schaumburg
Arrow Electronics
Phone: (312) 397-3440

Bensenville
Hamilton/Avnet Electronics
Phone: (312) 860-7700

INDIANA
Indianapolis
Pioneer Electronics
Phone: (317) 849-7300
Arrow Electronics
Phone: (317) 243-9353
Hamilton/Avnet Electronics
Phone: (317) 844-9333

KANSAS
Overland Park
Hamilton/Avnet Electronics
Phone: (913) 888-8900

MARYLAND
Baltimore
Arrow Electronics
Phone: (301) 247-5200

Columbia
Hamilton/Avnet Electronics
Phone: (301) 995-3500

Gaithersburg
Pioneer Washington Electronics
Phone: (301) 948-0710
Schweber Electronics
Phone: (301) 840-5900

MASSACHUSETTS
Bedford
Schweber Electronics
Phone: (617) 275-5100

Burlington
Lionex Corp.
Phone: (617) 272-9400

Woburn
Arrow Electronics
Phone: (617) 933-8130
Hamilton/Avnet Electronics
Phone: (617) 273-7500

MICHIGAN
Ann Arbor
Arrow Electronics
Phone: (313) 971-8220

Grand Rapids
Hamilton/Avnet Electronics
Phone: (616) 243-8805

Livonia
Hamilton/Avnet Electronics
Phone: (313) 522-4700
Pioneer Electronics
Phone: (313) 525-1800
Schweber Electronics
Phone: (313) 525-8100

MINNESOTA
Eden Prairie
Schweber Electronics
Phone: (612) 941-5280

Edina
Arrow Electronics
Phone: (612) 830-1800

Minneapolis
Arrow Electronics
Phone: (612) 830-1800
Hamilton/Avnet Electronics
Phone: (612) 932-0600

Minnetonka
Hamilton/Avnet Electronics
Phone: (612) 932-0666

MISSOURI
Earth City
Hamilton/Avnet Electronics
Phone: (314) 344-1200

St. Louis
Arrow Electronics
Phone: (314) 567-6888

NEW HAMPSHIRE
Manchester
Arrow Electronics
Phone: (603) 668-6968

NEW JERSEY
Cherry Hill
Hamilton/Avnet Electronics
Phone: (609) 424-0100

Fairfield
Arrow Electronics
Phone: (201) 575-5300
Hamilton/Avnet Electronics
Phone: (201) 575-3390
Lionex Corporation
Phone: (201) 227-7960
Schweber Electronics
Phone: (201) 227-7880

Moorestown
Arrow Electronics
Phone: (609) 235-1900

NEW MEXICO
Albuquerque
Hamilton/Avnet Electronics
Phone: (505) 765-1500
Arrow Electronics
Phone: (505) 243-4566

NEW YORK
Buffalo
Summit Distributors
Phone: (716) 887-2800

East Syracuse
Arrow Electronics
Phone: (315) 652-1000
Hamilton/Avnet Electronics
Phone: (315) 437-2642

Hauppauge, L.I.
Arrow Electronics
Phone: (516) 231-1000
Lionex Corp.
Phone: (516) 273-1660

Liverpool
Arrow Electronics
Phone: (315) 652-1000

Melville
Hamilton/Avnet Electronics
Phone: (516) 454-6012

Rochester
Arrow Electronics
Phone: (716) 275-0300
Hamilton/Avnet Electronics
Phone: (716) 475-9130
Schweber Electronics
Phone: (716) 424-2222

Westbury, L.I.
Schweber Electronics
Phone: (516) 334-7474

NORTH CAROLINA
Charlotte
Pioneer Electronics
Phone: (704) 527-8188

Raleigh
Arrow Electronics
Phone: (919) 876-3132
Hamilton/Avnet Electronics
Phone: (919) 878-0819
Schweber Electronics
Phone: (919) 876-0000

Winston-Salem
Arrow Electronics
Phone: (919) 725-8711

OHIO
Beachwood
Schweber Electronics
Phone: (216) 464-2970

Cleveland
Hamilton/Avnet Electronics
Phone: (216) 831-3500
Pioneer Electronics
Phone: (216) 587-3600

Centerville
Arrow Electronics
Phone: (513) 435-5563

Dayton
Hamilton/Avnet Electronics
Phone: (513) 433-0610
Pioneer Standard Electronics
Phone: (513) 236-9900

Solon
Arrow Electronics
Phone: (216) 248-3990

OKLAHOMA
Tulsa
Quality Components
Phone: (918) 664-8812

OREGON
Hillsboro
Wyle Distribution Group
Phone: (503) 640-6000

Lake Oswego
Hamilton/Avnet Electronics
Phone: (503) 635-8831

PENNSLYVANIA
Horsham
Schweber Electronics
Phone: (215) 441-0600

Pittsburgh
Arrow Electronics
Phone: (412) 856-7000
Pioneer/Pittsburgh
Phone: (412) 782-2300

TEXAS
Austin
Arrow Electronics
Phone: (512) 835-4180
Hamilton/Avnet Electronics
Phone: (512) 837-8911
Quality Components
Phone: (512) 835-0220

Dallas
Arrow Electronics
Phone: (214) 386-7500
Hamilton/Avnet Electronics
Phone: (214) 659-4111
Quality Components
Phone: (214) 387-4949
Schweber Electronics
Phone: (214) 661-5010

Houston
Arrow Electronics
Phone: (713) 530-4700
Hamilton/Avnet Electronics
Phone: (713) 780-1771
Quality Components
Phone: (713) 772-7100
Schweber Electronics
Phone: (713) 784-3600

UTAH
Salt Lake City
Hamilton/Avnet Electronics
Phone: (801) 972-4300
Wyle Distribution Group
Phone: (801) 974-9953

WASHINGTON
Bellevue
Arrow Electronics
Phone: (206) 643-4800
Hamilton/Avnet Electronics
Phone: (206) 453-5844
Wyle Distribution Group
Phone: (206) 453-8300

WISCONSIN
New Berlin
Hamilton/Avnet Electronics
Phone: (414) 784-4510

Oak Creek
Arrow Electronics
Phone: (414) 764-6600

Waukesha
Bell Industries
Phone: (414) 784-0235

FOR SIGNETICS PRODUCTS WORLDWIDE:

ARGENTINA
Philips Argentina S.A.
Buenos Aires
Phone: 541-7141

AUSTRALIA
Philips Industries Holdings Ltd.
Lane-Cove, N.S.W.
Phone: 61-2-427-0888

AUSTRIA
Osterrichsche Philips Bauelemente
Wien
Phone: 43-222-93-26-2

BELGIUM
N. V. Philips & MBLE
Bruxelles
Phone: 32-02-242-7400

BRAZIL
Ibrape
Sao Paulo
Phone: 55-011-211-2600

CHILE
Philips Chilena S.A.
Santiago
Phone: 56-2-39-4001

COLOMBIA
Sadape S.A.
Bogota D.E.
Phone: 600 600

DENMARK
Miniwatt A/S
Kobenhavn N.V.
Phone: 45-01-69-1622

FINLAND
Oy Philips Ab
Helsinki
Phone: 358-1-7271

FRANCE
R.T.C. La Radiotechnique-Compelec
Paris
Phone: 33-1-355-4499

GERMANY
Valvo
Hamburg
Phone: 49-40-3296-19

GREECE
Philips S.A. Hellenique
Athens
Phone: 9215111

HONG KONG
Philips Hong Kong, Ltd.
Kwai Chung
Phone: 852-0-245121

INDIA
Philips India & Elect. Ltd.
Bombay
Phone: 91-22-295144

INDONESIA
P.T. Philips-Ralin Electronics
Jakarta
Phone: 716 131

IRELAND
Philips Electrical Ltd.
Dublin
Phone: 353-1-69-3355

ISRAEL
Rapac Electronics, Ltd.
Tel Aviv
Phone: 972-3-477115

ITALY
Philips S.p.A.
Milano
Phone: 39-2-6994

JAPAN
Signetics Japan, Ltd.
Tokyo
Phone: 813-230-1521
Osaka
Phone: 816-304-6171

KOREA
Philips Elect. Korea Ltd.
Seoul
Phone: 794-4202

MALAYSIA
Philips Malaysia Sdn. Berhad
Kuala Lumpur
Phone: 77 44 11

MEXICO
Electronica S.A. de C.V.
Mexico D.F.
Phone: 52-721-61300

NETHERLANDS
Philips Nederland B.V.
Eindhoven
Phone: 31-40-79-3333

NEW ZEALAND
Philips Electrical Ind. Ltd.
Auckland
Phone: 64-9-605914

NORWAY
Norsk A/S Philips
Oslo
Phone: 47-2-680200

PERU
Cadesa
Lima
Phone: 326070

PHILIPPINES
Philips Industrial Dev., Inc.
Makati-Rizal
Phone: 868951

PORTUGAL
Philips Portuguesa SARL
Lisboa
Phone: 351-19-68-3121

SINGAPORE
Philips Project Dev. Pte., Ltd.
Singapore
Phone: 65-253-8811

SOUTH AFRICA
E.D.A.C. (PTY), Ltd.
Johannesburg
Phone: 27-11-614-2362

SPAIN
Miniwatt S.A.
Barcelona
Phone: 301 63 12

SWEDEN
A.B. Elcoma
Stockholm
Phone: 46-08-67-9780

SWITZERLAND
Philips A.G.
Zurich
Phone: 41-01-988-2211

TAIWAN
Philips Taiwan, Ltd.
Taipei
Phone: 886-2-563-1717

THAILAND
Philips Electrical Co. of Thailand Ltd.
Bangkok
Phone: 233-6330-9

TURKEY
Turk Philips
Ticaret A.S.
Istanbul
Phone: 43 59 10

UNITED KINGDOM
Mullard, Ltd.
London
Phone: 44-01-580-6633

UNITED STATES
Signetics International Corp.
Sunnyvale, California
Phone: (408) 739-7700

URUGUAY
Luzilectron S.A.
Montevideo
Phone: 91 43 21

VENEZUELA
Industrias Venezolanas Philips S.A.
Caracas
Phone: 58-2-36-0511

Don't Miss the
IC Updates

These quarterly updates keep your IC Master current the year 'round.

Look for them in Integrated Circuits Magazine

Bipolar Digital Logic Circuits Product Guide

SSI, MSI, and LSI Circuits Microprocessors and Support Circuits

TEXAS INSTRUMENTS

DIGITAL

Texas Instruments

© IC MASTER 1984

NUMERICAL INDEX
ADVANCED LOW-POWER SCHOTTKY AND ADVANCED SCHOTTKY CIRCUITS

DEVICE	FUNCTION	AVAILABILITY
ALS00A	Quad 2-Input NAND Gates	NOW
AS00		NOW
ALS01	Quad 2-Input NAND Gates with O-C outputs	NOW
ALS02	Quad 2-Input NOR Gates	NOW
AS02		NOW
ALS03A	Quad 2-Input NAND Gates with O-C outputs	NOW
ALS04A	Hex Inverters	NOW
AS04		NOW
ALS05A	Hex Inverters with O-C outputs	NOW
ALS08	Quad 2-Input AND Gates	NOW
AS08		NOW
ALS09	Quad 2-Input AND Gates with O-C outputs	NOW
ALS10	Triple 3-Input NAND Gates	NOW
AS10		NOW
ALS11	Triple 3-Input AND Gates	NOW
AS11		NOW
ALS12	Triple 3-Input NAND Gates with O-C outputs	NOW
ALS15	Triple 3-Input AND Gates with O-C outputs	NOW
ALS20A	Dual 4-Input NAND Gates	NOW
AS20		NOW
ALS21	Dual 4-Input AND Gates	NOW
AS21		NOW
ALS22A	Dual 4-Input NAND Gates with O-C outputs	NOW
ALS27	Triple 3-Input NOR Gates	NOW
AS27		NOW
ALS28A	Quad 2-Input NOR Buffers	NOW
ALS30	8-Input NAND Gates	NOW
AS30		NOW
ALS32	Quad 2-Input OR Gates	NOW
AS32		NOW
ALS33A	Quad 2-Input NOR Buffers with O-C outputs	NOW
ALS34	Non-Inverters	▲
AS34		NOW
ALS35	Non-Inverters with O-C outputs	▲
ALS37A	Quad 2-Input NAND Buffers	NOW
ALS38A	Quad 2-Input NAND Buffers with O-C outputs	NOW
ALS40A	Dual 4-Input NAND Buffers	NOW
ALS74	Dual D-Type Pos-edge-triggered F/F	NOW
AS74		NOW
ALS86	Quad 2-Input Exclusive-OR Gates	▲
AS95	4-Bit Shift Registers	▲
ALS109	Dual J,$\overline{K}$ Pos-edge-triggered F/F	NOW
AS109		NOW
ALS112A	Dual J,K Neg-edge-triggered F/F	NOW
AS112		▲
ALS113A	Dual J,K Neg-edge-triggered F/F	NOW
AS113		▲
ALS114A	Dual J,K Neg-edge-triggered F/F	NOW
AS114		▲

▲ Planned for future announcement. Contact TI field sales office or authorized TI distributor for status.

NUMERICAL INDEX
ADVANCED LOW-POWER SCHOTTKY AND ADVANCED SCHOTTKY CIRCUITS

DEVICE	FUNCTION	AVAILABILITY
ALS131	3 - to 8-Line Decoders/Demultiplexers with Address Latches	NOW
AS131		▲
ALS133	13-Input NAND Gates	NOW
ALS137	3 - to - 8 Line Decoders/Demultiplexers with Address Latches	NOW
AS137		▲
ALS138	3 - to - 8 Line Decoders/Demultiplexers	NOW
AS138		▲
ALS139	Dual 2 - to - 4 Line Decoders/Demultiplexers	▲
AS139		▲
AS150	1 - of - 16 Data Selectors/Multiplexers	▲
ALS151	1 - of - 8 Data Selectors/Multiplexers	NOW
AS151		NOW
ALS153	Dual 4-Line to 1-Line Data Selectors/Multiplexers	NOW
AS153		NOW
ALS157	Quad 2-to-1 Line Data Selectors/Multiplexers Non-Inv. Outputs	NOW
AS157		NOW
ALS158	Quad 2-to-1 Line Data Selectors/Multiplexers Inv. Outputs	NOW
AS158		NOW
ALS160A	Syn. 4-Bit Counters, Decade, Direct Clear	NOW
AS160		▲
ALS161A	Syn. 4-Bit Counters, Binary, Direct Clear	NOW
AS161		▲
ALS162A	Syn. 4-Bit Counters, Decade, Syn. Clear	NOW
AS162		▲
ALS163A	Syn. 4-Bit Counters, Binary, Syn. Clear	NOW
AS163		▲
ALS164	8-Bit Parallel Output Serial Shift Registers	▲
ALS165	Parallel-Load 8-Bit Shift Reg. w/Comp. O/P	▲
ALS166	8-Bit Shift Registers	▲
ALS168A	4-Bit Up/Down Syn. Counters, Decade	NOW
AS168		▲
ALS169A	4-Bit Up/Down Syn. Counters, Binary	NOW
AS169		▲
ALS174	Hex D-Type Flip-Flops	NOW
AS174		NOW
ALS175	Quad D-Type Flip-Flops	NOW
AS175		NOW
AS181A	Arithmetic Logic Units/Function Generators	NOW
AS182	Look-Ahead Carry Generators	▲
ALS190	Syn. Up/Down Counters, BCD	NOW
ALS191	Syn. Up/Down Counters, Binary	NOW
ALS192	Syn. Up/Down Counters, BCD with Clear	NOW
ALS193	Syn. Up/Down Counters, Binary with Clear	NOW
AS194	4-Bit Bidirec. Universal Shift Reg.	▲
AS195	4-Bit Parallel-Access Shift Reg.	▲
AS230	Octal Buffers/Line Drivers w/3-State O/P	NOW
AS231	Octal Buffers/Line Drivers w/3-State O/P	NOW
ALS240A	Octal Buffers/Line Drivers/Line Receivers	NOW
AS240		NOW

▲ Planned for future announcement. Contact TI field sales office or authorized TI distributor for status.

Copyright © 1983 by Texas Instruments Incorporated.

TEXAS INSTRUMENTS
POST OFFICE BOX 225012 • DALLAS, TEXAS 75265

NUMERICAL INDEX
ADVANCED LOW-POWER SCHOTTKY AND ADVANCED SCHOTTKY CIRCUITS

DEVICE	FUNCTION	AVAILABILITY
ALS241A	Octal Buffers/Line Drivers/Line Receivers	NOW
AS241		NOW
ALS242A	Quad Bus Transceivers	NOW
AS242		NOW
ALS243	Quad Bus Transceivers	NOW
AS243		NOW
ALS244A	Octal Buffers/Line Drivers/Line Receivers	NOW
AS244		NOW
ALS245A	Octal Bus Transceivers	NOW
AS245		▲
ALS251	Data Selectors/Multiplexers	NOW
AS251		▲
ALS253	Dual Data Selectors/Multiplexers	NOW
AS253		NOW
ALS257	Quad Data Selectors/Multiplexers	NOW
AS257		NOW
ALS258	Quad Data Selectors/Multiplexers	NOW
AS258		NOW
ALS259	8-Bit Addressable Latches	▲
AS264	Look-Ahead Carry Generator	▲
ALS273	Octal D-Type Flip-Flops	NOW
AS280	9-Bit Odd/Even Parity Gen./Checkers	▲
AS282	Look Ahead Carry Gen. w/Select. Carry I/P	▲
AS286	9-Bit Parity Gen./Checker w/Parity I/O Port	▲
AS298	Quad 2-Input Multiplexers with Storage	▲
ALS299	8-Bit Universal Shift/Storage Registers	NOW
AS299		▲
ALS323	8-Bit Universal Shift/Storage Registers	NOW
AS323		▲
ALS352	Dual 4-to-1 Line Data Selectors/Multiplexers	NOW
AS352		NOW
ALS353	Dual 4-to-1 Line Data Selectors/Multiplexers	NOW
AS353		NOW
ALS365	Hex Bus Drivers	▲
ALS366	Hex Bus Drivers	▲
ALS367	Hex Bus Drivers	▲
ALS368	Hex Bus Drivers	▲
ALS373	Octal D-Type Latches	NOW
AS373		NOW
ALS374	Octal D-Type Flip-Flops	NOW
AS374		NOW
AS395	4-Bit Cascadable Shift Register	▲
ALS465	Octal Buffers	NOW
ALS466	Octal Buffers	NOW
ALS467	Octal Buffers	NOW
ALS468	Octal Buffers	NOW
ALS518	8-Bit Identity Comparators	NOW
ALS519	8-Bit Identity Comparators	NOW
ALS520	8-Bit Identity Comparators	NOW

▲ Planned for future announcement. Contact TI field sales office or authorized TI distributor for status.

NUMERICAL INDEX
ADVANCED LOW-POWER SCHOTTKY AND ADVANCED SCHOTTKY CIRCUITS

DEVICE	FUNCTION	AVAILABILITY
ALS521	8-Bit Identity Comparators	NOW
ALS522	8-Bit Identity Comparators	NOW
ALS526	Programmable Comparator	▲
ALS527	Programmable Comparator	▲
ALS528	Programmable Comparator	▲
ALS533	Octal D-Type Transparent Latches	NOW
AS533		NOW
ALS534	Octal D-Type Edge-Triggered Flip-Flops	NOW
AS534		NOW
ALS538	3-to-8 Line Decoders/Demultiplexers	▲
ALS539	Dual 2-to-4 Line Decoders/Demultiplexers	▲
ALS540	Octal Buffers and Line Drivers	▲
ALS541	Octal Buffers and Line Drivers	▲
ALS560A	Syn. 4-Bit Counters, Decade	NOW
ALS561A	Syn. 4-Bit Counters, Binary	NOW
ALS563	Octal D-Type Transparent Latches	NOW
ALS564	Octal D-Type Edge-Triggered Flip-Flops	NOW
ALS568A	Syn. 4-Bit Up/Down Counters, Decade	NOW
ALS569A	Syn. 4-Bit Up/Down Counters, Binary	NOW
ALS573	Octal D-Type Transparent Latches	NOW
AS573		NOW
ALS574	Octal D-Type Edge Triggered Flip-Flops	NOW
AS574		NOW
ALS575	Octal D-Type Edge-Triggered Flip-Flops	NOW
AS575		NOW
ALS576	Octal D-Type Edge-Triggered Flip-Flops	NOW
AS576		NOW
ALS577	Octal D-Type Edge-Triggered Flip-Flops	NOW
AS577		NOW
ALS580	Octal D-Type Transparent Latches	NOW
AS580		NOW
ALS620	Octal Bus Transceivers	NOW
AS620		NOW
ALS621	Octal Bus Transceivers	NOW
AS621		NOW
ALS622	Octal Bus Transceivers	NOW
AS622		▲
ALS623	Octal Bus Transceivers	NOW
AS623		▲
ALS632	32-Bit EDAC Circuits	NOW
ALS633	32-Bit EDAC Circuits	▲
ALS634	32-Bit EDAC Circuits	▲
ALS635	32-Bit EDAC Circuits	▲
ALS638	Octal Bus Transceivers	NOW
AS638		▲
ALS639	Octal Bus Transceivers	NOW
AS639		▲
ALS640A	Octal Bus Transceivers	NOW
AS640		NOW

▲ Planned for future announcement. Contact TI field sales office or authorized TI distributor for status.

Copyright © 1983 by Texas Instruments Incorporated.

TEXAS INSTRUMENTS
POST OFFICE BOX 225012 • DALLAS, TEXAS 75265

NUMERICAL INDEX
ADVANCED LOW-POWER SCHOTTKY AND ADVANCED SCHOTTKY CIRCUITS

DEVICE	FUNCTION	AVAILABILITY
ALS641	Octal Bus Transceivers	NOW
AS641		NOW
ALS642	Octal Bus Transceivers	NOW
AS642		NOW
ALS643	Octal Bus Transceivers	NOW
AS643		▲
ALS644	Octal Bus Transceivers	NOW
AS644		NOW
ALS645A	Octal Bus Transceivers	NOW
AS645		NOW
ALS646	Octal Bus Transceivers and Registers	▲
AS646		▲
ALS647	Octal Bus Transceivers and Registers	▲
ALS648	Octal Bus Transceivers and Registers	▲
AS648		▲
ALS649	Octal Bus Transceivers and Registers	▲
ALS651	Octal Bus Transceivers and Registers	▲
AS651		▲
ALS652	Octal Bus Transceivers and Registers	▲
AS652		▲
ALS653	Octal Bus Transceivers and Registers	▲
ALS654	Octal Bus Transceivers and Registers	▲
ALS677	Address Comparators	NOW
ALS678	Address Comparators	▲
ALS679	Address Comparators	NOW
ALS680	Address Comparators	▲
ALS688	8-Bit Identity Comparators	NOW
ALS689	8-Bit Identity Comparators	NOW
AS756	Octal Bfr. /Line Dr./Line Rcvr. w/O-C O/P	▲
AS757	Octal Bfr. /Line Dr./Line Rcvr. w/O-C O/P	▲
AS758	Quad Bus. Transceivers with O-C Outputs	▲
AS759	Quad Bus Transceivers with O-C Outputs	▲
AS760	Octal Bfr. /Line Dr./Line Rcvr. w/O-C O/P	▲
AS762	Octal Buffers/Line Drivers with O-C Outputs	▲
AS763	Octal Buffers/Line Drivers with O-C Outputs	▲
AS800	Triple 4-Input AND/NAND Drivers	▲
AS802	Triple 4-Input OR/NOR Drivers	▲
ALS804	Hex 2-Input NAND Drivers	NOW
AS804A		NOW
ALS805	HEX 2-Input NOR Drivers	NOW
AS805A		NOW
ALS808	Hex 2-Input AND Drivers	NOW
AS808A		NOW
AS821	10-Bit Parallel Register, Non-Inverting	▲
AS822	10-Bit Parallel Register, Inverting	▲
AS823	9-Bit Parallel Register, Non-Inverting	▲
AS824	9-Bit Parallel Register, Inverting	▲
AS825	8-Bit Parallel Register, Non-Inverting	▲
AS826	8-Bit Parallel Register, Inverting	▲

▲ Planned for future announcement. Contact TI field sales office or authorized TI distributor for status.

NUMERICAL INDEX
ADVANCED LOW-POWER SCHOTTKY AND ADVANCED SCHOTTKY CIRCUITS

DEVICE	FUNCTION	AVAILABILITY
ALS832	Hex 2-Input OR Drivers	NOW
AS832A		NOW
AS841	10-Bit Parallel Latches, Non-Inverting	▲
AS842	10-Bit Parallel Latches, Inverting	▲
AS843	9-Bit Parallel Latches, Non-Inverting	▲
AS844	9-Bit Parallel Latches, Inverting	▲
AS845	8-Bit Parallel Latches, Non-Inverting	▲
AS846	8-Bit Parallel Latches, Inverting	▲
AS850	1-of-16 Data Selectors/Multiplexers	▲
AS851	1-of-16 Data Selectors/Multiplexers	▲
AS852	8-Bit Universal Transceiver Port Controller	▲
AS856	8-Bit Universal Transceiver Port Controller	▲
ALS857	Hex 2-to-1 Universal Multiplexers	NOW
AS857		NOW
AS866	8-Bit Magnitude Comparators	NOW
AS867	Syn. 8-Bit Up/Down Counters, Asyn. Clear	NOW
AS869	Syn. 8-Bit Up/Down Counters, Syn. Clear	NOW
AS870	Dual 16-by-4 Register Files	NOW
AS871	Dual 16-by-4 Register Files	▲
ALS873	Dual 4-Bit D-Type Latches	NOW
AS873		NOW
ALS874	Dual 4-Bit D-Type Edge-Triggered Flip-Flops	NOW
AS874		NOW
ALS876	Dual 4-Bit D-Type Edge-Triggered Flip-Flops	NOW
AS876		NOW
AS877	8-Bit Universal Transceivers Port Controllers	▲
ALS878	Dual 4-Bit D-Type Edge-Triggered Flip-Flops	NOW
AS878		NOW
ALS879	Dual 4-Bit D-Type Edge-Triggered Flip-Flops	NOW
AS879		NOW
ALS880	Dual 4-Bit D-Type Latches	NOW
AS880		NOW
AS881A	Arithmetic Logic Units/Function Generators	NOW
AS882	32-Bit Look-Ahead Carry Generators	NOW
AS885	8-Bit Magnitude Comparators	NOW
AS888	8-Bit Processor Slices	▲
AS889	8-Bit Processor Slices	▲
AS890	Microsequencers	▲
AS891	Microsequencers	▲
AS897	16-Bit Expandable Barrel Shifter	▲
ALS1000A	Quad 2-Input NAND Buffers/Drivers	NOW
AS1000		NOW
ALS1002A	Quad 2-Input NOR Buffers	NOW
ALS1003A	Quad 2-Input NAND Buffers with O-C O/P	NOW
ALS1004	Hex Inverting Drivers	NOW
AS1004		NOW
ALS1005	Hex Inverting Buffers with O-C Outputs	NOW
ALS1008A	Quad 2-Input AND Buffers/Drivers	NOW
AS1008		NOW

▲ Planned for future announcement. Contact TI field sales office or authorized TI distributor for status.

Copyright © 1983 by Texas Instruments Incorporated.

TEXAS INSTRUMENTS
POST OFFICE BOX 225012 • DALLAS, TEXAS 75265

NUMERICAL INDEX
ADVANCED LOW-POWER SCHOTTKY AND ADVANCED SCHOTTKY CIRCUITS

DEVICE	FUNCTION	AVAILABILITY
ALS1010A	Triple 3-Input NAND Buffers	NOW
ALS1011A	Triple 3-Input AND Buffers	NOW
ALS1020A	Dual 4-Input NAND Buffers	NOW
ALS1032A	Quad 2-Input OR Buffers/Drivers	NOW
AS1032		NOW
ALS1034	Hex Drivers	NOW
AS1034		NOW
ALS1035	Hex Buffers with O-C Outputs	NOW
AS1036	Quad 2-Input NOR Drivers	NOW
ALS1240	Octal Buffers and Line Drivers	▲
ALS1241	Octal Buffers and Line Drivers	▲
ALS1242	Quad Bus Transceivers	▲
ALS1243	Quad Bus Transceivers	▲
ALS1244A	Octal Buffers/Line Drivers/Line Receivers	NOW
ALS1245	Octal Bus Transceivers	NOW
ALS1616	16 X 16 Bit Multimode Multipliers	▲
ALS1620	Octal Bus Transceivers	▲
ALS1621	Octal Bus Transceivers	▲
ALS1622	Octal Bus Transceivers	▲
ALS1623	Octal Bus Transceivers	▲
ALS1638	Octal Bus Transceivers	▲
ALS1639	Octal Bus Transceivers	▲
ALS1640A	Octal Bus Transceivers	NOW
ALS1641	Octal Bus Transceivers	▲
ALS1642	Octal Bus Transceivers	▲
ALS1643	Octal Bus Transceivers	▲
ALS1644	Octal Bus Transceivers	▲
ALS1645	Octal Bus Transceivers	NOW
AS2620	Octal Bus Transceivers/MOS Drivers	▲
AS2623	Octal Bus Transceivers/MOS Drivers	▲
AS2640	Octal Bus Transceivers/MOS Drivers	NOW
AS2643	Octal Bus Transceivers/MOS Drivers	▲
AS2645	Octal Bus Transceivers/MOS Drivers	▲
ALS8003	Dual 2-Input NAND Gates	NOW

▲ Planned for future announcement. Contact TI field sales office or authorized TI distributor for status.

NUMERICAL INDEX
FIELD PROGRAMMABLE LOGIC ARRAYS

DEVICE	FUNCTION	AVAILABILITY
PL16L8	FPL Fixed-OR Arrays	NOW
PL16R4		NOW
PL16R6		NOW
PL16R8		NOW
PL20L8	FPL Fixed-OR Arrays	▲
PL20R4		▲
PL20R6		▲
PL20R8		▲
PL839	14 X 32 X 6 Field Programmable Logic Arrays	▲
PL840	14 X 32 X 6 Field Programmable Logic Arrays	▲
PLR19L8	FPL Registered-Input Fixed-OR Arrays	▲
PLR19R4		▲
PLR19R6		▲
PLR19R8		▲
PLT19L8	FPL Latched-Input Fixed-OR Arrays	▲
PLT19R4		▲
PLT19R6		▲
PLT19R8		▲

▲ Planned for future announcement. Contact TI field sales office or authorized TI distributor for status.

Copyright © 1983 by Texas Instruments Incorporated.

TEXAS INSTRUMENTS
POST OFFICE BOX 225012 • DALLAS, TEXAS 75265

00

QUADRUPLE 2-INPUT POSITIVE-NAND GATES

typical performance

TYPE	POWER	DELAY
'00	10 mW	10 ns
'ALS00A	1.25 mW	3.5 ns
'AS00	8 mW	3 ns
'H00	22 mW	6 ns
'L00	1 mW	33 ns
'LS00	2 mW	9.5 ns
'S00	19 mW	3 ns

SN5400 (J,FH) SN7400 (J,N)
SN54ALS00A (J,FH) SN74ALS00A (N,FN)
SN54AS00 (J,FH) SN74AS00 (N,FN)
SN54H00 (J) SN74H00 (J,N)
SN54L00 (J)
SN54LS00 (J,FH) SN74LS00 (J,N,FN)
SN54S00 (J,FH) SN74S00 (J,N,FN)

logic symbol†

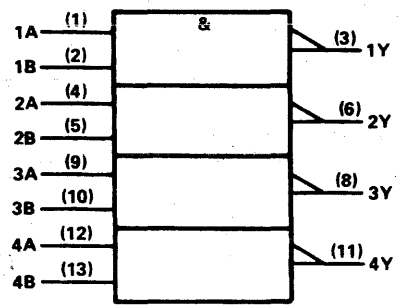

positive logic: $Y = \overline{AB}$

pin assignments

J, N PACKAGES				FH, FN PACKAGES			
1	1A	8	3Y	1	nc	11	nc
2	1B	9	3A	2	1A	12	3Y
3	1Y	10	3B	3	1B	13	3A
4	2A	11	4Y	4	1Y	14	3B
5	2B	12	4A	5	nc	15	nc
6	2Y	13	4B	6	2A	16	4Y
7	GND	14	V_{CC}	7	nc	17	nc
				8	2B	18	4A
				9	2Y	19	4B
				10	GND	20	V_{CC}

01

QUADRUPLE 2-INPUT POSITIVE-NAND GATES WITH OPEN-COLLECTOR OUTPUTS

typical performance

TYPE	POWER	DELAY
'01	10 mW	22 ns
'ALS01	1.28 mW	16 ns
'H01	22 mW	8 ns
'LS01	2 mW	16 ns

SN5401 (J,FH) SN7401 (J,N)
SN54ALS01 (J,FH) SN74ALS01 (N,FN)
SN54H01 (J) SN74H01 (J,N)
SN54LS01 (J,FH) SN74LS01 (J,N,FN)

logic symbol, '01, 'ALS01, 'LS01†

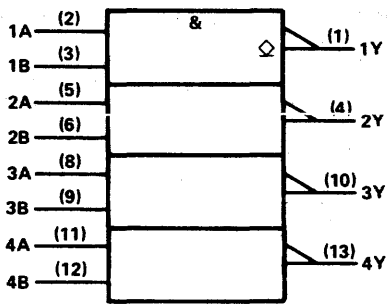

pin assignments, '01, 'ALS01, 'LS01

J, N PACKAGES				FH, FN PACKAGES			
1	1Y	8	3A	1	nc	11	nc
2	1A	9	3B	2	1Y	12	3A
3	1B	10	3Y	3	1A	13	3B
4	2Y	11	4A	4	1B	14	3Y
5	2A	12	4B	5	nc	15	nc
6	2B	13	4Y	6	2Y	16	4A
7	GND	14	V_{CC}	7	nc	17	nc
				8	2A	18	4B
				9	2B	19	4Y
				10	GND	20	V_{CC}

logic symbol, 'H01†

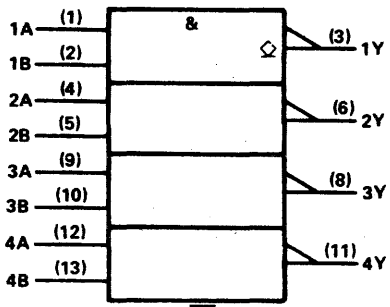

positive logic: $Y = \overline{AB}$

pin assignments, 'H01

J, N PACKAGES				FH, FN PACKAGES			
1	1A	8	3Y	1	nc	11	nc
2	1B	9	3A	2	1A	12	3Y
3	1Y	10	3B	3	1B	13	3A
4	2A	11	4Y	4	1Y	14	3B
5	2B	12	4A	5	nc	15	nc
6	2Y	13	4B	6	2A	16	4Y
7	GND	14	V_{CC}	7	nc	17	nc
				8	2B	18	4A
				9	2Y	19	4B
				10	GND	20	V_{CC}

02

QUADRUPLE 2-INPUT POSITIVE-NOR GATES

typical performance

TYPE	POWER	DELAY
'02	14 mW	10 ns
'ALS02	1.89 mW	5.5 ns
'AS02	12 mW	3 ns
'L02	1.5 mW	33 ns
'LS02	2.75 mW	10 ns
'S02	29 mW	3.5 ns

SN5402 (J,FH) SN7402 (J,N)
SN54ALS02 (J,FH) SN74ALS02 (N,FN)
SN54AS02 (J,FH) SN74AS02 (N,FN)
SN54L02 (J)
SN54LS02 (J,FH) SN74LS02 (J,N,FN)
SN54S02 (J,FH) SN74S02 (J,N,FN)

logic symbol†

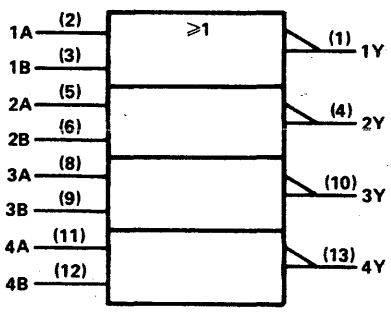

positive logic: $Y = \overline{A + B}$

pin assignments

J, N PACKAGES				FH, FN PACKAGES			
1	1Y	8	3A	1	nc	11	nc
2	1A	9	3B	2	1Y	12	3A
3	1B	10	3Y	3	1A	13	3B
4	2Y	11	4A	4	1B	14	3Y
5	2A	12	4B	5	nc	15	nc
6	2B	13	4Y	6	2Y	16	4A
7	GND	14	V_{CC}	7	nc	17	nc
				8	2A	18	4B
				9	2B	19	4Y
				10	GND	20	V_{CC}

† Pin numbers shown on logic symbols are for J and N packages only.
nc — no internal connection

See ALS/AS availability at Front of this Product Guide.

Copyright © 1983 by Texas Instruments Incorporated.

TEXAS INSTRUMENTS
POST OFFICE BOX 225012 • DALLAS, TEXAS 75265

For information on Texas Instruments Bipolar User Programmable products, see Programmable Logic Arrays in the Custom/Semi-Custom Section and Bipolar PROMs in the Memory section.

© IC MASTER 1984

03

QUADRUPLE 2-INPUT POSITIVE-NAND GATES WITH OPEN-COLLECTOR OUTPUTS

typical performance

TYPE	POWER	DELAY
'03	10 mW	22 ns
'ALS03A	1.28 mW	16 ns
'L03	1 mW	46 ns
'LS03	2 mW	16 ns
'S03	17.5 mW	16 ns

SN5403 (J,FH) SN7403 (J,N)
SN54ALS03A (J,FH) SN74ALS03A (N,FN)
SN54L03 (J)
SN54LS03 (J,FH) SN74LS03 (J,N,FN)
SN54S03 (J,FH) SN74S03 (J,N,FN)

logic symbol†

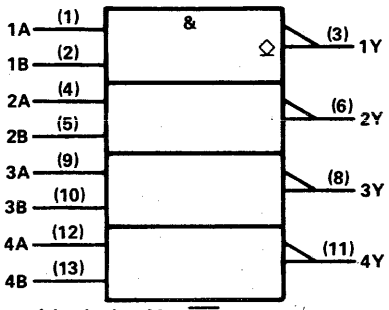

positive logic: $Y = \overline{AB}$

pin assignments

J, N PACKAGES				FH, FN PACKAGES			
1	1A	8	3Y	1	nc	11	nc
2	1B	9	3A	2	1A	12	3Y
3	1Y	10	3B	3	1B	13	3A
4	2A	11	4Y	4	1Y	14	3B
5	2B	12	4A	5	nc	15	nc
6	2Y	13	4B	6	2A	16	4Y
7	GND	14	V_{CC}	7	nc	17	nc
				8	2B	18	4A
				9	2Y	19	4B
				10	GND	20	V_{CC}

04

HEX INVERTERS

typical performance

TYPE	POWER	DELAY
'04	10 mW	10 ns
'ALS04A	1.27 mW	3.5 ns
AS04	7.4 mW	3 ns
'H04	22 mW	6 ns
'L04	1 mW	33 ns
'LS04	2 mW	9.5 ns
'S04	19 mW	3 ns

SN5404 (J,FH) SN7404 (J,N)
SN54ALS04A (J,FH) SN74ALS04A (N,FN)
SN54AS04 (J,FH) SN74AS04 (N,FN)
SN54H04 (J) SN74H04 (J,N)
SN54L04 (J)
SN54LS04 (J,FH) SN74LS04 (J,N,FN)
SN54S04 (J,FH) SN74S04 (J,N,FN)

logic symbol†

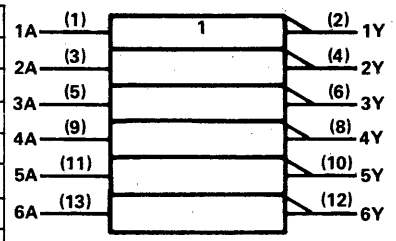

positive logic: $Y = \overline{A}$

pin assignments

J, N PACKAGES				FH, FN PACKAGES			
1	1A	8	4Y	1	nc	11	nc
2	1Y	9	4A	2	1A	12	4Y
3	2A	10	5Y	3	1Y	13	4A
4	2Y	11	5A	4	2A	14	5Y
5	3A	12	6Y	5	nc	15	nc
6	3Y	13	6A	6	2Y	16	5A
7	GND	14	V_{CC}	7	nc	17	nc
				8	3A	18	6Y
				9	3Y	19	6A
				10	GND	20	V_{CC}

05

HEX INVERTERS WITH OPEN-COLLECTOR OUTPUTS

typical performance

TYPE	POWER	DELAY
'05	10 mW	24 ns
'ALS05A	1.27 mW	13.5 ns
'H05	22 mW	8 ns
'LS05	2 mW	16 ns
'S05	17.5 mW	5 ns

SN5405 (J,FH) SN7405 (J,N)
SN54ALS05A (J,FH) SN74ALS05A (N,FN)
SN54H05 (J) SN74H05 (J,N)
SN54LS05 (J,FH) SN74LS05 (J,N,FN)
SN54S05 (J,FH) SN74S05 (J,N,FN)

logic symbol†

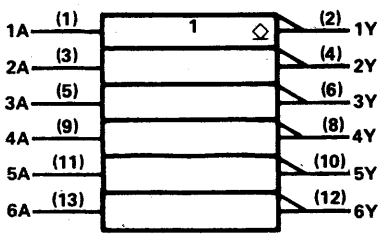

positive logic: $Y = \overline{A}$

pin assignments

J, N PACKAGES				FH, FN PACKAGES			
1	1A	8	4Y	1	nc	11	nc
2	1Y	9	4A	2	1A	12	4Y
3	2A	10	5Y	3	1Y	13	4A
4	2Y	11	5A	4	2A	14	5Y
5	3A	12	6Y	5	nc	15	nc
6	3Y	13	6A	6	2Y	16	5A
7	GND	14	V_{CC}	7	nc	17	nc
				8	3A	18	6Y
				9	3Y	19	6A
				10	GND	20	V_{CC}

See ALS/AS availability at front of this Product Guide.

† Pin numbers shown on logic symbols are for J and N packages only.
nc — no internal connection.

Copyright © 1983 by Texas Instruments Incorporated.

For information on Texas Instruments Bipolar User Programmable Products, see Programmable Logic Arrays in the Custom/Semi-Custom section and Bipolar PROMs in the Memory section.

TEXAS INSTRUMENTS
POST OFFICE BOX 225012 • DALLAS, TEXAS 75265

06

HEX INVERTER BUFFER/DRIVERS WITH OPEN-COLLECTOR HIGH-VOLTAGE OUTPUTS

typical performance

TYPE	HIGH-LEVEL OUTPUT VOLTAGE	LOW-LEVEL OUTPUT CURRENT	TYPICAL DELAY TIME	TYPICAL POWER PER GATE
SN54'	30 V	30 mA	12.5 ns	26 mW
SN74'	30 V	40 mA	12.5 ns	26 mW

SN5406 (J,FH) SN7406 (J,N)

logic symbol†

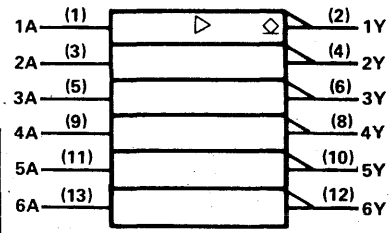

positive logic: $Y = \overline{A}$

pin assignments

J, N PACKAGES				FH PACKAGE			
1	1A	8	4Y	1	nc	11	nc
2	1Y	9	4A	2	1A	12	4Y
3	2A	10	5Y	3	1Y	13	4A
4	2Y	11	5A	4	2A	14	5Y
5	3A	12	6Y	5	nc	15	nc
6	3Y	13	6A	6	2Y	16	5A
7	GND	14	V_{CC}	7	nc	17	nc
				8	3A	18	6Y
				9	3Y	19	6A
				10	GND	20	V_{CC}

07

HEX BUFFERS/DRIVERS WITH OPEN-COLLECTOR HIGH-VOLTAGE OUTPUTS

typical performance

TYPE	HIGH-LEVEL OUTPUT VOLTAGE	LOW-LEVEL OUTPUT CURRENT	TYPICAL DELAY TIME	TYPICAL POWER PER GATE
SN54'	30 V	30 mA	13 ns	21 mW
SN74'	30 V	40 mA	13 ns	21 mW

SN5407 (J,FH) SN7407 (J,N)

logic symbol†

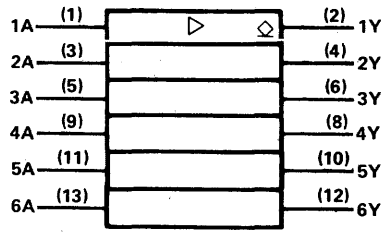

positive logic: Y = A

pin assignments

J, N PACKAGES				FH PACKAGE			
1	1A	8	4Y	1	nc	11	nc
2	1Y	9	4A	2	1A	12	4Y
3	2A	10	5Y	3	1Y	13	4A
4	2Y	11	5A	4	2A	14	5Y
5	3A	12	6Y	5	nc	15	nc
6	3Y	13	6A	6	2Y	16	5A
7	GND	14	V_{CC}	7	nc	17	nc
				8	3A	18	6Y
				9	3Y	19	6A
				10	GND	20	V_{CC}

08

QUADRUPLE 2-INPUT POSITIVE-AND GATES

TYPE	POWER	DELAY
'08	19 mW	15 ns
'ALS08	2.19 mW	6.5 ns
AS08	13 mW	4 ns
'LS08	4.25 mW	12 ns
'S08	32 mW	4.75 ns

SN5408 (J,FH) SN7408 (J,N)
SN54ALS08 (J,FH) SN74ALS08 (N,FN)
SN54AS08 (J,FH) SN74AS08 (N,FN)
SN54LS08 (J,FH) SN74LS08 (J,N,FN)
SN54S08 (J,FH) SN74S08 (J,N,FN)

logic symbol†

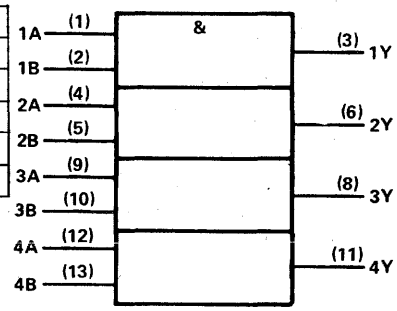

positive logic: Y = AB

pin assignments

J, N PACKAGES				FH, FN PACKAGES			
1	1A	8	3Y	1	nc	11	nc
2	1B	9	3A	2	1A	12	3Y
3	1Y	10	3B	3	1B	13	3A
4	2A	11	4Y	4	1Y	14	3B
5	2B	12	4A	5	nc	15	nc
6	2Y	13	4B	6	2A	16	4Y
7	GND	14	V_{CC}	7	nc	17	nc
				8	2B	18	4A
				9	2Y	19	4B
				10	GND	20	V_{CC}

† Pin numbers shown on logic symbols are for J and N packages only.
nc — no internal connection.

For additional information on other Texas Instruments Military products, refer to the Military section.

Copyright © 1983 by Texas Instruments Incorporated.

TEXAS INSTRUMENTS
POST OFFICE BOX 225012 • DALLAS, TEXAS 75265

© IC MASTER 1984

09

QUADRUPLE 2-INPUT POSITIVE-AND GATES WITH OPEN-COLLECTOR OUTPUTS

typical performance

TYPE	POWER	DELAY
'09	19.4 mW	18.5 ns
'ALS09	2.22 mW	15 ns
'LS09	4.25 mW	20 ns
'S09	32 mW	6.5 ns

SN5409 (J,FH) SN7409 (J,N)
SN54ALS09 (J,FH) SN74ALS09 (N,FN)
SN54LS09 (J,FH) SN74LS09 (J,N,FN)
SN54S09 (J,FH) SN74S09 (J,N,FN)

logic symbol†

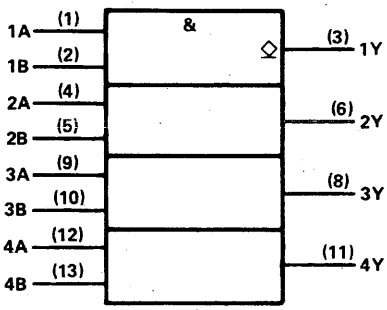

positive logic: Y = AB

pin assignments

J, N PACKAGES				FH, FN PACKAGES			
1	1A	8	3Y	1	nc	11	nc
2	1B	9	3A	2	1A	12	3Y
3	1Y	10	3B	3	1B	13	3A
4	2A	11	4Y	4	1Y	14	3B
5	2B	12	4A	5	nc	15	nc
6	2Y	13	4B	6	2A	16	4Y
7	GND	14	V_{CC}	7	nc	17	nc
				8	2B	18	4A
				9	2Y	19	4B
				10	GND	20	V_{CC}

10

TRIPLE 3-INPUT POSITIVE-NAND GATES

typical performance

TYPE	POWER	DELAY
'10	10 mW	10 ns
'ALS10	1.27 mW	7 ns
'AS10	8 mW	3 ns
'H10	22 mW	6 ns
'L10	1 mW	33 ns
'LS10	2 mW	9.5 ns
'S10	19 mW	3 ns

SN5410 (J,FH) SN7410 (J,N)
SN54ALS10 (J,FH) SN74ALS10 (N,FN)
SN54AS10 (J,FH) SN74AS10 (N,FN)
SN54H10 (J) SN74H10 (J,N)
SN54L10 (J)
SN54LS10 (J,FH) SN74LS10 (J,N,FN)
SN54S10 (J,FH) SN74S10 (J,N,FN)

logic symbol†

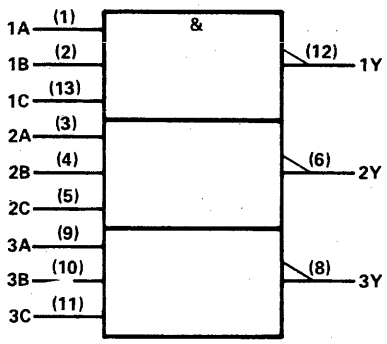

positive logic: $Y = \overline{ABC}$

pin assignments

J, N PACKAGES				FH, FN PACKAGES			
1	1A	8	3Y	1	nc	11	nc
2	1B	9	3A	2	1A	12	3Y
3	2A	10	3B	3	1B	13	3A
4	2B	11	3C	4	2A	14	3B
5	2C	12	1Y	5	nc	15	nc
6	2Y	13	1C	6	2B	16	3C
7	GND	14	V_{CC}	7	nc	17	nc
				8	2C	18	1Y
				9	2Y	19	1C
				10	GND	20	V_{CC}

11

TRIPLE 3-INPUT POSITIVE-AND GATES

typical performance

TYPE	POWER	DELAY
'ALS11	2.17 mW	9 ns
'AS11	13 mW	4 ns
'H11	40 mW	8.2 ns
'LS11	4.25 mW	12 ns
'S11	31 mW	4.75 ns

SN54ALS11 (J,FH) SN74ALS11 (N,FN)
SN54AS11 (J,FH) SN74AS11 (N,FN)
SN54H11 (J) SN74H11 (J,N)
SN54LS11 (J,FH) SN74LS11 (J,N,FN)
SN54S11 (J,FH) SN74S11 (J,N,FN)

logic symbol†

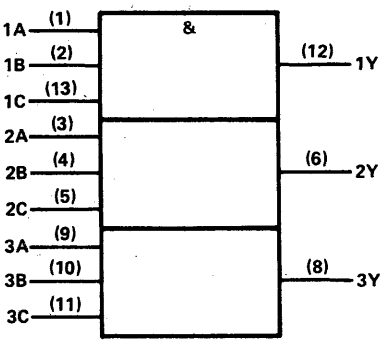

positive logic: Y = ABC

pin assignments

J, N PACKAGES				FH, FN PACKAGES			
1	1A	8	3Y	1	nc	11	nc
2	1B	9	3A	2	1A	12	3Y
3	2A	10	3B	3	1B	13	3A
4	2B	11	3C	4	2A	14	3B
5	2C	12	1Y	5	nc	15	nc
6	2Y	13	1C	6	2B	16	3C
7	GND	14	V_{CC}	7	nc	17	nc
				8	2C	18	1Y
				9	2Y	19	1C
				10	GND	20	V_{CC}

† Pin numbers shown on logic symbols are for J and N packages only.
nc — no internal connection.

For additional information on other Texas Instruments Military products, refer to the Military section.

Copyright © 1983 by Texas Instruments Incorporated.

12

TRIPLE 3-INPUT POSITIVE-NAND GATES WITH OPEN-COLLECTOR OUTPUTS

SN5412 (J,FH)
SN54ALS12 (J,FH)
SN54LS12 (J,FH)

SN7412 (J,N)
SN74ALS12 (N,FN)
SN74LS12 (J,N,FN)

typical performance

TYPE	POWER	DELAY
'12	10 mW	22 ns
'ALS12	1.27 mW	17.5 ns
'LS12	2 mW	16 ns

logic symbol†

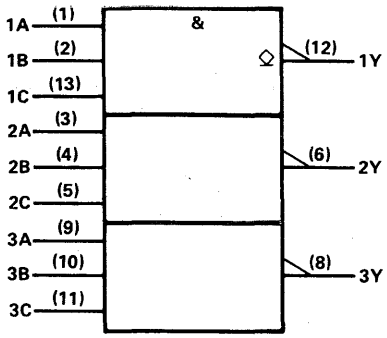

positive logic: $Y = \overline{ABC}$

pin assignments

J, N PACKAGES				FH, FN PACKAGES			
1	1A	8	3Y	1	nc	11	nc
2	1B	9	3A	2	1A	12	3Y
3	2A	10	3B	3	1B	13	3A
4	2B	11	3C	4	2A	14	3B
5	2C	12	1Y	5	nc	15	nc
6	2Y	13	1C	6	2B	16	3C
7	GND	14	V_{CC}	7	nc	17	nc
				8	2C	18	1Y
				9	2Y	19	1C
				10	GND	20	V_{CC}

13

DUAL 4-INPUT POSITIVE-NAND SCHMITT TRIGGERS

SN5413 (J,FH)
SN54LS13 (J,FH)

SN7413 (J,N)
SN74LS13 (J,N,FN)

typical performance

TYPE	HYSTERESIS	DELAY
'13	0.8 V	16.5 ns
'LS13	0.8 V	16.5 ns

logic symbol†

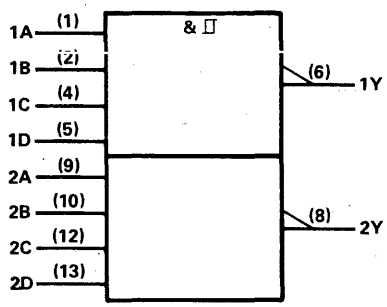

positive logic: $Y = \overline{ABCD}$

pin assignments

J, N PACKAGES				FH, FN PACKAGES			
1	1A	8	2Y	1	nc	11	nc
2	1B	9	2A	2	1A	12	2Y
3	nc	10	2B	3	1B	13	2A
4	1C	11	nc	4	nc	14	2B
5	1D	12	2C	5	nc	15	nc
6	1Y	13	2D	6	1C	16	nc
7	GND	14	V_{CC}	7	nc	17	nc
				8	1D	18	2C
				9	1Y	19	2D
				10	GND	20	V_{CC}

14

HEX SCHMITT-TRIGGER INVERTERS

SN5414 (J,FH)
SN54LS14 (J,FH)

SN7414 (J,N)
SN74LS14 (J,N,FN)

typical performance

TYPE	HYSTERESIS	DELAY
'14	0.8 V	15 ns
'LS14	0.8 V	15 ns

logic symbol†

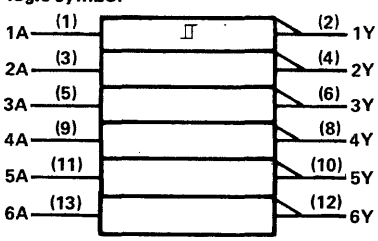

positive logic: $Y = \overline{A}$

pin assignments

J, N PACKAGES				FH, FN PACKAGES			
1	1A	8	4Y	1	nc	11	nc
2	1Y	9	4A	2	1A	12	4Y
3	2A	10	5Y	3	1Y	13	4A
4	2Y	11	5A	4	2A	14	5Y
5	3A	12	6Y	5	nc	15	nc
6	3Y	13	6A	6	2Y	16	5A
7	GND	14	V_{CC}	7	nc	17	nc
				8	3A	18	6Y
				9	3Y	19	6A
				10	GND	20	V_{CC}

† Pin numbers shown on logic symbols are for J and N packages only.
nc — no internal connection.

For additional users information, see Texas Instruments plastic chip-carrier data in the Application Notes section of this IC Master.

Copyright © 1983 by Texas Instruments Incorporated.

TEXAS INSTRUMENTS
POST OFFICE BOX 225012 • DALLAS, TEXAS 75265

© IC MASTER 1984

15

TRIPLE 3-INPUT POSITIVE-AND GATES WITH OPEN-COLLECTOR OUTPUTS

typical performance

TYPE	POWER	DELAY
'ALS15	2.22 mW	15 ns
'H15	38 mW	10.5 ns
'LS15	4.25 mW	15 ns
'S15	28 mW	15 ns

SN54ALS15 (J,FH) SN74ALS15 (N,FN)
SN54H15 (J) SN74H15 (J,N)
SN54LS15 (J,FH) SN74LS15 (J,N,FN)
SN54S15 (J,FH) SN74S15 (J,N,FN)

logic symbol†

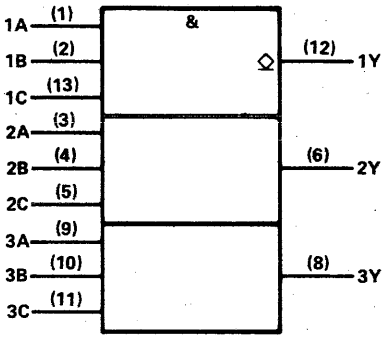

positive logic: Y = ABC

pin assignments

J, N PACKAGES			
1	1A	8	3Y
2	1B	9	3A
3	2A	10	3B
4	2B	11	3C
5	2C	12	1Y
6	2Y	13	1C
7	GND	14	V_{CC}

FH, FN PACKAGES			
1	nc	11	nc
2	1A	12	3Y
3	1B	13	3A
4	2A	14	3B
5	nc	15	nc
6	2B	16	3C
7	nc	17	nc
8	2C	18	1Y
9	2Y	19	1C
10	GND	20	V_{CC}

16

HEX INVERTER BUFFER/DRIVERS WITH OPEN-COLLECTOR HIGH-VOLTAGE OUTPUTS

typical performance

TYPE	HIGH-LEVEL OUTPUT VOLTAGE	LOW-LEVEL OUTPUT CURRENT	TYPICAL DELAY TIME	TYPICAL POWER PER GATE
SN74'	15 V	40 mA	12.5 ns	26 mW
SN54'	15 V	30 mA	12.5 ns	26 mW

SN5416 (J) SN7416 (J,N)

logic symbol†

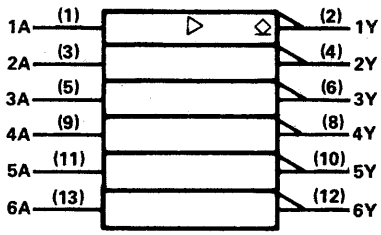

positive logic: $Y = \overline{A}$

pin assignments

J, N PACKAGES			
1	1A	8	4Y
2	1Y	9	4A
3	2A	10	5Y
4	2Y	11	5A
5	3A	12	6Y
6	3Y	13	6A
7	GND	14	V_{CC}

17

HEX BUFFERS/DRIVERS WITH OPEN-COLLECTOR HIGH-VOLTAGE OUTPUTS

typical performance

TYPE	HIGH-LEVEL OUTPUT VOLTAGE	LOW-LEVEL OUTPUT CURRENT	TYPICAL DELAY TIME	TYPICAL POWER PER GATE
SN74'	15 V	40 mA	13 ns	21 mW
SN54'	15 V	30 mA	13 ns	21 mW

SN5417 (J) SN7417 (J,N)

logic symbol†

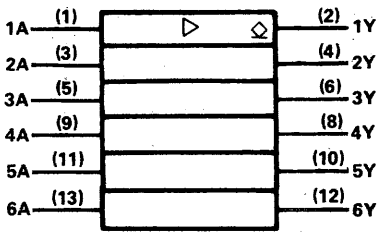

positive logic: Y = A

pin assignments

J, N PACKAGES			
1	1A	8	4Y
2	1Y	9	4A
3	2A	10	5Y
4	2Y	11	5A
5	3A	12	6Y
6	3Y	13	6A
7	GND	14	V_{CC}

† Pin numbers shown on logic symbols are for J and N packages only.
nc — no internal connection.

For additional users information, see Texas Instruments plastic chip-carrier data in the Application Notes section of this IC Master.

Copyright © 1983 by Texas Instruments Incorporated.

18

SCHMITT-TRIGGER POSITIVE-NAND GATES WITH TOTEM-POLE OUTPUTS

SN54LS18 (J,FH) SN74LS18 (J,N,FN)

typical performance

TYPE	HYSTERESIS	DELAY
'LS18	0.7 V	25 ns

logic symbol†

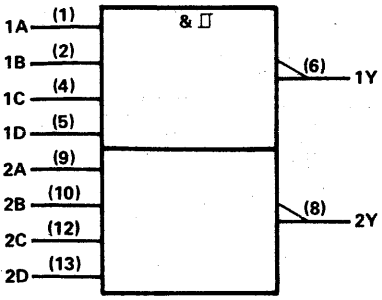

positive logic: $Y = \overline{ABCD}$

pin assignments

J, N PACKAGES				FH, FN PACKAGES			
1	1A	8	2Y	1	nc	11	nc
2	1B	9	2A	2	1A	12	2Y
3	nc	10	2B	3	1B	13	2A
4	1C	11	nc	4	nc	14	2B
5	1D	12	2C	5	nc	15	nc
6	1Y	13	2D	6	1C	16	nc
7	GND	14	V_{CC}	7	nc	17	nc
				8	1D	18	2C
				9	1Y	19	2D
				10	GND	20	V_{CC}

19

SCHMITT-TRIGGER INVERTERS WITH TOTEM-POLE OUTPUTS

SN54LS19 (J,FH) SN74LS19 (J,N,FN)

typical performance

TYPE	HYSTERESIS	DELAY
'LS19	0.7 V	16 ns

logic symbol†

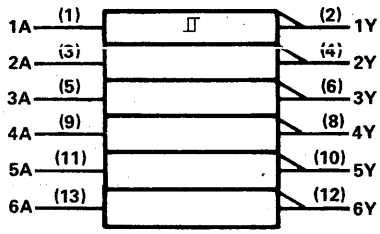

positive logic: $Y = \overline{A}$

pin assignments

J, N PACKAGES				FH, FN PACKAGES			
1	1A	8	4Y	1	nc	11	nc
2	1Y	9	4A	2	1A	12	4Y
3	2A	10	5Y	3	1Y	13	4A
4	2Y	11	5A	4	2A	14	5Y
5	3A	12	6Y	5	nc	15	nc
6	3Y	13	6A	6	2Y	16	5A
7	GND	14	V_{CC}	7	nc	17	nc
				8	3A	18	6Y
				9	3Y	19	6A
				10	GND	20	V_{CC}

20

DUAL 4-INPUT POSITIVE-NAND GATES

typical performance

TYPE	POWER	DELAY
'20	10 mW	10 ns
'ALS20A	1.29 mW	4 ns
'AS20	8 mW	3.3 ns
'H20	22 mW	6 ns
'L20	1 mW	33 ns
'LS20	2 mW	9.5 ns
'S20	19 mW	3 ns

logic symbol†

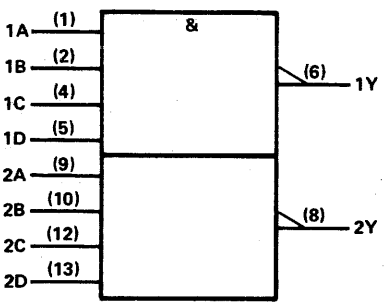

positive logic: $Y = \overline{ABCD}$

pin assignments

J, N PACKAGES				FH, FN PACKAGES			
1	1A	8	2Y	1	nc	11	nc
2	1B	9	2A	2	1A	12	2Y
3	nc	10	2B	3	1B	13	2A
4	1C	11	nc	4	nc	14	2B
5	1D	12	2C	5	nc	15	nc
6	1Y	13	2D	6	1C	16	nc
7	GND	14	V_{CC}	7	nc	17	nc
				8	1D	18	2C
				9	1Y	19	2D
				10	GND	20	V_{CC}

SN5420 (J,FH) SN7420 (J,N)
SN54ALS20A (J,FH) SN74ALS20A (N,FN)
SN54AS20 (J,FH) SN74AS20 (N,FN)
S N54H20 (J) SN74H20 (J,N)
SN54L20 (J)
SN54LS20 (J,FH) SN74LS20 (J,N,FN)
SN54S20 (J,FH) SN74S20 (J,N,FN)

† Pin numbers shown on logic symbols are for J and N packages only.
nc — no internal connection.

Copyright © 1983 by Texas Instruments Incorporated.

TEXAS INSTRUMENTS
POST OFFICE BOX 225012 • DALLAS, TEXAS 75265

© IC MASTER 1984

21

DUAL 4-INPUT POSITIVE-AND GATES

typical performance

TYPE	POWER	DELAY
'ALS21	2.21 mW	8.5 ns
'AS21	13 mW	4.3 ns
'H21	40 mW	8.2 ns
'LS21	4.25 mW	12 ns

SN54ALS21 (J,FH) SN74ALS21 (N,FN)
SN54AS21 (J,FH) SN74AS21 (N,FN)
SN54H21 (J) SN74H21 (J,N)
SN54LS21 (J,FH) SN74LS21 (J,N,FN)

logic symbol†

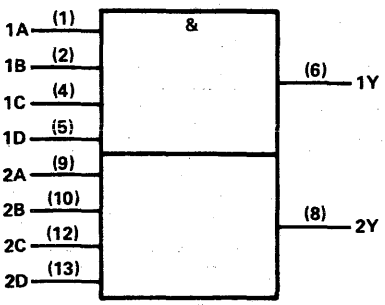

positive logic: Y = ABCD

pin assignments

J, N PACKAGES				FH, FN PACKAGES			
1	1A	8	2Y	1	nc	11	nc
2	1B	9	2A	2	1A	12	2Y
3	nc	10	2B	3	1B	13	2A
4	1C	11	nc	4	nc	14	2B
5	1D	12	2C	5	nc	15	nc
6	1Y	13	2D	6	1C	16	nc
7	GND	14	V_{CC}	7	nc	17	nc
				8	1D	18	2C
				9	1Y	19	2D
				10	GND	20	V_{CC}

22

DUAL 4-INPUT POSITIVE-NAND GATES WITH OPEN-COLLECTOR OUTPUTS

typical performance

TYPE	POWER	DELAY
'22	10 mW	22 ns
'ALS22A	1.28 mW	16.5 ns
'H22	22 mW	8 ns
'LS22	2 mW	16 ns
'S22	17.5 mW	5 ns

SN5422 (J,FH) SN7422 (J,N)
SN54ALS22A (J,FH) SN74ALS22A (N,FN)
SN54H22 (J) SN74H22 (J,N)
SN54LS22 (J,FH) SN74LS22 (J,N,FN)
SN54S22 (J,FH) SN74S22 (J,N,FN)

logic symbol†

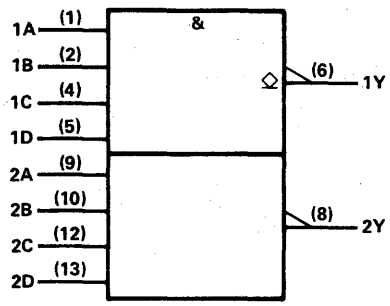

positive logic: $Y = \overline{ABCD}$

pin assignments

J, N PACKAGES				FH, FN PACKAGES			
1	1A	8	2Y	1	nc	11	nc
2	1B	9	2A	2	1A	12	2Y
3	nc	10	2B	3	1B	13	2A
4	1C	11	nc	4	nc	14	2B
5	1D	12	2C	5	nc	15	nc
6	1Y	13	2D	6	1C	16	nc
7	GND	14	V_{CC}	7	nc	17	nc
				8	1D	18	2C
				9	1Y	19	2D
				10	GND	20	V_{CC}

23

EXPANDABLE DUAL 4-INPUT POSITIVE-NOR GATES WITH STROBE

typical performance

TYPE	POWER	DELAY
'23	23 mW	10.5 ns

SN5423 (J,FH) SN7423 (J,N)

logic symbol†

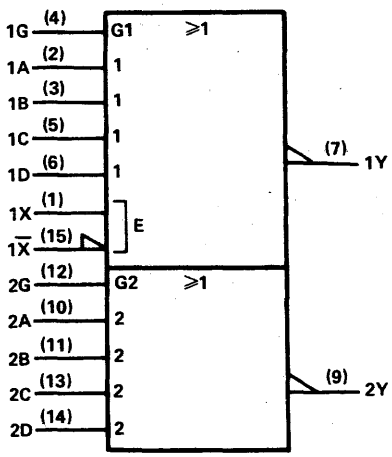

pin assignments

J, N PACKAGES				FH PACKAGE			
1	1X	9	2Y	1	nc	11	nc
2	1A	10	2A	2	1X	12	2Y
3	1B	11	2B	3	1A	13	2A
4	1G	12	2G	4	1B	14	2B
5	1C	13	2C	5	1G	15	2G
6	1D	14	2D	6	nc	16	nc
7	1Y	15	$1\overline{X}$	7	1C	17	2C
8	GND	16	V_{CC}	8	1D	18	2D
				9	1Y	19	$1\overline{X}$
				10	GND	20	V_{CC}

positive logic:

$1Y = \overline{1G\,(1A+1B+1C+1D)+X}$

$2Y = \overline{2G\,(2A+2B+2C+2D)}$

X = output of SN5460/SN7460

† Pin numbers shown on logic symbols are for J and N packages only.
nc — no internal connection.

Copyright © 1983 by Texas Instruments Incorporated.

24

SCHMITT-TRIGGER POSITIVE-NAND GATES/INVERTERS WITH TOTEM POLE OUTPUTS

typical performance

TYPE	HYSTERESIS	DELAY
'LS24	0.7 V	19 ns

SN54LS24 (J,FH) SN74LS24 (J,N,FN)

logic symbol†

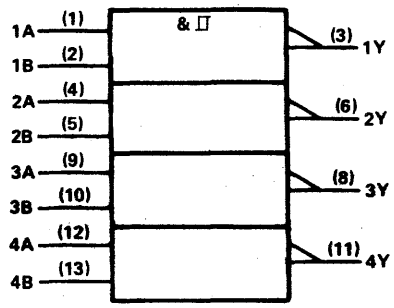

positive logic: $Y = \overline{AB}$

pin assignments

J, N PACKAGES				FH, FN PACKAGES			
1	1A	8	3Y	1	nc	11	nc
2	1B	9	3A	2	1A	12	3Y
3	1Y	10	3B	3	1B	13	3A
4	2A	11	4Y	4	1Y	14	3B
5	2B	12	4A	5	nc	15	nc
6	2Y	13	4B	6	2A	16	4Y
7	GND	14	V_{CC}	7	nc	17	nc
				8	2B	18	4A
				9	2Y	19	4B
				10	GND	20	V_{CC}

25

DUAL 4-INPUT POSITIVE-NOR GATES WITH STROBE

typical performance

TYPE	POWER	DELAY
'25	23 mW	10.5 ns

SN5425 (J,FH) SN7425 (J,N)

logic symbol†

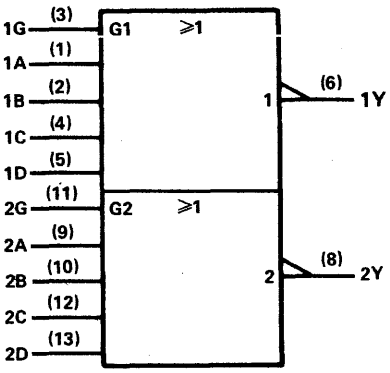

positive logic:
$Y = \overline{G\,(A+B+C+D)}$

pin assignments

J, N PACKAGES				FH PACKAGE			
1	1A	8	2Y	1	nc	11	nc
2	1B	9	2A	2	1A	12	2Y
3	1G	10	2B	3	1B	13	2A
4	1C	11	2G	4	1G	14	2B
5	1D	12	2C	5	nc	15	nc
6	1Y	13	2D	6	1C	16	2G
7	GND	14	V_{CC}	7	nc	17	nc
				8	1D	18	2C
				9	1Y	19	2D
				10	GND	20	V_{CC}

26

QUADRUPLE 2-INPUT HIGH-VOLTAGE INTERFACE POSITIVE-NAND GATES

typical performance

TYPE	HIGH-LEVEL OUTPUT VOLTAGE	LOW-LEVEL OUTPUT CURRENT	POWER	DELAY
'26	15 V	16 mA	10 mW	13.5 ns
'LS26	15 V	4 mA	2 mW	16 ns

SN5426 (J,FH) SN7426 (J,N)
SN54LS26 (J,FH) SN74LS26 (J,N,FN)

logic symbol†

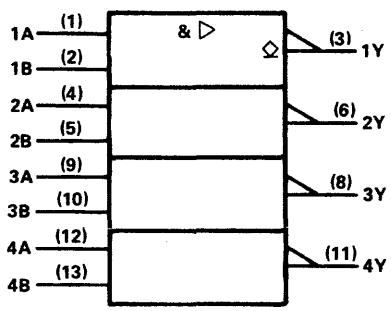

positive logic: $Y = \overline{AB}$

pin assignments

J, N PACKAGES				FH, FN PACKAGES			
1	1A	8	3Y	1	nc	11	nc
2	1B	9	3A	2	1A	12	3Y
3	1Y	10	3B	3	1B	13	3A
4	2A	11	4Y	4	1Y	14	3B
5	2B	12	4A	5	nc	15	nc
6	2Y	13	4B	6	2A	16	4Y
7	GND	14	V_{CC}	7	nc	17	nc
				8	2B	18	4A
				9	2Y	19	4B
				10	GND	20	V_{CC}

† Pin numbers shown on logic symbols are for J and N packages only.
nc — no internal connection.

Copyright © 1983 by Texas Instruments Incorporated.

27

TRIPLE 3-INPUT POSITIVE-NOR GATES

typical performance

TYPE	POWER	DELAY
'27	22 mW	8.5 ns
'ALS27	2.48 mW	6 ns
'AS27	12.2 mW	3.5 ns
'LS27	4.5 mW	10 ns

SN5427 (J,FH) SN7427 (J,N)
SN54ALS27 (J,FH) SN74ALS27 (N,FN)
SN54AS27 (J,FH) SN74AS27 (N,FN)
SN54LS27 (J,FH) SN74LS27 (J,N,FN)

logic symbol†

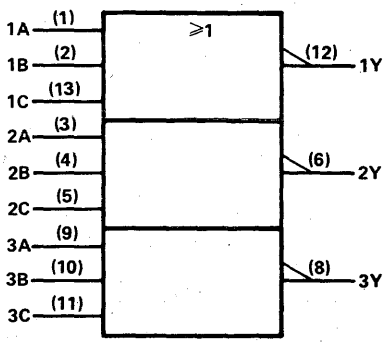

positive logic: $Y = \overline{A+B+C}$

pin assignments

J, N PACKAGES				FH, FN PACKAGES			
1	1A	8	3Y	1	nc	11	nc
2	1B	9	3A	2	1A	12	3Y
3	2A	10	3B	3	1B	13	3A
4	2B	11	3C	4	2A	14	3B
5	2C	12	1Y	5	nc	15	nc
6	2Y	13	1C	6	2B	16	3C
7	GND	14	V_{CC}	7	nc	17	nc
				8	2C	18	1Y
				9	2Y	19	1C
				10	GND	20	V_{CC}

28

QUADRUPLE 2-INPUT POSITIVE-NOR BUFFERS

performance

TYPE	LOW-LEVEL OUTPUT CURRENT	HIGH-LEVEL OUTPUT CURRENT	POWER (TYP)	DELAY (TYP)
'28	48 mA	−2.4 mA	28 mW	7 ns
SN54ALS'	12 mA	−1 mA	4.06 mW	4 ns
SN74ALS'	24 mA	−2.6 mA	4.06 mW	4 ns
SN54LS'	12 mA	−1.2 mA	5.5 mW	12 ns
SN74LS'	24 mA	−1.2 mA	5.5 mW	12 ns

SN5428 (J,FH) SN7428 (J,N)
SN54ALS28A (J,FH) SN74ALS28A (N,FN)
SN54LS28 (J,FH) SN74LS28 (J,N,FN)

logic symbol†

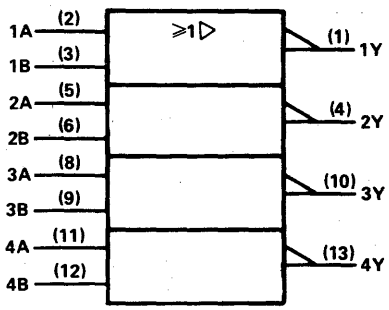

positive logic: $Y = \overline{A+B}$

pin assignments

J, N PACKAGES				FH, FN PACKAGES			
1	1Y	8	3A	1	nc	11	nc
2	1A	9	3B	2	1Y	12	3A
3	1B	10	3Y	3	1A	13	3B
4	2Y	11	4A	4	1B	14	3Y
5	2A	12	4B	5	nc	15	nc
6	2B	13	4Y	6	2Y	16	4A
7	GND	14	V_{CC}	7	nc	17	nc
				8	2A	18	4B
				9	2B	19	4Y
				10	GND	20	V_{CC}

30

8-INPUT POSITIVE-NAND GATE

typical performance

TYPE	POWER	DELAY
'30	10 mW	10 ns
'ALS30	1.9 mW	7 ns
'AS30	9.75 mW	3.5 ns
'H30	22 mW	6 ns
'L30	1 mW	33 ns
'LS30	2.4 mW	17 ns
'S30	19 mW	3 ns

SN5430 (J,FH) SN7430 (J,N)
SN54ALS30 (J,FH) SN74ALS30 (N,FN)
SN54AS30 (J,FH) SN74AS30 (N,FN)
SN54H30 (J) SN74H30 (J,N)
SN54L30 (J)
SN54LS30 (J,FH) SN74LS30 (J,N,FN)
SN54S30 (J,FH) SN74S30 (J,N,FN)

logic symbol†

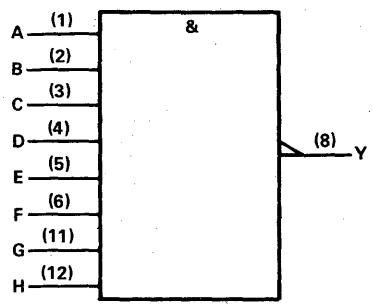

positive logic:
$Y = \overline{ABCDEFGH}$

pin assignments

J, N PACKAGES				FH, FN PACKAGES			
1	A	8	Y	1	nc	11	nc
2	B	9	nc	2	A	12	Y
3	C	10	nc	3	B	13	nc
4	D	11	G	4	C	14	nc
5	E	12	H	5	nc	15	nc
6	F	13	nc	6	D	16	G
7	GND	14	V_{CC}	7	nc	17	nc
				8	E	18	H
				9	F	19	nc
				10	GND	20	V_{CC}

† Pin numbers shown on logic symbols are for J and N packages only.
nc — no internal connection.

Copyright © 1983 by Texas Instruments Incorporated.

TEXAS INSTRUMENTS
POST OFFICE BOX 225012 • DALLAS, TEXAS 75265

31

DELAY ELEMENTS
(delay elements for generating delay lines)

- Buffers 3 and 4 offer 3-fold increase in I_{OL} (12 mA/24 mA)
- Total power dissipation 38 mW

typical performance

DELAY ELEMENT	LOGIC	DELAY
Gates 1 and 6	Inverting	27.5 ns
Gates 2 and 5	Noninverting	46.5 ns
Buffers 3 and 4	2-Input NAND	6 ns

SN54LS31 (J,FH) SN74LS31 (J,N,FN)

logic symbol†

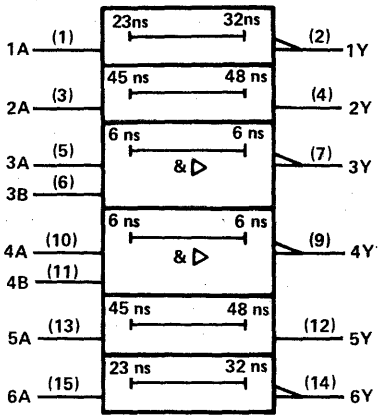

pin assignments

J, N PACKAGES				FH, FN PACKAGES			
1	1A	9	4Y	1	nc	11	nc
2	1Y	10	4A	2	1A	12	4Y
3	2A	11	4B	3	1Y	13	4A
4	2Y	12	5Y	4	2A	14	4B
5	3A	13	5A	5	2Y	15	5Y
6	3B	14	6Y	6	nc	16	nc
7	3Y	15	6A	7	3A	17	5A
8	GND	16	V_{CC}	8	3B	18	6Y
				9	3Y	19	6A
				10	GND	20	V_{CC}

32

QUADRUPLE 2-INPUT POSITIVE-OR GATE

typical performance

TYPE	POWER	DELAY
'32	24 mW	12 ns
'ALS32	2.81 mW	5.5 ns
'AS32	14.5 mW	4.5 ns
'LS32	5 mW	12 ns
'S32	35 mW	4 ns

SN5432 (J,FH) SN7432 (J,N)
SN54ALS32 (J,FH) SN74ALS32 (N,FN)
SN54AS32 (J,FH) SN74AS32 (N,FN)
SN54LS32 (J,FH) SN74LS32 (J,N,FN)
SN54S32 (J,FH) SN74S32 (J,N,FN)

logic symbol†

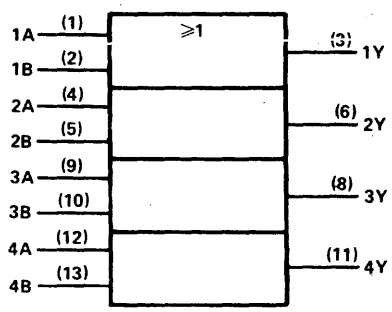

positive logic: Y = A+B

pin assignments

J, N PACKAGES				FH, FN PACKAGES			
1	1A	8	3Y	1	nc	11	nc
2	1B	9	3A	2	1A	12	3Y
3	1Y	10	3B	3	1B	13	3A
4	2A	11	4Y	4	1Y	14	3B
5	2B	12	4A	5	nc	15	nc
6	2Y	13	4B	6	2A	16	4Y
7	GND	14	V_{CC}	7	nc	17	nc
				8	2B	18	4A
				9	2Y	19	4B
				10	GND	20	V_{CC}

33

QUADRUPLE 2-INPUT POSITIVE-NOR BUFFERS WITH OPEN-COLLECTOR OUTPUTS

performance

TYPE	HIGH-LEVEL OUTPUT VOLTAGE	LOW-LEVEL OUTPUT CURRENT	POWER (TYP)	DELAY (TYP)
'33	5.5 V	48 mA	28 mW	11 ns
SN54ALS'	5.5 V	12 mA	4.06 mW	14.5 ns
SN74ALS'	5.5 V	24 mA	4.06 mW	14.5 ns
SN54LS'	5.5 V	12 mA	5.45 mW	19 ns
SN74LS'	5.5 V	24 mA	5.45 mW	19 ns

SN5433 (J,FH) SN7433 (J,N)
SN54ALS33A (J,FH) SN74ALS33A (N,FN)
SN54LS33 (J,FH) SN74LS33 (J,N,FN)

logic symbol†

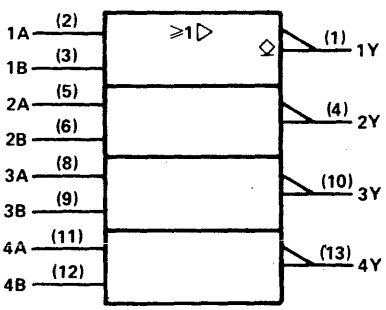

positive logic: $Y = \overline{A+B}$

pin assignments

J, N PACKAGES			
1	1Y	8	3A
2	1A	9	3B
3	1B	10	3Y
4	2Y	11	4A
5	2A	12	4B
6	2B	13	4Y
7	GND	14	V_{CC}

FH, FN PACKAGES			
1	nc	11	nc
2	1Y	12	3A
3	1A	13	3B
4	1B	14	3Y
5	nc	15	nc
6	2Y	16	4A
7	nc	17	nc
8	2A	18	4B
9	2B	19	4Y
10	GND	20	V_{CC}

nc — no internal connection.
†Pin numbers shown on logic symbols are for J and N packages only.

Copyright © 1983 by Texas Instruments Incorporated.

34

HEX NONINVERTERS

- Non-inverting outputs

typical performance

TYPE	POWER	DELAY
'ALS34	1.9 mW	8 ns
'AS34	12 mW	3.3 ns

SN54ALS34 (J,FH) SN74ALS34 (N,FN)
SN54AS34 (J,FH) SN74AS34 (N,FN)

logic symbol †

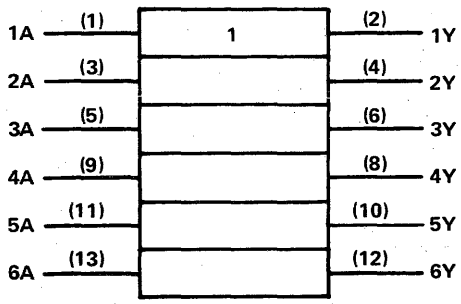

positive logic Y = A

pin assignments

J,N PACKAGES				FH,FN PACKAGES			
1	1A	8	4Y	1	nc	11	nc
2	1Y	9	4A	2	1A	12	4Y
3	2A	10	5Y	3	1Y	13	4A
4	2Y	11	5A	4	2A	14	5Y
5	3A	12	6Y	5	nc	15	nc
6	3Y	13	6A	6	2Y	16	5A
7	GND	14	V_{CC}	7	nc	17	nc
				8	3A	18	6Y
				9	3Y	19	6A
				10	GND	20	V_{CC}

35

HEX NONINVERTERS WITH OPEN-COLLECTOR OUTPUTS

- Non-inverting outputs

typical performance

TYPE	POWER	DELAY
'ALS35	1.9 mW	2.5 ns

SN54ALS35 (J,FH) SN74ALS35 (N,FN)

logic symbol †

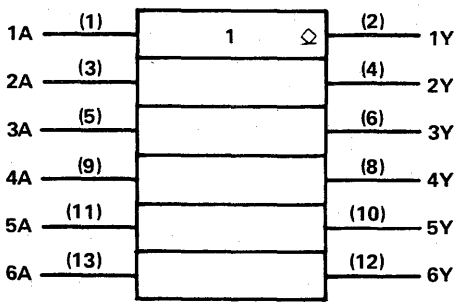

positive logic Y = A

pin assignments

J,N PACKAGES				FH, FN PACKAGES			
1	1A	8	4Y	1	nc	11	nc
2	1Y	9	4A	2	1A	12	4Y
3	2A	10	5Y	3	1Y	13	4A
4	2Y	11	5A	4	2A	14	5Y
5	3A	12	6Y	5	nc	15	nc
6	3Y	13	6A	6	2Y	16	5A
7	GND	14	V_{CC}	7	nc	17	nc
				8	3A	18	6Y
				9	3Y	19	6A
				10	GND	20	V_{CC}

† Pin numbers shown on logic symbols are for J and N packages only.
nc — no internal connection.

Copyright © 1983 by Texas Instruments Incorporated.

TEXAS INSTRUMENTS
POST OFFICE BOX 225012 • DALLAS, TEXAS 75265

37

QUADRUPLE 2-INPUT POSITIVE-NAND BUFFERS

performance

TYPE	HIGH-LEVEL OUTPUT CURRENT	LOW-LEVEL OUTPUT CURRENT	POWER (TYP)	DELAY (TYP)
37	4.8 mA	−1.2 mA	27 mW	10.5 ns
SN54ALS'	12 mA	−1 mA	3.04 mW	4 ns
SN74ALS'	24 mA	−2.6 mA	3.04 mW	4 ns
SN54LS'	12 mA	−1.2 mA	4.3 mW	12 ns
SN74LS'	24 mA	−1.2 mA	4.3 mW	12 ns
'S37	60 mA	−3 mA	41 mW	4 ns

SN5437 (J,FH) SN7437 (J,N)
SN54ALS37A (J,FH) SN74ALS37A (N,FN)
SN54LS37 (J,FH) SN74LS37 (J,N,FN)
SN54S37 (J,FH) SN74S37 (J,N,FN)

logic symbol†

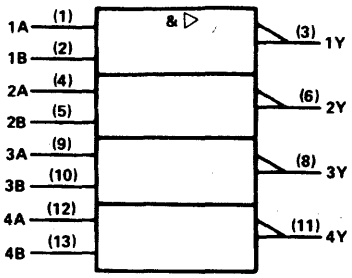

positive logic: $Y = \overline{AB}$

pin assignments

J, N PACKAGES				FH, FN PACKAGES			
1	1A	8	3Y	1	nc	11	nc
2	1B	9	3A	2	1A	12	3Y
3	1Y	10	3B	3	1B	13	3A
4	2A	11	4Y	4	1Y	14	3B
5	2B	12	4A	5	nc	15	nc
6	2Y	13	4B	6	2A	16	4Y
7	GND	14	V_{CC}	7	nc	17	nc
				8	2B	18	4A
				9	2Y	19	4B
				10	GND	20	V_{CC}

38

QUADRUPLE 2-INPUT POSITIVE-NAND BUFFERS WITH OPEN-COLLECTOR OUTPUTS

performance

TYPE	HIGH-LEVEL OUTPUT VOLTAGE	LOW-LEVEL OUTPUT CURRENT	POWER (TYP)	DELAY (TYP)
'38	5.5 V	48 mA	24.4 mW	12.5 ns
SN54ALS'	5.5 V	12 mA	3.04 mW	14.5 ns
SN74ALS'	5.5 V	24 mA	3.04 mW	14.5 ns
SN54ALS'	5.5 V	12 mA	4.3 mW	19 ns
SN74ALS'	5.5 V	24 mA	4.3 mW	19 ns
'S38	5.5 V	60 mA	41 mW	6.5 ns

SN5438 (J,FH) SN7438 (J,N)
SN54ALS38A (J,FH) SN74ALS38A (N,FN)
SN54LS38 (J,FH) SN74LS38 (J,N,FN)
SN54S38 (J,FH) SN74S38 (J,N,FN)

logic symbol†

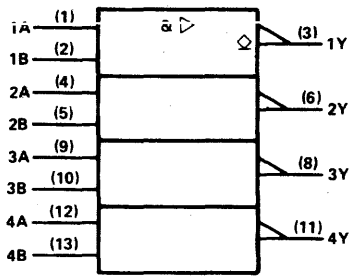

positive logic: $Y = \overline{AB}$

pin assignments

J, N PACKAGES				FH, FN PACKAGES			
1	1A	8	3Y	1	nc	11	nc
2	1B	9	3A	2	1A	12	3Y
3	1Y	10	3B	3	1B	13	3A
4	2A	11	4Y	4	1Y	14	3B
5	2B	12	4A	5	nc	15	nc
6	2Y	13	4B	6	2A	16	4Y
7	GND	14	V_{CC}	7	nc	17	nc
				8	2B	18	4A
				9	2Y	19	4B
				10	GND	20	V_{CC}

39

QUADRUPLE 2-INPUT POSITIVE-NAND BUFFERS WITH OPEN-COLLECTOR OUTPUTS

performance

TYPE	HIGH-LEVEL OUTPUT VOLTAGE	LOW-LEVEL OUTPUT CURRENT	POWER (TYP)	DELAY (TYP)
SN5439	5.5 V	60 mA	24.4 mW	12.5 ns
SN7439	5.5 V	80 mA	24.4 mW	12.5 ns

SN5439 (J,FH) SN7439 (J,N)

logic symbol†

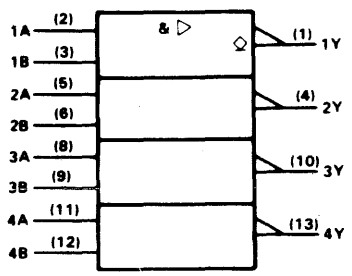

positive logic: $Y = \overline{AB}$

pin assignments

J, N PACKAGES				FH PACKAGE			
1	1Y	8	3A	1	nc	11	nc
2	1A	9	3B	2	1Y	12	3A
3	1B	10	3Y	3	1A	13	3B
4	2Y	11	4A	4	1B	14	3Y
5	2A	12	4B	5	nc	15	nc
6	2B	13	4Y	6	2Y	16	4A
7	GND	14	V_{CC}	7	nc	17	nc
				8	2A	18	4B
				9	2B	19	4Y
				10	GND	20	V_{CC}

nc — no internal connection.
†Pin numbers shown on logic symbols are for J and N packages only.

Copyright © 1983 by Texas Instruments Incorporated.

40

DUAL 4-INPUT POSITIVE NAND BUFFERS

performance

TYPE	HIGH-LEVEL OUTPUT VOLTAGE	LOW-LEVEL OUTPUT CURRENT	POWER (TYP)	DELAY (TYP)
'40	48 mA	−1.2 mA	26 mW	10.5 ns
SN54ALS'	12 mA	−1 mA	3.04 mW	4 ns
SN74ALS'	24 mA	−2.6 mA	3.04 mW	4 ns
'H40	60 mA	−1.5 mA	44 mW	7.5 ns
SN54LS'	12 mA	−1.2 mA	4.3 mW	12 ns
SN74LS'	24 mA	−1.2 mA	4.3 mW	12 ns
'S40	60 mA	−3 mA	44 mW	4 ns

SN5440 (J,FH) SN7440 (J,N)
SN54ALS40A (J,FH) SN74ALS40A (N,FN)
SN54H40 (J) SN74H40 (J,N)
SN54LS40 (J,FH) SN74LS40 (J,N,FN)
SN54S40 (J,FH) SN74S40 (J,N,FN)

logic symbol†

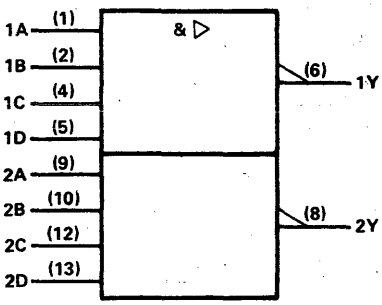

positive logic: $Y = \overline{ABCD}$

pin assignments

J, N PACKAGES				FH, FN PACKAGES			
1	1A	8	2Y	1	nc	11	nc
2	1B	9	2A	2	1A	12	2Y
3	nc	10	2B	3	1B	13	2A
4	1C	11	nc	4	nc	14	2B
5	1D	12	2C	5	nc	15	nc
6	1Y	13	2D	6	1C	16	nc
7	GND	14	V_{CC}	7	nc	17	nc
				8	1D	18	2C
				9	1Y	19	2D
				10	GND	20	V_{CC}

42

4-LINE TO 10-LINE DECODERS

(BCD to decimal)

typical performance

TYPE	SELECT TIME	POWER
'42A	17 ns	140 mW
'L42	34 ns	70 mW
'LS42	17 ns	35 mW

SN5442A (J,FH) SN7442A (J,N)
SN54L42 (J)
SN54LS42 (J,FH) SN74LS42 (J,N,FN)

logic symbol†

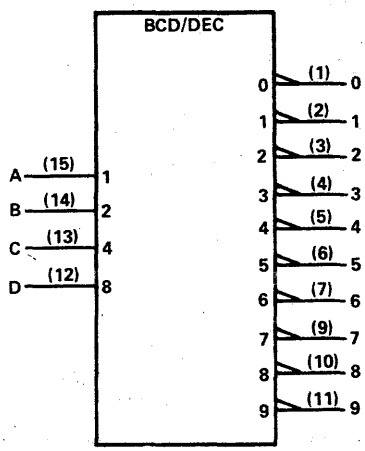

pin assignments

J, N PACKAGES				FH, FN PACKAGES			
1	0	9	7	1	nc	11	nc
2	1	10	8	2	0	12	7
3	2	11	9	3	1	13	8
4	3	12	D	4	2	14	9
5	4	13	C	5	3	15	D
6	5	14	B	6	nc	16	nc
7	6	15	A	7	4	17	C
8	GND	16	V_{CC}	8	5	18	B
				9	6	19	A
				10	GND	20	V_{CC}

† Pin numbers shown on logic symbols are for J and N packages only.
nc — no internal connection.

Copyright © 1983 by Texas Instruments Incorporated.

43

4-LINE TO 10-LINE DECODERS (EXCESS 3 TO DECIMAL)

SN5443A (J,FH)
SN54L43 (J)

SN7443A (J,N)

typical performance

TYPE	SELECT TIME	POWER
'43A	17 ns	140 mW
'L43	34 ns	70 mW

logic symbol†

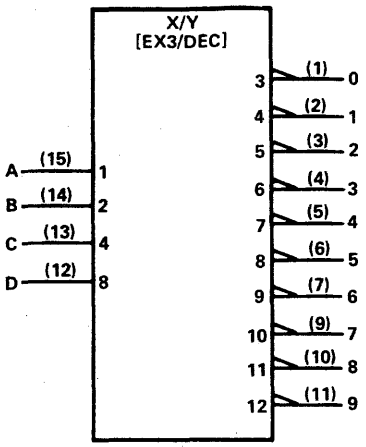

pin assignments

J, N PACKAGES				FH PACKAGE			
1	0	9	7	1	nc	11	nc
2	1	10	8	2	0	12	7
3	2	11	9	3	1	13	8
4	3	12	D	4	2	14	9
5	4	13	C	5	3	15	D
6	5	14	B	6	nc	16	nc
7	6	15	A	7	4	17	C
8	GND	16	V_{CC}	8	5	18	B
				9	6	19	A
				10	GND	20	V_{CC}

44

4-LINE TO 10-LINE DECODERS (EXCESS 3-GRAY TO DECIMAL)

SN5444A (J,FH)
SN54L44 (J)

SN7444A (J,N)

typical performance

TYPE	SELECT TIME	POWER
'44A	17 ns	140 mW
'L44	34 ns	70 mW

logic symbol†

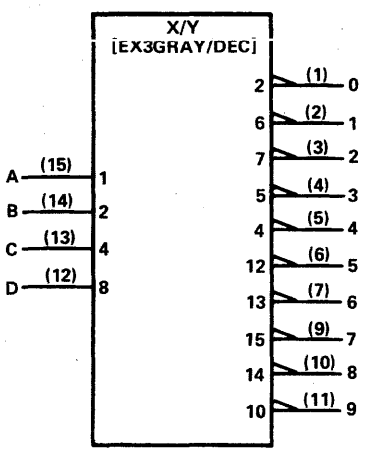

pin assignments

J, N PACKAGES				FH PACKAGE			
1	0	9	7	1	nc	11	nc
2	1	10	8	2	0	12	7
3	2	11	9	3	1	13	8
4	3	12	D	4	2	14	9
5	4	13	C	5	3	15	D
6	5	14	B	6	nc	16	nc
7	6	15	A	7	4	17	C
8	GND	16	V_{CC}	8	5	18	B
				9	6	19	A
				10	GND	20	V_{CC}

45

BCD-TO-DECIMAL DECODER/DRIVER

SN5445 (J,FH)

SN7445 (J,N)

typical performance

TYPE	OFF-STATE OUTPUT VOLTAGE	POWER
'45	30 V	215 mW

logic symbol†

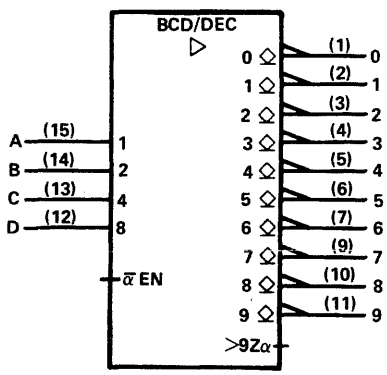

pin assignments

J, N PACKAGES				FH PACKAGE			
1	0	9	7	1	nc	11	nc
2	1	10	8	2	0	12	7
3	2	11	9	3	1	13	8
4	3	12	D	4	2	14	9
5	4	13	C	5	3	15	D
6	5	14	B	6	nc	16	nc
7	6	15	A	7	4	17	C
8	GND	16	V_{CC}	8	5	18	B
				9	6	19	A
				10	GND	20	V_{CC}

† Pin numbers shown on logic symbols are for J and N packages only.
nc — no internal connection.

Copyright © 1983 by Texas Instruments Incorporated.

TEXAS INSTRUMENTS
POST OFFICE BOX 225012 • DALLAS, TEXAS 75265

© IC MASTER 1984

46,47

BCD-TO-SEVEN-SEGMENT DECODERS/DRIVERS (46 - 30 V OUTPUTS 47 - 15 V OUTPUTS)

typical performance

TYPE	OFF-STATE OUTPUT VOLTAGE	POWER
'46A	30 V	320 mW
'L46	30 V	133 mW
'47A	15 V	320 mW
'L47	15 V	133 mW
'LS47	15 V	35 mW

SN5446A (J,FH) SN7446A (J,N)
SN54L46 (J)
SN5447A (J,FH) SN7447A (J,N)
SN54L47 (J)
SN54LS47(J,FH) SN74LS47 (J,N,FN)

logic symbol†

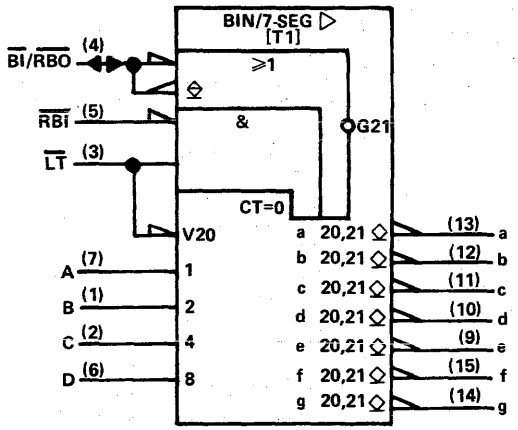

pin assignments

J, N PACKAGES				FH, FN PACKAGES			
1	B	9	e	1	nc	11	nc
2	C	10	d	2	B	12	e
3	LT	11	c	3	C	13	d
4	BI/RBO	12	b	4	LT	14	c
5	RBI	13	a	5	BI/RBO	15	b
6	D	14	g	6	nc	16	nc
7	A	15	f	7	RBI	17	a
8	GND	16	V_{CC}	8	D	18	g
				9	A	19	f
				10	GND	20	V_{CC}

48

BCD-TO-SEVEN-SEGMENT DECODERS/DRIVERS

typical performance

TYPE	OFF-STATE OUTPUT VOLTAGE	POWER
'48	5.5 V	265 mW
'LS48	5.5 V	125 mW

SN5448 (J,FH) SN7448 (J,N)
SN54LS48 (J,FH) SN74LS48 (J,N,FN)

logic symbol†

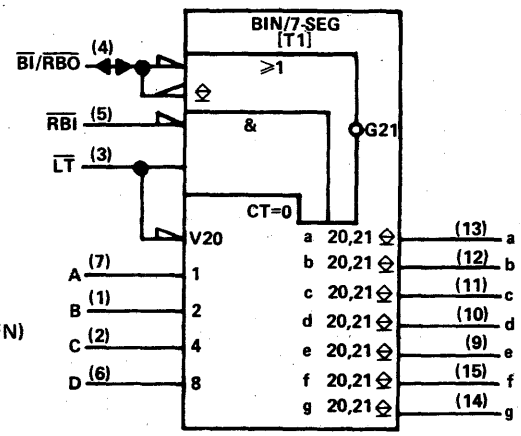

pin assignments

J, N PACKAGES				FH, FN PACKAGES			
1	B	9	e	1	nc	11	nc
2	C	10	d	2	B	12	e
3	LT	11	c	3	C	13	d
4	BI/RBO	12	b	4	LT	14	c
5	RBI	13	a	5	BI/RBO	15	b
6	D	14	g	6	nc	16	nc
7	A	15	f	7	RBI	17	a
8	GND	16	V_{CC}	8	D	18	g
				9	A	19	f
				10	GND	20	V_{CC}

49

BCD TO SEVEN SEGMENT DECODERS/DRIVERS (OPEN-COLLECTOR OUTPUTS)

typical performance

TYPE	OFF-STATE OUTPUT VOLTAGE	POWER
'49	5.5 V	165 mW
'LS49	5.5 V	40 mW

SN5449 (J,FH) SN7449 (J,N)
SN54LS49 (J,FH) SN74LS49 (J,N,FN)

logic symbol†

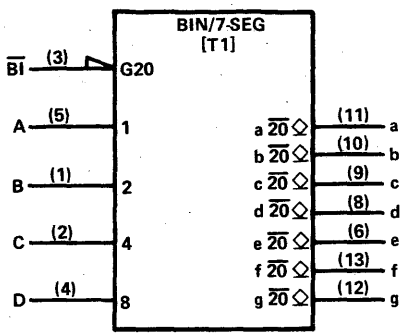

pin assignments

J, N PACKAGES				FH, FN PACKAGES			
1	B	8	d	1	nc	11	nc
2	C	9	c	2	B	12	d
3	BI	10	b	3	C	13	c
4	D	11	a	4	BI	14	b
5	A	12	g	5	nc	15	nc
6	e	13	f	6	D	16	a
7	GND	14	V_{CC}	7	nc	17	nc
				8	A	18	g
				9	e	19	f
				10	GND	20	V_{CC}

† Pin numbers shown on logic symbols are for J and N packages only.
nc — no internal connection.

FONT TABLE T1 — FOR '46, '47, '48, '49

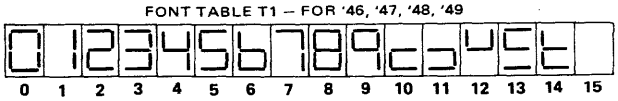

Copyright © 1983 by Texas Instruments Incorporated.

50

DUAL 2-WIDE 2-INPUT AND-OR-INVERT GATES (ONE GATE EXPANDABLE)

SN5450 (J,FH) SN7450 (J,N)
SN54H50 (J) SN74H50 (J,N)

typical performance

TYPE	POWER	DELAY
'50	14 mW	10.5 ns
'H50	29 mW	6.5 ns

logic symbol†

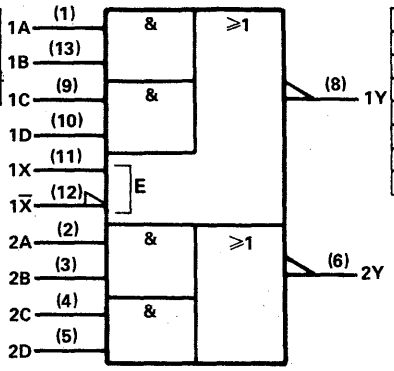

pin assignments

J, N PACKAGES			
1	1A	8	1Y
2	2A	9	1C
3	2B	10	1D
4	2C	11	1X
5	2D	12	1X̄
6	2Y	13	1B
7	GND	14	V_{CC}

FH PACKAGE			
1	nc	11	nc
2	1A	12	1Y
3	2A	13	1C
4	2B	14	1D
5	nc	15	nc
6	2C	16	1X
7	nc	17	nc
8	2D	18	1X̄
9	2Y	19	1B
10	GND	20	V_{CC}

positive logic: $Y = \overline{AB+CD+X}$
'50: X = output of SN5460/SN7460
'H50: X = output of SN54H60/SN74H60 or SN54H62/SN74H62

51

AND-OR INVERT GATES

SN5451 (J,FH) SN7451 (J,N)
SN54H51 (J) SN74H51 (J,N)
SN54L51 (J)
SN54LS51 (J,FH) SN74LS51 (J,N,FN)
SN54S51 (J,FH) SN74S51 (J,N,FN)

typical performance

TYPE	POWER	DELAY
'51	14 mW	10.5 ns
'H51	29 mW	65 ns
'L51	1.5 mW	43 ns
'LS51	2.75 mW	12.5 ns
'S51	28 mW	3.5 ns

logic symbol, '51, 'H51, 'S51†

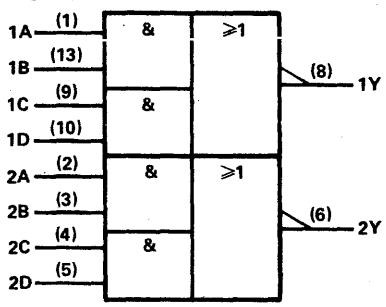

positive logic: $Y = \overline{AB+CD}$

pin assignments, '51, 'H51, 'S51

J, N PACKAGES			
1	1A	8	1Y
2	2A	9	1C
3	2B	10	1D
4	2C	11	nu
5	2D	12	nu
6	2Y	13	1B
7	GND	14	V_{CC}

FH, FN PACKAGES			
1	nc	11	nc
2	1A	12	1Y
3	2A	13	1C
4	2B	14	1D
5	nc	15	nc
6	2C	16	nu
7	nc	17	nc
8	2D	18	nu
9	2Y	19	1B
10	GND	20	V_{CC}

logic symbol, 'L51, 'LS51†

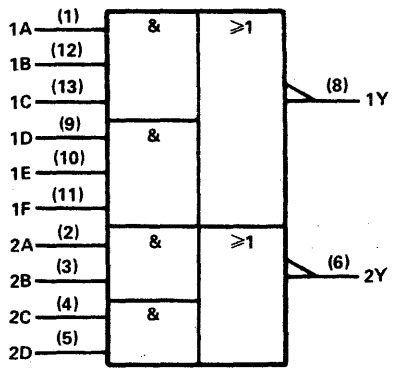

positive logic:

$1Y = \overline{(1A \cdot 1B \cdot 1C)+(1D \cdot 1E \cdot 1F)}$

$2Y = \overline{(2A \cdot 2B)+(2C \cdot 2D)}$

pin assignments, 'L51, 'LS51

J, N PACKAGES			
1	1A	8	1Y
2	2A	9	1D
3	2B	10	1E
4	2C	11	1F
5	2D	12	1B
6	2Y	13	1C
7	GND	14	V_{CC}

FH, FN PACKAGES			
1	nc	11	nc
2	1A	12	1Y
3	2A	13	1D
4	2B	14	1E
5	nc	15	nc
6	2C	16	1F
7	nc	17	nc
8	2D	18	1B
9	2Y	19	1C
10	GND	20	V_{CC}

† Pin numbers shown on logic symbols are for J and N packages only.
nc — no internal connection.
nu — make no external connection.

Copyright © 1983 by Texas Instruments Incorporated.

52

EXPANDABLE 4-WIDE AND-OR GATES

SN54H52 (J,FH) SN74H52 (J,N)

typical performance

TYPE	POWER	DELAY
'H52	88 mW	9.9 ns

logic symbol†

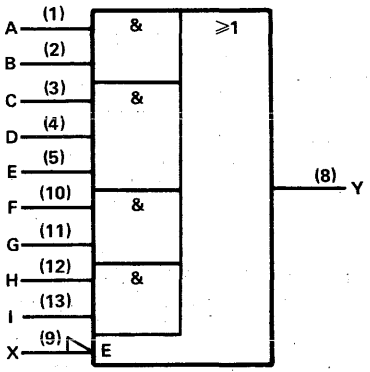

pin assignments

J, N PACKAGES			
1	A	8	Y
2	B	9	X
3	C	10	F
4	D	11	G
5	E	12	H
6	nc	13	I
7	GND	14	V_{CC}

FH PACKAGE			
1	nc	11	nc
2	A	12	Y
3	B	13	X
4	C	14	F
5	nc	15	nc
6	D	16	G
7	nc	17	nc
8	E	18	H
9	nc	19	I
10	GND	20	V_{CC}

positive logic: $Y = AB+CDE+FG+HI+X$

X = output of SN54H61/SN74H61

53

EXPANDABLE 4-WIDE AND-OR-INVERT GATES

SN5453 (J,FH) SN7453 (J,N)
SN54H53 (J) SN74H53 (J,N)

typical performance

TYPE	POWER	DELAY
'53	23 mW	10.5 ns
'H53	41 mW	6.6 ns

logic symbol, '53†

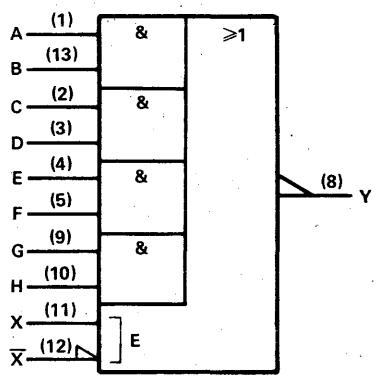

pin assignments, '53

J, N PACKAGES			
1	A	8	Y
2	C	9	G
3	D	10	H
4	E	11	X
5	F	12	$\overline{X}$
6	nc	13	B
7	GND	14	V_{CC}

FH PACKAGE			
1	nc	11	nc
2	A	12	Y
3	C	13	G
4	D	14	H
5	nc	15	nc
6	E	16	X
7	nc	17	nc
8	F	18	$\overline{X}$
9	nc	19	B
10	GND	20	V_{CC}

positive logic: $Y = \overline{AB+CD+EF+GH+X}$

X = output of SN5460/SN7460

logic symbol, 'H53†

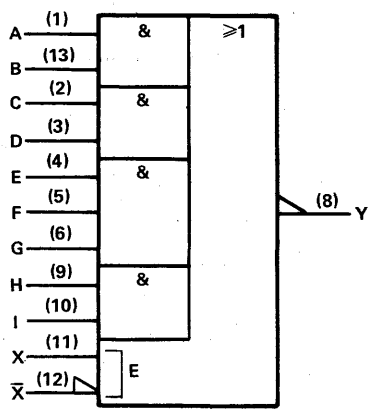

pin assignments, 'H53

J, N PACKAGES			
1	A	8	Y
2	C	9	H
3	D	10	I
4	E	11	X
5	F	12	$\overline{X}$
6	G	13	B
7	GND	14	V_{CC}

positive logic: $Y = \overline{AB+CD+EFG+HI+X}$

X = output of SN54H60/SN74H60 or SN54H62/SN74H62

† Pin numbers shown on logic symbols are for J and N packages only.
nc — no internal connection.

Copyright © 1983 by Texas Instruments Incorporated.

54

4-WIDE AND-OR-INVERT GATES

typical performance

TYPE	POWER	DELAY
'54	23 mW	10.5 ns
'H54	41 mW	6.6 ns
'L54	1.5 mW	43 ns
'LS54	4.5 mW	12.5 ns

SN5454 (J,FH) SN7454 (J,N)
SN54H54 (J) SN74H54 (J,N)
SN54L54 (J)
SN54LS54 (J,FH) SN74LS54 (J,N,FN)

logic symbol, '54†

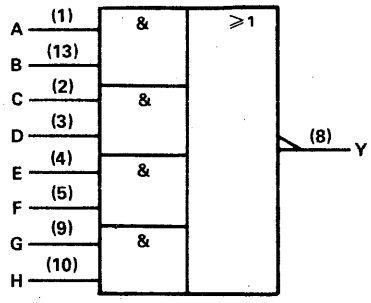

positive logic: $Y = \overline{AB+CD+EF+GH}$

logic symbol, 'H54†

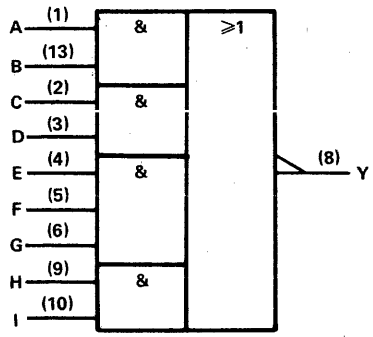

positive logic: $Y = \overline{AB+CD+EFG+HI}$

logic symbol, 'L54, 'LS54†

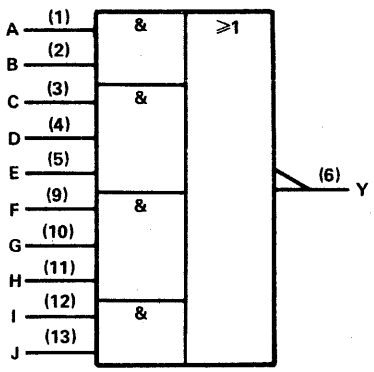

positive logic: $Y = \overline{AB+CDE+FGH+IJ}$

pin assignments, '54

J, N PACKAGES				FH PACKAGE			
1	A	8	Y	1	nc	11	nc
2	C	9	G	2	A	12	Y
3	D	10	H	3	C	13	G
4	E	11	nu	4	D	14	H
5	F	12	nu	5	nc	15	nc
6	nc	13	B	6	E	16	nu
7	GND	14	V_{CC}	7	nc	17	nc
				8	F	18	nu
				9	nc	19	B
				10	GND	20	V_{CC}

pin assignments, 'H54

J, N PACKAGES			
1	A	8	Y
2	C	9	H
3	D	10	I
4	E	11	nu
5	F	12	nu
6	G	13	B
7	GND	14	V_{CC}

pin assignments, 'L54, 'LS54

J, N PACKAGES				FH, FN PACKAGES			
1	A	8	nc	1	nc	11	nc
2	B	9	F	2	A	12	nc
3	C	10	G	3	B	13	F
4	D	11	H	4	C	14	G
5	E	12	I	5	nc	15	nc
6	Y	13	J	6	D	16	H
7	GND	14	V_{CC}	7	nc	17	nc
				8	E	18	I
				9	Y	19	J
				10	GND	20	V_{CC}

† Pin numbers shown on logic symbols are for J and N packages only.
nc — no internal connection.
nu — make no external connection.

Copyright © 1983 by Texas Instruments Incorporated.

55

2-WIDE 4-INPUT AND-OR-INVERT GATES

typical performance

TYPE	POWER	DELAY
'H55	30 mW	6.8 ns
'L55	1.5 mW	43 ns
'LS55	2.75 mW	12.5 ns

SN54H55 (J) SN74H55 (J,N)
SN54L55 (J)
SN54LS55 (J,FH) SN74LS55 (J,N,FN)

X = Output of SN54H60/SN74H60 or SN54H62/SN74H62

logic symbol, 'H55†

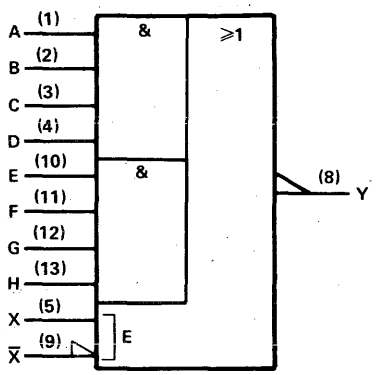

positive logic: $Y = \overline{ABCD+EFGH+X}$

pin assignments, 'H55

J, N PACKAGES			
1	A	8	Y
2	B	9	$\overline{X}$
3	C	10	E
4	D	11	F
5	X	12	G
6	nc	13	H
7	GND	14	V_{CC}

logic symbol, 'L55, 'LS55†

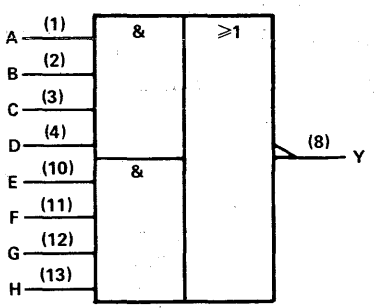

positive logic: $Y = \overline{ABCD+EFGH}$

pin assignments, 'L55, 'LS55

J, N PACKAGES				FH, FN PACKAGES			
1	A	8	Y	1	nc	11	nc
2	B	9	nc	2	A	12	Y
3	C	10	E	3	B	13	nc
4	D	11	F	4	C	14	E
5	nc	12	G	5	nc	15	nc
6	nc	13	H	6	D	16	F
7	GND	14	V_{CC}	7	nc	17	nc
				8	nc	18	G
				9	nc	19	H
				10	GND	20	V_{CC}

56

50-TO-1 FREQUENCY DIVIDER

typical performance

TYPE	CLOCK FREQUENCY	CLEAR	POWER
'LS56	25 MHz	HIGH	85 mW

SN54LS56 (JG) SN74LS56 (JG,P)

logic symbol†

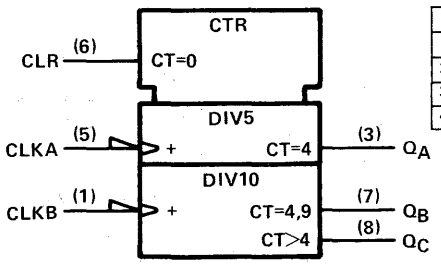

pin assignments

JG, P PACKAGES			
1	CLKB	5	CLKA
2	V_{CC}	6	CLR
3	Q_A	7	Q_B
4	GND	8	Q_C

For chip carrier information, contact the factory.

†Pin numbers shown on logic symbols are for J, JG, N, and P packages only.
nc — no internal connection.

Copyright © 1983 by Texas Instruments Incorporated.

57

60-TO-1 FREQUENCY DIVIDER

typical performance

TYPE	CLOCK FREQUENCY	CLEAR	POWER
'LS57	25 MHz	HIGH	85 mW

SN54LS57 (JG) SN54LS57 (JG, P)

logic symbol†

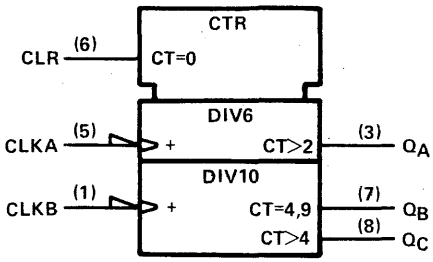

pin assignments

JG, P PACKAGES			
1	CLKB	5	CLKA
2	V_{CC}	6	CLR
3	Q_A	7	Q_B
4	GND	8	Q_C

60

DUAL 4-INPUT EXPANDERS

SN5460 (J) SN7460 (J,N)
SN54H60 (J) SN74H60 (J,N)

typical performance

TYPE	POWER
'60	4 mW
'H60	6 mW

'60 positive logic:
X = ABCD when connected to X and $\overline{X}$ inputs of SN5423/SN7423, SN5450/SN7450, or SN5453/SN7453
'H60 positive logic:
X = ABCD when connected to X and $\overline{X}$ inputs of SN54H50/SN74H50, SN54H53/SN74H53, or SN54H55/SN74H55

logic symbol†

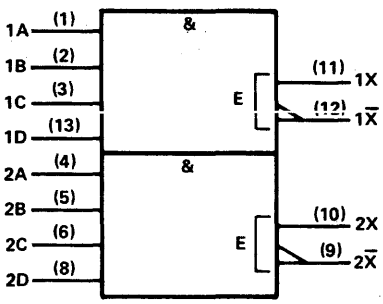

pin assignments

J, N PACKAGES			
1	1A	8	2D
2	1B	9	$2\overline{X}$
3	1C	10	2X
4	2A	11	1X
5	2B	12	$1\overline{X}$
6	2C	13	1D
7	GND	14	V_{CC}

61

TRIPLE 3-INPUT EXPANDERS

SN54H61 (J) SN74H61 (J,N)

typical performance

TYPE	POWER
'H61	13 mW

positive logic:
X = ABC when connected to X input of SN54H52/SN74H52

logic symbol†

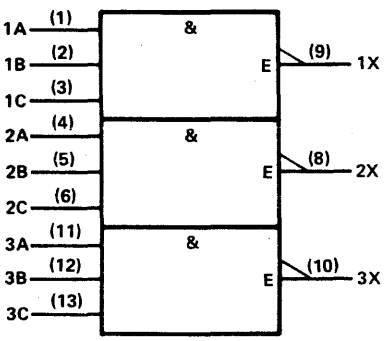

pin assignments

J, N PACKAGES			
1	1A	8	2X
2	1B	9	1X
3	1C	10	3X
4	2A	11	3A
5	2B	12	3B
6	2C	13	3C
7	GND	14	V_{CC}

† Pin numbers shown on logic symbols are for J, JG, N, and P packages only.
nc — no internal connection.

Copyright © 1983 by Texas Instruments Incorporated.

62

4-WIDE AND-OR EXPANDERS

SN54H62 (J) SN74H62 (J,N)

typical performance

TYPE	POWER
'H62	25 mW

logic symbol†

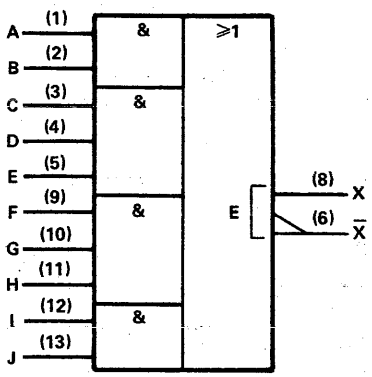

pin assignments

J, N PACKAGES			
1	A	8	X
2	B	9	F
3	C	10	G
4	D	11	H
5	E	12	I
6	X̄	13	J
7	GND	14	V_{CC}

63

HEX CURRENT-SENSING INTERFACE GATES

SN54LS63 (J,FH) SN74LS63 (J,N,FN)

typical performance

TYPE	POWER	DELAY
'LS63	3.3 mW	21 ns

logic symbol†

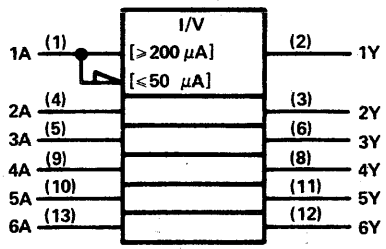

pin assignments

J, N PACKAGES				FH, FN PACKAGES			
1	1A	8	4Y	1	nc	11	nc
2	1Y	9	4A	2	1A	12	4Y
3	2Y	10	5A	3	1Y	13	4A
4	2A	11	5Y	4	2Y	14	5A
5	3A	12	6Y	5	nc	15	nc
6	3Y	13	6A	6	2A	16	5Y
7	GND	14	V_{CC}	7	nc	17	nc
				8	3A	18	6Y
				9	3Y	19	6A
				10	GND	20	V_{CC}

64,65

4-2-3-2 INPUT AND-OR-INVERT GATES

typical performance

TYPE	OUTPUT	POWER	DELAY
'S64	TOTEM POLE	29 mW	3.5 ns
'S65	OPEN-COLLECTOR	36 mW	5.5 ns

SN54S64 (J,FH) SN74S64 (J,N,FN)
SN54S65 (J,FH) SN74S65 (J,N,FN)

logic symbol, 'S64†

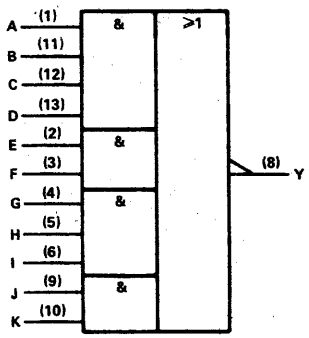

logic symbol, 'S65†

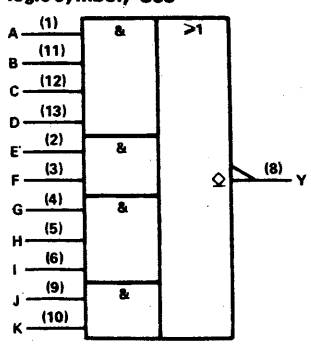

pin assignments

J, N PACKAGES				FH, FN PACKAGES			
1	A	8	Y	1	nc	11	nc
2	E	9	J	2	A	12	Y
3	F	10	K	3	E	13	J
4	G	11	B	4	F	14	K
5	H	12	C	5	nc	15	nc
6	I	13	D	6	G	16	B
7	GND	14	V_{CC}	7	nc	17	nc
				8	H	18	C
				9	I	19	D
				10	GND	20	V_{CC}

positive logic: $Y = \overline{ABCD+EF+GHI+JK}$

† Pin numbers shown on logic symbols are for J and N packages only.
nc — no internal connection.

DIGITAL

Texas Instruments

Copyright © 1983 by Texas Instruments Incorporated.

TEXAS INSTRUMENTS
POST OFFICE BOX 225012 • DALLAS, TEXAS 75265

68

DUAL 4-BIT DECADE COUNTER

- High-drive outputs (I_{OL} rated at 8 mA/16 mA)

typical performance

COUNT FREQUENCY	CLEAR	POWER DISSIPATION
60 MHz	LOW	180 mW

SN54LS68 (J,FH) SN74LS68 (J,N,FN)

logic symbol†

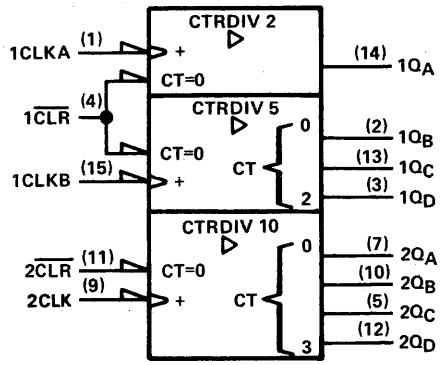

pin assignments

J, N PACKAGES			
1	1CLKA	9	2CLK
2	$1Q_B$	10	$2Q_B$
3	$1Q_D$	11	$2\overline{CLR}$
4	$1\overline{CLR}$	12	$2Q_D$
5	$2Q_C$	13	$1Q_C$
6	nc	14	$1Q_A$
7	$2Q_A$	15	1CLKB
8	GND	16	V_{CC}

FH, FN PACKAGES			
1	nc	11	nc
2	1CLKA	12	2CLK
3	$1Q_B$	13	$2Q_B$
4	$1Q_D$	14	$2\overline{CLR}$
5	$1\overline{CLR}$	15	$2Q_D$
6	nc	16	nc
7	$2Q_C$	17	$1Q_C$
8	nc	18	$1Q_A$
9	$2Q_A$	19	1CLKB
10	GND	20	V_{CC}

nc – no internal connection

69

DUAL 4-BIT BINARY COUNTER

- High-drive outputs (I_{OL} rated at 8 mA/16 mA)

typical performance

COUNT FREQUENCY	CLEAR	POWER DISSIPATION
70 MHz	LOW	180 mW

SN54LS69 (J,FH) SN74LS69 (J,N,FN)

logic symbol†

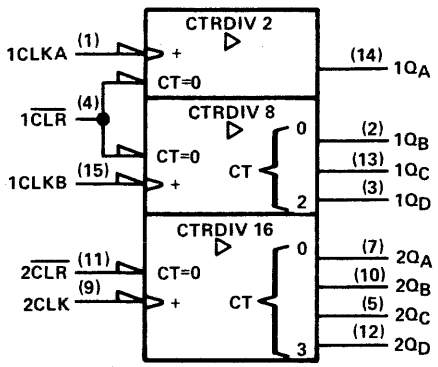

pin assignments

J, N PACKAGES			
1	1CLKA	9	2CLK
2	$1Q_B$	10	$2Q_B$
3	$1Q_D$	11	$2\overline{CLR}$
4	$1\overline{CLR}$	12	$2Q_D$
5	$2Q_C$	13	$1Q_C$
6	nc	14	$1Q_A$
7	$2Q_A$	15	1CLKB
8	GND	16	V_{CC}

FH, FN PACKAGES			
1	nc	11	nc
2	1CLKA	12	2CLK
3	$1Q_B$	13	$2Q_B$
4	$1Q_D$	14	$2\overline{CLR}$
5	$1\overline{CLR}$	15	$2Q_D$
6	nc	16	nc
7	$2Q_C$	17	$1Q_C$
8	nc	18	$1Q_A$
9	$2Q_A$	19	1CLKB
10	GND	20	V_{CC}

nc – no internal connection

†Pin numbers shown on logic symbols are for J, JT and NT packages only.
nc — no internal connection.

Copyright © 1983 by Texas Instruments Incorporated.

70

AND-GATED J-K POSITIVE-EDGE-TRIGGERED FLIP-FLOPS

typical performance

TYPE	f_{max}	PWR/ FF	SET-UP	HOLD
'70	35 MHz	65 mW	20 ns↑	5 ns↑

↑ Rising edge of clock pulse.
↓ Falling edge of clock pulse.

SN5470 (J,FH) SN7470 (J,N)

logic symbol†

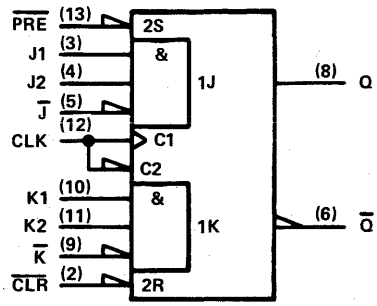

pin assignments

J, N PACKAGES			
1	nc	8	Q
2	CLR̄	9	K̄
3	J1	10	K1
4	J2	11	K2
5	J̄	12	CLK
6	Q̄	13	PRĒ
7	GND	14	V_{CC}

FH PACKAGE			
1	nc	11	nc
2	nc	12	Q
3	CLR̄	13	K̄
4	J1	14	K1
5	nc	15	nc
6	J2	16	K2
7	nc	17	nc
8	J̄	18	CLK
9	Q̄	19	PRĒ
10	GND	20	V_{CC}

positive logic: $J = J1 \cdot J2 \cdot \bar{J}$
$K = K1 \cdot K2 \cdot \bar{K}$
If inputs J̄ and K̄ are not used, they must be grounded.
Preset or clear function can occur only when the clock input is low.

71

'H71: AND-OR-GATED J-K MASTER-SLAVE FLIP-FLOPS WITH PRESET

typical performance

TYPE	f_{max}	PWR/ FF	SET-UP	HOLD
'H71	30 MHz	80 mW	0 ns↑	0 ns↓
'L71	30 MHz	3.8 mW	0 ns↑	0 ns↓

↑ Rising edge of clock pulse.
↓ Falling edge of clock pulse.

SN54H71 (J) SN74H71 (J,N)

logic symbol, 'H71†

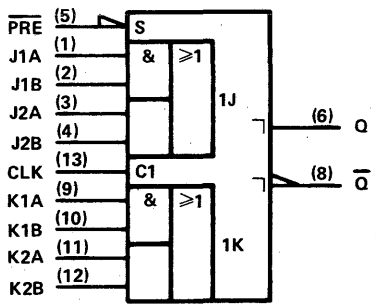

pin assignments, 'H71

J, N PACKAGES			
1	J1A	8	Q̄
2	J1B	9	K1A
3	J2A	10	K1B
4	J2B	11	K2A
5	PRĒ	12	K2B
6	Q	13	CLK
7	GND	14	V_{CC}

positive logic: $J = (J1A \cdot J1B) + (J2A \cdot J2B)$
$K = (K1A \cdot K1B) + (K2A \cdot K2B)$

'L71: AND-GATED R-S MASTER-SLAVE FLIP-FLOPS WITH PRESET AND CLEAR

SN54L71 (J)

logic symbol, 'L71†

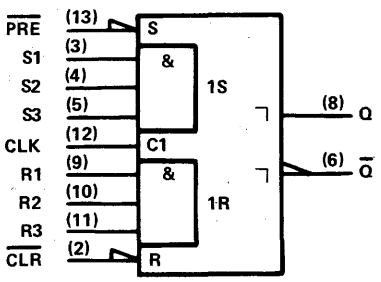

pin assignments, 'L71

J, N PACKAGES			
1	nc	8	Q
2	CLR̄	9	R1
3	S1	10	R2
4	S2	11	R3
5	S3	12	CLK
6	Q̄	13	PRĒ
7	GND	14	V_{CC}

positive logic: $R = R1 \cdot R2 \cdot R3$
$S = S1 \cdot S2 \cdot S3$

† Pin numbers shown on logic symbols are for J and N packages only.
nc — no internal connection.

Copyright © 1983 by Texas Instruments Incorporated.

72

AND-GATED J-K MASTER-SLAVE FLIP-FLOPS WITH PRESET AND CLEAR

typical performance

TYPE	f_{max}	PWR/ FF	SET-UP	HOLD
'72	20 MHz	50 mW	0 ns↑	0 ns↓
'H72	30 MHz	80 mW	0 ns↑	0 ns↓
'L72	3 MHz	3.8 mW	0 ns↑	0 ns↓

↑ Rising edge of clock pulse.
↓ Falling edge of clock pulse.

SN5472 (J,FH)
SN54H72 (J)
SN54L72 (J)
SN7472 (J)
SN74H72 (J)

logic symbol†

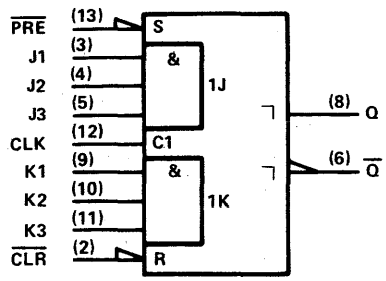

positive logic: J = J1·J2·J3; K1·K2·K3

pin assignments

J, N PACKAGES			
1	nc	8	Q
2	$\overline{CLR}$	9	K1
3	J1	10	K2
4	J2	11	K3
5	J3	12	CLK
6	Q̄	13	$\overline{PRE}$
7	GND	14	V_{CC}

FH PACKAGE			
1	nc	11	nc
2	nc	12	Q
3	$\overline{CLR}$	13	K1
4	J1	14	K2
5	nc	15	nc
6	J2	16	K3
7	nc	17	nc
8	J3	18	CLK
9	Q̄	19	$\overline{PRE}$
10	GND	20	V_{CC}

73

DUAL J-K FLIP-FLOPS WITH CLEAR

typical performance

TYPE	f_{max}	PWR/ F-F	SET-UP	HOLD
'73	20 MHz	5 mW	0 ns↑	0 ns↓
'H73	30 MHz	80 mW	0 ns↑	0 ns↓
'L73	3 MHz	3.8 mW	0 ns↑	0 ns↓
'LS73A	45 MHz	10 mW	20 ns↓	0 ns↓

↑ Rising edge of clock pulse.
↓ Falling edge of clock pulse.

SN5473 (J)
SN54H73 (J)
SN54L73 (J)
SN54LS73A (J
SN7473 (J,N)
SN74H73 (J,N)
SN74LS73A (J,N)

logic symbol' '73, 'H73, 'L73†

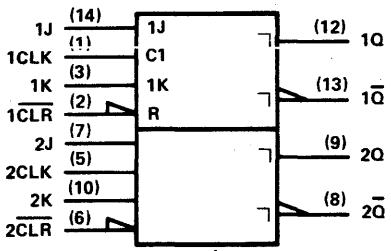

logic symbol, 'LS73A†

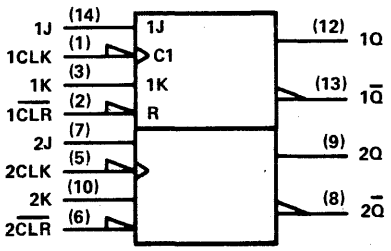

pin assignments

J, N PACKAGES			
1	1CLK	8	2Q̄
2	1$\overline{CLR}$	9	2Q
3	1K	10	2K
4	V_{CC}	11	GND
5	2CLK	12	1Q
6	2$\overline{CLR}$	13	1Q̄
7	2J	14	1J

For chip carrier information, contact the factory.

† Pin numbers shown on logic symbols are for J and N packages only.
nc — no internal connection.

Copyright © 1983 by Texas Instruments Incorporated.

TEXAS INSTRUMENTS
POST OFFICE BOX 225012 • DALLAS, TEXAS 75265

© IC MASTER 1984

74

DUAL D-TYPE POSITIVE-EDGE-TRIGGERED FLIP-FLOPS WITH PRESET AND CLEAR

logic symbol†

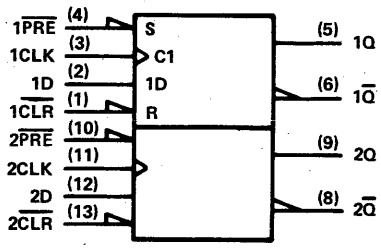

pin assignments

J, N PACKAGES				FH, FN PACKAGES			
1	1CLR	8	2Q̄	1	nc	11	nc
2	1D	9	2Q	2	1CLR	12	2Q̄
3	1CLK	10	2PRE	3	1D	13	2Q
4	1PRE	11	2CLK	4	1CLK	14	2PRE
5	1Q	12	2D	5	nc	15	nc
6	1Q̄	13	2CLR	6	1PRE	16	2CLK
7	GND	14	V_{CC}	7	nc	17	nc
				8	1Q	18	2D
				9	1Q̄	19	2CLR
				10	GND	20	V_{CC}

typical performance

TYPE	f_{max}	PWR/ F-F	SET-UP	HOLD
'74	25 MHz	43 mW	20 ns†	5 ns†
'ALS74	50 MHz	6 mW	15 ns†	0 ns†
'AS74	125 MHz	26 mW	4.5 ns†	0 ns†
'H74	43 MHz	75 mW	15 ns†	5 ns†
'L74	3 MHz	4 mW	50 ns†	15 ns†
'LS74A	33 MHz	10 mW	20 ns†	5 ns†
'S74	110 MHz	75 mW	3 ns†	2 ns†

† Rising edge of clock pulse.

SN5474 (J,FH)	SN7474 (J,N)
SN54ALS74 (J,FH)	SN74ALS74 (N,FN)
SN54AS74 (J,FH)	SN74AS74 (N,FN)
SN54H74 (J)	SN74H74 (J,N)
SN54L74 (J)	
SN54LS74A (J,FH)	SN74LS74A (J,N,FN)
SN54S74 (J,FH)	SN74S74 (J,N,FN)

† Pin numbers shown on logic symbols are for J and N packages only.
nc — no internal connection.

Copyright © 1983 by Texas Instruments Incorporated.

75

4-BIT BISTABLE LATCHES

typical performance

TYPE	OUT-PUTS	DELAY	TOTAL POWER
'75	Q,$\overline{Q}$	15 ns	160 mW
'L75	Q,$\overline{Q}$	30 ns	80 mW
'LS75	Q,$\overline{Q}$	11 ns	32 mW

SN5475 (J) SN7475 (J,N)
SN54L75 (J)
SN54LS75 (J) SN74LS75 (J,N)

logic symbol†

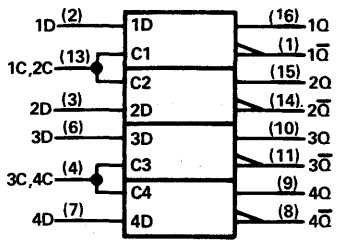

pin assignments

J, N PACKAGES			
1	1$\overline{Q}$	9	4Q
2	1D	10	3Q
3	2D	11	3$\overline{Q}$
4	3C,4C	12	GND
5	V_{CC}	13	1C,2C
6	3D	14	2$\overline{Q}$
7	4D	15	2Q
8	4$\overline{Q}$	16	1Q

For chip carrier information, contact the factory.

76

DUAL J-K FLIP-FLOPS WITH PRESET AND CLEAR

typical performance

TYPE	f_{max}	PWR/ F-F	SET-UP	HOLD
'76	20 MHz	50 mW	0 ns↑	0 ns↓
'H76	30 MHz	80 mW	0 ns↑	0 ns↓
'LS76A	45 MHz	10 mW	20 ns↓	0 ns↓

↑ Rising edge of clock pulse.
↓ Falling edge of clock pulse.

SN5476 (J) SN7476 (J,N)
SN54H76 (J) SN74H76 (J,N)
SN54LS76A (J) SN74LS76A (J,N)

logic symbol, '76, 'H76†

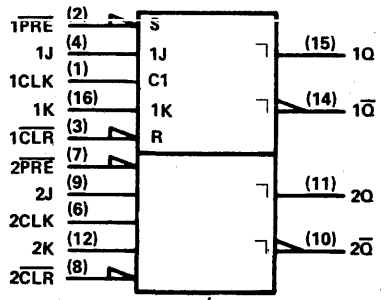

logic symbol, 'LS76A†

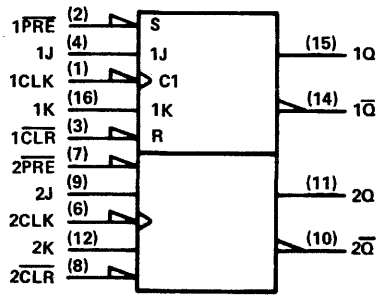

pin assignments

J, N PACKAGES			
1	1CLK	9	2J
2	1$\overline{PRE}$	10	2$\overline{Q}$
3	1$\overline{CLR}$	11	2Q
4	1J	12	2K
5	V_{CC}	13	GND
6	2CLK	14	1$\overline{Q}$
7	2$\overline{PRE}$	15	1Q
8	2$\overline{CLR}$	16	1K

For chip carrier information, contact the factory.

† Pin numbers shown on logic symbols are for J and N packages only.
nc — no internal connection.

Copyright © 1983 by Texas Instruments Incorporated.

77

4-BIT BISTABLE LATCHES

typical performance

OUT-PUTS	DELAY	TOTAL POWER
Q	15 ns	160 mW
Q	30 ns	80 mW
Q	10 ns	35 mW

SN5477 (J)
SN54L77 (J)
SN54LS77 (J) SN74LS77 (J,N)

logic symbol†

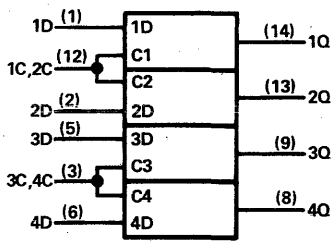

pin assignments

J, N PACKAGES			
1	1D	8	4Q
2	2D	9	3Q
3	3C,4C	10	nc
4	V_{CC}	11	GND
5	3D	12	1C,2C
6	4D	13	2Q
7	nc	14	1Q

For chip carrier information, contact the factory.

78

DUAL J-K FLIP-FLOPS WITH PRESET, COMMON CLEAR, AND COMMON CLOCK

typical performance

TYPE	f_{max}	PWR/ F-F	SET-UP	HOLD
'H78	30 MHz	80 mW	0 ns↑	0 ns↓
'L78	3 MHz	3.8 mW	0 ns↑	0 ns↓
'LS78A	45 MHz	10 mW	20 ns↓	0 ns↓

↑ Rising edge of clock pulse.
↓ Falling edge of clock pulse.

SN54H78 (J) SN74H78 (J,N)
SN54L78 (J)
SN54LS78A (J) SN74LS78A (J,N)

logic symbol, 'H78†

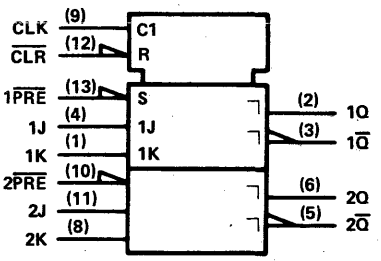

logic symbol, 'L78†

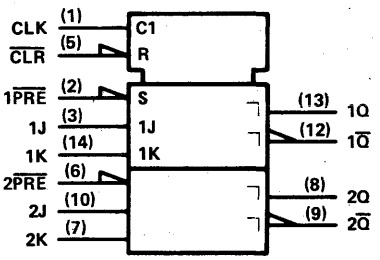

logic symbol, 'LS78A†

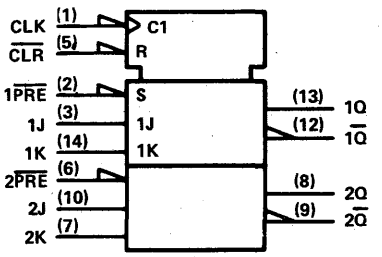

pin assignments, 'H78

J, N PACKAGES			
1	1K	8	2K
2	1Q	9	CLK
3	1Q̄	10	2PRE
4	1J	11	2J
5	2Q̄	12	CLR
6	2Q	13	1PRE
7	GND	14	V_{CC}

pin assignments, 'L78, 'LS78A

J, N PACKAGES			
1	CLK	8	2Q
2	1PRE	9	2Q̄
3	1J	10	2J
4	V_{CC}	11	GND
5	CLR	12	1Q̄
6	2PRE	13	1Q
7	2K	14	1K

For chip carrier information, contact the factory.

† Pin numbers shown on logic symbols are for J and N packages only.
nc — no internal connection.

Copyright © 1983 by Texas Instruments Incorporated.

TEXAS INSTRUMENTS
POST OFFICE BOX 225012 • DALLAS, TEXAS 75265

80

GATED FULL ADDERS

typical performance

TYPE	CARRY TIME	ADD TIME	POWER PER BIT
'80	10.5 ns	52 ns	105 mW

SN5480 (J,FH) SN7480 (J,N)

NOTES: 1. $A = \overline{A_C} + \overline{A^*} + A1 \cdot A2$, $B = \overline{B_C} + \overline{B^*} + B1 \cdot B2$

2. When A* is used as an input, A1 or A2 must be low. When B* is used as an input, B1 or B2 must be low.

3. When A1 and A2 or B1 and B2 are used as inputs, A* or B*, respectively, must be open or used to perform dot-AND logic.

logic symbol†

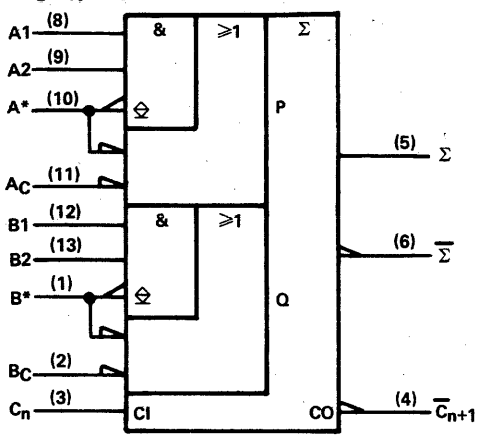

pin assignments

J, N PACKAGES				FH PACKAGE			
1	B*	8	A1	1	nc	11	nc
2	B_C	9	A2	2	B*	12	A1
3	C_n	10	A*	3	B_C	13	A2
4	$\overline{C_{n+1}}$	11	A_C	4	C_n	14	A*
5	Σ	12	B1	5	nc	15	nc
6	$\overline{\Sigma}$	13	B2	6	$\overline{C_{n+1}}$	16	A_C
7	GND	14	V_{CC}	7	nc	17	nc
				8	Σ	18	B1
				9	$\overline{\Sigma}$	19	B2
				10	GND	20	V_{CC}

81

16-BIT RANDOM-ACCESS MEMORIES

typical performance

TYPE	ADDRESS TIME	ENABLE TIME	POWER PER BIT
'81A	15 ns	15 ns	14 mW

SN5481A (J) SN7481A (J,N)

logic symbol†

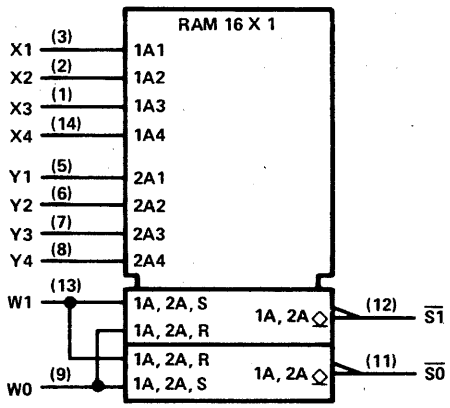

pin assignments

J, N PACKAGES			
1	X3	8	Y4
2	X2	9	W0
3	X1	10	GND
4	V_{CC}	11	$\overline{S0}$
5	Y1	12	$\overline{S1}$
6	Y2	13	W1
7	Y3	14	X4

82

2-BIT BINARY FULL ADDERS

typical performance

TYPE	CARRY TIME	ADD TIME	POWER PER BIT
'82	14.5 ns	25 ns	87 mW

SN5482 (J) SN7482 (J,N)

logic symbol†

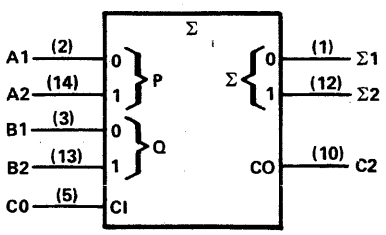

pin assignments

J, N PACKAGES			
1	Σ1	8	nc
2	A1	9	nc
3	B1	10	C2
4	V_{CC}	11	GND
5	C0	12	Σ2
6	nc	13	B2
7	nc	14	A2

For chip carrier information, contact the factory.

† Pin numbers shown on logic symbols are for J and N packages only.
nc — no internal connection.

Copyright © 1983 by Texas Instruments Incorporated.

83

4-BIT BINARY FULL ADDERS WITH FAST CARRY

typical performance

TYPE	CARRY TIME	ADD TIME	POWER PER BIT
'83A	10 ns	16 ns	76 mW
'LS83A	10 ns	15 ns	24 mW

SN5483A (J) SN7483A (J,N)
SN54LS83A (J) SN74LS83A (J,N)

logic symbol†

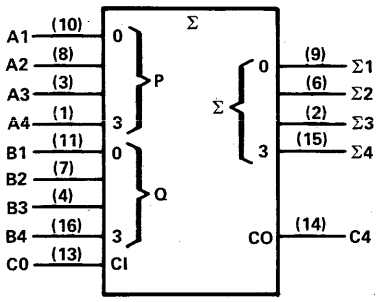

pin assignments

J, N PACKAGES			
1	A4	9	Σ1
2	ISI3	10	A1
3	A3	11	B1
4	B3	12	GND
5	V_{CC}	13	C0
6	Σ2	14	C4
7	B2	15	Σ4
8	A2	16	B4

For new chip carrier designs, use 'LS283 or 'S283.

84

16-BIT RANDOM-ACCESS MEMORIES

typical performance

TYPE	ADDRESS TIME	ENABLE TIME	POWER PER BIT
'84A	15 ns	15 ns	14 mW

SN5484A (J) SN7484A (J,N)

logic symbol†

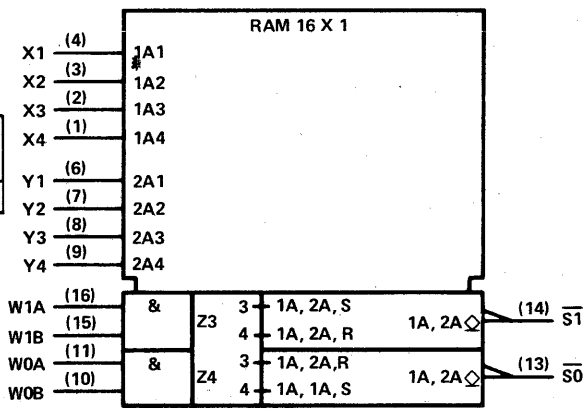

pin assignments

J, N PACKAGES			
1	X4	9	Y4
2	X3	10	W0B
3	X2	11	W0A
4	X1	12	GND
5	V_{CC}	13	$\overline{S0}$
6	Y1	14	$\overline{S1}$
7	Y2	15	W1B
8	Y3	16	W1A

† Pin numbers shown on logic symbols are for J and N packages only.
nc — no internal connection.

Copyright © 1983 by Texas Instruments Incorporated.

85

4-BIT MAGNITUDE COMPARATORS

typical performance

TYPE	COMPARE TIME	POWER
'85	21 ns	275 mW
'L85	82 ns	20 mW
'LS85	23.5 ns	52 mW
'S85	11.5 ns	365 mW

SN5485 (J,FH) SN7485 (J,N)
SN54L85 (J)
SN54LS85 (J,FH) SN74LS85 (J,N,FN)
SN54S85 (J,FH) SN74S85 (J,N,FN)

logic symbol, '85, 'LS85, 'S85†

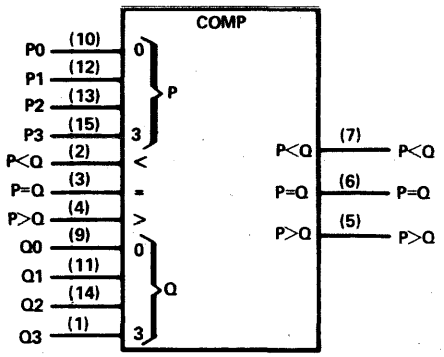

pin assignments, '85, 'LS85, 'S85

J, N PACKAGES				FH, FN PACKAGES			
1	Q3	9	Q0	1	nc	11	nc
2	P<Qin	10	P0	2	Q3	12	Q0
3	P=Qin	11	Q1	3	P<Qin	13	P0
4	P>Qin	12	P1	4	P=Qin	14	Q1
5	P>Qout	13	P2	5	P>Qin	15	P1
6	P=Qout	14	Q2	6	nc	16	nc
7	P<Qout	15	P3	7	P>Qout	17	P2
8	GND	16	V_{CC}	8	P=Qout	18	Q2
				9	P<Qout	19	P3
				10	GND	20	V_{CC}

logic symbol, 'L85†

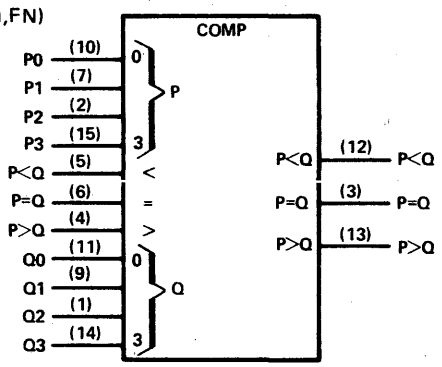

pin assignments, 'L85

J, N PACKAGES			
1	Q2	9	Q1
2	P2	10	P0
3	P=Qout	11	Q0
4	P>Qin	12	P<Qout
5	P<Qin	13	P>Qout
6	P=Qin	14	Q3
7	P1	15	P3
8	GND	16	V_{CC}

86

QUADRUPLE 2-INPUT EXCLUSIVE-OR GATES

typical performance

TYPE	POWER	DELAY
'86	150 mW	14 ns
'ALS86		
'L86	15 mW	55 ns
'LS86	30 mW	10 ns
'S86	250 mW	7 ns

SN5486 (J,FH) SN7486 (J,N)
SN54ALS86 (J,FH) SN74ALS86 (N,FN)
SN54L86 (J)
SN54LS86 (J,FH) SN74LS86 (J,N,FN)
SN54S86 (J,FH) SN74S86 (J,N,FN)

logic symbol, '86, 'ALS86, 'LS86, 'S86†

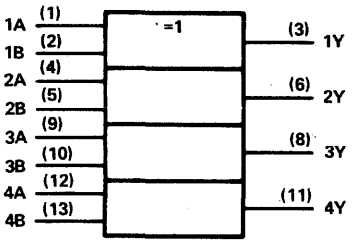

pin assignments, '86, 'ALS86, 'LS86, 'S86

J, N PACKAGES				FH, FN PACKAGES			
1	1A	8	3Y	1	nc	11	nc
2	1B	9	3A	2	1A	12	3Y
3	1Y	10	3B	3	1B	13	3A
4	2A	11	4Y	4	1Y	14	3B
5	2B	12	4A	5	nc	15	nc
6	2Y	13	4B	6	2A	16	4Y
7	GND	14	V_{CC}	7	nc	17	nc
				8	2B	18	4A
				9	2Y	19	4B
				10	GND	20	V_{CC}

logic symbol, 'L86†

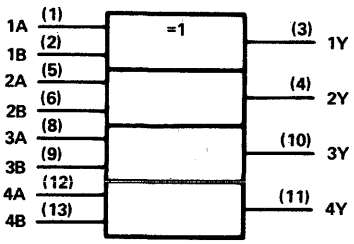

pin assignments, 'L86

J, N PACKAGES			
1	1A	8	3A
2	1B	9	3B
3	1Y	10	3Y
4	2Y	11	4Y
5	2A	12	4A
6	2B	13	4B
7	GND	14	V_{CC}

positive logic: $Y = A \oplus B = \bar{A}B + A\bar{B}$

† Pin numbers shown on logic symbols are for J and N packages only.
nc — no internal connection.

Copyright © 1983 by Texas Instruments Incorporated.

See ALS/AS availability at front of this Product Guide.

TEXAS INSTRUMENTS
POST OFFICE BOX 225012 • DALLAS, TEXAS 75265

© IC MASTER 1984

87

4-BIT TRUE/ COMPLEMENT, ZERO/ONE ELEMENTS

SN54H87 (J) SN74H87 (J,N)

typical performance

TYPE	POWER	DELAY
'H87	270 mW	14 ns

logic symbol†

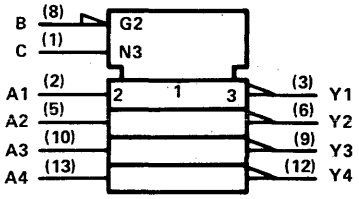

pin assignments

J, N PACKAGES			
1	C	8	B
2	A1	9	Y3
3	Y1	10	A3
4	nc	11	nc
5	A2	12	Y4
6	Y2	13	A4
7	GND	14	V_{CC}

89

64-BIT READ/WRITE MEMORIES

typical performance

TYPE	ADDRESS TIME	ENABLE TIME	POWER PER BIT
'89	32 ns	30 ns	5.9 mW

SN7489 (J,N)

logic symbol†

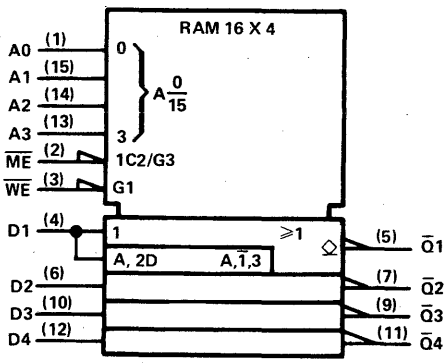

pin assignments

J, N PACKAGES			
1	A0	9	$\overline{Q}3$
2	$\overline{ME}$	10	D3
3	$\overline{WE}$	11	$\overline{Q}4$
4	D1	12	D4
5	$\overline{Q}1$	13	A3
6	D2	14	A2
7	$\overline{Q}2$	15	A1
8	GND	16	V_{CC}

† Pin numbers shown on logic symbols are for J and N packages only.
nc — no internal connection.

Copyright © 1983 by Texas Instruments Incorporated.

90

DECADE COUNTERS

typical performance

TYPE	COUNT FREQUENCY	CLEAR	TOTAL POWER
'90A	32 MHz	HIGH	160 mW
'L90	3 MHz	HIGH	20 mW
'LS90	32 MHz	HIGH	40 mW

SN5490A (J) SN7490A (J,N)
SN54L90 (J)
SN54LS90 (J) SN74LS90 (J,N)

logic symbol†

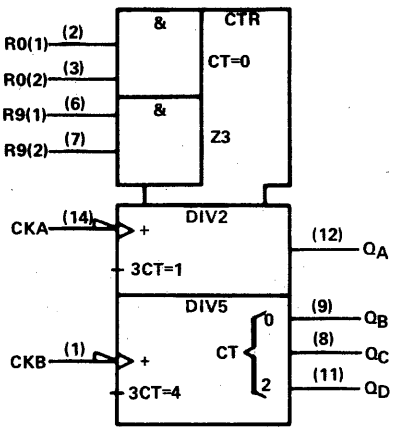

pin assignments

J, N PACKAGES			
1	CKB	8	Q_C
2	R0(1)	9	Q_B
3	R0(2)	10	GND
4	nc	11	Q_D
5	V_{CC}	12	Q_A
6	R9(1)	13	nc
7	R9(2)	14	CKA

For new chip carrier designs, use '290 or 'LS290.

91

8-BIT SHIFT REGISTERS

typical performance

TYPE	SHIFT FREQUENCY	SERIAL DATA INPUT	TOTAL POWER
'91A	10 MHz	GATED D	175 mW
'L91	3 MHz	GATED D	17.5 mW
'LS91	25 MHz	GATED D	60 mW

SN5491A (J) SN7491A (J,N)
SN54L91 (J)
SN54LS91 (J) SN74LS91 (J,N)

logic symbol†

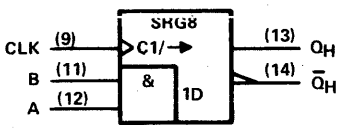

pin assignments

J, N PACKAGES			
1	nc	8	nc
2	nc	9	CLK
3	nc	10	GND
4	nc	11	B
5	V_{CC}	12	A
6	nc	13	QH
7	nc	14	QH

For chip carrier information, contact the factory.

92

DIVIDE-BY-12 COUNTERS

typical performance

TYPE	COUNT FREQUENCY	CLEAR	TOTAL POWER
'92A	32 MHz	HIGH	160 mW
'LS92	32 MHz	HIGH	39 mW

SN5492A (J) SN7492A (J,N)
SN54LS92 (J) SN74LS92 (J,N)

logic symbol†

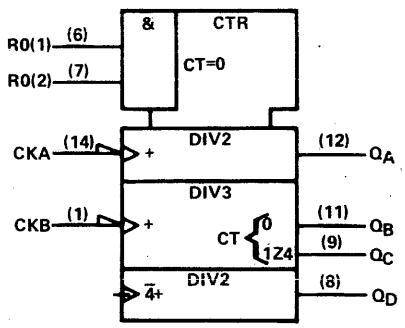

pin assignments

J, N PACKAGES			
1	CKB	8	Q_D
2	nc	9	Q_C
3	nc	10	GND
4	nc	11	Q_B
5	V_{CC}	12	Q_A
6	R0(1)	13	nc
7	R0(2)	14	CKA

For new chip carrier designs, use "LS292.

† Pin numbers shown on logic symbols are for J and N packages only.
nc — no internal connection.

Copyright © 1983 by Texas Instruments Incorporated.

TEXAS INSTRUMENTS
POST OFFICE BOX 225012 • DALLAS, TEXAS 75265

© IC MASTER 1984

93

4-BIT BINARY COUNTERS

typical performance

TYPE	COUNT FREQUENCY	CLEAR	TOTAL POWER
'93A	32 MHz	HIGH	160 mW
'L93	3 MHz	HIGH	20 mW
'LS93	32 MHz	HIGH	39 mW

SN5493A (J) SN7493A (J,N)
SN54L93 (J)
SN54LS93 (J) SN74LS93 (J,N)

logic symbol, '93A, 'LS93†

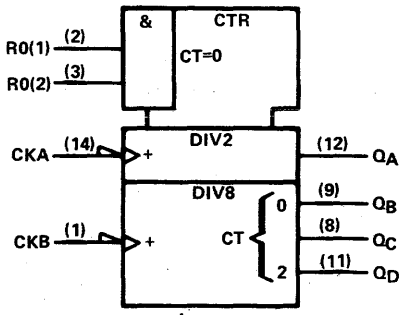

pin assignments, '93A, 'LS93

J, N PACKAGES			
1	CKB	8	Q_C
2	R0(1)	9	Q_B
3	R0(2)	10	GND
4	nc	11	Q_D
5	V_{CC}	12	Q_A
6	nc	13	nc
7	nc	14	CKA

logic symbol, 'L93†

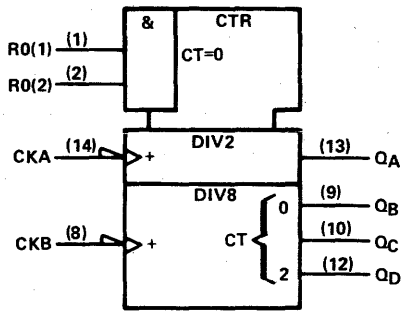

pin assignments, 'L93

J, N PACKAGES			
1	R0(1)	8	CKB
2	R0(2)	9	Q_B
3	nc	10	Q_C
4	V_{CC}	11	GND
5	nc	12	Q_D
6	no	13	Q_A
7	nc	14	CKA

For new chip carrier designs, use '293 or 'LS293.

94

4-BIT SHIFT REGISTERS (DUAL ASYNCHRONOUS PRESETS)

typical performance

TYPE	SHIFT FREQUENCY	SERIAL DATA INPUT	ASYNC CLEAR	TOTAL POWER
'94	10 MHz	D	HIGH	175 mW

SN5494 (J) SN7494 (J,N)

logic symbol†

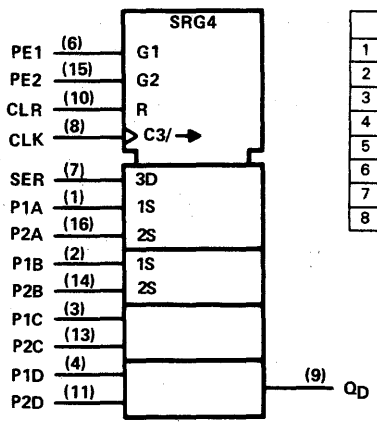

pin assignments

J, N PACKAGES			
1	P1A	9	Q_D
2	P1B	10	CLR
3	P1C	11	P2D
4	P1D	12	GND
5	V_{CC}	13	P2C
6	PE1	14	P2B
7	SER	15	PE2
8	CLK	16	P2A

† Pin numbers shown on logic symbols are for J and N packages only.
nc — no internal connection.

Copyright © 1983 by Texas Instruments Incorporated.

TEXAS INSTRUMENTS
POST OFFICE BOX 225012 • DALLAS, TEXAS 75265

95

4-BIT SHIFT REGISTERS (PARALLEL IN/PARALLEL OUT, SHIFT RIGHT, SHIFT LEFT, SERIAL INPUT)

typical performance

TYPE	SHIFT FREQUENCY	SERIAL DATA INPUT	TOTAL POWER
'95A	25 MHz	D	195 mW
'AS95			
'L95	3 MHz	D	19 mW
'LS95B	30 MHz	D	65 mW

SN5495A (J,FH) SN7495A (J,N)
SN54AS95 (J,FH) SN74AS95 (N,FN)
SN54L95 (J)
SN54LS95B (J,FH) SN74LS95B (J,N,FN)

logic symbol, '95A, 'AS95, 'LS95B†

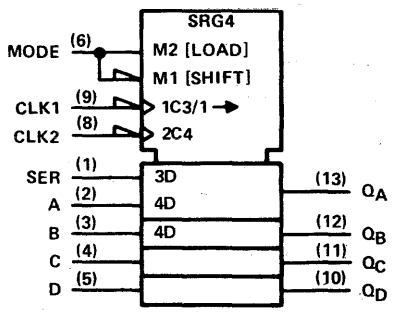

pin assignments, '95A, 'LS95B

J, N PACKAGES				FH, FN PACKAGES			
1	SER	8	CLK2	1	nc	11	nc
2	A	9	CLK1	2	SER	12	CLK2
3	B	10	Q_D	3	A	13	CLK1
4	C	11	Q_C	4	B	14	Q_D
5	D	12	Q_B	5	nc	15	nc
6	MODE	13	Q_A	6	C	16	Q_C
7	GND	14	V_{CC}	7	nc	17	nc
				8	D	18	Q_B
				9	MODE	19	Q_A
				10	GND	20	V_{CC}

logic symbol, 'L95†

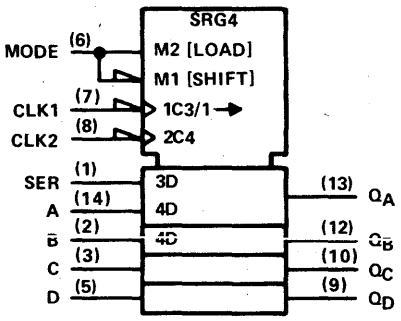

pin assignments, 'L95

J, N PACKAGES			
1	SER	8	CLK2
2	B	9	Q_D
3	C	10	Q_C
4	V_{CC}	11	GND
5	D	12	Q_B
6	MODE	13	Q_A
7	CLK1	14	A

96

5-BIT SHIFT REGISTERS

typical performance

TYPE	SHIFT FREQUENCY	SERIAL DATA INPUT	ASYNC CLEAR	TOTAL POWER
'96	10 MHz	D	LOW	240 mW
'L96	5 MHz	D	LOW	120 mW
'LS96	10 MHz	D	LOW	60 mW

SN5496 (J) SN7496 (J,N)
SN54L96 (J)
SN54LS96 (J) SN74LS96 (J,N)

logic symbol†

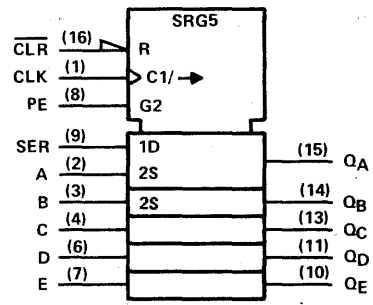

pin assignments

J, N PACKAGES			
1	CLK	9	SER
2	A	10	Q_E
3	B	11	Q_D
4	C	12	GND
5	V_{CC}	13	Q_C
6	D	14	Q_B
7	E	15	Q_A
8	PE	16	$\overline{CLR}$

For chip carrier information, contact the factory.

97

SYNCHRONOUS 6-BIT BINARY RATE MULTIPLIERS

typical performance

TYPE	POWER	FREQ‡
'97	345 mW	32 MHz

‡ Maximum clock frequency

SN5497 (J,FH)
SN7497 (J,N)

logic symbol†

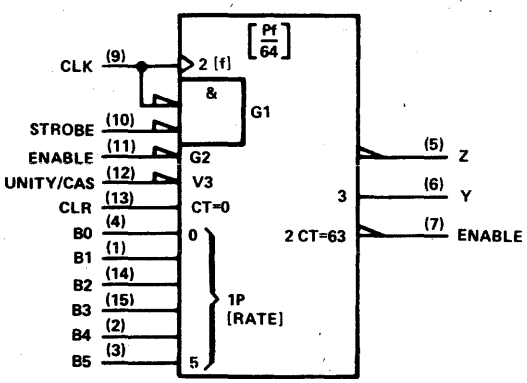

pin assignments

J, N PACKAGES				FH PACKAGE			
1	B1	9	CLK	1	nc	11	nc
2	B4	10	STRB	2	B1	12	CLK
3	B5	11	ENin	3	B4	13	STRB
4	B0	12	UNITY/CAS	4	B5	14	ENin
5	Z	13	CLR	5	B0	15	UNITY/CAS
6	Y	14	B2	6	nc	16	nc
7	ENout	15	B3	7	Z	17	CLR
8	GND	16	V_{CC}	8	Y	18	B2
				9	ENout	19	B3
				10	GND	20	V_{CC}

† Pin numbers shown on logic symbols are for J and N packages only.
nc — no internal connection.

Copyright © 1983 by Texas Instruments Incorporated.

See ALS/AS availability at front of this Product Guide.

TEXAS INSTRUMENTS
POST OFFICE BOX 225012 • DALLAS, TEXAS 75265

© IC MASTER 1984

98

4-BIT DATA SELECTOR/ STORAGE REGISTERS

typical performance

TYPE	FREQUENCY	POWER
'L98	3 MHz	25 mW

SN54L98 (J)

logic symbol†

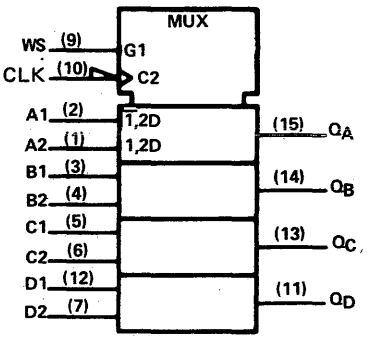

pin assignments

J, N PACKAGES			
1	A2	9	WS
2	A1	10	CLK
3	B1	11	Q_D
4	B2	12	D1
5	C1	13	Q_C
6	C2	14	Q_B
7	D2	15	Q_A
8	GND	16	V_{CC}

99

4-BIT BIDIRECTIONAL UNIVERSAL SHIFT REGISTERS

typical performance

TYPE	SHIFT FREQUENCY	SERIAL DATA INPUT	TOTAL POWER
'L99	3 MHz	J-$\overline{K}$	19 mW

SN54L99 (J)

logic symbol†

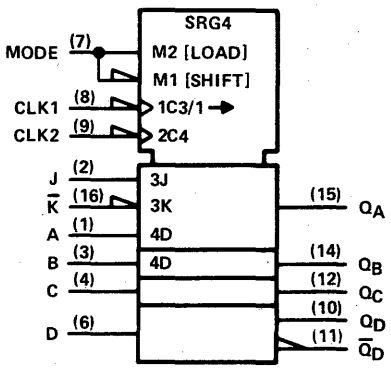

pin assignments

J, N PACKAGES			
1	A	9	CLK2
2	J	10	Q_D
3	B	11	$\overline{Q}_D$
4	C	12	Q_C
5	V_{CC}	13	GND
6	D	14	Q_B
7	MODE	15	Q_A
8	CLK1	16	$\overline{K}$

100

8-BIT BISTABLE LATCHES

typical performance

TYPE	DELAY	TOTAL POWER
'100	15 ns	320 mW

SN54100 (J) SN74100 (J,N)

logic symbol†

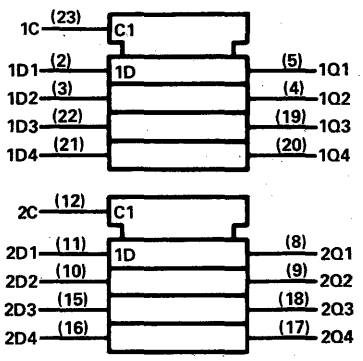

pin assignments

J, N PACKAGES			
1	nc	13	nc
2	1D1	14	nc
3	1D2	15	2D3
4	1Q2	16	2D4
5	1Q1	17	2Q4
6	nc	18	2Q3
7	GND	19	1Q3
8	2Q1	20	1Q4
9	2Q2	21	1D4
10	2D2	22	1D3
11	2D1	23	1C
12	2C	24	V_{CC}

For chip carrier information, contact the factory.

† Pin numbers shown on logic symbols are for J and N packages only.
nc — no internal connection.

Copyright © 1983 by Texas Instruments Incorporated.

TEXAS INSTRUMENTS
POST OFFICE BOX 225012 • DALLAS, TEXAS 75265

101

AND-OR-GATED J-K NEGATIVE-EDGE-TRIGGERED FLIP-FLOPS WITH PRESET

typical performance

TYPE	f_{max}	PWR	SET-UP	HOLD
'H101	50 MHz	100 mW	13 ns↓	0 ns↓

↓ Falling edge of clock pulse

SN54H101 (J) SN74H101 (J,N)

logic symbol†

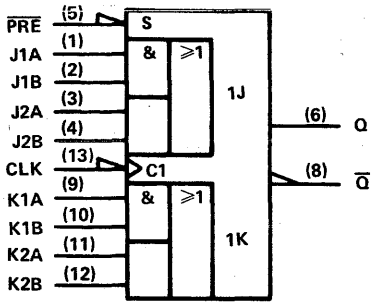

positive logic: J = (J1A · J1B) + (J2A · J2B)
K = (K1A · K1B) + (K2A · K2B)

pin assignments

J, N PACKAGES			
1	J1A	8	Q̄
2	J1B	9	K1A
3	J2A	10	K1B
4	J2B	11	K2A
5	PRE	12	K2B
6	Q	13	CLK
7	GND	14	V_{CC}

102

AND-GATED J-K NEGATIVE-EDGE-TRIGGERED FLIP-FLOPS WITH PRESET AND CLEAR

typical performance

TYPE	f_{max}	PWR	SET-UP	HOLD
'H102	50 MHz	100 mW	13 ns↓	0 ns↓

↓ Falling edge of clock pulse

SN54H102 (J) SN74H102 (J,N)

logic symbol†

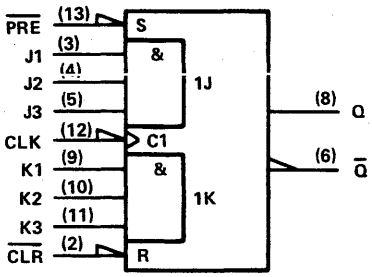

positive logic: J = J1 · J2 · J3
K = K1 · K2 · K3

pin assignments

J, N PACKAGES			
1	nc	8	Q
2	CLR	9	K1
3	J1	10	K2
4	J2	11	K3
5	J3	12	CLK
6	Q̄	13	PRE
7	GND	14	V_{CC}

103

DUAL J-K NEGATIVE-EDGE-TRIGGERED FLIP-FLOPS WITH CLEAR

typical performance

TYPE	f_{max}	PWR/F-F	SET-UP	HOLD
'H103	50 MHz	100 mW	13 ns↓	0 ns↓

↓ Falling edge of clock pulse

SN54H103 (J) SN74H103 (J,N)

logic symbol†

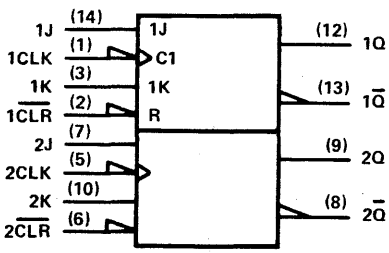

pin assignments

J, N PACKAGES			
1	1CLK	8	2Q̄
2	1CLR	9	2Q
3	1K	10	2K
4	V_{CC}	11	GND
5	2CLK	12	1Q
6	2CLR	13	1Q
7	2J	14	1J

† Pin numbers shown on logic symbols are for J and N packages only.
nc — no internal connection.

Copyright © 1983 by Texas Instruments Incorporated.

TEXAS INSTRUMENTS
POST OFFICE BOX 225012 • DALLAS, TEXAS 75265

© IC MASTER 1984

106

DUAL J-K NEGATIVE-EDGE TRIGGERED FLIP-FLOPS WITH PRESET AND CLEAR

typical performance

TYPE	f_{max}	PWR/ F-F	SET-UP	HOLD
'H106	50 MHz	100 mW	13 ns↓	0 ns↓

↓ Falling edge of clock pulse

SN54H106 (J) SN74H106 (J,N)

logic symbol†

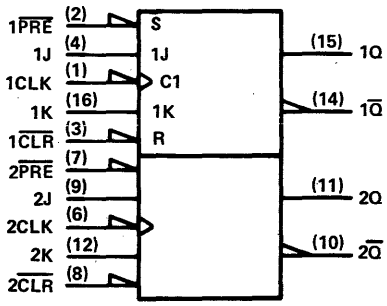

pin assignments

J, N PACKAGES			
1	1CLK	9	2J
2	1PRE	10	2Q̄
3	1CLR	11	2Q
4	1J	12	2K
5	V_{CC}	13	GND
6	2CLK	14	1Q̄
7	2PRE	15	1Q
8	2CLR	16	1K

107

DUAL J-K FLIP-FLOPS WITH CLEAR

typical performance

TYPE	f_{max}	PWR/ FF	SET-UP	HOLD
'107	20 MHz	50 mW	0 ns↑	0 ns↓
'LS107A	45 MHz	10 mW	20 ns↓	0 ns↓

↑ Rising edge of clock pulse
↓ Falling edge of clock pulse

SN54107 (J,FH) SN74107 (J,N)
SN54LS107A (J,FH) SN74LS107A (J,N,FN)

logic symbol, '107†

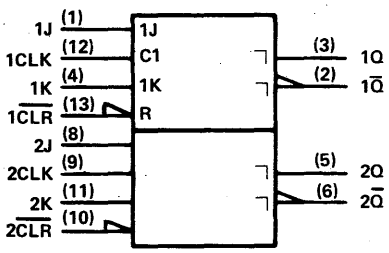

logic symbol, 'LS107A†

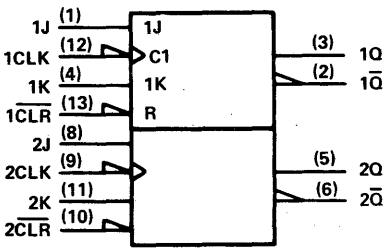

pin assignments

J, N PACKAGES			
1	1J	8	2J
2	1Q̄	9	2CLK
3	1Q	10	2CLR
4	1K	11	2K
5	2Q	12	1CLK
6	2Q̄	13	1CLR
7	GND	14	V_{CC}

FH, FN PACKAGES			
1	nc	11	nc
2	1J	12	2J
3	1Q̄	13	2CLK
4	1Q	14	2CLR
5	nc	15	nc
6	1K	16	2K
7	nc	17	nc
8	2Q	18	1CLK
9	2Q̄	19	1CLR
10	GND	20	V_{CC}

† Pin numbers shown on logic symbols are for J and N packages only.
nc — no internal connection.

Copyright © 1983 by Texas Instruments Incorporated.

108

DUAL J-K NEGATIVE-EDGE-TRIGGERED FLIP-FLOPS WITH PRESET, COMMON CLEAR, AND COMMON CLOCK

typical performance

TYPE	f_{max}	PWR/ F-F	SET-UP	HOLD
'H108	50 MHz	100 mW	13 ns↓	0 ns↓

↓ Falling edge of clock pulse

SN54H108 (J) SN74H108 (J,N)

logic symbol†

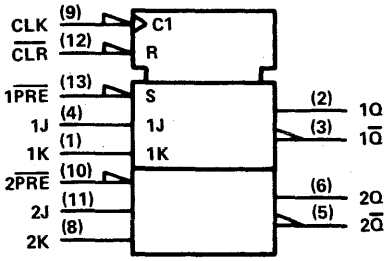

pin assignments

J, N PACKAGES			
1	1K	8	2K
2	1Q	9	CLK
3	1Q̄	10	2PRE
4	1J	11	2J
5	2Q̄	12	CLR
6	2Q	13	1PRE
7	GND	14	V_{CC}

109

DUAL J-K̄ POSITIVE-EDGE-TRIGGERED FLIP-FLOPS WITH PRESET AND CLEAR

typical performance

TYPE	f_{max}	PWR/ F-F	SET-UP	HOLD
'109	33 MHz	45 mW	10 ns↑	6 ns↑
'ALS109	50 MHz	6 mW	15 ns↑	0 ns↑
'AS109	125 MHz	29 mW	4.5 ns↑	0 ns↑
'LS109A	33 MHz	10 mW	20 ns↑	5 ns↑

↑ Rising edge of clock pulse

SN54109 (J,FH) SN74109 (J,N)
SN54ALS109 (J,FH) SN74ALS109 (N,FN)
SN54AS109 (J,FH) SN74AS109 (N,FN)
SN54LS109A (J,FH) SN74LS109A (J,N,FN)

logic symbol†

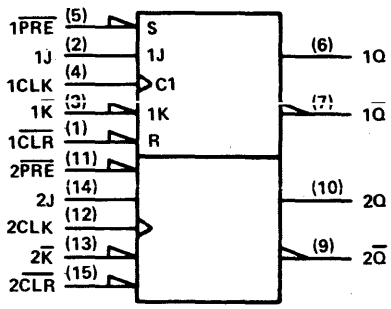

pin assignments

J, N PACKAGES			
1	1CLR	9	2Q̄
2	1J	10	2Q
3	1K̄	11	2PRE
4	1CLK	12	2CLK
5	1PRE	13	2K̄
6	1Q	14	2J
7	1Q̄	15	2CLR
8	GND	16	V_{CC}

FH, FN PACKAGES			
1	nc	11	nc
2	1CLR	12	2Q̄
3	1J	13	2Q
4	1K̄	14	2PRE
5	1CLK	15	2CLK
6	nc	16	nc
7	1PRE	17	2K̄
8	1Q	18	2J
9	1Q̄	19	2CLR
10	GND	20	V_{CC}

110

AND-GATED J-K MASTER-SLAVE FLIP-FLOPS WITH DATA LOCKOUT

typical performance

TYPE	f_{max}	PWR	SET-UP	HOLD
'110	25 MHz	100 mW	20 ns↑	5 ns↑

↑ Rising edge of clock pulse

SN54110 (J) SN74110 (J,N)

logic symbol†

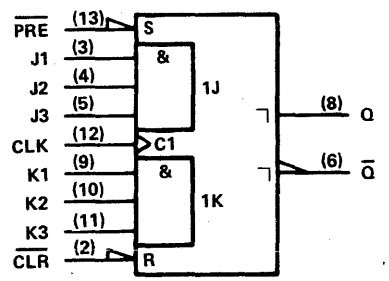

positive logic: J = J1 · J2 · J3
K = K1 · K2 · K3

pin assignments

J, N PACKAGES			
1	nc	8	Q
2	CLR	9	K1
3	J1	10	K2
4	J2	11	K3
5	J3	12	CLK
6	Q̄	13	PRE
7	GND	14	V_{CC}

† Pin numbers shown on logic symbols are for J and N packages only.
nc — no internal connection.

Copyright © 1983 by Texas Instruments Incorporated.

TEXAS INSTRUMENTS
POST OFFICE BOX 225012 • DALLAS, TEXAS 75265

© IC MASTER 1984

111

DUAL J-K MASTER-SLAVE FLIP-FLOPS WITH DATA LOCKOUT

typical performance

TYPE	f_{max}	PWR/ FF	SET-UP	HOLD
'111	25 MHz	70 mW	0 ns↑	30 ns↑

↑ Rising edge of clock pulse

SN54111 (J) SN74111 (J,N)

logic symbol†

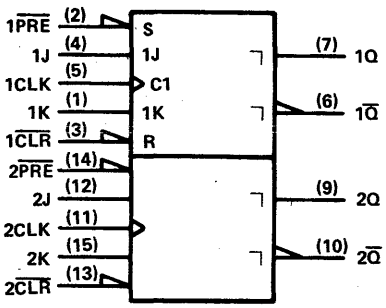

pin assignments

J, N PACKAGES			
1	1K	9	2Q
2	1PRE	10	2Q̄
3	1CLR	11	2CLK
4	1J	12	2J
5	1CLK	13	2CLR
6	1Q̄	14	2PRE
7	1Q	15	2K
8	GND	16	V_{CC}

112

DUAL J-K NEGATIVE-EDGE-TRIGGERED FLIP-FLOPS WITH PRESET AND CLEAR

typical performance

TYPE	f_{max}	PWR/ F-F	SET-UP	HOLD
'ALS112A	40 MHz	6 mW	25 ns↓	0 ns↓
'AS112	200 MHz	95 mW		
'LS112A	45 MHz	10 mW	20 ns↓	0 ns↓
'S112	125 MHz	75 mW	3 ns↓	0 ns↓

↓ Falling edge of clock pulse

SN54ALS112A (J,FH) SN74ALS112A (N,FN)
SN54AS112 (J,FH) SN74AS112 (N,FN)
SN54LS112A (J,FH) SN74LS112A (J,N,FN)
SN54S112 (J,FH) SN74S112 (J,N,FN)

logic symbol†

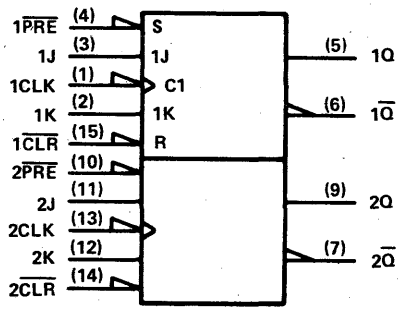

pin assignments

J, N PACKAGES			
1	1CLK	9	2Q
2	1K	10	2PRE
3	1J	11	2J
4	1PRE	12	2K
5	1Q	13	2CLK
6	1Q̄	14	2CLR
7	2Q̄	15	1CLR
8	GND	16	V_{CC}

FH, FN PACKAGES			
1	nc	11	nc
2	1CLK	12	2Q
3	1K	13	2PRE
4	1J	14	2J
5	1PRE	15	2K
6	nc	16	nc
7	1Q	17	2CLK
8	1Q̄	18	2CLR
9	2Q̄	19	1CLR
10	GND	20	V_{CC}

113

DUAL J-K NEGATIVE-EDGE-TRIGGERED FLIP-FLOPS WITH PRESET

typical performance

TYPE	f_{max}	PWR/ F-F	SET-UP	HOLD
'ALS113A	40 MHz	6 mW	25 ns↓	0 ns↓
'AS113	200 MHz	95 mW		
'LS113A	45 MHz	10 mW	20 ns↓	0 ns↓
'S113	125 MHz	75 mW	3 ns↓	0 ns↓

↓ Falling edge of clock pulse

SN54ALS113A (J,FH) SN74ALS113A (N,FN)
SN54AS113 (J,FH) SN74AS113 (N,FN)
SN54LS113A (J,FH) SN74LS113A (J,N,FN)
SN54S113 (J,FH) SN74S113 (J,N,FN)

logic symbol†

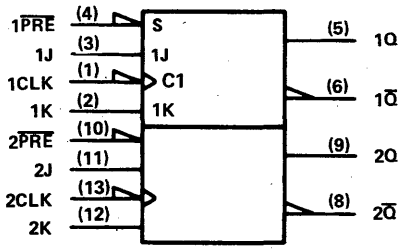

pin assignments

J, N PACKAGES			
1	1CLK	8	2Q̄
2	1K	9	2Q
3	1J	10	2PRE
4	1PRE	11	2J
5	1Q	12	2K
6	1Q̄	13	2CLK
7	GND	14	V_{CC}

FH, FN PACKAGES			
1	nc	11	nc
2	1CLK	12	2Q̄
3	1K	13	2Q
4	1J	14	2PRE
5	nc	15	nc
6	1PRE	16	2J
7	nc	17	nc
8	1Q	18	2K
9	1Q̄	19	2CLK
10	GND	20	V_{CC}

† Pin numbers shown on logic symbols are for J and N packages only.
nc — no internal connection.

Copyright © 1983 by Texas Instruments Incorporated.

See ALS/AS availability at front of this Product Guide.

TEXAS INSTRUMENTS
POST OFFICE BOX 225012 • DALLAS, TEXAS 75265

114

DUAL J-K NEGATIVE-EDGE-TRIGGERED FLIP-FLOPS WITH PRESET, COMMON CLEAR, AND COMMON CLOCK

typical performance

TYPE	f_{max}	PWR/ F-F	SET-UP	HOLD
'ALS114A	40 MHz	6 mW	25 ns↓	0 ns↓
'AS114	200 MHz	95 mW		
'LS114A	45 MHz	10 mW	20 ns↓	0 ns↓
'S114	125 MHz	75 mW	3 ns↓	0 ns↓

↓ Falling edge of clock pulse

SN54ALS114A (J,FH) SN74ALS114A (N,FN)
SN54AS114 (J,FH) SN74AS114 (N,FN)
SN54LS114A (J,FH) SN74LS114A (J,N,FN)
SN54S114 (J,FH) SN74S114 (J,N,FN)

logic symbol†

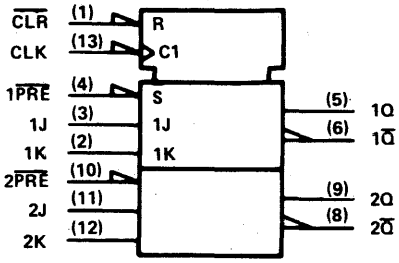

pin assignments

J, N PACKAGES				FH, FN PACKAGES			
1	1CLR	8	2Q̄	1	nc	11	nc
2	1K	9	2Q	2	1CLR	12	2Q̄
3	1J	10	2PRE	3	1K	13	2Q
4	1PRE	11	2J	4	1J	14	2PRE
5	1Q	12	2K	5	nc	15	nc
6	1Q̄	13	CLK	6	1PRE	16	2J
7	GND	14	V_{CC}	7	nc	17	nc
				8	1Q	18	2K
				9	1Q̄	19	CLK
				10	GND	20	V_{CC}

116

DUAL 4-BIT LATCHES

typical performance

TYPE	BITS	CLEAR	DELAY	TOTAL POWER
'116	8	LOW	11 ns	250 mW

SN54116 (J,FH) SN74116 (J,N)

logic symbol†

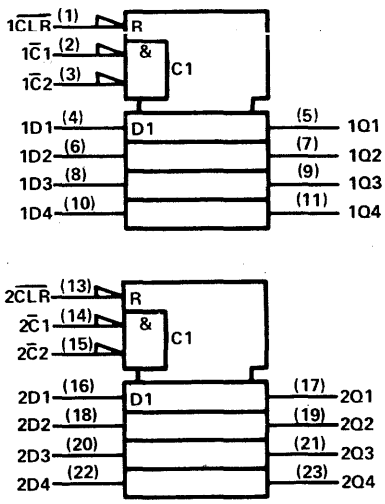

pin assignments

J, N PACKAGES				FH PACKAGE			
1	1CLR	13	2CLR	1	nc	15	nc
2	1C1	14	2C1	2	1CLR	16	2CLR
3	1C2	15	2C2	3	1C1	17	2C1
4	1D1	16	2D1	4	1C2	18	2C2
5	1Q1	17	2Q1	5	1D1	19	2D1
6	1D2	18	2D2	6	1Q1	20	2Q1
7	1Q2	19	2Q2	7	1D2	21	2D2
8	1D3	20	2D3	8	nc	22	nc
9	1Q3	21	2Q3	9	1Q2	23	2Q2
10	1D4	22	2D4	10	1D3	24	2D3
11	1Q4	23	2Q4	11	1Q3	25	2Q3
12	GND	24	V_{CC}	12	1D4	26	2D4
				13	1Q4	27	2Q4
				14	GND	28	V_{CC}

† Pin numbers shown on logic symbols are for J and N packages only.
nc — no internal connection.

Copyright © 1983 by Texas Instruments Incorporated.

See ALS/AS availability at front of this Product Guide.

TEXAS INSTRUMENTS
POST OFFICE BOX 225012 • DALLAS, TEXAS 75265

© IC MASTER 1984

120

DUAL PULSE SYNCHRONIZERS/DRIVERS

typical performance

TYPE	ENABLE INPUT	COMP OUTPUT	FREQ RANGE	POWER
'120	YES	YES	DC to 30 MHz	255 mW

SN54120 (J,FH) SN74120 (J,N)

logic symbol†

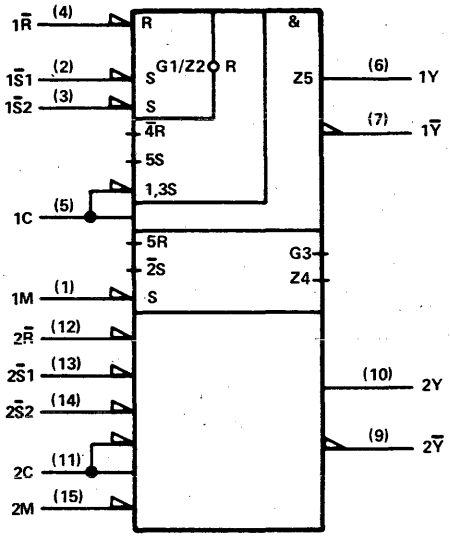

pin assignments

J, N PACKAGES			
1	1M	9	2Y̅
2	1S̄1	10	2Y
3	1S̄2	11	2C
4	1R	12	2R̄
5	1C	13	2S̄1
6	1Y	14	2S̄2
7	1Y̅	15	2M
8	GND	16	V_{CC}

FH PACKAGE			
1	nc	11	nc
2	1M	12	2Y̅
3	1S̄1	13	2Y
4	1S̄2	14	2C
5	1R̄	15	2R̄
6	nc	16	nc
7	1C	17	2S̄1
8	1Y̅	18	2S̄2
9	1Y	19	2M
10	GND	20	V_{CC}

121

MONOSTABLE MULTIVIBRATORS

typical performance

TYPE	NO. OF INPUTS		OUTPUT PULSE RANGE	TOTAL POWER
	HI	LO		
'121	1	2	40 ns-28 s	90 mW
'L121	1	2	40 ns-28 s	40 mW

SN54121 (J) SN74121 (J,N)
SN54L121 (J)

logic symbol†

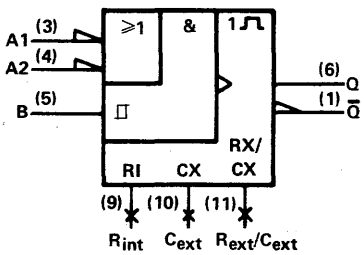

pin assignments

J, N PACKAGES			
1	Q̅	8	nc
2	nc	9	R_{int}
3	A1	10	C_{ext}
4	A2	11	R_{ext}/C_{ext}
5	B	12	nc
6	Q	13	nc
7	GND	14	V_{CC}

'121 . . . R_{int} = 2 kΩ nominal
'L121 . . . R_{int} = 4 kΩ nominal

122

RETRIGGERABLE MONOSTABLE MULTIVIBRATORS WITH CLEAR

logic symbol†

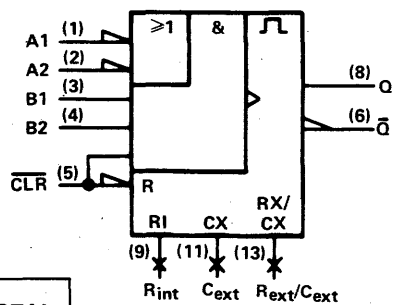

typical performance

TYPE	NO. OF INPUTS		DIRECT CLEAR	OUTPUT PULSE RANGE	TOTAL POWER
	HI	LO			
'122	2	2	YES	45 ns-∞	115 mW
'L122	2	2	YES	90 ns-∞	55 mW
'LS122	2	2	YES	45 ns-∞	30 mW

SN54122 (J,FH) SN74122 (J,N)
SN54L122 (J)
SN54LS122 (J,FH) SN74LS122 (J,N,FN)

pin assignments

J, N PACKAGES			
1	A1	8	Q
2	A2	9	R_{INT}
3	B1	10	nc
4	B2	11	C_{EXT}
5	CLR	12	nc
6	Q̅	13	R_{ext}/C_{ext}
7	GND	14	V_{CC}

FH, FN PACKAGES			
1	nc	11	nc
2	A1	12	Q
3	A2	13	R_{int}
4	B1	14	nc
5	nc	15	nc
6	B2	16	C_{ext}
7	nc	17	nc
8	CLR	18	nc
9	Q̅	19	R_{ext}/C_{ext}
10	GND	20	V_{CC}

'122 . . . R_{int} = 10 kΩ nominal
'L122 . . . R_{int} = 20 kΩ nominal
'LS122 . . . R_{int} = 10 kΩ nominal

† Pin numbers shown on logic symbols are for J and N packages only.
nc — no internal connection.

Copyright © 1983 by Texas Instruments Incorporated.

123

DUAL RETRIGGERABLE MONOSTABLE MULTIVIBRATORS WITH POSITIVE AND NEGATIVE INPUTS AND DIRECT CLEAR

typical performance

TYPE	OUTPUT PULSE RANGE	TOTAL POWER
'123	45 ns-∞	230 mW
'L123	90 ns-∞	115 mW
'LS123	45 ns-∞	60 mW

logic symbol†

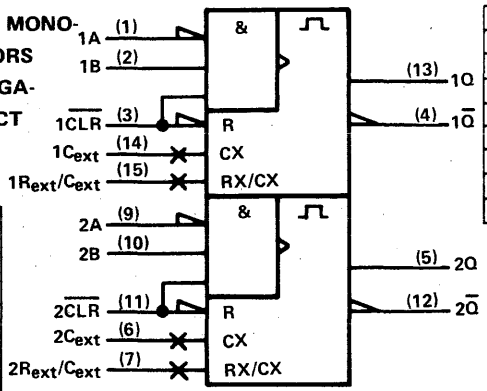

pin assignments

J, N PACKAGES				FH, FN PACKAGES			
1	1A	9	2A	1	nc	11	nc
2	1B	10	2B	2	1A	12	2A
3	1CLR	11	2CLR	3	1B	13	2B
4	1Q̄	12	2Q̄	4	1CLR	14	2CLR
5	2Q	13	1Q	5	1Q̄	15	2Q̄
6	2Cext	14	1Cext	6	nc	16	nc
7	2Rext/Cext	15	1Rext/Cext	7	2Q	17	1Q
8	GND	16	VCC	8	2Cext	18	1Cext
				9	2Rext/Cext	19	1Rext/Cext
				10	GND	20	VCC

SN54123 (J,FH) SN74123 (J,N)
SN54L123 (J)
SN54LS123 (J,FH) SN74LS123 (J,N,FN)

124

DUAL VOLTAGE-CONTROLLED OSCILLATORS WITH ENABLE INPUTS

typical performance

TYPE	FREQ RANGE	POWER
'S124	1 Hz to 60 MHz	525 mW

SN54S124 (J,FH) SN74S124 (J,N,FN)

logic symbol†

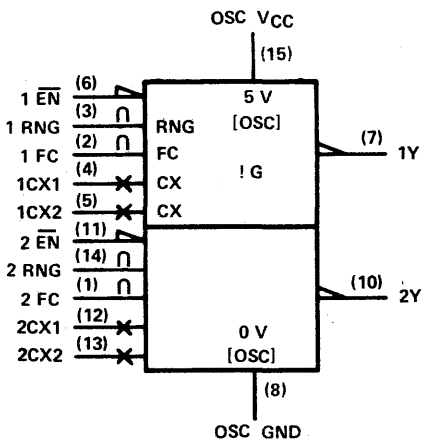

pin assignments

J, N PACKAGES				FH, FN PACKAGES			
1	2FC	9	GND	1	nc	11	nc
2	1FC	10	2Y	2	2FC	12	GND
3	1RNG	11	2EN	3	1FC	13	2Y
4	1CX1	12	2CX1	4	1RNG	14	2EN
5	1CX2	13	2CX2	5	1CX1	15	2CX1
6	1EN	14	2RNG	6	nc	16	nc
7	1Y	15	OSC VCC	7	1CX2	17	2CX2
8	OSC GND	16	VCC	8	1EN	18	2RNG
				9	1Y	19	OSC VCC
				10	OSC GND	20	VCC

† Pin numbers shown on logic symbols are for J and N packages only.
nc — no internal connection.

Copyright © 1983 by Texas Instruments Incorporated.

125

QUADRUPLE BUS BUFFER GATES WITH THREE-STATE OUTPUTS

typical performance

TYPE	DELAY	MAX SOURCE CURRENT	MAX SINK CURRENT
SN54125	10 ns	−2 mA	16 mA
SN74125	10 ns	−5.2 mA	16 mA
SN54LS125A	8 ns	−1 mA	12 mA
SN74LS125A	8 ns	−2.6 mA	24 mA

SN54125 (J,FH) SN74125 (J,N)
SN54LS125A (J,FH) SN74LS125A (J,N,FN)

logic symbol, '125†

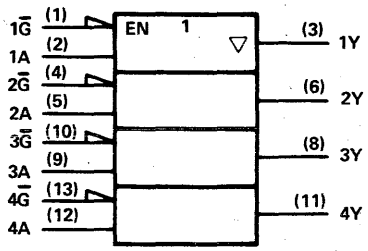

logic symbol, 'LS125A†

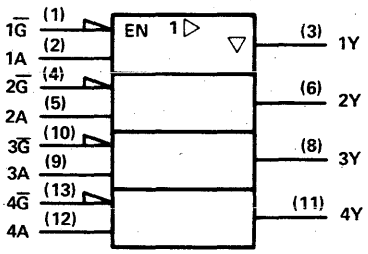

positive logic: Y = A

pin assignments

J, N PACKAGES				FH, FN PACKAGES			
1	1G̅	8	3Y	1	nc	11	nc
2	1A	9	3A	2	1G̅	12	3Y
3	1Y	10	3G̅	3	1A	13	3A
4	2G̅	11	4Y	4	1Y	14	3G̅
5	2A	12	4A	5	nc	15	nc
6	2Y	13	4G̅	6	2G̅	16	4Y
7	GND	14	V_{CC}	7	nc	17	nc
				8	2A	18	4A
				9	2Y	19	4G̅
				10	GND	20	V_{CC}

126

QUADRUPLE BUS BUFFER GATES WITH THREE-STATE OUTPUTS

typical performance

TYPE	DELAY	MAX SOURCE CURRENT	MAX SINK CURRENT
SN54126	10 ns	−2 mA	16 mA
SN74126	10 ns	−5.2 mA	16 mA
SN54LS126A	8.5 ns	−1 mA	12 mA
SN74LS126A	8.5 ns	−2.6 mA	24 mA

SN54126 (J,FH) SN74126 (J,N)
SN54LS126A (J,FH) SN74LS126A (J,N,FN)

logic symbol, '126†

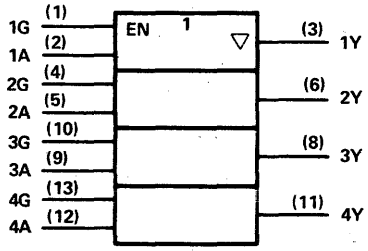

logic symbol, 'LS126A†

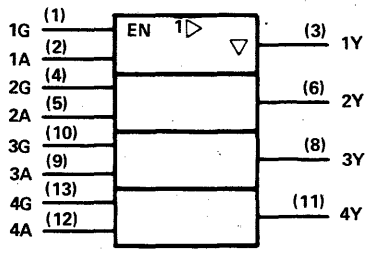

positive logic: Y = A

pin assignments

J, N PACKAGES				FH, FN PACKAGES			
1	1G	8	3Y	1	nc	11	nc
2	1A	9	3A	2	1G	12	3Y
3	1Y	10	3G	3	1A	13	3A
4	2G	11	4Y	4	1Y	14	3G
5	2A	12	4A	5	nc	15	nc
6	2Y	13	4G	6	2G	16	4Y
7	GND	14	V_{CC}	7	nc	17	nc
				8	2A	18	4A
				9	2Y	19	4G
				10	GND	20	V_{CC}

† Pin numbers shown on logic symbols are for J and N packages only.
nc — no internal connection.

Copyright © 1983 by Texas Instruments Incorporated.

128

LINE DRIVERS
(SN54128 . . . 75 Ω DRIVER
SN74128 . . . 50 Ω DRIVER)

typical performance

TYPE	LOW-LEVEL OUTPUT CURRENT	HIGH-LEVEL OUTPUT CURRENT	DELAY
SN54128	48 mA	−29 mA	7 ns
SN74128	48 mA	−42.4 mA	7 ns

SN54128 (J,FH) SN74128 (J,N)

logic symbol†

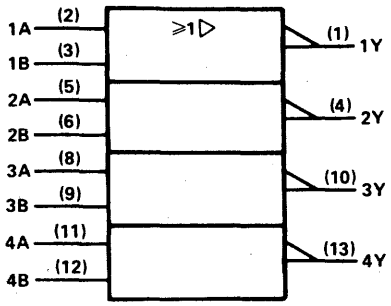

positive logic: $Y = \overline{A + B}$

pin assignments

J, N PACKAGES				FH PACKAGE			
1	1Y	8	3A	1	nc	11	nc
2	1A	9	3B	2	1Y	12	3A
3	1B	10	3Y	3	1A	13	3B
4	2Y	11	4A	4	1B	14	3Y
5	2A	12	4B	5	nc	15	nc
6	2B	13	4Y	6	2Y	16	4A
7	GND	14	V_{CC}	7	nc	17	nc
				8	2A	18	4B
				9	2B	19	4Y
				10	GND	20	V_{CC}

131

3- TO 8-LINE DECODERS/ DEMULTIPLEXERS WITH ADDRESS REGISTERS
(combines decoder and 3-bit address register and incorporates 2 enable inputs to simplify cascading)

typical performance

TYPE	CLOCK TO OUTPUT	ENABLE TIME	TOTAL POWER
'ALS131	8.5 ns	10 ns	25 mW
'AS131			

SN54ALS131 (J,FH) SN74ALS131 (N,FN)
SN54AS131 (J,FH) SN74AS131 (N,FN)

logic symbols†

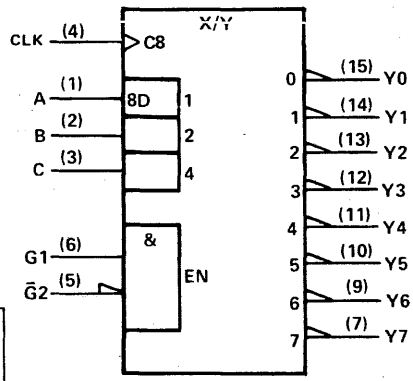

OR

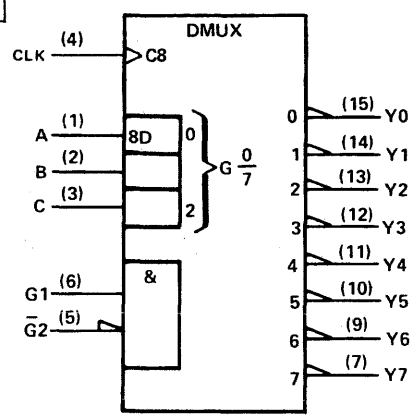

pin assignments

J, N PACKAGES				FH, FN PACKAGES			
1	A	9	Y6	1	nc	11	nc
2	B	10	Y5	2	A	12	Y6
3	C	11	Y4	3	B	13	Y5
4	CLK	12	Y3	4	C	14	Y4
5	$\overline{G2}$	13	Y2	5	CLK	15	Y3
6	G1	14	Y1	6	nc	16	nc
7	Y7	15	Y0	7	$\overline{G2}$	17	Y2
8	GND	16	V_{CC}	8	G1	18	Y1
				9	Y7	19	Y0
				10	GND	20	V_{CC}

† Pin numbers shown on logic symbols are for J and N packages only.
nc — no internal connection.

Copyright © 1983 by Texas Instruments Incorporated.

132

QUADRUPLE 2-INPUT POSITIVE-NAND SCHMITT TRIGGERS

typical performance

TYPE	HYSTERESIS	DELAY
'132	0.8 V	15 ns
'LS132	0.8 V	15 ns
'S132	0.55 V	8 ns

SN54132 (J,FH) SN74132 (J,N)
SN54LS132 (J,FH) SN74LS132 (J,N,FN)
SN54S132 (J,FH) SN74S132 (J,N,FN)

logic symbol†

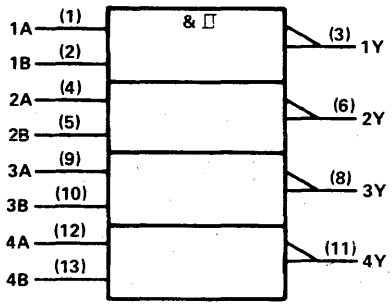

positive logic: $Y = \overline{AB}$

pin assignments

J, N PACKAGES				FH, FN PACKAGES			
1	1A	8	3Y	1	nc	11	nc
2	1B	9	3A	2	1A	12	3Y
3	1Y	10	3B	3	1B	13	3A
4	2A	11	4Y	4	1Y	14	3B
5	2B	12	4A	5	nc	15	nc
6	2Y	13	4B	6	2A	16	4Y
7	GND	14	V_{CC}	7	nc	17	nc
				8	2B	18	4A
				9	2Y	19	4B
				10	GND	20	V_{CC}

133

13-INPUT POSITIVE-NAND GATES

typical performance

TYPE	POWER	DELAY
'ALS133	2 mW	8 ns
'S133	19 mW	3 ns

SN54ALS133 (J,FH) SN74ALS133 (N,FN)
SN54S133 (J,FH) SN74S133 (J,N,FN)

logic symbol†

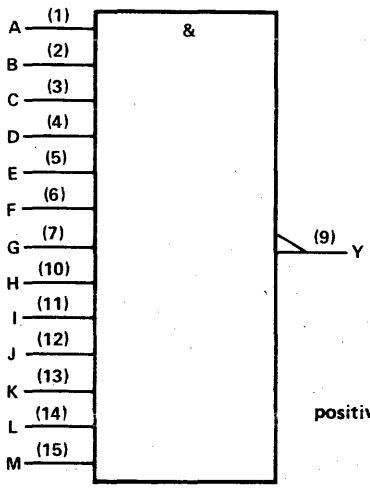

positive logic: $Y = \overline{ABCDEFGHIJKLM}$

pin assignments

J, N PACKAGES				FH, FN PACKAGES			
1	A	9	Y	1	nc	11	nc
2	B	10	H	2	A	12	Y
3	C	11	I	3	B	13	H
4	D	12	J	4	C	14	I
5	E	13	K	5	D	15	J
6	F	14	L	6	nc	16	nc
7	G	15	M	7	E	17	K
8	GND	16	V_{CC}	8	F	18	L
				9	G	19	M
				10	GND	20	V_{CC}

134

12-INPUT POSITIVE-NAND GATES WITH THREE-STATE OUTPUTS

typical performance

TYPE	DELAY	MAX SOURCE CURRENT	MAX SINK CURRENT
SN54S134	4.5 ns	−2 mA	20 mA
SN74S134	4.5 ns	−6.5 mA	20 mA

SN54S134 (J,FH) SN74S134 (J,N,FN)

logic symbol†

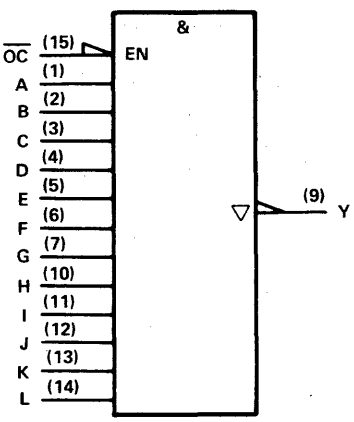

positive logic: $Y = \overline{ABCDEFGHIJKL}$

pin assignments

J, N PACKAGES				FH, FN PACKAGES			
1	A	9	Y	1	nc	11	nc
2	B	10	H	2	A	12	Y
3	C	11	I	3	B	13	H
4	D	12	J	4	C	14	I
5	E	13	K	5	D	15	J
6	F	14	L	6	nc	16	nc
7	G	15	$\overline{OC}$	7	E	17	K
8	GND	16	V_{CC}	8	F	18	L
				9	G	19	$\overline{OC}$
				10	GND	20	V_{CC}

† Pin numbers shown on logic symbols are for J and N packages only.
nc — no internal connection.

Copyright © 1983 by Texas Instruments Incorporated.

TEXAS INSTRUMENTS
POST OFFICE BOX 225012 • DALLAS, TEXAS 75265

135

QUAD EXCLUSIVE OR/NOR GATES

SN54S135 (J,FH) SN74S135 (J,N,FN)

typical performance

TYPE	POWER	DELAY
'S135	325 mW	8 ns

logic symbol†

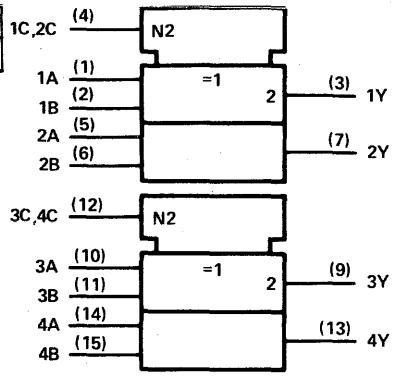

pin assignments

J, N PACKAGES				FH, FN PACKAGES			
1	1A	9	3Y	1	nc	11	nc
2	1B	10	3A	2	1A	12	3Y
3	1Y	11	3B	3	1B	13	3A
4	1C,2C	12	3C,4C	4	1Y	14	3B
5	2A	13	4Y	5	1C,2C	15	3C,4C
6	2B	14	4A	6	nc	16	nc
7	2Y	15	4B	7	2A	17	4Y
8	GND	16	V_{CC}	8	2B	18	4A
				9	2Y	19	4B
				10	GND	20	V_{CC}

positive logic: $Y = A \oplus B \oplus C = A\bar{B}\bar{C} + \bar{A}B\bar{C} + \bar{A}\bar{B}C + ABC$

136

QUAD EXCLUSIVE-OR GATES WITH OPEN-COLLECTOR OUTPUTS

SN54136 (J,FH) SN74136 (J,N)
SN54LS136 (J,FH) SN74LS136 (J,N,FN)

typical performance

TYPE	POWER	DELAY
'136	150 mW	27 ns
'LS136	30 mW	18 ns

logic symbol†

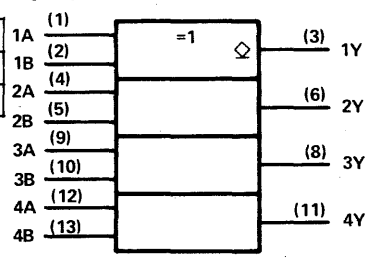

pin assignments

J, N PACKAGES				FH, FN PACKAGES			
1	1A	8	3Y	1	nc	11	nc
2	1B	9	3A	2	1A	12	3Y
3	1Y	10	3B	3	1B	13	3A
4	2A	11	4Y	4	1Y	14	3B
5	2B	12	4A	5	nc	15	nc
6	2Y	13	4B	6	2A	16	4Y
7	GND	14	V_{CC}	7	nc	17	nc
				8	2B	18	4A
				9	2Y	19	4B
				10	GND	20	V_{CC}

positive logic: $Y = A \oplus B = A\bar{B} + \bar{A}B$

† Pin numbers shown on logic symbols are for J and N packages only.
nc — no internal connection.

Copyright © 1983 by Texas Instruments Incorporated.

137

3- TO 8-LINE DECODERS/ DEMULTIPLEXERS WITH ADDRESS LATCHES

typical performance

TYPE	SELECT TIME	ENABLE TIME	TOTAL POWER
'ALS137	11 ns	10 ns	25 mW
'AS137			
'LS137	17.5 ns	16 ns	55 mW

SN54ALS137 (J,FH)
SN54AS137 (J,FH)
SN54LS137 (J,FH)

SN74ALS137 (N,FN)
SN74AS137 (N,FN)
SN74LS137 (J,N,FN)

logic symbol†

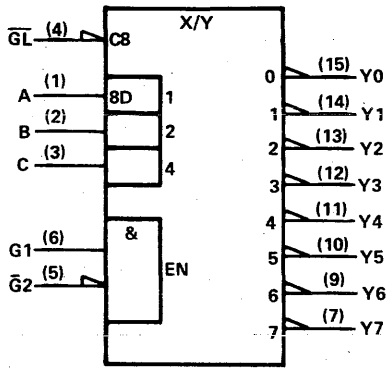

OR

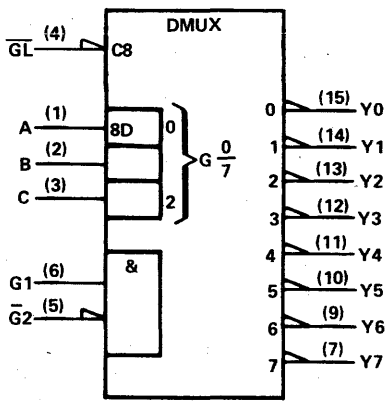

pin assignments

J, N PACKAGES				FH, FN PACKAGES			
1	A	9	Y6	1	nc	11	nc
2	B	10	Y5	2	A	12	Y6
3	C	11	Y4	3	B	13	Y5
4	$\overline{GL}$	12	Y3	4	C	14	Y4
5	$\overline{G2}$	13	Y2	5	$\overline{GL}$	15	Y3
6	G1	14	Y1	6	nc	16	nc
7	Y7	15	Y0	7	$\overline{G2}$	17	Y2
8	GND	16	V_{CC}	8	G1	18	Y1
				9	Y7	19	Y0
				10	GND	20	V_{CC}

† Pin numbers shown on logic symbols are for J and N packages only.
nc — no internal connection.

Copyright © 1983 by Texas Instruments Incorporated.

138

3- TO 8-LINE DECODERS/ DEMULTIPLEXERS

typical performance

TYPE	SELECT TIME	ENABLE TIME	TOTAL POWER
'ALS138	8.5 ns	9 ns	25 mW
'AS138			
'LS138	22 ns	21 ns	31 mW
'S138	8 ns	7 ns	245 mW

SN54ALS138 (J,FH) SN74ALS138 (N,FN)
SN54AS138 (J,FH) SN74AS138 (N,FN)
SN54LS138 (J,FH) SN74LS138 (J,N,FN)
SN54S138 (J,FH) SN74S138 (J,N,FN)

logic symbol†

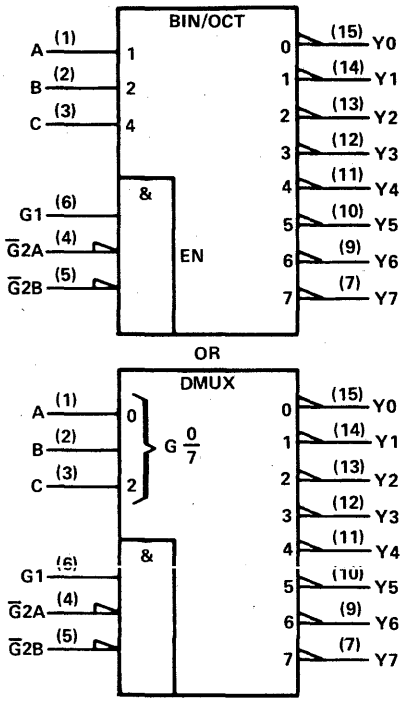

pin assignments

J, N PACKAGES				FH, FN PACKAGES			
1	A	9	Y6	1	nc	11	nc
2	B	10	Y5	2	A	12	Y6
3	C	11	Y4	3	B	13	Y5
4	$\overline{G}$2A	12	Y3	4	C	14	Y4
5	$\overline{G}$2B	13	Y2	5	$\overline{G}$2A	15	Y3
6	G1	14	Y1	6	nc	16	nc
7	Y7	15	Y0	7	$\overline{G}$2B	17	Y2
8	GND	16	V_{CC}	8	G1	18	Y1
				9	Y7	19	Y0
				10	GND	20	V_{CC}

139

DUAL 2- TO 4-LINE DECODERS/DEMULTIPLEXERS

typical performance

TYPE	SELECT TIME	ENABLE TIME	TOTAL POWER
'ALS139			
'AS139			
'LS139	22 ns	19 ns	34 mW
'S139	7.5 ns	6 ns	300 mW

SN54ALS139 (J,FH) SN74ALS139 (N,FN)
SN54AS139 (J,FH) SN74AS139 (N,FN)
SN54LS139 (J,FH) SN74LS139 (J,N,FN)
SN54S139 (J,FH) SN74S139 (J,N,FN)

logic symbol†

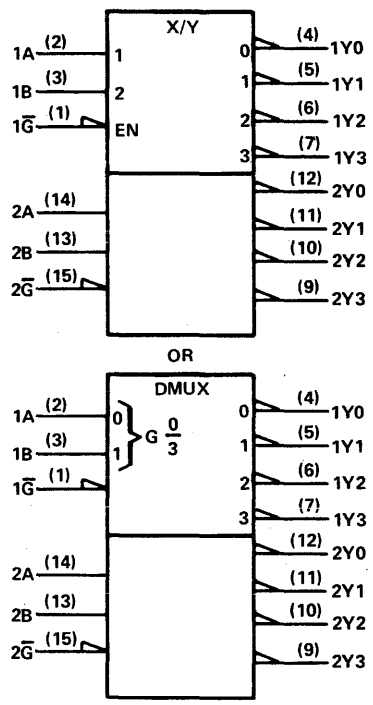

pin assignments

J, N PACKAGES				FH, FN PACKAGES			
1	1$\overline{G}$	9	2Y3	1	nc	11	nc
2	1A	10	2Y2	2	1$\overline{G}$	12	2Y3
3	1B	11	2Y1	3	1A	13	2Y2
4	1Y0	12	2Y0	4	1B	14	2Y1
5	1Y1	13	2B	5	1Y0	15	2Y0
6	1Y2	14	2A	6	nc	16	nc
7	1Y3	15	2$\overline{G}$	7	1Y1	17	2B
8	GND	16	V_{CC}	8	1Y2	18	2A
				9	1Y3	19	2$\overline{G}$
				10	GND	20	V_{CC}

† Pin numbers shown on logic symbols are for J and N packages only.
nc — no internal connection.

Copyright © 1983 by Texas Instruments Incorporated.

140

DUAL 4-INPUT POSITIVE-NAND 50-OHM LINE DRIVERS

typical performance

TYPE	LOW-LEVEL OUTPUT CURRENT	HIGH-LEVEL OUTPUT CURRENT	DELAY	POWER PER GATE
'S140	60 mA	–40 mA	4 ns	44 mW

SN54S140 (J,FH) SN74S140 (J,N,FN)

logic symbol†

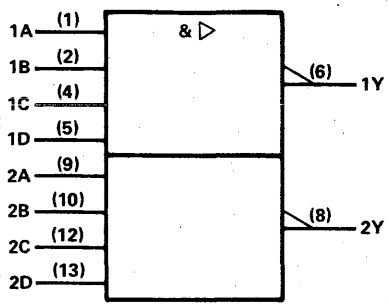

positive logic: $Y = \overline{ABCD}$

pin assignments

J, N PACKAGES			
1	1A	8	2Y
2	1B	9	2A
3	nc	10	2B
4	1C	11	nc
5	1D	12	2C
6	1Y	13	2D
7	GND	14	V_{CC}

FH, FN PACKAGES			
1	nc	11	nc
2	1A	12	2Y
3	1B	13	2A
4	nc	14	2B
5	nc	15	nc
6	1C	16	nc
7	nc	17	nc
8	1D	18	2C
9	1Y	19	2D
10	GND	20	V_{CC}

141

BCD-TO-DECIMAL DECODER/DRIVER

typical performance

TYPE	OUTPUT SINK CURRENT	OFF-STATE OUTPUT VOLTAGE	TOTAL POWER
'141	7 mA	60 V	80 mW

SN74141 (J,N)

logic symbol†

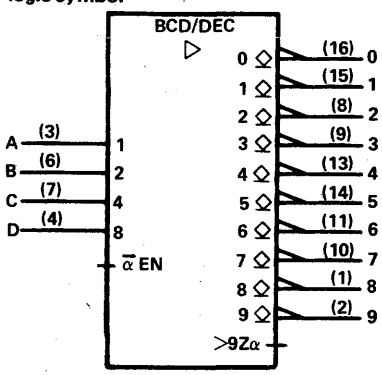

pin assignments

J, N PACKAGES			
1	8	9	3
2	9	10	7
3	A	11	6
4	D	12	GND
5	V_{CC}	13	4
6	B	14	5
7	C	15	1
8	2	16	0

142

COUNTER/LATCH/DECODER/DRIVER

typical performance

TYPE	OUTPUT SINK CURRENT	OFF-STATE OUTPUT VOLTAGE	TOTAL POWER
'142	7 mA	55 V	340 mW

SN74142 (J,N)

logic symbol†

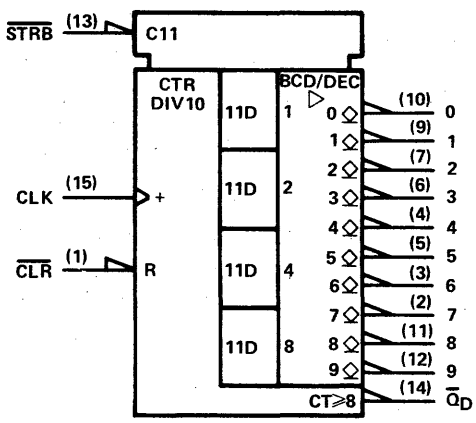

pin assignments

J, N PACKAGES			
1	$\overline{CLR}$	9	1
2	7	10	0
3	6	11	8
4	4	12	9
5	5	13	$\overline{STRB}$
6	3	14	$\overline{Q}_D$
7	2	15	CLK
8	GND	16	V_{CC}

† Pin numbers shown on logic symbols are for J and N packages only.
nc — no internal connection.

Copyright © 1983 by Texas Instruments Incorporated.

TEXAS INSTRUMENTS
POST OFFICE BOX 225012 • DALLAS, TEXAS 75265

143,144

COUNTERS/LATCHES/ DECODERS/DRIVERS

typical performance

TYPE	OUTPUT SINK CURRENT	OFF-STATE OUTPUT VOLTAGE
SN54143	15 mA*	7 V
SN74143	15 mA*	7 V
SN54144	20 mA	15 V
SN74144	25 mA	15 V

SN54143 (J) SN74143 (J,N)
SN54144 (J) SN74144 (J,N)

logic symbol†

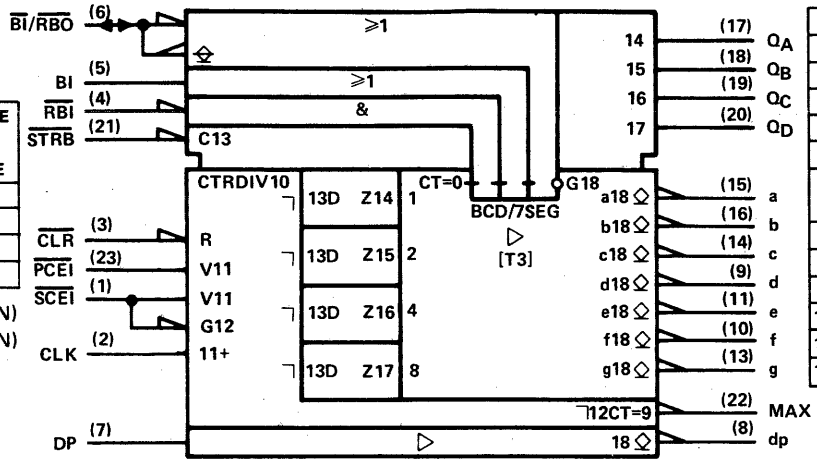

pin assignments

J, N PACKAGES			
1	SCEI	13	g
2	CLK	14	c
3	CLR	15	a
4	RBI	16	b
5	BI	17	QA
6	BI/RBO	18	AB
7	DP	19	QC
8	dp	20	QD
9	d	21	STRB
10	f	22	MAX
11	e	23	PCEI
12	GND	24	V_{CC}

145

BCD-TO-DECIMAL DECODERS/ DRIVERS FOR LAMPS, RELAYS, MOS

typical performance

TYPE	OUTPUT SINK CURRENT	OFF-STATE OUTPUT VOLTAGE	TOTAL POWER
'145	80 mA	15 V	215 mW
'54LS145	12 mA	15 V	35 mW
'74LS145	80 mA	15 V	35 mW

SN54145 (J,FH) SN74145 (J,N)
SN54LS145 (J,FH) SN74LS145 (J,N,FN)

logic symbol†

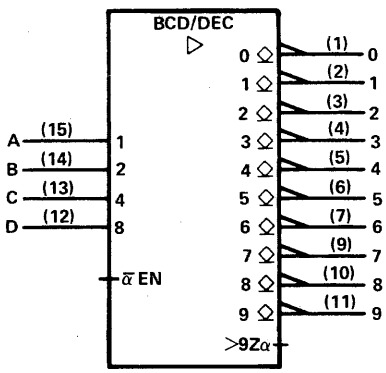

pin assignments

J, N PACKAGES			
1	0	9	7
2	1	10	8
3	2	11	9
4	3	12	D
5	4	13	C
6	5	14	B
7	6	15	A
8	GND	16	V_{CC}

FH, FN PACKAGES			
1	nc	11	nc
2	0	12	7
3	1	13	8
4	2	14	9
5	3	15	D
6	nc	16	nc
7	4	17	C
8	5	18	B
9	6	19	A
10	GND	20	V_{CC}

147

10-LINE DECIMAL TO 4-LINE BCD PRIORITY ENCODERS

typical performance

TYPE	POWER	DELAY
'147	225 mW	10 ns
'LS147	60 mW	15 ns

SN54147 (J,FH) SN74147 (J,N)
SN54LS147 (J,FH) SN74LS147 (J,N,FN)

logic symbol†

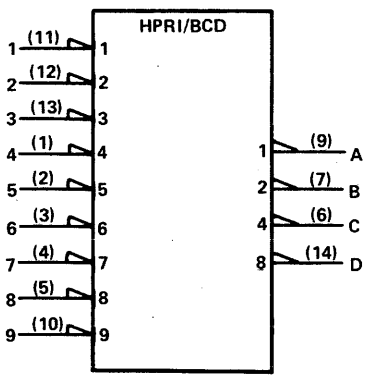

pin assignments

J, N PACKAGES			
1	4	9	A
2	5	10	9
3	6	11	1
4	7	12	2
5	8	13	3
6	C	14	D
7	B	15	nc
8	GND	16	V_{CC}

FH, FN PACKAGES			
1	nc	11	nc
2	4	12	A
3	5	13	9
4	6	14	1
5	7	15	2
6	nc	16	nc
7	8	17	3
8	C	18	D
9	B	19	nc
10	GND	20	V_{CC}

† Pin numbers shown on logic symbols are for J and N packages only.
nc — no internal connection.

FONT TABLE T3 — RESULTANT DISPLAYS USING '143, '144

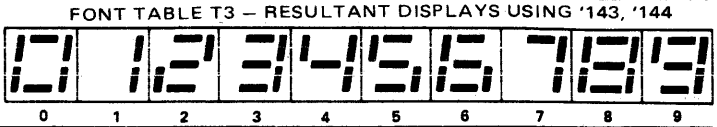

Copyright © 1983 by Texas Instruments Incorporated.

TEXAS INSTRUMENTS
POST OFFICE BOX 225012 • DALLAS, TEXAS 75265

© IC MASTER 1984

148

8- TO 3-LINE OCTAL PRIORITY ENCODERS

typical performance

TYPE	POWER	DELAY
'148	190 mW	12 ns
'LS148	60 mW	15 ns

SN54148 (J,FH) SN74148 (J,N)
SN54LS148 (J,FH) SN74LS148 (J,N,FN)

logic symbol†

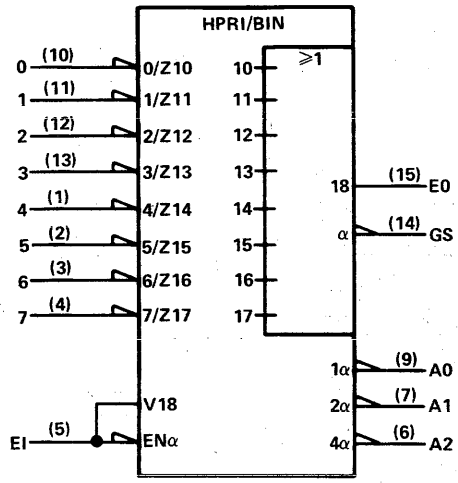

pin assignments

J, N PACKAGES				FH, FN PACKAGES			
1	4	9	A0	1	nc	11	nc
2	5	10	0	2	4	12	A0
3	6	11	1	3	5	13	0
4	7	12	2	4	6	14	1
5	E1	13	3	5	7	15	2
6	A2	14	GS	6	nc	16	nc
7	A1	15	E0	7	E1	17	3
8	GND	16	V_{CC}	8	A2	18	GS
				9	A1	19	E0
				10	GND	20	V_{CC}

150

1-OF-16 DATA SELECTORS/ MULTIPLEXERS

TYPE	DATA TO INV OUTPUT	FROM ENABLE	TOTAL POWER
'150	11 ns	18 ns	200 mW
'AS150			

SN54150 (J,FH) SN74150 (J,N)
SN54AS150 (J,FH) SN74AS150 (N,FN)

* 'AS150 Tri-State Output
'150 Totem-Pole Output

logic symbol†

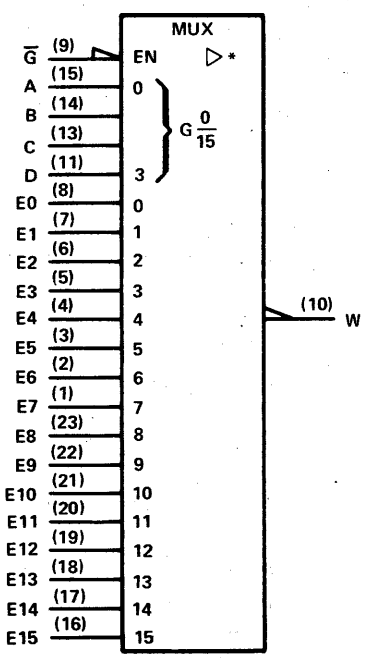

pin assignments

J, N PACKAGES				FH PACKAGE			
1	E7	13	C	1	nc	15	nc
2	E6	14	B	2	E7	16	C
3	E5	15	A	3	E6	17	B
4	E4	16	E15	4	E5	18	A
5	E3	17	E14	5	E4	19	E15
6	E2	18	E13	6	E3	20	E14
7	E1	19	E12	7	E2	21	E13
8	E0	20	E11	8	nc	22	nc
9	G̅	21	E10	9	E1	23	E12
10	W	22	E9	10	E0	24	E11
11	D	23	E8	11	G̅	25	E10
12	GND	24	V_{CC}	12	W	26	E9
				13	D	27	E8
				14	GND	28	V_{CC}

† Pin numbers shown on logic symbols are for J and N packages only.
nc — no internal connection.

Copyright © 1983 by Texas Instruments Incorporated.

151

1-OF-8 DATA SELECTORS/MULTIPLEXERS

typical performance

TYPE	DELAY TIMES			TOTAL POWER
	DATA TO INV OUTPUT	DATA TO NON-INV OUTPUT	FROM ENABLE	
'151A	8 ns	16 ns	22 ns	145 mW
'ALS151	6 ns	5 ns	4.5 ns	30 mW
'AS151	3 ns	3.5 ns	5 ns	130 mW
'LS151	11 ns	18 ns	27 ns	30 mW
'S151	4.5 ns	8 ns	9 ns	225 mW

SN54151A (J,FH) SN74151A (J,N)
SN54ALS151 (J,FH) SN74ALS151 (N,FN)
SN54AS151 (J,FH) SN74AS151 (N,FN)
SN54LS151 (J,FH) SN74LS151 (J,N,FN)
SN54S151 (J,FH) SN74S151 (J,N,FN)

logic symbol†

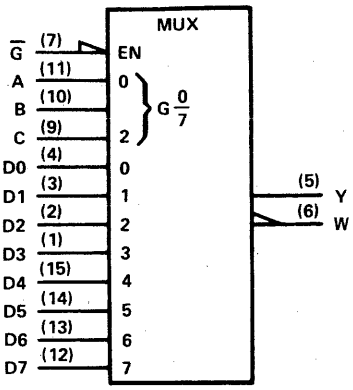

pin assignments

J, N PACKAGES				FH, FN PACKAGES			
1	D3	9	C	1	nc	11	nc
2	D2	10	B	2	D3	12	C
3	D1	11	A	3	D2	13	B
4	D0	12	D7	4	D1	14	A
5	Y	13	D6	5	D0	15	D7
6	W	14	D5	6	nc	16	nc
7	G̅	15	D4	7	Y	17	D6
8	GND	16	V_{CC}	8	W	18	D5
				9	G̅	19	D4
				10	GND	20	V_{CC}

152

1-of-8 DATA SELECTORS/MULTIPLEXERS

typical performance

TYPE	DELAY TIMES		TOTAL POWER
	DATA TO INV OUTPUT	FROM ENABLE	
'152A	8 ns		130 mW
'LS152	11 ns	18 ns	28 mW

SN54152A (J,FH)
SN54LS152 (J,FH) SN74LS152 (J,N,FN)

logic symbol†

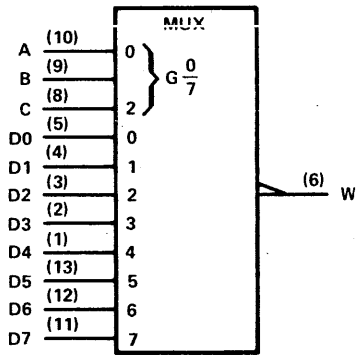

pin assignments

J, N PACKAGES				FH, FN PACKAGES			
1	D4	8	C	1	nc	11	nc
2	D3	9	B	2	D4	12	C
3	D2	10	A	3	D3	13	B
4	D1	11	D7	4	D2	14	A
5	D0	12	D6	5	nc	15	nc
6	W	13	D5	6	D1	16	D7
7	GND	14	V_{CC}	7	nc	17	nc
				8	D0	18	D6
				9	W	19	D5
				10	GND	20	V_{CC}

153

DUAL 4-LINE TO 1-LINE DATA SELECTORS/MULTIPLEXERS

typical performance

TYPE	DELAY TIMES		TOTAL POWER
	DATA TO NON-INV OUTPUT	FROM ENABLE	
'153	14 ns	17 ns	180 mW
'ALS153	5 ns	4.5 ns	31.5 mW
'AS153	3.5 ns	5 ns	105 mW
'L153	27 ns	34 ns	90 mW
'LS153	14 ns	17 ns	31 mW
'S153	6 ns	9.5 ns	225 mW

SN54153 (J,FH) SN74153 (J,N)
SN54ALS153 (J,FH) SN74ALS153 (N,FN)
SN54AS153 (J,FH) SN74AS153 (N,FN)
SN54L153 (J)
SN54LS153 (J,FH) SN74LS153 (J,N,FN)
SN54S153 (J,FH) SN74S153 (J,N,FN)

logic symbol†

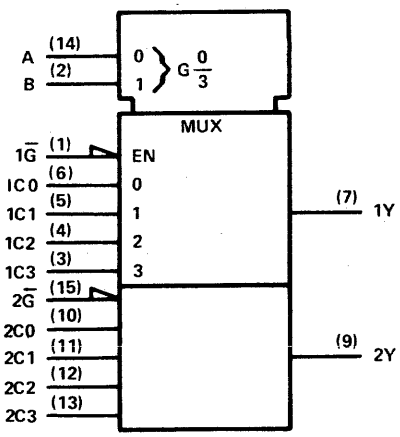

pin assignments

J, N PACKAGES				FH, FN PACKAGES			
1	1G̅	9	2Y	1	nc	11	nc
2	B	10	2C0	2	1G̅	12	2Y
3	1C3	11	2C1	3	B	13	2C0
4	1C2	12	2C2	4	1C3	14	2C1
5	1C1	13	2C3	5	1C2	15	2C2
6	1C0	14	A	6	nc	16	nc
7	1Y	15	2G̅	7	1C1	17	2C3
8	GND	16	V_{CC}	8	1C0	18	A
				9	1Y	19	2G̅
				10	GND	20	V_{CC}

† Pin numbers shown on logic symbols are for J and N packages only.
nc – no internal connection.

Copyright © 1983 by Texas Instruments Incorporated.

154

4-LINE TO 16-LINE DECODERS/ DEMULTIPLEXERS

typical performance

TYPE	SELECT TIME	ENABLE TIME	TOTAL POWER
'154	23 ns	19 ns	170 mW
'L154	46 ns	38 ns	85 mW

SN54154 (J,FH) SN74154 (J,N)
SN54L154 (J)

logic symbol†

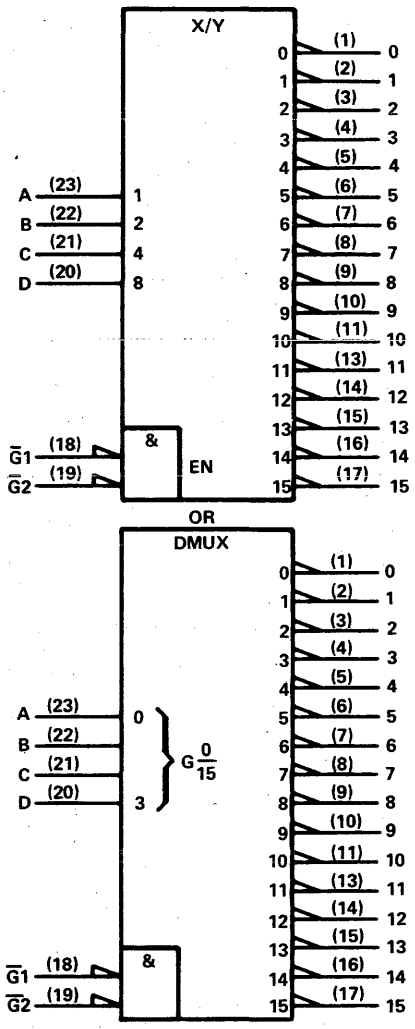

pin assignments

J, N PACKAGES				FH PACKAGE			
1	0	13	11	1	nc	15	nc
2	1	14	12	2	0	16	11
3	2	15	13	3	1	17	12
4	3	16	14	4	2	18	13
5	4	17	15	5	3	19	14
6	5	18	$\overline{G1}$	6	4	20	15
7	6	19	$\overline{G2}$	7	5	21	$\overline{G1}$
8	7	20	D	8	nc	22	nc
9	8	21	C	9	6	23	$\overline{G2}$
10	9	22	B	10	7	24	D
11	10	23	A	11	8	25	C
12	GND	24	V_{CC}	12	9	26	B
				13	10	27	A
				14	GND	28	V_{CC}

† Pin numbers shown on logic symbols are for J and N packages only;
nc — no internal connection.

Copyright © 1983 by Texas Instruments Incorporated.

155

DECODERS/DEMULTIPLEXERS

(totem pole outputs)

typical performance

TYPE	SELECT TIME	ENABLE TIME	TOTAL POWER
'155	21 ns	16 ns	125 mW
'LS155	18 ns	15 ns	30 mW

SN54155 (J,FH) SN74155 (J,N)
SN54LS155 (J,FH) SN74LS155 (J,N,FN)

logic symbol†

2-line to 4-line Decoder

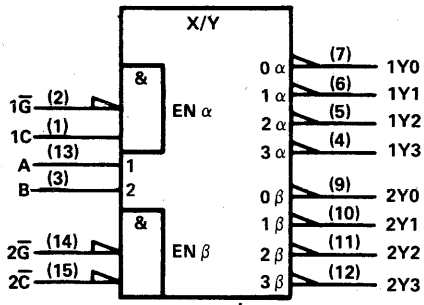

pin assignments

J, N PACKAGES				FH, FN PACKAGES			
1	1C	9	2Y0	1	nc	11	nc
2	1$\overline{G}$	10	2Y1	2	1C	12	2Y0
3	B	11	2Y2	3	1$\overline{G}$	13	2Y1
4	1Y3	12	2Y3	4	B	14	2Y2
5	1Y2	13	A	5	1Y3	15	2Y3
6	1Y1	14	2$\overline{G}$	6	nc	16	nc
7	1Y0	15	2$\overline{C}$	7	1Y2	17	A
8	GND	16	V_{CC}	8	1Y1	18	2$\overline{G}$
				9	1Y0	19	2$\overline{C}$
				10	GND	20	V_{CC}

logic symbol†

3-line to 8-line Decoder

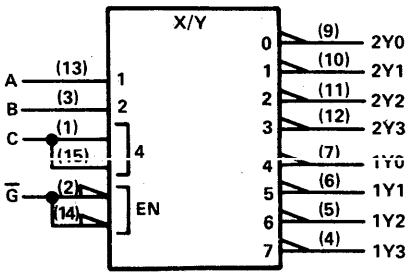

logic symbol†

1-line to 4-line DMUX

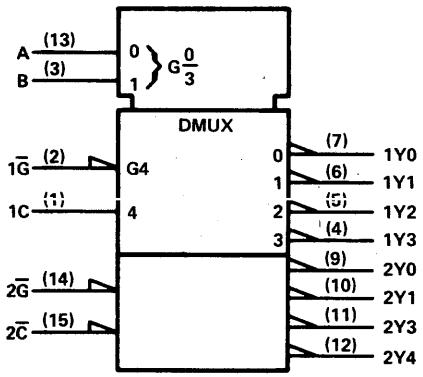

logic symbol†

1-line to 8-line DMUX

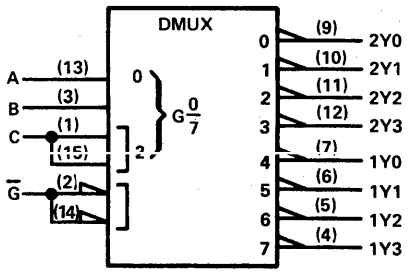

156

DECODERS/DEMULTIPLEXERS

(open-collector outputs)

typical performance

TYPE	SELECT TIME	ENABLE TIME	TOTAL POWER
'156	23 ns	18 ns	125 mW
'LS156	33 ns	26 ns	31 mW

SN54156 (J,FH) SN74156 (J,N)
SN54LS156 (J,FH) SN74LS156 (J,N,FN)

logic symbol†

2-line to 4-line Decoder

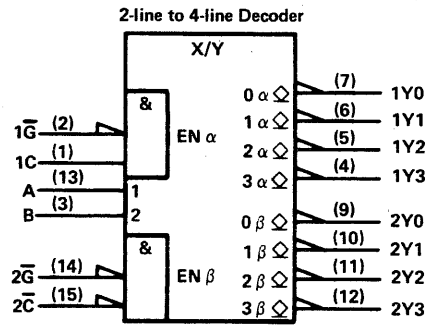

pin assignments

J, N PACKAGES				FH, FN PACKAGES			
1	1C	9	2Y0	1	nc	11	nc
2	1$\overline{G}$	10	2Y1	2	1C	12	2Y0
3	B	11	2Y2	3	1$\overline{G}$	13	2Y1
4	1Y3	12	2Y3	4	B	14	2Y2
5	1Y2	13	A	5	1Y3	15	2Y3
6	1Y1	14	2$\overline{G}$	6	nc	16	nc
7	1Y0	15	2$\overline{C}$	7	1Y2	17	A
8	GND	16	V_{CC}	8	1Y1	18	2$\overline{G}$
				9	1Y0	19	2$\overline{C}$
				10	GND	20	V_{CC}

logic symbol†

3-line to 8-line Decoder

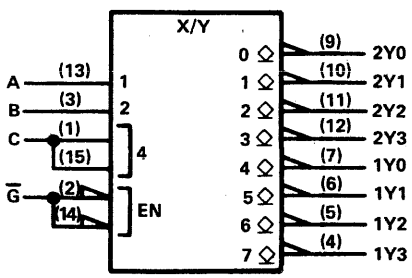

logic symbol†

1-line to 4-line DMUX

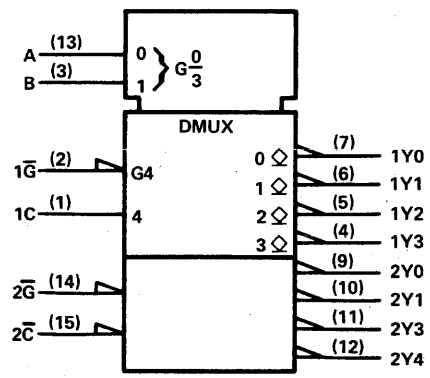

logic symbol†

1-line to 8-line DMUX

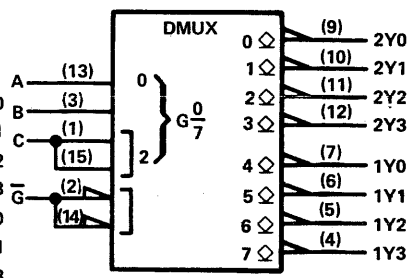

† Pin numbers shown on logic symbols are for J and N packages only.
nc — no internal connection.

Copyright © 1983 by Texas Instruments Incorporated.

157

QUAD 2- TO 1-LINE DATA SELECTORS/MULTIPLEXERS

(non-inverted data outputs)

typical performance

TYPE	DELAY TIMES		TOTAL POWER
	DATA TO NON-INV OUTPUT	FROM ENABLE	
'157	9 ns	14 ns	150 mW
'ALS157	5 ns	6.5 ns	39 mW
'AS157	3.5 ns	7.5 ns	95 mW
'L157	18 ns	27 ns	75 mW
'LS157	9 ns	14 ns	49 mW
'S157	5 ns	8 ns	250 mW

SN54157 (J,FH) SN74157 (J,N)
SN54ALS157 (J,FH) SN74ALS157 (N,FN)
SN54AS157 (J,FH) SN74AS157 (N,FN)
SN54L157 (J)
SN54LS157 (J,FH) SN74LS157 (J,N,FN)
SN54S157 (J,FH) SN74S157 (J,N,FN)

logic symbol†

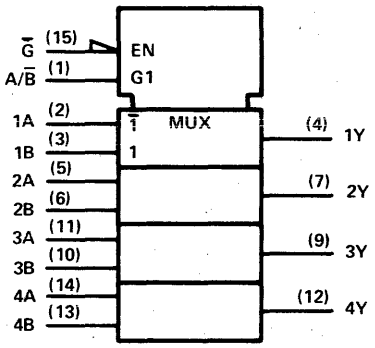

pin assignments

J, N PACKAGES				FH, FN PACKAGES			
1	A/B	9	3Y	1	nc	11	nc
2	1A	10	3B	2	A/B	12	3Y
3	1B	11	3A	3	1A	13	3B
4	1Y	12	4Y	4	1B	14	3A
5	2A	13	4B	5	1Y	15	4Y
6	2B	14	4A	6	nc	16	nc
7	2Y	15	G	7	2A	17	4B
8	GND	16	V_{CC}	8	2B	18	4A
				9	2Y	19	G
				10	GND	20	V_{CC}

158

QUAD 2- TO 1-LINE DATA SELECTORS/MULTIPLEXERS

(inverted data outputs)

typical performance

TYPE	DELAY TIMES		TOTAL POWER
	DATA TO INV OUTPUT	FROM ENABLE	
'ALS158	5 ns	6.5 ns	11.5 mW
'AS158	1.2 ns	6 ns	78 mW
'LS158	7 ns	12 ns	24 mW
'S158	4 ns	7 ns	195 mW

SN54ALS158 (J,FH) SN74ALS158 (N,FN)
SN54AS158 (J,FH) SN74AS158 (N,FN)
SN54LS158 (J,FH) SN74LS158 (J,N,FN)
SN54S158 (J,FH) SN74S158 (J,N,FN)

logic symbol†

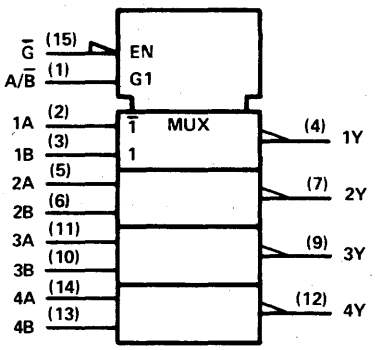

pin assignments

J, N PACKAGES				FH, FN PACKAGES			
1	A/B	9	3Y	1	nc	11	nc
2	1A	10	3B	2	A/B	12	3Y
3	1B	11	3A	3	1A	13	3B
4	1Y	12	4Y	4	1B	14	3A
5	2A	13	4B	5	1Y	15	4Y
6	2B	14	4A	6	nc	16	nc
7	2Y	15	G	7	2A	17	4B
8	GND	16	V_{CC}	8	2B	18	4A
				9	2Y	19	G
				10	GND	20	V_{CC}

† Pin numbers shown on logic symbols are for J and N packages only.
nc — no internal connection.

See ALS/AS availability at front of this Product Guide.

Copyright © 1983 by Texas Instruments Incorporated.

159

4- TO 16-LINE DECODERS/ DEMULTIPLEXERS
(open-collector outputs)

typical performance

TYPE	SELECT TIME	ENABLE TIME	TOTAL POWER
'159	24 ns	19 ns	170 mW

SN54159 (J,FH) SN74159 (J,N)

logic symbol, '159†

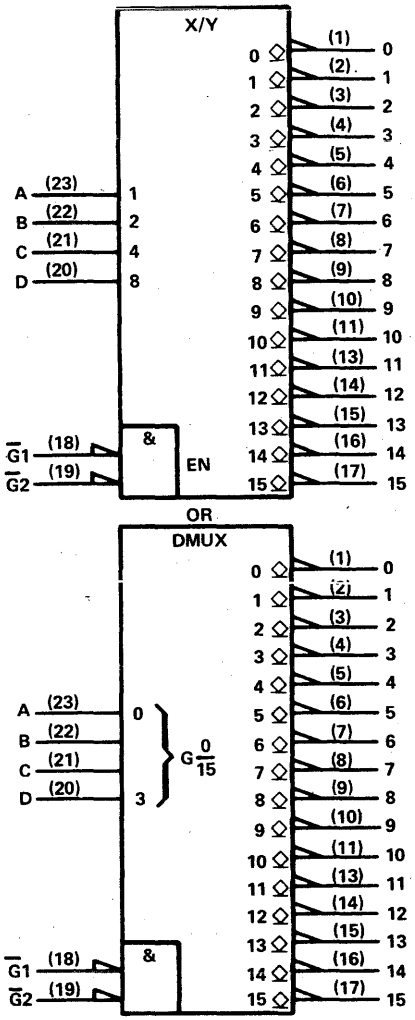

pin assignments

J, N PACKAGES				FH PACKAGE†			
1	0	13	11	1	nc	15	nc
2	1	14	12	2	0	16	11
3	2	15	13	3	1	17	12
4	3	16	14	4	2	18	13
5	4	17	15	5	3	19	14
6	5	18	$\overline{G1}$	6	4	20	15
7	6	19	$\overline{G2}$	7	5	21	$\overline{G1}$
8	7	20	D	8	nc	22	nc
9	8	21	C	9	6	23	$\overline{G2}$
10	9	22	B	10	7	24	D
11	10	23	A	11	8	25	C
12	GND	24	V_{CC}	12	9	26	B
				13	10	27	A
				14	GND	28	V_{CC}

† Pin numbers shown on logic symbols are for J and N packages only.
nc — no internal connection.

Copyright © 1983 by Texas Instruments Incorporated.

TEXAS INSTRUMENTS
POST OFFICE BOX 225012 • DALLAS, TEXAS 75265

© IC MASTER 1984

160

SYNCHRONOUS 4-BIT COUNTERS

(decade, direct clear)

typical performance

TYPE	COUNT FREQ	CLEAR	TOTAL POWER
'160	25 MHz	ASYNC-L	305 mW
'ALS160A	40 MHz	ASYNC-L	60 mW
'AS160		ASYNC-L	
'LS160A	25 MHz	ASYNC-L	93 mW

SN54160 (J,FH) SN74160 (J,N)
SN54ALS160A (J,FH) SN74ALS160A (N,FN)
SN54AS160 (J,FH) SN74AS160 (N,FN)
SN54LS160A (J,FH) SN74LS160A (J,N,FN)

logic symbol, '160†

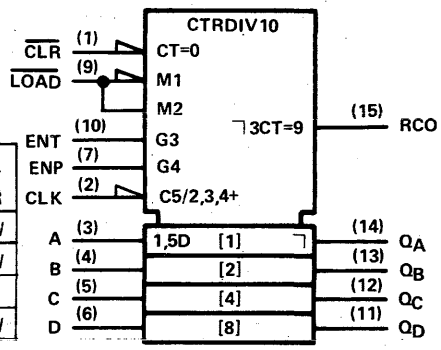

logic symbol, 'LS160A†

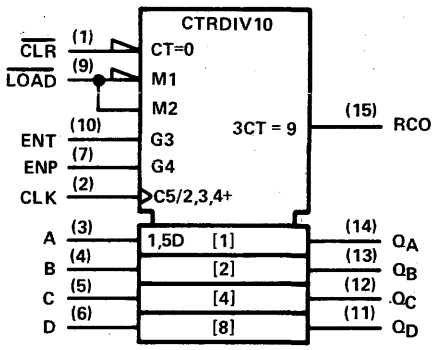

pin assignments

J, N PACKAGES				FH, FN PACKAGES			
1	CLR	9	LOAD	1	nc	11	nc
2	CLK	10	ENT	2	CLR	12	LOAD
3	A	11	Q_D	3	CLK	13	ENT
4	B	12	Q_C	4	A	14	Q_D
5	C	13	Q_B	5	B	15	Q_C
6	D	14	Q_A	6	nc	16	nc
7	ENP	15	RCO	7	C	17	Q_B
8	GND	16	V_{CC}	8	D	18	Q_A
				9	ENP	19	RCO
				10	GND	20	V_{CC}

161

SYNCHRONOUS 4-BIT COUNTERS

(binary, direct clear)

typical performance

TYPE	COUNT FREQ	CLEAR	TOTAL POWER
'161	25 MHz	ASYNC-L	305 mW
'ALS161A	40 MHz	ASYNC-L	60 mW
'AS161		ASYNC-L	
'LS161A	25 MHz	ASYNC-L	93 mW

SN54161 (J,FH) SN74161 (J,N)
SN54ALS161A (J,FH) SN74ALS161A (N,FN)
SN54AS161 (J,FH) SN74AS161 (N,FN)
SN54LS161A (J,FH) SN74LS161A (J,N,FN)

logic symbol, '161†

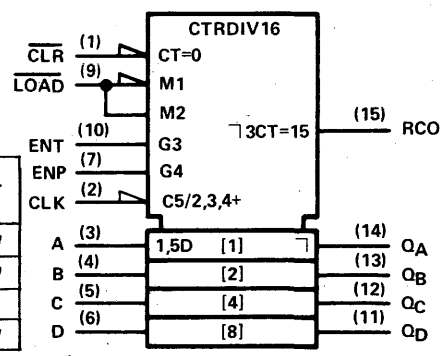

logic symbol, 'LS161A†

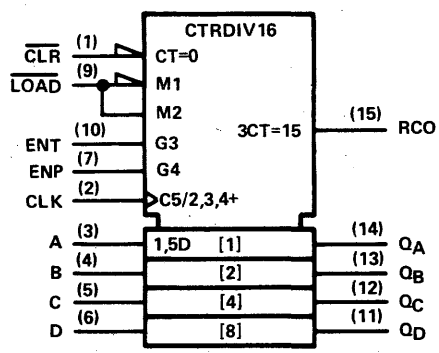

pin assignments

J, N PACKAGES				FH, FN PACKAGES			
1	CLR	9	LOAD	1	nc	11	nc
2	CLK	10	ENT	2	CLR	12	LOAD
3	A	11	Q_D	3	CLK	13	ENT
4	B	12	Q_C	4	A	14	Q_D
5	C	13	Q_B	5	B	15	Q_C
6	D	14	Q_A	6	nc	16	nc
7	ENP	15	RCO	7	C	17	Q_B
8	GND	16	V_{CC}	8	D	18	Q_A
				9	ENP	19	RCO
				10	GND	20	V_{CC}

† Pin numbers shown on logic symbols are for J and N packages only.
nc — no internal connection.

See ALS/AS availability at front of this Product Guide.

Copyright © 1983 by Texas Instruments Incorporated.

TEXAS INSTRUMENTS
POST OFFICE BOX 225012 • DALLAS, TEXAS 75265

162

SYNCHRONOUS 4-BIT COUNTERS

(decade, synchronous clear)

typical performance

TYPE	COUNT FREQ	CLEAR	TOTAL POWER
'162	25 MHz	SYNC-L	305 mW
'ALS162A	40 MHz	SYNC-L	60 mW
'AS162		SYNC-L	
'LS162A	25 MHz	SYNC-L	93 mW
'S162	40 MHz	SYNC-L	475 mW

SN54162 (J,FH) SN74162 (J,N)
SN54ALS162A (J,FH) SN74ALS162A (N,FN)
SN54AS162 (J,FH) SN74AS162 (N,FN)
SN54LS162A (J,FH) SN74LS162A (J,N,FN)
SN54S162 (J,FH) SN74S162 (J,N,FN)

logic symbol, '162†

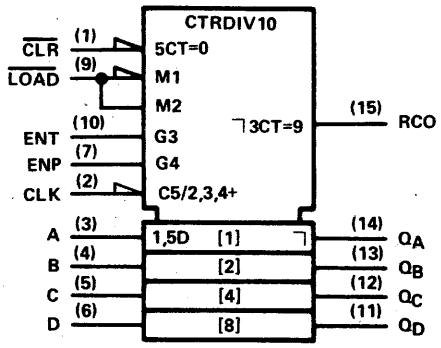

logic symbol, 'LS162A, 'S162†

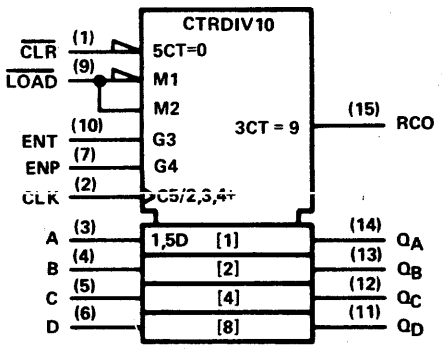

pin assignments

J, N PACKAGES				FH, FN PACKAGES			
1	CLR	9	LOAD	1	nc	11	nc
2	CLK	10	ENT	2	CLR	12	LOAD
3	A	11	Q_D	3	CLK	13	ENT
4	B	12	Q_C	4	A	14	Q_D
5	C	13	Q_B	5	B	15	Q_C
6	D	14	Q_A	6	nc	16	nc
7	ENP	15	RCO	7	C	17	Q_B
8	GND	16	V_{CC}	8	D	18	Q_A
				9	ENP	19	RCO
				10	GND	20	V_{CC}

163

SYNCHRONOUS 4-BIT COUNTERS

(binary, synchronous clear)

typical performance

TYPE	COUNT FREQ	CLEAR	TOTAL POWER
'163	25 MHz	SYNC-L	305 mW
'ALS163A	40 MHz	SYNC-L	60 mW
'AS163		SYNC-L	
'LS163A	25 MHz	SYNC-L	93 mW
'S163	40 MHz	SYNC-L	475 mW

SN54163 (J,FH) SN74163 (J,N)
SN54ALS163A (J,FH) SN74ALS163A (N,FN)
SN54AS163 (J,FH) SN74AS163 (N,FN)
SN54LS163A (J,FH) SN74LS163A (J,N,FN)
SN54S163 (J,FH) SN74S163 (J,N,FN)

logic symbol, '163†

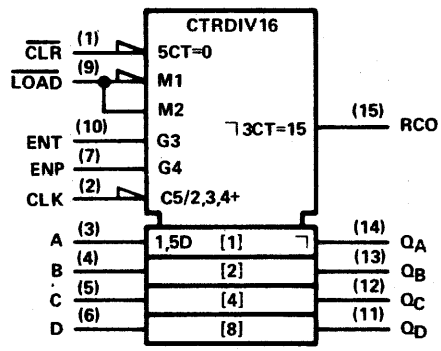

logic symbol, 'LS163A, 'S163†

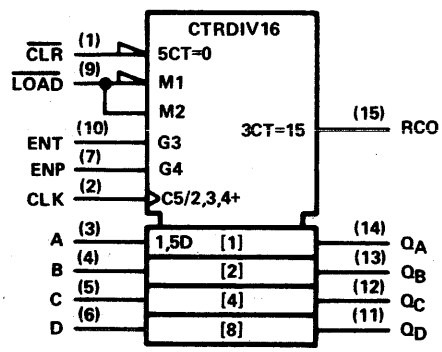

pin assignments

J, N PACKAGES				FH, FN PACKAGES			
1	CLR	9	LOAD	1	nc	11	nc
2	CLK	10	ENT	2	CLR	12	LOAD
3	A	11	Q_D	3	CLK	13	ENT
4	B	12	Q_C	4	A	14	Q_D
5	C	13	Q_B	5	B	15	Q_C
6	D	14	Q_A	6	nc	16	nc
7	ENP	15	RCO	7	C	17	Q_B
8	GND	16	V_{CC}	8	D	18	Q_A
				9	ENP	19	RCO
				10	GND	20	V_{CC}

† Pin numbers shown on logic symbols are for J and N packages only.
nc — no internal connection.

Copyright © 1983 by Texas Instruments Incorporated.

164

8-BIT PARALLEL OUT SERIAL SHIFT REGISTERS

(asynchronous clear)

typical performance

TYPE	SHIFT FREQ	SERIAL DATA INPUT	ASYNC CLEAR	TOTAL POWER
'164	25 MHz	GATED D	LOW	167 mW
'ALS164		GATED D	LOW	
'L164	12 MHz	GATED D	LOW	84 mW
'LS164	25 MHz	GATED D	LOW	80 mW

SN54164 (J,FH) SN74164 (J,N)
SN54ALS164 (J,FH) SN74ALS164 (N,FN)
SN54L164 (J)
SN54LS164 (J,FH) SN74LS164 (J,N,FN)

logic symbol†

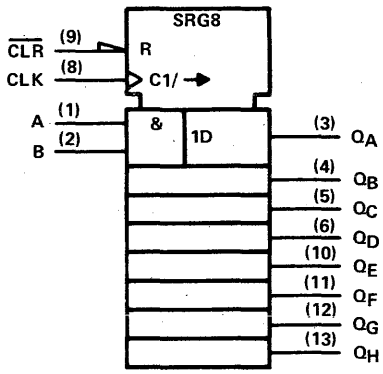

pin assignments

J, N PACKAGES				FH, FN PACKAGES			
1	A	8	CLK	1	nc	11	nc
2	B	9	$\overline{CLR}$	2	A	12	CLK
3	Q_A	10	Q_E	3	B	13	$\overline{CLR}$
4	Q_B	11	Q_F	4	Q_A	14	Q_E
5	Q_C	12	Q_G	5	nc	15	nc
6	Q_D	13	Q_H	6	Q_B	16	Q_F
7	GND	14	V_{CC}	7	nc	17	nc
				8	Q_C	18	Q_G
				9	Q_D	19	Q_H
				10	GND	20	V_{CC}

165

8-BIT SHIFT REGISTERS

(parallel-load with complementary outputs)

typical performance

TYPE	SHIFT FREQ	SERIAL DATA INPUT	ASYNC CLEAR	TOTAL POWER
'165	25 MHz	D	NONE	210 mW
'ALS165				
'LS165	35 MHz	D	NONE	105 mW

SN54165 (J,FH) SN74165 (J,N)
SN54ALS165 (J,FH) SN74ALS165 (N,FN)
SN54LS165 (J,FH) SN74LS165 (J,N,FN)

logic symbol†

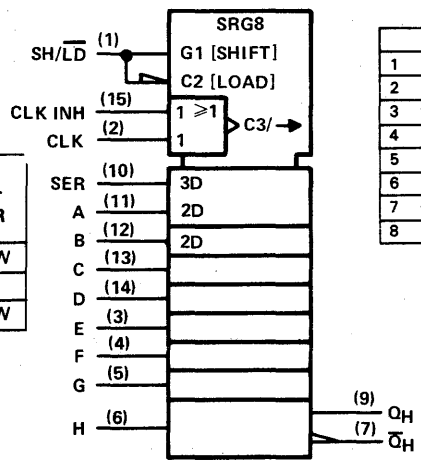

pin assignments

J, N PACKAGES				FH, FN PACKAGES			
1	SH/$\overline{LD}$	9	Q_H	1	nc	11	nc
2	CLK	10	SER	2	SH/$\overline{LD}$	12	Q_H
3	E	11	A	3	CLK	13	SER
4	F	12	B	4	E	14	A
5	G	13	C	5	F	15	B
6	H	14	D	6	nc	16	nc
7	$\overline{Q}_H$	15	CLK INH	7	G	17	C
8	GND	16	V_{CC}	8	H	18	D
				9	$\overline{Q}_H$	19	CLK INH
				10	GND	20	V_{CC}

166

8-BIT SHIFT REGISTERS

(parallel/serial input; serial output)

typical performance

TYPE	SHIFT FREQ	SERIAL DATA INPUT	ASYNC CLEAR	TOTAL POWER
'166	20 MHz	D	LOW	360 mW
'ALS166		D	LOW	
'LS166	35 MHz	D	LOW	110 mW

SN54166 (J,FH) SN74166 (J,N)
SN54ALS166 (J,FH) SN74ALS166 (N,FN)
SN54LS166 (J,FH) SN74LS166 (J,N,FN)

logic symbol†

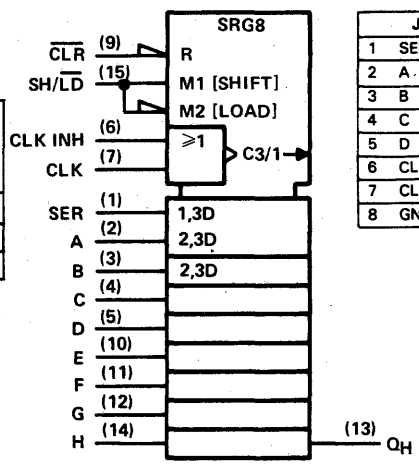

pin assignments

J, N PACKAGES				FH, FN PACKAGES			
1	SER	9	$\overline{CLR}$	1	nc	11	nc
2	A	10	E	2	SER	12	$\overline{CLR}$
3	B	11	F	3	A	13	E
4	C	12	G	4	B	14	F
5	D	13	Q_H	5	C	15	G
6	CLK INH	14	H	6	nc	16	nc
7	CLK	15	SH/$\overline{LD}$	7	D	17	Q_H
8	GND	16	V_{CC}	8	CLK INH	18	H
				9	CLK	19	SH/$\overline{LD}$
				10	GND	20	V_{CC}

† Pin numbers shown on logic symbols are for J and N packages only.
nc – no internal connection.

Copyright © 1983 by Texas Instruments Incorporated.

167

SYNCHRONOUS DECADE RATE MULTIPLIERS

typical performance

TYPE	COUNT FREQ	CLEAR	TOTAL POWER
'167	25 MHz	ASYNC-H	270 mW

SN54167 (J,FH) SN74167 (J,N)

logic symbol†

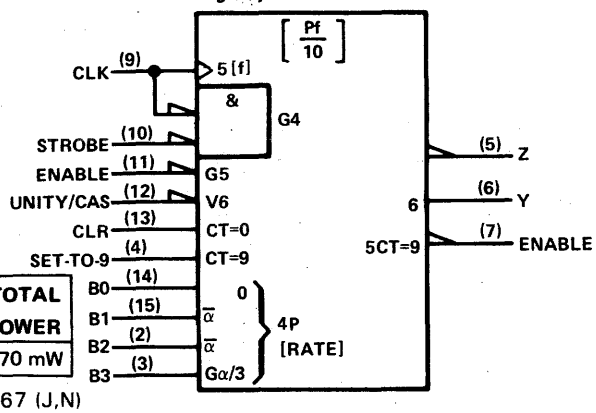

pin assignments

J, N PACKAGES				FH PACKAGE			
1	nc	9	CLK	1	nc	11	nc
2	B2	10	STRB	2	nc	12	CLK
3	B3	11	ENin	3	B2	13	STRB
4	SET-TO-9	12	UNITY/CAS	4	B3	14	ENin
5	Z	13	CLR	5	SET-TO-9	15	UNITY/CAS
6	Y	14	B0	6	nc	16	nc
7	ENout	15	B1	7	Z	17	CLR
8	GND	16	V_{CC}	8	Y	18	B0
				9	ENout	19	B1
				10	GND	20	V_{CC}

168

4-BIT UP/DOWN SYNCHRONOUS COUNTERS

(decade)

typical performance

TYPE	COUNT FREQ	TOTAL POWER
'ALS168A	40 MHz	75 mW
'AS168		
'S168	40 MHz	500 mW

SN54ALS168A (J,FH) SN74ALS168A (N,FN)
SN54AS168 (J,FH) SN74AS168 (N,FN)
SN54S168 (J,FH) SN74S168 (J,N,FN)

logic symbol†

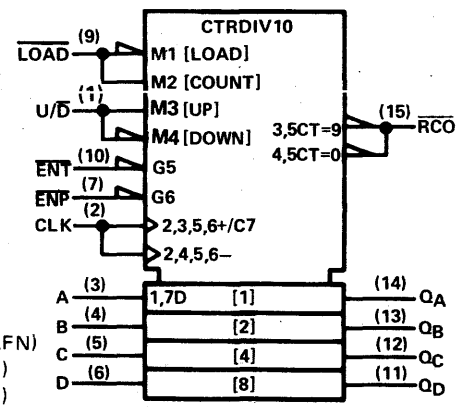

pin assignments

J, N PACKAGES				FH, FN PACKAGES			
1	U/D	9	LOAD	1	nc	11	nc
2	CLK	10	ENT	2	U/D	12	LOAD
3	A	11	Q_D	3	CLK	13	ENT
4	B	12	Q_C	4	A	14	Q_D
5	C	13	Q_B	5	B	15	Q_C
6	D	14	Q_A	6	nc	16	nc
7	ENP	15	RCO	7	C	17	Q_B
8	GND	16	V_{CC}	8	D	18	Q_A
				9	ENP	19	RCO
				10	GND	20	V_{CC}

169

4-BIT UP/DOWN SYNCHRONOUS COUNTERS

(binary)

typical performance

TYPE	COUNT FREQ	TOTAL POWER
'ALS169A	40 MHz	75 mW
'AS169		
'LS169B	35 MHz	140 mW
'S169	40 MHz	500 mW

SN54ALS169A (J,FH) SN74ALS169A (N,FN)
SN54AS169 (J,FH) SN74AS169 (N,FN)
SN54LS169B (J,FH) SN74LS169B (J,N,FN)
SN54S169 (J,FH) SN74S169 (J,N,FN)

logic symbol†

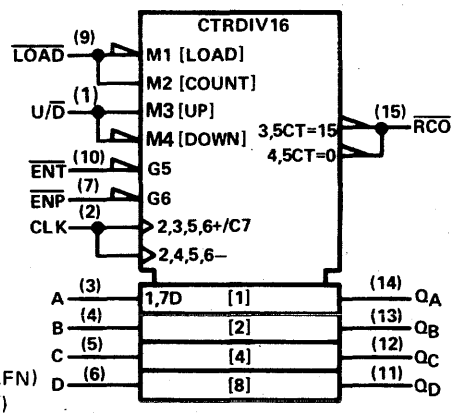

pin assignments

J, N PACKAGES				FH, FN PACKAGES			
1	U/D	9	LOAD	1	nc	11	nc
2	CLK	10	ENT	2	U/D	12	LOAD
3	A	11	Q_D	3	CLK	13	ENT
4	B	12	Q_C	4	A	14	Q_D
5	C	13	Q_B	5	B	15	Q_C
6	D	14	Q_A	6	nc	16	nc
7	ENP	15	RCO	7	C	17	Q_B
8	GND	16	V_{CC}	8	D	18	Q_A
				9	ENP	19	RCO
				10	GND	20	V_{CC}

† Pin numbers shown on logic symbols are for J and N packages only.
nc — no internal connection.

Copyright © 1983 by Texas Instruments Incorporated.

170

4-BY-4 REGISTER FILES

typical performance

TYPE	TYPE OF OUTPUT	ADDRESS TIME	POWER PER BIT
'170	O-C	30 ns	40 mW
'LS170	O-C	27 ns	7.8 mW

SN54170 (J,FH) SN74170 (J,N)
SN54LS170 (J,FH) SN74LS170 (J,N,FN)

logic symbol†

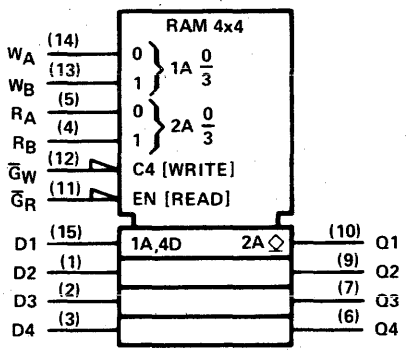

pin assignments

J, N PACKAGES				FH, FN PACKAGES			
1	D2	9	Q2	1	nc	11	nc
2	D3	10	Q1	2	D2	12	Q2
3	D4	11	$\overline{G}_R$	3	D3	13	Q1
4	R_B	12	$\overline{G}_W$	4	D4	14	$\overline{G}_R$
5	R_A	13	W_B	5	R_B	15	$\overline{G}_W$
6	Q4	14	W_A	6	nc	16	nc
7	Q3	15	D1	7	R_A	17	W_B
8	GND	16	V_{CC}	8	Q4	18	W_A
				9	Q3	19	D1
				10	GND	20	V_{CC}

171

QUAD D-TYPE FLIP-FLOPS WITH CLEAR

- Double-Rail Outputs
- Buffered Clock and Clear Inputs
- Individual Data Inputs to Each Flip-Flop

typical performance

TYPE	FREQ	POWER PER F-F	DELAY TIMES	
			SETUP	HOLD
'LS171	30 MHz	17.5 mW	20 ns†	5 ns†

† Rising edge of clock pulse

SN54LS171 (J,FH) SN74LS171 (J,N,FN)

logic symbol†

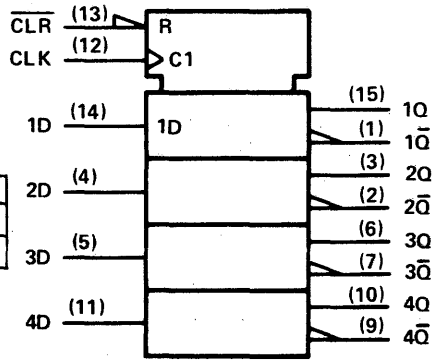

pin assignments

J, N PACKAGES				FH, FN PACKAGES			
1	$1\overline{Q}$	9	$4\overline{Q}$	1	nc	11	nc
2	$2\overline{Q}$	10	4Q	2	$1\overline{Q}$	12	$4\overline{Q}$
3	2Q	11	4D	3	$2\overline{Q}$	13	4Q
4	2D	12	CLK	4	2Q	14	4D
5	3D	13	$\overline{CLR}$	5	2D	15	CLK
6	3Q	14	1D	6	nc	16	nc
7	$3\overline{Q}$	15	1Q	7	3D	17	$\overline{CLR}$
8	GND	16	V_{CC}	8	3Q	18	1D
				9	$3\overline{Q}$	19	1Q
				10	GND	20	V_{CC}

For chip carrier information, contact the factory.

† Pin numbers shown on logic symbols are for J and N packages only.
nc — no internal connection.

Copyright © 1983 by Texas Instruments Incorporated.

TEXAS INSTRUMENTS
POST OFFICE BOX 225012 • DALLAS, TEXAS 75265

172

16-BIT REGISTER FILES

typical performance

TYPE	ORG	TYPE OF OUTPUT	ADDRESS TIME	POWER PER BIT
'172	8X2	3-State	33 ns	35 mW

SN74172 (J,N)

logic symbol†

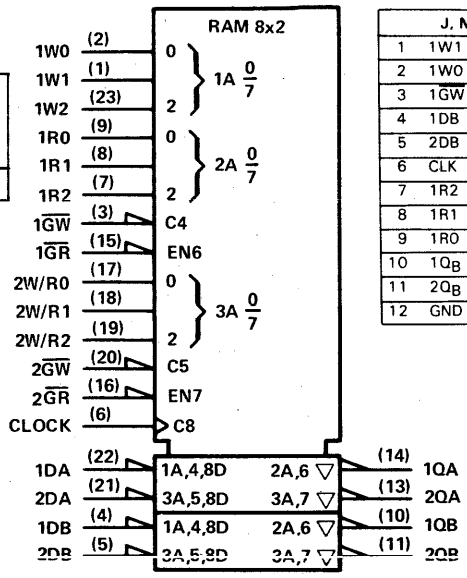

pin assignments

J, N PACKAGES			
1	1W1	13	$2Q_A$
2	1W0	14	$1Q_A$
3	$1\overline{GW}$	15	$1\overline{GR}$
4	1DB	16	$2\overline{GR}$
5	2DB	17	2W/R0
6	CLK	18	2W/R1
7	1R2	19	2W/R2
8	1R1	20	$2\overline{GW}$
9	1R0	21	2DA
10	$1Q_B$	22	1DA
11	$2Q_B$	23	1W2
12	GND	24	V_{CC}

173

4-BIT D-TYPE REGISTERS

(3-state outputs)

typical performance

TYPE	FREQ	ASYNC CLEAR	TOTAL POWER
'173	25 MHz	HIGH	250 mW
'LS173A	50 MHz	HIGH	85 mW

SN54173 (J,FH) SN74173 (J,N)
SN54LS173A (J,FH) SN74LS173A (J,N,FN)

logic symbol, '173†

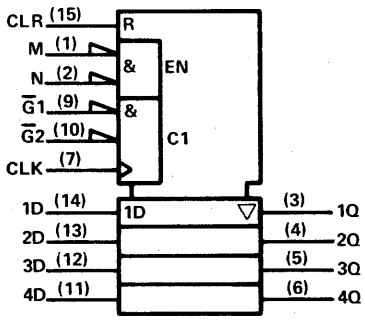

logic symbol, 'LS173A†

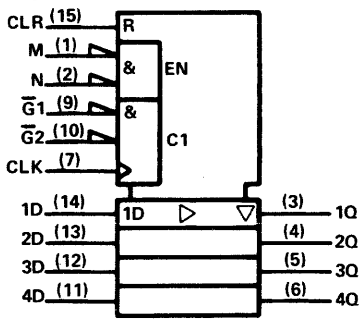

pin assignments

J, N PACKAGES				FH, FN PACKAGES			
1	M	9	$\overline{G1}$	1	nc	11	nc
2	N	10	$\overline{G2}$	2	M	12	$\overline{G1}$
3	1Q	11	4D	3	N	13	$\overline{G2}$
4	2Q	12	3D	4	1Q	14	4D
5	3Q	13	2D	5	2Q	15	3D
6	4Q	14	1D	6	nc	16	nc
7	CLK	15	CLR	7	3Q	17	2D
8	GND	16	V_{CC}	8	4Q	18	1D
				9	CLK	19	CLR
				10	GND	20	V_{CC}

† Pin numbers shown on logic symbols are for J and N packages only.
nc — no internal connection.

Copyright © 1983 by Texas Instruments Incorporated

174

HEX D-TYPE FLIP-FLOPS
(single-rail outputs, common direct clear)
typical performance

TYPE	FREQ	POWER PER F-F	DELAY TIMES SETUP	DELAY TIMES HOLD
'174	35 MHz	38 mW	20 nst	5 nst
'ALS174	80 MHz	6.7 mW	15 nst	0 nst
'AS174	175 MHz	38 mW		
'LS174	40 MHz	10.6 mW	20 nst	5 nst
'S174	110 MHz	75 mW	5 nst	3 nst

† Rising edge of clock pulse

SN54174 (J,FH) SN74174 (J,N)
SN54ALS174 (J,FH) SN74ALS174 (N,FN)
SN54AS174 (J,FH) SN74AS174 (N,FN)
SN54LS174 (J,FH) SN74LS174 (J,N,FN)
SN54S174 (J,FH) SN74S174 (J,N,FN)

logic symbol†

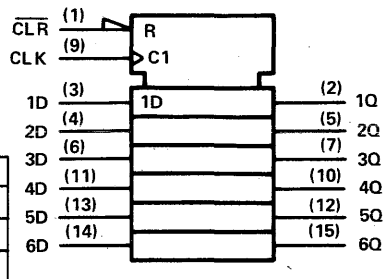

pin assignments

J, N PACKAGES				FH, FN PACKAGES			
1	$\overline{CLR}$	9	CLK	1	nc	11	nc
2	1Q	10	4Q	2	$\overline{CLR}$	12	CLK
3	1D	11	4D	3	1Q	13	4Q
4	2D	12	5Q	4	1D	14	4D
5	2Q	13	5D	5	2D	15	5Q
6	3D	14	6D	6	nc	16	nc
7	3Q	15	6Q	7	2Q	17	5D
8	GND	16	V_{CC}	8	3D	18	6D
				9	3Q	19	6Q
				10	GND	20	V_{CC}

175

QUAD D-TYPE FLIP-FLOPS
(complementary outputs, common direct clear)
typical performance

TYPE	FREQ	POWER PER F-F	DELAY TIMES SETUP	DELAY TIMES HOLD
'175	35 MHz	38 mW	20 nst	5 nst
'ALS175	80 MHz	7.5 mW	15 nst	0 nst
'AS175	175 MHz	41 mW		
'LS175	40 MHz	10.6 mW	20 nst	5 nst
'S175	110 MHz	75 mW	5 nst	3 nst

† Rising edge of clock pulse

SN54175 (J,FH) SN74175 (J,N)
SN54ALS175 (J,FH, SN74ALS175 (N,FN)
SN54AS175 (J,FH) SN74AS175 (N,FN)
SN54LS175 (J,FH) SN74LS175 (J,N,FN)
SN54S175 (J,FH) SN74S175 (J,N,FN)

logic symbol†

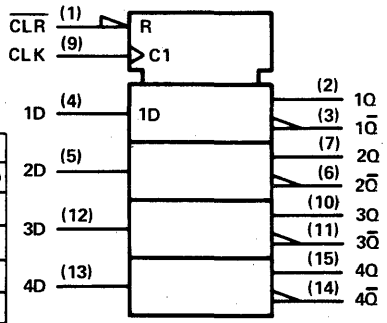

pin assignments

J, N PACKAGES				FH, FN PACKAGES			
1	$\overline{CLR}$	9	CLK	1	nc	11	nc
2	1Q	10	3Q	2	$\overline{CLR}$	12	CLK
3	1Q̄	11	3Q̄	3	1Q	13	3Q
4	1D	12	3D	4	1Q̄	14	3Q̄
5	2D	13	4D	5	1D	15	3D
6	2Q̄	14	4Q̄	6	nc	16	nc
7	2Q	15	4Q	7	2D	17	4D
8	GND	16	V_{CC}	8	2Q̄	18	4Q̄
				9	2Q	19	4Q
				10	GND	20	V_{CC}

† Pin numbers shown on logic symbols are for J and N packages only.
nc — no internal connection.

Copyright © 1983 by Texas Instruments Incorporated.

176

PRESETTABLE DECADE/ BIQUINARY COUNTERS

typical performance

TYPE	COUNT FREQ	CLEAR	TOTAL POWER
'176	35 MHz	LOW	150 mW

SN54176 (J,FH) SN74176 (J,N)

logic symbol, '176†

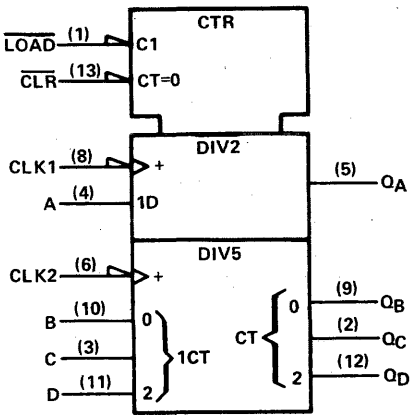

pin assignments

J, N PACKAGES				FH PACKAGE			
1	$\overline{LOAD}$	8	CLK1	1	nc	11	nc
2	Q_C	9	Q_B	2	$\overline{LOAD}$	12	CLK1
3	C	10	B	3	Q_C	13	Q_B
4	A	11	D	4	C	14	B
5	Q_A	12	Q_D	5	nc	15	nc
6	CLK2	13	$\overline{CLR}$	6	A	16	D
7	GND	14	V_{CC}	7	nc	17	nc
				8	Q_A	18	Q_D
				9	CLK2	19	$\overline{CLR}$
				10	GND	20	V_{CC}

177

PRESETTABLE BINARY COUNTERS

typical performance

TYPE	COUNT FREQ	CLEAR	TOTAL POWER
'177	35 MHz	LOW	150 mW

SN54177 (J,FH) SN74177 (J,N)

logic symbol, '177†

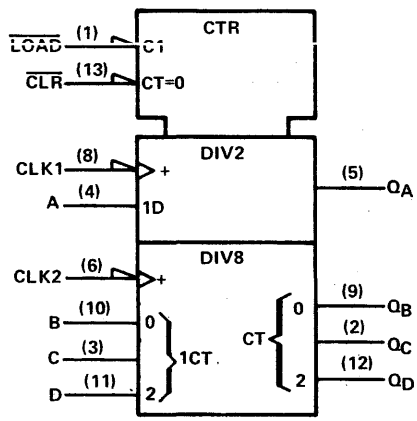

pin assignments

J, N PACKAGES				FH PACKAGE			
1	$\overline{LOAD}$	8	CLK1	1	nc	11	nc
2	Q_C	9	Q_B	2	$\overline{LOAD}$	12	CLK1
3	C	10	B	3	Q_C	13	Q_B
4	A	11	D	4	C	14	B
5	Q_A	12	Q_D	5	nc	15	nc
6	CLK2	13	$\overline{CLR}$	6	A	16	D
7	GND	14	V_{CC}	7	nc	17	nc
				8	Q_A	18	Q_D
				9	CLK2	19	$\overline{CLR}$
				10	GND	20	V_{CC}

178

4-BIT UNIVERSAL SHIFT REGISTER

typical performance

TYPE	SHIFT FREQ	SERIAL DATA INPUT	ASYNC CLEAR	TOTAL POWER
'178	25 MHz	D	NONE	230 mW

SN54178 (J,FH) SN74178 (J,N)

logic symbol†

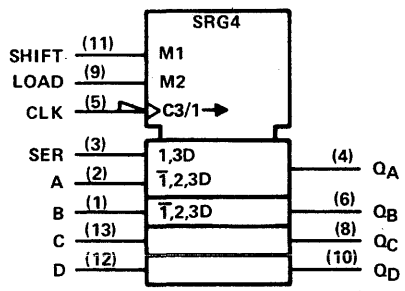

pin assignments

J, N PACKAGES				FH PACKAGE			
1	B	8	Q_C	1	nc	11	nc
2	A	9	LOAD	2	B	12	Q_C
3	SER	10	Q_D	3	A	13	LOAD
4	Q_A	11	SHIFT	4	SER	14	Q_D
5	CLK	12	D	5	nc	15	nc
6	Q_B	13	C	6	Q_A	16	SHIFT
7	GND	14	V_{CC}	7	nc	17	nc
				8	CLK	18	D
				9	Q_B	19	C
				10	GND	20	V_{CC}

† Pin numbers shown on logic symbols are for J and N packages only.
nc — no internal connection.

Copyright © 1983 by Texas Instruments Incorporated.

TEXAS INSTRUMENTS
POST OFFICE BOX 225012 • DALLAS, TEXAS 75265

© IC MASTER 1984

179

4-BIT UNIVERSAL SHIFT REGISTERS
(direct clear; Q_D complementary outputs)
typical performance

TYPE	SHIFT FREQ	SERIAL DATA INPUT	ASYNC CLEAR	TOTAL POWER
'179	25 MHz	D	LOW	230 mW

SN54179 (J,FH) SN74179 (J,N)

logic symbol†

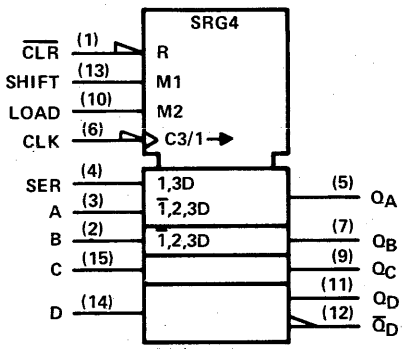

pin assignments

J, N PACKAGES				FH PACKAGE			
1	CLR	9	Q_C	1	nc	11	nc
2	B	10	LOAD	2	CLR	12	Q_C
3	A	11	Q_D	3	B	13	LOAD
4	SER	12	$\overline{Q}_D$	4	A	14	Q_D
5	Q_A	13	SHIFT	5	SER	15	$\overline{Q}_D$
6	CLK	14	D	6	nc	16	nc
7	Q_B	15	C	7	Q_A	17	SHIFT
8	GND	16	V_{CC}	8	CLK	18	D
				9	Q_B	19	C
				10	GND	20	V_{CC}

180

9-BIT ODD/EVEN PARITY GENERATORS/CHECKERS
typical performance

TYPE	POWER	DELAY
'180	170 mW	35 ns

SN54180 (J,FH) SN74180 (J,N)

logic symbol†

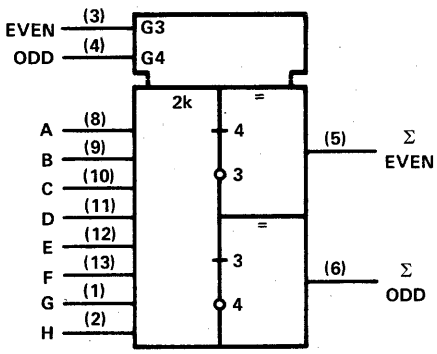

pin assignments

J, N PACKAGES				FH PACKAGE			
1	G	8	A	1	nc	11	nc
2	H	9	B	2	G	12	A
3	EVEN	10	C	3	H	13	B
4	ODD	11	D	4	EVEN	14	C
5	ΣEVEN	12	E	5	nc	15	nc
6	ΣODD	13	F	6	ODD	16	D
7	GND	14	V_{CC}	7	nc	17	nc
				8	ΣEVEN	18	E
				9	ΣODD	19	F
				10	GND	20	V_{CC}

181

ARITHMETIC LOGIC UNITS/ FUNCTION GENERATORS
(16 arithmetic operations, 16 logic functions)
typical performance

TYPE	CARRY TIME	ADD TIME	TOTAL POWER
'181	12.5 ns	24 ns	455 mW
'AS181A	6 ns	5 ns	675 mW
'LS181	16 ns	24 ns	102 mW
'S181	7 ns	11 ns	600 mW

SN54181 (J,FH) SN74181 (J,N)
SN54AS181A (J,FH) SN74AS181A (N,FN)
SN54LS181 (J,FH) SN74LS181 (J,N,FN)
SN54S181 (J,FH) SN74S181 (J,N,FN)

logic symbol†

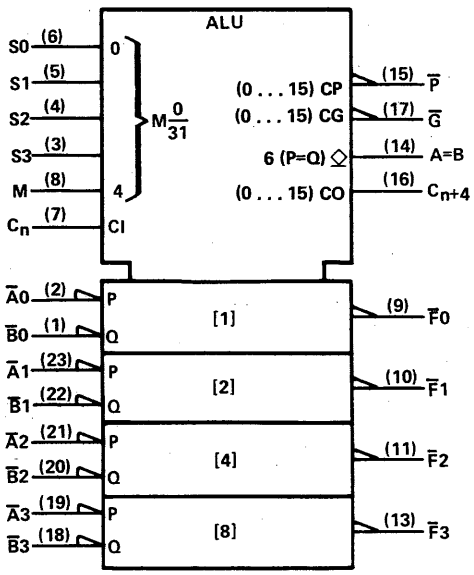

pin assignments

J, N PACKAGES				FH, FN PACKAGES			
1	B0	13	F3	1	nc	15	nc
2	A0	14	A=B	2	B0	16	F3
3	S3	15	P	3	A0	17	A=B
4	S2	16	C_{n+4}	4	S3	18	P
5	S1	17	G	5	S2	19	C_{n+4}
6	S0	18	B3	6	S1	20	G
7	C_n	19	A3	7	S0	21	B3
8	M	20	B2	8	nc	22	nc
9	F0	21	A2	9	C_n	23	A3
10	F1	22	B1	10	M	24	B2
11	F2	23	A1	11	F0	25	A2
12	GND	24	V_{CC}	12	F1	26	B1
				13	F2	27	A1
				14	GND	28	V_{CC}

† Pin numbers shown on logic symbols are for J and N packages only.
nc — no internal connection.

Copyright © 1983 by Texas Instruments Incorporated.

TEXAS INSTRUMENTS
POST OFFICE BOX 225012 • DALLAS, TEXAS 75265

182

LOOK-AHEAD CARRY GENERATORS

typical performance

TYPE	POWER	CARRY TIME
'182	180 mW	13 ns
'AS182	100 mW	5 ns
'S182	260 mW	7 ns

SN54182 (J,FH) SN74182 (J,N)
SN54AS182 (J,FH) SN74AS182 (N,FN)
SN54S182 (J,FH) SN74S182 (J,N,FN)

logic symbols†

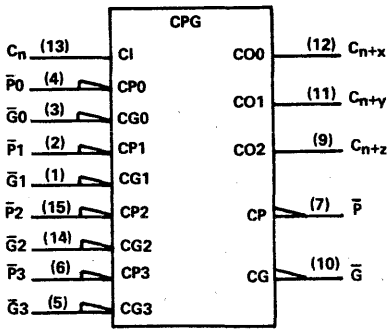

OR

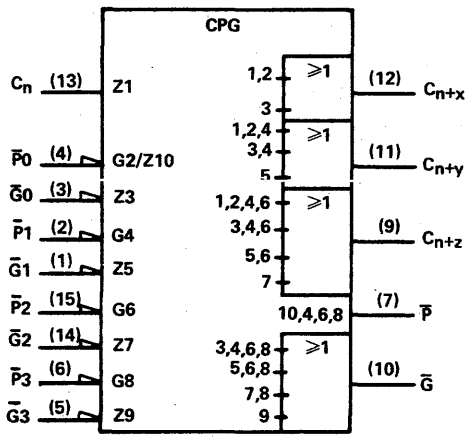

pin assignments

J, N PACKAGES			
1	Ḡ1	9	Cn+z
2	P̄1	10	Ḡ
3	Ḡ0	11	Cn+y
4	P̄0	12	Cn+x
5	Ḡ3	13	Cn
6	P̄3	14	Ḡ2
7	P̄	15	P̄2
8	GND	16	VCC

FH, FN PACKAGES			
1	nc	11	nc
2	Ḡ1	12	Cn+z
3	P̄1	13	Ḡ
4	Ḡ0	14	Cn+y
5	P̄0	15	Cn+x
6	nc	16	nc
7	Ḡ3	17	Cn
8	P̄3	18	Ḡ2
9	P̄	19	P̄2
10	GND	20	VCC

183

DUAL CARRY-SAVE FULL ADDERS

typical performance

TYPE	CARRY TIME	ADD TIME	POWER PER BIT
'H183	11 ns	11 ns	110 mW
'LS183	15 ns	15 ns	23 mW

SN54H183 (J,FH) SN74H183 (J,N)
SN54LS183 (J,FH) SN74LS183 (J,N,FN)

logic symbol†

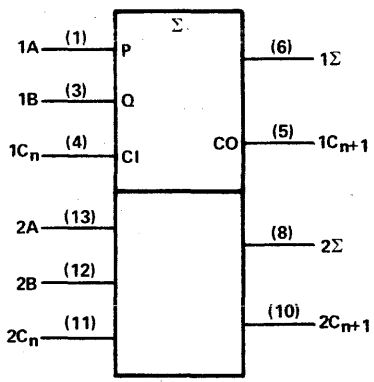

pin assignments

J, N PACKAGES			
1	1A	8	2Σ
2	nc	9	nc
3	1B	10	2Cn+1
4	1Cn	11	2Cn
5	1Cn+1	12	2B
6	1Σ	13	2A
7	GND	14	VCC

FH, FN PACKAGES			
1	nc	11	nc
2	1A	12	2Σ
3	nc	13	nc
4	1B	14	2Cn+1
5	nc	15	nc
6	1Cn	16	2Cn
7	nc	17	nc
8	1Cn+1	18	2B
9	1Σ	19	2A
10	GND	20	VCC

† Pin numbers shown on logic symbols are for J and N packages only.
nc — no internal connection.

Copyright © 1983 by Texas Instruments Incorporated.

184

CODE CONVERTERS

(BCD to binary)

typical performance

TYPE	POWER	DELAY
'184	280 mW	25 ns

SN54184 (J,FH) SN74184 (J,N)

logic symbols†

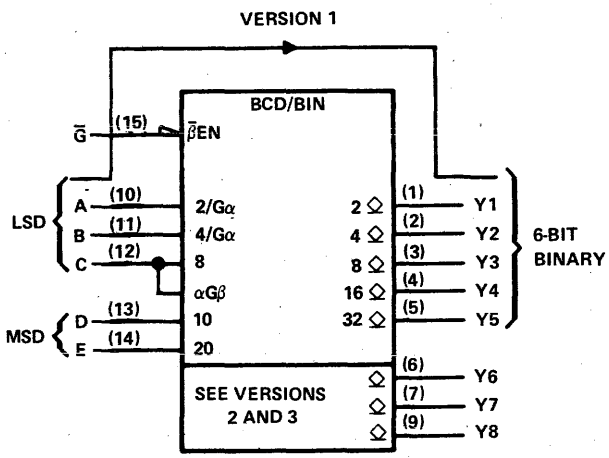

pin assignments

J, N PACKAGES				FH PACKAGE			
1	Y1	9	Y8	1	nc	11	nc
2	Y2	10	A	2	Y1	12	Y8
3	Y3	11	B	3	Y2	13	A
4	Y4	12	C	4	Y3	14	B
5	Y5	13	D	5	Y4	15	C
6	Y6	14	E	6	nc	16	nc
7	Y7	15	G̅	7	Y5	17	D
8	GND	16	V_{CC}	8	Y6	18	E
				9	Y7	19	G̅
				10	GND	20	V_{CC}

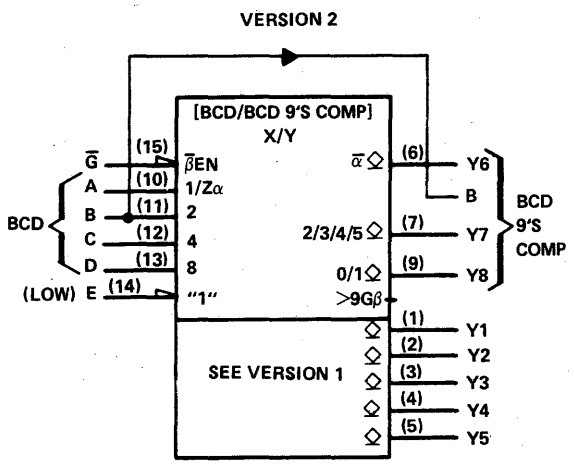

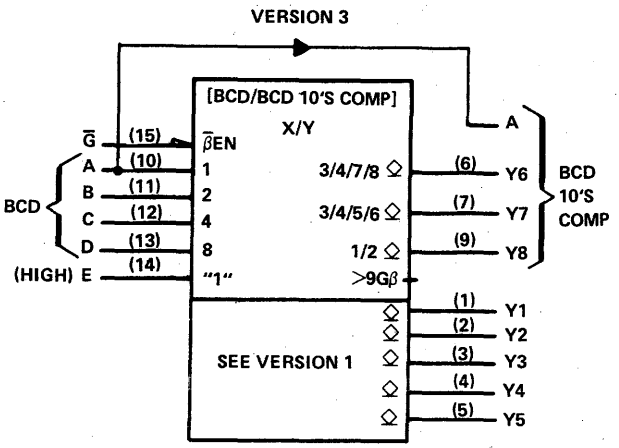

† Pin numbers shown on logic symbols are for J and N packages only.

nc — no internal connection.

Copyright © 1983 by Texas Instruments Incorporated.

185

CODE CONVERTERS

(binary to BCD)

typical performance

TYPE	POWER	DELAY
'185A	280 mW	25 ns

SN54185A (J,FH) SN74185A (J,N)

logic symbol†

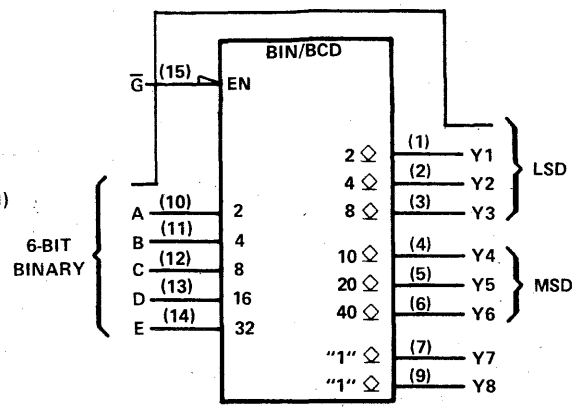

pin assignments

J, N PACKAGES				FH PACKAGE			
1	Y1	9	Y8	1	nc	11	nc
2	Y2	10	A	2	Y1	12	Y8
3	Y3	11	B	3	Y2	13	A
4	Y4	12	C	4	Y3	14	B
5	Y5	13	D	5	Y4	15	C
6	Y6	14	E	6	nc	16	nc
7	Y7	15	$\overline{G}$	7	Y5	17	D
8	GND	16	V_{CC}	8	Y6	18	E
				9	Y7	19	$\overline{G}$
				10	GND	20	V_{CC}

187

1024-BIT READ-ONLY MEMORIES

(256 4-bit words; open-collector outputs)

typical performance

TYPE	ACCESS TIMES	
	CHIP-SELECT	ADDRESS
'187	20 ns	40 ns

SN54187 (J,FH) SN74187 (J,N)

logic symbol†

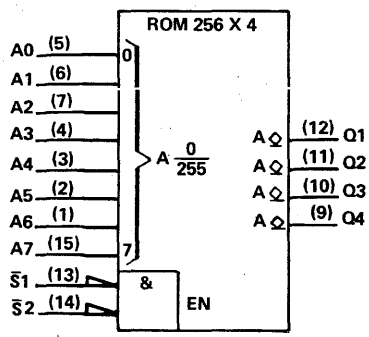

pin assignments

J, N PACKAGES				FH PACKAGE			
1	A6	9	Q4	1	nc	11	nc
2	A5	10	Q3	2	A6	12	Q4
3	A4	11	Q2	3	A5	13	Q3
4	A3	12	Q1	4	A4	14	Q2
5	A0	13	$\overline{S}1$	5	A3	15	Q1
6	A1	14	$\overline{S}2$	6	nc	16	nc
7	A2	15	A7	7	A0	17	$\overline{S}1$
8	GND	16	V_{CC}	8	A1	18	$\overline{S}2$
				9	A2	19	A7
				10	GND	20	V_{CC}

188

256-BIT PROGRAMMABLE READ-ONLY MEMORIES

(This number has been changed to TBP18SA030. Product Guide information for this TTL circuit can be found at the end of this section.)

189

64-BIT RANDOM-ACCESS MEMORIES

(16 4-bit words; three-state outputs)

typical performance

TYPE	ADDRESS TIME	ENABLE TIME	POWER PER BIT
'LS189A	50 ns	35 ns	2.7 mW
'S189A	25 ns	12 ns	5.9 mW

SN54LS189A (J,FH) SN74LS189A (J,N,FN)
SN54S189A (J,FH) SN74S189A (J,N,FN)

logic symbol†

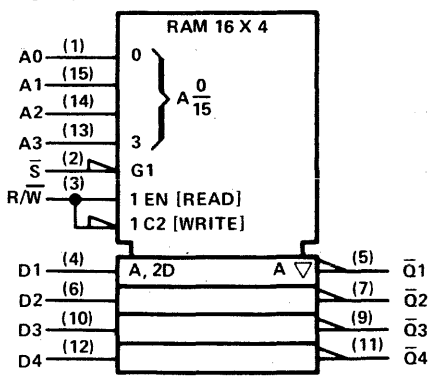

pin assignments

J, N PACKAGES				FH, FN PACKAGES			
1	A0	9	$\overline{Q}3$	1	nc	11	nc
2	$\overline{S}$	10	D3	2	A0	12	$\overline{Q}3$
3	R/$\overline{W}$	11	$\overline{Q}4$	3	$\overline{S}$	13	D3
4	D1	12	D4	4	R/$\overline{W}$	14	$\overline{Q}4$
5	$\overline{Q}1$	13	A3	5	D1	15	D4
6	D2	14	A2	6	nc	16	nc
7	$\overline{Q}2$	15	A1	7	$\overline{Q}1$	17	A3
8	GND	16	V_{CC}	8	D2	18	A2
				9	$\overline{Q}2$	19	A1
				10	GND	20	V_{CC}

† Pin numbers shown on logic symbols are for J and N packages only.
nc — no internal connection.

Copyright © 1983 by Texas Instruments Incorporated.

TEXAS INSTRUMENTS
POST OFFICE BOX 225012 • DALLAS, TEXAS 75265

© IC MASTER 1984

190

SYNCHRONOUS UP/DOWN COUNTERS (BCD)

typical performance

TYPE	COUNT FREQ	TOTAL POWER
'190	20 MHz	325 mW
'ALS190	35 MHz	60 mW
'LS190	20 MHz	100 mW

SN54190 (J,FH) SN74190 (J,N)
SN54ALS190 (J,FH) SN74ALS190 (N,FN)
SN54LS190 (J,FH) SN74LS190 (J,N,FN)

logic symbol,'190, 'LS190†

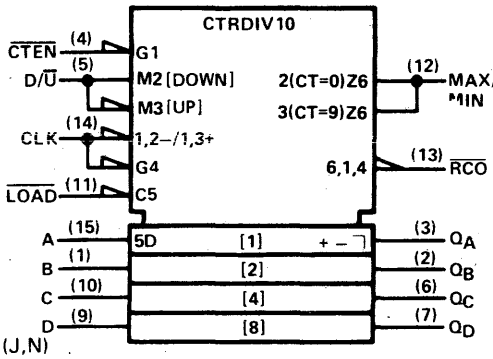

pin assignments

J, N PACKAGES				FH, FN PACKAGES			
1	B	9	D	1	nc	11	nc
2	Q_B	10	C	2	B	12	D
3	Q_A	11	$\overline{LOAD}$	3	Q_B	13	C
4	$\overline{CTEN}$	12	MAX/MIN	4	Q_A	14	$\overline{LOAD}$
5	$D/\overline{U}$	13	$\overline{RCO}$	5	$\overline{CTEN}$	15	MAX/MIN
6	Q_C	14	CLK	6	nc	16	nc
7	Q_D	15	A	7	$D/\overline{U}$	17	$\overline{RCO}$
8	GND	16	V_{CC}	8	Q_C	18	CLK
				9	Q_D	19	A
				10	GND	20	V_{CC}

logic symbol, 'ALS190†

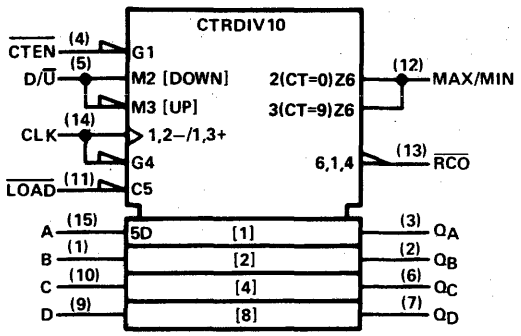

191

SYNCHRONOUS UP/DOWN COUNTERS (binary)

logic symbol,'191, 'LS191†

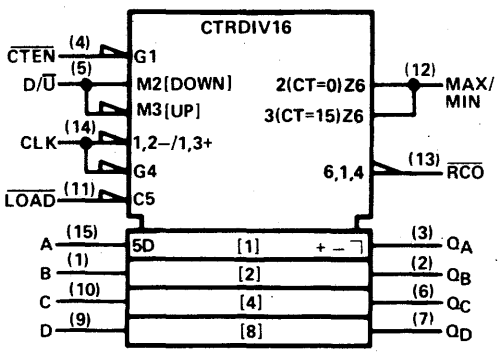

pin assignments

J, N PACKAGES				FH, FN PACKAGES			
1	B	9	D	1	nc	11	nc
2	Q_B	10	C	2	B	12	D
3	Q_A	11	$\overline{LOAD}$	3	Q_B	13	C
4	$\overline{CTEN}$	12	MAX/MIN	4	Q_A	14	$\overline{LOAD}$
5	$D/\overline{U}$	13	$\overline{RCO}$	5	$\overline{CTEN}$	15	MAX/MIN
6	Q_C	14	CLK	6	nc	16	nc
7	Q_D	15	A	7	$D/\overline{U}$	17	$\overline{RCO}$
8	GND	16	V_{CC}	8	Q_C	18	CLK
				9	Q_D	19	A
				10	GND	20	V_{CC}

typical performance

TYPE	COUNT FREQ	TOTAL POWER
'191	20 MHz	325 mW
'ALS191	35 MHz	60 mW
'LS191	20 MHz	90 mW

SN54191 (J,FH) SN74191 (J,N)
SN54ALS191 (J,FH) SN74ALS191 (N,FN)
SN54LS191 (J,FH) SN74LS191 (J,N,FN)

logic symbol, 'ALS191†

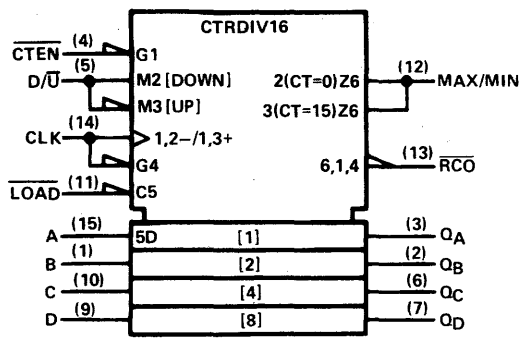

† Pin numbers shown on logic symbols are for J and N packages only.
nc — no internal connection.

See ALS/AS availability at front of this Product Guide.

Copyright © 1983 by Texas Instruments Incorporated.

TEXAS INSTRUMENTS
POST OFFICE BOX 225012 • DALLAS, TEXAS 75265

192

SYNCHRONOUS UP/DOWN DUAL CLOCK COUNTERS (BCD with clear)

typical performance

TYPE	COUNT FREQ	TOTAL POWER
'192	25 MHz	325 mW
'ALS192	40 MHz	50 mW
'L192	3 MHz	42 mW
'LS192	25 MHz	85 mW

SN54192 (J,FH) SN74192 (J,N)
SN54L192 (J)
SN54LS192 (J,FH) SN74LS192 (J,N,FN)
SN54ALS192 (J,FH) SN74ALS192 (N,FN)

logic symbol†

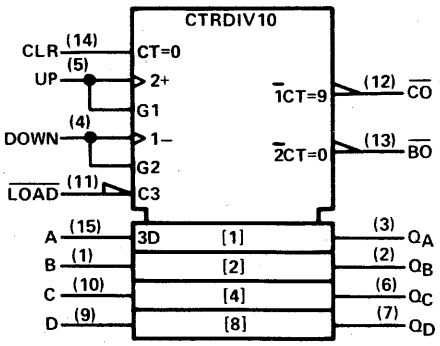

pin assignments

J, N PACKAGES				FH, FN PACKAGES			
1	B	9	D	1	nc	11	nc
2	Q_B	10	C	2	B	12	D
3	Q_A	11	$\overline{LOAD}$	3	Q_B	13	C
4	DOWN	12	CO	4	Q_A	14	$\overline{LOAD}$
5	UP	13	$\overline{BO}$	5	DOWN	15	CO
6	Q_C	14	CLR	6	nc	16	nc
7	Q_D	15	A	7	UP	17	$\overline{BO}$
8	GND	16	V_{CC}	8	Q_C	18	CLR
				9	Q_D	19	A
				10	GND	20	V_{CC}

193

SYNCHRONOUS UP/DOWN DUAL CLOCK COUNTERS (binary with clear)

typical performance

TYPE	COUNT FREQ	TOTAL POWER
'193	25 MHz	325 mW
'ALS193	40 MHz	50 mW
'L193	3 MHz	42 mW
'LS193	25 MHz	85 mW

SN54193 (J,FH) SN74193 (J,N)
SN54L193 (J)
SN54LS193 (J,FH) SN74LS193 (J,N,FN)
SN54ALS193 (J,FH) SN74ALS193 (N,FN)

logic symbol†

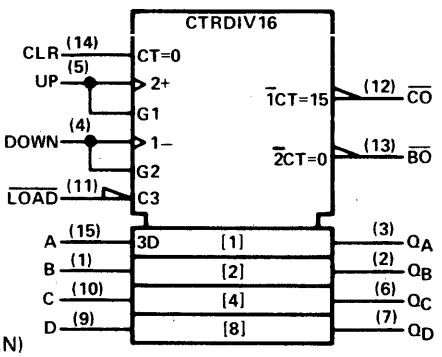

pin assignments

J, N PACKAGES				FH, FN PACKAGES			
1	B	9	D	1	nc	11	nc
2	Q_B	10	C	2	B	12	D
3	Q_A	11	$\overline{LOAD}$	3	Q_B	13	C
4	DOWN	12	$\overline{CO}$	4	Q_A	14	$\overline{LOAD}$
5	UP	13	$\overline{BO}$	5	DOWN	15	$\overline{CO}$
6	Q_C	14	CLR	6	nc	16	nc
7	Q_D	15	A	7	UP	17	$\overline{BO}$
8	GND	16	V_{CC}	8	Q_C	18	CLR
				9	Q_D	19	A
				10	GND	20	V_{CC}

194

4-BIT BIDIRECTIONAL UNIVERSAL SHIFT REGISTERS

typical performance

TYPE	SHIFT FREQ	SERIAL DATA INPUT	TOTAL POWER
'194	25 MHz	D	195 mW
'AS194			
'LS194A	25 MHz	D	75 mW
'S194	70 MHz	D	450 mW

SN54194 (J,FH) SN74194 (J,N,FN)
SN54AS194 (J,FH) SN74AS194 (N,FN)
SN54LS194A (J,FH) SN74LS194A (J,N,FN)
SN54S194 (J,FH) SN74S194 (J,N,FN)

logic symbol†

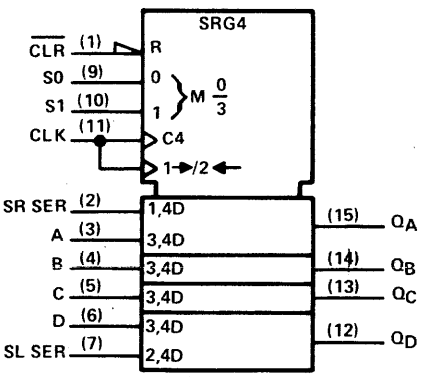

pin assignments

J, N PACKAGES				FH, FN PACKAGES			
1	$\overline{CLR}$	9	S0	1	nc	11	nc
2	SR SER	10	S1	2	$\overline{CLR}$	12	S0
3	A	11	CLK	3	SR SER	13	S1
4	B	12	Q_D	4	A	14	CLK
5	C	13	Q_C	5	B	15	Q_D
6	D	14	Q_B	6	nc	16	nc
7	SL SER	15	Q_A	7	C	17	Q_C
8	GND	16	V_{CC}	8	D	18	Q_B
				9	SL SER	19	Q_A
				10	GND	20	V_{CC}

† Pin numbers shown on logic symbols are for J and N packages only.
nc — no internal connection.

See ALS/AS availability at front of this Product Guide.

Copyright © 1983 by Texas Instruments Incorporated.

TEXAS INSTRUMENTS
POST OFFICE BOX 225012 • DALLAS, TEXAS 75265

© IC MASTER 1984

195

4-BIT PARALLEL-ACCESS SHIFT REGISTERS

typical performance

TYPE	SHIFT FREQ	SERIAL DATA INPUT	TOTAL POWER
'195	30 MHz	J-$\overline{K}$	195 mW
'AS195			
'LS195A	30 MHz	J-$\overline{K}$	70 mW
'S195	70 MHz	J-$\overline{K}$	375 mW

SN54195 (J,FH) SN74195 (J,N)
SN54AS195 (J,FH) SN74AS195 (N,FN)
SN54LS195A (J,FH) SN74LS195A (J,N,FN)
SN54S195 (J,FH) SN74S195 (J,N,FN)

logic symbol, '195†

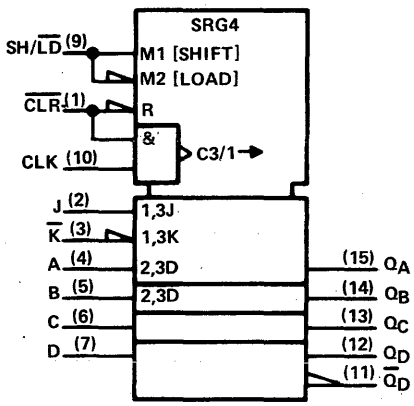

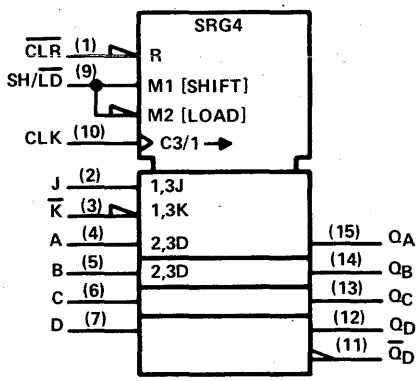

pin assignments

J, N PACKAGES				FH, FN PACKAGES			
1	$\overline{CLR}$	9	SH/$\overline{LD}$	1	nc	11	nc
2	J	10	CLK	2	$\overline{CLR}$	12	SH/$\overline{LD}$
3	$\overline{K}$	11	$\overline{Q}_D$	3	J	13	CLK
4	A	12	Q_D	4	$\overline{K}$	14	$\overline{Q}_D$
5	B	13	Q_C	5	A	15	Q_D
6	C	14	Q_B	6	nc	16	nc
7	D	15	Q_A	7	B	17	Q_C
8	GND	16	V_{CC}	8	C	18	Q_B
				9	D	19	Q_A
				10	GND	20	V_{CC}

196

PRESETTABLE DECADE/ BIQUINARY COUNTERS/ LATCHES

typical performance

TYPE	COUNT FREQ	PARALLEL LOAD	CLEAR	TOTAL POWER
'196	50 MHz	YES	LOW	240 mW
'LS196	30 MHz	YES	LOW	60 mW
'S196	100 MHz	YES	LOW	375 mW

SN54196 (J,FH) SN74196 (J,N)
SN54LS196 (J,FH) SN74LS196 (J,N,FN)
SN54S196 (J,FH) SN74S196 (J,N,FN)

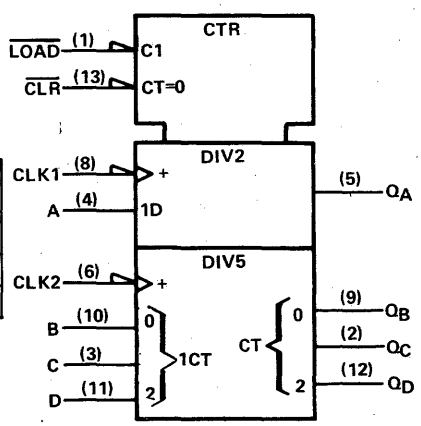

pin assignments

J, N PACKAGES				FH, FN PACKAGES			
1	$\overline{LOAD}$	8	CLK1	1	nc	11	nc
2	Q_C	9	Q_B	2	$\overline{LOAD}$	12	CLK1
3	C	10	B	3	Q_C	13	Q_B
4	A	11	D	4	C	14	B
5	Q_A	12	Q_D	5	nc	15	nc
6	CLK2	13	$\overline{CLR}$	6	A	16	D
7	GND	14	V_{CC}	7	nc	17	nc
				8	Q_A	18	Q_D
				9	CLK2	19	$\overline{CLR}$
				10	GND	20	V_{CC}

† Pin numbers shown on logic symbols are for J and N packages only.
nc — no internal connection.

Copyright © 1983 by Texas Instruments Incorporated.

TEXAS INSTRUMENTS
POST OFFICE BOX 225012 • DALLAS, TEXAS 75265

197

PRESETTABLE BINARY COUNTERS/LATCHES

typical performance

TYPE	COUNT FREQ	PARALLEL LOAD	CLEAR	TOTAL POWER
'197	50 MHz	YES	LOW	240 mW
'LS197	30 MHz	YES	LOW	60 mW
'S197	100 MHz	YES	LOW	375 mW

SN54197 (J,FH) SN74197 (J,N)
SN54LS197 (J,FH) SN74LS197 (J,N,FN)
SN54S197 (J,FH) SN74S197 (J,N,FN)

logic symbol†

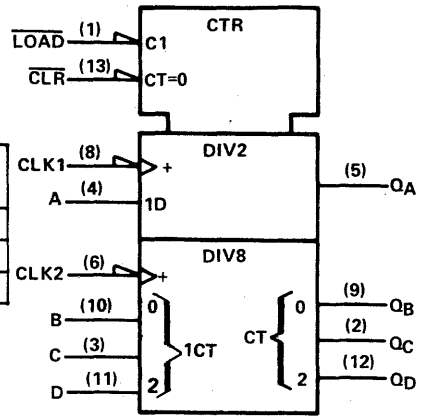

pin assignments

J, N PACKAGES				FH, FN PACKAGES			
1	$\overline{LOAD}$	8	CLK1	1	nc	11	nc
2	Q_C	9	Q_B	2	$\overline{LOAD}$	12	CLK1
3	C	10	B	3	Q_C	13	Q_B
4	A	11	D	4	C	14	B
5	Q_A	12	Q_D	5	nc	15	nc
6	CLK2	13	$\overline{CLR}$	6	A	16	D
7	GND	14	V_{CC}	7	nc	17	nc
				8	Q_A	18	Q_D
				9	CLK2	19	$\overline{CLR}$
				10	GND	20	V_{CC}

198

8-BIT BIDIRECTIONAL UNIVERSAL SHIFT REGISTERS

typical performance

TYPE	SHIFT FREQ	SERIAL DATA INPUT	ASYNC CLEAR	TOTAL POWER
'198	25 MHz	D	LOW	360 mW

SN54198 (J,FH) SN74198 (J,N)

logic symbol†

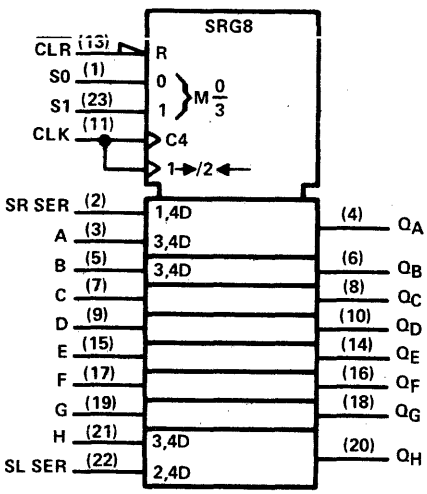

pin assignments

J, N PACKAGES				FH PACKAGE			
1	S0	13	$\overline{CLR}$	1	nc	15	nc
2	SR SER	14	Q_E	2	S0	16	$\overline{CLR}$
3	A	15	E	3	SR SER	17	Q_E
4	Q_A	16	Q_F	4	A	18	E
5	B	17	F	5	Q_A	19	Q_F
6	Q_B	18	Q_G	6	B	20	F
7	C	19	G	7	Q_B	21	Q_G
8	Q_C	20	Q_H	8	nc	22	nc
9	D	21	H	9	C	23	G
10	Q_D	22	SL SER	10	Q_C	24	Q_H
11	CLK	23	S1	11	D	25	H
12	GND	24	V_{CC}	12	Q_D	26	SL SER
				13	CLK	27	S1
				14	GND	28	V_{CC}

† Pin numbers shown on logic symbols are for J and N packages only.
nc — no internal connection.

Copyright © 1983 by Texas Instruments Incorporated.

TEXAS INSTRUMENTS
POST OFFICE BOX 225012 • DALLAS, TEXAS 75265

© IC MASTER 1984

199

8-BIT BIDIRECTIONAL UNIVERSAL SHIFT REGISTERS

(J-$\overline{K}$ serial inputs)

typical performance

TYPE	SHIFT FREQ	SERIAL DATA INPUT	ASYNC CLEAR	TOTAL POWER
'199	25 MHz	J-$\overline{K}$	LOW	360 mW

SN54199 (J,FH) SN74199 (J,N)

logic symbol†

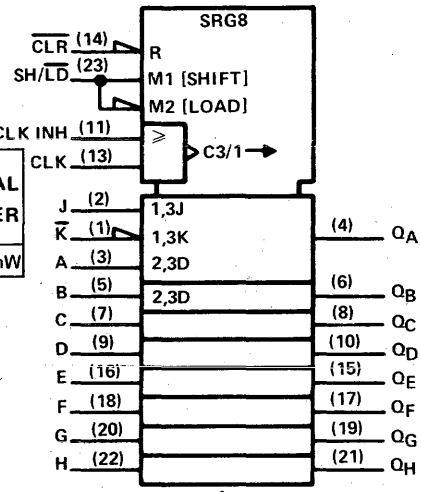

pin assignments

J, N PACKAGES				FH PACKAGE			
1	$\overline{K}$	13	CLK	1	nc	15	nc
2	J	14	$\overline{CLR}$	2	$\overline{K}$	16	CLK
3	A	15	Q_E	3	J	17	$\overline{CLR}$
4	Q_A	16	E	4	A	18	Q_E
5	B	17	Q_F	5	Q_A	19	E
6	Q_B	18	F	6	B	20	Q_F
7	C	19	Q_G	7	Q_B	21	F
8	Q_C	20	G	8	nc	22	nc
9	D	21	Q_H	9	C	23	Q_G
10	Q_D	22	H	10	Q_C	24	G
11	CLK INH	23	SH/$\overline{LD}$	11	D	25	Q_H
12	GND	24	V_{CC}	12	Q_D	26	H
				13	CLK INH	27	SH/$\overline{LD}$
				14	GND	28	V_{CC}

201

256-BIT RANDOM-ACCESS MEMORIES

(256 1-bit words; three-state output)

typical performance

TYPE	ADDRESS TIME	ENABLE TIME	POWER/ BIT
'S201	42 ns	17 ns	1.9 mW

SN74S201 (J,N)

logic symbol†

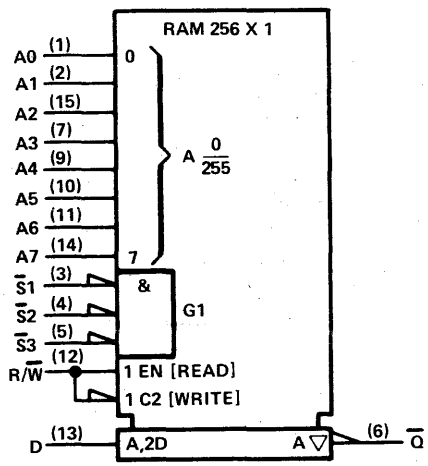

pin assignments

J, N PACKAGES			
1	A0	9	A4
2	A1	10	A5
3	$\overline{S1}$	11	A6
4	$\overline{S2}$	12	R/$\overline{W}$
5	$\overline{S3}$	13	D
6	$\overline{Q}$	14	A7
7	A3	15	A2
8	GND	16	V_{CC}

† Pin numbers shown on logic symbols are for J and N packages only.

nc — no internal connection.

Copyright © 1983 by Texas Instruments Incorporated.

219

64-BIT RANDOM-ACCESS MEMORIES
(16 words of 4 bits each; three-state non-inverting output)

typical performance

TYPE	ADDRESS TIME	ENABLE TIME	POWER/ BIT
'LS219A	50 ns	35 ns	2.7 mW

SN54LS219A (J,FH) SN74LS219A (J,N,FN)

logic symbol†

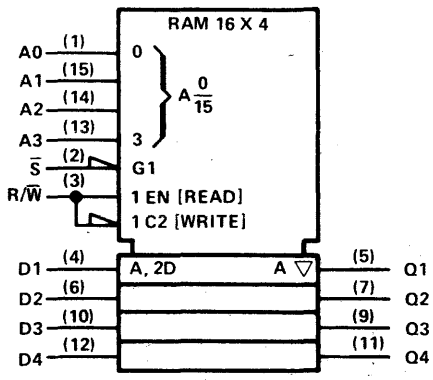

pin assignments

J, N PACKAGES				FH, FN PACKAGES			
1	A0	9	Q3	1	nc	11	nc
2	S̄	10	D3	2	A0	12	Q3
3	R/W̄	11	Q4	3	S̄	13	D3
4	D1	12	D4	4	R/W̄	14	Q4
5	Q1	13	A3	5	D1	15	D4
6	D2	14	A2	6	nc	16	nc
7	Q2	15	A1	7	Q1	17	A3
8	GND	16	V_{CC}	8	D2	18	A2
				9	Q2	19	A1
				10	GND	20	V_{CC}

221

DUAL MONOSTABLE MULTIVIBRATORS

typical performance

TYPE	OUTPUT PULSE RANGE	TOTAL POWER
SN54221	20 ns - 21s	130 mW
SN74221	20 ns - 28s	130 mW
SN54LS221	20 ns - 49s	23 mW
SN74LS221	20 ns - 70 s	23 mW

SN54221 (J,FH) SN74221 (J,N)
SN54LS221 (J,FH) SN74LS221 (J,N,FN)

logic symbol†

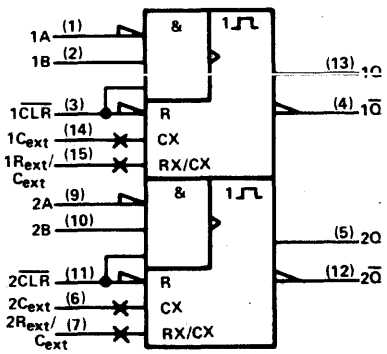

pin assignments

J,N PACKAGES				FH, FN PACKAGES			
1	1A	9	2A	1	nc	11	nc
2	1B	10	2B	2	1A	12	2A
3	1CLR	11	2CLR	3	1B	13	2B
4	1Q̄	12	2Q̄	4	1CLR	14	2CLR
5	2Q	13	1Q	5	1Q̄	15	2Q̄
6	2Cext	14	1Cext	6	nc	16	nc
7	2Rext/Cext	15	1Rext/Cext	7	2Q	17	1Q
8	GND	16	V_{CC}	8	2Cext	18	1Cext
				9	2Rext/Cext	19	1Rext/Cext
				10	GND	20	V_{CC}

† Pin numbers shown on logic symbols are for J and N packages only.
nc — no internal connection.

Copyright © 1983 by Texas Instruments Incorporated.

222

64-BIT FIFO MEMORIES
16 4-BIT WORDS
(input-ready enable, output-ready enable, and three-state output)
typical performance

TYPE	DELAY TIME FROM CLOCK	TOTAL POWER
'LS222	47 ns	433 mW

SN54LS222 (J) SN74LS222 (J,N)

logic symbol†

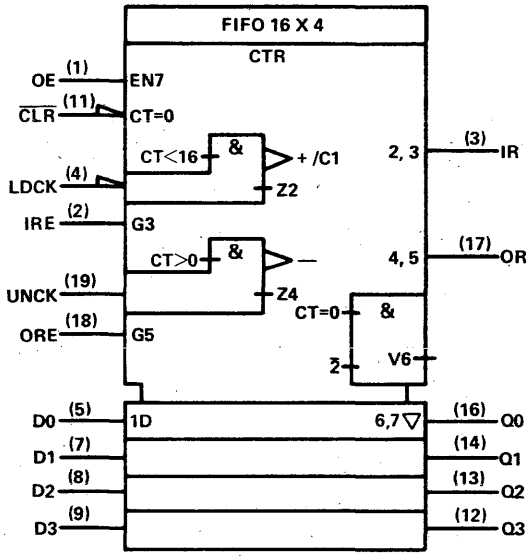

pin assignments

J, N PACKAGES			
1	OE	11	$\overline{CLR}$
2	IRE	12	Q3
3	IR	13	Q2
4	LDCK	14	Q1
5	D0	15	nc
6	nc	16	Q0
7	D1	17	OR
8	D2	18	ORE
9	D3	19	UNCK
10	GND	20	V_{CC}

For chip carrier information, contact the factory.

224

64-BIT FIFO MEMORIES
16 4-BIT WORDS
(three-state output)
typical performance

TYPE	DELAY TIME FROM CLOCK	TOTAL POWER
'LS224	47 ns	433 mW

SN54LS224 (J) SN74LS224 (J,N)

logic symbol†

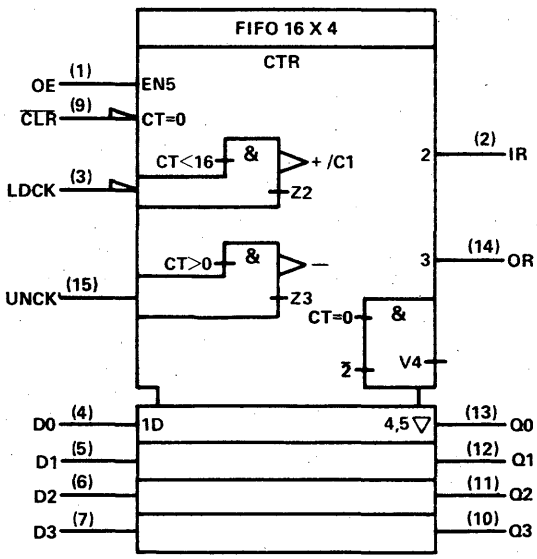

pin assignments

J, N PACKAGES			
1	OE	9	$\overline{CLR}$
2	IR	10	Q3
3	LDCK	11	Q2
4	D0	12	Q1
5	D1	13	Q0
6	D2	14	OR
7	D3	15	UNCK
8	GND	16	V_{CC}

For chip carrier information, contact the factory.

† Pin numbers shown on logic symbols are for J and N packages only.
nc — no internal connection.

Copyright © 1983 by Texas Instruments Incorporated.

225

80-BIT FIFO MEMORIES
16 5-BIT WORDS

typical performance

OUTPUT	DELAY TIME FROM CLOCK	TOTAL POWER
3-State	50 ns	400 mW

SN74S225 (J,N,FN)

logic symbol†

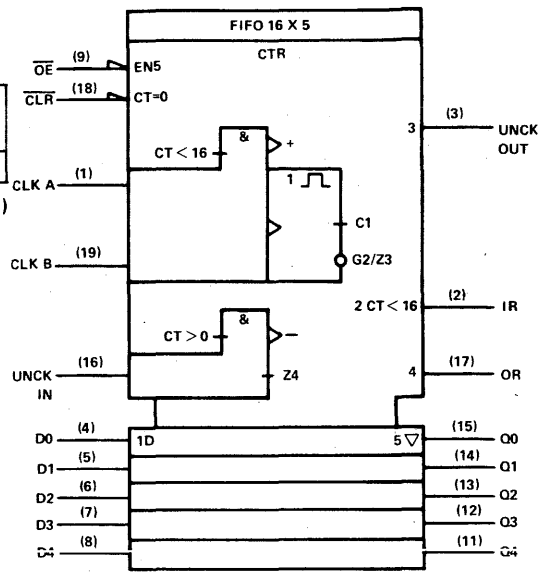

pin assignments

J, N PACKAGES			
1	CLK A	11	Q4
2	IR	12	Q3
3	UNCK OUT	13	Q2
4	D0	14	Q1
5	D1	15	Q0
6	D2	16	UNCK IN
7	D3	17	OR
8	D4	18	$\overline{CLR}$
9	$\overline{OE}$	19	CLK B
10	GND	20	V_{CC}

FN PACKAGES			
1	CLK A	11	Q4
2	IR	12	Q3
3	UNCK OUT	13	Q2
4	D0	14	Q1
5	D1	15	Q0
6	D2	16	UNCK IN
7	D3	17	OR
8	D4	18	$\overline{CLR}$
9	$\overline{OE}$	19	CLK B
10	GND	20	V_{CC}

226

4-BIT PARALLEL LATCHED BUS TRANSCEIVERS
(three-state outputs)

typical performance

TYPE	MAX SOURCE CURRENT	MAX SINK CURRENT
'S226	−6.5 mA	20 mA

SN54S226 (J,FH) SN74S226 (J,N,FN)

logic symbol†

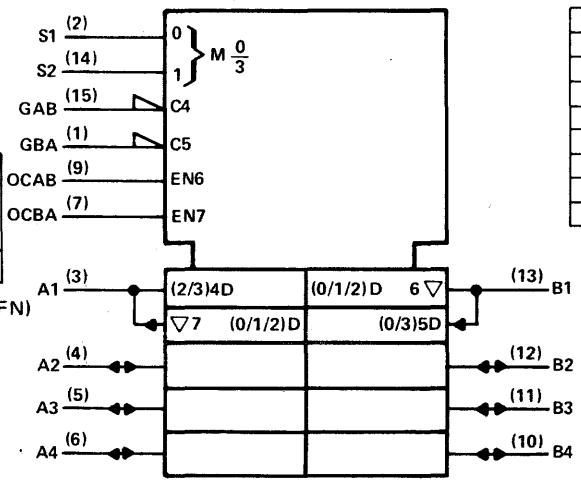

pin assignments

J, N PACKAGES				FH, FN PACKAGES			
1	GBA	9	OCAB	1	nc	11	nc
2	S1	10	B4	2	GBA	12	OCAB
3	A1	11	B3	3	S1	13	B4
4	A2	12	B2	4	A1	14	B3
5	A3	13	B1	5	A2	15	B2
6	A4	14	S2	6	nc	16	nc
7	OCBA	15	GAB	7	A3	17	B1
8	GND	16	V_{CC}	8	A4	18	S2
				9	OCBA	19	GAB
				10	GND	20	V_{CC}

† Pin numbers shown on logic symbols are for J and N packages only.
nc — no internal connection.

Copyright © 1983 by Texas Instruments Incorporated.

TEXAS INSTRUMENTS
POST OFFICE BOX 225012 • DALLAS, TEXAS 75265

© IC MASTER 1984

227

64-BIT FIFO MEMORIES
16 4-BIT WORDS
(input-ready enable, output-ready enable, open-collector outputs)

typical performance

TYPE	DELAY TIME FROM CLOCK	TOTAL POWER
'LS227	57.5 ns	433 mW

SN54LS227 (J) SN74LS227 (J,N)

logic symbol†

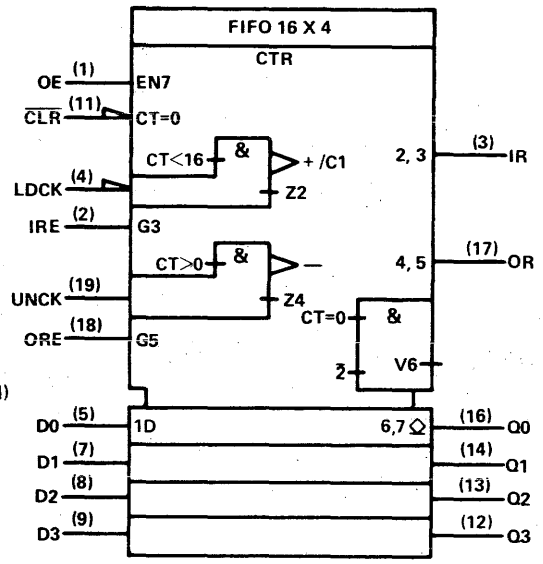

pin assignments

J, N PACKAGES			
1	OE	11	$\overline{CLR}$
2	IRE	12	Q3
3	IR	13	Q2
4	LDCK	14	Q1
5	D0	15	nc
6	nc	16	Q0
7	D1	17	OR
8	D2	18	ORE
9	D3	19	UNCK
10	GND	20	V_{CC}

For chip carrier information, contact the factory.

228

64-BIT FIFO MEMORIES
16 4-BIT WORDS
(open-collector outputs)

typical performance

TYPE	DELAY TIME FROM CLOCK	TOTAL POWER
'LS228	57.5 ns	433 mW

SN54LS228 (J) SN74LS228 (J,N)

logic symbol†

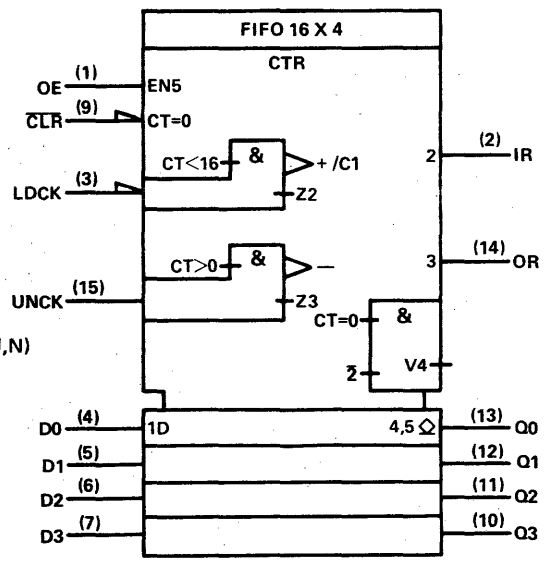

pin assignments

J, N PACKAGES			
1	OE	9	$\overline{CLR}$
2	IR	10	Q3
3	LDCK	11	Q2
4	D0	12	Q1
5	D1	13	Q0
6	D2	14	OR
7	D3	15	UNCK
8	GND	16	V_{CC}

For chip carrier information, contact the factory.

† Pin numbers shown on logic symbols are for J and N packages only.
nc — no internal connection.

Copyright © 1983 by Texas Instruments Incorporated.

230,231

OCTAL BUFFERS AND LINE DRIVERS

(three-state outputs)

- 'AS230 has true and complementary outputs
- 'AS231 has complementary G and $\overline{G}$ inputs

typical performance

DELAY	MAX SOURCE CURRENT	MAX SINK CURRENT
3.5 ns	−15 mA	64 mA

SN54AS230 (J,FH) SN74AS230 (N,FN)
SN54AS231 (J,FH) SN74AS231 (N,FN)

logic symbol, 'AS230†

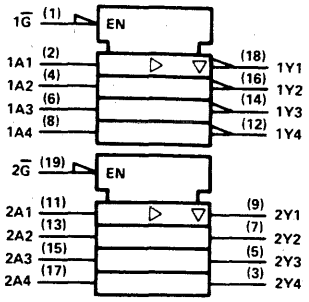

pin assignments

J, N PACKAGES			
1	1G̅	11	2A1
2	1A1	12	1Y4
3	2Y4	13	2A2
4	1A2	14	1Y3
5	2Y3	15	2A3
6	1A3	16	1Y2
7	2Y2	17	2A4
8	1A4	18	1Y1
9	2Y1	19	2G̅
10	GND	20	V_{CC}

logic symbol, 'AS231†

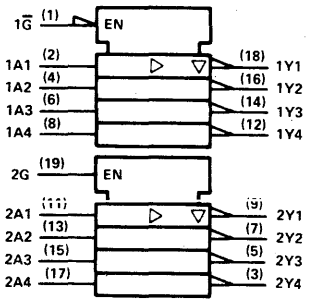

FH, FN PACKAGES			
1	1G̅	11	2A1
2	1A1	12	1Y4
3	2Y4	13	2A2
4	1A2	14	1Y3
5	2Y3	15	2A3
6	1A3	16	1Y2
7	2Y2	17	2A4
8	1A4	18	1Y1
9	2Y1	19	2G̅
10	GND	20	V_{CC}

*2G on 'AS231

240

OCTAL BUFFERS/LINE DRIVERS/LINE RECEIVERS

(inverted three-state outputs)

typical performance

TYPE	DELAY	MAX SOURCE CURRENT	MAX SINK CURRENT	POWER DISSIPATION
SN54ALS240A	5.5 ns	−12 mA	12 mA	52 mW
SN74ALS240A	5.5 ns	−15 mA	24 mA	
SN74ALS240A-1	5.5 ns	−15 mA	48 mA	
SN54AS240	3.5 ns	−12 mA	48 mA	235 mW
SN74AS240	3.5 ns	−15 mA	64 mA	
SN54LS240	10 ns	−12 mA	12 mA	120 mW
SN74LS240	10 ns	−15 mA	24 mA	
SN54S240	5 ns	−12 mA	48 mA	467 mW
SN74S240	5 ns	−15 mA	64 mA	

SN54ALS240A (J,FH) SN74ALS240A (N,FN)
SN74ALS240A-1 (N,FN)
SN54AS240 (J,FH) SN74AS240 (N,FN)
SN54LS240 (J,FH) SN74LS240 (J,N,FN)
SN54S240 (J,FH) SN74S240 (J,N,FN)

logic symbol†

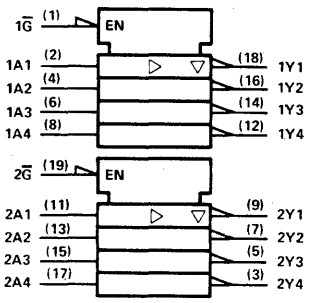

pin assignments

J, N PACKAGES			
1	1G̅	11	2A1
2	1A1	12	1Y4
3	2Y4	13	2A2
4	1A2	14	1Y3
5	2Y3	15	2A3
6	1A3	16	1Y2
7	2Y2	17	2A4
8	1A4	18	1Y1
9	2Y1	19	2G̅
10	GND	20	V_{CC}

FH, FN PACKAGES			
1	1G̅	11	2A1
2	1A1	12	1Y4
3	2Y4	13	2A2
4	1A2	14	1Y3
5	2Y3	15	2A3
6	1A3	16	1Y2
7	2Y2	17	2A4
8	1A4	18	1Y1
9	2Y1	19	2G̅
10	GND	20	V_{CC}

† Pin numbers shown on logic symbols are for J and N packages only.
nc — no internal connection.

Copyright © 1983 by Texas Instruments Incorporated.

241

OCTAL BUFFERS/LINE DRIVERS/LINE RECEIVERS

(non-inverted three-state outputs)

typical performance

TYPE	DELAY	MAX SOURCE CURRENT	MAX SINK CURRENT	POWER DISSIPATION
SN54ALS241A	7 ns	−12 mA	12 mA	68 mW
SN74ALS241A	7 ns	−15 mA	24 mA	
SN74ALS241A-1	7 ns	−15 mA	48 mA	
SN54AS241	4 ns	−12 mA	48 mA	195 mW
SN74AS241	4 ns	−15 mA	64 mA	
SN54LS241	10 ns	−12 mA	12 mA	127 mW
SN74LS241	10 ns	−15 mA	24 mA	
SN54S241	5 ns	−12 mA	48 mA	558 mW
SN74S241	5 ns	−15 mA	64 mA	

SN54ALS241A (J,FH) SN74ALS241A (N,FN)
SN74ALS241A-1 (N,FN)
SN54AS241 (J,FH) SN74AS241 (N,FN)
SN54LS241 (J,FH) SN74LS241 (J,N,FN)
SN54S241 (J,FH) SN74S241 (J,N,FN)

logic symbol†

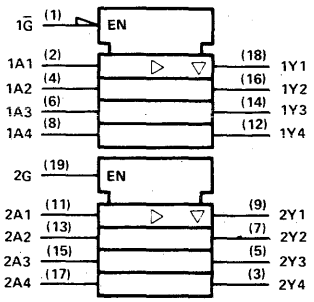

pin assignments

J, N PACKAGES			
1	1G̅	11	2A1
2	1A1	12	1Y4
3	2Y4	13	2A2
4	1A2	14	1Y3
5	2Y3	15	2A3
6	1A3	16	1Y2
7	2Y2	17	2A4
8	1A4	18	1Y1
9	2Y1	19	2G
10	GND	20	V_{CC}

FH, FN PACKAGES			
1	1G̅	11	2A1
2	1A1	12	1Y4
3	2Y4	13	2A2
4	1A2	14	1Y3
5	2Y3	15	2A3
6	1A3	16	1Y2
7	2Y2	17	2A4
8	1A4	18	1Y1
9	2Y1	19	2G
10	GND	20	V_{CC}

242

QUADRUPLE BUS TRANSCEIVERS

(inverted three-state outputs)

typical performance

TYPE	DELAY	MAX SOURCE CURRENT	MAX SINK CURRENT	POWER DISSIPATION
SN54ALS242	6 ns	−12 mA	12 mA	68 mW
SN74ALS242	6 ns	−15 mA	24 mA	
SN74ALS242-1	6 ns	−15 mA	48 mA	
SN54AS242	3.5 ns	−12 mA	48 mA	135 mW
SN74AS242	3.5 ns	−15 mA	64 mA	
SN54LS242	11 ns	−12 mA	12 mA	133 mW
SN74LS242	11 ns	−15 mA	24 mA	

SN54ALS242 (J,FH) SN74ALS242 (N,FN)
SN74ALS242-1 (N,FN)
SN54AS242 (J,FH) SN74AS242 (N,FN)
SN54LS242 (J,FH) SN74LS242 (J,N,FN)

logic symbol†

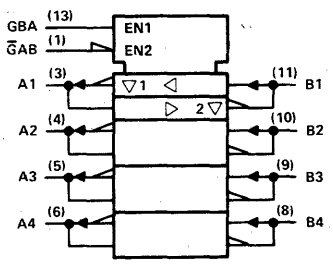

pin assignments

J, N PACKAGES			
1	G̅AB	8	B4
2	nc	9	B3
3	A1	10	B2
4	A2	11	B1
5	A3	12	nc
6	A4	13	GBA
7	GND	14	V_{CC}

FH, FN PACKAGES			
1	nc	11	nc
2	G̅AB	12	B4
3	nc	13	B3
4	A1	14	B2
5	nc	15	nc
6	A2	16	B1
7	nc	17	nc
8	A3	18	nc
9	A4	19	GBA
10	GND	20	V_{CC}

† Pin numbers shown on logic symbols are for J and N packages only.
nc — no internal connection.

Copyright © 1983 by Texas Instruments Incorporated.

243

QUADRUPLE BUS TRANSCEIVERS
(non-inverted three-state outputs)
typical performance

TYPE	DELAY	MAX SOURCE CURRENT	MAX SINK CURRENT	POWER DISSI-PATION
SN54ALS243	8 ns	−12 mA	12 mA	93 mW
SN74ALS243	8 ns	−15 mA	24 mA	
SN74ALS243-1	8 ns	−15 mA	48 mA	
SN54AS243	4.5 ns	−12 mA	48 mA	180 mW
SN74AS243	4.5 ns	−15 mA	64 mA	
SN54LS243	12 ns	−12 mA	12 mA	138 mW
SN74LS243	12 ns	−15 mA	24 mA	

SN54ALS243 (J,FH) SN74ALS243 (N,FN)
SN74ALS243-1 (N,FN)
SN54AS243 (J,FH) SN74AS243 (N,FN)
SN54LS243 (J,FH) SN74LS243 (J,N,FN)

logic symbol†

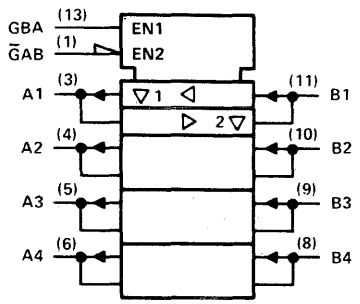

pin assignments

J, N PACKAGES			
1	$\overline{G}$AB	8	B4
2	nc	9	B3
3	A1	10	B2
4	A2	11	B1
5	A3	12	nc
6	A4	13	GBA
7	GND	14	V_{CC}

FH, FN PACKAGES			
1	nc	11	nc
2	$\overline{G}$AB	12	B4
3	nc	13	B3
4	A1	14	B2
5	nc	15	nc
6	A2	16	B1
7	nc	17	nc
8	A3	18	nc
9	A4	19	GBA
10	GND	20	V_{CC}

244

OCTAL BUFFERS/LINE DRIVERS/LINE RECEIVERS
(non-inverted three-state outputs)
typical performance

TYPE	DELAY	MAX SOURCE CURRENT	MAX SINK CURRENT	POWER DISSI-PATION
SN54ALS244A	7 ns	−12 mA	12 mA	68 mW
SN74ALS244A	7 ns	−15 mA	24 mA	
SN74ALS244A-1	7 ns	−15 mA	48 mA	
SN54AS244	4.5 ns	−12 mA	48 mA	235 mW
SN74AS244	4.5 ns	−15 mA	64 mA	
SN54LS244	12 ns	−12 mA	12 mA	127 mW
SN74LS244	12 ns	−15 mA	24 mA	
SN54S244	6 ns	−12 mA	48 mA	558 mW
SN74S244	6 ns	−15 mA	64 mA	

SN54ALS244A (J,FH) SN74ALS244A (N,FN)
SNALS244A-1 (N,FN)
SN54AS244 (J,FH) SN74AS244 (N,FN)
SN54LS244 (J,FH) SN74LS244 (J,N,FN)
SN54S244 (J,FH) SN74S244 (J,N,FN)

logic symbol†

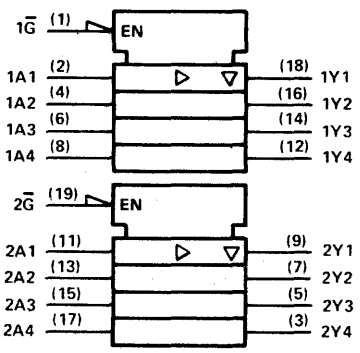

pin assignments

J, N PACKAGES			
1	1$\overline{G}$	11	2A1
2	1A1	12	1Y4
3	2Y4	13	2A2
4	1A2	14	1Y3
5	2Y3	15	2A3
6	1A3	16	1Y2
7	2Y2	17	2A4
8	1A4	18	1Y1
9	2Y1	19	2$\overline{G}$
10	GND	20	V_{CC}

FH, FN PACKAGES			
1	1$\overline{G}$	11	2A1
2	1A1	12	1Y4
3	2Y4	13	2A2
4	1A2	14	1Y3
5	2Y3	15	2A3
6	1A3	16	1Y2
7	2Y2	17	2A4
8	1A4	18	1Y1
9	2Y1	19	2$\overline{G}$
10	GND	20	V_{CC}

† Pin numbers shown on logic symbols are for J and N packages only.
nc — no internal connection.

See ALS/AS availability at front of this Product Guide.

Copyright © 1983 by Texas Instruments Incorporated.

TEXAS INSTRUMENTS
POST OFFICE BOX 225012 • DALLAS, TEXAS 75265

© IC MASTER 1984

245

OCTAL BUS TRANSCEIVERS
(non-inverted three-state outputs)
typical performance

TYPE	DELAY	MAX SOURCE CURRENT	MAX SINK CURRENT	POWER DISSI-PATION
SN54ALS245A	6 ns	−12 mA	12 mA	173 mW
SN74ALS245A	6 ns	−15 mA	24 mA	
SN74ALS245A-1	6 ns	−15 mA	48 mA	
SN54AS245	6 ns	−12 mA	32 mA	310 mW
SN74AS245	6 ns	−15 mA	48 mA	
SN54LS245	8 ns	−12 mA	12 mA	290 mW
SN74LS245	8 ns	−15 mA	24 mA	

SN54ALS245A (J,FH) SN74ALS245A (N,FN)
SN74ALS245A-1 (N,FN)
SN54AS245 (J,FH) SN74AS245 (N,FN)
SN54LS245 (J,FH) SN74LS245 (J,N,FN)

logic symbol†

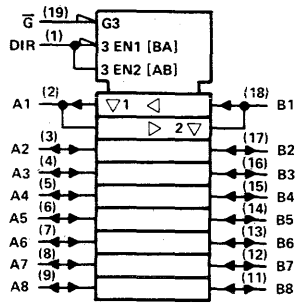

pin assignments

J, N PACKAGES			
1	DIR	11	B8
2	A1	12	B7
3	A2	13	B6
4	A3	14	B5
5	A4	15	B4
6	A5	16	B3
7	A6	17	B2
8	A7	18	B1
9	A8	19	$\overline{G}$
10	GND	20	V_{CC}

FH, FN PACKAGES			
1	DIR	11	B8
2	A1	12	B7
3	A2	13	B6
4	A3	14	B5
5	A4	15	B4
6	A5	16	B3
7	A6	17	B2
8	A7	18	B1
9	A8	19	G
10	GND	20	V_{CC}

246
247

BCD-TO-SEVEN-SEGMENT DECODERS/DRIVERS WITH RIPPLE BLANKING
(246-active-low, open-collector, 30-volt outputs)
(247-active-low, open-collector, 15-volt outputs)

logic symbol†

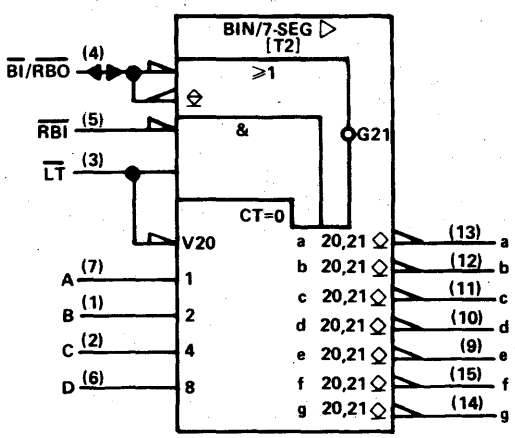

pin assignments

J, N PACKAGES			
1	B	9	e
2	C	10	d
3	$\overline{LT}$	11	c
4	$\overline{BI}/\overline{RBO}$	12	b
5	$\overline{RBI}$	13	a
6	D	14	g
7	A	15	f
8	GND	16	V_{CC}

FH, FN PACKAGES			
1	nc	11	nc
2	B	12	e
3	C	13	d
4	$\overline{LT}$	14	c
5	$\overline{BI}/\overline{RBO}$	15	b
6	nc	16	nc
7	$\overline{RBI}$	17	a
8	D	18	g
9	A	19	f
10	GND	20	V_{CC}

typical performance

TYPE	OUTPUT SINK CURRENT	OFF-STATE OUTPUT VOLTAGE	TOTAL POWER
'246	40 mA	30 V	320 mW
'247	40 mA	15 V	320 mW
SN54LS247	12 mA	15 V	35 mW
SN74LS247	24 mA	15 V	35 mW

SN54246 (J,FH) SN74246 (J,N)
SN54247 (J,FH) SN74247 (J,N)
SN54LS247 (J,FH) SN74LS247 (J,N,FN)

† Pin numbers shown on logic symbols are for J and N packages only.
nc — no internal connection.

FONT TABLE T2 — RESULTANT DISPLAYS USING '246 AND '247

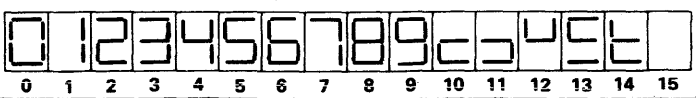

Copyright © 1983 by Texas Instruments Incorporated

248

BCD-TO-SEVEN SEGMENT DECODERS/DRIVERS
(internal pull-up outputs)

logic symbol†

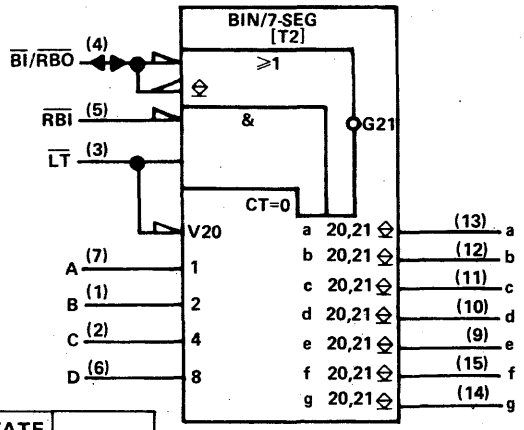

pin assignments

J, N PACKAGES				FH, FN PACKAGES			
1	B	9	e	1	nc	11	nc
2	C	10	d	2	B	12	e
3	$\overline{LT}$	11	c	3	C	13	d
4	$\overline{BI}/\overline{RBO}$	12	b	4	$\overline{LT}$	14	c
5	$\overline{RBI}$	13	a	5	$\overline{BI}/\overline{RBO}$	15	b
6	D	14	g	6	nc	16	nc
7	A	15	f	7	$\overline{RBI}$	17	a
8	GND	16	V_{CC}	8	D	18	g
				9	A	19	f
				10	GND	20	V_{CC}

typical performance

TYPE	OUTPUT SINK CURRENT	OFF-STATE OUTPUT VOLTAGE	TOTAL POWER
'248	6.4 mA	5.5 V	265 mW
SN54LS248	2 mA	5.5 V	125 mW
SN74LS248	6 mA	5.5 V	125 mW

SN54248 (J,FH) SN74248 (J,N)
SN54LS248 (J,FH) SN74LS248 (J,N,FN)

249

BCD-TO-SEVEN SEGMENT DECODERS/DRIVERS
(open-collector outputs)

logic symbol†

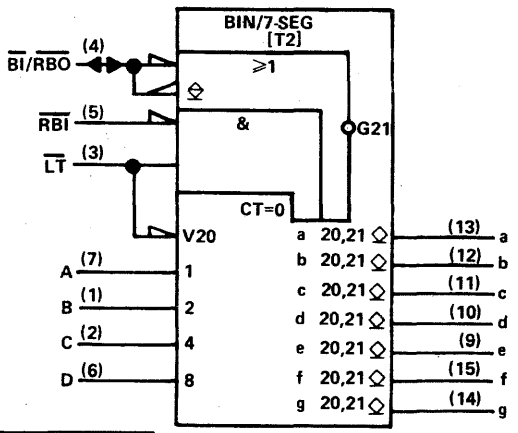

pin assignments

J, N PACKAGES				FH, FN PACKAGES			
1	B	9	e	1	nc	11	nc
2	C	10	d	2	B	12	e
3	$\overline{LT}$	11	c	3	C	13	d
4	$\overline{BI}/\overline{RBO}$	12	b	4	$\overline{LT}$	14	c
5	$\overline{RBI}$	13	a	5	$\overline{BI}/\overline{RBO}$	15	b
6	D	14	g	6	nc	16	nc
7	A	15	f	7	$\overline{RBI}$	17	a
8	GND	16	V_{CC}	8	D	18	g
				9	A	19	f
				10	GND	20	V_{CC}

typical performance

TYPE	OUTPUT SINK CURRENT	OFF-STATE OUTPUT VOLTAGE	TOTAL POWER
'249	10 mA	5.5 V	265 mW
SN54LS249	4 mA	5.5 V	40 mW
SN74LS249	8 mA	5.5 V	40 mW

SN54249 (J,FH) SN74249 (J,N)
SN54LS249 (J,FH) SN74LS249 (J,N,FN)

† Pin numbers shown on logic symbols are for J and N packages only.
nc — no internal connection.

FONT TABLE T2 — RESULTANT DISPLAYS USING '248 AND '249

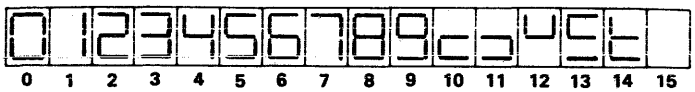

Copyright © 1983 by Texas Instruments Incorporated.

251

DATA SELECTORS/ MULTIPLEXERS

(true and inverted three-state outputs)

typical performance

TYPE	DELAY TIMES			TOTAL POWER
	DATA TO INV OUTPUT	DATA TO NON-INV OUTPUT	FROM ENABLE	
'251	17 ns	21 ns	21 ns	250 mW
'ALS251	6 ns	5 ns	4.5 ns	37.5 mW
'AS251	2.7 ns	3.5 ns	5.5 ns	140 mW
'LS251	17 ns	21 ns	21 ns	35 mW
'S251	4.5 ns	8 ns	14 ns	275 mW

SN54251 (J,FH) SN74251 (J,N)
SN54ALS251 (J,FH) SN74ALS251 (N,FN)
SN54AS251 (J,FH) SN74AS251 (N,FN)
SN54LS251 (J,FH) SN74LS251 (J,N,FN)
SN54S251 (J,FH) SN74S251 (J,N,FN)

logic symbol†

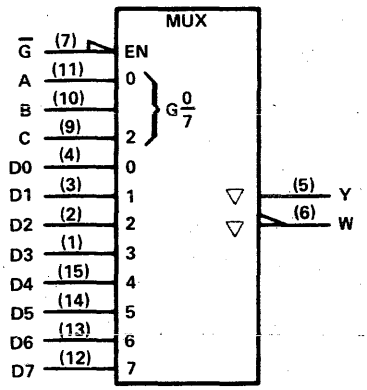

pin assignments

J, N PACKAGES			
1	D3	9	C
2	D2	10	B
3	D1	11	A
4	D0	12	D7
5	Y	13	D6
6	W	14	D5
7	$\overline{G}$	15	D4
8	GND	16	V_{CC}

FH, FN PACKAGES			
1	nc	11	nc
2	D3	12	C
3	D2	13	B
4	D1	14	A
5	D0	15	D7
6	nc	16	nc
7	Y	17	D6
8	W	18	D5
9	$\overline{G}$	19	D4
10	GND	20	V_{CC}

253

DUAL DATA SELECTORS/ MULTIPLEXERS

(three-state outputs)

typical performance

TYPE	DELAY TIMES		TOTAL POWER
	DATA TO NON-INV OUTPUT	FROM ENABLE	
'ALS253	5 ns	4.5 ns	32 mW
'AS253	3.3 ns	5.5 ns	117 mW
'LS253	12 ns	16 ns	35 mW

SN54ALS253 (J,FH) SN74ALS253 (N,FN)
SN54AS253 (J,FH) SN74AS253 (N,FN)
SN54LS253 (J,FH) SN74LS253 (J,N,FN)
SN54S253 (J,FH) SN74S253 (J,N,FN)

logic symbol†

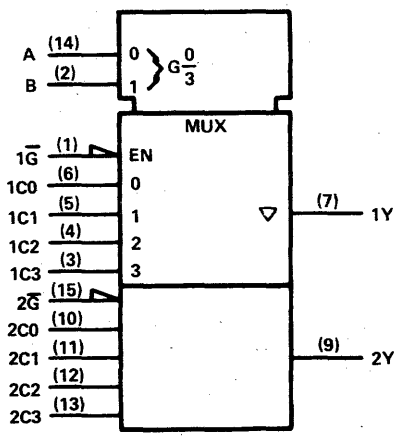

pin assignments

J, N PACKAGES			
1	$1\overline{G}$	9	2Y
2	B	10	2C0
3	1C3	11	2C1
4	1C2	12	2C2
5	1C1	13	2C3
6	1C0	14	A
7	1Y	15	$2\overline{G}$
8	GND	16	V_{CC}

FH, FN PACKAGES			
1	nc	11	nc
2	$1\overline{G}$	12	2Y
3	B	13	2C0
4	1C3	14	2C1
5	1C2	15	2C2
6	nc	16	nc
7	1C1	17	2C3
8	1C0	18	A
9	1Y	19	$2\overline{G}$
10	GND	20	V_{CC}

† Pin numbers shown on logic symbols are for J and N packages only.
nc — no internal connection.

Copyright © 1983 by Texas Instruments Incorporated.

257

QUAD DATA SELECTORS/ MULTIPLEXERS

(non-inverted three-state outputs)

TYPE	DELAY TIMES		TOTAL POWER
	DATA TO NON-INV OUTPUT	FROM ENABLE	
'ALS257	4.3 ns	7.5 ns	33.5 mW
'AS257	3 ns	4 ns	85 mW
'LS257	11 ns	18 ns	60 mW
'S257	5 ns	14 ns	320 mW

SN54ALS257 (J,FH) SN74ALS257 (N,FN)
SN54AS257 (J,FH) SN74AS257 (N,FN)
SN54LS257 (J,FH) SN74LS257 (J,N,FN)
SN54S257 (J,FH) SN74S257 (J,N,FN)

logic symbol, 'ALS257, 'LS257†

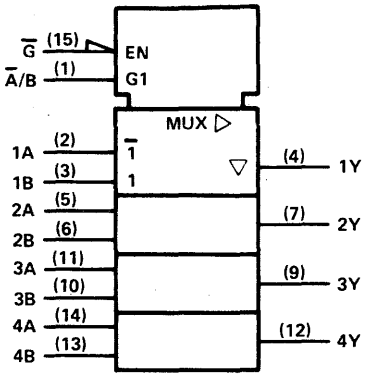

logic symbol, 'S257†

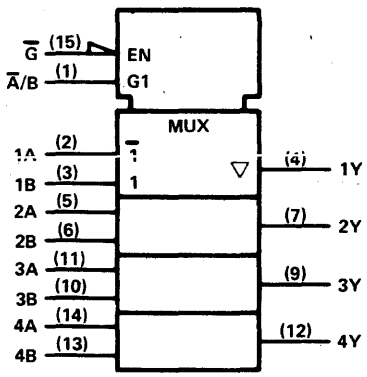

pin assignments

J, N PACKAGES				FH, FN PACKAGES			
1	A/B	9	3Y	1	nc	11	nc
2	1A	10	3B	2	A/B	12	3Y
3	1B	11	3A	3	1A	13	3B
4	1Y	12	4Y	4	1B	14	3A
5	2A	13	4B	5	1Y	15	4Y
6	2B	14	4A	6	nc	16	nc
7	2Y	15	G	7	2A	17	4B
8	GND	16	V_{CC}	8	2B	18	4A
				9	2Y	19	G
				10	GND	20	V_{CC}

† Pin numbers shown on logic symbols are for J and N packages only.
nc — no internal connection.

Copyright © 1983 by Texas Instruments Incorporated.

TEXAS INSTRUMENTS
POST OFFICE BOX 225012 • DALLAS, TEXAS 75265

© IC MASTER 1984

258

QUAD DATA SELECTORS/ MULTIPLEXERS
(inverted three-state outputs)

typical performance

TYPE	DELAY TIMES		TOTAL POWER
	DATA TO INV OUTPUT	FROM ENABLE	
'ALS258	3 ns	7.5 ns	29 mW
'AS258	2.5 ns	4 ns	65 mW
'LS258	11 ns	19 ns	60 mW
'S258	4 ns	14 ns	280 mW

SN54ALS258 (J,FH) SN74ALS258 (N,FN)
SN54AS258 (J,FH) SN74AS258 (N,FN)
SN54LS258 (J,FH) SN74LS258 (J,N,FN)
SN54S258 (J,FH) SN74S258 (J,N,FN)

logic symbol, 'ALS258, 'LS258†

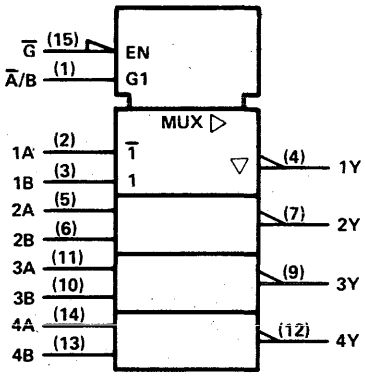

logic symbol, 'S258†

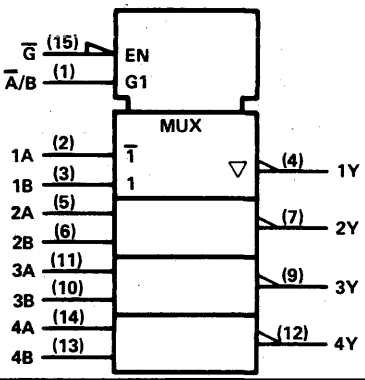

pin assignments

J, N PACKAGES				FH, FN PACKAGES			
1	A/B	9	3Y	1	nc	11	nc
2	1A	10	3B	2	A/B	12	3Y
3	1B	11	3A	3	1A	13	3B
4	1Y	12	4Y	4	1B	14	3A
5	2A	13	4B	5	1Y	15	4Y
6	2B	14	4A	6	nc	16	nc
7	2Y	15	G	7	2A	17	4B
8	GND	16	V_{CC}	8	2B	18	4A
				9	2Y	19	G
				10	GND	20	V_{CC}

259

8-BIT ADDRESSABLE LATCHES

logic symbol†

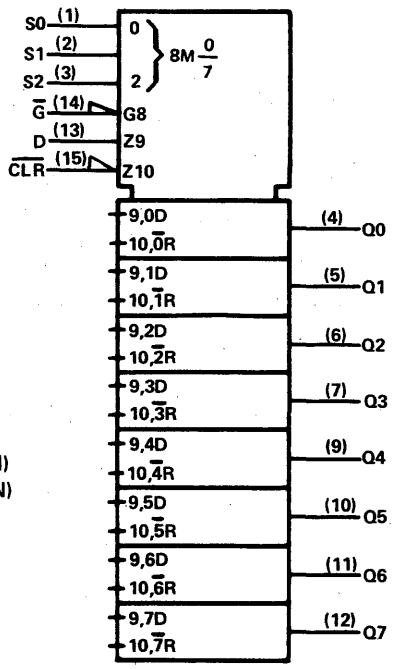

typical performance

TYPE	CLEAR	DELAY	TOTAL POWER
'259	LOW	12 ns	300 mW
'ALS259	LOW		
'LS259	LOW	17 ns	110 mW

SN54259 (J,FH) SN74259 (J,N)
SN54ALS259 (J,FH) SN74ALS259 (N,FN)
SN54LS259 (J,FH) SN74LS259 (J,N,FN)

pin assignments

J, N PACKAGES				FH, FN PACKAGES			
1	S0	9	Q4	1	nc	11	nc
2	S1	10	Q5	2	S0	12	Q4
3	S2	11	Q6	3	S1	13	Q5
4	Q0	12	Q7	4	S2	14	Q6
5	Q1	13	D	5	Q0	15	Q7
6	Q2	14	G	6	nc	16	nc
7	Q3	15	CLR	7	Q1	17	D
8	GND	16	V_{CC}	8	Q2	18	G
				9	Q3	19	CLR
				10	GND	20	V_{CC}

† Pin numbers shown on logic symbols are for J and N packages only.
nc — no internal connection.

Copyright © 1983 by Texas Instruments Incorporated.

260

DUAL 5-INPUT POSITIVE-NOR GATES

TYPE	POWER/ GATE	DELAY
'S260	54 mW	4 ns

SN54S260 (J,FH) SN74S260 (J,N,FN)

logic symbol†

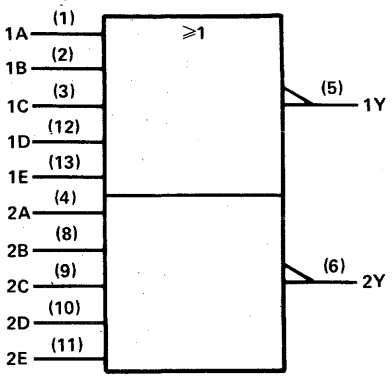

pin assignments

J, N PACKAGES				FH, FN PACKAGES			
1	1A	8	2B	1	nc	11	nc
2	1B	9	2C	2	1A	12	2B
3	1C	10	2D	3	1B	13	2C
4	2A	11	2E	4	1C	14	2D
5	1Y	12	1D	5	nc	15	nc
6	2Y	13	1E	6	2A	16	2E
7	GND	14	V_{CC}	7	nc	17	nc
				8	1Y	18	1D
				9	2Y	19	1E
				10	GND	20	V_{CC}

positive logic: $Y = \overline{ABCD}$

261

2-BIT BY 4-BIT PARALLEL BINARY MULTIPLIERS

typical performance

TYPE	POWER	TIME**
'LS261	100 mW	25 ns

SN54LS261 (J,FH) SN74LS261 (J,N,FN)

** 5-Bit Product Time

logic symbol†

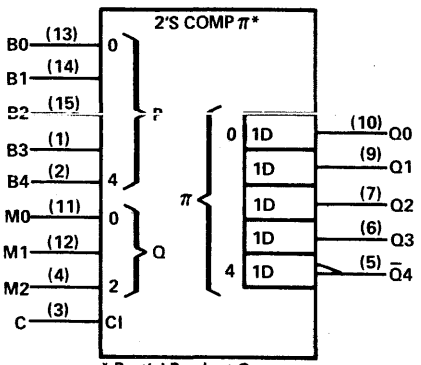

* Partial-Product Generator

pin assignments

J, N PACKAGES				FH, FN PACKAGES			
1	B3	9	Q1	1	nc	11	nc
2	B4	10	Q0	2	B3	12	Q1
3	C	11	M0	3	B4	13	Q0
4	M2	12	M1	4	C	14	M0
5	Q̄4	13	B0	5	M2	15	M1
6	Q3	14	B1	6	nc	16	nc
7	Q2	15	B2	7	Q̄4	17	B0
8	GND	16	V_{CC}	8	Q3	18	B1
				9	Q2	19	B2
				10	GND	20	V_{CC}

264

LOOK AHEAD CARRY GENERATOR

SN54AS264 (J,FH) SN74AS264 (N,FN)

logic symbol†

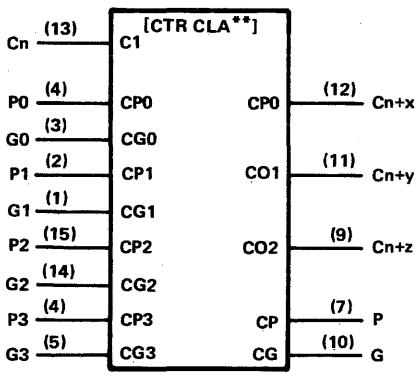

**CLA = Carry Look Ahead

pin assignments

J, N PACKAGES				FH PACKAGE			
1	G1	9	$C_n + z$	1	nc	11	nc
2	P1	10	G	2	G1	12	$C_n + z$
3	G0	11	$C_n + y$	3	P1	13	G
4	P0	12	$C_n + x$	4	G0	14	$C_n + y$
5	G3	13	C_n	5	P0	15	$C_n + x$
6	P3	14	G2	6	nc	16	nc
7	P	15	P2	7	G3	17	C_n
8	GND	16	V_{CC}	8	P3	18	G2
				9	P	19	P2
				10	GND	20	V_{CC}

† Pin numbers shown on logic symbols are for J and N packages only.
nc — no internal connection.

Copyright © 1983 by Texas Instruments Incorporated.

265

QUAD COMPLEMENTARY-OUTPUT ELEMENTS

typical performance

TYPE	POWER
'265	125 mW

SN54265 (J,FH) SN74265 (J,N)

logic symbol†

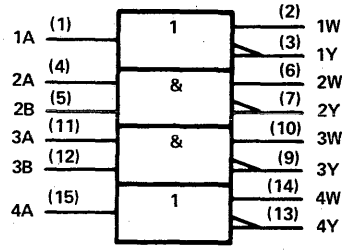

pin assignments

J, N PACKAGES				FH PACKAGE			
1	1A	9	3Y	1	nc	11	nc
2	1W	10	3W	2	1A	12	3Y
3	1Y	11	3A	3	1W	13	3W
4	2A	12	3B	4	1Y	14	3A
5	2B	13	4Y	5	2A	15	3B
6	2W	14	4W	6	nc	16	nc
7	2Y	15	4A	7	2B	17	4Y
8	GND	16	V_{CC}	8	2W	18	4W
				9	2Y	19	4A
				10	GND	20	V_{CC}

266

QUAD 2-INPUT EXCLUSIVE-NOR GATES WITH OPEN-COLLECTOR OUTPUTS

typical performance

TYPE	POWER	DELAY
'LS266	40 mW	18 ns

SN54LS266 (J,FH) SN74LS266 (J,N,FN)

logic symbol†

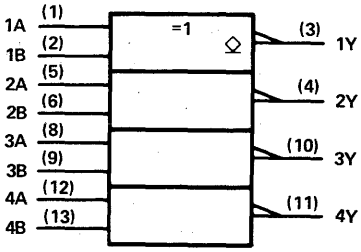

positive logic: $Y = \overline{A \oplus B} = AB + \overline{AB}$

pin assignments

J, N PACKAGES				FH, FN PACKAGES			
1	1A	8	3A	1	nc	11	nc
2	1B	9	3B	2	1A	12	3A
3	1Y	10	3Y	3	1B	13	3B
4	2Y	11	4Y	4	1Y	14	3Y
5	2A	12	4A	5	nc	15	nc
6	2B	13	4B	6	2Y	16	4Y
7	GND	14	V_{CC}	7	nc	17	nc
				8	2A	18	4A
				9	2B	19	4B
				10	GND	20	V_{CC}

273

OCTAL D-TYPE FLIP-FLOPS (common clock, single-rail outputs)

typical performance

TYPE	FREQ	POWER PER F-F	DATA TIMES SETUP	DATA TIMES HOLD
'273	40 MHz	39 mW	20 ns†	5 ns†
'ALS273	50 MHz	9.4 mW		
'LS273	40 MHz	10.6 mW	20 ns†	5 ns†

† Rising edge of clock pulse

SN54273 (J,FH) SN74273 (J,N)
SN54ALS273 (J,FH) SN74ALS273 (N,FN)
SN54LS273 (J,FH) SN74LS273 (J,N,FN)

logic symbol†

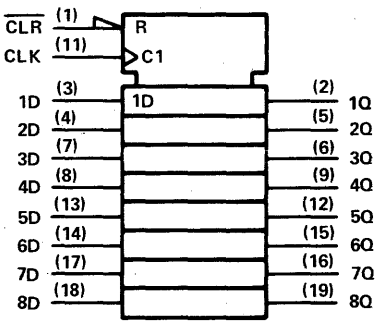

pin assignments

J, N PACKAGES				FH, FN PACKAGES			
1	$\overline{CLR}$	11	CLK	1	$\overline{CLR}$	11	CLK
2	1Q	12	5Q	2	1Q	12	5Q
3	1D	13	5D	3	1D	13	5D
4	2D	14	6D	4	2D	14	6D
5	2Q	15	6Q	5	2Q	15	6Q
6	3Q	16	7Q	6	3Q	16	7Q
7	3D	17	7D	7	3D	17	7D
8	4D	18	8D	8	4D	18	8D
9	4Q	19	8Q	9	4Q	19	8Q
10	GND	20	V_{CC}	10	GND	20	V_{CC}

† Pin numbers shown on logic symbols are for J and N packages only.
nc — no internal connection.

Copyright © 1983 by Texas Instruments Incorporated.

TEXAS INSTRUMENTS
POST OFFICE BOX 225012 • DALLAS, TEXAS 75265

274

4-BIT BY 4-BIT BINARY MULTIPLIERS

typical performance

TYPE	POWER	TIME*
'S274	525 mW	50 ns

SN54S274 (J,FH) SN74S274 (J,N,FN)

* 8-Bit Product Time

logic symbol†

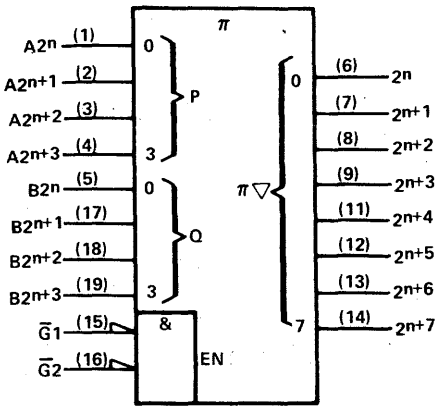

pin assignments

J, N PACKAGES				FH, FN PACKAGES			
1	$A2^n$	11	2^{n+4}	1	$A2^n$	11	2^{n+4}
2	$A2^{n+1}$	12	2^{n+5}	2	$A2^{n+1}$	12	2^{n+5}
3	$A2^{n+2}$	13	2^{n+6}	3	$A2^{n+2}$	13	2^{n+6}
4	$A2^{n+3}$	14	2^{n+7}	4	$A2^{n+3}$	14	2^{n+7}
5	$B2^n$	15	$\overline{G}1$	5	$B2^n$	15	$\overline{G}1$
6	2^n	16	$\overline{G}2$	6	2^n	16	$\overline{G}2$
7	2^{n+1}	17	$B2^{n+1}$	7	2^{n+1}	17	$B2^{n+1}$
8	2^{n+2}	18	$B2^{n+2}$	8	2^{n+2}	18	$B2^{n+2}$
9	2^{n+3}	19	$B2^{n+3}$	9	2^{n+3}	19	$B2^{n+3}$
10	GND	20	V_{CC}	10	GND	20	V_{CC}

275

7-BIT-SLICE WALLACE TREES

typical performance

TYPE	POWER
'LS275	125 mW
'S275	525 mW

SN54LS275 (J,FH) SN74LS275 (J,N,FN)
SN54S275 (J,FH) SN74S275 (J,N,FN)

logic symbol†

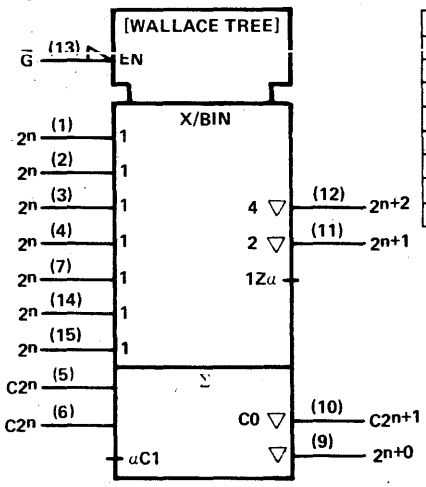

pin assignments

J, N PACKAGES				FH, FN PACKAGES			
1	2^n	9	2^{n+0}	1	nc	11	nc
2	2^n	10	$C2^{n+1}$	2	2^n	12	2^{n+0}
3	2^n	11	2^{n+1}	3	2^n	13	$C2^{n+1}$
4	2^n	12	2^{n+2}	4	2^n	14	2^{n+1}
5	$C2^n$	13	$\overline{G}$	5	2^n	15	2^{n+2}
6	$C2^n$	14	2^n	6	nc	16	nc
7	2^n	15	2^n	7	$C2^n$	17	$\overline{G}$
8	GND	16	V_{CC}	8	$C2^n$	18	2^n
				9	2^n	19	2^n
				10	GND	20	V_{CC}

276

QUAD J-$\overline{K}$ FLIP-FLOPS
(separate clocks, edge-triggering, common direct clear and preset)

typical performance

TYPE	FREQ	POWER/ F-F	DATA TIMES	
			SETUP	HOLD
'276	50 MHz	75 mW	3 ns↓	10 ns↓

↓ Falling edge of clock pulse

SN54276 (J,FH) SN74276 (J,N)

logic symbol†

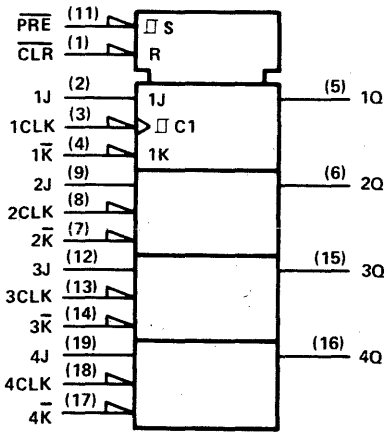

pin assignments

J, N PACKAGES				FH PACKAGE			
1	$\overline{CLR}$	11	$\overline{PRE}$	1	$\overline{CLR}$	11	$\overline{PRE}$
2	1J	12	3J	2	1J	12	3J
3	1CLK	13	3CLK	3	1CLK	13	3CLK
4	$1\overline{K}$	14	$3\overline{K}$	4	$1\overline{K}$	14	$3\overline{K}$
5	1Q	15	3Q	5	1Q	15	3Q
6	2Q	16	4Q	6	2Q	16	4Q
7	$2\overline{K}$	17	$4\overline{K}$	7	$2\overline{K}$	17	$4\overline{K}$
8	2CLK	18	4CLK	8	2CLK	18	4CLK
9	2J	19	4J	9	2J	19	4J
10	GND	20	V_{CC}	10	GND	20	V_{CC}

† Pin numbers shown on logic symbols are for J and N packages only.
nc – no internal connection.

Copyright © 1983 by Texas Instruments Incorporated.

TEXAS INSTRUMENTS
POST OFFICE BOX 225012 • DALLAS, TEXAS 75265

© IC MASTER 1984

278

4-BIT CASCADABLE PRIORITY REGISTERS

typical performance

TYPE	POWER	DELAY
'278	275 mW	35 ns

SN54278 (J,FH) SN74278 (J,N)

logic symbol†

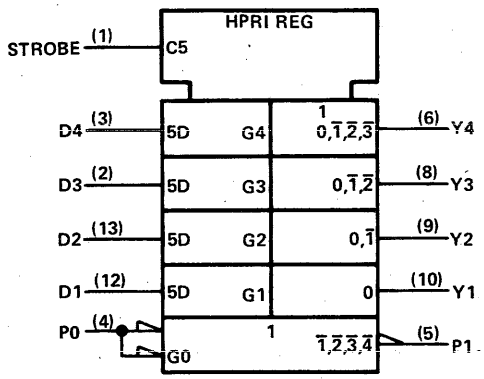

pin assignments

J, N PACKAGES				FH PACKAGE			
1	STRB	8	Y3	1	nc	11	nc
2	D3	9	Y2	2	STRB	12	Y3
3	D4	10	Y1	3	D3	13	Y2
4	P0	11	nc	4	D4	14	Y1
5	P1	12	D1	5	nc	15	nc
6	Y4	13	D2	6	P0	16	nc
7	GND	14	V_{CC}	7	nc	17	nc
				8	P1	18	D1
				9	Y4	19	D2
				10	GND	20	V_{CC}

279

QUAD $\overline{S}$-$\overline{R}$ LATCHES

typical performance

TYPE	POWER	DELAY
'279	90 mW	12 ns
'LS279	19 mW	12 ns

SN54279 (J,FH) SN74279 (J,N,FN)
SN54LS279 (J,FH) SN74LS279 (J,N,FN)

logic symbol†

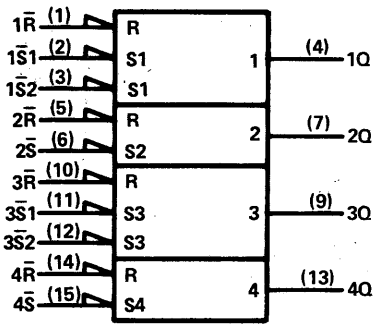

pin assignments

J, N PACKAGES				FH, FN PACKAGES			
1	1R̄	9	3Q	1	nc	11	nc
2	1S̄1	10	3R̄	2	1R̄	12	3Q
3	1S̄2	11	3S̄1	3	1S̄1	13	3R̄
4	1Q	12	3S̄2	4	1S̄2	14	3S̄1
5	2R̄	13	4Q	5	1Q	15	3S̄2
6	2S̄	14	4R̄	6	nc	16	nc
7	2Q	15	4S̄	7	2R̄	17	4Q
8	GND	16	V_{CC}	8	2S̄	18	4R̄
				9	2Q	19	4S̄
				10	GND	20	V_{CC}

280

9-BIT ODD/EVEN PARITY GENERATORS/CHECKERS

typical performance

TYPE	POWER	DELAY
'AS280		
'LS280	80 mW	31 ns
'S280	335 mW	13 ns

SN54AS280 (J,FH) SN74AS280 (N,FN)
SN54LS280 (J,FH) SN74LS280 (J,N,FN)
SN54S280 (J,FH) SN74S280 (J,N,FN)

logic symbol†

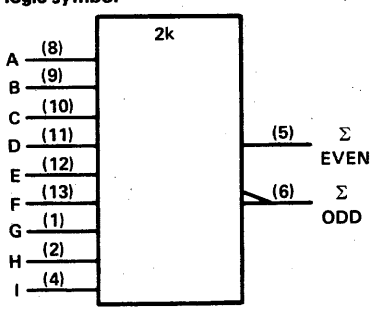

pin assignments

J, N PACKAGES				FH, FN PACKAGES			
1	G	8	A	1	nc	11	nc
2	H	9	B	2	G	12	A
3	nc	10	C	3	H	13	B
4	I	11	D	4	nc	14	C
5	ΣEVEN	12	E	5	nc	15	nc
6	ΣODD	13	F	6	I	16	D
7	GND	14	V_{CC}	7	nc	17	nc
				8	ΣEVEN	18	E
				9	ΣODD	19	F
				10	GND	20	V_{CC}

† Pin numbers shown on logic symbols are for J and N packages only.
nc — no internal connection.

Copyright © 1983 by Texas Instruments Incorporated.

281

4-BIT PARALLEL BINARY ACCUMULATORS

typical performance

TYPE	ADD TIME	TOTAL POWER
'S281	20 ns	720 mW

SN54S281 (J,FH)

SN74S281 (J,N,FN)

logic symbol†

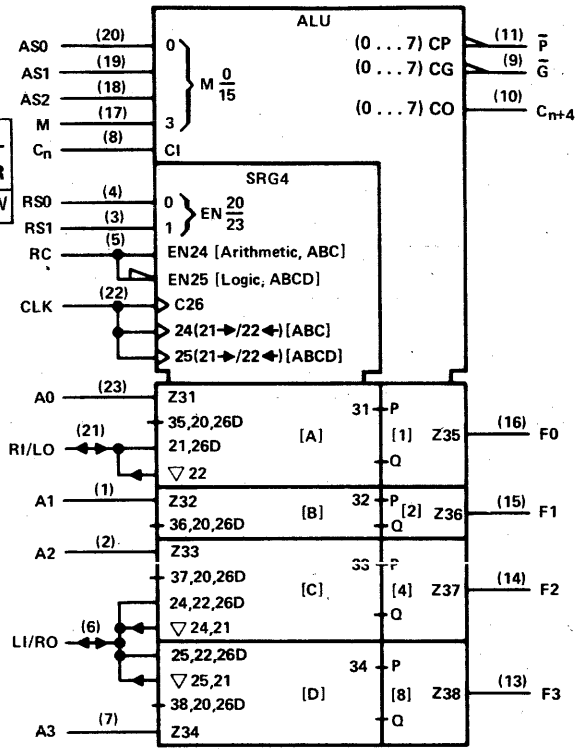

pin assignments

J,N PACKAGES				FH, FN PACKAGES			
1	A1	13	F3	1	nc	15	nc
2	A2	14	F2	2	A1	16	F3
3	RS1	15	F1	3	A2	17	F2
4	RS0	16	F0	4	RS1	18	F1
5	RC	17	M	5	RS0	19	F0
6	L1/R0	18	AS2	6	RC	20	M
7	A3	19	AS1	7	L1/R0	21	AS2
8	C_n	20	AS0	8	nc	22	nc
9	$\overline{G}$	21	R1/L0	9	A3	23	AS1
10	C_{n+4}	22	CLK	10	C_n	24	AS0
11	$\overline{P}$	23	A0	11	$\overline{G}$	25	R1/L0
12	GND	24	V_{CC}	12	C_{n+4}	26	CLK
				13	$\overline{P}$	27	A0
				14	GND	28	V_{CC}

282

LOOK-AHEAD CARRY GENERATOR WITH SELECTABLE CARRY INPUTS

logic symbol†

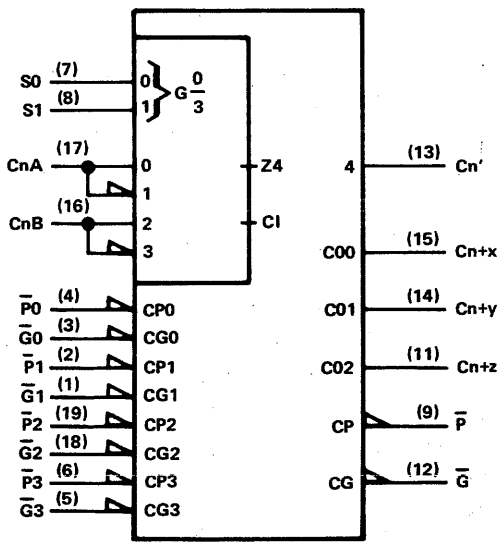

pin assignments

J, N PACKAGE				FH, FN PACKAGE			
1	$\overline{G}1$	11	C_{n+z}	1	$\overline{G}1$	11	C_{n+z}
2	$\overline{P}1$	12	G	2	$\overline{P}1$	12	G
3	$\overline{G}0$	13	Cn'	3	$\overline{G}0$	13	Cn'
4	$\overline{P}0$	14	C_{n+y}	4	$\overline{P}0$	14	C_{n+y}
5	$\overline{G}3$	15	C_{n+x}	5	$\overline{G}3$	15	C_{n+x}
6	$\overline{P}3$	16	CnB	6	$\overline{P}3$	16	CnB
7	S0	17	CnA	7	S0	17	CnA
8	S1	18	$\overline{G}2$	8	S1	18	$\overline{G}2$
9	$\overline{P}$	19	$\overline{P}2$	9	$\overline{P}$	19	$\overline{P}2$
10	GND	20	V_{CC}	10	GND	20	V_{CC}

SN54AS282 (J,FH) SN74AS282 (N,FN)

† Pin numbers shown on logic symbols are for J and N packages only.
nc — no internal connection.

Copyright © 1983 by Texas Instruments Incorporated.

283

4-BIT BINARY FULL ADDERS

typical performance

TYPE	CARRY TIME	ADD TIME	POWER/ BIT
'283	10 ns	16 ns	76 mW
'LS283	10 ns	15 ns	24 mW
'S283	7 ns	11 ns	124 mW

SN54283 (J,FH) SN74283 (J,N)
SN54LS283 (J,FH) SN74LS283 (J,N,FN)
SN54S283 (J,FH) SN74S283 (J,N,FN)

logic symbol†

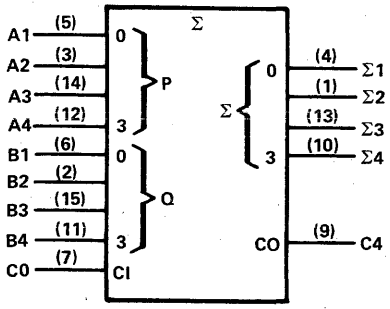

typical performance

J, N PACKAGES				FH, FN PACKAGES			
1	Σ2	9	C4	1	nc	11	nc
2	B2	10	Σ4	2	Σ2	12	C4
3	A2	11	B4	3	B2	13	Σ4
4	Σ1	12	A4	4	A2	14	B4
5	A1	13	Σ3	5	Σ1	15	A4
6	B1	14	A3	6	nc	16	nc
7	C0	15	B3	7	A1	17	Σ3
8	GND	16	V_{CC}	8	B1	18	A3
				9	C0	19	B3
				10	GND	20	V_{CC}

284

4-BIT BY 4-BIT PARALLEL BINARY MULTIPLIERS USED WITH '285

- MSB's for 4 X 4 multiplier ('285 provides LSB's)
- Use 'S274, 'LS275, 'S275 for new designs/larger multipliers

typical performance

TYPE	POWER	TIME*
'284	460 mW	40 ns

SN54284 (J,FH) SN74284 (J,N)

* 8-Bit Product Time

logic symbol†

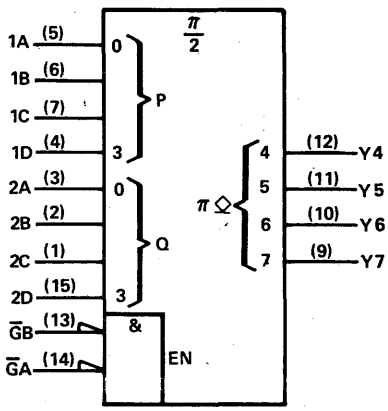

pin assignments

J, N PACKAGES				FH PACKAGE			
1	2C	9	Y7	1	nc	11	nc
2	2B	10	Y6	2	2C	12	Y7
3	2A	11	Y5	3	2B	13	Y6
4	1D	12	Y4	4	2A	14	Y5
5	1A	13	GB	5	1D	15	Y4
6	1B	14	GA	6	nc	16	nc
7	1C	15	2D	7	1A	17	GB
8	GND	16	V_{CC}	8	1B	18	GA
				9	1C	19	2D
				10	GND	20	V_{CC}

285

4-BIT BY 4-BIT PARALLEL BINARY MULTIPLIERS USED WITH '284

- LSB's for 4 X 4 multiplier ('284 provides MSB's)
- Use 'S274, 'LS275, 'S275 for new designs/larger multipliers

typical performance

TYPE	POWER
'285	460 mW

SN54285 (J,FH) SN74285 (J,N)

logic symbol†

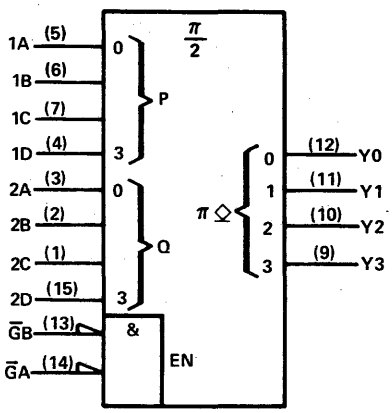

pin assignments

J, N PACKAGES				FH PACKAGE			
1	2C	9	Y3	1	nc	11	nc
2	2B	10	Y2	2	2C	12	Y3
3	2A	11	Y1	3	2B	13	Y2
4	1D	12	Y0	4	2A	14	Y1
5	1A	13	GB	5	1D	15	Y0
6	1B	14	GA	6	nc	16	nc
7	1C	15	2D	7	1A	17	GB
8	GND	16	V_{CC}	8	1B	18	GA
				9	1C	19	2D
				10	GND	20	V_{CC}

† Pin numbers shown on logic symbols are for J and N packages only.
nc — no internal connection.

Copyright © 1983 by Texas Instruments Incorporated.

TEXAS INSTRUMENTS
POST OFFICE BOX 225012 • DALLAS, TEXAS 75265

286

9-BIT PARITY GENERATOR/CHECKER WITH BUS DRIVER PARITY I/O PORT

SN54AS286 (J,FH) SN74AS286 (N,FN)

logic symbol†

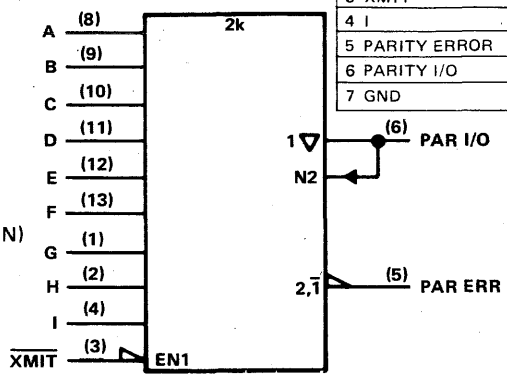

pin assignments

J, N PACKAGE		FH, FN PACKAGE	
1 G	8 A	1 nc	11 nc
2 H	9 B	2 G	12 A
3 $\overline{XM1T}$	10 C	3 H	13 B
4 I	11 D	4 $\overline{XM1T}$	14 C
5 PARITY ERROR	12 E	5 nc	15 nc
6 PARITY I/O	13 F	6 I	16 D
7 GND	14 V_{CC}	7 nc	17 nc
		8 PARITY ERROR	18 E
		9 PARITY I/O	19 F
		10 GND	20 V_{CC}

289

64-BIT RANDOM-ACCESS MEMORIES

(16 4-bit words, open-collector outputs)

typical performance

TYPE	ADDRESS TIME	ENABLE TIME	POWER/ BIT
'LS289A	50 ns	35 ns	2.7 mW
'S289A	25 ns	12 ns	5.9 mW

SN54LS289A (J,FH) SN74LS289A (J,N,FN)
SN54S289A (J,FH) SN74S289A (J,N,FN)

logic symbol†

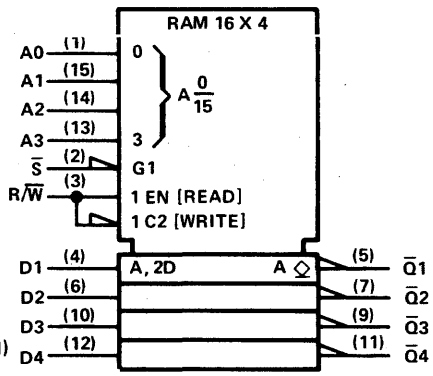

pin assignments

J, N PACKAGES				FH, FN PACKAGES			
1	A0	9	Q̄3	1	nc	11	nc
2	S̄	10	D3	2	A0	12	Q̄3
3	R/W̄	11	Q̄4	3	S̄	13	D3
4	D1	12	D4	4	R/W̄	14	Q̄4
5	Q̄1	13	A3	5	D1	15	D4
6	D2	14	A2	6	nc	16	nc
7	Q̄2	15	A1	7	Q̄1	17	A3
8	GND	16	V_{CC}	8	D2	18	A2
				9	Q̄2	19	A1
				10	GND	20	V_{CC}

290

DECADE COUNTERS

(divide-by-two and divide-by-five)

typical performance

TYPE	COUNT FREQ	CLEAR	TOTAL POWER
'290	32 MHz	HIGH	160 mW
'LS290	32 MHz	HIGH	40 mW

SN54290 (J,FH) SN74290 (J,N)
SN54LS290 (J,FH) SN74LS290 (J,N,FN)

logic symbol†

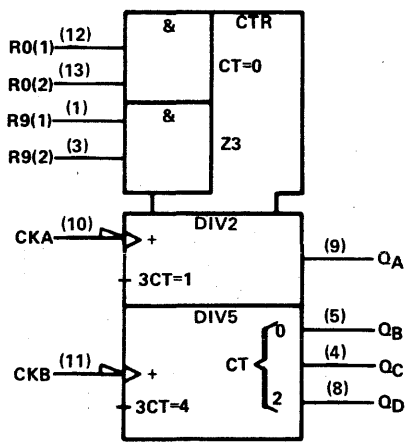

pin assignments

J, N PACKAGES				FH, FN PACKAGES			
1	R9(1)	8	Q_D	1	nc	11	nc
2	nc	9	Q_A	2	R9(1)	12	Q_D
3	R9(2)	10	CKA	3	nc	13	Q_A
4	Q_C	11	CKB	4	R9(2)	14	CKA
5	Q_B	12	R0(1)	5	nc	15	nc
6	nc	13	R0(2)	6	Q_C	16	CKB
7	GND	14	V_{CC}	7	nc	17	nc
				8	Q_B	18	R0(1)
				9	nc	19	R0(2)
				10	GND	20	V_{CC}

†Pin numbers shown on logic symbols are for J and N packages only.
NC—No internal connection

Copyright © 1983 by Texas Instruments Incorporated.

292

PROGRAMMABLE FREQUENCY DIVIDERS/DIGITAL TIMERS
(digitally programmable from 2^2 to 2^{31})

typical performance

TYPE	POWER	f_{max}
'LS292	200 mW	50 MHz

SN54LS292 (J,FH) SN74LS292 (J,N,FN)

logic symbol†

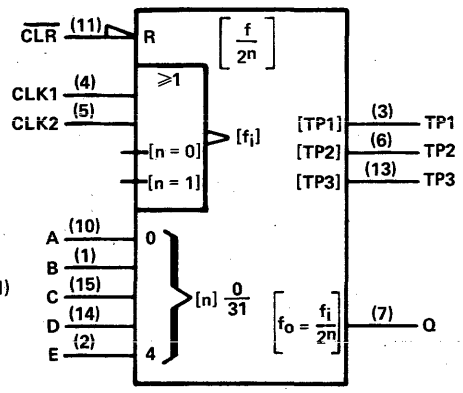

pin assignments

J, N PACKAGES				FH, FN PACKAGES			
1	B	9	nc	1	nc	11	nc
2	E	10	A	2	B	12	nc
3	TP1	11	$\overline{CLR}$	3	E	13	A
4	CLK1	12	nc	4	TP1	14	$\overline{CLR}$
5	CLK2	13	TP3	5	CLK1	15	nc
6	TP2	14	D	6	nc	16	nc
7	Q	15	C	7	CLK2	17	TP3
8	GND	16	V_{CC}	8	TP2	18	D
				9	Q	19	C
				10	GND	20	V_{CC}

† Pin numbers shown on logic symbols are for J and N packages only.
nc — no internal connection.

Copyright © 1983 by Texas Instruments Incorporated.

293

4-BIT BINARY COUNTERS (divide-by-two and divide-by-eight)

typical performance

TYPE	COUNT FREQ	CLEAR	TOTAL POWER
'293	32 MHz	HIGH	160 mW
'LS293	32 MHz	HIGH	39 mW

SN54293 (J,FH) SN74293 (J,N)
SN54LS293 (J,FH) SN74LS293 (J,N,FN)

logic symbol†

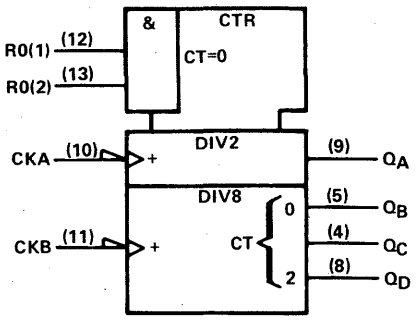

pin assignments

J, N PACKAGES				FH, FN PACKAGES			
1	nc	8	Q_D	1	nc	11	nc
2	nc	9	Q_A	2	nc	12	Q_D
3	nc	10	CKA	3	nc	13	Q_A
4	Q_C	11	CKB	4	nc	14	CKA
5	Q_B	12	R0(1)	5	nc	15	nc
6	nc	13	R0(2)	6	Q_C	16	CKB
7	GND	14	V_{CC}	7	nc	17	nc
				8	Q_B	18	R0(1)
				9	nc	19	R0(2)
				10	GND	20	V_{CC}

294

PROGRAMMABLE FREQUENCY DIVIDERS/DIGITAL TIMERS (digitally programmable from 2^2 to 2^{15})

typical performance

TYPE	POWER	f_{max}
'LS294	150 mW	50 MHz

SN54LS294 (J,FH) SN74LS294 (J,N,FN)

logic symbol†

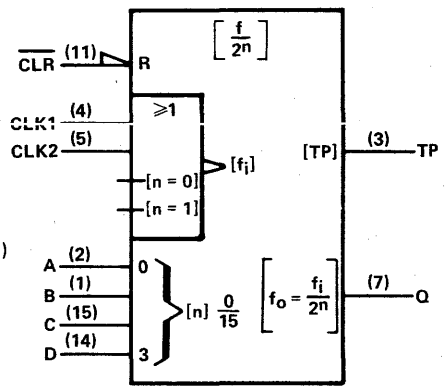

pin assignments

J, N PACKAGES				FH, FN PACKAGES			
1	B	9	nc	1	nc	11	nc
2	A	10	nc	2	B	12	nc
3	TP	11	$\overline{CLR}$	3	A	13	nc
4	CLK1	12	nc	4	TP	14	$\overline{CLR}$
5	CLK2	13	nc	5	CLK1	15	nc
6	nc	14	D	6	nc	16	nc
7	Q	15	C	7	CLK2	17	nc
8	GND	16	V_{CC}	8	nc	18	D
				9	Q	19	C
				10	GND	20	V_{CC}

295

4-BIT BIDIRECTIONAL UNIVERSAL SHIFT REGISTERS

typical performance

TYPE	SHIFT FREQ	SERIAL DATA INPUT	TOTAL POWER
'LS295B	30 MHz	D	70 mW

SN54LS295B (J,FH) SN74LS295B (J,N,FN)

logic symbol†

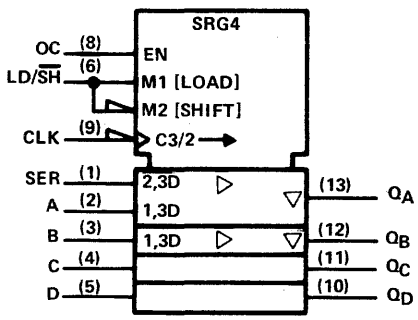

pin assignments

J, N PACKAGES				FH, FN PACKAGES			
1	SER	8	OC	1	nc	11	nc
2	A	9	CLK	2	SER	12	OC
3	B	10	Q_D	3	A	13	CLK
4	C	11	Q_C	4	B	14	Q_D
5	D	12	Q_B	5	nc	15	nc
6	LD/$\overline{SH}$	13	Q_A	6	C	16	Q_C
7	GND	14	V_{CC}	7	nc	17	nc
				8	D	18	Q_B
				9	LD/$\overline{SH}$	19	Q_A
				10	GND	20	V_{CC}

† Pin numbers shown on logic symbols are for J and N packages only.
nc — no internal connection.

Copyright © 1983 by Texas Instruments Incorporated.

297

DIGITAL PHASE-LOCKED-LOOP FILTERS
(cascadable for higher-order loops)

typical performance

TYPE	POWER	f_{max} KCLK	f_{max} I/DCLK	DELAY (FROM I/DCLK)
'LS297	375 mW	50 MHz	35 MHz	18.5 ns

SN54LS297 (J,FH) SN74LS297 (J,N,FN)

pin assignments

J, N PACKAGES				FH, FN PACKAGES			
1	B	9	ϕA1	1	nc	11	nc
2	A	10	ϕB	2	B	12	ϕA1
3	ENCTR	11	XOPRD	3	A	13	ϕB
4	K CLK	12	ECPD	4	ENCTR	14	XOPRD
5	I/D CLK	13	ϕA2	5	K CLK	15	ECPD
6	D/$\overline{U}$	14	D	6	nc	16	nc
7	I/D OUT	15	C	7	I/D CLK	17	ϕA2
8	GND	16	V_{CC}	8	D/$\overline{U}$	18	D
				9	I/D OUT	19	C
				10	GND	20	V_{CC}

simplified block diagram†

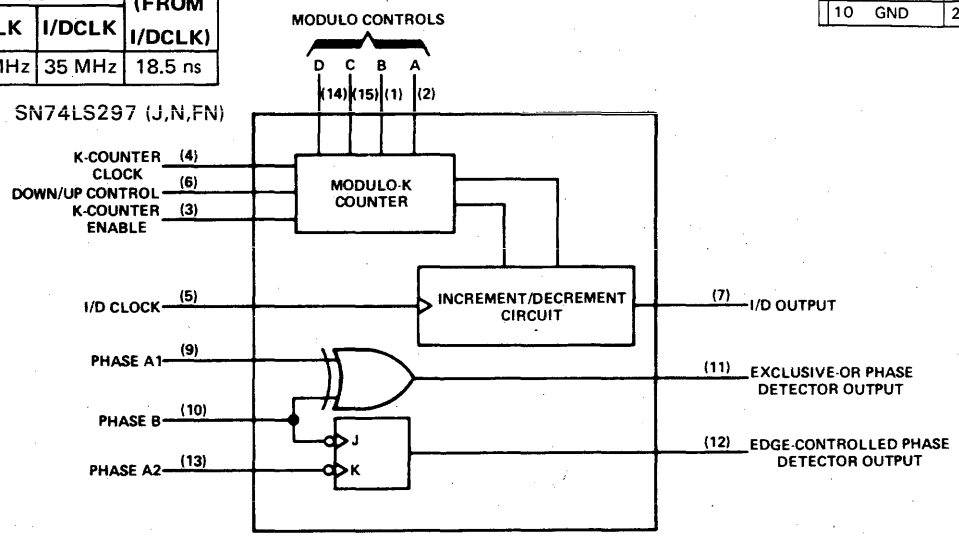

298

QUAD 2-INPUT MULTIPLEXERS WITH STORAGE

typical performance

TYPE	POWER	DELAY*
'298	195 mW	20 ns
'AS298		7.1 ns
'LS298	65 mW	20 ns

* From clock to non-inverted output

SN54298 (J,FH) SN74298 (J,N)
SN54AS298 (J,FH) SN74AS298 (N,FN)
SN54LS298 (J,FH) SN74LS298 (J,N,FN)

logic symbol†

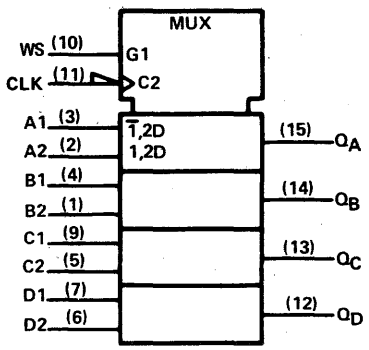

pin assignments

J, N PACKAGES				FH, FN PACKAGES			
1	B2	9	C1	1	nc	11	nc
2	A2	10	WS	2	B2	12	C1
3	A1	11	CLK	3	A2	13	WS
4	B1	12	Q_D	4	A1	14	CLK
5	C2	13	Q_C	5	B1	15	Q_D
6	D2	14	Q_B	6	nc	16	nc
7	D1	15	Q_A	7	C2	17	Q_C
8	GND	16	V_{CC}	8	D2	18	Q_B
				9	D1	19	Q_A
				10	GND	20	V_{CC}

† Pin numbers shown on logic symbols are for J and N packages only.
nc — no internal connection.

Copyright © 1983 by Texas Instruments Incorporated.

299

8-BIT BIDIRECTIONAL UNIVERSAL SHIFT/STORAGE REGISTERS

(three-state outputs)

typical performance

TYPE	SHIFT FREQ	SERIAL DATA INPUT	ASYNC CLEAR	TOTAL POWER
'ALS299	30 MHz	D	LOW	100 mW
'AS299				
'LS299	35 MHz	D	LOW	175 mW
'S299	50 MHz	D	LOW	750 mW

SN54ALS299 (J,FH) SN74ALS299 (N,FN)
SN54AS299 (J,FH) SN74AS299 (N,FN)
SN54LS299 (J,FH) SN74LS299 (J,N,FN)
SN54S299 (J,FH) SN74S299 (J,N,FN)

logic symbol†

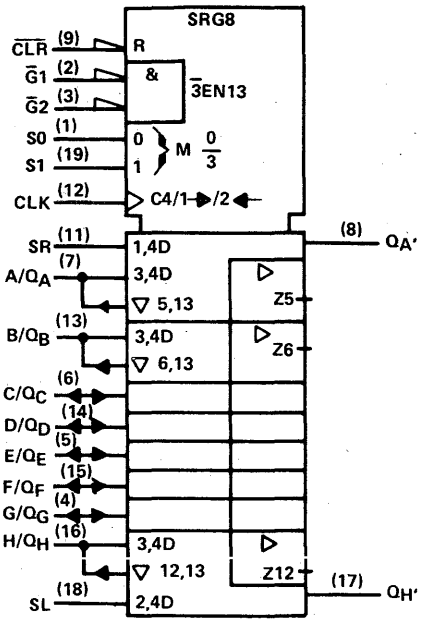

pin assignments

J, N PACKAGES			
1	S0	11	SR
2	$\overline{G}1$	12	CLK
3	$\overline{G}2$	13	B/Q_B
4	G/Q_G	14	D/Q_D
5	E/Q_E	15	F/Q_F
6	C/Q_C	16	H/Q_H
7	A/Q_A	17	$Q_{H'}$
8	$Q_{A'}$	18	SL
9	$\overline{CLR}$	19	S1
10	GND	20	V_{CC}

FH, FN PACKAGES			
1	S0	11	SR
2	$\overline{G}1$	12	CLK
3	$\overline{G}2$	13	B/Q_B
4	G/Q_G	14	D/Q_D
5	E/Q_E	15	F/Q_F
6	C/Q_C	16	H/Q_H
7	A/Q_A	17	$Q_{H'}$
8	$Q_{A'}$	18	SL
9	$\overline{CLR}$	19	S1
10	GND	20	V_{CC}

301

256-BIT RANDOM-ACCESS MEMORIES

(256 1-bit words, open-collector output)

typical performance

TYPE	ADDRESS TIME	ENABLE TIME	POWER/ BIT
'S301	42 ns	13 ns	1.9 mW

SN74S301 (J,N)

logic symbol†

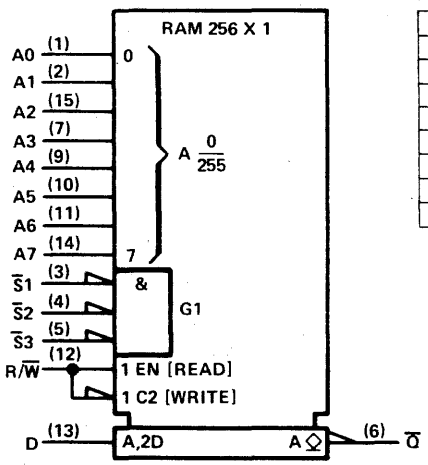

pin assignments

J, N PACKAGES			
1	A0	9	A4
2	A1	10	A5
3	$\overline{S}1$	11	A6
4	$\overline{S}2$	12	$R/\overline{W}$
5	$\overline{S}3$	13	D
6	$\overline{Q}$	14	A7
7	A3	15	A2
8	GND	16	V_{CC}

† Pin numbers shown on logic symbols are for J and N packages only.
nc — no internal connection.

Copyright © 1983 by Texas Instruments Incorporated.

319

64-BIT RANDOM ACCESS MEMORIES
(16-four bit words, open-collector outputs)

typical performance

TYPE	ADDRESS TIME	ENABLE TIME	POWER/ BIT
'LS319A	50 ns	35 ns	2.7 mW

SN54LS319A (J,FH) SN74LS319A (J,N,FN)

logic symbol†

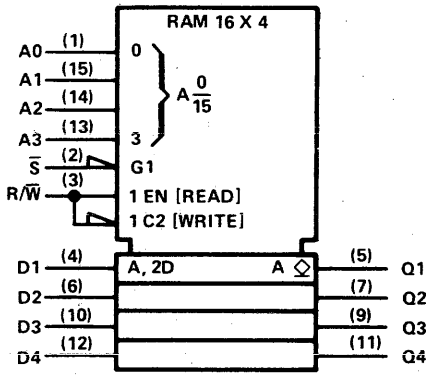

pin assignments

J, N PACKAGES				FH, FN PACKAGES			
1	A0	9	Q3	1	nc	11	nc
2	S̄	10	D3	2	A0	12	Q3
3	R/W̄	11	Q4	3	S̄	13	D3
4	D1	12	D4	4	R/W̄	14	Q4
5	Q1	13	A3	5	D1	15	D4
6	D2	14	A2	6	nc	16	nc
7	Q2	15	A1	7	Q1	17	A3
8	GND	16	V_{CC}	8	D2	18	A2
				9	Q2	19	A1
				10	GND	20	V_{CC}

320

CRYSTAL-CONTROLLED OSCILLATORS

typical performance

TYPE	f_{max}	POWER
'LS320	30 MHz	210 mW

SN54LS320 (J) SN74LS320 (J,N)

logic symbol†

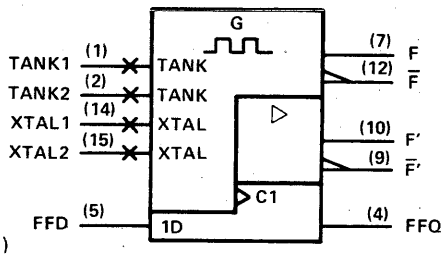

pin assignments

J, N PACKAGES				FH, FN PACKAGES			
1	TANK1	9	F̄'	1	nc	11	nc
2	TANK2	10	F'	2	TANK1	12	F̄'
3	GND1	11	$V_{CC'}$	3	TANK2	13	F'
4	FFQ	12	F̄	4	GND1	14	$V_{CC'}$
5	FFD	13	nc	5	FFQ	15	F̄
6	nc	14	XTAL1	6	nc	16	nc
7	F	15	XTAL2	7	FFD	17	nc
8	GND2	16	V_{CC}	8	nc	18	XTAL1
				9	F	19	XTAL2
				10	GND2	20	V_{CC}

321

CRYSTAL-CONTROLLED OSCILLATORS
(with F/2 and F/4 count-down outputs)

typical performance

TYPE	FREQ	POWER
'LS321	30 MHz	235 mW

SN54LS321 (J) SN74LS321 (J,N)

logic symbol†

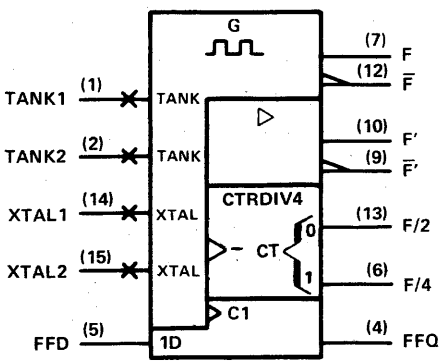

pin assignments

J, N PACKAGES				FH, FN PACKAGES			
1	TANK1	9	F̄'	1	nc	11	nc
2	TANK2	10	F'	2	TANK1	12	F̄'
3	GND1	11	$V_{CC'}$	3	TANK2	13	F'
4	FFQ	12	F̄	4	GND1	14	$V_{CC'}$
5	FFD	13	F/2	5	FFQ	15	F̄
6	F/4	14	XTAL1	6	nc	16	nc
7	F	15	XTAL2	7	FFD	17	F/2
8	GND2	16	V_{CC}	8	F/4	18	XTAL1
				9	F	19	XTAL2
				10	GND2	20	V_{CC}

† Pin numbers shown on logic symbols are for J and N packages only.
nc — no internal connection.

Copyright © 1983 by Texas Instruments Incorporated.

322

8-BIT SHIFT REGISTERS WITH SIGN EXTEND
(three-state outputs, multiplexed I/O)

typical performance

TYPE	SHIFT FREQ	SERIAL DATA INPUT	ASYNC CLEAR	POWER
'LS322A	35 MHz	D	LOW	175 mW

SN54LS322A (J,FH) SN74LS322A (J,N,FN)

logic symbol†

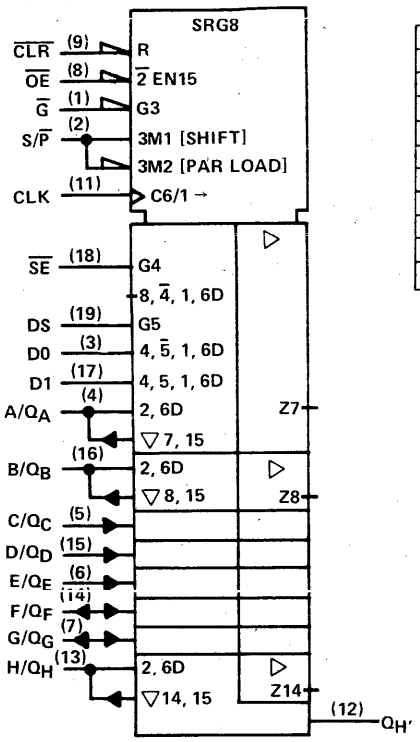

pin assignments

J, N PACKAGES				FH, FN PACKAGES			
1	$\overline{G}$	11	CLK	1	$\overline{G}$	11	CLK
2	S/$\overline{P}$	12	$Q_{H'}$	2	S/$\overline{P}$	12	$Q_{H'}$
3	D0	13	H/Q_H	3	D0	13	H/Q_H
4	A/Q_A	14	F/Q_F	4	A/Q_A	14	F/Q_F
5	C/Q_C	15	D/Q_D	5	C/Q_C	15	D/Q_D
6	E/Q_E	16	B/Q_B	6	E/Q_E	16	B/Q_B
7	G/Q_G	17	D1	7	G/Q_G	17	D1
8	$\overline{OE}$	18	$\overline{SE}$	8	$\overline{OE}$	18	$\overline{SE}$
9	$\overline{CLR}$	19	DS	9	$\overline{CLR}$	19	DS
10	GND	20	V_{CC}	10	GND	20	V_{CC}

323

8-BIT BIDIRECTIONAL SHIFT/STORAGE REGISTERS
(three-state outputs)

typical performance

TYPE	SHIFT FREQ	SERIAL DATA INPUT	POWER
'ALS323	30 MHz	D	100 mW
'AS323			
'LS323	35 MHz	D	175 mW

SN54ALS323 (J,FH) SN74ALS323 (N,FN)
SN54AS323 (J,FH) SN74AS323 (N,FN)
SN54LS323 (J,FH) SN74LS323 (J,N,FN)

logic symbol†

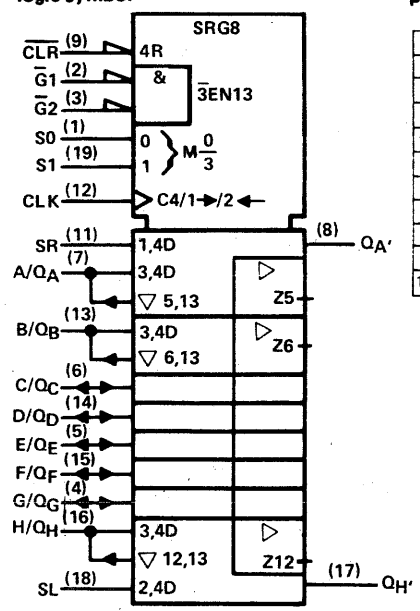

pin assignments

J, N PACKAGES				FH, FN PACKAGES			
1	S0	11	SR	1	S0	11	SR
2	$\overline{G}$1	12	CLK	2	$\overline{G}$1	12	CLK
3	$\overline{G}$2	13	B/Q_B	3	$\overline{G}$2	13	B/Q_B
4	G/Q_G	14	D/Q_D	4	G/Q_G	14	D/Q_D
5	E/Q_E	15	F/Q_F	5	E/Q_E	15	F/Q_F
6	C/Q_C	16	H/Q_H	6	C/Q_C	16	H/Q_H
7	A/Q_A	17	$Q_{H'}$	7	A/Q_A	17	$Q_{H'}$
8	$Q_{A'}$	18	SL	8	$Q_{A'}$	18	SL
9	$\overline{CLR}$	19	S1	9	$\overline{CLR}$	19	S1
10	GND	20	V_{CC}	10	GND	20	V_{CC}

† Pin numbers shown on logic symbols are for J and N packages only.
nc — no internal connection.

Copyright © 1983 by Texas Instruments Incorporated.

347

BCD-TO-SEVEN-SEGMENT DECODERS/DRIVERS

(open-collector outputs, low-voltage version of 'LS47)

typical performance

TYPE	OUTPUT SINK CURRENT	OFF-STATE OUTPUT VOLTAGE	POWER
SN54LS347	12 mA	7 V	35 mW
SN74LS347	24 mA	7 V	35 mW

SN54LS347 (J,FH) SN74LS347 (J,N, FN)

logic symbol†

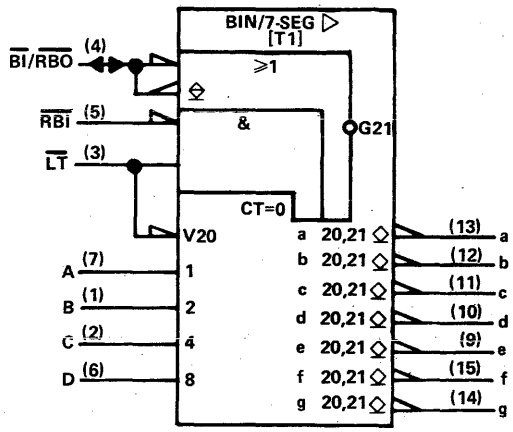

pin assignments

J, N PACKAGES			
1	B	9	e
2	C	10	d
3	$\overline{LT}$	11	c
4	$\overline{BI}/\overline{RBO}$	12	b
5	$\overline{RBI}$	13	a
6	D	14	g
7	A	15	f
8	GND	16	V_{CC}

FH, FN PACKAGES			
1	nc	11	nc
2	B	12	e
3	C	13	d
4	$\overline{LT}$	14	c
5	$\overline{BI}/\overline{RBO}$	15	b
6	nc	16	nc
7	$\overline{RBI}$	17	a
8	D	18	g
9	A	19	f
10	GND	20	V_{CC}

348

8-LINE TO 3-LINE PRIORITY ENCODERS

(with three-state outputs)

typical performance

TYPE	DELAY	POWER
'LS348	16 ns	63 mW

SN54LS348 (J,FH) SN74LS348 (J,N,FN)

logic symbol†

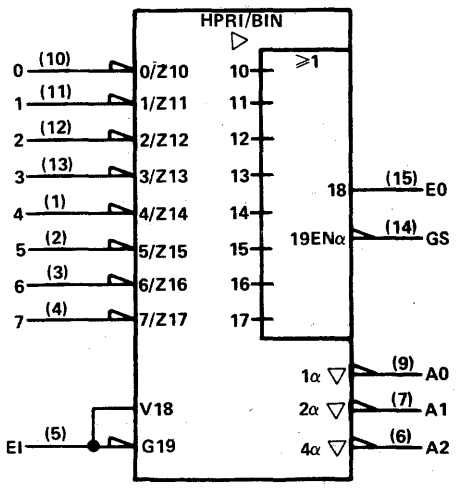

pin assignments

J, N PACKAGES			
1	4	9	A0
2	5	10	0
3	6	11	1
4	7	12	2
5	E1	13	3
6	A2	14	GS
7	A1	15	E0
8	GND	16	V_{CC}

FH, FN PACKAGES			
1	nc	11	nc
2	4	12	A0
3	5	13	0
4	6	14	1
5	7	15	2
6	nc	16	nc
7	E1	17	3
8	A2	18	GS
9	A1	19	E0
10	GND	20	V_{CC}

† Pin numbers shown on logic symbols are for J and N packages only.
nc — no internal connection.

FONT TABLE T1 — NUMERICAL DESIGNATIONS AND RESULTANT DISPLAYS USING 'LS347

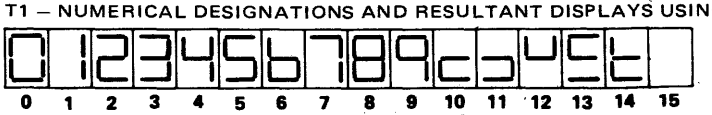

Copyright © 1983 by Texas Instruments Incorporated.

TEXAS INSTRUMENTS
POST OFFICE BOX 225012 • DALLAS, TEXAS 75265

351

DUAL 8-LINE TO 1-LINE DATA SELECTORS/MULTIPLEXERS
(three-state outputs; four common data inputs)

typical performance

TYPE	DELAY TIMES		TOTAL POWER
	DATA TO INV OUTPUT	FROM ENABLE	
'351	10 ns	17 ns	220 mW

SN74351 (J,N)

logic symbol†

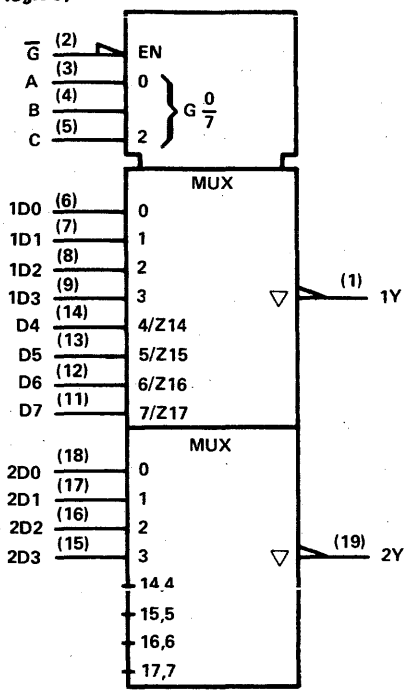

pin assignments

J, N PACKAGES			
1	1Y	11	D7
2	$\overline{G}$	12	D6
3	A	13	D5
4	B	14	D4
5	C	15	2D3
6	1D0	16	2D2
7	1D1	17	2D1
8	1D2	18	2D0
9	1D3	19	2Y
10	GND	20	V_{CC}

352

DUAL 4-LINE TO 1-LINE DATA SELECTORS/MULTIPLEXERS
(inverting version of 'LS153)

typical performance

TYPE	DELAY TIMES		TOTAL POWER
	DATA TO INV OUTPUT	FROM ENABLE	
'ALS352	6 ns	4.5 ns	32.5 mW
'AS352	2.7 ns	4.5 ns	122.5 mW
'LS352	15 ns	18.5 ns	31 mW

SN54ALS352 (J,FH) SN74ALS352 (N,FN)
SN54AS352 (J,FH) SN74AS352 (N,FN)
SN54LS352 (J,FH) SN74LS352 (J,N,FN)

logic symbol†

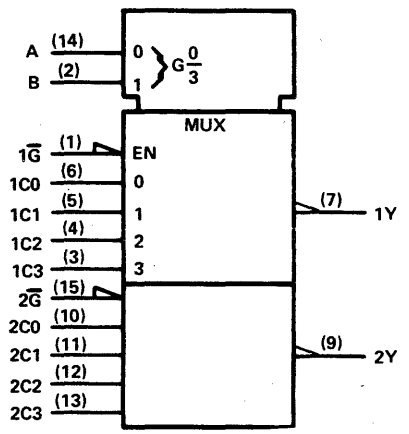

pin assignments

J, N PACKAGES				FH, FN PACKAGES			
1	$1\overline{G}$	9	2Y	1	nc	11	nc
2	B	10	2C0	2	$1\overline{G}$	12	2Y
3	1C3	11	2C1	3	B	13	2C0
4	1C2	12	2C2	4	1C3	14	2C1
5	1C1	13	2C3	5	1C2	15	2C2
6	1C0	14	A	6	nc	16	nc
7	1Y	15	$2\overline{G}$	7	1C1	17	2C3
8	GND	16	V_{CC}	8	1C0	18	A
				9	1Y	19	$2\overline{G}$
				10	GND	20	V_{CC}

† Pin numbers shown on logic symbols are for J and N packages only.
nc — no internal connection.

Copyright © 1983 by Texas Instruments Incorporated.

353

DUAL 4-LINE TO 1-LINE DATA SELECTORS/MULTIPLEXERS
(three-state outputs, inverting version of 'LS253

typical performance

TYPE	DELAY TIMES		TOTAL POWER
	DATA TO INV OUTPUT	FROM ENABLE	
'ALS353	6 ns	4.5 ns	40 mW
'AS353	2.7 ns	5.5 ns	130 mW
'LS353	12 ns	13 ns	43 mW

SN54ALS353 (J,FH) SN74ALS353 (N,FN)
SN54AS353 (J,FH) SN74AS353 (N,FN)
SN54LS353 (J,FH) SN74LS353 (J,N,FN)

logic symbol†

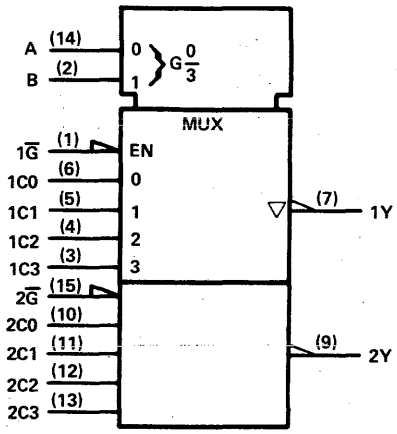

pin assignments

J, N PACKAGES				FH, FN PACKAGES			
1	1G̅	9	2Y	1	nc	11	nc
2	B	10	2C0	2	1G̅	12	2Y
3	1C3	11	2C1	3	B	13	2C0
4	1C2	12	2C2	4	1C3	14	2C1
5	1C1	13	2C3	5	1C2	15	2C2
6	1C0	14	A	6	nc	16	nc
7	1Y	15	2G̅	7	1C1	17	2C3
8	GND	16	V_{CC}	8	1C0	18	A
				9	1Y	19	2G̅
				10	GND	20	V_{CC}

354

8-LINE TO 1-LINE DATA SELECTORS/MULTIPLEXERS/ TRANSPARENT REGISTERS
(three-state outputs)

typical performance

TYPE	DELAY TIMES		
	DATA TO INV OUTPUT	DATA TO NON-INV OUTPUT	FROM ENABLE
'LS354	23.5 ns	23.5 ns	16 ns

SN54LS354 (J,FH) SN74LS354 (J,N,FN)

logic symbol†

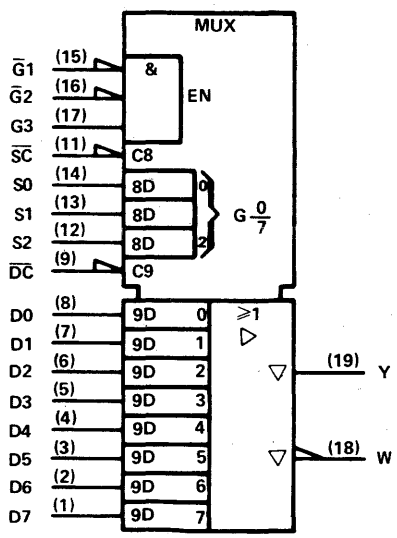

pin assignments

J, N PACKAGES				FH, FN PACKAGES			
1	D7	11	S̅C̅	1	D7	11	S̅C̅
2	D6	12	S2	2	D6	12	S2
3	D5	13	S1	3	D5	13	S1
4	D4	14	S0	4	D4	14	S0
5	D3	15	G̅1	5	D3	15	G̅1
6	D2	16	G̅2	6	D2	16	G̅2
7	D1	17	G3	7	D1	17	G3
8	D0	18	W	8	D0	18	W
9	D̅C̅	19	Y	9	D̅C̅	19	Y
10	GND	20	V_{CC}	10	GND	20	V_{CC}

† Pin numbers shown on logic symbols are for J and N packages only.
nc — no internal connection.

Copyright © 1983 by Texas Instruments Incorporated.

TEXAS INSTRUMENTS
POST OFFICE BOX 225012 • DALLAS, TEXAS 75265

355

8-LINE TO 1-LINE DATA SELECTORS/MULTIPLEXERS/ TRANSPARENT REGISTERS
(open-collector outputs)

typical performance

DELAY TIMES		
DATA TO INV OUTPUT	DATA TO NON-INV OUTPUT	FROM ENABLE
31.5 ns	30 ns	21.5 ns

SN54LS355 (J,FH) SN74LS355 (J,N,FN)

logic symbol†

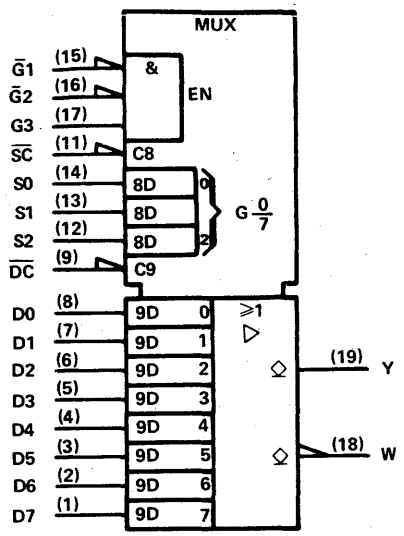

pin assignments

J, N PACKAGES				FH, FN PACKAGES			
1	D7	11	$\overline{SC}$	1	D7	11	$\overline{SC}$
2	D6	12	S2	2	D6	12	S2
3	D5	13	S1	3	D5	13	S1
4	D4	14	S0	4	D4	14	S0
5	D3	15	$\overline{G1}$	5	D3	15	$\overline{G1}$
6	D2	16	$\overline{G2}$	6	D2	16	$\overline{G2}$
7	D1	17	G3	7	D1	17	G3
8	D0	18	W	8	D0	18	W
9	$\overline{DC}$	19	Y	9	$\overline{DC}$	19	Y
10	GND	20	V_{CC}	10	GND	20	V_{CC}

356

8-LINE TO 1-LINE DATA SELECTORS/MULTIPLEXERS/ EDGE-TRIGGERED REGISTERS
(three-state output)

typical performance

DELAY TIMES		
DATA TO INV OUTPUT	DATA TO NON-INV OUTPUT	FROM ENABLE
23.5 ns	23.5 ns	16 ns

SN54LS356 (J,FH) SN74LS356 (J,N,FN)

logic symbol†

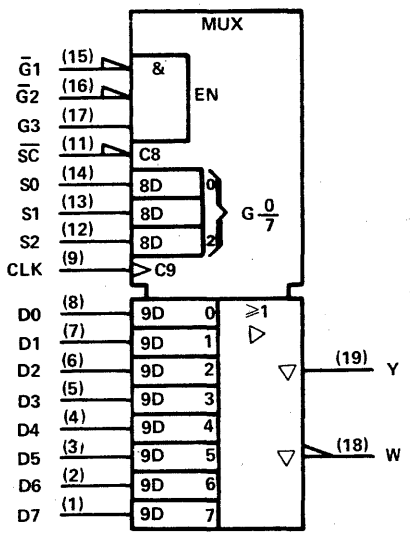

pin assignments

J, N PACKAGES				FH, FN PACKAGES			
1	D7	11	$\overline{SC}$	1	D7	11	$\overline{SC}$
2	D6	12	S2	2	D6	12	S2
3	D5	13	S1	3	D5	13	S1
4	D4	14	S0	4	D4	14	S0
5	D3	15	$\overline{G1}$	5	D3	15	$\overline{G1}$
6	D2	16	$\overline{G2}$	6	D2	16	$\overline{G2}$
7	D1	17	G3	7	D1	17	G3
8	D0	18	W	8	D0	18	W
9	CLK	19	Y	9	CLK	19	Y
10	GND	20	V_{CC}	10	GND	20	V_{CC}

† Pin numbers shown on logic symbols are for J and N packages only.
nc — no internal connection.

Copyright © 1983 by Texas Instruments Incorporated.

357

8-LINE TO 1-LINE DATA SELECTORS/MULTIPLEXERS/ EDGE-TRIGGERED REGISTERS

(open-collector outputs)

typical performance

DELAY TIMES		
DATA TO INV OUTPUT	DATA TO NON-INV OUTPUT	FROM ENABLE
31.5 ns	30 ns	25 ns

SN54LS357 (J,FH) SN74LS357 (J,N,FN)

logic symbol†

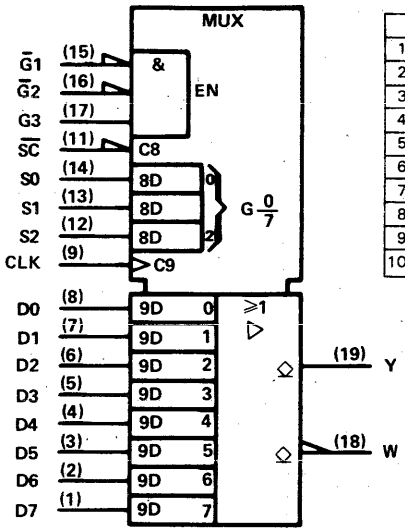

pin assignments

J, N PACKAGES				FH, FN PACKAGES			
1	D7	11	$\overline{SC}$	1	D7	11	$\overline{SC}$
2	D6	12	S2	2	D6	12	S2
3	D5	13	S1	3	D5	13	S1
4	D4	14	S0	4	D4	14	S0
5	D3	15	$\overline{G1}$	5	D3	15	$\overline{G1}$
6	D2	16	$\overline{G2}$	6	D2	16	$\overline{G2}$
7	D1	17	G3	7	D1	17	G3
8	D0	18	W	8	D0	18	W
9	CLK	19	Y	9	CLK	19	Y
10	GND	20	V_{CC}	10	GND	20	V_{CC}

365

HEX BUS DRIVERS

(non-inverted three-state outputs, gated enable inputs)

typical performance

TYPE	DELAY	MAX SOURCE CURRENT	MAX SINK CURRENT	POWER DISSIPATION
SN54365A	12 ns	−2 mA	32 mA	325 mW
SN74365A	12 ns	−5.2 mA	32 mA	325 mW
SN54ALS365	7 ns	−12 mA	12 mA	53 mW
SN74ALS365	7 ns	−15 mA	24 mA	53 mW
SN74ALS365-1	7 ns	−15 mA	48 mA	53 mW
SN54LS365A	9.5 ns	−1 mA	12 mA	70 mW
SN74LS365A	9.5 ns	−2.6 mA	24 mA	70 mW

SN54365A (J,FH) SN74365A (J,N) SN74ALS365-1 (N,FN)
SN54ALS365 (J,FH) SN74ALS365 (N,FN) **SN54LS365A** (J,FH) SN74LS365A (J,N,FN)

logic symbol†

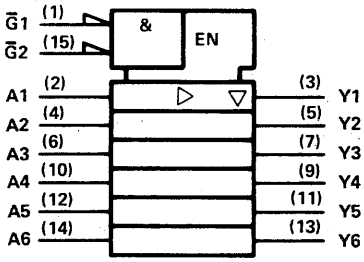

pin assignments

J, N PACKAGES				FH, FN PACKAGES			
1	$\overline{G1}$	9	Y4	1	nc	11	nc
2	A1	10	A4	2	$\overline{G1}$	12	Y4
3	Y1	11	Y5	3	A1	13	A4
4	A2	12	A5	4	Y1	14	Y5
5	Y2	13	Y6	5	A2	15	A5
6	A3	14	A6	6	nc	16	nc
7	Y3	15	$\overline{G2}$	7	Y2	17	Y6
8	GND	16	V_{CC}	8	A3	18	A6
				9	Y3	19	$\overline{G2}$
				10	GND	20	V_{CC}

366

HEX BUS DRIVERS

(inverted three-state outputs, gated enable inputs)

typical performance

TYPE	DELAY	MAX SOURCE CURRENT	MAX SINK CURRENT	POWER DISSIPATION
SN54ALS366	5.5 ns	−12 mA	12 mA	40 mW
SN74ALS366	5.5 ns	−15 mA	24 mA	40 mW
SN74ALS366-1	5.5 ns	−15 mA	48 mA	40 mW
SN54366A	11 ns	−2 mA	32 mA	295 mW
SN74366A	11 ns	−5.2 mA	32 mA	295 mW
SN54LS366A	9.5 ns	−1 mA	12 mA	60 mW
SN74LS366A	9.5 ns	−2.6 mA	24 mA	60 mW

SN54366A (J,FH) SN74366A (J,N) SN74ALS366-1 (N,FN)
SN54ALS366 (J,FC) SN74ALS366 (N,FN) SN54LS366A (J,FH) SN74LS366A (J,N,FN)

logic symbol†

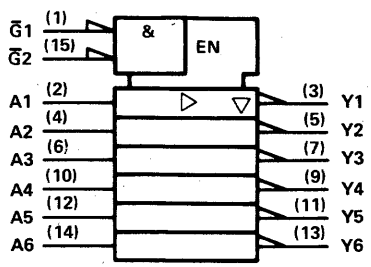

pin assignments

J, N PACKAGES				FH, FN PACKAGES			
1	$\overline{G1}$	9	Y4	1	nc	11	nc
2	A1	10	A4	2	$\overline{G1}$	12	Y4
3	Y1	11	Y5	3	A1	13	A4
4	A2	12	A5	4	Y1	14	Y5
5	Y2	13	Y6	5	A2	15	A5
6	A3	14	A6	6	nc	16	nc
7	Y3	15	$\overline{G2}$	7	Y2	17	Y6
8	GND	16	V_{CC}	8	A3	18	A6
				9	Y3	19	$\overline{G2}$
				10	GND	20	V_{CC}

nc — no internal connection.

†Pin numbers shown on logic symbols are for J and N packages only.

Copyright © 1983 by Texas Instruments Incorporated.

TEXAS INSTRUMENTS
POST OFFICE BOX 225012 • DALLAS, TEXAS 75265

367

HEX BUS DRIVERS

(non-inverted three-state outputs organized to facilitate handling of 4-bit data)

typical performance

TYPE	DELAY	MAX SOURCE CURRENT	MAX SINK CURRENT	POWER DISSIPATION
SN54ALS367	7 ns	−12 mA	12 mA	53 mW
SN74ALS367	7 ns	−15 mA	24 mA	53 mW
SN74ALS367-1	7 ns	−15 mA	48 mA	53 mW
SN54367A	12 ns	−2 mA	32 mA	325 mW
SN74367A	12 ns	−5.2 mA	32 mA	325 mW
SN54LS367A	9.5 ns	−1 mA	12 mA	70 mW
SN74LS367A	9.5 ns	−2.6 mA	24 mA	70 mW

SN54367A (J,FH) SN74367A (J,N)
SN54ALS367 (J,FH) SN74ALS367 (N,FN)
SN74ALS367-1 (N,FN)
SN54LS367A (J,FH) SN74LS367A (J,N,FN)

logic symbol†

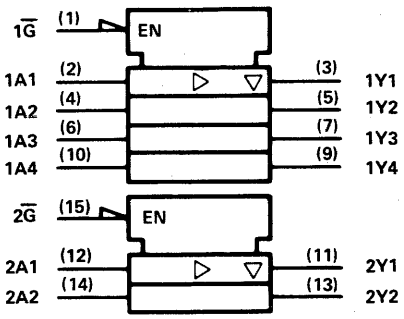

pin assignments

J, N PACKAGES				FH, FN PACKAGES			
1	1G̅	9	1Y4	1	nc	11	nc
2	1A1	10	1A4	2	1G̅	12	1Y4
3	1Y1	11	2Y1	3	1A1	13	1A4
4	1A2	12	2A1	4	1Y1	14	2Y1
5	1Y2	13	2Y2	5	1A2	15	2A1
6	1A3	14	2A2	6	nc	16	nc
7	1Y3	15	2G̅	7	1Y2	17	2Y2
8	GND	16	V_{CC}	8	1A3	18	2A2
				9	1Y3	19	2G̅
				10	GND	20	V_{CC}

368

HEX BUS DRIVERS

(inverted three-state outputs organized to facilitate handling of 4-bit data)

typical performance

TYPE	DELAY	MAX SOURCE CURRENT	MAX SINK CURRENT	POWER DISSIPATION
SN54ALS368	5.5 ns	−12 mA	12 mA	40 mW
SN74ALS368	5.5 ns	−15 mA	24 mA	40 mW
SN74ALS368-1	5.5 ns	−15 mA	48 mA	40 mW
SN54368A	11 ns	−2 mA	32 mA	295 mW
SN74368A	11 ns	−5.2 mA	32 mA	295 mW
SN54LS368A	9.5 ns	−1 mA	12 mA	60 mW
SN74LS368A	9.5 ns	−2.6 mA	24 mA	60 mW

SN54368A (J,FH) SN74368A (J,N)
SN54ALS368 (J,FH) SN74ALS368 (N,FN)
SN74ALS368-1 (N,FN)
SN54LS368A (J,FH) SN74LS368A (J,N,FN)

logic symbol†

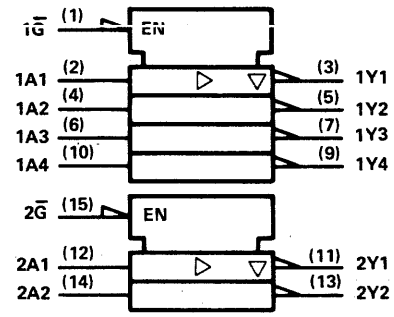

pin assignments

J, N PACKAGES				FH, FN PACKAGES			
1	1G̅	9	1Y4	1	nc	11	nc
2	1A1	10	1A4	2	1G̅	12	1Y4
3	1Y1	11	2Y1	3	1A1	13	1A4
4	1A2	12	2A1	4	1Y1	14	2Y1
5	1Y2	13	2Y2	5	1A2	15	2A1
6	1A3	14	2A2	6	nc	16	nc
7	1Y3	15	2G̅	7	1Y2	17	2Y2
8	GND	16	V_{CC}	8	1A3	18	2A2
				9	1Y3	19	2G̅
				10	GND	20	V_{CC}

370

2048-BIT READ-ONLY MEMORIES

(512 4-bit words; three-state outputs)

typical performance

TYPE	ADDRESS TIME	ENABLE TIME	POWER/ BIT
'S370	45 ns	15 ns	0.26 mW

SN54S370 (J) SN74S370 (J,N)

logic symbol†

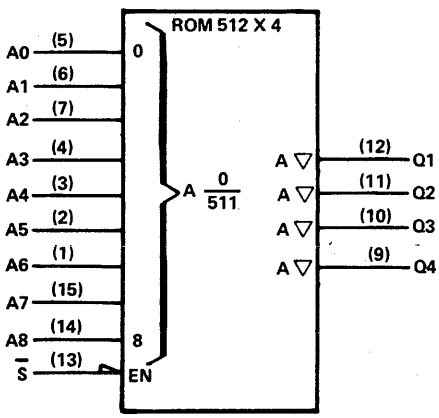

pin assignments

J, N PACKAGES			
1	A6	9	Q4
2	A5	10	Q3
3	A4	11	Q2
4	A3	12	Q1
5	A0	13	S̅
6	A1	14	A8
7	A2	15	A7
8	GND	16	V_{CC}

For chip carrier information, contact the factory.

This product is no longer in production

† Pin numbers shown on logic symbols are for J and N packages only.
nc — no internal connection.

Copyright © 1983 by Texas Instruments Incorporated.

371

2048-BIT READ-ONLY MEMORIES
(256 8-bit words; three-state outputs)

typical performance

TYPE	ADDRESS TIME	ENABLE TIME	POWER/ BIT
'S371	45 ns	15 ns	0.26 mW

SN54S371 (J,FH) SN74S371 (J,N,FN)

This product is no longer in production

logic symbol†

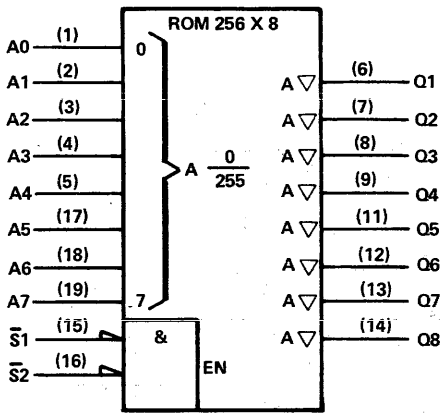

pin assignments

J, N PACKAGES				FH, FN PACKAGES			
1	A0	11	Q5	1	A0	11	Q5
2	A1	12	Q6	2	A1	12	Q6
3	A2	13	Q7	3	A2	13	Q7
4	A3	14	Q8	4	A3	14	Q8
5	A4	15	S̄1	5	A4	15	S̄1
6	Q1	16	S̄2	6	Q1	16	S̄2
7	Q2	17	A5	7	Q2	17	A5
8	Q3	18	A6	8	Q3	18	A6
9	Q4	19	A7	9	Q4	19	A7
10	GND	20	V_{CC}	10	GND	20	V_{CC}

373

OCTAL D-TYPE LATCHES
(three-state outputs, common output control, common enable)

typical performance

TYPE	OUT-PUTS	DELAY	TOTAL POWER
'ALS373	Q	8 ns	70 mW
'AS373			
'LS373	Q	19 ns	120 mW
'S373	Q	7 ns	525 mW

SN54ALS373 (J,FH) SN74ALS373 (N,FN)
SN54AS373 (J,FH) SN74AS373 (N,FN)
SN54LS373 (J,FH) SN74LS373 (J,N,FN)
SN54S373 (J,FH) SN74S373 (J,N,FN)

logic symbol LS373 ALS373 'AS373'

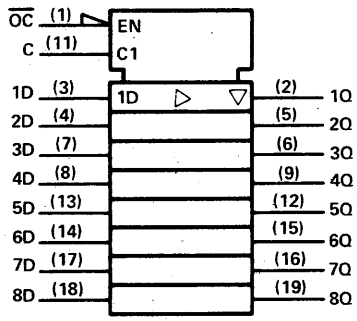

pin assignments

J, N PACKAGES				FH, FN PACKAGES			
1	OC̄	11	C	1	OC̄	11	C
2	1Q	12	5Q	2	1Q	12	5Q
3	1D	13	5D	3	1D	13	5D
4	2D	14	6D	4	2D	14	6D
5	2Q	15	6Q	5	2Q	15	6Q
6	3Q	16	7Q	6	3Q	16	7Q
7	3D	17	7D	7	3D	17	7D
8	4D	18	8D	8	4D	18	8D
9	4Q	19	8Q	9	4Q	19	8Q
10	GND	20	V_{CC}	10	GND	20	V_{CC}

logic symbol, 'S373†

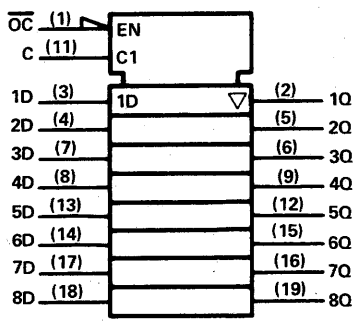

† Pin numbers shown on logic symbols are for J and N packages only.
nc — no internal connection.

Copyright © 1983 by Texas Instruments Incorporated.

374

OCTAL D-TYPE FLIP-FLOPS
(three-state outputs, common output control, common clock)

typical performance

TYPE	FREQ	POWER PER F-F	DATA TIMES SET-UP	DATA TIMES HOLD
'ALS374	50 MHz	10 mW		
'AS374				
'LS374	50 MHz	17 mW	20 ns†	0 ns†
'S374	100 MHz	56 mW	5 ns†	2 ns†

† Rising edge of clock pulse

SN54ALS374 (J,FH) SN74ALS374 (N,FN)
SN54AS374 (J,FH) SN74AS374 (N,FN)
SN54LS374 (J,FH) SN74LS374 (J,N,FN)
SN54S374 (J,FH) SN74S374 (J,N,FN)

logic symbol, 'LS374 'ALS374, 'AS374

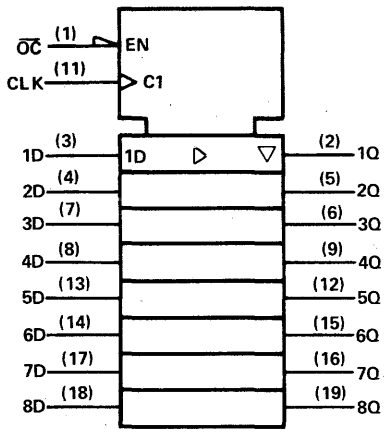

logic symbol, 'S374†

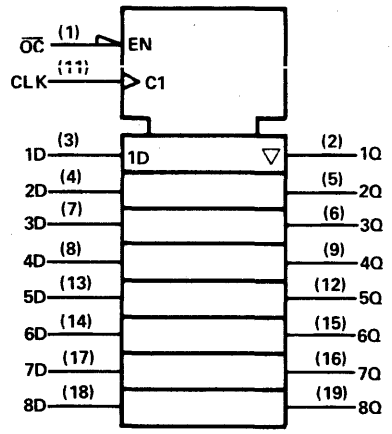

pin assignments

J, N PACKAGES				FH, FN PACKAGES			
1	$\overline{OC}$	11	CLK	1	$\overline{OC}$	11	CLK
2	1Q	12	5Q	2	1Q	12	5Q
3	1D	13	5D	3	1D	13	5D
4	2D	14	6D	4	2D	14	6D
5	2Q	15	6Q	5	2Q	15	6Q
6	3Q	16	7Q	6	3Q	16	7Q
7	3D	17	7D	7	3D	17	7D
8	4D	18	8D	8	4D	18	8D
9	4Q	19	8Q	9	4Q	19	8Q
10	GND	20	V_{CC}	10	GND	20	V_{CC}

375

4-BIT BISTABLE LATCHES

typical performance

OUTPUTS	DELAY	TOTAL POWER
Q,$\overline{Q}$	12 ns	32 mW

SN54LS375 (J,FH) SN74LS375 (J,N,FN)

logic symbol†

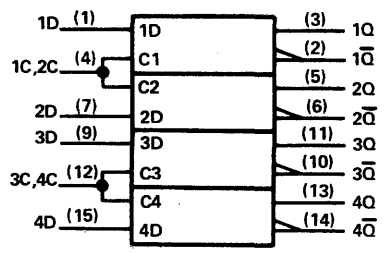

pin assignments

J, N PACKAGES				FH, FN PACKAGES			
1	1D	9	3D	1	nc	11	nc
2	1$\overline{Q}$	10	3$\overline{Q}$	2	1D	12	3D
3	1Q	11	3Q	3	1$\overline{Q}$	13	3$\overline{Q}$
4	1C,2C	12	3C,4C	4	1Q	14	3Q
5	2Q	13	4Q	5	1C,2C	15	3C,4C
6	2$\overline{Q}$	14	4$\overline{Q}$	6	nc	16	nc
7	2D	15	4D	7	2Q	17	4Q
8	GND	16	V_{CC}	8	2$\overline{Q}$	18	4$\overline{Q}$
				9	2D	19	4D
				10	GND	20	V_{CC}

† Pin numbers shown on logic symbols are for J and N packages only.
nc — no internal connection.

Copyright © 1983 by Texas Instruments Incorporated.

376

QUAD J-$\overline{K}$ FLIP-FLOPS
(common clock, common clear)

typical performance

FREQ	POWER PER F-F	DATA TIMES SET-UP	DATA TIMES HOLD
45 MHz	65 mW	0 ns↑	20 ns↑

↑ Rising edge of clock pulse

SN54376 (J,FH) SN74376 (J,N)

logic symbol†

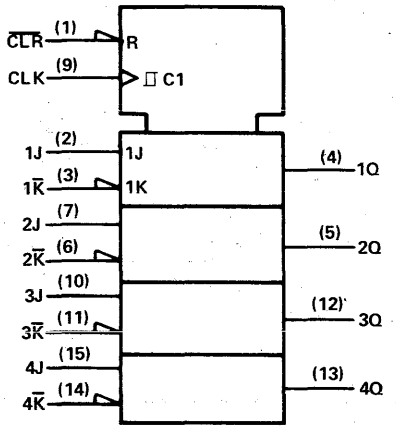

pin assignments

J, N PACKAGES				FH PACKAGE			
1	$\overline{CLR}$	9	CLK	1	nc	11	nc
2	1J	10	3J	2	$\overline{CLR}$	12	CLK
3	$1\overline{K}$	11	$3\overline{K}$	3	1J	13	3J
4	1Q	12	3Q	4	$1\overline{K}$	14	$3\overline{K}$
5	2Q	13	4Q	5	1Q	15	3Q
6	$2\overline{K}$	14	$4\overline{K}$	6	nc	16	nc
7	2J	15	4J	7	2Q	17	4Q
8	GND	16	V_{CC}	8	$2\overline{K}$	18	$4\overline{K}$
				9	2J	19	4J
				10	GND	20	V_{CC}

377

OCTAL D-TYPE FLIP-FLOPS
(single-rail outputs, common enable, common clock)

typical performance

FREQ	POWER PER F-F	DATA TIMES SET-UP	DATA TIMES HOLD
40 MHz	10.6 mW	20 ns↑	5 ns↑

↑ Rising edge of clock pulse

SN54LS377 (J,FH) SN74LS377 (J,N,FN)

logic symbol†

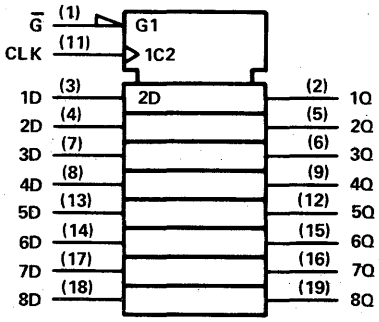

pin assignments

J, N PACKAGES				FH, FN PACKAGES			
1	$\overline{G}$	11	CLK	1	$\overline{G}$	11	CLK
2	1Q	12	5Q	2	1Q	12	5Q
3	1D	13	5D	3	1D	13	5D
4	2D	14	6D	4	2D	14	6D
5	2Q	15	6Q	5	2Q	15	6Q
6	3Q	16	7Q	6	3Q	16	7Q
7	3D	17	7D	7	3D	17	7D
8	4D	18	8D	8	4D	18	8D
9	4Q	19	8Q	9	4Q	19	8Q
10	GND	20	V_{CC}	10	GND	20	V_{CC}

378

HEX D-TYPE FLIP-FLOPS
(single-rail outputs, common enable, common clock)

typical performance

FREQ	POWER PER F-F	DATA TIMES SET-UP	DATA TIMES HOLD
40 MHz	10.6 mW	20 ns↑	5 ns↑

↑ Rising edge of clock pulse

SN54LS378 (J,FH) SN74LS378 (J,N,FN)

logic symbol†

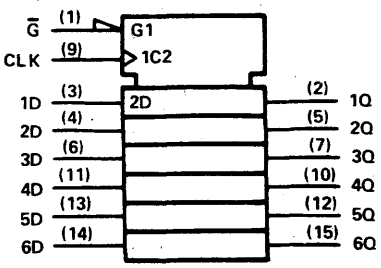

pin assignments

J, N PACKAGES				FH, FN PACKAGES			
1	$\overline{G}$	9	CLK	1	nc	11	nc
2	1Q	10	4Q	2	$\overline{G}$	12	CLK
3	1D	11	4D	3	1Q	13	4Q
4	2D	12	5Q	4	1D	14	4D
5	2Q	13	5D	5	2D	15	5Q
6	3D	14	6D	6	nc	16	nc
7	3Q	15	6Q	7	2Q	17	5D
8	GND	16	V_{CC}	8	3D	18	6D
				9	3Q	19	6Q
				10	GND	20	V_{CC}

† Pin numbers shown on logic symbols are for J and N packages only.
nc — no internal connection.

Copyright © 1983 by Texas Instruments Incorporated.

TEXAS INSTRUMENTS
POST OFFICE BOX 225012 • DALLAS, TEXAS 75265

379

QUAD D-TYPE FLIP-FLOPS (double-rail outputs, common enable, common clock)

typical performance

FREQ	POWER PER F-F	DATA TIMES	
		SET-UP	HOLD
40 MHz	10.6 mW	20 ns↑	5 ns↑

↑ Rising edge of clock pulse

SN54LS379 (J,FH)
SN74LS379 (J,N,FN)

logic symbol†

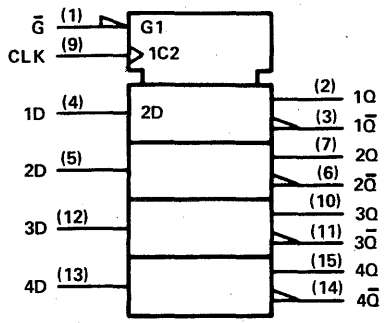

pin assignments

J, N PACKAGES				FH, FN PACKAGES			
1	G̅	9	CLK	1	nc	11	nc
2	1Q	10	3Q	2	G̅	12	CLK
3	1Q̅	11	3Q̅	3	1Q	13	3Q
4	1D	12	3D	4	1Q̅	14	3Q̅
5	2D	13	4D	5	1D	15	3D
6	2Q̅	14	4Q̅	6	nc	16	nc
7	2Q	15	4Q	7	2D	17	4D
8	GND	16	V_{CC}	8	2Q̅	18	4Q̅
				9	2Q	19	4Q
				10	GND	20	V_{CC}

381

ARITHMETIC LOGIC UNITS/ FUNCTION GENERATORS (8 binary functions, use 'S182 for look-ahead carry)

typical performance

TYPE	CARRY TIME	ADD TIME	TOTAL POWER
'LS381	16 ns	21 ns	175 mW
'S381	11 ns	20 ns	525 mW

SN54LS381 (J,FH)
SN54S381 (J,FH)
SN74LS381 (J,N,FN)
SN74S381 (J,N,FN)

logic symbol†

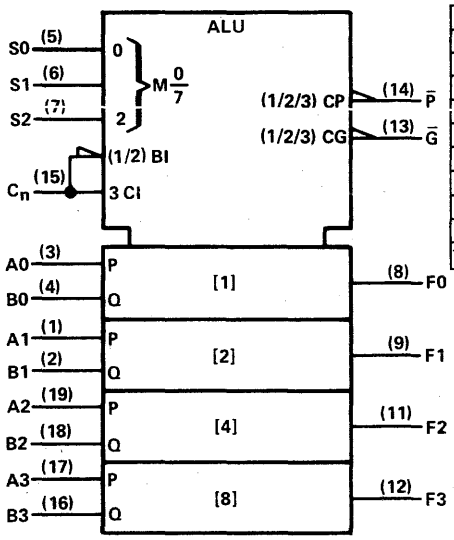

pin assignments

J, N PACKAGES				FH, FN PACKAGES			
1	A1	11	F2	1	A1	11	F2
2	B1	12	F3	2	B1	12	F3
3	A0	13	G̅	3	A0	13	G̅
4	B0	14	P̅	4	B0	14	P̅
5	S0	15	C_n	5	S0	15	C_n
6	S1	16	B3	6	S1	16	B3
7	S2	17	A3	7	S2	17	A3
8	F0	18	B2	8	F0	18	B2
9	F1	19	A2	9	F1	19	A2
10	GND	20	V_{CC}	10	GND	20	V_{CC}

† Pin numbers shown on logic symbols are for J and N packages only.
nc — no internal connection.

Copyright © 1983 by Texas Instruments Incorporated.

382

ARITHMETIC LOGIC UNITS/ FUNCTION GENERATORS
(ripple carry and overflow outputs)

typical performance

TYPE	CARRY TIME	ADD TIME	TOTAL POWER
'LS382	27 ns	18 ns	175 mW

SN54LS382 (J,FH)
SN74LS382 (J,N,FN)

logic symbol†

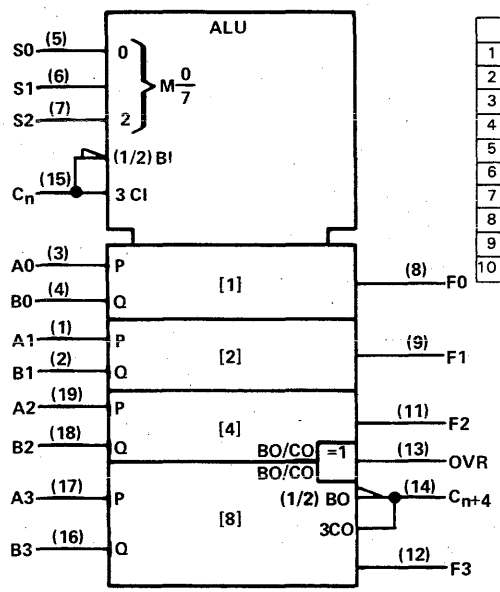

pin assignments

J, N PACKAGES				FH, FN PACKAGES			
1	A1	11	F2	1	A1	11	F2
2	B1	12	F3	2	B1	12	F3
3	A0	13	OVR	3	A0	13	OVR
4	B0	14	C_{n+4}	4	B0	14	C_{n+4}
5	S0	15	C_n	5	S0	15	C_n
6	S1	16	B3	6	S1	16	B3
7	S2	17	A3	7	S2	17	A3
8	F0	18	B2	8	F0	18	B2
9	F1	19	A2	9	F1	19	A2
10	GND	20	V_{CC}	10	GND	20	V_{CC}

384

8-BIT BY 1-BIT TWO'S-COMPLEMENT MULTIPLIERS

- Magnitude-only multiplication
- Cascadable for any number of bits
- Serial multiplier data input
- Serial data output for multiplication product
- 8-Bit parallel multiplicand data input
- 40 MHz typical max clock frequency

typical performance

MAX CLOCK FREQ	DELAY FROM CLOCK	DELAY FROM CLEAR	TOTAL POWER
40 MHz	15 ns	17 ns	455 mW

SN54LS384 (J,FH)
SN74LS384 (J,N,FN)

logic symbol†

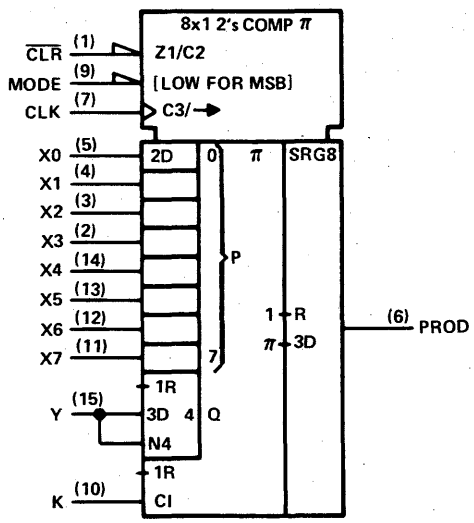

pin assignments

J, N PACKAGES				FH, FN PACKAGES			
1	$\overline{CLR}$	9	MODE	1	nc	11	nc
2	X3	10	K	2	$\overline{CLR}$	12	MODE
3	X2	11	X7	3	X3	13	K
4	X1	12	X6	4	X2	14	X7
5	X0	13	X5	5	X1	15	X6
6	PROD	14	X4	6	nc	16	nc
7	CLK	15	Y	7	X0	17	X5
8	GND	16	V_{CC}	8	PROD	18	X4
				9	CLK	19	Y
				10	GND	20	V_{CC}

† Pin numbers shown on logic symbols are for J and N packages only.
nc — no internal connection.

Copyright © 1983 by Texas Instruments Incorporated.

TEXAS INSTRUMENTS
POST OFFICE BOX 225012 • DALLAS, TEXAS 75265

385

QUADRUPLE SERIAL ADDERS/ SUBTRACTORS

- Buffered clock, direct clear inputs
- Independent two's-complement addition/subtraction

typical performance

f_{max}	DELAY	POWER
40 MHz	16 ns	240 mW

SN54LS385 (J,FH)

SN74LS385 (J,N,FN)

logic symbol†

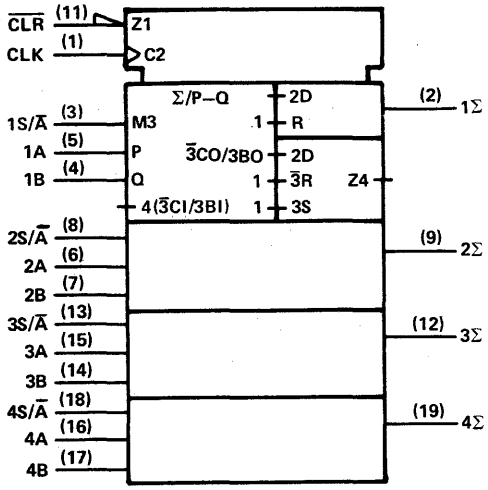

pin assignments

J, N PACKAGES				FH, FN PACKAGES			
1	CLK	11	CLR	1	CLK	11	CLR
2	1Σ	12	3Σ	2	1Σ	12	3Σ
3	1S/Ā	13	3S/Ā	3	1S/Ā	13	3S/Ā
4	1B	14	3B	4	1B	14	3B
5	1A	15	3A	5	1A	15	3A
6	2A	16	4A	6	2A	16	4A
7	2B	17	4B	7	2B	17	4B
8	2S/Ā	18	4S/Ā	8	2S/Ā	18	4S/Ā
9	2Σ	19	4Σ	9	2Σ	19	4Σ
10	GND	20	V_{CC}	10	GND	20	V_{CC}

386

QUAD 2-INPUT EXCLUSIVE-OR GATES

typical performance

TYPE	DELAY	TOTAL POWER
'LS386	10 ns	30 mW

SN54LS386 (J,FH)

SN74LS386 (J,N,FN)

logic symbol†

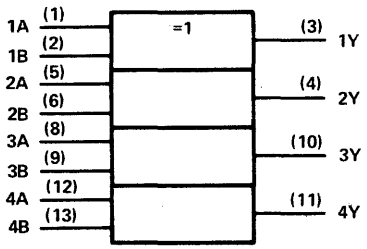

positive logic: $Y = A \oplus B = \bar{A}B + A\bar{B}$

pin assignments

J, N PACKAGES				FH, FN PACKAGES			
1	1A	8	3A	1	nc	11	nc
2	1B	9	3B	2	1A	12	3A
3	1Y	10	3Y	3	1B	13	3B
4	2Y	11	4Y	4	1Y	14	3Y
5	2A	12	4A	5	nc	15	nc
6	2B	13	4B	6	2Y	16	4Y
7	GND	14	V_{CC}	7	nc	17	nc
				8	2A	18	4A
				9	2B	19	4B
				10	GND	20	V_{CC}

387

(This number has been changed to TBP14SA10. Product Guide information for this PROM can be found at the end of this section.)

† Pin numbers shown on logic symbols are for J and N packages only.

nc — no internal connection.

Copyright © 1983 by Texas Instruments Incorporated.

390

DUAL DECADE COUNTERS

(bi-quinary or bcd sequences)

typical performance

TYPE	COUNT FREQ	CLEAR	TOTAL POWER
'390	25 MHz	HIGH	210 mW
'LS390	35 MHz	HIGH	75 mW

SN54390 (J,FH) SN74390 (J,N)
SN54LS390 (J,FH) SN74LS390 (J,N,FN)

logic symbol†

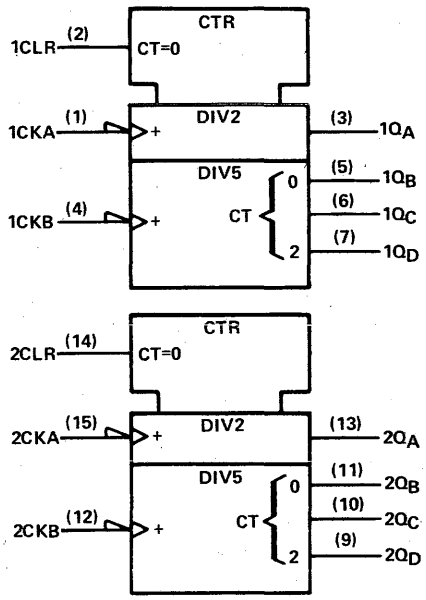

pin assignments

J, N PACKAGES				FH, FN PACKAGES			
1	1CKA	9	$2Q_D$	1	nc	11	nc
2	1CLR	10	$2Q_C$	2	1CKA	12	$2Q_D$
3	$1Q_A$	11	$2Q_B$	3	1CLR	13	$2Q_C$
4	1CKB	12	2CKB	4	$1Q_A$	14	$2Q_B$
5	$1Q_B$	13	$2Q_A$	5	1CKB	15	2CKB
6	$1Q_C$	14	2CLR	6	nc	16	nc
7	$1Q_D$	15	2CKA	7	$1Q_B$	17	$2Q_A$
8	GND	16	V_{CC}	8	$1Q_C$	18	2CLR
				9	$1Q_D$	19	2CKA
				10	GND	20	V_{CC}

393

DUAL 4-BIT BINARY COUNTERS

typical performance

TYPE	COUNT FREQ	CLEAR	TOTAL POWER
'393	25 MHz	HIGH	190 mW
'LS393	35 MHz	HIGH	75 mW

SN54393 (J,FH) SN74393 (J,N)
SN54LS393 (J,FH) SN74LS393 (J,N,FN)

logic symbol†

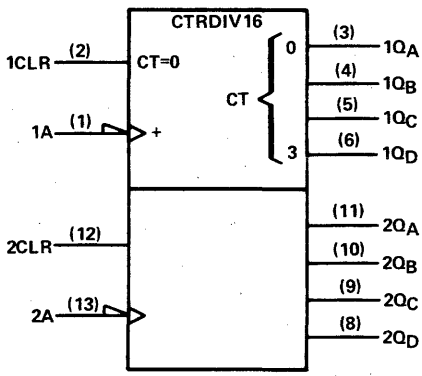

pin assignments

J, N PACKAGES				FH, FN PACKAGES			
1	1A	8	$2Q_D$	1	nc	11	nc
2	1CLR	9	$2Q_C$	2	1A	12	$2Q_D$
3	$1Q_A$	10	$2Q_B$	3	1CLR	13	$2Q_C$
4	$1Q_B$	11	$2Q_A$	4	$1Q_A$	14	$2Q_B$
5	$1Q_C$	12	2CLR	5	nc	15	nc
6	$1Q_D$	13	2A	6	$1Q_B$	16	$2Q_A$
7	GND	14	V_{CC}	7	nc	17	nc
				8	$1Q_C$	18	2CLR
				9	$1Q_D$	19	2A
				10	GND	20	V_{CC}

395

4-BIT UNIVERSAL SHIFT REGISTERS

(three-state outputs)

typical performance

TYPE	SHIFT FREQ	SERIAL DATA INPUT	ASYNC CLEAR	TOTAL POWER
'AS395				
'LS395A	30 MHz	D	LOW	75 mW

SN54AS395 (J,FH) SN74AS395 (N,FN)
SN54LS395A (J,FH) SN74LS395A (J,N,FN)

logic symbol†

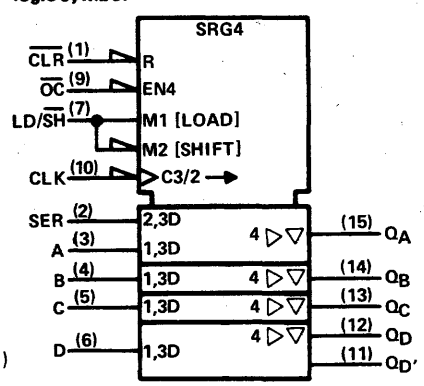

pin assignments

J, N PACKAGES				FH, FN PACKAGES			
1	$\overline{CLR}$	9	$\overline{OC}$	1	nc	11	nc
2	SER	10	CLK	2	$\overline{CLR}$	12	$\overline{OC}$
3	A	11	Q_D'	3	SER	13	CLK
4	B	12	Q_D	4	A	14	Q_D'
5	C	13	Q_C	5	B	15	Q_D
6	D	14	Q_B	6	nc	16	nc
7	LD/$\overline{SH}$	15	Q_A	7	C	17	Q_C
8	GND	16	V_{CC}	8	D	18	Q_B
				9	LD/$\overline{SH}$	19	Q_A
				10	GND	20	V_{CC}

† Pin numbers shown on logic symbols are for J and N packages only.
nc — no internal connection.

See ALS/AS availability at front of this Product Guide.

Copyright © 1983 by Texas Instruments Incorporated.

TEXAS INSTRUMENTS
POST OFFICE BOX 225012 • DALLAS, TEXAS 75265

396

OCTAL STORAGE REGISTERS

- Parallel access
- Applications:
  - N-bit storage files
  - HEX/BCD serial to parallel converters

typical performance

TYPE	MAX CLOCK FREQ	DELAY	POWER
'LS396	30 MHz	20 ns	120 mW

SN54LS396 (J,FH) SN74LS396 (J,N,FN)

logic symbol†

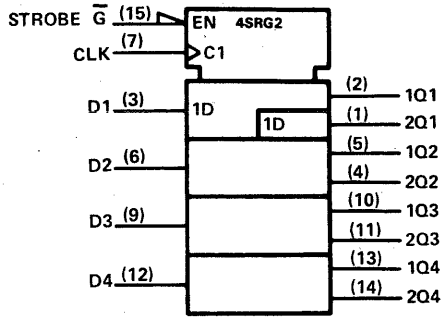

pin assignments

J, N PACKAGES				FH, FN PACKAGES			
1	2Q1	9	D3	1	nc	11	nc
2	1Q1	10	1Q3	2	2Q1	12	D3
3	D1	11	2Q3	3	1Q1	13	1Q3
4	2Q2	12	D4	4	D1	14	2Q3
5	1Q2	13	1Q4	5	2Q2	15	D4
6	D2	14	2Q4	6	nc	16	nc
7	CLK	15	$\overline{G}$	7	1Q2	17	1Q4
8	GND	16	V_{CC}	8	D2	18	2Q4
				9	CLK	19	$\overline{G}$
				10	GND	20	V_{CC}

398

QUAD 2-INPUT MULTIPLEXERS WITH STORAGE

(double-rail outputs)

typical performance

TYPE	DELAY TIMES		TOTAL POWER
	CLOCK TO INV OUTPUT	CLOCK TO NON-INV OUTPUT	
'LS398	20 ns	20 ns	32 mW

SN54LS398 (J,FH) SN74LS398 (J,N,FN)

logic symbol†

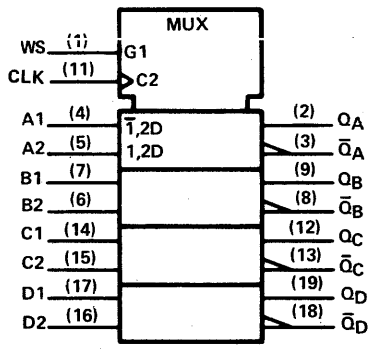

pin assignments

J, N PACKAGES				FH, FN PACKAGES			
1	WS	11	CLK	1	WS	11	CLK
2	Q_A	12	Q_C	2	Q_A	12	Q_C
3	$\overline{Q}_A$	13	$\overline{Q}_C$	3	$\overline{Q}_A$	13	$\overline{Q}_C$
4	A1	14	C1	4	A1	14	C1
5	A2	15	C2	5	A2	15	C2
6	B2	16	D2	6	B2	16	D2
7	B1	17	D1	7	B1	17	D1
8	$\overline{Q}_B$	18	$\overline{Q}_D$	8	$\overline{Q}_B$	18	$\overline{Q}_D$
9	Q_B	19	Q_D	9	Q_B	19	Q_D
10	GND	20	V_{CC}	10	GND	20	V_{CC}

399

QUAD 2-INPUT MULTIPLEXERS WITH STORAGE

typical performance

TYPE	DELAY	TOTAL POWER
'LS399	20 ns*	37 mW

* From clock to output

SN54LS399 (J,FH) SN74LS399 (J,N,FN)

logic symbol†

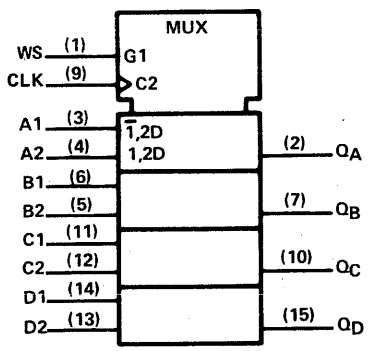

pin assignments

J, N PACKAGES				FH, FN PACKAGES			
1	WS	9	CLK	1	nc	11	nc
2	Q_A	10	Q_C	2	WS	12	CLK
3	A1	11	C1	3	Q_A	13	Q_C
4	A2	12	C2	4	A1	14	C1
5	B2	13	D2	5	A2	15	C2
6	B1	14	D1	6	nc	16	nc
7	Q_B	15	Q_D	7	B2	17	D2
8	GND	16	V_{CC}	8	B1	18	D1
				9	Q_B	19	Q_D
				10	GND	20	V_{CC}

† Pin numbers shown on logic symbols are for J and N packages only.
nc — no internal connection.

See ALS/AS availability at front of this Product Guide.

Copyright © 1983 by Texas Instruments Incorporated.

TEXAS INSTRUMENTS
POST OFFICE BOX 225012 • DALLAS, TEXAS 75265

© IC MASTER 1984

412

MULTI-MODE BUFFERED 8-BIT LATCHES

(three-state outputs; direct clear)

typical performance

CLEAR	OUT-PUTS	DELAY	TOTAL POWER
LOW	Q	11 ns	410 mW

SN54S412 (J,FH) SN74S412 (J,N,FN)

logic symbol†

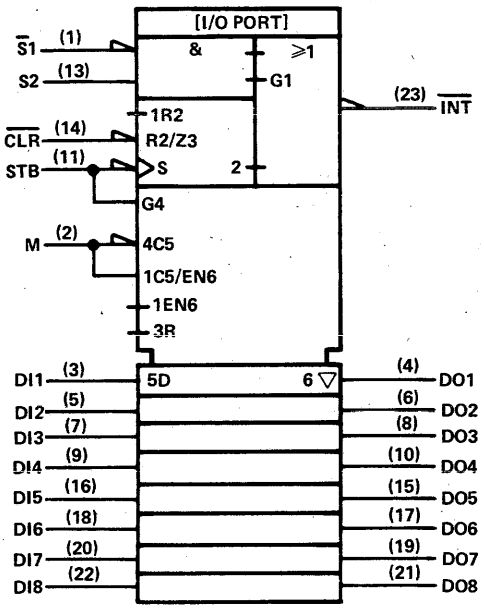

pin assignments

J, N PACKAGES				FH, FN PACKAGES			
1	$\overline{S1}$	13	S2	1	nc	15	nc
2	M	14	$\overline{CLR}$	2	$\overline{S1}$	16	S2
3	DI1	15	DO5	3	M	17	$\overline{CLR}$
4	DO1	16	DI5	4	DI1	18	DO5
5	DI2	17	DO6	5	DO1	19	DI5
6	DO2	18	DI6	6	DI2	20	DO6
7	DI3	19	DO7	7	DO2	21	DI6
8	DO3	20	DI7	8	nc	22	nc
9	DI4	21	DO8	9	DI3	23	DO7
10	DO4	22	DI8	10	DO3	24	DI7
11	STB	23	$\overline{INT}$	11	DI4	25	DO8
12	GND	24	V_{CC}	12	DO4	26	DI8
				13	STB	27	$\overline{INT}$
				14	GND	28	V_{CC}

422

RE-TRIGGERABLE MONO-STABLE MULTIVIBRATORS

- Internal timing resistor
- Up to 100% duty cycle
- Will not trigger from clear

typical performance

NO. OF INPUTS		OUTPUT PULSE RANGE	TOTAL POWER
HIGH	LOW		
2	2	40 ns-∞	30 mW

SN54LS422 (J,FH) SN74LS422 (J,N,FN)

logic symbol†

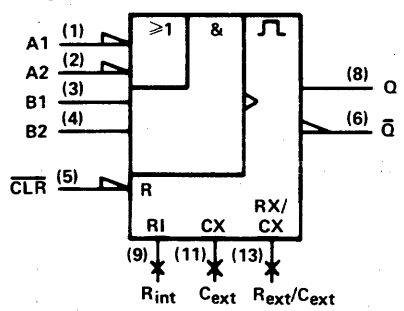

pin assignments

J, N PACKAGES				FH, FN PACKAGES			
1	A1	8	Q	1	nc	11	nc
2	A2	9	R_{int}	2	A1	12	Q
3	B1	10	nc	3	A2	13	R_{int}
4	B2	11	C_{ext}	4	B1	14	nc
5	$\overline{CLR}$	12	nc	5	nc	15	nc
6	$\overline{Q}$	13	R_{ext}/C_{ext}	6	B2	16	C_{ext}
7	GND	14	V_{CC}	7	nc	17	nc
				8	$\overline{CLR}$	18	nc
				9	$\overline{Q}$	19	R_{ext}/C_{ext}
				10	GND	20	V_{CC}

423

RE-TRIGGERABLE MONO-STABLE MULTIVIBRATORS

- Up to 100% duty cycle
- Will not trigger from clear

typical performance

NO. OF INPUTS		OUTPUT PULSE RANGE	TOTAL POWER
HIGH	LOW		
1	1	40 ns-∞	60 mW

SN54LS423 (J,FH) SN74LS423 (J,N,FN)

logic symbol†

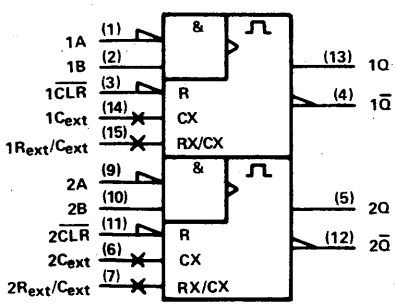

pin assignments

J, N PACKAGES				FH, FN PACKAGES			
1	1A	9	2A	1	nc	11	nc
2	1B	10	2B	2	1A	12	2A
3	$1\overline{CLR}$	11	$2\overline{CLR}$	3	1B	13	2B
4	$1\overline{Q}$	12	$2\overline{Q}$	4	$1\overline{CLR}$	14	$2\overline{CLR}$
5	2Q	13	1Q	5	$1\overline{Q}$	15	$2\overline{Q}$
6	$2C_{ext}$	14	$1C_{ext}$	6	nc	16	nc
7	$2R_{ext}/C_{ext}$	15	$1R_{ext}/C_{ext}$	7	2Q	17	1Q
8	GND	16	V_{CC}	8	$2C_{ext}$	18	$1C_{ext}$
				9	$2R_{ext}/C_{ext}$	19	$1R_{ext}/C_{ext}$
				10	GND	20	V_{CC}

† Pin numbers shown on logic symbols are for J and N packages only.

nc — no internal connection.

Copyright © 1983 by Texas Instruments Incorporated.

TEXAS INSTRUMENTS
POST OFFICE BOX 225012 • DALLAS, TEXAS 75265

425

QUAD GATES
(three-state outputs, active-low enabling)

typical performance

TYPE	DELAY	MAX SOURCE CURRENT	MAX SINK CURRENT
SN54425	10 ns	−2 mA	16 mA
SN74425	10 ns	−5.2 mA	16 mA

SN54425 (J,FH) SN74425 (J,N)

logic symbol†

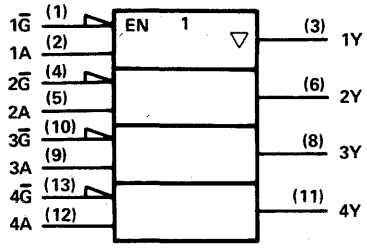

positive logic: Y = A

pin assignments

J, N PACKAGES				FH PACKAGE			
1	1G̅	8	3Y	1	nc	11	nc
2	1A	9	3A	2	1G̅	12	3Y
3	1Y	10	3G̅	3	1A	13	3A
4	2G̅	11	4Y	4	1Y	14	3G̅
5	2A	12	4A	5	nc	15	nc
6	2Y	13	4G̅	6	2G̅	16	4Y
7	GND	14	V_{CC}	7	nc	17	nc
				8	2A	18	4A
				9	2Y	19	4G̅
				10	GND	20	V_{CC}

426

QUAD GATES
(three-state outputs, active-high enabling)

typical performance

TYPE	DELAY	MAX SOURCE CURRENT	MAX SINK CURRENT
SN54426	10 ns	−2 mA	16 mA
SN74426	10 ns	−5.2 mA	16 mA

SN54426 (J,FH) SN74426 (J,N)

logic symbol†

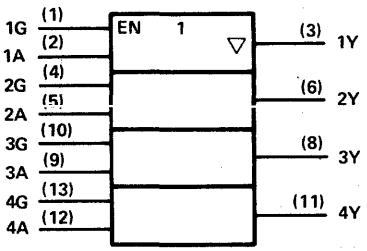

positive logic: Y = A

pin assignments

J, N PACKAGES				FH PACKAGE			
1	1G	8	3Y	1	nc	11	nc
2	1A	9	3A	2	1G	12	3Y
3	1Y	10	3G	3	1A	13	3A
4	2G	11	4Y	4	1Y	14	3G
5	2A	12	4A	5	nc	15	nc
6	2Y	13	4G	6	2G	16	4Y
7	GND	14	V_{CC}	7	nc	17	nc
				8	2A	18	4A
				9	2Y	19	4G
				10	GND	20	V_{CC}

428, 438

SYSTEM CONTROLLER FOR 8080A

typical performance

TYPE	POWER
'S428	700 mW
'S438	700 mW

SN74S428 (J,N,FN)
SN74S438 (J,N,FN)

logic symbol†

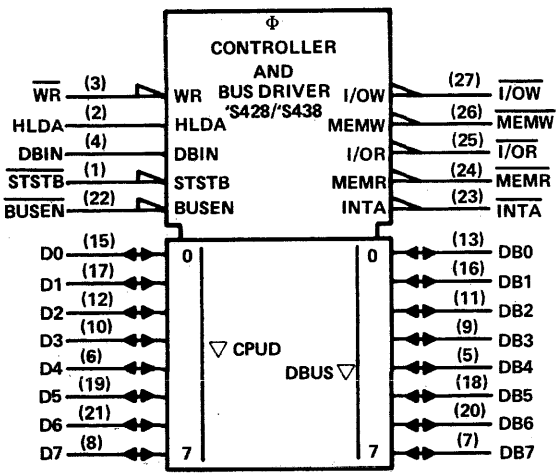

pin assignments

J, N PACKAGES				FN PACKAGE			
1	STSTB	15	D0	1	STSTB	15	D0
2	HLDA	16	DB1	2	HLDA	16	DB1
3	WR	17	D1	3	WR	17	D1
4	DBIN	18	DB5	4	DBIN	18	DB5
5	DB4	19	D5	5	DB4	19	D5
6	D4	20	DB6	6	D4	20	DB6
7	DB7	21	D6	7	DB7	21	D6
8	D7	22	BUSEN	8	D7	22	BUSEN
9	DB3	23	INTA	9	DB3	23	INTA
10	D3	24	MEMR	10	D3	24	MEMR
11	DB2	25	I/OR	11	DB2	25	I/OR
12	D2	26	MEMW	12	D2	26	MEMW
13	DB0	27	I/OW	13	DB0	27	I/OW
14	GND	28	V_{CC}	14	GND	28	V_{CC}

† Pin numbers shown on logic symbols are for J and N packages only.
nc — no internal connection.

Copyright © 1983 by Texas Instruments Incorporated.

TEXAS INSTRUMENTS
POST OFFICE BOX 225012 • DALLAS, TEXAS 75265

© IC MASTER 1984

436, 437

LINE DRIVER/MEMORY DRIVER CIRCUITS – MOS MEMORY INTERFACE

- Drives high-impedance loads
- Provides high-speed switching
- Requires minimum input current
- Damping output resistor for reducing transients ('436)
- Total power . . . 70 mW

typical performance

TYPE	LOW-LEVEL OUTPUT CURRENT	HIGH-LEVEL OUTPUT CURRENT	DELAY
'S436	150 mA	–1 mA	5.5 ns
'S437	150 mA	–1 mA	5.5 ns

SN54S436 (J,FH) SN74S436 (J,N,FN)
SN54S437 (J,FH) SN74S437 (J,N,FN)

logic symbol†

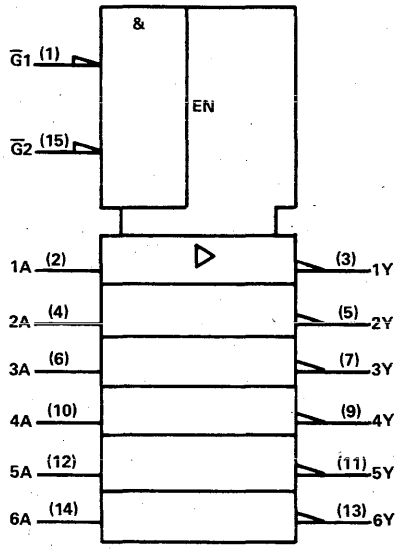

pin assignments

J, N PACKAGES				FH, FN PACKAGES			
1	$\overline{G1}$	9	4Y	1	nc	11	nc
2	1A	10	4A	2	$\overline{G1}$	12	4Y
3	1Y	11	5Y	3	1A	13	4A
4	2A	12	5A	4	1Y	14	5Y
5	2Y	13	6Y	5	2A	15	5A
6	3A	14	6A	6	nc	16	nc
7	3Y	15	$\overline{G2}$	7	2Y	17	6Y
8	GND	16	V_{CC}	8	3A	18	6A
				9	3Y	19	$\overline{G2}$
				10	GND	20	V_{CC}

QUAD TRIDIRECTIONAL BUS TRANSCEIVERS

440 (OPEN-COLLECTOR OUTPUTS, NONINVERTED LOGIC)
441 (OPEN-COLLECTOR OUTPUTS, INVERTED LOGIC)
442 (THREE-STATE OUTPUTS, NONINVERTED LOGIC)
443 (THREE-STATE OUTPUTS, INVERTED LOGIC)
444 (THREE-STATE OUTPUTS, INVERTED AND NONINVERTED LOGIC)

ALSO SEE 'LS448

typical performance

TYPE	DELAY	MAX SOURCE CURRENT	MAX SINK CURRENT
SN54LS440	22 ns	–	12 mA
SN74LS440	22 ns	–	24 mA
SN54LS441	15 ns	–	12 mA
SN74LS441	15 ns	–	24 mA
SN54LS442	11.5 ns	–12 mA	12 mA
SN74LS442	11.5 ns	–15 mA	24 mA
SN54LS443	8 ns	–12 mA	12 mA
SN74LS443	8 ns	–15 mA	24 mA
SN54LS444	9 ns	–12 mA	12 mA
SN74LS444	9 ns	–15 mA	24 mA

SN54LS440 (J,FH) SN74LS440 (J,FN)
SN54LS441 (J,FH) SN74LS441 (J,FN)
SN54LS442 (J,FH) SN74LS442 (J,FN)
SN54LS443 (J,FH) SN74LS443 (J,FN)
SN54LS444 (J,FH) SN74LS444 (J,FN)

pin assignments

J, N PACKAGES				FH, FN PACKAGES			
1	$\overline{CS}$	11	S0	1	$\overline{CS}$	11	S0
2	B1	12	S1	2	B1	12	S1
3	C1	13	A4	3	C1	13	A4
4	C2	14	A3	4	C2	14	A3
5	B2	15	A2	5	B2	15	A2
6	B3	16	A1	6	B3	16	A1
7	C3	17	$\overline{GA}$	7	C3	17	$\overline{GA}$
8	C4	18	$\overline{GB}$	8	C4	18	$\overline{GB}$
9	B4	19	$\overline{GC}$	9	B4	19	$\overline{GC}$
10	GND	20	V_{CC}	10	GND	20	V_{CC}

For logic symbols see next two pages.

† Pin numbers shown on logic symbols are for J and N packages only.
nc – no internal connection.

Copyright © 1983 by Texas Instruments Incorporated.

440, 441, 442, 443, 444 (continued)

logic symbol

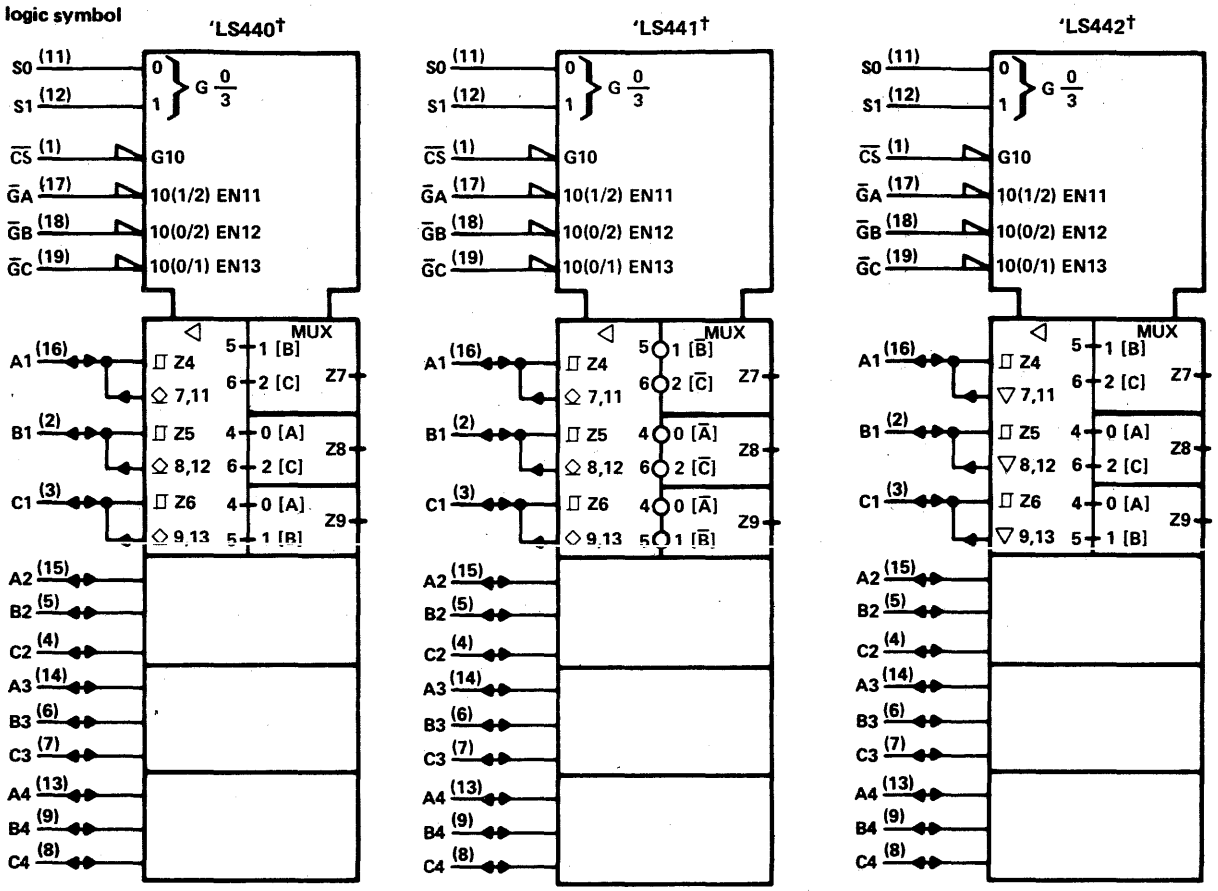

† Pin numbers shown on logic symbols are for J and N packages only.

nc — no internal connection.

Copyright © 1983 by Texas Instruments Incorporated.

440, 441, 442, 443, 444 (continued)

'LS443†

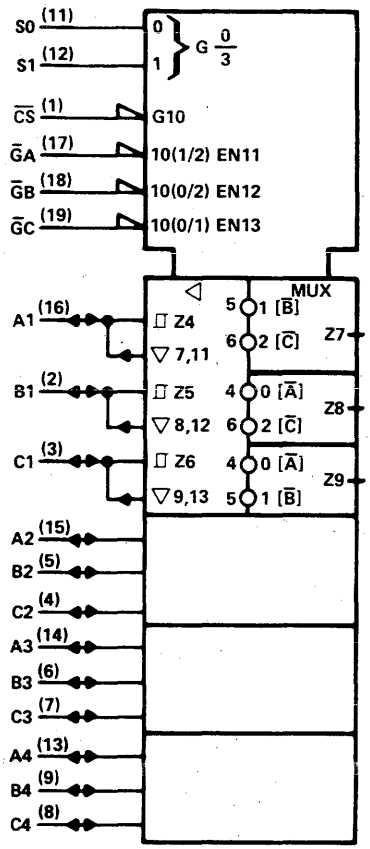

'LS444†

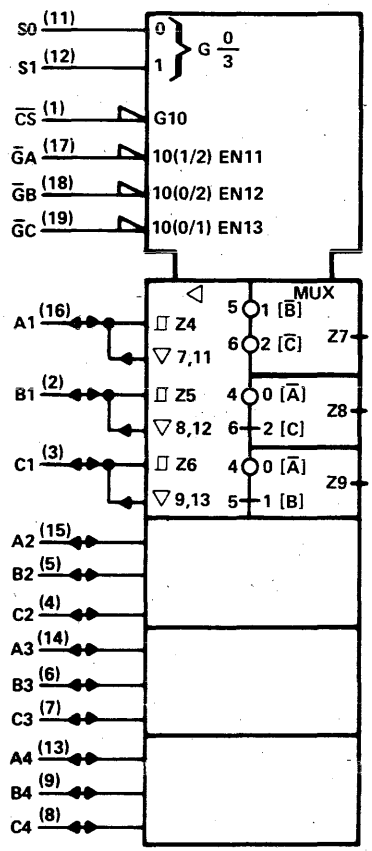

445

BCD-TO-DECIMAL DECODERS/DRIVERS

- Use as lamp, relay, or MOS driver
- Low-voltage version of 'LS145
- Full decoding of input logic
- All outputs off for invalid BCD input conditions

typical performance

OUTPUT SINK CURRENT	OFF-STATE OUTPUT VOLTAGE	TOTAL POWER
80 mA	7 V	35 mW

SN54LS445 (J,FH) SN74LS445 (J,N,FN)

logic symbol†

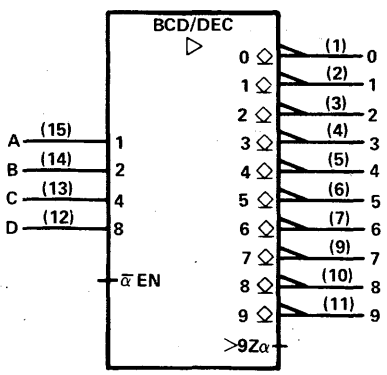

pin assignments

J, N PACKAGES				FH, FN PACKAGES			
1	0	9	7	1	nc	11	nc
2	1	10	8	2	0	12	7
3	2	11	9	3	1	13	8
4	3	12	D	4	2	14	9
5	4	13	C	5	3	15	D
6	5	14	B	6	nc	16	nc
7	6	15	A	7	4	17	C
8	GND	16	V_{CC}	8	5	18	B
				9	6	19	A
				10	GND	20	V_{CC}

† Pin numbers shown on logic symbols are for J and N packages only.
nc — no internal connection.

Copyright © 1983 by Texas Instruments Incorporated.

446

QUAD BUS TRANSCEIVERS WITH DIRECTION CONTROLS

- Three-state outputs
- True ('LS449) and inverting ('LS446) outputs
- P-N-P inputs to reduce dc bus line loading

typical performance

TYPE	DELAY	MAX SOURCE CURRENT	MAX SINK CURRENT
SN54LS446	7.5 ns	−12 mA	12 mA
SN74LS446	7.5 ns	−15 mA	24 mA

SN54LS446 (J,FH) SN74LS446 (J,N,FN)

logic symbol†

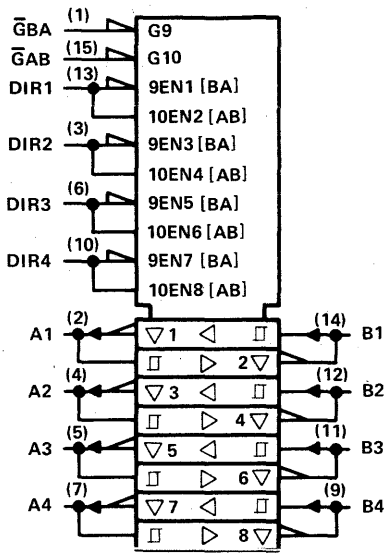

pin assignments

J, N PACKAGES				FH, FN PACKAGES			
1	ḠBA	9	B4	1	nc	11	nc
2	A1	10	DIR4	2	ḠBA	12	B4
3	DIR2	11	B3	3	A1	13	DIR4
4	A2	12	B2	4	DIR2	14	B3
5	A3	13	DIR1	5	A2	15	B2
6	DIR3	14	B1	6	nc	16	nc
7	A4	15	ḠAB	7	A3	17	DIR1
8	GND	16	V_{CC}	8	DIR3	18	B1
				9	A4	19	ḠAB
				10	GND	20	V_{CC}

447

BCD-TO-SEVEN-SEGMENT DECODERS/DRIVERS

- Low-voltage version of 'LS247
- Open-collector outputs drive indicators directly
- Ripple blanking

typical performance

TYPE	OUTPUT SINK CURRENT	OFF-STATE OUTPUT VOLTAGE	TOTAL POWER
SN54LS447	1.6 mA	7 V	35 mW
SN74LS447	3.2 mA	7 V	35 mW

SN54LS447 (J,FH) SN74LS447 (J,N,FN)

logic symbol†

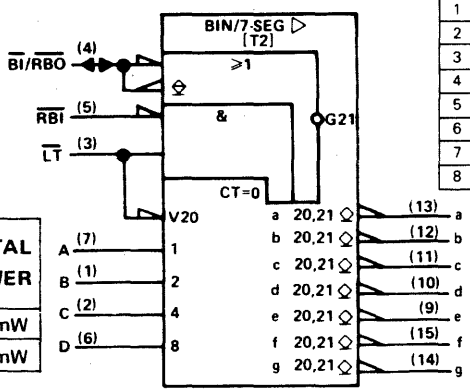

pin assignments

J, N PACKAGES				FH, FN PACKAGES			
1	B	9	e	1	nc	11	nc
2	C	10	d	2	B	12	e
3	LT	11	c	3	C	13	d
4	BI/RBO	12	b	4	LT	14	c
5	RBI	13	a	5	BI/RBO	15	b
6	D	14	g	6	nc	16	nc
7	A	15	f	7	RBI	17	a
8	GND	16	V_{CC}	8	D	18	g
				9	A	19	f
				10	GND	20	V_{CC}

† Pin numbers shown on logic symbols are for J and N packages only.
nc – no internal connection.

FONT TABLE T2 – NUMERICAL DESIGNATIONS AND RESULTANT DISPLAYS USING '447

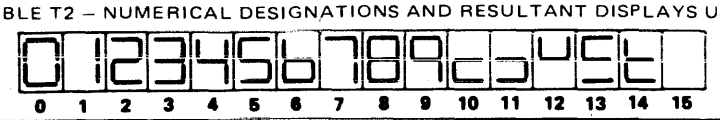

Copyright © 1983 by Texas Instruments Incorporated.

TEXAS INSTRUMENTS
POST OFFICE BOX 225012 • DALLAS, TEXAS 75265

© IC MASTER 1984

448

QUAD TRIDIRECTIONAL BUS TRANSCEIVERS

(OPEN-COLLECTOR OUTPUTS, INVERTED AND NONINVERTED LOGIC)

typical performance

TYPE	DELAY	MAX SOURCE CURRENT	MAX SINK CURRENT
SN54LS448	17.5 ns	—	12 mA
SN74LS448	17.5 ns	—	24 mA

SN54LS448 (J,FH) SN74LS448 (J,N,FN)

logic symbol†

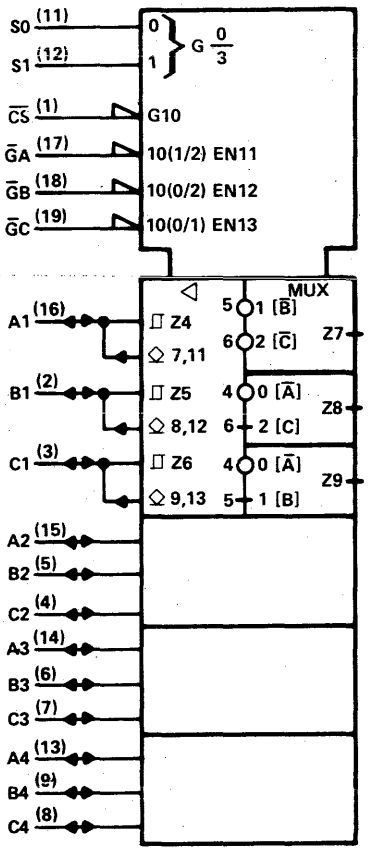

pin assignments

J, N PACKAGES				FH, FN PACKAGES			
1	CS	11	S0	1	CS	11	S0
2	B1	12	S1	2	B1	12	S1
3	C1	13	A4	3	C1	13	A4
4	C2	14	A3	4	C2	14	A3
5	B2	15	A2	5	B2	15	A2
6	B3	16	A1	6	B3	16	A1
7	C3	17	GA	7	C3	17	GA
8	C4	18	GB	8	C4	18	GB
9	B4	19	GC	9	B4	19	GC
10	GND	20	V_{CC}	10	GND	20	V_{CC}

449

QUAD BUS TRANSCEIVERS WITH DIRECTION CONTROLS

- Three-state outputs
- True ('LS449) and inverting ('LS446) outputs
- P-N-P inputs to reduce dc bus line loading

typical performance

TYPE	DELAY	MAX SOURCE CURRENT	MAX SINK CURRENT
SN54LS449	10.5 ns	−12 mA	12 mA
SN74LS449	10.5 ns	−15 mA	24 mA

SN54LS449 (J,FH) SN74LS449 (J,N,FN)

logic symbol†

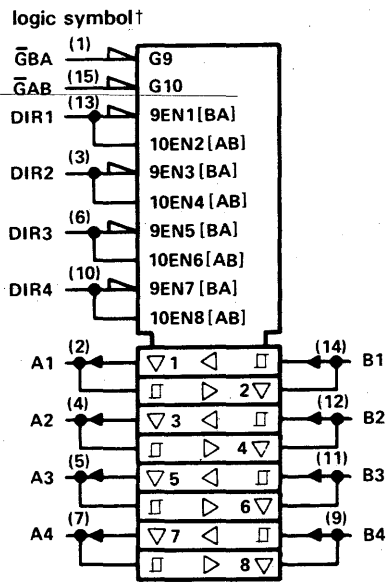

pin assignments

J, N PACKAGES				FH, FN PACKAGES			
1	GBA	9	B4	1	nc	11	nc
2	A1	10	DIR4	2	GBA	12	B4
3	DIR2	11	B3	3	A1	13	DIR4
4	A2	12	B2	4	DIR2	14	B3
5	A3	13	DIR1	5	A2	15	B2
6	DIR3	14	B1	6	nc	16	nc
7	A4	15	GAB	7	A3	17	DIR1
8	GND	16	V_{CC}	8	DIR3	18	B1
				9	A4	19	GAB
				10	GND	20	V_{CC}

† Pin numbers shown on logic symbols are for J and N packages only.
nc — no internal connection.

Copyright © 1983 by Texas Instruments Incorporated.

TEXAS INSTRUMENTS
POST OFFICE BOX 225012 • DALLAS, TEXAS 75265

465, 466

OCTAL BUFFERS WITH THREE-STATE OUTPUTS

- P-N-P inputs reduce bus loading
- '465 true outputs
- '466 inverted outputs

typical performance

TYPE	DELAY	MAX SOURCE CURRENT	MAX SINK CURRENT
SN54ALS465	7 ns	−12 mA	12 mA
SN74ALS465	7 ns	−15 mA	24 mA
SN54ALS466	7 ns	−12 mA	12 mA
SN74ALS466	7 ns	−15 mA	24 mA
SN54LS465	11 ns	−1 mA	12 mA
SN74LS465	11 ns	−2.5 mA	24 mA
SN54LS466	8 ns	−1 mA	12 mA
SN74LS466	8 ns	−2.5 mA	24 mA

SN54ALS465 (J,FH) SN74ALS465 (N,FN)
SN54ALS466 (J,FH) SN74ALS466 (N,FN)
SN54LS465 (J) SN74LS465 (J,N)
SN74LS466 (J) SN74LS466 (J,N)

logic symbol, 'ALS465, 'LS465†

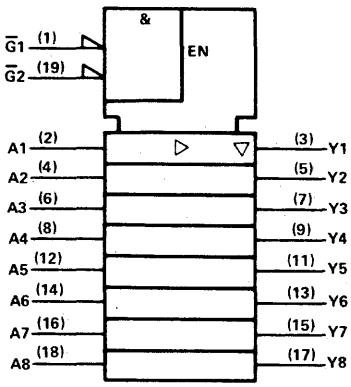

logic symbol, 'ALS466, 'LS468†

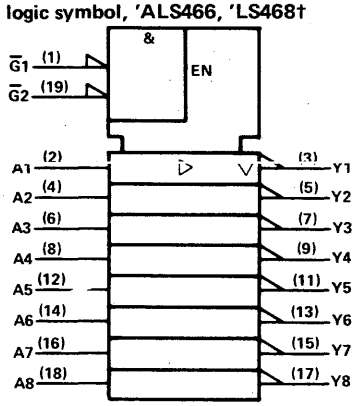

pin assignments

J, N PACKAGES			
1	$\overline{G1}$	11	Y5
2	A1	12	A5
3	Y1	13	Y6
4	A2	14	A6
5	Y2	15	Y7
6	A3	16	A7
7	Y3	17	Y8
8	A4	18	A8
9	Y4	19	$\overline{G2}$
10	GND	20	V_{CC}

'ALS465, 'ALS466

FH, FN PACKAGES			
1	$\overline{G1}$	11	Y5
2	A1	12	A5
3	Y1	13	Y6
4	A2	14	A6
5	Y2	15	Y7
6	A3	16	A7
7	Y3	17	Y8
8	A4	18	A8
9	Y4	19	$\overline{G2}$
10	GND	20	V_{CC}

For chip carrier information, contact the factory.

467, 468

OCTAL BUFFERS WITH THREE-STATE OUTPUTS

- P-N-P inputs reduce bus loading
- '467 true outputs
- '468 inverted outputs

typical performance

TYPE	DELAY	MAX SOURCE CURRENT	MAX SINK CURRENT
SN54ALS467	7 ns	−12 mA	12 mA
SN74ALS467	7 ns	−15 mA	24 mA
SN54ALS468	7 ns	−12 mA	12 mA
SN74ALS468	7 ns	−15 mA	24 mA
SN54LS467	11 ns	−1 mA	12 mA
SN74LS467	11 ns	−2.5 mA	24 mA
SN54LS468	8 ns	−1 mA	12 mA
SN74LS468	8 ns	−2.5 mA	24 mA

SN54ALS467 (J,FH) SN74ALS467 (N,FN)
SN54ALS468 (J,FH) SN74ALS468 (N,FN)
SN54LS467 (J) SN74LS467 (J,N)
SN54LS468 (J) SN74LS468 (J,N)

logic symbol, 'ALS467, 'LS467

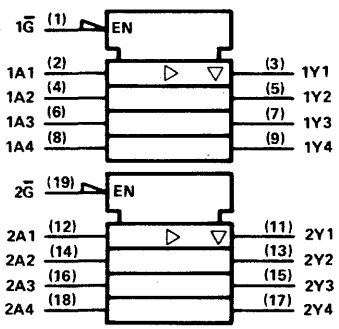

logic symbol, 'ALS468, 'LS468

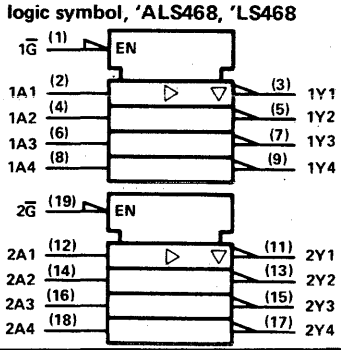

pin assignments

J, N PACKAGES			
1	$1\overline{G}$	11	2Y1
2	1A1	12	2A1
3	1Y1	13	2Y2
4	1A2	14	2A2
5	1Y2	15	2Y3
6	1A3	16	2A3
7	1Y3	17	2Y4
8	1A4	18	2A4
9	1Y4	19	$2\overline{G}$
10	GND	20	V_{CC}

'ALS467, 'ALS468

FH, FN PACKAGES			
1	$1\overline{G}$	11	2Y1
2	1A1	12	2A1
3	1Y1	13	2Y2
4	1A2	14	2A2
5	1Y2	15	2Y3
6	1A3	16	2A3
7	1Y3	17	2Y4
8	1A4	18	2A4
9	1Y4	19	$2\overline{G}$
10	GND	20	V_{CC}

For chip carrier information, contact the factory.

† Pin numbers shown on logic symbols are for J and N packages only.
nc — no internal connection.

Copyright © 1983 by Texas Instruments Incorporated.

481

4-BIT-SLICE CASCADABLE PROCESSOR ELEMENTS

typical performance

TYPE	OPERATION TIME
'LS481	120 ns
'S481	100 ns

SN74LS481 (J,N)
SN74S481 (J,N)

pin assignments

J, N PACKAGES			
1	B1/02	25	WRLFT
2	B1/03	26	WRRT
3	A13	27	XWRLFT
4	A12	28	XWRRT
5	A11	29	D0
6	A10	30	D1
7	OP0	31	DOP3
8	OP1	32	DOP2
9	OP2	33	DOP1
10	OP3	34	DOP0
11	OP7	35	$\overline{\text{INC MC}}$
12	V_{CC}	36	GND
13	OP6	37	$\overline{\text{CCO}}$/OV
14	OP5	38	AOP0
15	OP8	39	AOP1
16	PO9	40	AOP2
17	OP4	41	AOP3
18	$\overline{C_{in}}$	42	AOSEL
19	POS	43	$\overline{\text{INC PC}}$
20	Y/AG	44	$\overline{\text{CCI}}$
21	X/LG	45	CLK
22	$\overline{C_{out}}$	46	BI/O0
23	EQ	47	BI/01
24	$\overline{\text{LDWR}}$	48	BI/O SEL

functional block diagram

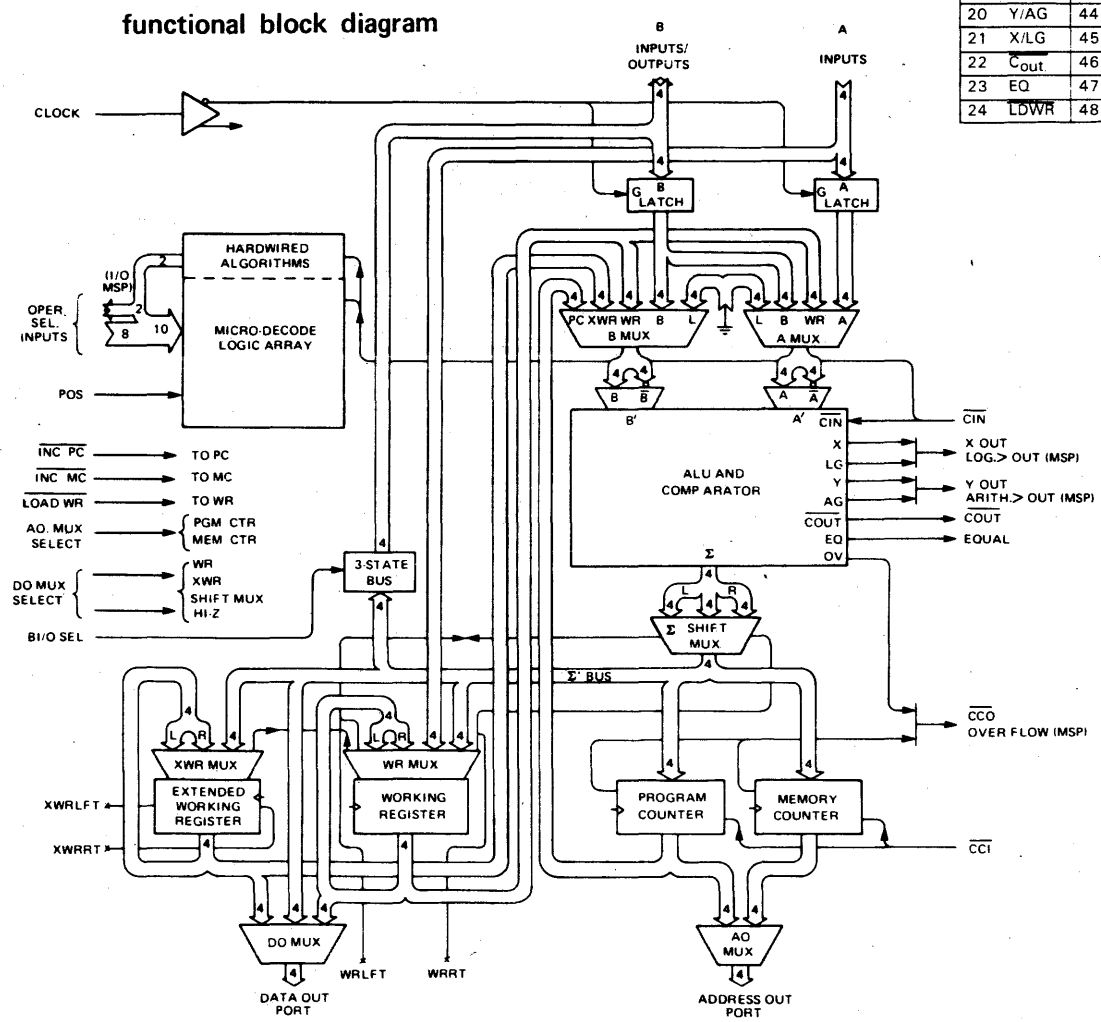

Copyright © 1983 by Texas Instruments Incorporated.

482

4-BIT-SLICE EXPANDABLE CONTROL ELEMENTS

SN54S482 (J,FH)
SN74S482 (J,N,FN)

pin assignments

J, N PACKAGES				FH, FN PACKAGES			
1	S4	11	A0	1	S4	11	A0
2	S3	12	F3	2	S3	12	F3
3	C_{out}	13	F2	3	C_{out}	13	F2
4	C_{in}	14	F1	4	C_{in}	14	F1
5	S1	15	F0	5	S1	15	F0
6	S2	16	$\overline{CLR}$	6	S2	16	$\overline{CLR}$
7	A3	17	S6	7	A3	17	S6
8	A2	18	S5	8	A2	18	S5
9	A1	19	CLK	9	A1	19	CLK
10	GND	20	V_{CC}	10	GND	20	V_{CC}

functional block diagram

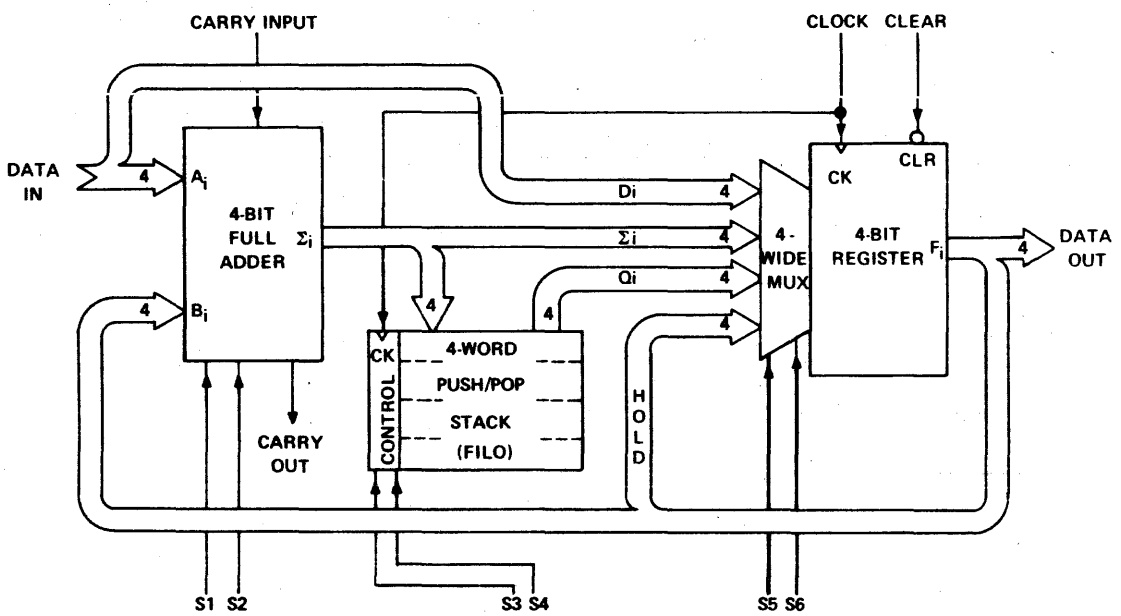

nc — no internal connection.

Copyright © 1983 by Texas Instruments Incorporated.

TEXAS INSTRUMENTS
POST OFFICE BOX 225012 • DALLAS, TEXAS 75265

© IC MASTER 1984

484, 485

BCD-TO-BINARY AND BINARY-TO-BCD CODE CONVERTERS

('484 BCD-to-binary)

('485 binary-to-BCD)

typical performance

TYPE	DELAY TIME PER PKG LEVEL	TOTAL POWER
'S484	45 ns	525 mW
'S485	45 ns	525 mW

SN54S484 (J,FH)
SN54S485 (J,FH)

SN74S484 (J,N,FN)
SN74S485 (J,N,FN)

logic symbol 'S484†

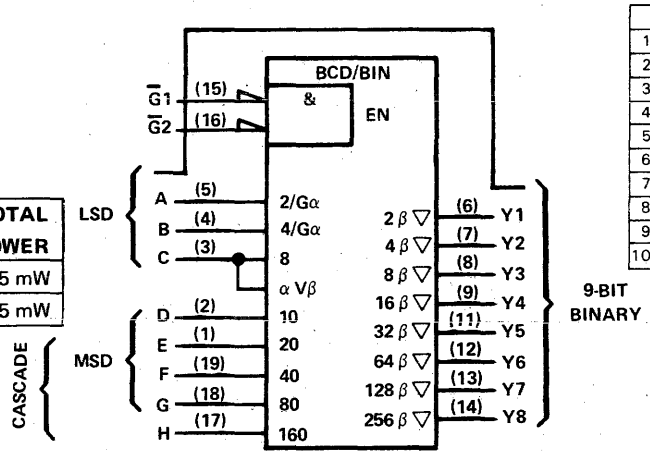

pin assignments

J, N PACKAGES				FH, FN PACKAGES			
1	E	11	Y5	1	E	11	Y5
2	D	12	Y6	2	D	12	Y6
3	C	13	Y7	3	C	13	Y7
4	B	14	Y8	4	B	14	Y8
5	A	15	$\overline{G1}$	5	A	15	$\overline{G1}$
6	Y1	16	$\overline{G2}$	6	Y1	16	$\overline{G2}$
7	Y2	17	H	7	Y2	17	H
8	Y3	18	G	8	Y3	18	G
9	Y4	19	F	9	Y4	19	F
10	GND	20	V_{CC}	10	GND	20	V_{CC}

logic symbol 'S485†

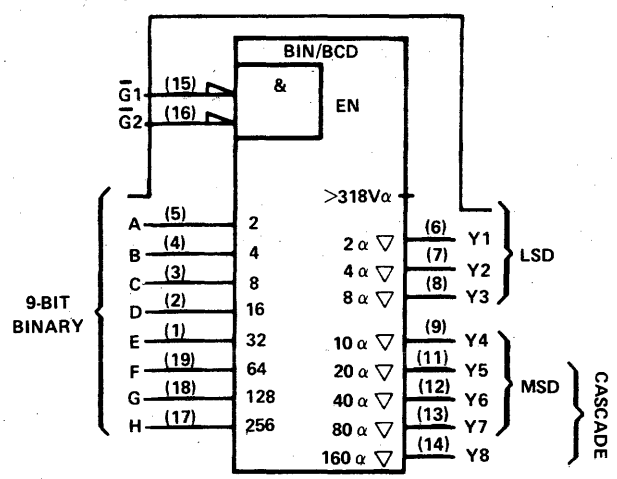

490

DUAL DECADE COUNTERS

typical performance

TYPE	COUNT FREQ	CLEAR	TOTAL POWER
'490	25 MHz	HIGH	225 mW
'LS490	35 MHz	HIGH	75 mW

SN54490 (J,FH) SN74490 (J,N)
SN54LS490 (J,FH) SN74LS490 (J,N,FN)

logic symbol†

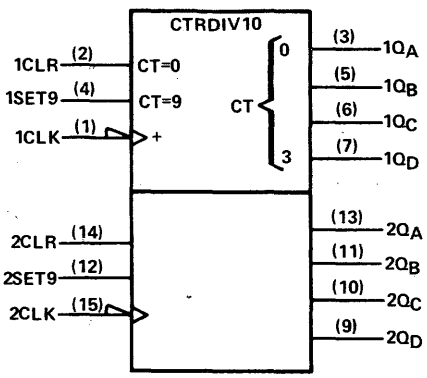

pin assignments

J, N PACKAGES				FH, FN PACKAGES			
1	1CLK	9	$2Q_D$	1	nc	11	nc
2	1CLR	10	$2Q_C$	2	1CLK	12	$2Q_D$
3	$1Q_A$	11	$2Q_B$	3	1CLR	13	$2Q_C$
4	1SET9	12	2SET9	4	$1Q_A$	14	$2Q_B$
5	$1Q_B$	13	$2Q_A$	5	1SET9	15	2SET9
6	$1Q_C$	14	2CLR	6	nc	16	nc
7	$1Q_D$	15	2CLK	7	$1Q_B$	17	$2Q_A$
8	GND	16	V_{CC}	8	$1Q_C$	18	2CLR
				9	$1Q_D$	19	2CLK
				10	GND	20	V_{CC}

† Pin numbers shown on logic symbols are for J and N packages only.
nc — no internal connection.

Copyright © 1983 by Texas Instruments Incorporated.

TEXAS INSTRUMENTS
POST OFFICE BOX 225012 • DALLAS, TEXAS 75265

518,519,520, 521,522

8-BIT IDENTITY COMPARATORS

- Compares two 8-bit words

TYPE	INPUT PULL-UP RESISTOR	OUTPUT FUNCTION AND CONFIGURATION	COMPARE TIME	POWER
ALS518	yes	P = Q open-collector	17.5 ns	50 mW
ALS519	no	P = Q open-collector	17.5 ns	37.5 mW
ALS520	yes	$\overline{P=Q}$ totem-pole	9 ns	50 mW
ALS521	no	$\overline{P=Q}$ totem-pole	9 ns	37.5 mW
ALS522	yes	$\overline{P=Q}$ open-collector	15.5 ns	50 mW

SN54ALS518(J,FH) SN74ALS518(N,FN)
SN54ALS519 (J,FH) SN74ALS519 (N,FN)
SN54ALS520 (J,FH) SN74ALS520 (N,FN)
SN54ALS521 (J,FH) SN74ALS521 (N,FN)
SN54ALS522 (J,FH) SN74ALS522 (N,FN)

logic symbol 'ALS518, 'ALS519†

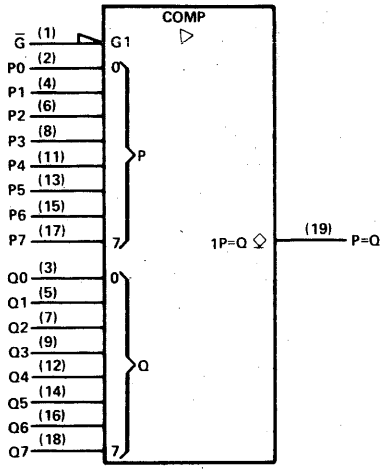

pin assignments, 'ALS518, 'ALS519

J, N PACKAGES				FH, FN PACKAGES			
1	$\overline{G}$	11	P4	1	$\overline{G}$	11	P4
2	P0	12	Q4	2	P0	12	Q4
3	Q0	13	P5	3	Q0	13	P5
4	P1	14	Q5	4	P1	14	Q5
5	Q1	15	P6	5	Q1	15	P6
6	P2	16	Q6	6	P2	16	Q6
7	Q2	17	P7	7	Q2	17	P7
8	P3	18	Q7	8	P3	18	Q7
9	Q3	19	P=Q	9	Q3	19	P=Q
10	GND	20	V_{CC}	10	GND	20	V_{CC}

logic symbol 'ALS520, 'ALS521†

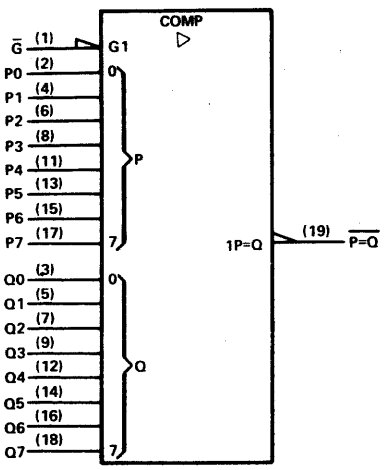

logic symbol 'ALS522†

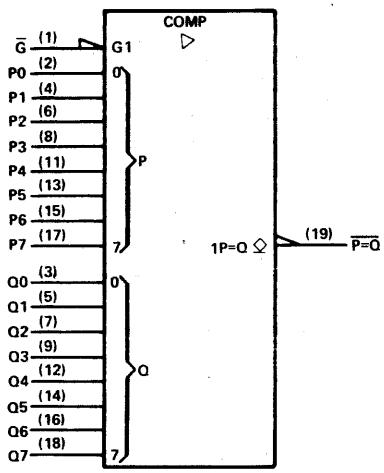

pin assignments, 'ALS520, 'ALS521, 'ALS522

J, N PACKAGES				FH, FN PACKAGES			
1	$\overline{G}$	11	P4	1	$\overline{G}$	11	P4
2	P0	12	Q4	2	P0	12	Q4
3	Q0	13	P5	3	Q0	13	P5
4	P1	14	Q5	4	P1	14	Q5
5	Q1	15	P6	5	Q1	15	P6
6	P2	16	Q6	6	P2	16	Q6
7	Q2	17	P7	7	Q2	17	P7
8	P3	18	Q7	8	P3	18	Q7
9	Q3	19	$\overline{P=Q}$	9	Q3	19	$\overline{P=Q}$
10	GND	20	V_{CC}	10	GND	20	V_{CC}

Copyright © 1983 by Texas Instruments Incorporated.

526

FUSE PROGRAMMABLE 16-BIT IDENTITY COMPARATOR

- Easy programmability
- Can be programmed and verified on most incoming test equipment
- High-speed address recognition

SN54ALS526 (J) SN74ALS526 (N)

logic diagram (positive logic)

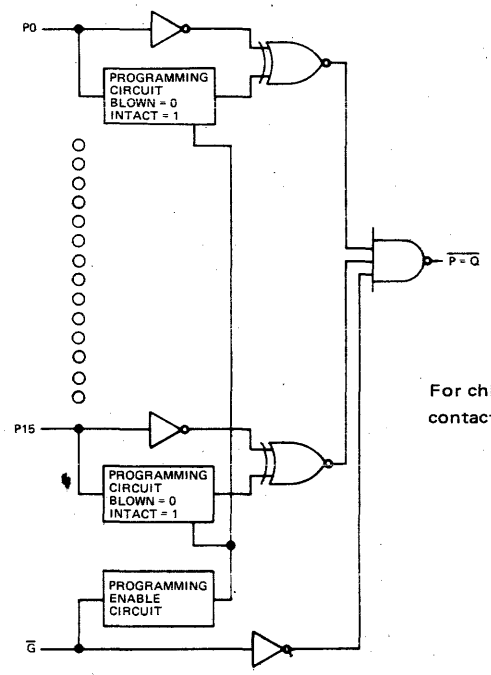

pin assignments

J,N PACKAGES			
1	$\overline{G}$	11	P8
2	P0	12	P9
3	P1	13	P10
4	P2	14	P11
5	P3	15	P12
6	P4	16	P13
7	P5	17	P14
8	P6	18	P15
9	P7	19	$\overline{P = Q}$
10	GND	20	V_{CC}

For chip carrier options and information, contact the factory.

527

FUSE PROGRAMMABLE 8-BIT IDENTITY COMPARATOR AND 4-BIT COMPARATOR

- Easy programmability
- Can be programmed and verified on most incoming test equipment
- High-speed address recognition

SN54ALS527(J) SN74ALS527(N)

logic diagram (positive logic)

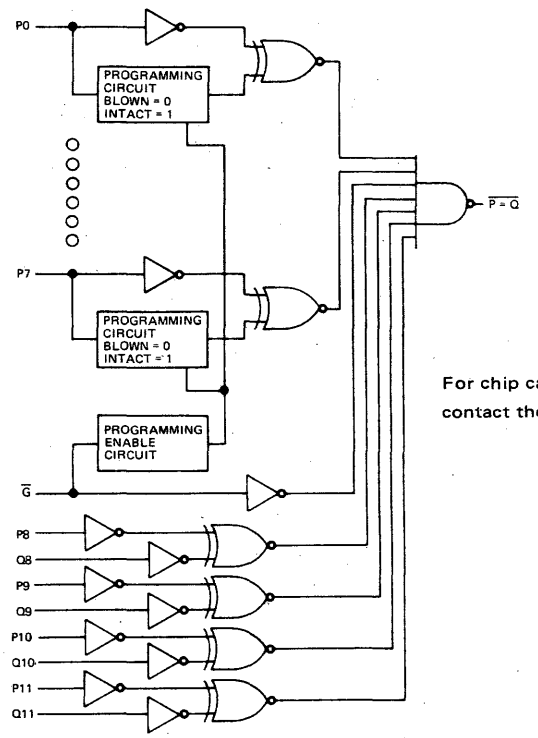

pin assignments

J,N PACKAGES			
1	$\overline{G}$	11	P8
2	P0	12	Q8
3	P1	13	P9
4	P2	14	Q9
5	P3	15	P10
6	P4	16	Q10
7	P5	17	P11
8	P6	18	Q11
9	P7	19	$\overline{P = Q}$
10	GND	20	V_{CC}

For chip carrier options and information, contact the factory.

Copyright © 1983 by Texas Instruments Incorporated.

TEXAS INSTRUMENTS
POST OFFICE BOX 225012 • DALLAS, TEXAS 75265

528

FUSE PROGRAMMABLE 12-BIT IDENTITY COMPARATOR

- Easy programmability
- Can be programmed and verified on most incoming test equipment
- High-speed address recognition

SN54ALS528(J) SN74ALS528 (N)

logic diagram (positive logic)

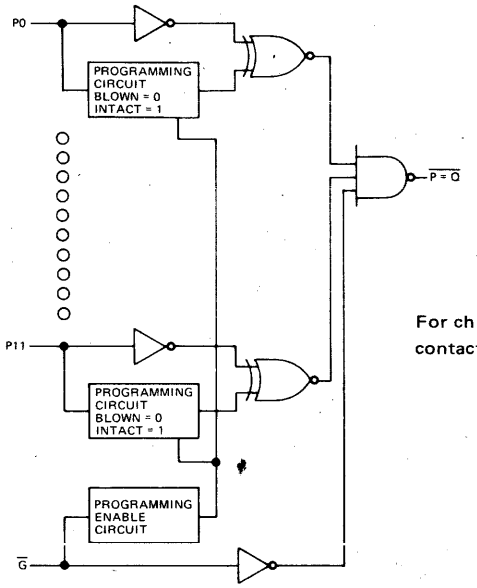

pin assignments

J,N PACKAGES			
1	$\overline{G}$	9	P6
2	P0	10	P7
3	P1	11	P8
4	P2	12	P9
5	P3	13	P10
6	P4	14	P11
7	P5	15	$\overline{P = Q}$
8	GND	16	V_{CC}

For chip carrier options and information, contact the factory.

Copyright © 1983 by Texas Instruments Incorporated.

533

OCTAL D-TYPE TRANSPARENT LATCHES

- Three-state buffer-type outputs drive bus lines directly
- Inverting outputs

typical performance

TYPE	OUT-PUTS	DELAY	TOTAL POWER
ALS533	$\overline{Q}$	10 ns	60 mW
AS533	$\overline{Q}$	5 ns	328 mW

SN54ALS533 (J,FH) SN74ALS533 (N,FN)
SN54AS533 (J,FH) SN74AS533 (N,FN)

logic symbol†

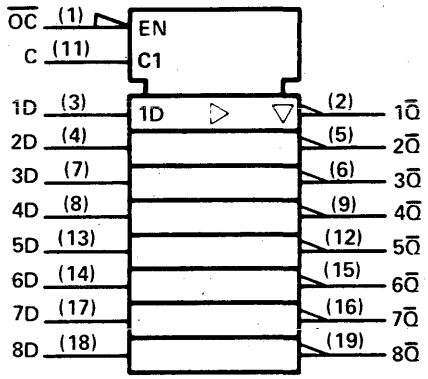

pin assignments

J, N PACKAGES				FH, FN PACKAGES			
1	$\overline{OC}$	11	C	1	$\overline{OC}$	11	C
2	$1\overline{Q}$	12	$5\overline{Q}$	2	$1\overline{Q}$	12	$5\overline{Q}$
3	1D	13	5D	3	1D	13	5D
4	2D	14	6D	4	2D	14	6D
5	$2\overline{Q}$	15	$6\overline{Q}$	5	$2\overline{Q}$	15	$6\overline{Q}$
6	$3\overline{Q}$	16	$7\overline{Q}$	6	$3\overline{Q}$	16	$7\overline{Q}$
7	3D	17	7D	7	3D	17	7D
8	4D	18	8D	8	4D	18	8D
9	$4\overline{Q}$	19	$8\overline{Q}$	9	$4\overline{Q}$	19	$8\overline{Q}$
10	GND	20	V_{CC}	10	GND	20	V_{CC}

534

OCTAL D-TYPE EDGE-TRIGGERED FLIP-FLOPS

- Three-state buffer-type outputs drive bus lines directly
- Inverting outputs

logic symbol†

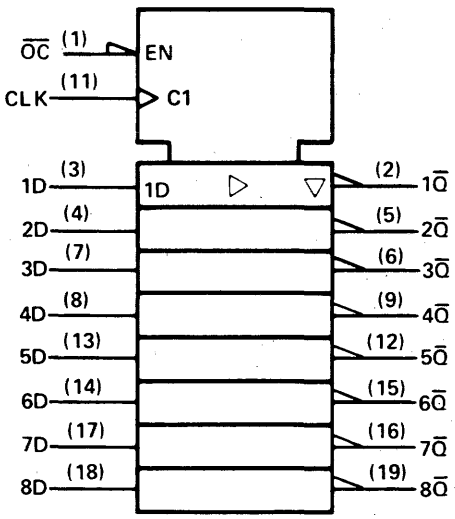

pin assignments

J, N PACKAGES				FH, FN PACKAGES			
1	$\overline{OC}$	11	CLK	1	$\overline{OC}$	11	CLK
2	$1\overline{Q}$	12	$5\overline{Q}$	2	$1\overline{Q}$	12	$5\overline{Q}$
3	1D	13	5D	3	1D	13	5D
4	2D	14	6D	4	2D	14	6D
5	$2\overline{Q}$	15	$6\overline{Q}$	5	$2\overline{Q}$	15	$6\overline{Q}$
6	$3\overline{Q}$	16	$7\overline{Q}$	6	$3\overline{Q}$	16	$7\overline{Q}$
7	3D	17	7D	7	3D	17	7D
8	4D	18	8D	8	4D	18	8D
9	$4\overline{Q}$	19	$8\overline{Q}$	9	$4\overline{Q}$	19	$8\overline{Q}$
10	GND	20	V_{CC}	10	GND	20	V_{CC}

typical performance

TYPE	F-MAX	PWR/ F/F	DATA TIMES	
			SET-UP	HOLD
'ALS534	50 MHz	10.4 mW	10 ns ↑	0 ns ↑
'AS534	165 MHz	51 mW	3 ns ↑	3 ns ↑

SN54ALS534 (J,FH) SN74ALS534 (N,FN)
SN54AS534 (J,FH) SN74AS534 (N,FN)

†Pin numbers shown on logic symbols are for J and N packages only.

Copyright © 1983 by Texas Instruments Incorporated.

538

3- TO 8-LINE DECODERS/ DEMULTIPLEXERS

- Three-state outputs
- Output polarity control
- Multiple enables for expansion

typical performance

TYPE	SELECT TIME	ENABLE TIME	TOTAL POWER
'ALS538			

SN54ALS538 (J,FH) SN74ALS538 (N, FN)

logic symbol†

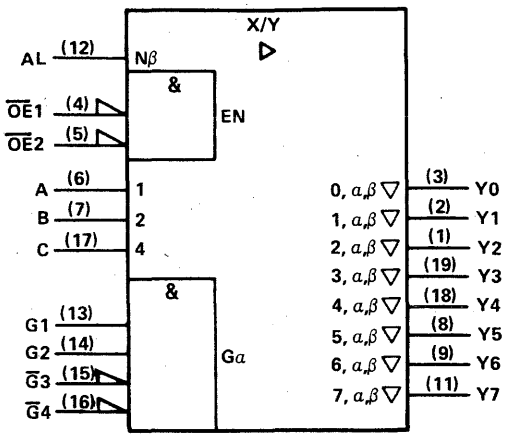

OR

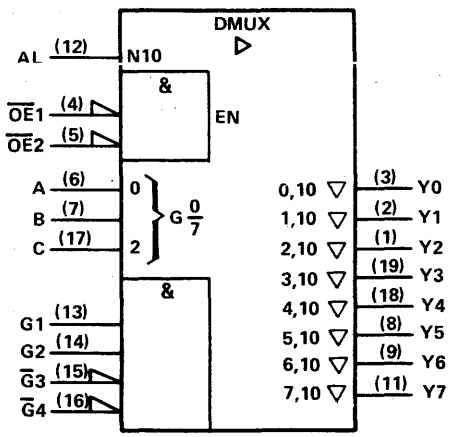

pin assignments

J, N PACKAGES			
1	Y2	11	Y7
2	Y1	12	AL
3	Y0	13	G1
4	$\overline{OE1}$	14	G2
5	$\overline{OE2}$	15	$\overline{G3}$
6	A	16	$\overline{G4}$
7	B	17	C
8	Y5	18	Y4
9	Y6	19	Y3
10	GND	20	V_{CC}

FH, FN PACKAGES			
1	Y2	11	Y7
2	Y1	12	AL
3	Y0	13	G1
4	$\overline{OE1}$	14	G2
5	$\overline{OE2}$	15	$\overline{G3}$
6	A	16	$\overline{G4}$
7	B	17	C
8	Y5	18	Y4
9	Y6	19	Y3
10	GND	20	V_{CC}

† Pin numbers shown on logic symbols are for J and N packages only.
nc — no internal connection.

Copyright © 1983 by Texas Instruments Incorporated.

TEXAS INSTRUMENTS
POST OFFICE BOX 225012 • DALLAS, TEXAS 75265

© IC MASTER 1984

539

2- TO 4-LINE DECODERS/ DEMULTIPLEXERS

- Three-state outputs
- Output polarity control

typical performance

TYPE	SELECT TIME	ENABLE TIME	TOTAL POWER
'ALS539			

SN54ALS539 (J,FH) SN74ALS539 (N, FN)

logic symbols†

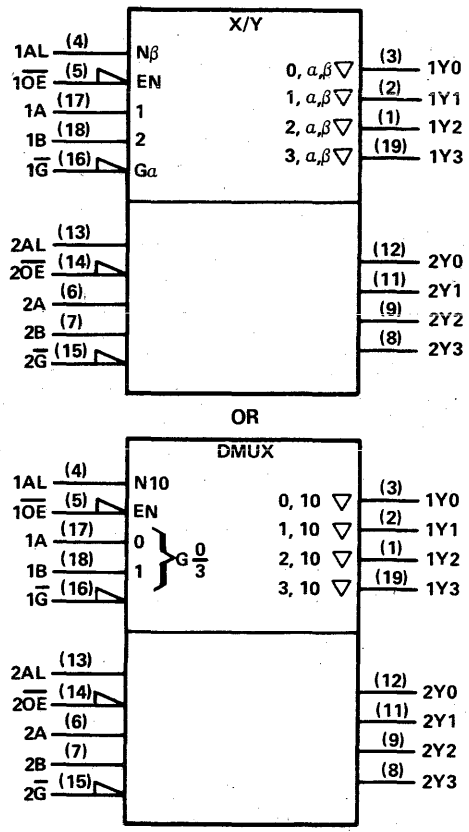

pin assignments

J, N PACKAGES			
1	1Y2	11	2Y1
2	1Y1	12	2Y0
3	1Y0	13	2AL
4	1AL	14	2$\overline{OE}$
5	1$\overline{OE}$	15	2$\overline{G}$
6	2A	16	1$\overline{G}$
7	2B	17	1A
8	2Y3	18	1B
9	2Y2	19	1Y3
10	GND	20	V_{CC}

FH, FN PACKAGES			
1	1Y2	11	2Y1
2	1Y1	12	2Y0
3	1Y0	13	2AL
4	1AL	14	2$\overline{OE}$
5	1$\overline{OE}$	15	2$\overline{G}$
6	2A	16	1$\overline{G}$
7	2B	17	1A
8	2Y3	18	1B
9	2Y2	19	1Y3
10	GND	20	V_{CC}

† Pin numbers shown on logic symbols are for J and N packages only.
nc — no internal connection.

Copyright © 1983 by Texas Instruments Incorporated.

540, 541

OCTAL BUFFERS AND LINE DRIVERS

- Three-state output drives bus lines or buffer memory address registers
- 'LS540 for inverted data output
- 'LS541 for true data output

typical performance

TYPE	DELAY	MAX SOURCE CURRENT	MAX SINK CURRENT
SN54ALS540	6 ns	−12 mA	12 mA
SN74ALS540	6 ns	−15 mA	24 mA
SN54ALS541	6 ns	−12 mA	12 mA
SN74ALS541	6 ns	−15 mA	24 mA
SN54LS540	9 ns	−12 mA	12 mA
SN74LS540	9.5 ns	−15 mA	24 mA
SN54LS541	9 ns	−12 mA	12 mA
SN74LS541	9.5 ns	−15 mA	24 mA

SN54ALS540 (J,FH) SN74ALS540 (N,FN)
SN54ALS541 (J,FH) SN74ALS541 (N,FN)
SN54LS540 (J,FH) SN74LS540 (J,N,FN)
SN54LS541 ((J,FH) SN74LS541 (J,N,FN)

logic symbol, 'LS540, 'ALS540†

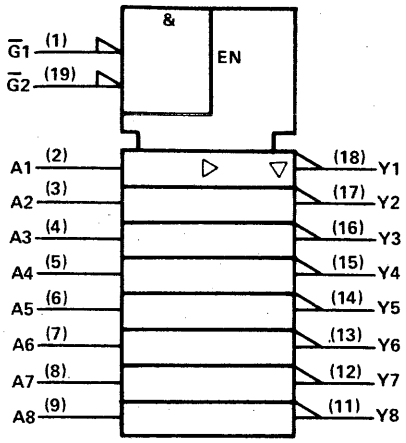

logic symbol, 'LS541, 'ALS541†

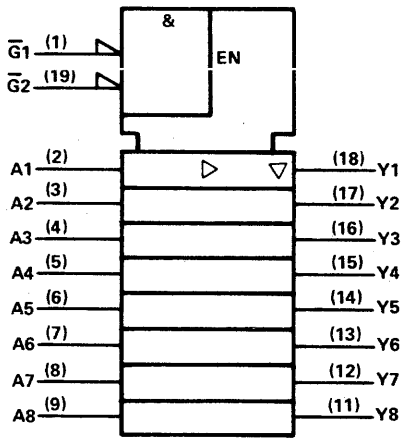

pin assignments

J, N PACKAGES				FH, FN PACKAGES			
1	$\overline{G1}$	11	Y8	1	$\overline{G1}$	11	Y8
2	A1	12	Y7	2	A1	12	Y7
3	A2	13	Y6	3	A2	13	Y6
4	A3	14	Y5	4	A3	14	Y5
5	A4	15	Y4	5	A4	15	Y4
6	A5	16	Y3	6	A5	16	Y3
7	A6	17	Y2	7	A6	17	Y2
8	A7	18	Y1	8	A7	18	Y1
9	A8	19	$\overline{G2}$	9	A8	19	$\overline{G2}$
10	GND	20	V_{CC}	10	GND	20	V_{CC}

† Pin numbers shown on logic symbols are for J and N packages only.
nc — no internal connection.

Copyright © 1983 by Texas Instruments Incorporated.

560

SYNCHRONOUS 4-BIT COUNTERS

(decade, synchronous and asynchronous clear)

typical performance

TYPE	COUNT FREQ	CLEAR	TOTAL POWER
'ALS560A	30 MHz	Low	100 mW

SN54ALS560A (J,FH) SN74ALS560A (N,FN)

logic symbol†

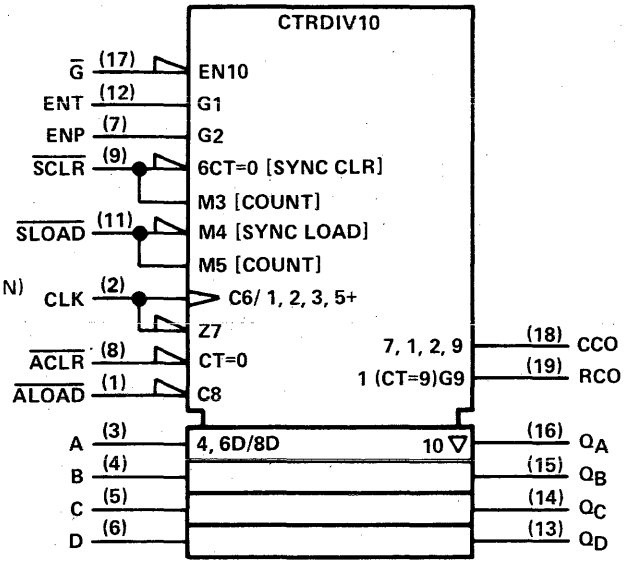

pin assignments

J, N PACKAGES			
1	ALOAD	11	SLOAD
2	CLK	12	ENT
3	A	13	Q_D
4	B	14	Q_C
5	C	15	Q_B
6	D	16	Q_A
7	ENP	17	$\overline{G}$
8	ACLR	18	CCO
9	SCLR	19	RCO
10	GND	20	V_{CC}

FH, FN PACKAGES			
1	ALOAD	11	SLOAD
2	CLK	12	ENT
3	A	13	Q_D
4	B	14	Q_C
5	C	15	Q_B
6	D	16	Q_A
7	ENP	17	$\overline{G}$
8	ACLR	18	CCO
9	SCLR	19	RCO
10	GND	20	V_{CC}

561

SYNCHRONOUS 4-BIT COUNTERS

(binary, synchronous and asynchronous clear)

typical performance

TYPE	COUNT FREQ	CLEAR	TOTAL POWER
'ALS561A	40 MHz	Low	100 mW

SN54ALS561A (J,FH) AN74ALS561A (N,FN)

logic symbol†

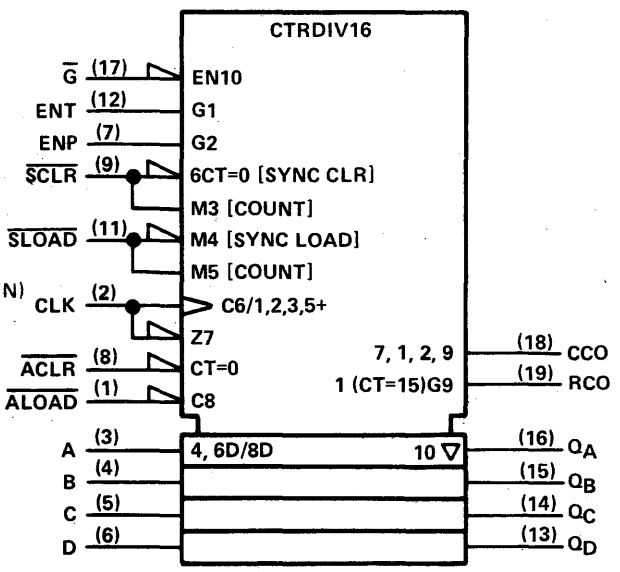

pin assignments

J, N PACKAGES			
1	ALOAD	11	SLOAD
2	CLK	12	ENT
3	A	13	Q_D
4	B	14	Q_C
5	C	15	Q_B
6	D	16	Q_A
7	ENP	17	$\overline{G}$
8	ACLR	18	CCO
9	SCLR	19	RCO
10	GND	20	V_{CC}

FH, FN PACKAGES			
1	ALOAD	11	SLOAD
2	CLK	12	ENT
3	A	13	Q_D
4	B	14	Q_C
5	C	15	Q_B
6	D	16	Q_A
7	ENP	17	$\overline{G}$
8	ACLR	18	CCO
9	SCLR	19	RCO
10	GND	20	V_{CC}

Pin numbers shown on logic symbols are for J and N packages only.

Copyright © 1983 by Texas Instruments Incorporated.

563

OCTAL D-TYPE TRANSPARENT LATCHES WITH INVERTED OUTPUTS

- Buffer-type outputs drive bus lines directly
- Inverted outputs

typical performance

TYPE	DELAY	TOTAL POWER
'ALS563	11 ns	67.5 mW

SN54ALS563 (J,FH) SN74ALS563 (N,FN)

logic symbol†

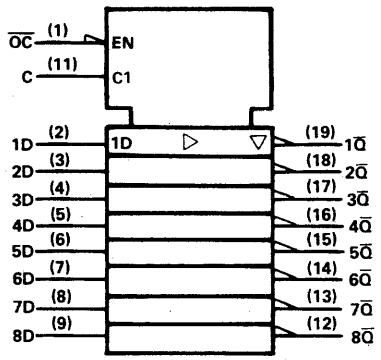

pin assignments

J, N PACKAGES				FH, FN PACKAGES			
1	OC	11	C	1	OC	11	C
2	1D	12	8Q̄	2	1D	12	8Q̄
3	2D	13	7Q̄	3	2D	13	7Q̄
4	3D	14	6Q̄	4	3D	14	6Q̄
5	4D	15	5Q̄	5	4D	15	5Q̄
6	5D	16	4Q̄	6	5D	16	4Q̄
7	6D	17	3Q̄	7	6D	17	3Q̄
8	7D	18	2Q̄	8	7D	18	2Q̄
9	8D	19	1Q̄	9	8D	19	1Q̄
10	GND	20	V_{CC}	10	GND	20	V_{CC}

564

OCTAL D-TYPE EDGE-TRIGGERED FLIP-FLOPS

- Buffer-type outputs drive bus lines directly
- Inverted outputs

typical performance

TYPE	f_{max}	PWR/ F-F
'ALS564	50 MHz	8.4 mW

SN54ALS564 (J,FH) SN74ALS564 (N,FN)

logic symbol†

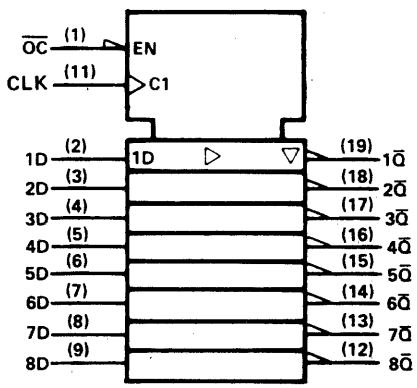

pin assignment

J, N PACKAGES				FH, FN PACKAGES			
1	OC	11	CLK	1	OC	11	CLK
2	1D	12	8Q̄	2	1D	12	8Q̄
3	2D	13	7Q̄	3	2D	13	7Q̄
4	3D	14	6Q̄	4	3D	14	6Q̄
5	4D	15	5Q̄	5	4D	15	5Q̄
6	5D	16	4Q̄	6	5D	16	4Q̄
7	6D	17	3Q̄	7	6D	17	3Q̄
8	7D	18	2Q̄	8	7D	18	2Q̄
9	8D	19	1Q̄	9	8D	19	1Q̄
10	GND	20	V_{CC}	10	GND	20	V_{CC}

†Pin numbers shown on logic symbols are for J and N packages only.

Copyright © 1983 by Texas Instruments Incorporated.

568

SYNCHRONOUS 4-BIT UP/DOWN COUNTERS

(decade, synchronous and asynchronous clear)

typical performance

TYPE	COUNT FREQ	CLEAR	TOTAL POWER
'ALS568A	30 MHz	Low	93 mW

SN54ALS568A (J,FH) SN74ALS568A (N,FN)

logic symbol†

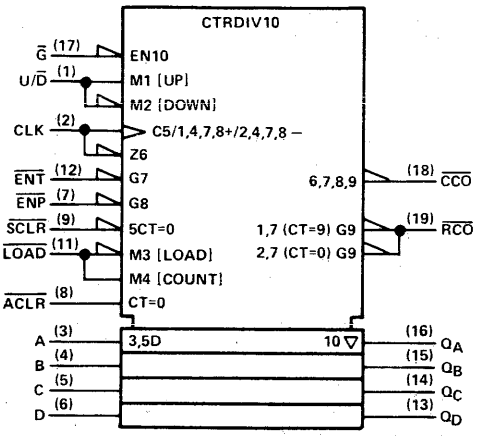

pin assignment

J, N PACKAGES				FH, FN PACKAGES			
1	U/D̅	11	LOAD̅	1	U/D̅	11	LOAD̅
2	CLK	12	ENT̅	2	CLK	12	ENT̅
3	A	13	Q_D	3	A	13	Q_D
4	B	14	Q_C	4	B	14	Q_C
5	C	15	Q_B	5	C	15	Q_B
6	D	16	Q_A	6	D	16	Q_A
7	ENP̅	17	G̅	7	ENP̅	17	G̅
8	ACLR̅	18	CCO̅	8	ACLR̅	18	CCO̅
9	SCLR̅	19	RCO̅	9	SCLR̅	19	RCO̅
10	GND	20	V_{CC}	10	GND	20	V_{CC}

569

SYNCHRONOUS 4-BIT UP/DOWN COUNTERS

(binary, synchronous and asynchronous clear)

typical performance

TYPE	COUNT FREQ	CLEAR	TOTAL POWER
ALS569A	40 MHz	Low	93 mW

SN54ALS569A (J,FH) SN74ALS569A (N,FN)

logic symbol†

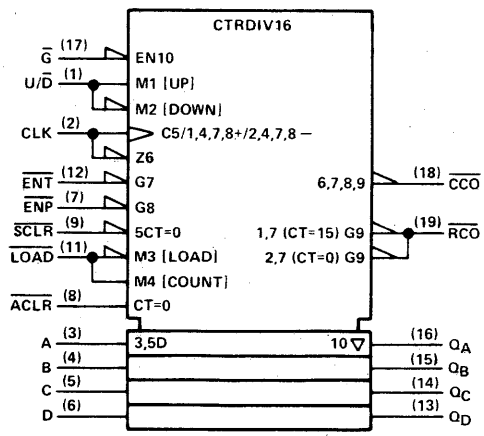

pin assignment

J, N PACKAGES				FH, FN PACKAGES			
1	U/D̅	11	LOAD̅	1	U/D̅	11	LOAD̅
2	CLK	12	ENT̅	2	CLK	12	ENT̅
3	A	13	Q_D	3	A	13	Q_D
4	B	14	Q_C	4	B	14	Q_C
5	C	15	Q_B	5	C	15	Q_B
6	D	16	Q_A	6	D	16	Q_A
7	ENP̅	17	G̅	7	ENP̅	17	G̅
8	ACLR̅	18	CCO̅	8	ACLR̅	18	CCO̅
9	SCLR̅	19	RCO̅	9	SCLR̅	19	RCO̅
10	GND	20	V_{CC}	10	GND	20	V_{CC}

†Pin numbers shown on logic symbols are for J and N packages only.

Copyright © 1983 by Texas Instruments Incorporated.

573

OCTAL D-TYPE TRANSPARENT LATCHES

- Functionally equivalent to 'LS373 and 'S373
- Three-state buffer-type outputs drive bus lines directly
- Approximately half the power of 'LS373

typical performance

TYPE	OUT-PUTS	DELAY	TOTAL POWER
'ALS573	Q	11 ns	67.5 mW
'AS573	Q	4.5 ns	290 mW

SN54ALS573 (J,FH) SN74ALS573 (N,FN)
SN54AS573 (J,FH) SN74AS573 (N,FN)

logic symbol†

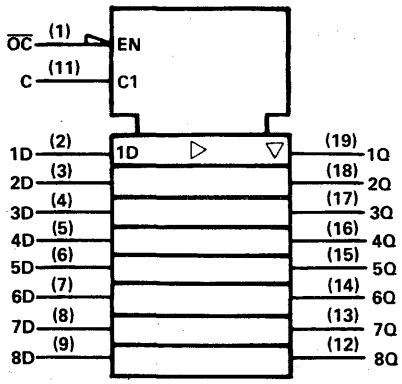

pin assignments

J, N PACKAGES				FH, FN PACKAGES			
1	$\overline{OC}$	11	C	1	$\overline{OC}$	11	C
2	1D	12	8Q	2	1D	12	8Q
3	2D	13	7Q	3	2D	13	7Q
4	3D	14	6Q	4	3D	14	6Q
5	4D	15	5Q	5	4D	15	5Q
6	5D	16	4Q	6	5D	16	4Q
7	6D	17	3Q	7	6D	17	3Q
8	7D	18	2Q	8	7D	18	2Q
9	8D	19	1Q	9	8D	19	1Q
10	GND	20	V_{CC}	10	GND	20	V_{CC}

574

OCTAL D-TYPE EDGE-TRIGGERED FLIP-FLOPS

- Functionally equivalent to 'LS374 and 'S374
- Three-state buffer-type outputs drive bus lines directly
- Approximately half the power of 'LS374

typical performance

TYPE	f_{max}	PWR/ F-F	DATA TIMES SET-UP	DATA TIMES HOLD
'ALS574	50 MHz	8.44 mW	10 ns↑	4 ns↑
'AS574	160 MHz	51 mW	3 ns↑	3 ns↑

↑ Rising edge of clock pulse

SN54ALS574 (J,FH) SN74ALS574 (N,FN)
SN54AS574 (J,FH) SN74AS574 (N,FN)

logic symbol†

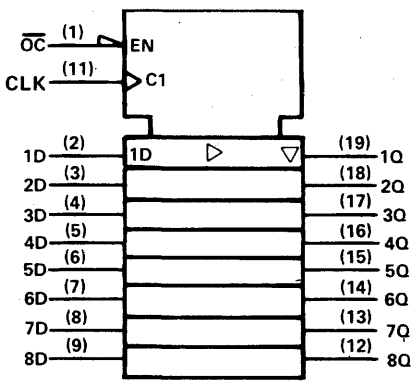

pin assignments

J, N PACKAGES				FH, FN PACKAGES			
1	$\overline{OC}$	11	CLK	1	$\overline{OC}$	11	CLK
2	1D	12	8Q	2	1D	12	8Q
3	2D	13	7Q	3	2D	13	7Q
4	3D	14	6Q	4	3D	14	6Q
5	4D	15	5Q	5	4D	15	5Q
6	5D	16	4Q	6	5D	16	4Q
7	6D	17	3Q	7	6D	17	3Q
8	7D	18	2Q	8	7D	18	2Q
9	8D	19	1Q	9	8D	19	1Q
10	GND	20	V_{CC}	10	GND	20	V_{CC}

575

OCTAL D-TYPE EDGE-TRIGGERED FLIP-FLOPS

- 3-state buffer-type outputs drive bus-lines directly
- Noninverting outputs

typical performance

TYPE	f_{max}	PWR/ F-F	DATA TIMES SET-UP	DATA TIMES HOLD
'ALS575	50 MHz	8.4 mW	10 ns↑	4 ns↑
'AS575	160 MHz	47 mW	3 ns↑	3 ns↑

↑ Rising edge of clock pulse

SN54ALS575 (J,FH) SN74ALS575 (N,FN)
SN54AS575 (J,FH) SN74AS575 (N,FN)

logic symbol, 'ALS575, 'AS575

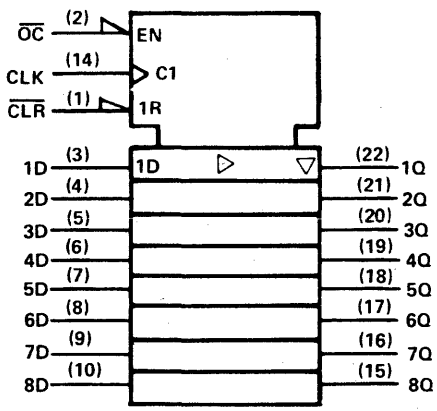

pin assignment

J, N PACKAGES				FH, FN PACKAGES			
1	$\overline{CLR}$	13	nc	1	nc	15	nc
2	$\overline{OC}$	14	CLK	2	$\overline{CLR}$	16	nc
3	1D	15	8Q	3	$\overline{OC}$	17	CLK
4	2D	16	7Q	4	1D	18	8Q
5	3D	17	6Q	5	2D	19	7Q
6	4D	18	5Q	6	3D	20	6Q
7	5D	19	4Q	7	4D	21	5Q
8	6D	20	3Q	8	nc	22	nc
9	7D	21	2Q	9	5D	23	4Q
10	8D	22	1Q	10	6D	24	3Q
11	nc	23	nc	11	7D	25	2Q
12	GND	24	V_{CC}	12	8D	26	1Q
				13	nc	27	nc
				14	GND	28	V_{CC}

† Pin numbers shown on logic symbols are for J and N packages only.
nc — no internal connection.

Copyright © 1983 by Texas Instruments Incorporated.

576

OCTAL D-TYPE EDGE-TRIGGERED FLIP-FLOPS

- Buffer-type outputs drive bus lines directly
- Inverted outputs

typical performance

TYPE	f_{max}	PWR/ F-F
'ALS576	50MHz	8.4 mW
'AS576	160MHz	

SN54ALS576 (J,FH) SN74ALS576 (N,FN)
SN54AS576 (J,FH) SN74AS576 (N,FN)

logic symbol†

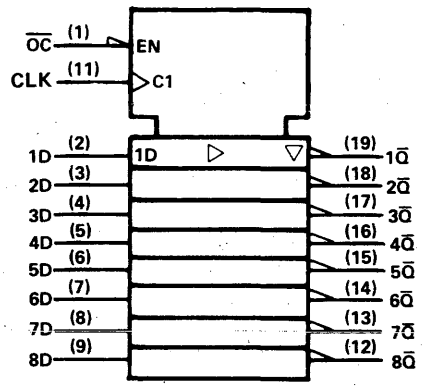

pin assignments

J, N PACKAGES				FH, FN PACKAGES			
1	OC	11	CLK	1	OC	11	CLK
2	1D	12	8Q̄	2	1D	12	8Q̄
3	2D	13	7Q̄	3	2D	13	7Q̄
4	3D	14	6Q̄	4	3D	14	6Q̄
5	4D	15	5Q̄	5	4D	15	5Q̄
6	5D	16	4Q̄	6	5D	16	4Q̄
7	6D	17	3Q̄	7	6D	17	3Q̄
8	7D	18	2Q̄	8	7D	18	2Q̄
9	8D	19	1Q̄	9	8D	19	1Q̄
10	GND	20	V_{CC}	10	GND	20	V_{CC}

577

OCTAL D-TYPE EDGE-TRIGGERED FLIP-FLOPS

- Buffer-type outputs drive bus lines directly
- Inverted outputs
- Synchronous clear

logic symbol, 'ALS577, 'AS577

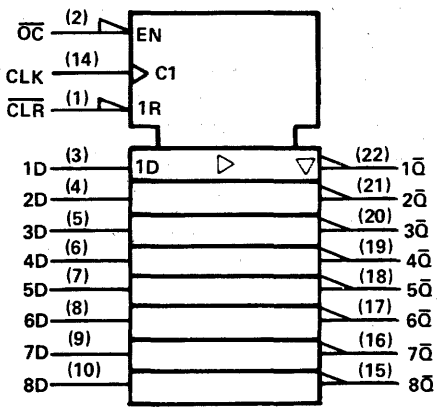

pin assignment

J, N PACKAGES				FH, FN PACKAGES			
1	CLR	13	nc	1	nc	15	nc
2	OC	14	CLK	2	CLR	16	nc
3	1D	15	8Q̄	3	OC	17	CLK
4	2D	16	7Q̄	4	1D	18	8Q̄
5	3D	17	6Q̄	5	2D	19	7Q̄
6	4D	18	5Q̄	6	3D	20	6Q̄
7	5D	19	4Q̄	7	4D	21	5Q̄
8	6D	20	3Q̄	8	nc	22	nc
9	7D	21	2Q̄	9	5D	23	4Q̄
10	8D	22	1Q̄	10	6D	24	3Q̄
11	nc	23	nc	11	7D	25	2Q̄
12	GND	24	V_{CC}	12	8D	26	1Q̄
				13	nc	27	nc
				14	GND	28	V_{CC}

typical performance

TYPE	f_{max}	POWER/ F-F	DATA TIMES	
			SET-UP	HOLD
'ALS577	50 MHz	8.4 mW	10 ns†	4 ns†
'AS577	160 MHz			

†Rising edge of clock pulse
SN54ALS577 (J,FH) SN74ALS577(N,FN)
SN54AS577 (J,FH) SN74AS577(N,FN)

†Pin numbers shown on logic symbols are for J and N packages only.
nc no internal connection.

Copyright © 1983 by Texas Instruments Incorporated.

TEXAS INSTRUMENTS
POST OFFICE BOX 225012 • DALLAS, TEXAS 75265

580

OCTAL D-TYPE TRANSPARENT LATCHES WITH INVERTED OUTPUTS

- Three-state buffer-type outputs drive bus lines directly

typical performance

TYPE	DELAY	TOTAL POWER
'ALS580	11 ns	67.5 mW
'AS580	5.5 ns	330 mW

SN54ALS580 (J,FH) SN74ALS580 (N,FN)
SN54AS580 (J,FH) SN74AS580 (N,FN)

logic symbol†

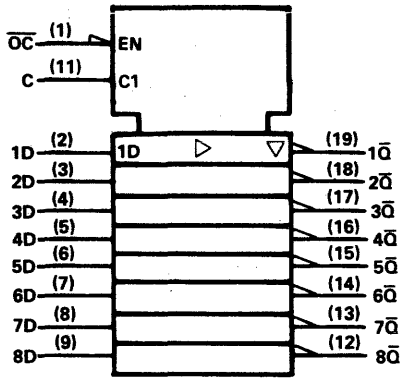

pin assignments

J, N PACKAGES				FH, FN PACKAGES			
1	$\overline{OC}$	11	C	1	$\overline{OC}$	11	C
2	1D	12	$8\overline{Q}$	2	1D	12	$8\overline{Q}$
3	2D	13	$7\overline{Q}$	3	2D	13	$7\overline{Q}$
4	3D	14	$6\overline{Q}$	4	3D	14	$6\overline{Q}$
5	4D	15	$5\overline{Q}$	5	4D	15	$5\overline{Q}$
6	5D	16	$4\overline{Q}$	6	5D	16	$4\overline{Q}$
7	6D	17	$3\overline{Q}$	7	6D	17	$3\overline{Q}$
8	7D	18	$2\overline{Q}$	8	7D	18	$2\overline{Q}$
9	8D	19	$1\overline{Q}$	9	8D	19	$1\overline{Q}$
10	GND	20	V_{CC}	10	GND	20	V_{CC}

590, 591

8-BIT BINARY COUNTERS WITH OUTPUT REGISTERS

- 'LS590 has three-state register outputs
- 'LS591 has open-collector register outputs
- Counter has direct clear

typical performance

TYPE	MAX COUNT FREQ	PARALLEL LOAD	CLEAR	TOTAL POWER
'LS590	20 MHz	SYNC	SYNC-L	166.5 mW
'LS591	20 MHz	SYNC	SYNC-L	155 mW

SN54LS590 (J,FH) SN74LS590 (J,N,FN)
SN54LS591 (J,FH) SN74LS591 (J,N,FN)

logic symbol, 'LS590†

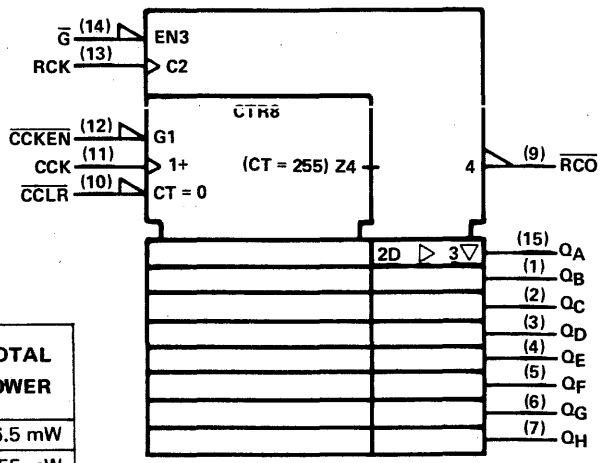

pin assignments

J, N PACKAGES			
1	Q_B	9	$\overline{RCO}$
2	Q_C	10	$\overline{CCLR}$
3	Q_D	11	CCK
4	Q_E	12	$\overline{CCKEN}$
5	Q_F	13	RCK
6	Q_G	14	$\overline{G}$
7	Q_H	15	Q_A
8	GND	16	V_{CC}

FH, FN PACKAGES			
1	nc	11	nc
2	Q_B	12	$\overline{RCO}$
3	Q_C	13	$\overline{CCLR}$
4	Q_D	14	CCK
5	Q_E	15	$\overline{CCKEN}$
6	nc	16	nc
7	Q_F	17	RCK
8	Q_G	18	$\overline{G}$
9	Q_H	19	Q_A
10	GND	20	V_{CC}

logic symbol, 'LS591†

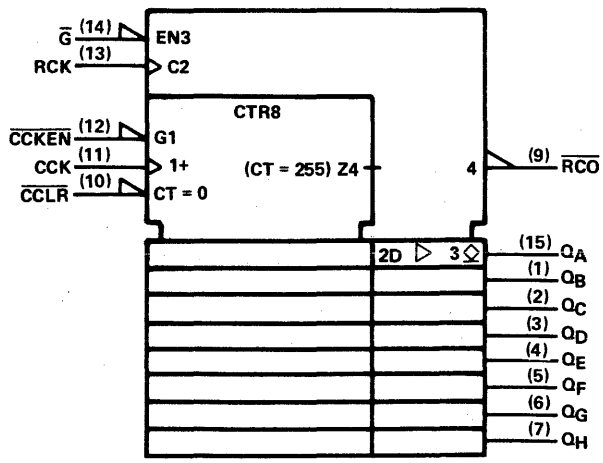

† Pin numbers shown on logic symbols are for J and N packages only.
nc — no internal connection.

Copyright © 1983 by Texas Instruments Incorporated.

TEXAS INSTRUMENTS
POST OFFICE BOX 225012 • DALLAS, TEXAS 75265

© IC MASTER 1984

592

8-BIT BINARY COUNTERS WITH INPUT REGISTERS

- Has parallel register inputs
- Counter has direct overriding load and clear
- Guaranteed counter frequency . . . dc to 20 MHz

typical performance

MAX COUNT FREQ	PARALLEL LOAD	CLEAR	TOTAL POWER
20 MHz	SYNC	SYNC-L	130 mW

SN54LS592 (J,FH)
SN74LS592 (J,N,FN)

logic symbol†

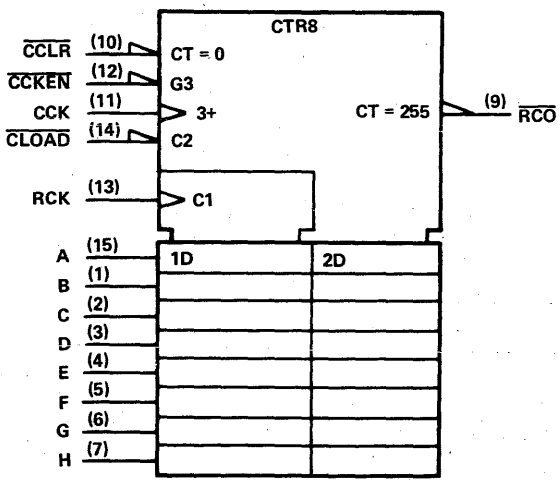

pin assignments

J, N PACKAGES			
1	B	9	$\overline{RCO}$
2	C	10	$\overline{CCLR}$
3	D	11	CCK
4	E	12	$\overline{CCKEN}$
5	F	13	RCK
6	G	14	$\overline{CLOAD}$
7	H	15	A
8	GND	16	V_{CC}

FH, FN PACKAGES			
1	nc	11	nc
2	B	12	$\overline{RCO}$
3	C	13	$\overline{CCLR}$
4	D	14	CCK
5	E	15	$\overline{CCKEN}$
6	nc	16	nc
7	F	17	RCK
8	G	18	$\overline{CLOAD}$
9	H	19	A
10	GND	20	V_{CC}

593

8-BIT BINARY COUNTERS WITH INPUT REGISTERS

- Has parallel three-state I/O: register inputs/counter outputs
- Counter has direct overriding load and clear
- Guaranteed counter frequency . . . dc to 20 MHz

typical performance

MAX COUNT FREQ	PARALLEL LOAD	CLEAR	TOTAL POWER
20 MHz	SYNC	SYNC-L	177 mW

SN54LS593 (J,FH)
SN74LS593 (J,N,FN)

logic symbol†

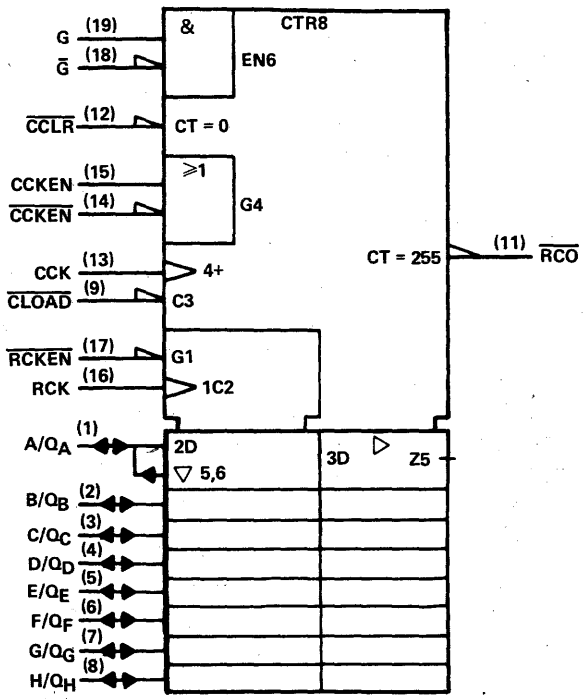

pin assignments

J, N PACKAGES			
1	A/Q_A	11	$\overline{RCO}$
2	B/Q_B	12	$\overline{CCLR}$
3	C/Q_C	13	CCK
4	D/Q_D	14	$\overline{CCKEN}$
5	E/Q_E	15	CCKEN
6	F/Q_F	16	RCK
7	G/Q_G	17	$\overline{RCKEN}$
8	H/Q_H	18	$\overline{G}$
9	$\overline{CLOAD}$	19	G
10	GND	20	V_{CC}

FH, FN PACKAGES			
1	A/Q_A	11	$\overline{RCO}$
2	B/Q_B	12	$\overline{CCLR}$
3	C/Q_C	13	CCK
4	D/Q_D	14	$\overline{CCKEN}$
5	E/Q_E	15	CCKEN
6	F/Q_F	16	RCK
7	G/Q_G	17	$\overline{RCKEN}$
8	H/Q_H	18	$\overline{G}$
9	$\overline{CLOAD}$	19	G
10	GND	20	V_{CC}

† Pin numbers shown on logic symbols are for J and N packages only.
nc — no internal connection.

Copyright © 1983 by Texas Instruments Incorporated.

TEXAS INSTRUMENTS
POST OFFICE BOX 225012 • DALLAS, TEXAS 75265

594

8-BIT SHIFT REGISTERS WITH OUTPUT LATCHES

- Serial-in, parallel-out shift registers with storage
- Buffered outputs
- Guaranteed shift frequency . . . dc to 20 MHz

typical performance

TYPE	SERIAL DATA INPUT	ASYNC CLEAR	TOTAL POWER
'LS594	D	Low	180 mW

SN54LS594 (J,FH) SN74LS594 (J,N,FN)

logic symbol†

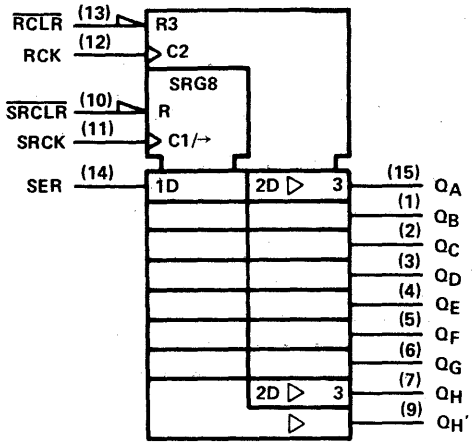

pin assignments

J, N PACKAGES			
1	Q_B	9	$Q_{H'}$
2	Q_C	10	$\overline{SRCLR}$
3	Q_D	11	$\overline{SRCK}$
4	Q_E	12	RCK
5	Q_F	13	$\overline{RCLR}$
6	Q_G	14	SER
7	Q_H	15	Q_A
8	GND	16	V_{CC}

FH, FN PACKAGES			
1	nc	11	nc
2	Q_B	12	$Q_{H'}$
3	Q_C	13	$\overline{SRCLR}$
4	Q_D	14	$\overline{SRCK}$
5	Q_E	15	RCK
6	nc	16	nc
7	Q_F	17	$\overline{RCLR}$
8	Q_G	18	SER
9	Q_H	19	Q_A
10	GND	20	V_{CC}

595, 596

8-BIT SHIFT REGISTERS WITH OUTPUT LATCHES

- Serial-in, parallel-out shift registers with storage
- 'LS595 has three-state parallel outputs
- 'LS596 has open-collector parallel outputs
- Guaranteed shift frequency . . . dc to 20 MHz

typical performance

TYPE	SERIAL DATA INPUT	ASYNC CLEAR	TOTAL POWER
'LS595	D	LOW	167 mW
'LS596	D	LOW	160 mW

SN54LS595 (J,FH) SN74LS595 (J,N,FN)
SN54LS596 (J,FH) SN74LS596 (J,N,FN)

logic symbol, 'LS595†

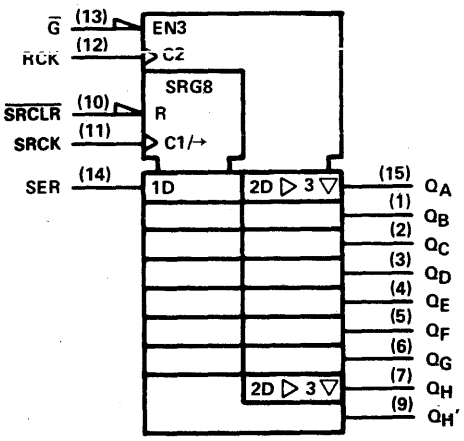

logic symbol, 'LS596†

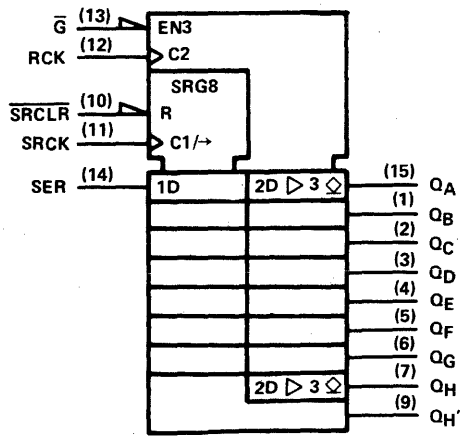

pin assignments

J, N PACKAGES			
1	Q_B	9	$Q_{H'}$
2	Q_C	10	$\overline{SRCLR}$
3	Q_D	11	$\overline{SRCK}$
4	Q_E	12	RCK
5	Q_F	13	$\overline{G}$
6	Q_G	14	SER
7	Q_H	15	Q_A
8	GND	16	V_{CC}

FH, FN PACKAGES			
1	nc	11	nc
2	Q_B	12	$Q_{H'}$
3	Q_C	13	$\overline{SCLR}$
4	Q_D	14	SCK
5	Q_E	15	RCK
6	nc	16	nc
7	Q_F	17	$\overline{G}$
8	Q_G	18	SER
9	Q_H	19	Q_A
10	GND	20	V_{CC}

† Pin numbers shown on logic symbols are for J and N packages only.
nc — no internal connection.

Copyright © 1983 by Texas Instruments Incorporated.

TEXAS INSTRUMENTS
POST OFFICE BOX 225012 • DALLAS, TEXAS 75265

© IC MASTER 1984

597

8-BIT SHIFT REGISTERS WITH INPUT LATCHES

- Has parallel storage register inputs
- Shift register has direct over-riding load and clear
- Guaranteed shift frequency . . . dc to 20 MHz

typical performance

TYPE	SERIAL DATA INPUT	ASYNC CLEAR	TOTAL POWER
'LS597	D	LOW	130 mW

SN54LS597 (J,FH) SN74LS597 (J,N,FN)

logic symbol†

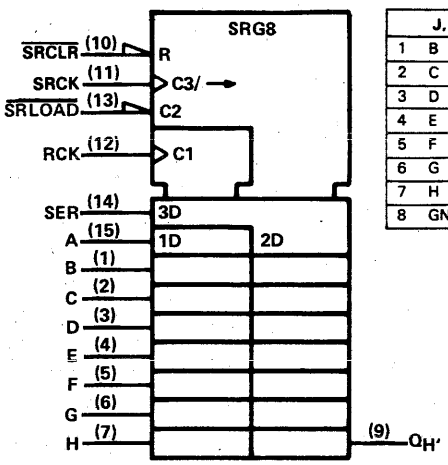

pin assignments

J, N PACKAGES				FH, FN PACKAGES			
1	B	9	$Q_{H'}$	1	nc	11	nc
2	C	10	$\overline{SRCLR}$	2	B	12	$Q_{H'}$
3	D	11	SRCK	3	C	13	$\overline{SRCLR}$
4	E	12	RCK	4	D	14	SRCK
5	F	13	$\overline{SRLOAD}$	5	E	15	RCK
6	G	14	SER	6	nc	16	nc
7	H	15	A	7	F	17	$\overline{SRLOAD}$
8	GND	16	V_{CC}	8	G	18	SER
				9	H	19	A
				10	GND	20	V_{CC}

598

8-BIT SHIFT REGISTERS WITH INPUT LATCHES

- Has parallel three-state I/O storage register inputs, shift register outputs
- Shift register has direct over-riding load and clear
- Guaranteed shift frequency . . . dc to 20 MHz

typical performance

TYPE	SERIAL DATA INPUT	ASYNC CLEAR	TOTAL POWER
'LS598	D	LOW	177 mW

SN54LS598 (J,FH) SN74LS598 (J,N,FN)

logic symbol†

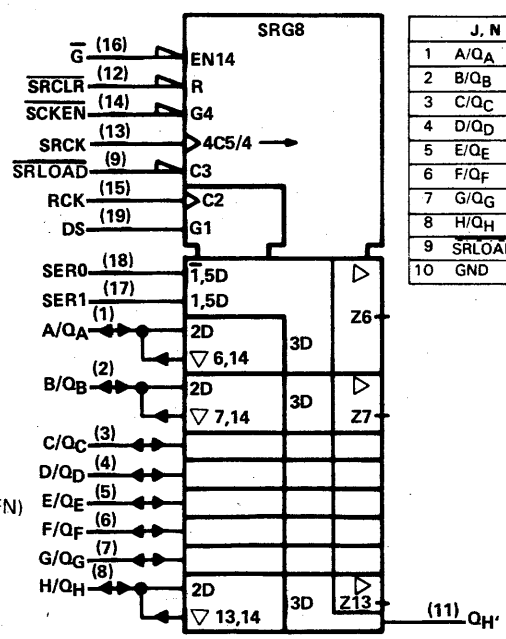

pin assignments

J, N PACKAGES				FH, FN PACKAGES			
1	A/Q_A	11	$Q_{H'}$	1	A/Q_A	11	$Q_{H'}$
2	B/Q_B	12	$\overline{SRCLR}$	2	B/Q_B	12	$\overline{SRCLR}$
3	C/Q_C	13	SRCK	3	C/Q_C	13	SRCK
4	D/Q_D	14	$\overline{SRCKEN}$	4	D/Q_D	14	$\overline{SCKEN}$
5	E/Q_E	15	RCK	5	E/Q_E	15	RCK
6	F/Q_F	16	$\overline{G}$	6	F/Q_F	16	$\overline{G}$
7	G/Q_G	17	SER1	7	G/Q_G	17	SER1
8	H/Q_H	18	SER0	8	H/Q_H	18	SER0
9	$\overline{SRLOAD}$	19	DS	9	$\overline{SRLOAD}$	19	DS
10	GND	20	V_{CC}	10	GND	20	V_{CC}

† Pin numbers shown on logic symbols are for J and N packages only.
nc — no internal connection.

Copyright © 1983 by Texas Instruments Incorporated.

TEXAS INSTRUMENTS
POST OFFICE BOX 225012 • DALLAS, TEXAS 75265

599

8-BIT SHIFT REGISTERS WITH OUTPUT LATCHES

- Serial-in, parallel-out shift registers
- Open-collector outputs
- Guaranteed shift frequency
  . . . dc to 20 MHz

typical performance

TYPE	SERIAL DATA INPUT	ASYNC CLEAR	TOTAL POWER
'LS599	D	Low	170 mW

SN54LS599 (J,FH) SN74LS599 (J,N,FN)

logic symbol†

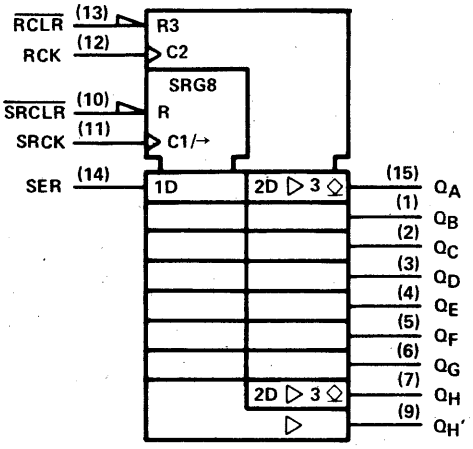

pin assignments

J, N PACKAGES			
1	Q_B	9	$Q_{H'}$
2	Q_C	10	$\overline{SRCLR}$
3	Q_D	11	SRCK
4	Q_E	12	RCK
5	Q_F	13	$\overline{RCLR}$
6	Q_G	14	SER
7	Q_H	15	Q_A
8	GND	16	V_{CC}

FH, FN PACKAGES			
1	nc	11	nc
2	Q_B	12	$Q_{H'}$
3	Q_C	13	$\overline{SRCLR}$
4	Q_D	14	SRCK
5	Q_E	15	RCK
6	nc	16	nc
7	Q_F	17	$\overline{RCLR}$
8	Q_G	18	SER
9	Q_H	19	Q_A
10	GND	20	V_{CC}

† Pin numbers shown on logic symbols are for J and N packages only.
nc — no internal connection.

Copyright © 1983 by Texas Instruments Incorporated.

600

MEMORY REFRESH CONTROLLERS

- Controls refresh cycle of 4K or 16K dynamic RAM's
- Three-state outputs drive bus lines directly
- Time to initiate refresh request is typically 30 ns
- Refresh modes: transparent, burst

SN74LS600A (J,N)

pin assignments

J,N PACKAGES			
1	$\overline{BUSY}$	11	RC $\overline{RAS}$ HI
2	A0	12	RC $\overline{RAS}$ LO
3	A1	13	REF REQ1
4	A2	14	REF REQ2
5	A3	15	$\overline{RAS}$
6	A4	16	$\overline{HOLD}$
7	A5	17	LATCHED RCO
8	A6	18	RESET LATCHED RCO
9	4K/$\overline{16K}$	19	RC BURST
10	GND	20	V_{CC}

logic diagram†

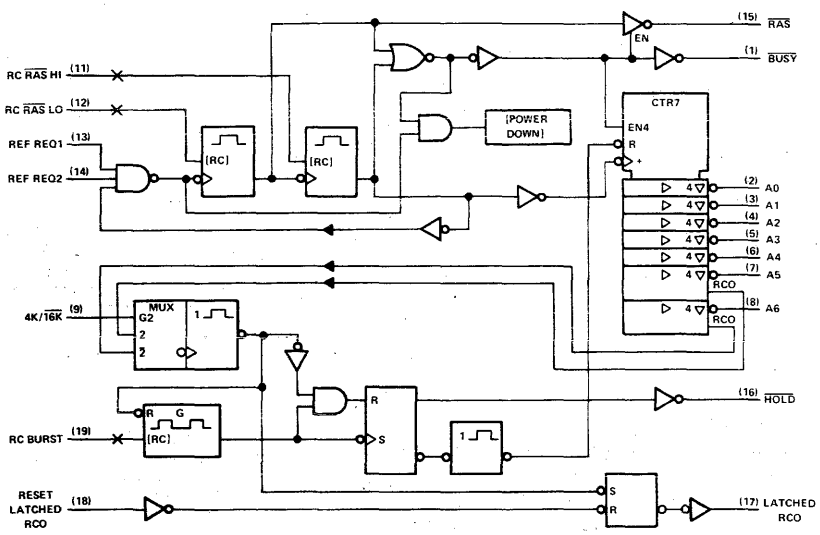

For chip carrier information, contact the factory.

601

MEMORY REFRESH CONTROLLERS

- Controls refresh cycle of 64K dynamic RAM's
- Three-state outputs drive bus lines directly
- Time to initiate refresh request is typically 30 ns
- Refresh modes: transparent, burst

SN74LS601A (J,N)

pin assignments

J,N PACKAGES			
1	$\overline{BUSY}$	11	RC $\overline{RAS}$ HI
2	A0	12	RC $\overline{RAS}$ LO
3	A1	13	REF REQ1
4	A2	14	REF REQ2
5	A3	15	$\overline{RAS}$
6	A4	16	$\overline{HOLD}$
7	A5	17	LATCHED RCO
8	A6	18	RESET LATCHED RCO
9	A7	19	RC BURST
10	GND	20	V_{CC}

logic diagram†

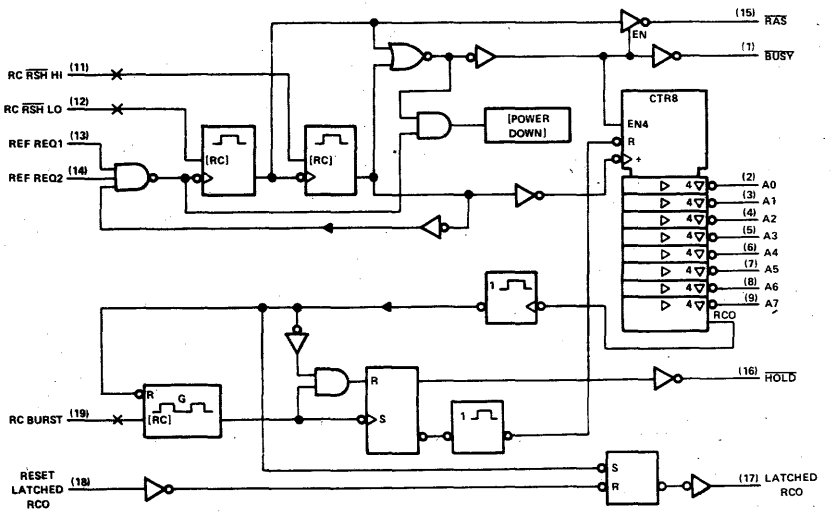

For chip carrier information, contact the factory.

†Pin numbers shown on logic symbols are for J and N packages only.
nc — no internal connection.

Copyright © 1983 by Texas Instruments Incorporated.

602

MEMORY REFRESH CONTROLLERS

- Controls refresh cycle of 4K or 16K dynamic RAM's
- Three-state outputs drive bus lines directly
- Time to initiate refresh request is typically 30 ns
- Refresh modes: cycle steal, burst

SN74LS602A (J,N)

pin assignments

J, N PACKAGES			
1	$\overline{BUSY}$	11	RC $\overline{RAS}$ HI
2	A0	12	RC $\overline{RAS}$ LO
3	A1	13	REF REQ1
4	A2	14	REF REQ2
5	A3	15	$\overline{RAS}$
6	A4	16	$\overline{HOLD}$
7	A5	17	READY
8	A6	18	RC CYCLE STEAL
9	4K/16K	19	RC BURST
10	GND	20	V_{CC}

logic diagram†

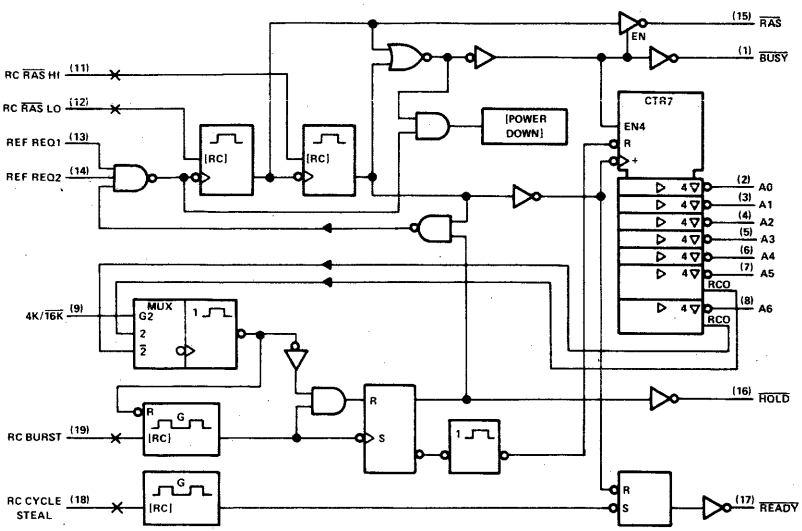

For chip carrier information, contact the factory.

603

MEMORY REFRESH CONTROLLERS

- Controls refresh cycle of 64K dynamic RAM's
- Three-state outputs drive bus lines directly
- Time to initiate refresh request is typically 30 ns
- Refresh modes: cycle steal, burst

SN74LS603A (J,N)

pin assignments

J, N PACKAGES			
1	$\overline{BUSY}$	11	RC $\overline{RAS}$ HI
2	A0	12	RC $\overline{RAS}$ LO
3	A1	13	REF REQ1
4	A2	14	REF REQ2
5	A3	15	$\overline{RAS}$
6	A4	16	$\overline{HOLD}$
7	A5	17	$\overline{READY}$
8	A6	18	RC CYCLE STEAL
9	A7	19	RC BURST
10	GND	20	V_{CC}

logic diagram†

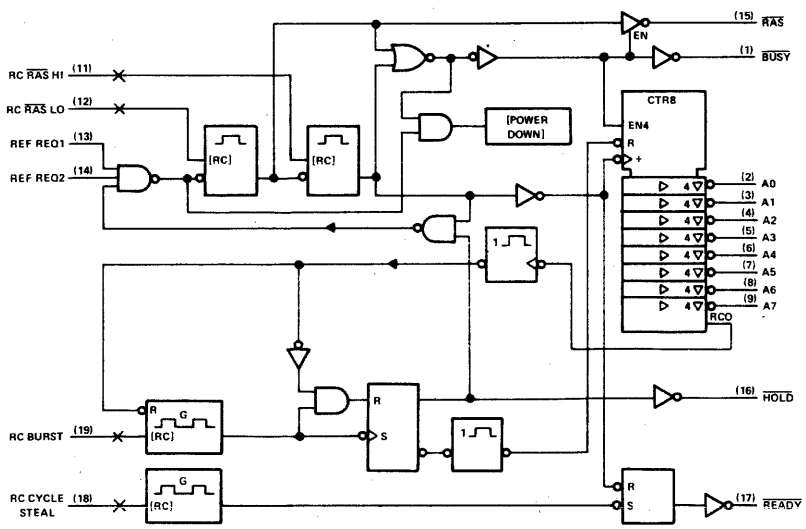

For chip carrier information, contact the factory.

†Pin numbers shown on logic symbols are for J and N packages only.

nc — no internal connection.

Copyright © 1983 by Texas Instruments Incorporated.

604, 605
606, 607

OCTAL 2-INPUT MULTIPLEXED REGISTERS

- 16 D-type registers – one for each data input
- 'LS604 and 'LS606 feature three-state outputs
- Multiplexers select stored data from either A or B bus
- Application-oriented:
  - max speed - ('LS604, 'LS605)
  - glitch-free operation - ('LS606, 'LS607)

typical performance

TYPE	DELAY	POWER
'LS604	23.5 ns	275 mW
'LS605	26 ns	200 mW
'LS606	31 ns	275 mW
'LS607	31 ns	200 mW

SN54LS604 (JD,FH)
SN54LS605 (JD,FH)
SN54LS606 (JD,FH)
SN54LS607 (JD,FH)

SN74LS604 (JD,N,FN)
SN74LS605 (JD,N,FN)
SN74LS606 (JD,N,FN)
SN74LS607 (JD,N,FN)

logic symbol, 'LS604, 'LS606†

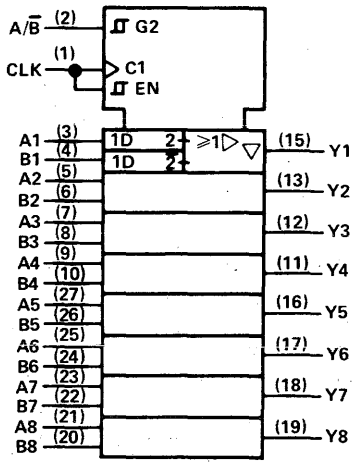

logic symbol, 'LS605, 'LS607†

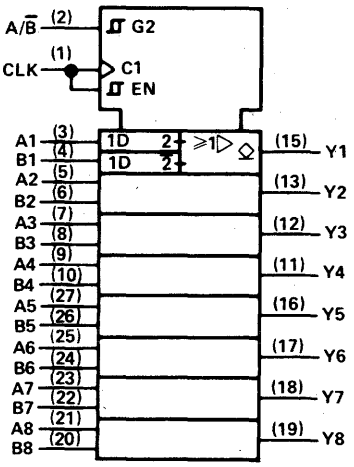

pin assignments

JD, N PACKAGES				FH, FN PACKAGES			
1	CLK	15	Y1	1	CLK	15	Y1
2	A/B̄	16	Y5	2	A/B̄	16	Y5
3	A1	17	Y6	3	A1	17	Y6
4	B1	18	Y7	4	B1	18	Y7
5	A2	19	Y8	5	A2	19	Y8
6	B2	20	B8	6	B2	20	B8
7	A3	21	A8	7	A3	21	A8
8	B3	22	B7	8	B3	22	B7
9	A4	23	A7	9	A4	23	A7
10	B4	24	B6	10	B4	24	B6
11	Y4	25	A6	11	Y4	25	A6
12	Y3	26	B5	12	Y3	26	B5
13	Y2	27	A5	13	Y2	27	A5
14	GND	28	V_{CC}	14	GND	28	V_{CC}

†Pin numbers shown on logic symbols are for JD and N packages only.

Copyright © 1983 by Texas Instruments Incorporated.

608

MEMORY CYCLE CONTROLLERS

- Read cycle
- Write cycle
- Read, modify, write cycle
- RAS-only refresh cycle
- Page or normal modes
- Stand-alone controller for CPU-to-memory interface

SN54LS608 (J,FH) SN74LS608 (J,N,FN)

logic symbol†

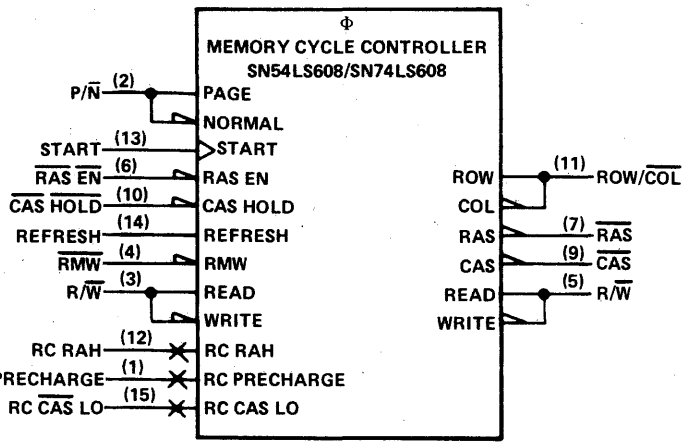

pin assignments

J, N PACKAGES			
1	PRECHARGE	9	$\overline{CAS}$
2	P/$\overline{N}$	10	$\overline{CAS}$ $\overline{HOLD}$
3	R/$\overline{W}$ in	11	ROW/$\overline{COL}$
4	$\overline{RMW}$	12	RC RAH
5	R/$\overline{W}$ out	13	START
6	$\overline{RAS}$ $\overline{EN}$	14	REFRESH
7	$\overline{RAS}$	15	RC $\overline{CAS}$ LO
8	GND	16	V_{CC}

FH, FN PACKAGES			
1	nc	11	nc
2	PRECHARGE	12	$\overline{CAS}$
3	P/$\overline{N}$	13	$\overline{CAS}$ $\overline{HOLD}$
4	R/$\overline{W}$ in	14	ROW/$\overline{COL}$
5	$\overline{RMW}$	15	RC RAH
6	nc	16	nc
7	R/$\overline{W}$ out	17	START
8	$\overline{RAS}$ $\overline{EN}$	18	REFRESH
9	$\overline{RAS}$	19	RC $\overline{CAS}$ LO
10	GND	20	V_{CC}

†Pin numbers shown on logic symbols are for J and N packages only.

Copyright © 1983 by Texas Instruments Incorporated.

610, 611 612, 613

MEMORY MAPPERS

typical performance

TYPE	MAP OUTPUTS LATCHED	MAP OUTPUT TYPE
'LS610	Yes	3-State
'LS611	Yes	O-C
'LS612	No	3-State
'LS613	No	O-C

- Designed for paged memory mapping
- Expands four address lines to 12 address lines

SN54LS610 (JD,FC) SN74LS610 (JD,N)
SN54LS611 (JD,FC) SN74LS611 (JD,N)
SN54LS612 (JD,FC) SN74LS612 (JD,N)
SN54LS613 (JD,FC) SN74LS613 (JD,N)

pin assignments

JD, N PACKAGES		FC PACKAGE	
1 RS2	21 $\overline{ME}$	1 RS2	23 $\overline{ME}$
2 MA3	22 MO6	2 MA3	24 MO6
3 RS3	23 MO7	3 RS3	25 MO7
4 $\overline{CS}$	24 MO8	4 $\overline{CS}$	26 MO8
5 $\overline{STROBE}$	25 MO9	5 $\overline{STROBE}$	27 MO9
6 R/$\overline{W}$	26 MO10	6 nc	28 nc
7 D0	27 MO11	7 R/$\overline{W}$	29 MO10
8 D1	28 ★	8 D0	30 MO11
9 D2	29 D6	9 D1	31 ★
10 D3	30 D7	10 D2	32 D6
11 D4	31 D8	11 D3	33 D7
12 D5	32 D9	12 D4	34 D8
13 $\overline{MM}$	33 D10	13 D5	35 D9
14 MO0	34 D11	14 $\overline{MM}$	36 D10
15 MO1	35 MA0	15 MO0	37 D11
16 MO2	36 RS0	16 MO1	38 MA0
17 MO3	37 MA1	17 nc	39 nc
18 MO4	38 RS1	18 MO2	40 RS0
19 MO5	39 MA2	19 MO3	41 MA1
20 GND	40 V_{CC}	20 MO4	42 RS1
		21 MO5	43 MA2
		22 GND	44 V_{CC}

★ C on 'LS610 and 'LS611
nc on 'LS612 and 'LS613

functional block diagram (positive logic)

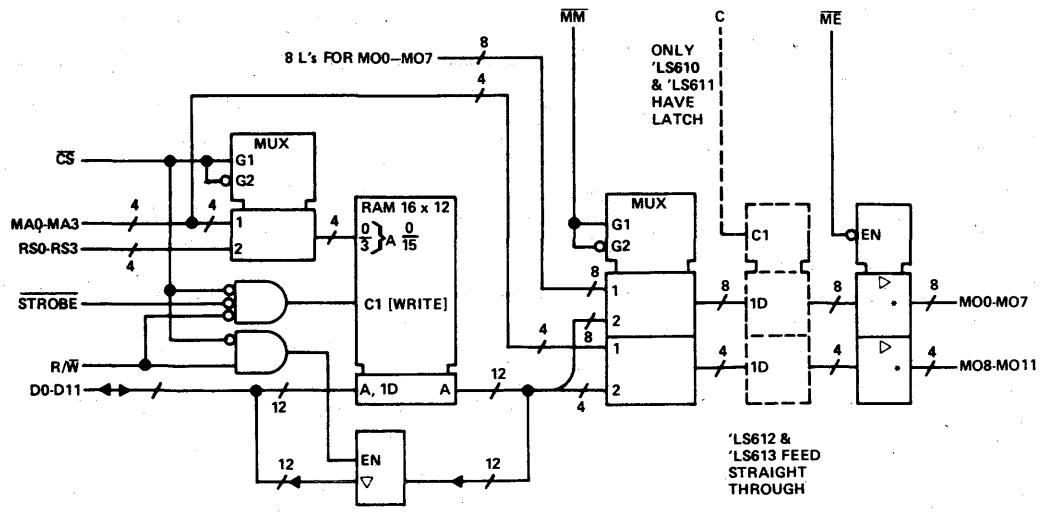

*'LS610 and 'LS612 have 3-state (▽) map outputs.
'LS611 and 'LS613 have open-collector (◇) map outputs.

nc — no internal connection.

Copyright © 1983 by Texas Instruments Incorporated.

620, 621
622, 623

OCTAL BUS TRANSCEIVERS

- Bidirectional bus transceivers
- Local bus latch capability

typical performance

TYPE	OUTPUT	MAX SOURCE CURRENT	MAX SINK CURRENT
SN54ALS620	3-State	– 12 mA	12 mA
SN74ALS620	3-State	– 15 mA	24 mA
SN74ALS620-1	3-State	– 15 mA	48 mA
SN54ALS621	O-C	–	12 mA
SN74ALS621	O-C	–	24 mA
SN74ALS621-1	O-C	–	48 mA
SN54ALS622	O-C	–	12 mA
SN74ALS622	O-C	–	24 mA
SN74ALS622-1	O-C	–	48 mA
SN54ALS623	3-State	– 12 mA	12 mA
SN74ALS623	3-State	– 15 mA	24 mA
SN74ALS623-1	3-State	– 15 mA	48 mA
SN54AS620	3-State	– 12 mA	48 mA
SN74AS620	3-State	– 15 mA	64 mA
SN54AS621	O-C	–	48 mA
SN74AS621	O-C	–	64 mA
SN54AS622	O-C	–	48 mA
SN74AS622	O-C	–	64 mA
SN54AS623	3-State	– 12 mA	48 mA
SN74AS623	3-State	– 15 mA	64 mA
SN54LS620	3-State	– 12 mA	12 mA
SN74LS620	3-State	– 15 mA	24 mA
SN54LS621	O-C	–	12 mA
SN74LS621	O-C	–	24 mA
SN54LS622	O-C	–	12 mA
SN74LS622	O-C	–	24 mA
SN54LS623	3-State	– 12 mA	12 mA
SN74LS623	3-State	– 15 mA	24 mA

SN54ALS620 (J,FH)	SN74ALS620 (N,FN)
	SN74ALS620-1 (N,FN)
SN54ALS621 (J,FH)	SN74ALS621 (N,FN)
	SN74ALS621-1 (N,FN)
SN54ALS622 (J,FH)	SN74ALS622 (N,FN)
	SN74ALS622-1 (N,FN)
SN54ALS623 (J,FH)	SN74ALS623 (N,FN)
	SN74ALS623-1 (N,FN)
SN54AS620 (J,FH)	SN74AS620 (N,FN)
SN54AS621 (J,FH)	SN74AS621 (N,FN)
SN54AS622 (J,FH)	SN74AS622 (N,FN)
SN54AS623 (J,FH)	SN74AS623 (N,FN)
SN54ALS620 (J,FH)	SN74ALS620 (J,N,FN)
SN54LS621 (J,FH)	SN74LS621 (J,N,FN)
SN54LS622 (j,FH)	SN74LS622 (J,N,FN)
SN54LS623 (J,FH)	SN74LS623 (J,N,FN)

logic symbol, 'ALS620, 'AS620, 'LS620†

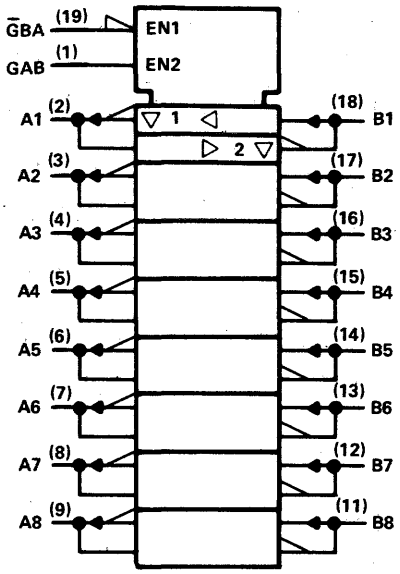

logic symbol, 'ALS621, 'AS621, 'LS621†

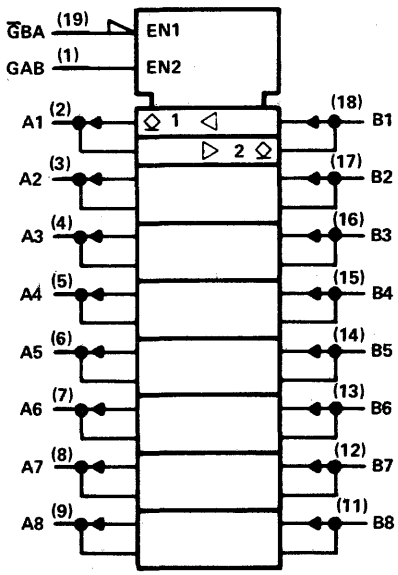

pin assignments

J, N PACKAGES				FH, FN PACKAGES			
1	GAB	11	B8	1	GAB	11	B8
2	A1	12	B7	2	A1	12	B7
3	A2	13	B6	3	A2	13	B6
4	A3	14	B5	4	A3	14	B5
5	A4	15	B4	5	A4	15	B4
6	A5	16	B3	6	A5	16	B3
7	A6	17	B2	7	A6	17	B2
8	A7	18	B1	8	A7	18	B1
9	A8	19	$\overline{G}$BA	9	A8	19	$\overline{G}$BA
10	GND	20	V_{CC}	10	GND	20	V_{CC}

logic symbol, 'ALS622, 'AS622, 'LS622†

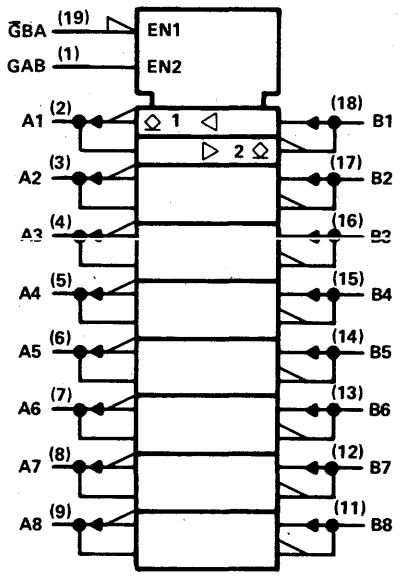

logic symbol, 'ALS623, 'AS623, 'LS623†

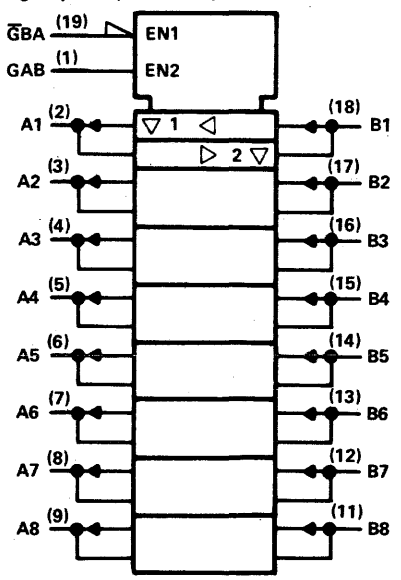

† Pin numbers shown on logic symbols are for J and N packages only.
nc – no internal connection.

Copyright © 1983 by Texas Instruments Incorporated.

624

VOLTAGE-CONTROLLED OSCILLATORS

typical performance

TYPE	REPLACES
'LS624	'LS324

- Separate supply voltage pins for isolation of input/output signals
- Maximum output frequency = 20 MHz
- Improved version of original VCO family

SN54LS624 (J,FH) SN74LS624 (J,N,FN)

logic symbol†

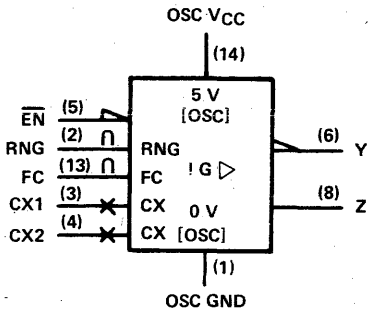

pin assignments

J, N PACKAGES			
1	OSC GND	8	Z
2	RNG	9	V_{CC}
3	CX1	10	nc
4	CX2	11	nc
5	$\overline{EN}$	12	nc
6	Y	13	FREQ CONT
7	GND	14	OSC V_{CC}

FH, FN PACKAGES			
1	nc	11	nc
2	OSC GND	12	Z
3	RNG	13	V_{CC}
4	CX1	14	nc
5	nc	15	nc
6	CX2	16	nc
7	nc	17	nc
8	$\overline{EN}$	18	nc
9	Y	19	FREQ CONT
10	GND	20	OSC V_{CC}

625

VOLTAGE-CONTROLLED OSCILLATORS

typical performance

TYPE	REPLACES
'LS625	'LS325

- Separate supply voltage pins for input/output isolation
- Maximum output frequency = 20 MHz
- Improved version of original family

SN54LS625 (J,FH) SN74LS625 (J,N,FN)

logic symbol†

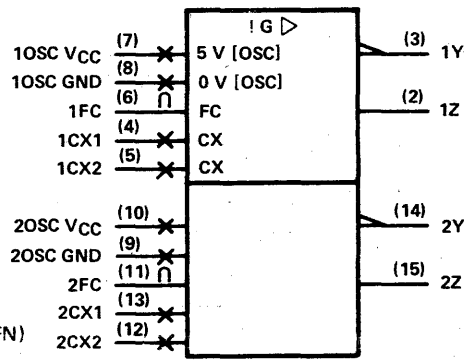

pin assignments

J, N PACKAGES			
1	GND	9	2OSC GND
2	1Z	10	2OSC V_{CC}
3	1Y	11	2FC
4	1CX1	12	2CX2
5	1CX2	13	2CX1
6	1FC	14	2Y
7	1OSC V_{CC}	15	2Z
8	1OSC GND	16	V_{CC}

FH, FN PACKAGES			
1	nc	11	nc
2	GND	12	2OSC GND
3	1Z	13	2OSC V_{CC}
4	1Y	14	2FC
5	1CX1	15	2CX2
6	nc	16	nc
7	1CX2	17	2CX1
8	1FC	18	2Y
9	1OSC V_{CC}	19	2Z
10	1OSC GND	20	V_{CC}

626

VOLTAGE-CONTROLLED OSCILLATORS

typical performance

TYPE	REPLACES
'LS626	'LS326

- Separate supply voltage pins for input/output isolation
- Maximum output frequency = 20 MHz
- Improved version of original family

SN54LS626 (J,FH) SN74LS626 (J,N,FN)

logic symbol†

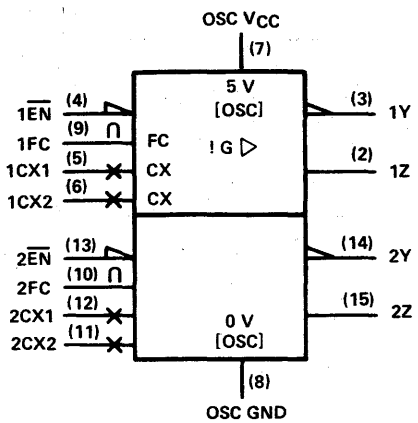

pin assignments

J, N PACKAGES			
1	GND	9	1FC
2	1Z	10	2FC
3	1Y	11	2CX2
4	$1\overline{EN}$	12	2CX1
5	1CX1	13	$2\overline{EN}$
6	1CX2	14	2Y
7	OSC V_{CC}	15	2Z
8	OSC GND	16	V_{CC}

FH, FN PACKAGES			
1	nc	11	nc
2	GND	12	1FC
3	1Z	13	2FC
4	1Y	14	2CX2
5	$1\overline{EN}$	15	2CX1
6	nc	16	nc
7	1CX1	17	$2\overline{EN}$
8	1CX2	18	2Y
9	OSC V_{CC}	19	2Z
10	OSC GND	20	V_{CC}

† Pin numbers shown on logic symbols are for J and N packages only.
nc — no internal connection.

Copyright © 1983 by Texas Instruments Incorporated.

627

VOLTAGE-CONTROLLED OSCILLATORS

typical performance

TYPE	REPLACES
'LS627	'LS327

- Separate supply voltage pins for input/output isolation
- Maximum output frequency = 20 MHz
- Improved version of original family

SN54LS627 (J,FH)
SN74LS627 (J,N,FN)

logic symbol†

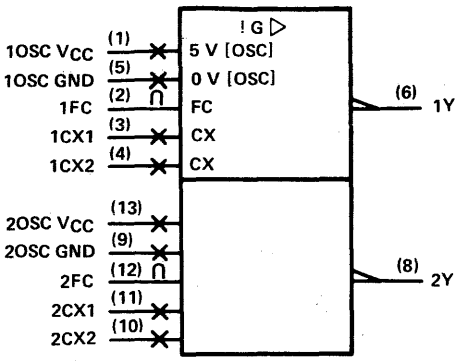

pin assignments

J, N PACKAGES				FH, FN PACKAGES			
1	1OSC VCC	8	2Y	1	nc	11	nc
2	1FC	9	2OSC GND	2	1OSC VCC	12	2Y
3	1CX1	10	2CX2	3	1FC	13	2OSC GND
4	1CX2	11	2CX1	4	1CX1	14	2CX2
5	1OSC GND	12	2FC	5	nc	15	nc
6	1Y	13	2OSC VCC	6	1CX2	16	2CX1
7	GND	14	VCC	7	nc	17	nc
				8	1OSC GND	18	2FC
				9	1Y	19	2OSC VCC
				10	GND	20	VCC

628

VOLTAGE-CONTROLLED OSCILLATORS

typical performance

TYPE	REPLACES
'LS628	'LS324

- Separate supply voltage pins for input/output oscillators
- Maximum output frequency = 20 MHz
- Improved version of original family

SN54LS628 (J,FH)
SN74LS628 (J,N,FN)

logic symbol†

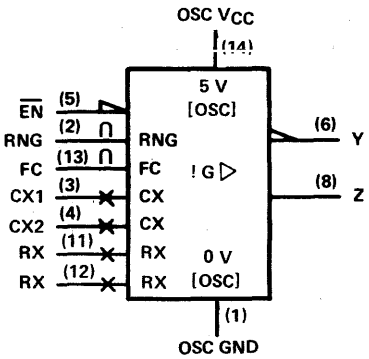

pin assignments

J, N PACKAGES				FH, FN PACKAGES			
1	OSC GND	8	Z	1	nc	11	nc
2	RNG	9	VCC	2	OSC GND	12	Z
3	CX1	10	nc	3	RNG	13	VCC
4	CX2	11	RX	4	CX1	14	nc
5	$\overline{EN}$	12	RX	5	nc	15	nc
6	Y	13	FC	6	CX2	16	RX
7	GND	14	OSC VCC	7	nc	17	nc
				8	$\overline{EN}$	18	RX
				9	Y	19	FC
				10	GND	20	OSC VCC

629

VOLTAGE-CONTROLLED OSCILLATORS

typical performance

TYPE	REPLACES
'LS629	'LS124

- Separate power supply pins for input/output isolation
- Maximum output frequency = 20 MHz
- Improved version of original family

SN54LS629 (J,FH)
SN74LS629 (J,N,FN)

logic symbol†

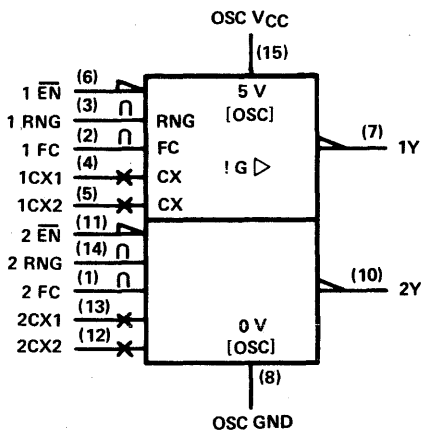

pin assignments

J, N PACKAGES				FH, FN PACKAGES			
1	2FC	9	GND	1	nc	11	nc
2	1FC	10	2Y	2	2FC	12	GND
3	1RNG	11	$2\overline{EN}$	3	1FC	13	2Y
4	1CX1	12	2CX1	4	1RNG	14	$2\overline{EN}$
5	1CX2	13	2CX2	5	1CX1	15	2CX1
6	$1\overline{EN}$	14	2RNG	6	nc	16	nc
7	1Y	15	OSC VCC	7	1CX2	17	2CX2
8	OSC GND	16	VCC	8	$1\overline{EN}$	18	2RNG
				9	1Y	19	OSC VCC
				10	OSC GND	20	VCC

† Pin numbers shown on logic symbols are for J and N packages only.
nc — no internal connection.

Copyright © 1983 by Texas Instruments Incorporated.

630, 631

16-BIT PARALLEL ERROR DETECTION AND CORRECTION CIRCUITS

- Fast processing times:
  - Write cycle: generates check word in 45 ns typical
  - Read cycle: flags errors in 27 ns typical
- Detects and corrects single bit error
- Detects and flags dual-bit errors

typical performance

TYPE	OUTPUT	DELAY	POWER
'LS630	3-State	27 ns	715 mW
'LS631	O-C	28 ns	565 mW

SN54LS630 (JD,FH) SN74LS630 (JD,N,FN)
SN54LS631 (JD,FH) SN74LS631 (JD,N,FN)

pin assignments

JD, N PACKAGES				FH, FN PACKAGES			
1	DEF	15	DB12	1	DEF	15	DB12
2	DB0	16	DB13	2	DB0	16	DB13
3	DB1	17	DB14	3	DB1	17	DB14
4	DB2	18	DB15	4	DB2	18	DB15
5	DB3	19	CB5	5	DB3	19	CB5
6	DB4	20	CB4	6	DB4	20	CB4
7	DB5	21	CB3	7	DB5	21	CB3
8	DB6	22	CB2	8	DB6	22	CB2
9	DB7	23	CB1	9	DB7	23	CB1
10	DB8	24	CB0	10	DB8	24	CB0
11	DB9	25	S0	11	DB9	25	S0
12	DB10	26	S1	12	DB10	26	S1
13	DB11	27	SEF	13	DB11	27	SEF
14	GND	28	V_{CC}	14	GND	28	V_{CC}

functional block diagram

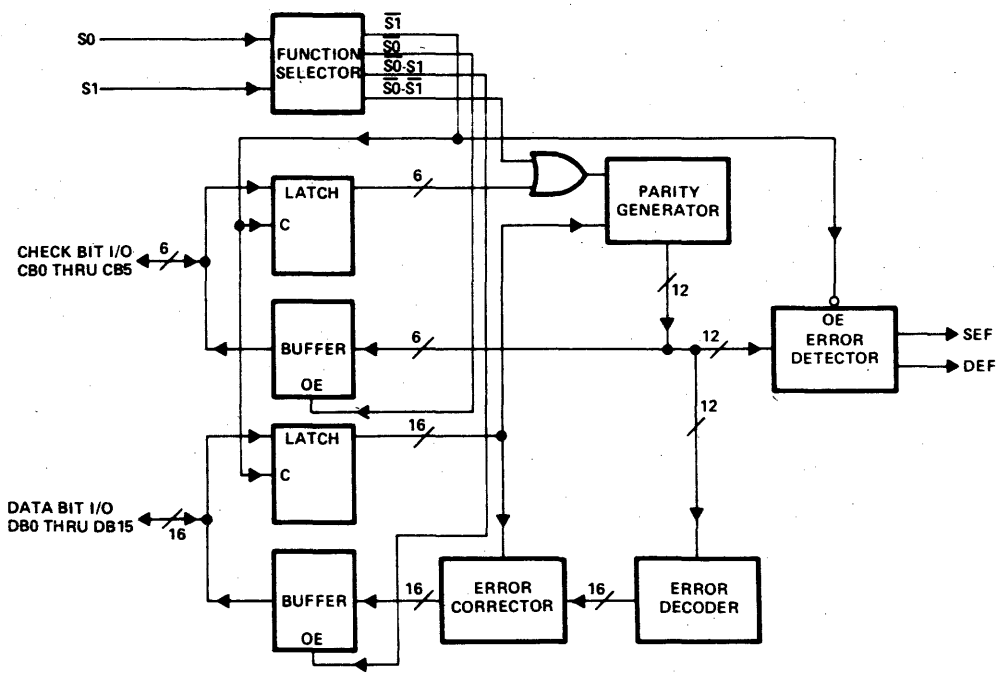

nc — no internal connection.

See Application Note section for additional information on Texas Instruments Bipolar EDAC products

Copyright © 1983 by Texas Instruments Incorporated.

TEXAS INSTRUMENTS
POST OFFICE BOX 225012 • DALLAS, TEXAS 75265

632, 633

32-BIT PARALLEL ERROR DETECTION AND CORRECTION CIRCUITS

- Detects and Corrects Single-bit errors
- Detects and Flags dual-bit errors
- Fast processing times
- Byte-Write capability

typical performance

TYPE	OUTPUT	DELAY	POWER
'ALS632	3-State		
'ALS633	O-C		

SN54ALS632 (JD) SN74ALS632 (JD)
SN54ALS633 (JD) SN74ALS633 (JD)

pin assignments

JD PACKAGE			
1	$\overline{LEDBO}$	27	CB3
2	$\overline{MERR}$	28	CB2
3	$\overline{ERR}$	29	CB1
4	DB0	30	CB0
5	DB1	31	DB16
6	DB2	32	DB17
7	DB3	33	DB18
8	DB4	34	DB19
9	DB5	35	DB20
10	$\overline{OEB0}$	36	DB21
11	DB6	37	$\overline{OEB2}$
12	DB7	38	DB22
13	GND	39	DB23
14	DB8	40	GND
15	DB9	41	DB24
16	$\overline{OEB1}$	42	DB25
17	DB10	43	$\overline{OEB3}$
18	DB11	44	DB26
19	DB12	45	DB27
20	DB13	46	DB28
21	DB14	47	DB29
22	DB15	48	DB30
23	CB6	49	DB31
24	CB5	50	S0
25	CB4	51	S1
26	$\overline{OECB}$	52	V_{CC}

For chip carrier information, contact the factory.

logic diagram (positive logic)

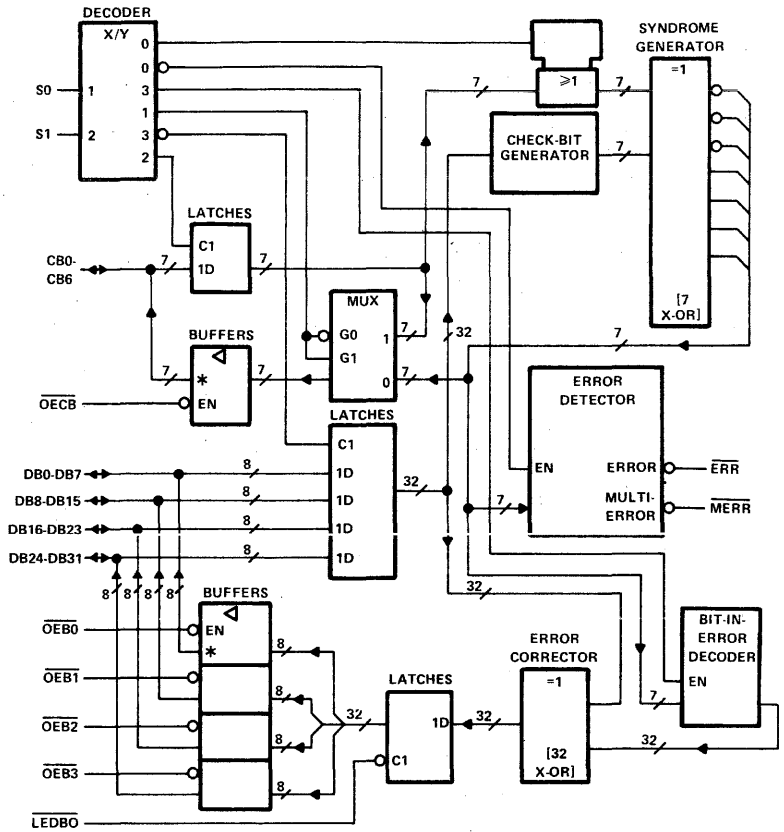

See Application Note section for additional information

Copyright © 1983 by Texas Instruments Incorporated.

634, 635

32-BIT PARALLEL ERROR DETECTION AND CORRECTION CIRCUITS

- Detects and Corrects single-bit errors
- Detects and Flags dual-bit errors
- Fast processing times

typical performance

TYPE	OUTPUT	DELAY	POWER
'ALS634	3-State		
'ALS635	O-C		

SN54ALS634 (JD) SN74ALS634 (JD)
SN54ALS635 (JD) SN74ALS635 (JD)

pin assignments

JD PACKAGES			
1	$\overline{MERR}$	25	CB3
2	$\overline{ERR}$	26	CB2
3	DB0	27	CB1
4	DB1	28	CB0
5	DB2	29	DB16
6	DB3	30	DB17
7	DB4	31	DB18
8	DB5	32	DB19
9	$\overline{OEDB}$	33	DB20
10	DB6	34	DB21
11	DB7	35	DB22
12	GND	36	DB23
13	DB8	37	GND
14	DB9	38	DB24
15	DB10	39	DB25
16	DB11	40	DB26
17	DB12	41	DB27
18	DB13	42	DB28
19	DB14	43	DB29
20	DB15	44	DB30
21	CB6	45	DB31
22	CB5	46	S0
23	CB4	47	S1
24	$\overline{OECB}$	48	V_{CC}

For chip carrier information, contact the factory.

logic diagram (positive logic)

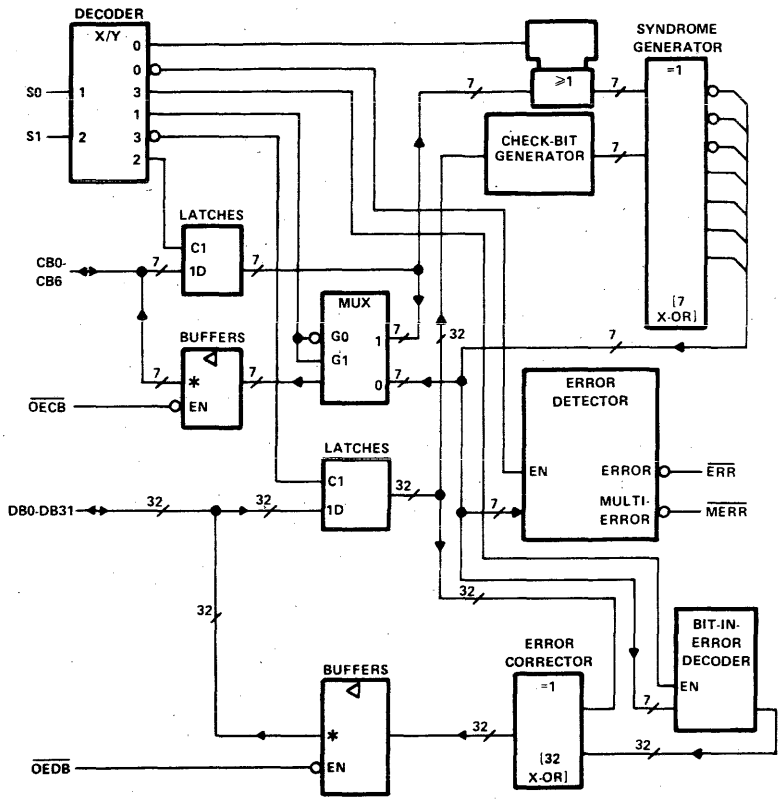

Copyright © 1983 by Texas Instruments Incorporated.

636, 637

8-BIT PARALLEL ERROR DETECTION AND CORRECTION CIRCUITS

- Fast processing times:
  - Write cycle: generates check word in 45 ns typical
  - Read cycle: flags errors in 27 ns typical
- Detects and corrects single bit error
- Detects and flags dual-bit errors

typical performance

TYPE	OUTPUT	DELAY	POWER
'LS636	3-State	27 ns	500 mW
'LS637	O-C	28 ns	450 mW

SN54LS636 (J) SN74LS636 (J,N)
SN54LS637 (J) SN74LS637 (J,N)

pin assignments

J, N PACKAGES			
1	DEF	11	CB4
2	DB0	12	nc
3	DB1	13	CB3
4	DB2	14	CB2
5	DB3	15	CB1
6	DB4	16	CB0
7	DB5	17	S0
8	DB6	18	S1
9	DB7	19	SEF
10	GND	20	V_{CC}

For chip carrier information, contact the factory.

functional block diagram

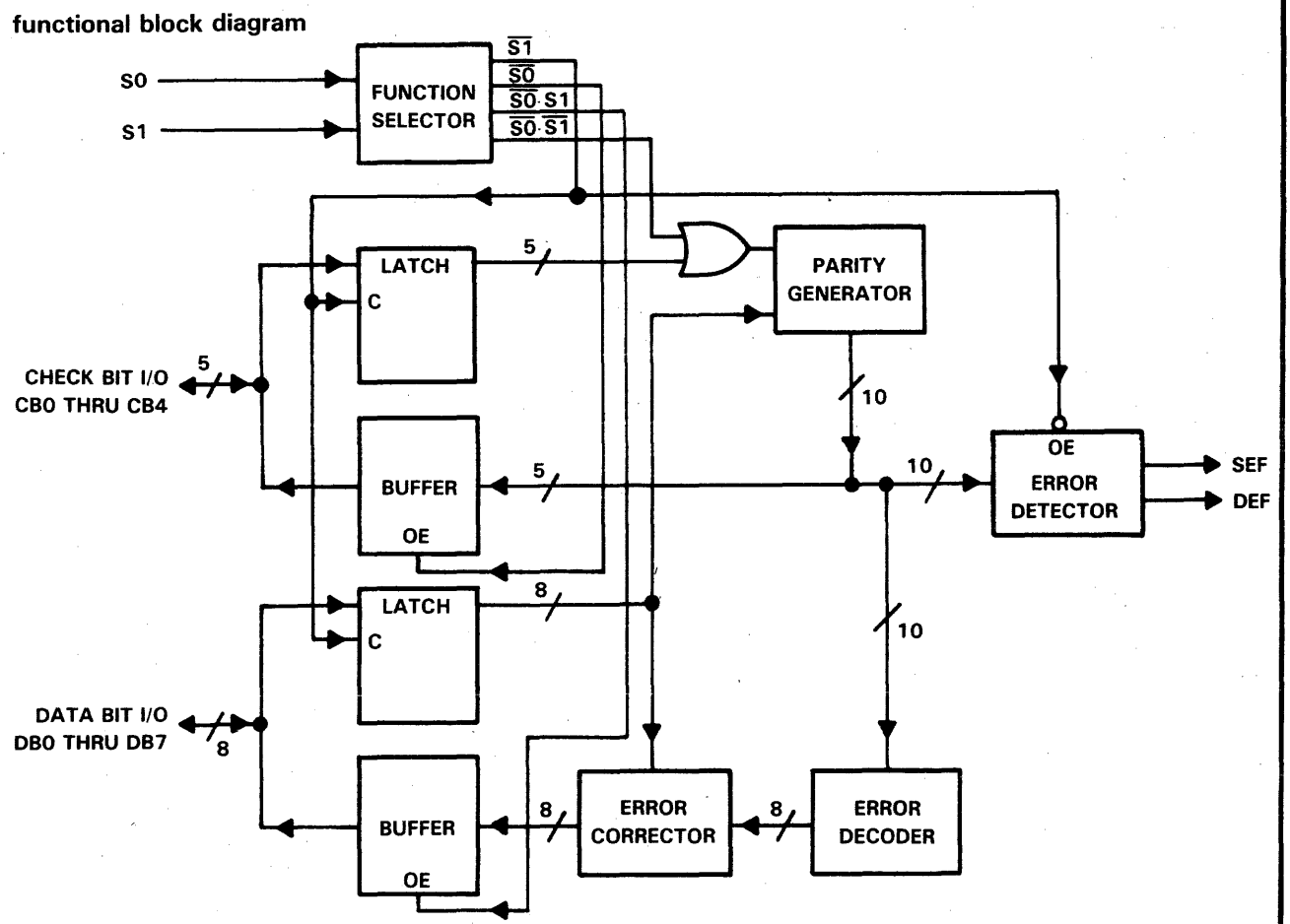

nc no internal connection.

Refer to data sheet in this section for additional information.

Copyright © 1983 by Texas Instruments Incorporated.

638, 639

OCTAL BUS TRANSCEIVERS

- Bidirectional bus transceivers
- "A" bus outputs are open-collector; "B" bus outputs are three-state
- 'ALS638, 'LS638 – inverting logic
- 'ALS639, 'LS639 – true logic

typical performance

TYPE	DELAY	MAX SOURCE CURRENT	MAX SINK CURRENT
SN54ALS638	5 ns	– 12 mA	12 mA
SN74ALS638	5 ns	– 15 mA	24 mA
SN74ALS638-1	5 ns	– 15 mA	48 mA
SN54ALS639	6 ns	– 12 mA	12 mA
SN74ALS639	6 ns	– 15 mA	24 mA
SN74ALS639-1	6 ns	– 15 mA	48 mA
SN54AS638	4 ns	– 12 mA	48 mA
SN74AS638	4 ns	– 15 mA	64 mA
SN54AS639	5 ns	– 12 mA	48 mA
SN74AS639	5 ns	– 15 mA	64 mA
SN54LS638	11 ns	– 12 mA	12 mA
SN74LS638	11 ns	– 15 mA	24 mA
SN54LS639	13.5 ns	– 12 mA	12 mA
SN74LS639	13.5 ns	– 15 mA	24 mA

SN54ALS638 (J,FH)	SN74ALS638 (N,FN)
	SN74ALS638-1 (N,FN)
SN54ALS639 (J,FH)	SN74ALS639 (N,FN)
	SN74ALS639-1 (N,FN)
SN54AS638 (J,FH)	SN74AS638 (N,FN)
SN54AS639 (J,FH)	SN74AS639 (N,FN)
SN54LS638 (J,FH)	SN74LS638 (J,N,FN)
SN54LS639 (J,FH)	SN74LS639 (J,N,FN)

logic symbol, 'ALS638, 'AS638, 'LS638†

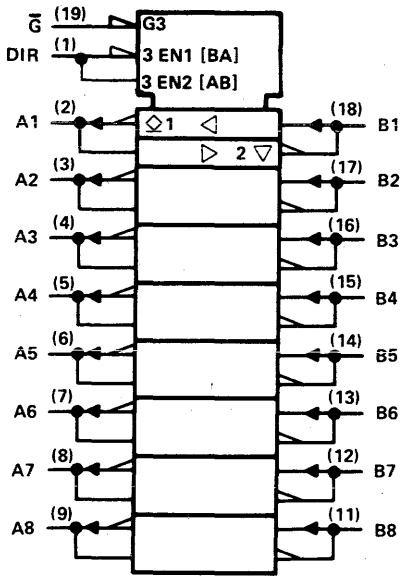

logic symbol, 'ALS639, 'AS639, 'LS639†

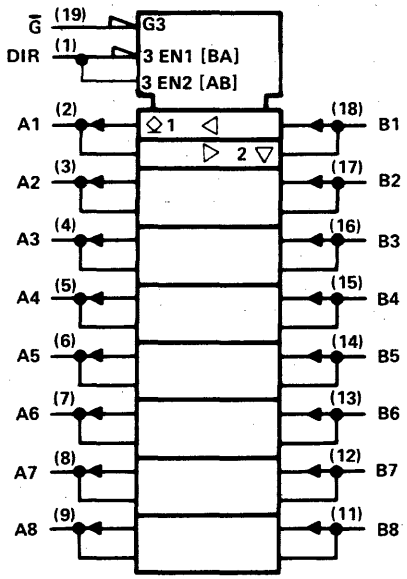

pin assignments

J, N PACKAGES			
1	DIR	11	B8
2	A1	12	B7
3	A2	13	B6
4	A3	14	B5
5	A4	15	B4
6	A5	16	B3
7	A6	17	B2
8	A7	18	B1
9	A8	19	G̅
10	GND	20	V_{CC}

FH, FN PACKAGES			
1	DIR	11	B8
2	A1	12	B7
3	A2	13	B6
4	A3	14	B5
5	A4	15	B4
6	A5	16	B3
7	A6	17	B2
8	A7	18	B1
9	A8	19	G̅
10	GND	20	V_{CC}

† Pin numbers shown on logic symbols are for J and N packages only.
nc – no internal connection.

Copyright © 1983 by Texas Instruments Incorporated.

TEXAS INSTRUMENTS
POST OFFICE BOX 225012 • DALLAS, TEXAS 75265

640, 641, 642
643, 644, 645

OCTAL BUS TRANSCEIVERS

TYPE	OUTPUT	DELAY	MAX SOURCE CURRENT	MAX SINK CURRENT
SN54ALS640A	3-State	5 ns	– 12 mA	12 mA
SN74ALS640A	3-State	5 ns	– 15 mA	24 mA
SN74ALS640A-1	3-State	5 ns	– 15 mA	48 mA
SN54ALS641	O-C	15 ns	N/A	12 mA
SN74ALS641	O-C	15 ns	N/A	24 mA
SN74ALS641-1	O-C	15 ns	N/A	48 mA
SN54ALS642	O-C	20 ns	N/A	12 mA
SN74ALS642	O-C	20 ns	N/A	24 mA
SN74ALS642-1	O-C	20 ns	N/A	48 mA
SN54ALS643	3-State	5 ns	– 12 mA	12 mA
SN74ALS643	3-State	5 ns	– 15 mA	24 mA
SN74ALS643-1	3-State	5 ns	– 15 mA	48 mA
SN54ALS644	O-C	20 ns	N/A	12 mA
SN74ALS644	O-C	20 ns	N/A	24 mA
SN74ALS644-1	O-C	20 ns	N/A	48 mA
SN54ALS645A	3-State	6 ns	– 12 mA	12 mA
SN74ALS645A	3-State	6 ns	– 15 mA	24 mA
SN74ALS645A-1	3-State	6 ns	– 15 mA	48 mA
SN54AS640	3-State	4 ns	– 12 mA	48 mA
SN74AS640	3-State	4 ns	– 15 mA	64 mA
SN54AS641	O-C	20 ns	N/A	48 mA
SN74AS641	O-C	20 ns	N/A	64 mA
SN54AS642	O-C	20 ns	N/A	48 mA
SN74AS642	O-C	20 ns	N/A	64 mA
SN54AS643	3-State	4 ns	– 12 mA	48 mA
SN74AS643	3-State	4 ns	– 15 mA	64 mA
SN54AS644	O-C	20 ns	N/A	48 mA
SN74AS644	O-C	20 ns	N/A	64 mA
SN54AS645	3-State	5 ns	– 12 mA	48 mA
SN74AS645	3-State	5 ns	– 12 mA	64 mA
SN54LS640	3-State	7 ns	– 12 mA	12 mA
SN74LS640	3-State	7 ns	– 15 mA	24 mA
SN74LS640-1	3-State	7 ns	– 15 mA	48 mA
SN54LS641	O-C	16.5 ns	N/A	12 mA
SN74LS641	O-C	16.5 ns	N/A	24 mA
SN74LS641-1	O-C	16.5 ns	N/A	48 mA
SN54LS642	O-C	16.5 ns	N/A	12 mA
SN74LS642	O-C	16.5 ns	N/A	24 mA
SN74LS642-1	O-C	16.5 ns	N/A	48 mA
SN54LS643	3-State	8.5 ns	– 12 mA	12 mA
SN74LS643	3-State	8.5 ns	– 15 mA	24 mA
SN74LS643-1	3-State	8.5 ns	– 15 mA	48 mA
SN54LS644	O-C	16.5 ns	N/A	12 mA
SN74LS644	O-C	16.5 ns	N/A	24 mA
SN74LS644-1	O-C	16.5 ns	N/A	48 mA
SN54LS645	3-State	9.5 ns	– 12 mA	12 mA
SN74LS645	3-State	9.5 ns	– 15 mA	24 mA
SN74LS645-1	3-State	9.5 ns	– 15 mA	48 mA

pin assignments

J, N PACKAGES				FH, FN PACKAGES			
1	DIR	11	B8	1	DIR	11	B8
2	A1	12	B7	2	A1	12	B7
3	A2	13	B6	3	A2	13	B6
4	A3	14	B5	4	A3	14	B5
5	A4	15	B4	5	A4	15	B4
6	A5	16	B3	6	A5	16	B3
7	A6	17	B2	7	A6	17	B2
8	A7	18	B1	8	A7	18	B1
9	A8	19	$\overline{G}$	9	A8	19	$\overline{G}$
10	GND	20	V_{CC}	10	GND	20	V_{CC}

SN54ALS640A (J,FH)
SN54ALS641 (J,FH)
SN54ALS642 (J,FH)
SN54ALS643 (J,FH)
SN54ALS644 (J,FH)
SN54ALS645A (J,FH)
SN54AS640 (J,FH)
SN54AS641 (J,FH)
SN54AS642 (J,FH)
SN54AS643 (J,FH)
SN54AS644 (J,FH)
SN54AS645 (J,FH)
SN54LS640 (J,FH)
SN54LS641 (J,FH)
SN54LS642 (J,FH)
SN54LS643 (J,FH)
SN54LS644 (J,FH)
SN54LS645 (J,FH)

SN74ALS640A (N,FN)
SN74ALS641 (N,FN)
SN74ALS642 (N,FN)
SN74ALS643 (N,FN)
SN74ALS644 (N,FN)
SN74ASL645A (N,FN)
SN74AS640 (N,FN)
SN74AS641 (N,FN)
SN74AS642 (N,FN)
SN74AS643 (N,FN)
SN74AS644 (N,FN)
SN74AS645 (N,FN)
SN74LS640 (J,N,FN)
SN74LS641 (J,N,FN)
SN74LS642 (J,N,FN)
SN74LS643 (J,N,FN)
SN74LS644 (J,N,FN)
SN74LS645 (J,N,FN)

SN74ALS640A-1 (N,FN)
SN74ALS641-1 (N,FN)
SN74ALS642-1 (N,FN)
SN74ALS643-1 (N,FN)
SN74ALS644-1 (N,FN)
SN74ALS645A-1 (N,FN)
SN74LS640-1 (J,N,FN)
SN74LS641-1 (J,N,FN)
SN74LS642-1 (J,N,FN)
SN74LS643-1 (J,N,FN)
SN74LS644-1 (J,N,FN)
SN74LS645-1 (J,N,FN)

† Pin numbers shown on logic symbols are for J and N packages only.
nc — no internal connection.

Copyright © 1983 by Texas Instruments Incorporated.

TEXAS INSTRUMENTS
POST OFFICE BOX 225012 • DALLAS, TEXAS 75265

© IC MASTER 1984

640, 641, 642
643, 644, 645 continued

logic symbol, 'ALS640A, 'AS640, 'LS640†

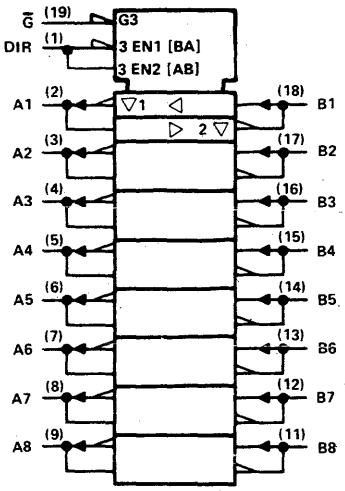

logic symbol, 'ALS641, 'AS641, 'LS641†

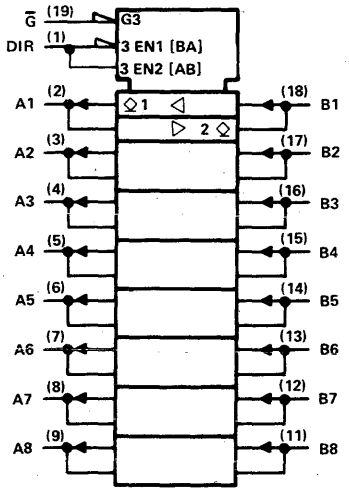

logic symbol, 'ALS642, 'AS642, 'LS642†

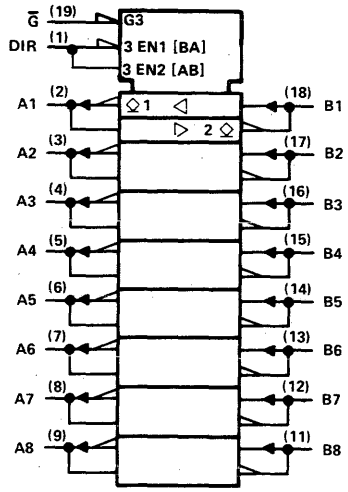

logic symbol, 'ALS643, 'AS643, 'LS643†

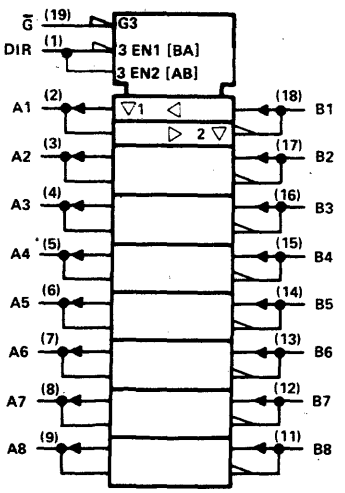

logic symbol, 'ALS644, 'AS644, 'LS644†

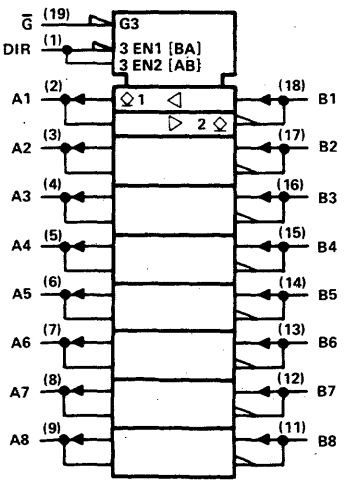

logic symbol, 'ALS645A, 'AS645, 'LS645†

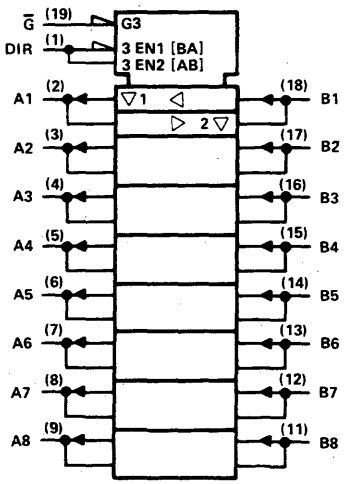

† Pin numbers shown on logic symbols are for J and N packages only.
nc — no internal connection.

Copyright © 1983 by Texas Instruments Incorporated.

646, 647, 648, 649

OCTAL BUS TRANSCEIVERS AND REGISTERS

- Bidirectional
- Independent registers for A and B busses

typical performance

TYPE	DELAY	MAX SOURCE CURRENT	MAX SINK CURRENT	OUTPUT	
				TYPE	INV
SN54ALS646		– 12 mA	12 mA	3-State	No
SN74ALS646		– 15 mA	24 mA	3-State	No
SN74ALS646-1		– 15 mA	48 mA	3-State	No
SN54ALS647		N/A	12 mA	O-C	No
SN74ALS647		N/A	24 mA	O-C	No
SN74ALS647-1		N/A	48 mA	O-C	No
SN54ALS648		– 12 mA	12 mA	3-State	Yes
SN74ALS648		– 15 mA	24 mA	3-State	Yes
SN74ALS648-1		– 15 mA	48 mA	3-State	Yes
SN54ALS649		N/A	12 mA	O-C	Yes
SN74ALS649		N/A	24 mA	O-C	Yes
SN74ALS649-1		N/A	48 mA	O-C	Yes
SN54AS646		– 12 mA	48 mA	3-State	No
SN74AS646		– 15 mA	64 mA	3-State	No
SN54AS648		– 12 mA	48 mA	3-State	Yes
SN74AS648		– 15 mA	64 mA	3-State	Yes
SN54LS646	19 ns	– 12 mA	12 mA	3-State	No
SN74LS646	19 ns	– 15 mA	24 mA	3-State	No
SN74LS647	25 ns	N/A	12 mA	O-C	No
SN74LS647	25 ns	N/A	24 mA	O-C	No
SN54LS648	20.5 ns	– 12 mA	12 mA	3-State	Yes
SN74LS648	20.5 ns	– 15 mA	24 mA	3-State	Yes
SN54LS649	25 ns	N/A	12 mA	O-C	Yes
SN74LS649	25 ns	N/A	24 mA	O-C	Yes

SN54ALS646 (JT, FH)	SN74ALS646 (NT,FN)
	SN74ALS646-1 (NT,FN)
SN54ALS647 (JT,FH)	SN74ALS647 (NT,FN)
	SN74ALS647-1 (NT,FN)
SN54ALS648 (JT,FH)	SN74ALS648 (NT,FN)
	SN74ALS648-1 (NT,FN)
SN54ALS649 (JT,FH)	SN74ALS649 (NT,FN)
	SN74ALS649-1 (NT,FN)
SN54AS646 (JT,FH)	SN74AS646 (NT,FN)
SN54AS648 (JT,FH)	SN74AS648 (NT,FN)
SN54LS646 (JT,FH)	SN74LS646 (JT,NT,FN)
SN54LS647 (JT,FH)	SN74LS647 (JT,NT,FN)
SN54LS648 (JT,FH)	SN74LS648 (JT,NT,FN)
SN54LS649 (JT,FH)	SN74LS649 (JT,NT,FN)

pin assignments

†JT, NT PACKAGES				FH, FN PACKAGES			
1	CAB	13	B8	1	nc	15	nc
2	SAB	14	B7	2	CAB	16	B8
3	DIR	15	B6	3	SAB	17	B7
4	A1	16	B5	4	DIR	18	B6
5	A2	17	B4	5	A1	19	B5
6	A3	18	B3	6	A2	20	B4
7	A4	19	B2	7	A3	21	B3
8	A5	20	B1	8	nc	22	nc
9	A6	21	$\overline{G}$	9	A4	23	B2
10	A7	22	SBA	10	A5	24	B1
11	A8	23	CBA	11	A6	25	$\overline{G}$
12	GND	24	V_{CC}	12	A7	26	SBA
				13	A8	27	CBA
				14	GND	28	V_{CC}

†Pin numbers shown on logic symbols are for JT and NT packages only.

nc — no internal connection.

Copyright © 1983 by Texas Instruments Incorporated.

TEXAS INSTRUMENTS
POST OFFICE BOX 225012 • DALLAS, TEXAS 75265

© IC MASTER 1984

646, 647, 648, 649 continued

logic symbol, 'ALS646, 'AS646, 'LS646†

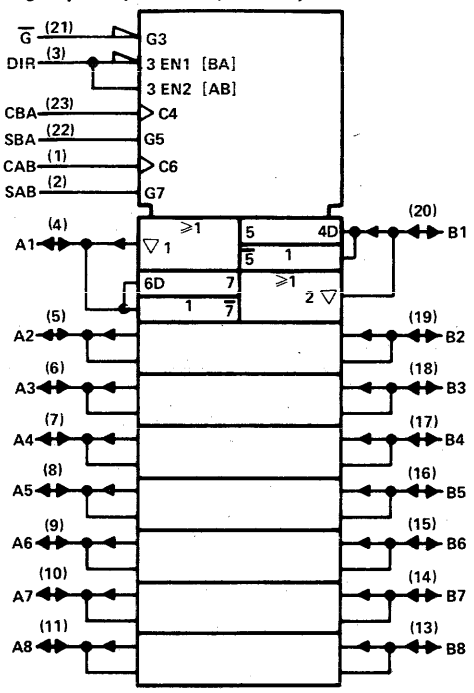

logic symbol, 'ALS647, 'LS647†

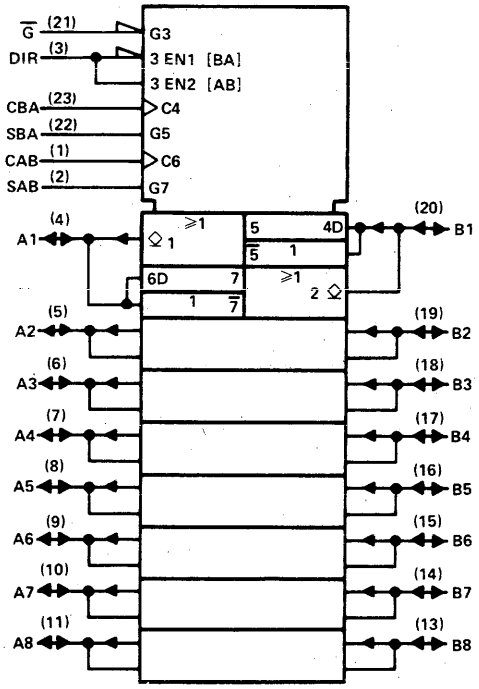

logic symbol, 'ALS648, 'AS648, 'LS648†

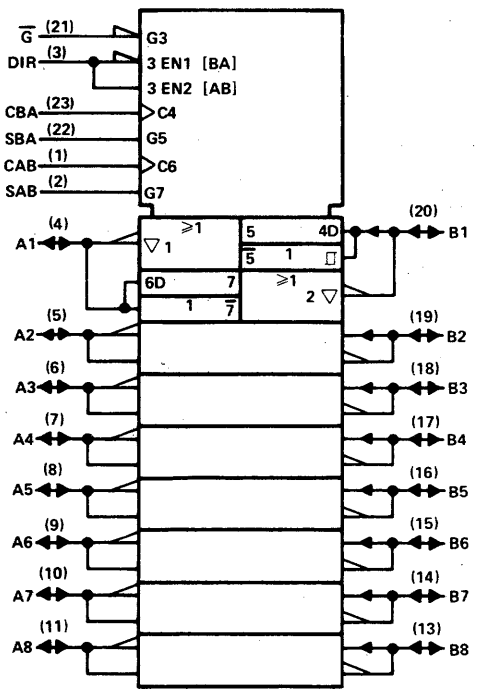

logic symbol, 'ALS649, 'LS649†

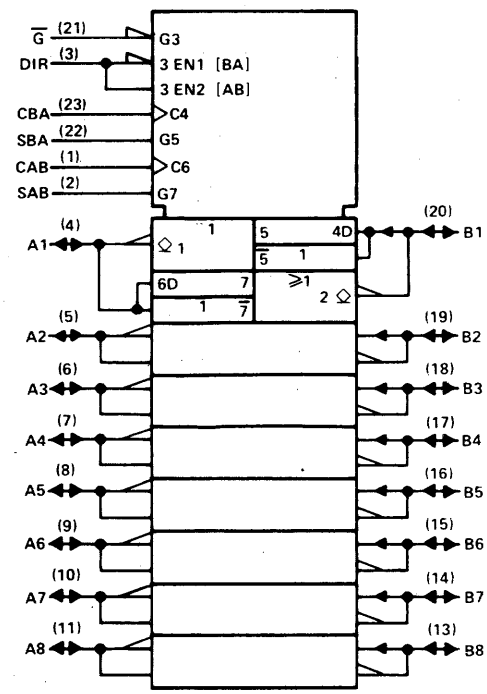

†Pin numbers shown on logic symbols are for JT and NT packages only.

nc — no internal connection.

Copyright © 1983 by Texas Instruments Incorporated.

651, 652

OCTAL BUS TRANSCEIVERS AND REGISTERS

- Bidirectional
- Independent registers for A and B busses

typical performance

TYPE	MAX SOURCE CURRENT	MAX SINK CURRENT	OUTPUT TYPE A	OUTPUT TYPE B	OUTPUT INV A,B
SN54ALS651	– 12 mA	12 mA	3-State		Yes
SN74ALS651	– 15 mA	24 mA	3-State		Yes
SN74ALS651-1	– 15 mA	48 mA	3-State		Yes
SN54ALS652	– 12 mA	12 mA	3-State		No
SN74ALS652	– 15 mA	24 mA	3-State		No
SN74ALS652-1	– 15 mA	48 mA	3-State		No
SN54AS651	– 12 mA	48 mA	3-State		Yes
SN74AS651	– 15 mA	64 mA	3-State		Yes
SN54AS652	– 12 mA	48 mA	3-State		No
SN74AS652	– 15 mA	64 mA	3-State		No
SN54LS651	– 12 mA	12 mA	3-State		Yes
SN74LS651	– 15 mA	24 mA	3-State		Yes
SN54LS652	– 12 mA	12 mA	3-State		No
SN74LS652	– 15 mA	24 mA	3-State		No

logic symbol, 'ALS651, 'AS651, 'LS651†

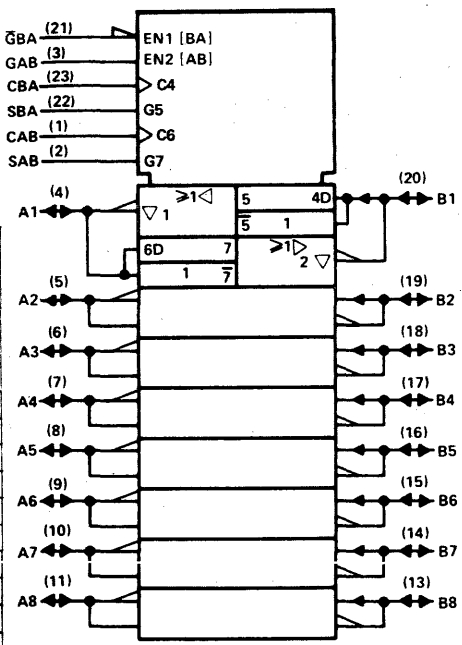

pin assignments

JT, NT PACKAGES			
1	CAB	13	B8
2	SAB	14	B7
3	GAB	15	B6
4	A1	16	B5
5	A2	17	B4
6	A3	18	B3
7	A4	19	B2
8	A5	20	B1
9	A6	21	$\overline{G}$BA
10	A7	22	SBA
11	A8	23	CBA
12	GND	24	V_{CC}

FH, FN PACKAGES			
1	nc	15	nc
2	CAB	16	B8
3	SAB	17	B7
4	GAB	18	B6
5	A1	19	B5
6	A2	20	B4
7	A3	21	B3
8	nc	22	nc
9	A4	23	B2
10	A5	24	B1
11	A6	25	$\overline{G}$BA
12	A7	26	SBA
13	A8	27	CBA
14	GND	28	V_{CC}

SN54ALS651 (JT,FH)	SN74ALS651 (NT,FN)
	SN74ALS651-1 (NT,FN)
SN54ALS652 (JT,FH)	SN74ALS652 (NT,FN)
	SN74ALS652-1 (NT,FN)
SN54AS651 (JT,FH)	SN74AS651 (NT,FN)
SN54AS652 (JT,FH)	SN74AS652 (NT,FN)
SN54LS651 (JT,FH)	SN74LS651 (JT,NT,FN)
SN54LS652 (JT,FH)	SN74LS652 (JT,NT,FN)

logic symbol, 'ALS652, 'AS652, 'LS652†

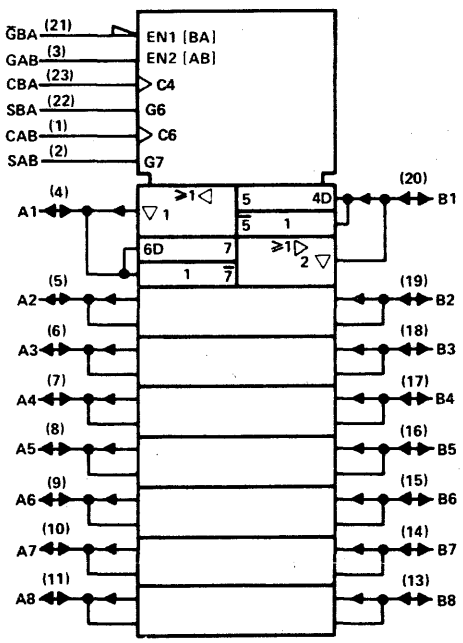

†Pin numbers shown on logic symbols are for JT and NT packages only.
nc – no internal connection.

Copyright © 1983 by Texas Instruments Incorporated.

653, 654

OCTAL BUS TRANSCEIVERS AND REGISTERS

- Bidirectional
- Independent registers for A and B busses

typical performance

TYPE	MAX SOURCE CURRENT	MAX SINK CURRENT	OUTPUT TYPE A	OUTPUT TYPE B	INV A, B
SN54ALS653	−12 mA	12 mA	O-C	3-State	Yes
SN74ALS653	−15 mA	24 mA	O-C	3-State	Yes
SN74ALS653-1	−15 mA	48 mA	O-C	3-State	Yes
SN54ALS654	−12 mA	12 mA	O-C	3-State	No
SN74ALS654	−15 mA	24 mA	O-C	3-State	No
SN74ALS654-1	−15 mA	48 mA	O-C	3-State	No
SN54LS653	−12 mA	12 mA	O-C	3-State	Yes
SN74LS653	−15 mA	24 mA	O-C	3-State	Yes
SN54LS654	−12 mA	12 mA	O-C	3-State	No
SN74LS654	−15 mA	24 mA	O-C	3-State	No

SN54ALS653 (JT,FH) SN74ALS653 (NT,FN)
SN54ALS654 (JT,FH) SN74ALS653-1 (NT,FN)
SN74ALS654 (NT,FN)
SN74ALS654-1 (NT,FN)
SN54LS653 (JT,FH) SN74LS653 (JT,NT,FN)
SN54LS654 (JT,FH) SN74LS654 (JT,NT,FN)

logic symbol, 'ALS653, 'LS653†

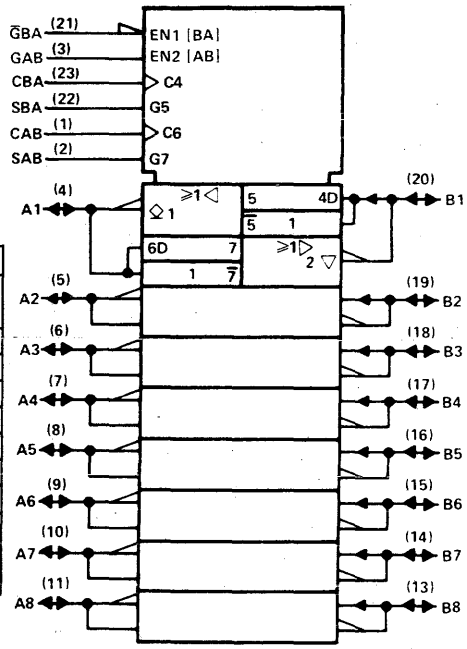

pin assignments

JT, NT PACKAGES			
1	CAB	13	B8
2	SAB	14	B7
3	GAB	15	B6
4	A1	16	B5
5	A2	17	B4
6	A3	18	B3
7	A4	19	B2
8	A5	20	B1
9	A6	21	GBA
10	A7	22	SBA
11	A8	23	CBA
12	GND	24	V_{CC}

FH, FN PACKAGES			
1	nc	15	nc
2	CAB	16	B8
3	SAB	17	B7
4	GAB	18	B6
5	A1	19	B5
6	A2	20	B4
7	A3	21	B3
8	nc	22	nc
9	A4	23	B2
10	A5	24	B1
11	A6	25	GBA
12	A7	26	SBA
13	A8	27	CBA
14	GND	28	V_{CC}

logic symbol, 'ALS654, 'LS654†

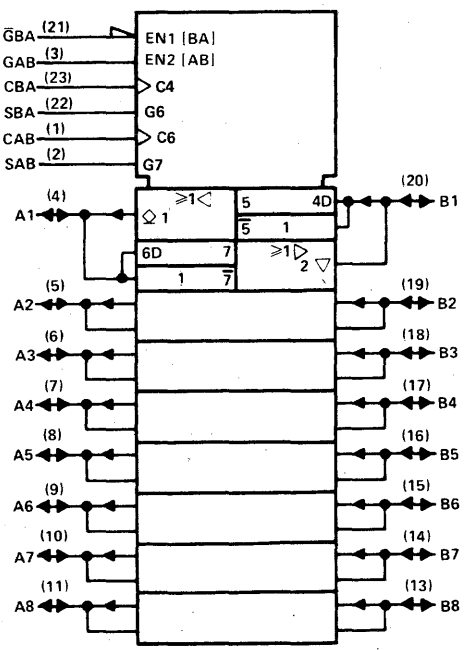

† Pin numbers shown on logic symbols are for JT and NT packages only.
nc − no internal connection.

Copyright © 1983 by Texas Instruments Incorporated.

668, 669

SYNCHRONOUS 4-BIT UP/ DOWN COUNTERS

- Programmable, look-ahead
- Decade counter ('LS668)
- Binary counter ('LS669)

typical performance

TYPE	COUNT FREQ	PARALLEL LOAD	TOTAL POWER
'LS668	32 MHz	Sync	100 mW
'LS669	32 MHz	Sync	100 mW

SN54LS668 (J,FH) SN74LS668 (J,N,FN)
SN54LS669 (J,FH) SN74LS669 (J,N,FN)

logic symbol, 'LS668†

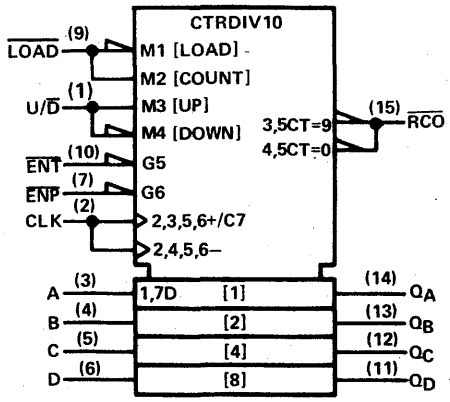

pin assignments

J, N PACKAGES				FH, FN PACKAGES			
1	U/D	9	LOAD	1	nc	11	nc
2	CLK	10	ENT	2	U/D	12	LOAD
3	A	11	Q_D	3	CLK	13	ENT
4	B	12	Q_C	4	A	14	Q_D
5	C	13	Q_B	5	B	15	Q_C
6	D	14	Q_A	6	nc	16	nc
7	ENP	15	RCO	7	C	17	Q_B
8	GND	16	V_{CC}	8	D	18	Q_A
				9	ENP	19	RCO
				10	GND	20	V_{CC}

logic symbol, 'LS669†

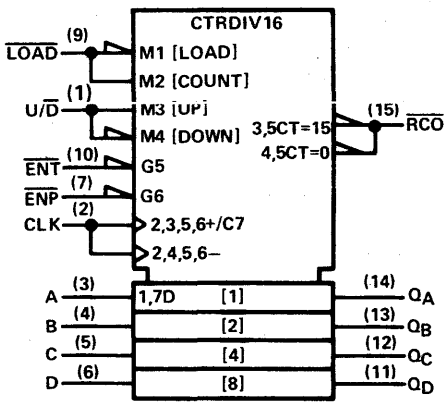

670

4-BY-4 REGISTER FILES

- 3-state outputs
- Simultaneous read/write
- Expandable to 1024 words

typical performance

ADDRESS TIME	ENABLE TIME	POWER/ BIT
24 ns	19 ns	9.3 mW

SN54LS670 (J,FH) SN74LS670 (J,N,FN)

logic symbol†

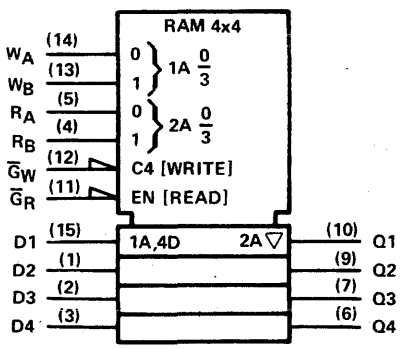

pin assignments

J, N PACKAGES				FH, FN PACKAGES			
1	D2	9	Q2	1	nc	11	nc
2	D3	10	Q1	2	D2	12	Q2
3	D4	11	$\overline{G}_R$	3	D3	13	Q1
4	R_B	12	$\overline{G}_W$	4	D4	14	$\overline{G}_R$
5	R_A	13	W_B	5	R_B	15	$\overline{G}_W$
6	Q4	14	W_A	6	nc	16	nc
7	Q3	15	D1	7	R_A	17	W_B
8	GND	16	V_{CC}	8	Q4	18	W_A
				9	Q3	19	D1
				10	GND	20	V_{CC}

† Pin numbers shown on logic symbols are for J and N packages only.
nc — no internal connection.

Copyright © 1983 by Texas Instruments Incorporated.

TEXAS INSTRUMENTS
POST OFFICE BOX 225012 • DALLAS, TEXAS 75265

© IC MASTER 1984

671, 672

4-BIT UNIVERSAL SHIFT REGISTERS/LATCHES WITH THREE-STATE OUTPUTS

- '671 has direct SR clear
- '672 has synchronous SR clear
- Expandable to any word length
- Multiplexed outputs for shift register or latched data
- Four modes of shift register
  - Inhibit clock
  - Shift right
  - Shift left
  - Parallel load

typical performance

TYPE	TOTAL POWER
'LS671	170 mW
'LS672	170 mW

SN54LS671 (J,FH) SN74LS671 (J,N,FN)
SN54LS672 (J,FH) SN74LS672 (J,N,FN)

logic symbol, 'LS671†

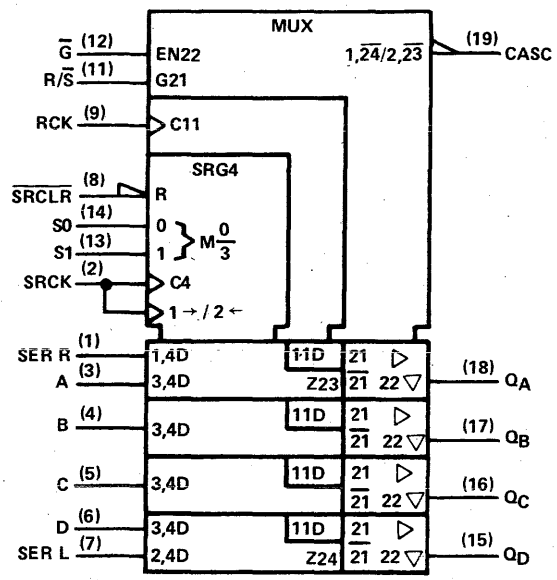

logic symbol, 'LS672†

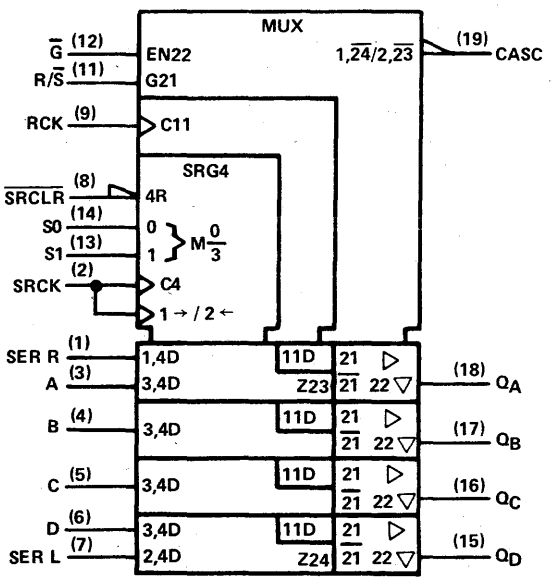

pin assignments

J, N PACKAGES			
1	SER R	11	R/S̅
2	SRCK	12	G̅
3	A	13	S1
4	B	14	S0
5	C	15	Q_D
6	D	16	Q_C
7	SER L	17	Q_B
8	SRCLR̅	18	Q_A
9	RCK	19	CASC
10	GND	20	V_{CC}

FH, FN PACKAGES			
1	SER R	11	R/S̅
2	SRCK	12	G̅
3	A	13	S1
4	B	14	S0
5	C	15	Q_D
6	D	16	Q_C
7	SER L	17	Q_B
8	SRCLR̅	18	Q_A
9	RCK	19	CASC
10	GND	20	V_{CC}

† Pin numbers shown on logic symbols are for J and N packages only.
nc — no internal connection.

Copyright © 1983 by Texas Instruments Incorporated.

TEXAS INSTRUMENTS
POST OFFICE BOX 225012 • DALLAS, TEXAS 75265

673

16-BIT SHIFT REGISTERS

- 16-bit serial-in/serial-out shift register with three-state outputs
- 16-bit parallel-out storage register
- Converts serial to parallel data flow

typical performance

TYPE	SHIFT FREQ	TOTAL POWER
'LS673	20 MHz	255 mW

SN54LS673 (J,FH) SN74LS673 (J,N,FN)

logic symbol†

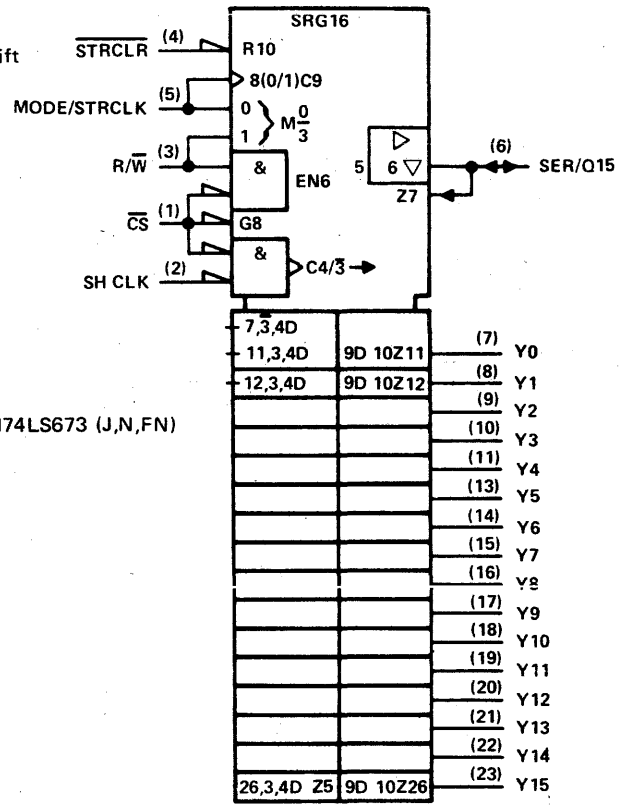

pin assignments

J, N PACKAGES			
1	CS	13	Y5
2	SH CLK	14	Y6
3	R/W	15	Y7
4	STRCLR	16	Y8
5	MODE/STRCLR	17	Y9
6	SER/Q15	18	Y10
7	Y0	19	Y11
8	Y1	20	Y12
9	Y2	21	Y13
10	Y3	22	Y14
11	Y4	23	Y15
12	GND	24	V_{CC}

FH, FN PACKAGES			
1	nc	15	nc
2	CS	16	Y5
3	SH CLK	17	Y6
4	R/W	18	Y7
5	STRCLR	19	Y8
6	MODE/STRCLR	20	Y9
7	SER/Q15	21	Y10
8	nc	22	nc
9	Y0	23	Y11
10	Y1	24	Y12
11	Y2	25	Y13
12	Y3	26	Y14
13	Y4	27	Y15
14	GND	28	V_{CC}

674

16-BIT SHIFT REGISTER

- Performs parallel to serial conversion
- Three-state outputs

typical performance

TYPE	SHIFT FREQ	TOTAL POWER
'LS674	20 MHz	125 mW

SN54LS674 (J,FH) SN74LS674 (J,N,FN)

logic symbol†

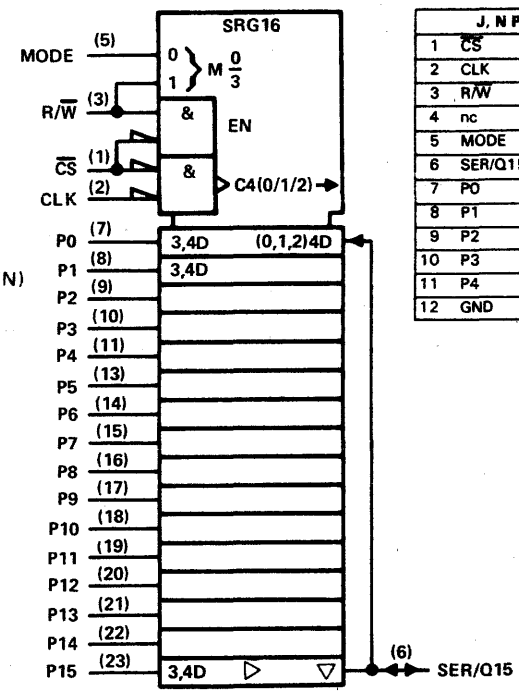

pin assignments

J, N PACKAGES			
1	CS	13	P5
2	CLK	14	P6
3	R/W	15	P7
4	nc	16	P8
5	MODE	17	P9
6	SER/Q15	18	P10
7	P0	19	P11
8	P1	20	P12
9	P2	21	P13
10	P3	22	P14
11	P4	23	P15
12	GND	24	V_{CC}

FH, FN PACKAGES			
1	nc	15	nc
2	CS	16	P5
3	CLK	17	P6
4	R/W	18	P7
5	nc	19	P8
6	MODE	20	P9
7	SER/Q15	21	P10
8	nc	22	nc
9	P0	23	P11
10	P1	24	P12
11	P2	25	P13
12	P3	26	P14
13	P4	27	P15
14	GND	28	V_{CC}

† Pin numbers shown on logic symbols are for J and N packages only.
nc — no internal connection.

Copyright © 1983 by Texas Instruments Incorporated.

677, 678

ADDRESS COMPARATORS

- 'ALS677 is a 16-bit to 4-bit comparator with enable
- 'ALS678 is a 16-bit to 4-bit comparator with latch

typical performance

TYPE	DELAY	POWER
'ALS677		
'ALS678		

SN54ALS677 (JT,FH) SN74ALS677 (NT,FN)
SN54ALS678 (JT,FH) SN74ALS678 (NT,FN)

logic symbol, 'ALS677†

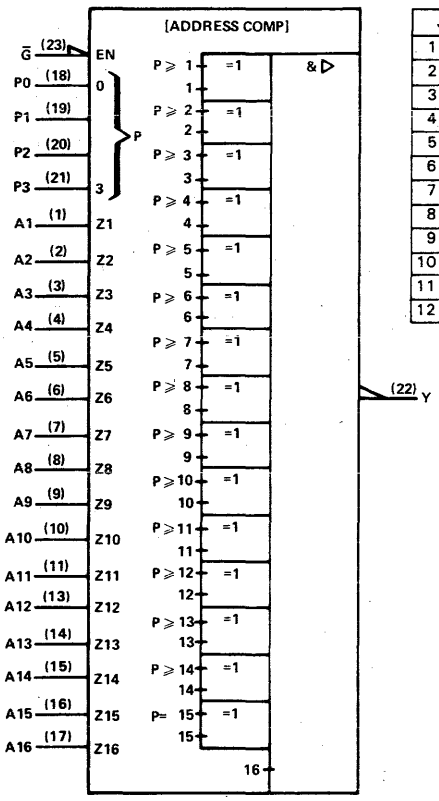

pin assignments, 'ALS677

JT, NT PACKAGES				FH, FN PACKAGES			
1	A1	13	A12	1	nc	15	nc
2	A2	14	A13	2	A1	16	A12
3	A3	15	A14	3	A2	17	A13
4	A4	16	A15	4	A3	18	A14
5	A5	17	A16	5	A4	19	A15
6	A6	18	P0	6	A5	20	A16
7	A7	19	P1	7	A6	21	P0
8	A8	20	P2	8	nc	22	nc
9	A9	21	P3	9	A7	23	P1
10	A10	22	Y	10	A8	24	P2
11	A11	23	$\overline{G}$	11	A9	25	P3
12	GND	24	V_{CC}	12	A10	26	Y
				13	A11	27	$\overline{G}$
				14	GND	28	V_{CC}

logic symbol, 'ALS678†

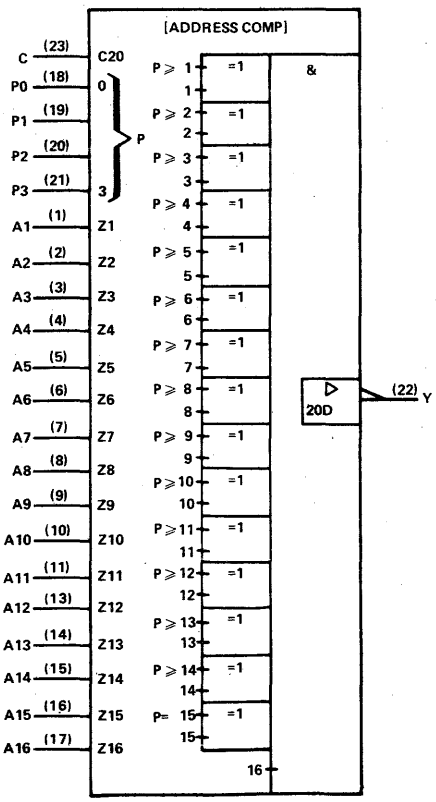

pin assignments, 'ALS678

JT, NT PACKAGES				FH, FN PACKAGES			
1	A1	13	A12	1	nc	15	nc
2	A2	14	A13	2	A1	16	A12
3	A3	15	A14	3	A2	17	A13
4	A4	16	A15	4	A3	18	A14
5	A5	17	A16	5	A4	19	A15
6	A6	18	P0	6	A5	20	A16
7	A7	19	P1	7	A6	21	P0
8	A8	20	P2	8	nc	22	nc
9	A9	21	P3	9	A7	23	P1
10	A10	22	Y	10	A8	24	P2
11	A11	23	C	11	A9	25	P3
12	GND	24	V_{CC}	12	A10	26	Y
				13	A11	27	C
				14	GND	28	V_{CC}

†Pin numbers shown on logic symbols are for JT and NT packages only.
nc — no internal connection.

Copyright © 1983 by Texas Instruments Incorporated.

TEXAS INSTRUMENTS
POST OFFICE BOX 225012 • DALLAS, TEXAS 75265

679, 680

ADDRESS COMPARATORS

- 'ALS679 is a 12-bit to 4-bit comparator with enable
- 'ALS680 is a 12-bit to 4-bit comparator with latch

typical performance

TYPE	DELAY	POWER
'ALS679		
'ALS680		

SN54ALS679 (J,FH) SN74ALS679 (N,FN)
SN54ALS680 (J,FH) SN74ALS680 (N,FN)

logic symbol, 'ALS679†

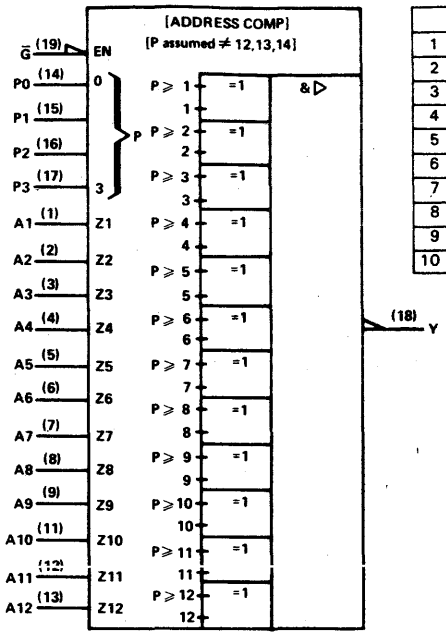

pin assignments, 'ALS679

J, N PACKAGES				FH, FN PACKAGES			
1	A1	11	A10	1	A1	11	A10
2	A2	12	A11	2	A2	12	A11
3	A3	13	A12	3	A3	13	A12
4	A4	14	P0	4	A4	14	P0
5	A5	15	P1	5	A5	15	P1
6	A6	16	P2	6	A6	16	P2
7	A7	17	P3	7	A7	17	P3
8	A8	18	Y	8	A8	18	Y
9	A9	19	G̅	9	A9	19	G̅
10	GND	20	V_{CC}	10	GND	20	V_{CC}

logic symbol, 'ALS680†

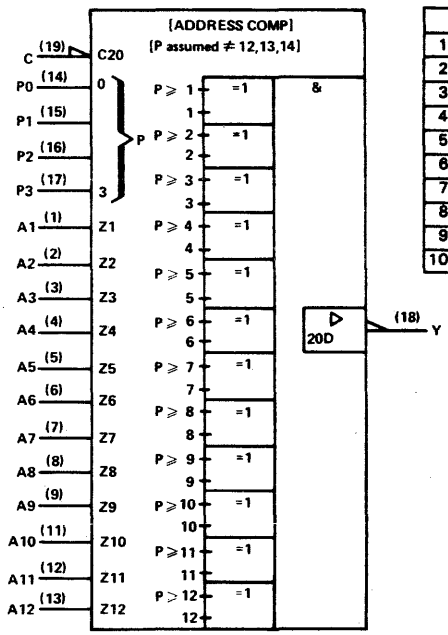

pin assignments, 'ALS680

J, N PACKAGES				FH, FN PACKAGES			
1	A1	11	A10	1	A1	11	A10
2	A2	12	A11	2	A2	12	A11
3	A3	13	A12	3	A3	13	A12
4	A4	14	P0	4	A4	14	P0
5	A5	15	P1	5	A5	15	P1
6	A6	16	P2	6	A6	16	P2
7	A7	17	P3	7	A7	17	P3
8	A8	18	Y	8	A8	18	Y
9	A9	19	C	9	A9	19	C
10	GND	20	V_{CC}	10	GND	20	V_{CC}

†Pin numbers shown on logic symbols are for J and N packages only.
nc — no internal connection.

See ALS/AS availability at front of this Product Guide.

Copyright © 1983 by Texas Instruments Incorporated.

TEXAS INSTRUMENTS
POST OFFICE BOX 225012 • DALLAS, TEXAS 75265

© IC MASTER 1984

681

4-BIT PARALLEL BINARY ACCUMULATORS

- Contains two synchronous registers
- B register frequency = 20 MHz
- Arithmetic operations include B minus A and A minus B
- Bus-driving I/O ports

typical performance

TYPE	LOAD TIME	ACC TIME
'LS681	75 ns	50 ns

SN54LS681 (J,FH)

SN74LS681 (J,N,FN)

logic symbol†

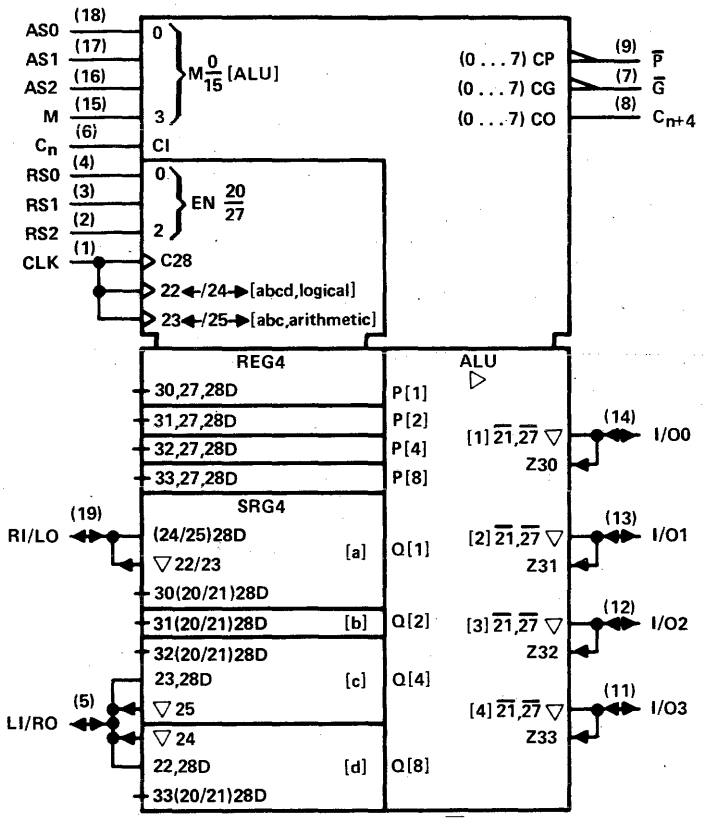

pin assignments

J, N PACKAGES			
1	CLK	11	I/O3
2	RS2	12	I/O2
3	RS1	13	I/O1
4	RS0	14	I/O0
5	LI/RO	15	M
6	C_n	16	AS2
7	$\overline{G}$	17	AS1
8	C_{n+4}	18	AS0
9	$\overline{P}$	19	RI/LO
10	GND	20	V_{CC}

FH, FN PACKAGES			
1	CLK	11	I/O3
2	RS2	12	I/O2
3	RS1	13	I/O1
4	RS0	14	I/O0
5	LI/RO	15	M
6	C_n	16	AS2
7	$\overline{G}$	17	AS1
8	C_{n+4}	18	AS0
9	$\overline{P}$	19	RI/LO
10	GND	20	V_{CC}

†Pin numbers shown on logic symbols are for J and N packages only.

nc — no internal connection.

Copyright © 1983 by Texas Instruments Incorporated.

TEXAS INSTRUMENTS
POST OFFICE BOX 225012 • DALLAS, TEXAS 75265

682, 683, 684, 685

8-BIT IDENTITY COMPARATORS

- Compares two 8-bit words
- 'LS682 and 'LS683 includes 20-kilohm pull-up resistor on Q inputs

typical performance

TYPE	COMPARE TIME	TYPE OUTPUT	TOTAL POWER
'LS682	14 ns	Totem Pole	210 mW
'LS683	24 ns	O-C	210 mW
'LS684	16 ns	Totem Pole	200 mW
'LS685	24 ns	O-C	200 mW

SN54LS682 (J,FH) SN74LS682 (J,N,FN)
SN54LS683 (J,FH) SN74LS683 (J,N,FN)
SN54LS684 (J,FH) SN74LS684 (J,N,FN)
SN54LS685 (J,FH) SN74LS685 (J,N,FN)

logic symbol, 'LS682, 'LS684 †

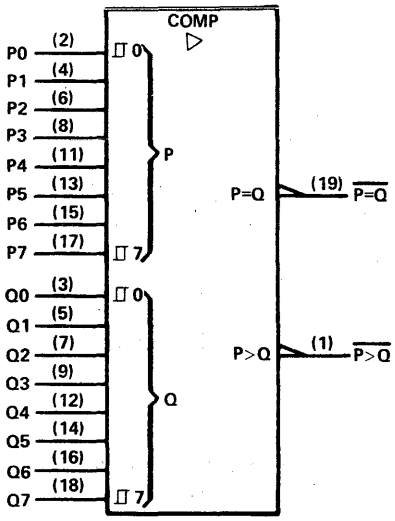

logic symbol, 'LS683, 'LS685†

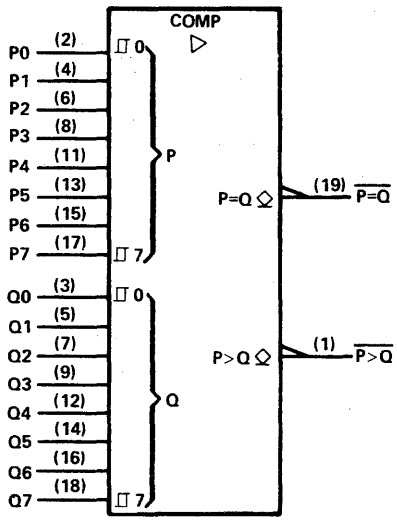

pin assignments

J, N PACKAGES				FH, FN PACKAGES			
1	P>Q	11	P4	1	P>Q	11	P4
2	P0	12	Q4	2	P0	12	Q4
3	Q0	13	P5	3	Q0	13	P5
4	P1	14	Q5	4	P1	14	Q5
5	Q1	15	P6	5	Q1	15	P6
6	P2	16	Q6	6	P2	16	Q6
7	Q2	17	P7	7	Q2	17	P7
8	P3	18	Q7	8	P3	18	Q7
9	Q3	19	P=Q	9	Q3	19	P=Q
10	GND	20	V_{CC}	10	GND	20	V_{CC}

† Pin numbers shown on logic symbols are for J and N packages only.
nc — no internal connection.

Copyright © 1983 by Texas Instruments Incorporated.

686, 687

8-BIT IDENTITY COMPARATORS

- Compares two 8-bit words

typical performance

TYPE	COMPARE TIME	TYPE OUTPUT	TOTAL POWER
'LS686	17 ns	Totem-Pole	220 mW
'LS687	22 ns	O-C	220 mW

SN54LS686 (JT,FH) SN74LS686 (JT,NT,FN)
SN54LS687 (JT,FH) SN74LS687 (JT,NT,FN)

logic symbol, 'LS686†

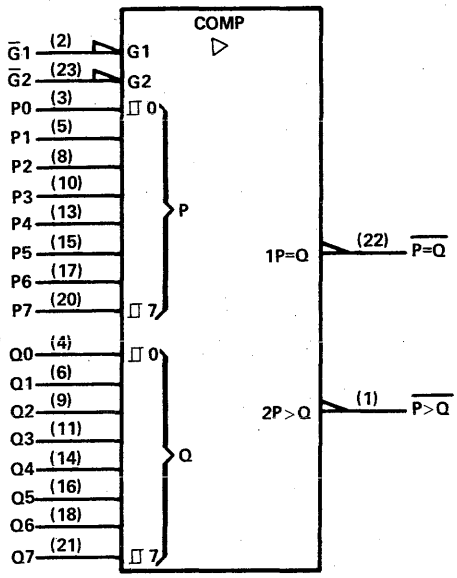

pin assignments

JT, NT PACKAGES				FH, FN PACKAGES			
1	P>Q	13	P4	1	nc	15	nc
2	G1	14	Q4	2	P>Q	16	P4
3	P0	15	P5	3	G1	17	Q4
4	Q0	16	Q5	4	P0	18	P5
5	P1	17	P6	5	Q0	19	Q5
6	Q1	18	Q6	6	P1	20	P6
7	nc	19	nc	7	Q1	21	Q6
8	P2	20	P7	8	nc	22	nc
9	Q2	21	Q7	9	nc	23	nc
10	P3	22	P=Q	10	P2	24	P7
11	Q3	23	G2	11	Q2	25	Q7
12	GND	24	V_{CC}	12	P3	26	P=Q
				13	Q3	27	G2
				14	GND	28	V_{CC}

logic symbol, 'LS687†

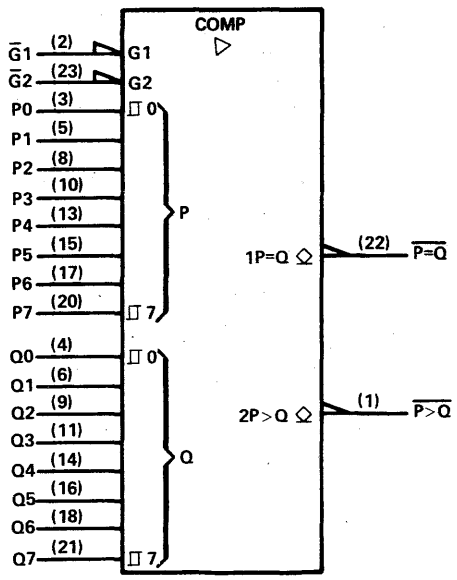

†Pin numbers shown on logic symbols are for JT and NT packages only.
nc — no internal connection.

Copyright © 1983 by Texas Instruments Incorporated.

688, 689

8-BIT IDENTITY COMPARATORS

- Compares two 8-bit words

typical performance

TYPE	COMPARE TIME	TYPE OUTPUT	TOTAL POWER
'ALS688	9.5 ns	Totem-Pole	37.5 mW
'ALS689	15..5 ns	O-C	37.5 mW
'LS688	14.5 ns	Totem-Pole	200 mW
'LS689	23 ns	O-C	200 mW

SN54ALS688 (J,FH) SN74ALS688 (J,FN)
SN54ALS689 (J,FH) SN74ALS689 (N,FN)
SN54LS688 (J,FH) SN74LS688 (J,N,FN)
SN54LS689 (J,FH) SN74LS689 (J,N,FN)

logic symbol, 'ALS688, 'LS688†

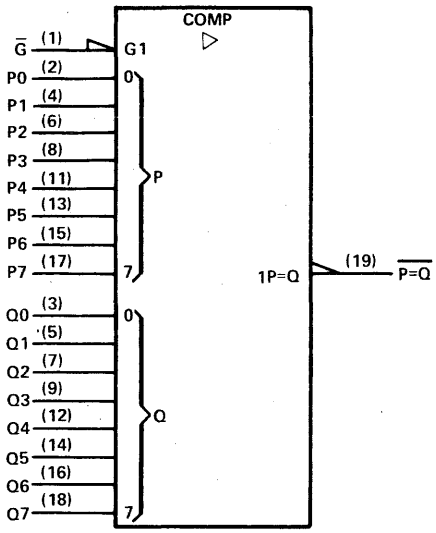

pin assignments

J, N PACKAGES				FH, FN PACKAGES			
1	$\overline{G}$	11	P4	1	$\overline{G}$	11	P4
2	P0	12	Q4	2	P0	12	Q4
3	Q0	13	P5	3	Q0	13	P5
4	P1	14	Q5	4	P1	14	Q5
5	Q1	15	P6	5	Q1	15	P6
6	P2	16	Q6	6	P2	16	Q6
7	Q2	17	P7	7	Q2	17	P7
8	P3	18	Q7	8	P3	18	Q7
9	Q3	19	$\overline{P=Q}$	9	Q3	19	$\overline{P=Q}$
10	GND	20	V_{CC}	10	GND	20	V_{CC}

logic symbol, 'ALS689, 'LS689†

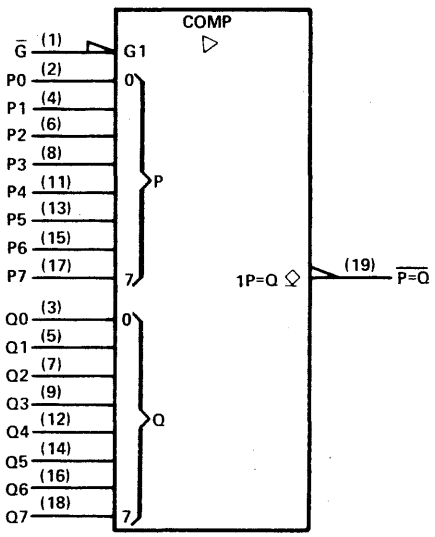

† Pin numbers shown on logic symbols are for J and N packages only.
nc — no internal connection.

See ALS/AS availability at front of this Product Guide.

Copyright © 1983 by Texas Instruments Incorporated.

TEXAS INSTRUMENTS
POST OFFICE BOX 225012 • DALLAS, TEXAS 75265

© IC MASTER 1984

690, 691
692, 693

SYNCHRONOUS COUNTERS WITH OUTPUT REGISTERS

- Multiplexed three-state outputs
- 4-bit counters/registers
- 'LS690, 'LS692: Decade counters
- 'LS691, 'LS693: Binary counters

typical performance

TYPE	CLEAR	MAX CLOCK FREQ	TOTAL POWER
'LS690	Direct	20 MHz	237 mW
'LS691	Direct	20 MHz	237 mW
'LS692	Sync-L	20 MHz	237 mW
'LS693	Sync-L	20 MHz	237 mW

SN54LS690 (J,FH) SN74LS690 (J,N,FN)
SN54LS691 (J,FH) SN74LS691 (J,N,FN)
SN54LS692 (J,FH) SN74LS692 (J,N,FN)
SN54LS693 (J,FH) SN74LS693 (J,N,FN)

logic symbol, 'LS690†

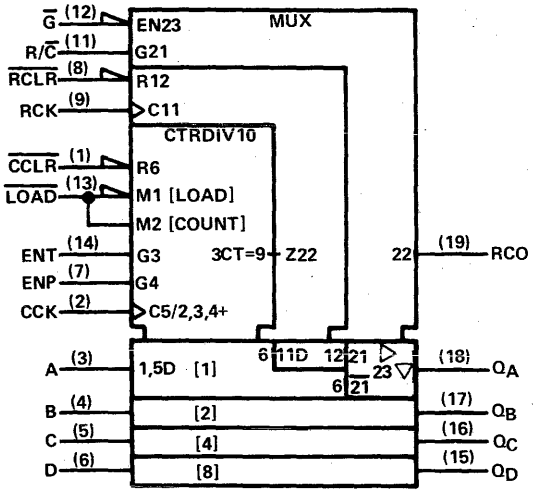

pin assignments

J, N PACKAGES			
1	$\overline{CCLR}$	11	R/$\overline{C}$
2	CCK	12	$\overline{G}$
3	A	13	$\overline{LOAD}$
4	B	14	ENT
5	C	15	Q_D
6	D	16	Q_C
7	ENP	17	Q_B
8	$\overline{RCLR}$	18	Q_A
9	RCK	19	RCO
10	GND	20	V_{CC}

FH, FN PACKAGES			
1	$\overline{CCLR}$	11	R/$\overline{C}$
2	CCK	12	$\overline{G}$
3	A	13	$\overline{LOAD}$
4	B	14	ENT
5	C	15	Q_D
6	D	16	Q_C
7	ENP	17	Q_B
8	$\overline{RCLR}$	18	Q_A
9	RCK	19	RCO
10	GND	20	V_{CC}

logic symbol, 'LS691†

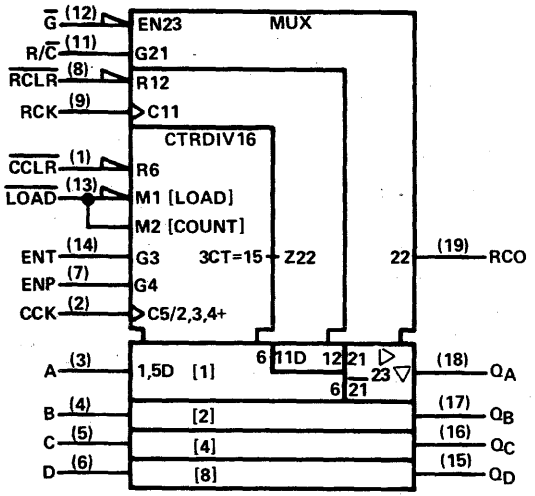

logic symbol, 'LS692†

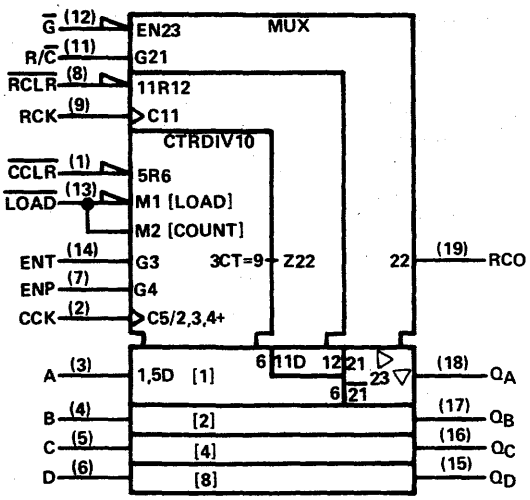

logic symbol, 'LS693†

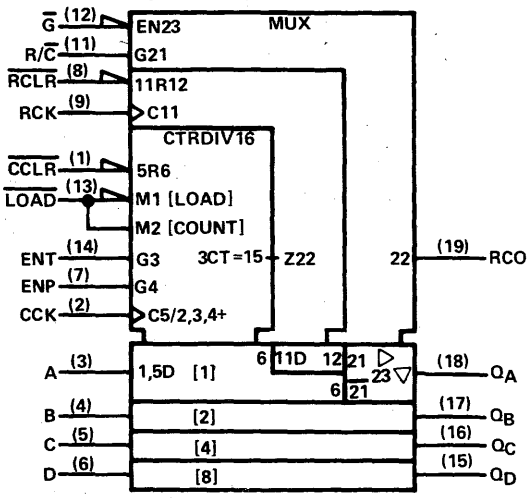

† Pin numbers shown on logic symbols are for J and N packages only.
nc — no internal connection.

Copyright © 1983 by Texas Instruments Incorporated.

TEXAS INSTRUMENTS
POST OFFICE BOX 225012 • DALLAS, TEXAS 75265

696, 697, 698, 699

SYNCHRONOUS UP/DOWN COUNTERS WITH OUTPUT REGISTERS, MULTIPLEXED THREE-STATE OUTPUTS

- 4-bit counters/registers
- 'LS696, 'LS698: Decade counters
- 'LS697, 'LS699: Binary counters

pin assignments

J, N PACKAGES				FH, FN PACKAGES			
1	U/$\overline{D}$	11	R/$\overline{C}$	1	U/D	11	R/$\overline{C}$
2	CCK	12	$\overline{G}$	2	CCK	12	$\overline{G}$
3	A	13	$\overline{LOAD}$	3	A	13	$\overline{LOAD}$
4	B	14	$\overline{ENT}$	4	B	14	$\overline{ENT}$
5	C	15	Q_D	5	C	15	Q_D
6	D	16	Q_C	6	D	16	Q_C
7	$\overline{ENP}$	17	Q_B	7	$\overline{ENP}$	17	Q_B
8	$\overline{CCLR}$	18	Q_A	8	$\overline{CCLR}$	18	Q_A
9	RCK	19	$\overline{RCO}$	9	RCK	19	$\overline{RCO}$
10	GND	20	V_{CC}	10	GND	20	V_{CC}

typical performance

TYPE	MAX CLOCK FREQ	CLEAR	TOTAL POWER
'LS696	20 MHz	Async-L	237 mW
'LS697	20 MHz	Async-L	237 mW
'LS698	20 MHz	Sync-L	237 mW
'LS699	20 MHz	Sync-L	237 mW

SN54LS696 (J,FH) SN74LS696 (J,N,FN)
SN54LS697 (J,FH) SN74LS697 (J,N,FN)
SN54LS698 (J,FH) SN74LS698 (J,N,FN)
SN54LS699 (J,FH) SN74LS699 (J,N,FN)

logic symbol, 'LS696†

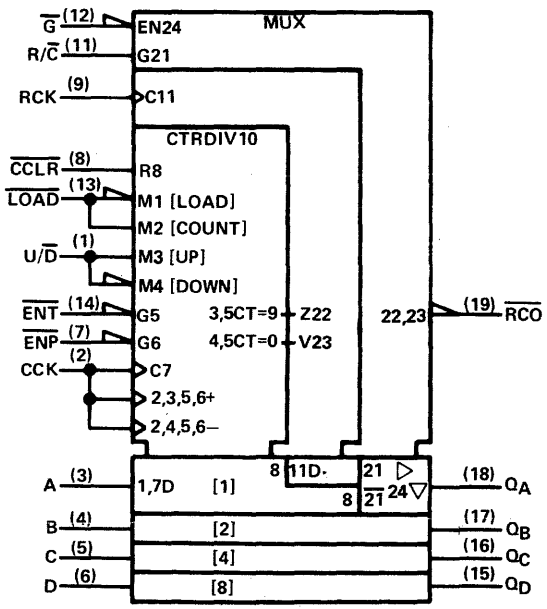

logic symbol, 'LS697†

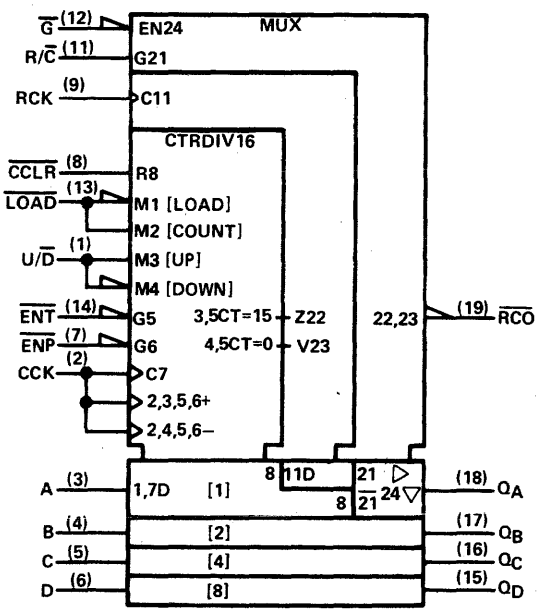

† Pin numbers shown on logic symbols are for J and N packages only.
nc — no internal connection.

Copyright © 1983 by Texas Instruments Incorporated.

696, 697, 698, 699 continued

logic symbol, 'LS698†

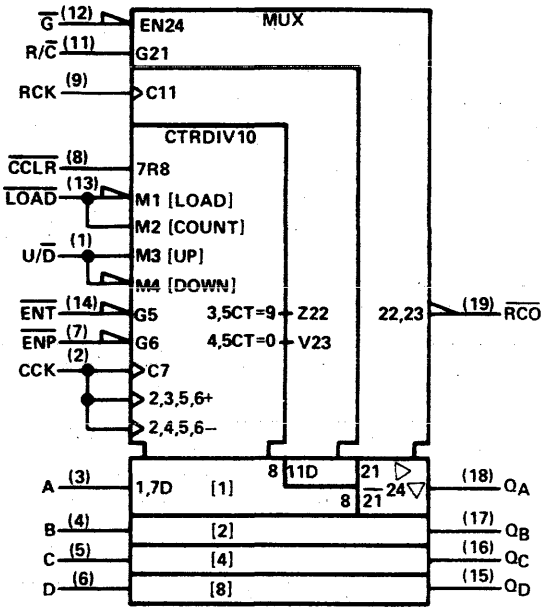

logic symbol, 'LS699†

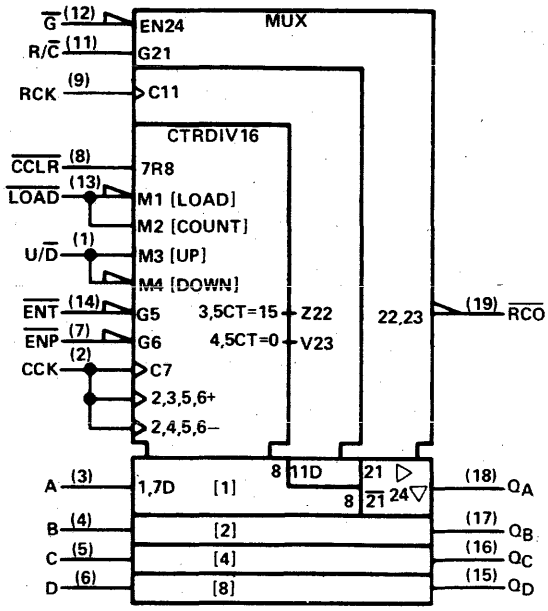

pin assignments

J, N PACKAGES			
1	U/D	11	R/C
2	CCK	12	G
3	A	13	LOAD
4	B	14	ENT
5	C	15	Q_D
6	D	16	Q_C
7	ENP	17	Q_B
8	CCLR	18	Q_A
9	RCK	19	RCO
10	GND	20	V_{CC}

FH, FN PACKAGES			
1	U/D	11	R/C
2	CCK	12	G
3	A	13	LOAD
4	B	14	ENT
5	C	15	Q_D
6	D	16	Q_C
7	ENP	17	Q_B
8	CCLR	18	Q_A
9	RCK	19	RCO
10	GND	20	V_{CC}

756

OCTAL BUFFERS/LINE DRIVERS/LINE RECEIVERS (WITH OPEN-COLLECTOR OUTPUTS)

- Open collector version of 'AS240

SN54AS756 (J,FH) SN74AS756 (N,FN)

logic symbol†

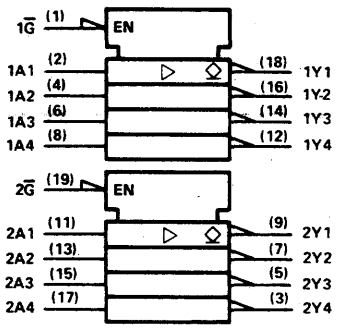

pin assignments

J, N PACKAGES				FH, FN PACKAGES			
1	1G	11	2A1	1	1G	11	2A1
2	1A1	12	1Y4	2	1A1	12	1Y4
3	2Y4	13	2A2	3	2Y4	13	2A2
4	1A2	14	1Y3	4	1A2	14	1Y3
5	2Y3	15	2A3	5	2Y3	15	2A3
6	1A3	16	1Y2	6	1A3	16	1Y2
7	2Y2	17	2A4	7	2Y2	17	2A4
8	1A4	18	1Y1	8	1A4	18	1Y1
9	2Y1	19	2G	9	2Y1	19	2G
10	GND	20	V_{CC}	10	GND	20	V_{CC}

757

OCTAL BUFFERS/LINE DRIVERS/LINE RECEIVERS (WITH OPEN-COLLECTOR OUTPUTS)

- Open collector version of 'AS241

SN54AS757 (J,FH) SN74AS757 (N,FN)

logic symbol†

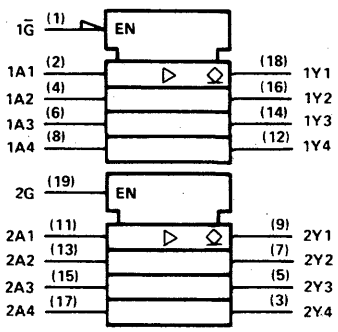

pin assignments

J, N PACKAGES				FH, FN PACKAGES			
1	1G	11	2A1	1	1G	11	2A1
2	1A1	12	1Y4	2	1A1	12	1Y4
3	2Y4	13	2A2	3	2Y4	13	2A2
4	1A2	14	1Y3	4	1A2	14	1Y3
5	2Y3	15	2A3	5	2Y3	15	2A3
6	1A3	16	1Y2	6	1A3	16	1Y2
7	2Y2	17	2A4	7	2Y2	17	2A4
8	1A4	18	1Y1	8	1A4	18	1Y1
9	2Y1	19	2G	9	2Y1	19	2G
10	GND	20	V_{CC}	10	GND	20	V_{CC}

† Pin numbers shown on logic symbols are for J and N packages only.
nc — no internal connection.

See ALS/AS availability at front of this Product Guide.

Copyright © 1983 by Texas Instruments Incorporated.

TEXAS INSTRUMENTS
POST OFFICE BOX 225012 • DALLAS, TEXAS 75265

758

QUADRUPLE BUS TRANSCEIVERS (WITH OPEN-COLLECTOR OUTPUTS)

- Open-collector version of 'AS242

SN54AS758 (J,FH) SN74AS758 (N,FN)

logic symbol †

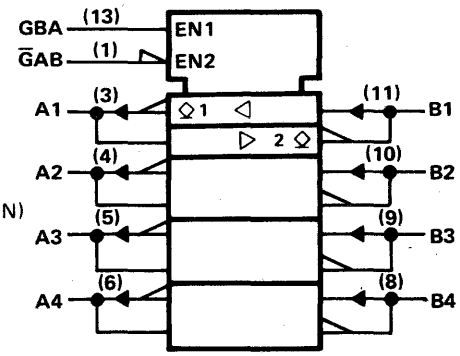

pin assignments

J,N PACKAGES			
1	ḠAB	8	B4
2	nc	9	B3
3	A1	10	B2
4	A2	11	B1
5	A3	12	nc
6	A4	13	GBA
7	GND	14	V_{CC}

FH,FN PACKAGES			
1	nc	11	nc
2	ḠAB	12	B4
3	nc	13	B3
4	A1	14	B2
5	nc	15	nc
6	A2	16	B1
7	nc	17	nc
8	A3	18	nc
9	A4	19	GBA
10	GND	20	V_{CC}

759

QUADRUPLE BUS TRANSCEIVERS (WITH OPEN-COLLECTOR OUTPUTS)

- Open-collector version of 'AS243

SN54AS759 (J,FH) SN74AS759 (N,FN)

logic symbol †

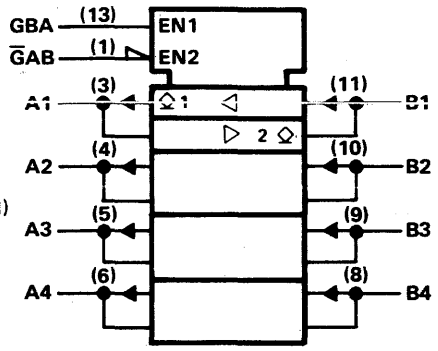

pin assignments

J,N PACKAGES			
1	ḠAB	8	B4
2	nc	9	B3
3	A1	10	B2
4	A2	11	B1
5	A3	12	nc
6	A4	13	GBA
7	GND	14	V_{CC}

FH,FN PACKAGES			
1	nc	11	nc
2	ḠAB	12	B4
3	nc	13	B3
4	A1	14	B2
5	nc	15	nc
6	A2	16	B1
7	nc	17	nc
8	A3	18	nc
9	A4	19	GBA
10	GND	20	V_{CC}

760

OCTAL BUFFERS/LINE DRIVERS/LINE RECEIVERS (WITH OPEN-COLLECTOR OUTPUTS)

- Open-collector version of 'AS244

SN54AS760 (J,FH) SN74AS760 (N,FN)

logic symbol †

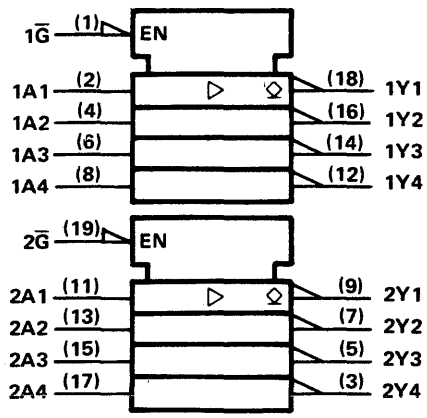

pin assignments

J,N PACKAGES			
1	1Ḡ	11	2A1
2	1A1	12	1Y4
3	2Y4	13	2A2
4	1A2	14	1Y3
5	2Y3	15	2A3
6	1A3	16	1Y2
7	2Y2	17	2A4
8	1A4	18	1Y1
9	2Y1	19	2Ḡ
10	GND	20	V_{CC}

FH,FN PACKAGES			
1	1Ḡ	11	2A1
2	1A1	12	1Y4
3	2Y4	13	2A2
4	1A2	14	1Y3
5	2Y3	15	2A3
6	1A3	16	1Y2
7	2Y2	17	2A4
8	1A4	18	1Y1
9	2Y1	19	2Ḡ
10	GND	20	V_{CC}

† Pin numbers shown on logic symbols are for J and N packages only.
nc — no internal connection.

See ALS/AS availability at front of this Product Guide.

Copyright © 1983 by Texas Instruments Incorporated.

TEXAS INSTRUMENTS
POST OFFICE BOX 225012 • DALLAS, TEXAS 75265

© IC MASTER 1984

762, 763

OCTAL BUFFERS AND LINE DRIVERS (OPEN-COLLECTOR OUTPUTS)

- 'AS762 has true and complementary outputs
- 'AS763 has complementary G and $\overline{G}$ inputs
- 'AS762 is open-collector version of 'AS230
- 'AS763 is open-collector version of 'AS231

SN54AS762 (J,FH) SN74AS762 (N,FN)
SN54AS763 (J,FH) SN74AS763 (N,FN)

logic symbol 'AS762†

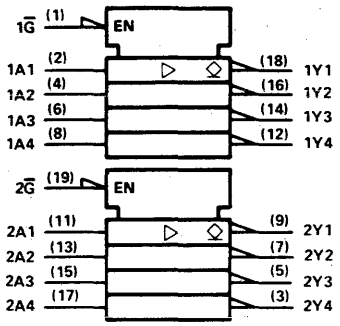

pin assignments

J,N PACKAGES				FH,FN PACKAGES			
1	1$\overline{G}$	11	2A1	1	1$\overline{G}$	11	2A1
2	1A1	12	1Y4	2	1A1	12	1Y4
3	2Y4	13	2A2	3	2Y4	13	2A2
4	1A2	14	1Y3	4	1A2	14	1Y3
5	2Y3	15	2A3	5	2Y3	15	2A3
6	1A3	16	1Y2	6	1A3	16	1Y2
7	2Y2	17	2A4	7	2Y2	17	2A4
8	1A4	18	1Y1	8	1A4	18	1Y1
9	2Y1	19	2$\overline{G}$*	9	2Y1	19	2$\overline{G}$*
10	GND	20	V_{CC}	10	GND	20	V_{CC}

* 2G on 'AS763

logic symbol 'AS763

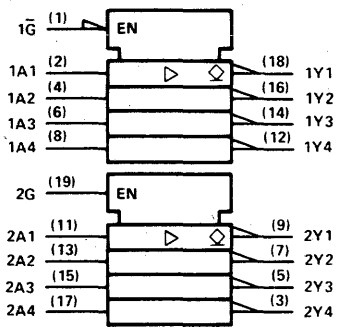

800

TRIPLE 4-INPUT AND/NAND DRIVERS

typical performance

TYPE	LOW-LEVEL OUTPUT CURRENT	HIGH-LEVEL OUTPUT CURRENT	POWER/GATE
SN54AS800	40 mA	–40 mA	25 mW
SN74AS800	48 mA	–48 mA	25 mW

SN54AS800 (J,FH) SN74AS800 (N,FN)

logic symbol†

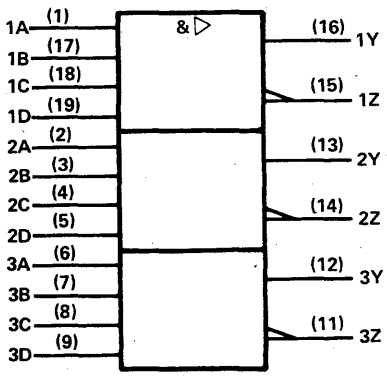

positive logic: $Y = ABCD$
$Z = \overline{ABCD}$

pin assignments

J, N PACKAGES			
1	1A	11	3Z
2	2A	12	3Y
3	2B	13	2Y
4	2C	14	2Z
5	2D	15	1Z
6	3A	16	1Y
7	3B	17	1B
8	3C	18	1C
9	3D	19	1D
10	GND	20	V_{CC}

FH, FN PACKAGES			
1	1A	11	3Z
2	2A	12	3Y
3	2B	13	2Y
4	2C	14	2Z
5	2D	15	1Z
6	3A	16	1Y
7	3B	17	1B
8	3C	18	1C
9	3D	19	1D
10	GND	20	V_{CC}

See ALS/AS availability at front of this Product Guide.

Copyright © 1983 by Texas Instruments Incorporated.

802

TRIPLE 4-INPUT OR/NOR LINE DRIVERS

typical performance

TYPE	LOW-LEVEL OUTPUT CURRENT	HIGH-LEVEL OUTPUT CURRENT	POWER/GATE
SN54AS802	40 mA	–40 mA	25 mW
SN74AS802	48 mA	–48 mA	25 mW

SN54AS802 (J,FH) SN74AS802 (N,FN)

logic symbol†

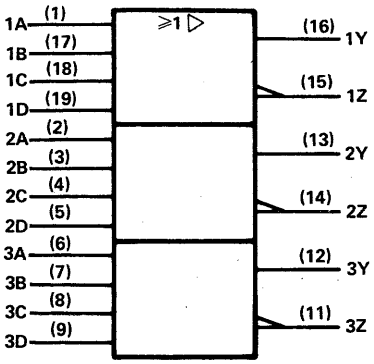

positive logic: $Y = A+B+C+D$

$Z = \overline{A+B+C+D}$

pin assignments

J, N PACKAGES			
1	1A	11	3Z
2	2A	12	3Y
3	2B	13	2Y
4	2C	14	2Z
5	2D	15	1Z
6	3A	16	1Y
7	3B	17	1B
8	3C	18	1C
9	3D	19	1D
10	GND	20	V_{CC}

FH, FN PACKAGES			
1	1A	11	3Z
2	2A	12	3Y
3	2B	13	2Y
4	2C	14	2Z
5	2D	15	1Z
6	3A	16	1Y
7	3B	17	1B
8	3C	18	1C
9	3D	19	1D
10	GND	20	V_{CC}

804

HEX 2-INPUT NAND DRIVERS

typical performance

TYPE	LOW-LEVEL OUTPUT CURRENT	HIGH-LEVEL OUTPUT CURRENT	DELAY	POWER/GATE
SN54ALS804	12 mA	–12 mA	3 ns	3.4 mW
SN74ALS804	24 mA	–15 mA	3 ns	3.4 mW
SN54AS804A	40 mA	–40 mA	2.7 ns	9 mW
SN74AS804A	48 mA	–48 mA	2.7 ns	9 mW

SN54ALS804 (J,FH) SN74ALS804 (N,FN)
SN54AS804A (J,FH) SN74AS804A (N,FN)

logic symbol†

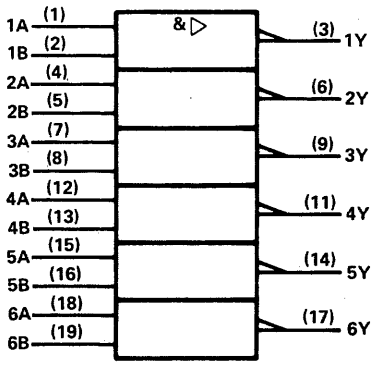

positive logic: $Y = \overline{AB}$

pin assignments

J, N PACKAGES			
1	1A	11	4Y
2	1B	12	4A
3	1Y	13	4B
4	2A	14	5Y
5	2B	15	5A
6	2Y	16	5B
7	3A	17	6Y
8	3B	18	6A
9	3Y	19	6B
10	GND	20	V_{CC}

FH, FN PACKAGES			
1	1A	11	4Y
2	1B	12	4A
3	1Y	13	4B
4	2A	14	5Y
5	2B	15	5A
6	2Y	16	5B
7	3A	17	6Y
8	3B	18	6A
9	3Y	19	6B
10	GND	20	V_{CC}

† Pin numbers shown on logic symbols are for J and N packages only.
nc – no internal connection.

Copyright © 1983 by Texas Instruments Incorporated.

805

HEX 2-INPUT NOR DRIVERS

typical performance

TYPE	LOW-LEVEL OUTPUT CURRENT	HIGH-LEVEL OUTPUT CURRENT	DELAY	POWER/ GATE
SN54ALS805	12 mA	–12 mA	3.5 ns	4.2 mw
SN74ALS805	24 mA	–15 mA	3.5 ns	4.2 mW
SN54AS805A	40 mA	–40 mA	2.7 ns	12 mW
SN74AS805A	48 mA	–48 mA	2.7 ns	12 mW

SN54ALS805 (J,FH) SN74ALS805 (N,FN)
SN54AS805A (J,FH) SN74AS805A (N,FN)

logic symbol†

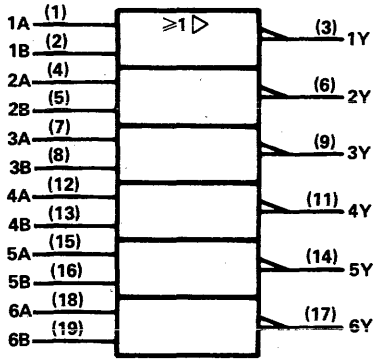

positive logic: $Y = \overline{A+B}$

pin assignments

J, N PACKAGES			
1	1A	11	4Y
2	1B	12	4A
3	1Y	13	4B
4	2A	14	5Y
5	2B	15	5A
6	2Y	16	5B
7	3A	17	6Y
8	3B	18	6A
9	3Y	19	6B
10	GND	20	V_{CC}

FH, FN PACKAGES			
1	1A	11	4Y
2	1B	12	4A
3	1Y	13	4B
4	2A	14	5Y
5	2B	15	5A
6	2Y	16	5B
7	3A	17	6Y
8	3B	18	6A
9	3Y	19	6B
10	GND	20	V_{CC}

808

HEX 2-INPUT AND DRIVERS

typical performance

TYPE	LOW-LEVEL OUTPUT CURRENT	HIGH-LEVEL OUTPUT CURRENT	DELAY	POWER/ GATE
SN54ALS808	12 mA	–12 mA	4.3 ns	4.5 mW
SN74ALS808	24 mA	–15 mA	4.3 ns	4.5 mW
SN54AS808A	40 mA	–40 mA	3.2 ns	13 mW
SN74AS808A	48 mA	–48 mA	3.2 ns	13 mW

SN54ALS808 (J,FH) SN74ALS808 (N,FN)
SN54AS808A (J,FH) SN74AS808A (N,FN)

logic symbol†

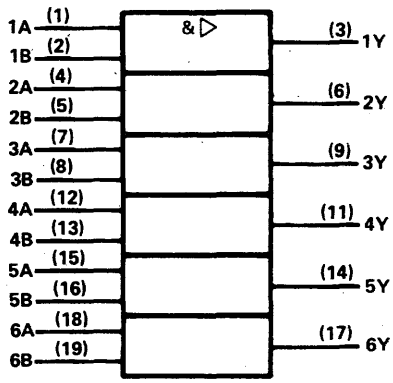

positive logic: $Y = AB$

pin assignments

J, N PACKAGES			
1	1A	11	4Y
2	1B	12	4A
3	1Y	13	4B
4	2A	14	5Y
5	2B	15	5A
6	2Y	16	5B
7	3A	17	6Y
8	3B	18	6A
9	3Y	19	6B
10	GND	20	V_{CC}

FH, FN PACKAGES			
1	1A	11	4Y
2	1B	12	4A
3	1Y	13	4B
4	2A	14	5Y
5	2B	15	5A
6	2Y	16	5B
7	3A	17	6Y
8	3B	18	6A
9	3Y	19	6B
10	GND	20	V_{CC}

† Pin numbers shown on logic symbols are for J and N packages only.
nc — no internal connection.

See ALS/AS availability at front of this Product Guide.

Copyright © 1983 by Texas Instruments Incorporated.

TEXAS INSTRUMENTS
POST OFFICE BOX 225012 • DALLAS, TEXAS 75265

821

10-BIT PARALLEL REGISTERS

- High-speed parallel registers with positive edge-triggered D-type flip-flops
- Non-inverting outputs

SN54AS821 (JT, FH) SN74AS821 (NT, FN)

logic symbol†

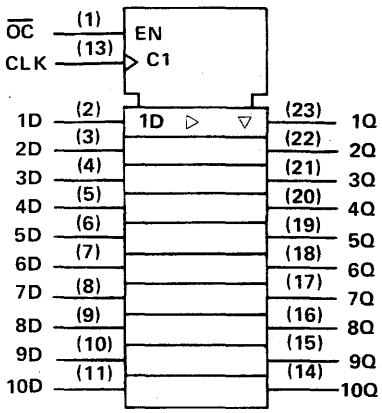

pin assignments

JT, NT PACKAGES			
1	$\overline{OC}$	13	CLK
2	1D	14	10Q
3	2D	15	9Q
4	3D	16	8Q
5	4D	17	7Q
6	5D	18	6Q
7	6D	19	5Q
8	7D	20	4Q
9	8D	21	3Q
10	9D	22	2Q
11	10D	23	1Q
12	GND	24	V_{CC}

FH, FN PACKAGES			
1	nc	15	nc
2	$\overline{OC}$	16	CLK
3	1D	17	10Q
4	2D	18	9Q
5	3D	19	8Q
6	4D	20	7Q
7	5D	21	6Q
8	nc	22	nc
9	6D	23	5Q
10	7D	24	4Q
11	8D	25	3Q
12	9D	26	2Q
13	10D	27	1Q
14	GND	28	V_{CC}

822

10-BIT PARALLEL REGISTERS

- High-speed parallel registers with positive edge-triggered D-type flip-flops
- Inverting outputs

SN54AS822 (JT, FH) SN74AS822 (NT, FN)

logic symbol†

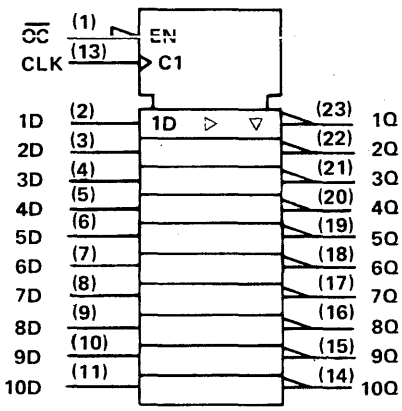

pin assignments

JT, NT PACKAGES			
1	$\overline{OC}$	13	CLK
2	1D	14	10Q
3	2D	15	9Q
4	3D	16	8Q
5	4D	17	7Q
6	5D	18	6Q
7	6D	19	5Q
8	7D	20	4Q
9	8D	21	3Q
10	9D	22	2Q
11	10D	23	1Q
12	GND	24	V_{CC}

FH, FN PACKAGES			
1	nc	15	nc
2	$\overline{OC}$	16	CLK
3	1D	17	10Q
4	2D	18	9Q
5	3D	19	8Q
6	4D	20	7Q
7	5D	21	6Q
8	nc	22	nc
9	6D	23	5Q
10	7D	24	4Q
11	8D	25	3Q
12	9D	26	2Q
13	10D	27	1Q
14	GND	28	V_{CC}

823

9-BIT PARALLEL REGISTERS

- High-speed parallel registers with positive edge-triggered D-type flip-flops
- Non-inverting outputs

SN54AS823 (JT, FH) SN74AS823 (NT, FN)

logic symbol†

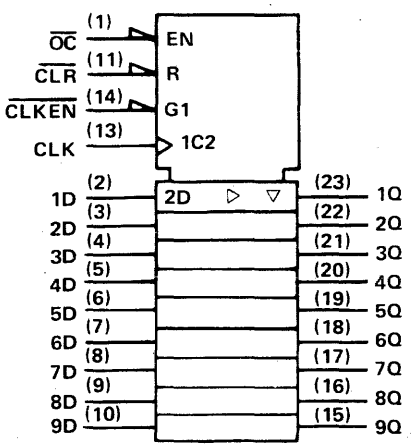

pin assignments

JT, NT PACKAGES			
1	$\overline{OC}$	13	CLK
2	1D	14	$\overline{CLKEN}$
3	2D	15	9Q
4	3D	16	8Q
5	4D	17	7Q
6	5D	18	6Q
7	6D	19	5Q
8	7D	20	4Q
9	8D	21	3Q
10	9D	22	2Q
11	$\overline{CLR}$	23	1Q
12	GND	24	V_{CC}

FH, FN PACKAGES			
1	nc	15	nc
2	$\overline{OC}$	16	CLK
3	1D	17	$\overline{CLKEN}$
4	2D	18	9Q
5	3D	19	8Q
6	4D	20	7Q
7	5D	21	6Q
8	nc	22	nc
9	6D	23	5Q
10	7D	24	4Q
11	8D	25	3Q
12	9D	26	2Q
13	$\overline{CLR}$	27	1Q
14	GND	28	V_{CC}

† Pin numbers shown on logic symbols are for JT and NT packages only.
nc — no internal connection.

See ALS/AS availability at front of this Product Guide.

Copyright © 1983 by Texas Instruments Incorporated.

TEXAS INSTRUMENTS
POST OFFICE BOX 225012 • DALLAS, TEXAS 75265

© IC MASTER 1984

824

9-BIT PARALLEL REGISTERS

- High-speed parallel registers with positive edge-triggered D-type flip-flops
- Inverting outputs

SN54AS824 (JT,FH)
SN74AS824 (NT,FN)

logic symbol†

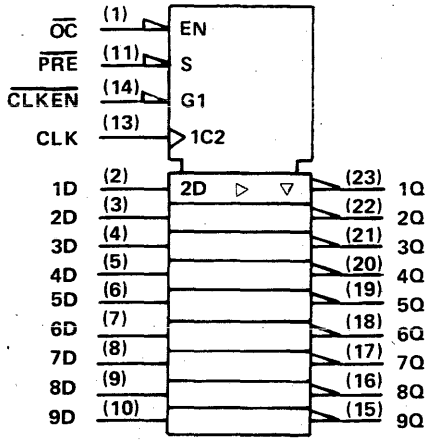

pin assignments

JT, NT PACKAGES			
1	$\overline{OC}$	13	CLK
2	1D	14	$\overline{CLKEN}$
3	2D	15	9Q
4	3D	16	8Q
5	4D	17	7Q
6	5D	18	6Q
7	6D	19	5Q
8	7D	20	4Q
9	8D	21	3Q
10	9D	22	2Q
11	$\overline{PRE}$	23	1Q
12	GND	24	V_{CC}

FH, FN PACKAGES			
1	nc	15	nc
2	$\overline{OC}$	16	CLK
3	1D	17	$\overline{CLKEN}$
4	2D	18	9Q
5	3D	19	8Q
6	4D	20	7Q
7	5D	21	6Q
8	nc	22	nc
9	6D	23	5Q
10	7D	24	4Q
11	8D	25	3Q
12	9D	26	2Q
13	$\overline{PRE}$	27	1Q
14	GND	28	V_{CC}

825

8-BIT PARALLEL REGISTERS

- High-speed parallel registers with positive edge-triggered D-type flip-flops
- Non-inverting outputs

SN54AS825 (JT,FH)
SN74AS825 (NT,FN)

logic symbol†

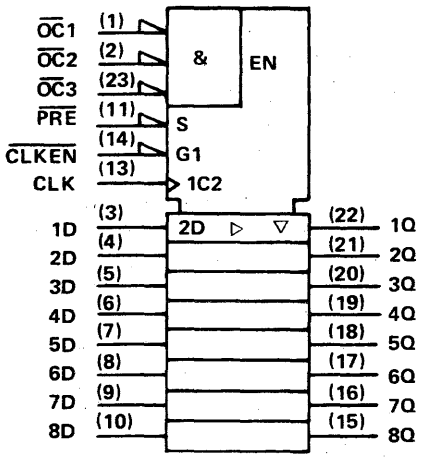

pin assignments

JT, NT PACKAGES			
1	$\overline{OC1}$	13	CLK
2	$\overline{OC2}$	14	$\overline{CLKEN}$
3	1D	15	8Q
4	2D	16	7Q
5	3D	17	6Q
6	4D	18	5Q
7	5D	19	4Q
8	6D	20	3Q
9	7D	21	2Q
10	8D	22	1Q
11	$\overline{PRE}$	23	$\overline{OC3}$
12	GND	24	V_{CC}

FH, FN PACKAGES			
1	nc	15	nc
2	$\overline{OC1}$	16	CLK
3	$\overline{OC2}$	17	$\overline{CLKEN}$
4	1D	18	8Q
5	2D	19	7Q
6	3D	20	6Q
7	4D	21	5Q
8	nc	22	nc
9	5D	23	4Q
10	6D	24	3Q
11	7D	25	2Q
12	8D	26	1Q
13	$\overline{PRE}$	27	$\overline{OC3}$
14	GND	28	V_{CC}

826

8-BIT PARALLEL REGISTERS

- High-speed parallel registers with positive edge-triggered D-type flip-flops
- Inverting outputs

SN54AS825 (JT,FH)
SN74AS825 (NT,FN)

logic symbol†

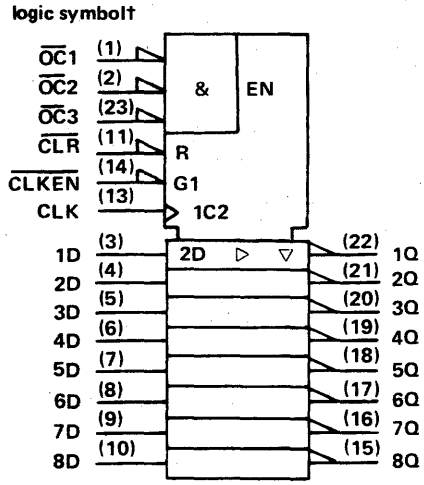

pin assignments

JT, NT PACKAGES			
1	$\overline{OC1}$	13	CLK
2	$\overline{OC2}$	14	$\overline{CLKEN}$
3	1D	15	8Q
4	2D	16	7Q
5	3D	17	6Q
6	4D	18	5Q
7	5D	19	4Q
8	6D	20	3Q
9	7D	21	2Q
10	8D	22	1Q
11	$\overline{CLR}$	23	$\overline{OC3}$
12	GND	24	V_{CC}

FH, FN PACKAGES			
1	nc	15	nc
2	$\overline{OC1}$	16	CLK
3	$\overline{OC2}$	17	$\overline{CLKEN}$
4	1D	18	8Q
5	2D	19	7Q
6	3D	20	6Q
7	4D	21	5Q
8	nc	22	nc
9	5D	23	4Q
10	6D	24	3Q
11	7D	25	2Q
12	8D	26	1Q
13	$\overline{CLR}$	27	$\overline{OC3}$
14	GND	28	V_{CC}

† Pin numbers shown on logic symbols are for JT and NT packages only.
nc — no internal connection.

See ALS/AS availability at front of this Product Guide.

Copyright © 1983 by Texas Instruments Incorporated.

TEXAS INSTRUMENTS
POST OFFICE BOX 225012 • DALLAS, TEXAS 75265

832

HEX 2-INPUT OR DRIVERS

typical performance

TYPE	LOW-LEVEL OUTPUT CURRENT	HIGH-LEVEL OUTPUT CURRENT	DELAY	POWER/GATE
SN54ALS832	12 mA	– 12 mA	4 ns	5.3 mW
SN74ALS832	24 mA	– 15 mA	4 ns	5.3 mW
SN54AS832A	40 mA	– 40 mA	3 ns	17 mW
SN74AS832A	48 mA	– 48 mA	3 ns	17 mW

logic symbol†

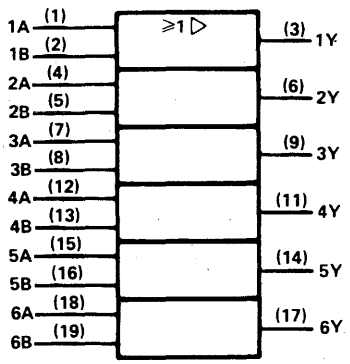

positive logic: Y = A+B

pin assignments

FH,FN PACKAGES			
1	1A	11	4Y
2	1B	12	4A
3	1Y	13	4B
4	2A	14	5Y
5	2B	15	5A
6	2Y	16	5B
7	3A	17	6Y
8	3B	18	6A
9	3Y	19	6B
10	GND	20	V_{CC}

J,N PACKAGES			
1	1A	11	4Y
2	1B	12	4A
3	1Y	13	4B
4	2A	14	5Y
5	2B	15	5A
6	2Y	16	5B
7	3A	17	6Y
8	3B	18	6A
9	3Y	19	6B
10	GND	20	V_{CC}

841

10-BIT PARALLEL LATCHES

- High-speed parallel latches — noninverting transparent
-

SN54AS841 (JT, FH) SN74AS841 (NT, FN)

logic symbol†

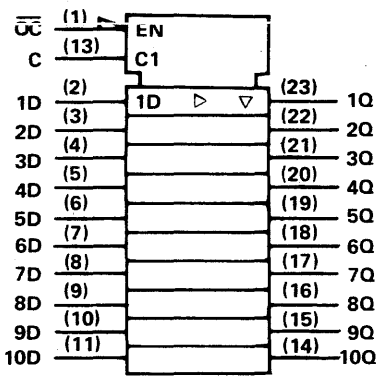

pin assignments

JT, NT PACKAGES			
1	$\overline{OC}$	13	C
2	1D	14	10Q
3	2D	15	9Q
4	3D	16	8Q
5	4D	17	7Q
6	5D	18	6Q
7	6D	19	5Q
8	7D	20	4Q
9	8D	21	3Q
10	9D	22	2Q
11	10D	23	1Q
12	GND	24	V_{CC}

FH, FN PACKAGES			
1	nc	15	nc
2	$\overline{OC}$	16	C
3	1D	17	10Q
4	2D	18	9Q
5	3D	19	8Q
6	4D	20	7Q
7	5D	21	6Q
8	nc	22	nc
9	6D	23	5Q
10	7D	24	4Q
11	8D	25	3Q
12	9D	26	2Q
13	10D	27	1Q
14	GND	28	V_{CC}

842

10-BIT PARALLEL LATCHES

- High-speed parallel latches — inverting transparent

SN54AS842 (JT, FH) SN74AS842 (NT, FN)

logic symbol†

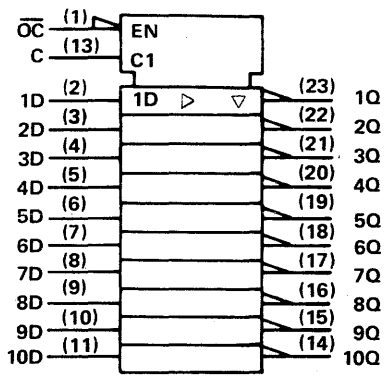

pin assignments

JT, NT PACKAGES			
1	$\overline{OC}$	13	C
2	1D	14	10Q
3	2D	15	9Q
4	3D	16	8Q
5	4D	17	7Q
6	5D	18	6Q
7	6D	19	5Q
8	7D	20	4Q
9	8D	21	3Q
10	9D	22	2Q
11	10D	23	1Q
12	GND	24	V_{CC}

FH, FN PACKAGES			
1	nc	15	nc
2	$\overline{OC}$	16	C
3	1D	17	10Q
4	2D	18	9Q
5	3D	19	8Q
6	4D	20	7Q
7	5D	21	6Q
8	nc	22	nc
9	6D	23	5Q
10	7D	24	4Q
11	8D	25	3Q
12	9D	26	2Q
13	10D	27	1Q
14	GND	28	V_{CC}

† Pin numbers shown on logic symbols are for J, JT, N, NT packages only.
nc — no internal connection.

See ALS/AS availability at front of this Product Guide.

Copyright © 1983 by Texas Instruments Incorporated.

TEXAS INSTRUMENTS
POST OFFICE BOX 225012 • DALLAS, TEXAS 75265

© IC MASTER 1984

843

9-BIT PARALLEL LATCHES

- High-speed parallel latches — noninverting transparent

SN54AS843 (JT, FH) SN74AS943 (NT, FN)

logic symbol†

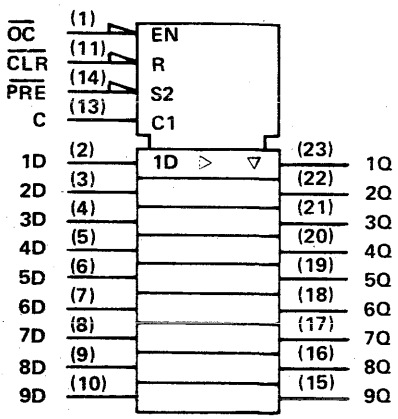

pin assignments

JT, NT PACKAGES			
1	OC	13	C
2	1D	14	PRE
3	2D	15	9Q
4	3D	16	8Q
5	4D	17	7Q
6	5D	18	6Q
7	6D	19	5Q
8	7D	20	4Q
9	8D	21	3Q
10	9D	22	2Q
11	CLR	23	1Q
12	GND	24	V_{CC}

FH, FN PACKAGES			
1	nc	15	nc
2	OC	16	C
3	1D	17	PRE
4	2D	18	9Q
5	3D	19	8Q
6	4D	20	7Q
7	5D	21	6Q
8	nc	22	nc
9	6D	23	5Q
10	7D	24	4Q
11	8D	25	3Q
12	9D	26	2Q
13	CLR	27	1Q
14	GND	28	V_{CC}

844

9-BIT PARALLEL LATCHES

- High-speed parallel latches — inverting transparent

SN54AS844 (JT, FH) SN74AS844 (NT, FN)

logic symbol†

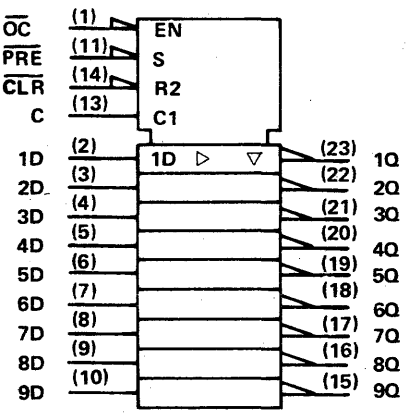

pin assignments

JT, NT PACKAGES			
1	OC	13	C
2	1D	14	CLR
3	2D	15	9Q
4	3D	16	8Q
5	4D	17	7Q
6	5D	18	6Q
7	6D	19	5Q
8	7D	20	4Q
9	8D	21	3Q
10	9D	22	2Q
11	PRE	23	1Q
12	GND	24	V_{CC}

FH, FN PACKAGES			
1	nc	15	nc
2	OC	16	C
3	1D	17	CLR
4	2D	18	9Q
5	3D	19	8Q
6	4D	20	7Q
7	5D	21	6Q
8	nc	22	nc
9	6D	23	5Q
10	7D	24	4Q
11	8D	25	3Q
12	9D	26	2Q
13	PRE	27	1Q
14	GND	28	V_{CC}

845

8-BIT PARALLEL LATCHES

- High-speed parallel latches — noninverting transparent

SN54AS845 (JT, FH) SN74AS845 (NT, FN)

logic symbol†

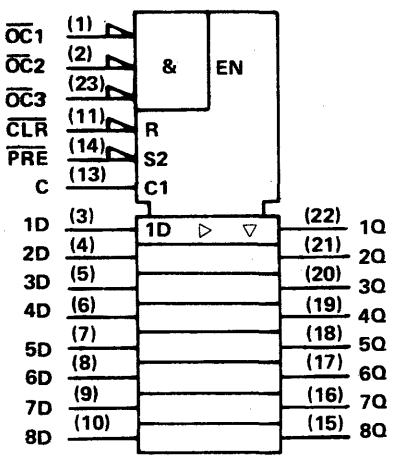

pin assignments

JT, NT PACKAGES			
1	OC1	13	C
2	OC2	14	PRE
3	1D	15	8Q
4	2D	16	7Q
5	3D	17	6Q
6	4D	18	5Q
7	5D	19	4Q
8	6D	20	3Q
9	7D	21	2Q
10	8D	22	1Q
11	CLR	23	OC3
12	GND	24	V_{CC}

FH, FN PACKAGES			
1	nc	15	nc
2	OC1	16	C
3	OC2	17	PRE
4	1D	18	8Q
5	2D	19	7Q
6	3D	20	6Q
7	4D	21	5Q
8	nc	22	nc
9	5D	23	4Q
10	6D	24	3Q
11	7D	25	2Q
12	8D	26	1Q
13	CLR	27	OC3
14	GND	28	V_{CC}

† Pin numbers shown on logic symbols are for JT and NT packages only.
nc — no internal connection.

See ALS/AS availability at front of this Product Guide.

Copyright © 1983 by Texas Instruments Incorporated.

TEXAS INSTRUMENTS
POST OFFICE BOX 225012 • DALLAS, TEXAS 75265

846

8-BIT PARALLEL LATCHES

- High-speed parallel latches — inverting transparent

SN54AS846 (JT, FH) SN74AS846 (NT, FN)

logic symbol†

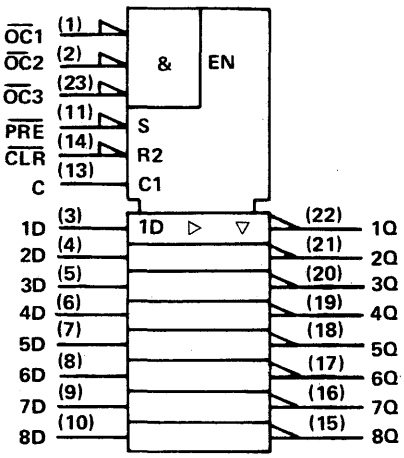

pin assignments

JT, NT PACKAGES			
1	$\overline{OC1}$	13	C
2	$\overline{OC2}$	14	$\overline{CLR}$
3	1D	15	8Q
4	2D	16	7Q
5	3D	17	6Q
6	4D	18	5Q
7	5D	19	4Q
8	6D	20	3Q
9	7D	21	2Q
10	8D	22	1Q
11	$\overline{PRE}$	23	$\overline{OC3}$
12	GND	24	V_{CC}

FH, FN PACKAGES			
1	nc	15	nc
2	$\overline{OC1}$	16	C
3	$\overline{OC2}$	17	$\overline{CLR}$
4	1D	18	8Q
5	2D	19	7Q
6	3D	20	6Q
7	4D	21	5Q
8	nc	22	nc
9	5D	23	4Q
10	6D	24	3Q
11	7D	25	2Q
12	8D	26	1Q
13	$\overline{PRE}$	27	$\overline{OC3}$
14	GND	28	V_{CC}

850, 851

1 OF 16 DATA SELECTORS/MULTIPLEXERS

- Registered select lines (850)
- Latched select lines (851)
- 4 ns data to output
- 7 ns clock to output
- Three-state outputs controls for both outputs

SN54AS850 (JD, FH) SN74AS850 (N, FN)
SN54AS851 (JD, FH) SN74AS851 (N, FN)

pin assignments

JD, N PACKAGES			
1	E7	15	D
2	E6	16	C
3	E5	17	B
4	E4	18	A
5	E3	19	Y
6	E2	20	E15
7	E1	21	E14
8	E0	22	E13
9	$\overline{G}$Y/GY	23	E12
10	$\overline{G}$/G	24	E11
11	GW	25	E10
12	CK/GL	26	E9
13	$\overline{W}$	27	E8
14	GND	28	V_{CC}

FH, FN PACKAGES			
1	E7	15	D
2	E6	16	C
3	E5	17	B
4	E4	18	A
5	E3	19	Y
6	E2	20	E15
7	E1	21	E14
8	E0	22	E13
9	$\overline{G}$Y/GY	23	E12
10	$\overline{G}$/G	24	E11
11	GW	25	E10
12	CK/GL	26	E9
13	$\overline{W}$	27	E8
14	GND	28	V_{CC}

logic symbol† 'AS850

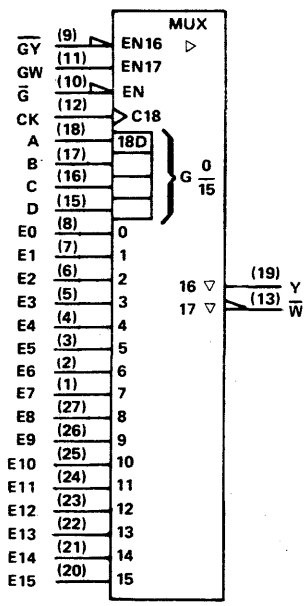

logic symbol† 'AS851

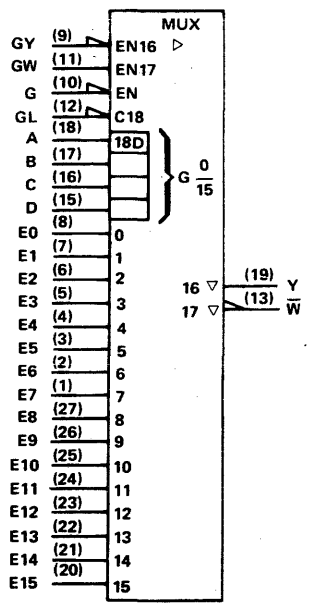

† Pin numbers shown on logic symbols are for JD, JT, N, and NT packages only.
nc — no internal connection.

See ALS/AS availability at front of this Product Guide.

Copyright © 1983 by Texas Instruments Incorporated.

852

8-BIT UNIVERSAL TRANSCEIVER/PORT CONTROLLERS

- 8 selectable transceivert/port functions
- 3-state buffer-type outputs drive bus lines directly
- 24-pin 300-mil package

SN54AS852 (JT,FH)
SN74AS852 (NT,FN)

logic symbol†

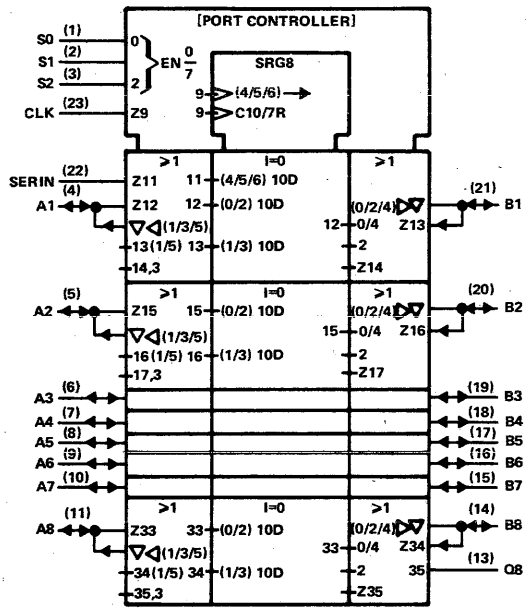

pin assignments

JT,NT PACKAGES			
1	S0	13	Q8
2	S1	14	B8
3	S2	15	B7
4	A1	16	B6
5	A2	17	B5
6	A3	18	B4
7	A4	19	B3
8	A5	20	B2
9	A6	21	B1
10	A7	22	SERIN
11	A8	23	CLK
12	GND	24	V_{CC}

FH,FN PACKAGES			
1	nc	15	nc
2	S0	16	Q8
3	S1	17	B8
4	S2	18	B7
5	A1	19	B6
6	A2	20	B5
7	A3	21	B4
8	nc	22	nc
9	A4	23	B3
10	A5	24	B2
11	A6	25	B1
12	A7	26	SERIN
13	A8	27	CLK
14	GND	28	V_{CC}

856

8-BIT UNIVERSAL TRANSCEIVER/PORT CONTROLLERS

- 8 selectable transceiver/port functions
- 3-state buffer-type outputs drive bus lines directly
- 24-pin 300-mil package

SN54AS856 (JT,FH)
SN74AS856 (NT,FN)

logic symbol†

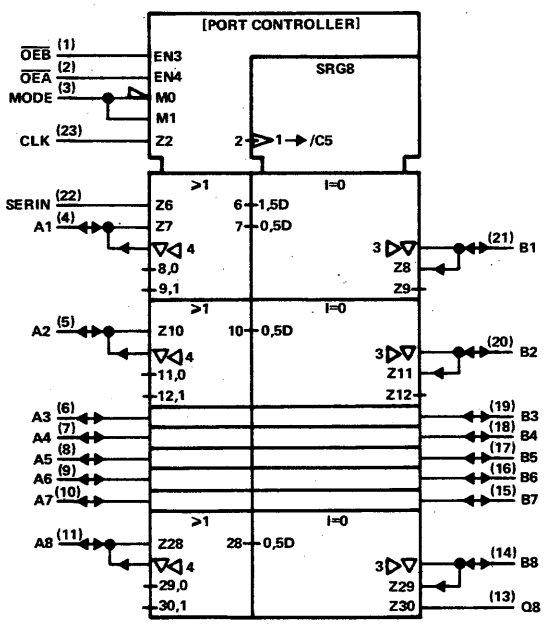

pin assignments

JT,NT PACKAGES			
1	$\overline{OEB}$	13	Q8
2	$\overline{OEA}$	14	B8
3	MODE	15	B7
4	A1	16	B6
5	A2	17	B5
6	A3	18	B4
7	A4	19	B3
8	A5	20	B2
9	A6	21	B1
10	A7	22	SERIN
11	A8	23	CLK
12	GND	24	V_{CC}

FH,FN PACKAGES			
1	nc	15	nc
2	$\overline{OEB}$	16	Q8
3	$\overline{OEA}$	17	B8
4	MODE	18	B7
5	A1	19	B6
6	A2	20	B5
7	A3	21	B4
8	nc	22	nc
9	A4	23	B3
10	A5	24	B2
11	A6	25	B1
12	A7	26	SERIN
13	A8	27	CLK
14	GND	28	V_{CC}

†Pin numbers shown on logic symbol are for JT and NT packages only.
nc—no internal connection.

Copyright © 1983 by Texas Instruments Incorporated.

TEXAS INSTRUMENTS
POST OFFICE BOX 225012 • DALLAS, TEXAS 75265

857

HEX 2-TO-1 UNIVERSAL MULTIPLEXER

- Three-state buffer-type outputs
- True or complementary data

SN54ALS857 (JT) SN74ALS857 (JT,NT)
SN54AS857 (JT,FH) SN74AS857 (NT,FN)

logic symbol†

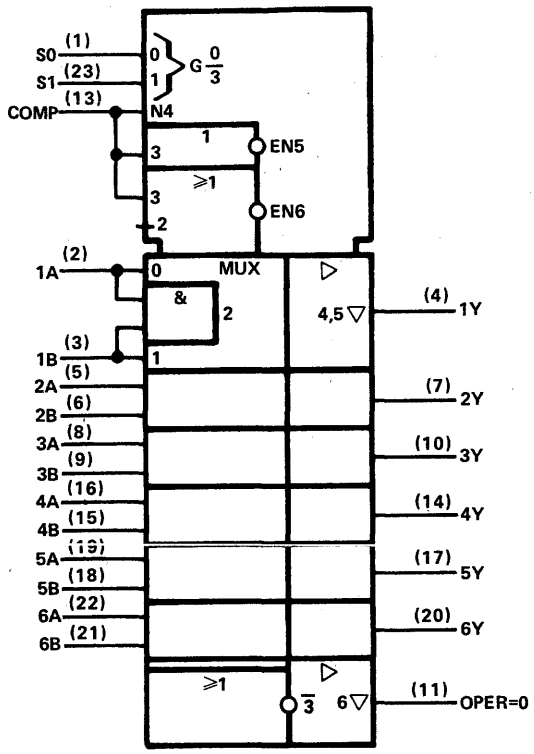

pin assignments

JT, NT PACKAGES			
1	S0	13	COMP
2	1A	14	4Y
3	1B	15	4B
4	1Y	16	4A
5	2A	17	5Y
6	2B	18	5B
7	2Y	19	5A
8	3A	20	6Y
9	3B	21	6B
10	3Y	22	6A
11	OPER=0	23	S1
12	GND	24	V_{CC}

FH, FN PACKAGES			
1	nc	15	nc
2	S0	16	COMP
3	1A	17	4Y
4	1B	18	4B
5	1Y	19	4A
6	2A	20	5Y
7	2B	21	5B
8	nc	22	nc
9	2Y	23	5A
10	3A	24	6Y
11	3B	25	6B
12	3Y	26	6A
13	OPER=0	27	S1
14	GND	28	V_{CC}

†Pin numbers shown on logic symbols are for J, JT, N, and NT packages only.
nc — no internal connection.

Copyright © 1983 by Texas Instruments Incorporated.

866

8-BIT MAGNITUDE COMPARATORS

- Fast compare to zero
- Arithmetic and logical comparison
- Open-collector output for P = Q

SN54AS866 (JD,FH) SN74AS866 (N,FN)

logic symbol†

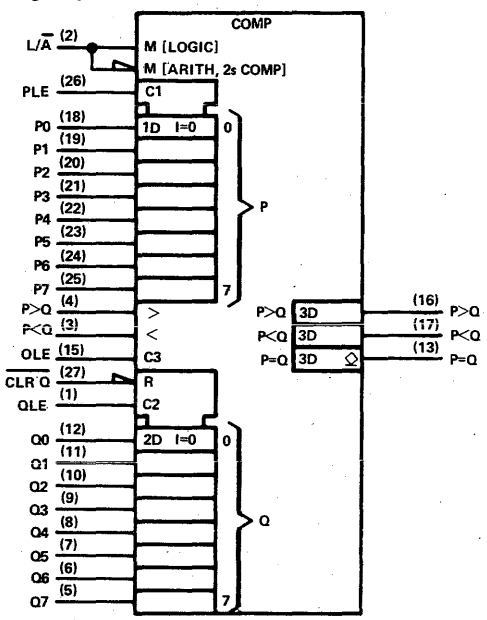

pin assignments

JD, N PACKAGES			
1	QLE	15	OLE
2	L/$\overline{A}$	16	P>Qout
3	P<Qin	17	P<Qout
4	P>Qin	18	P0
5	Q7	19	P1
6	Q6	20	P2
7	Q5	21	P3
8	Q4	22	P4
9	Q3	23	P5
10	Q2	24	P6
11	Q1	25	P7
12	Q0	26	PLE
13	P = Qout	27	$\overline{CLRQ}$
14	GND	28	V_{CC}

FH, FN PACKAGES			
1	QLE	15	OLE
2	L/$\overline{A}$	16	P>Qout
3	P<Qin	17	P<Qout
4	P>Qin	18	P0
5	Q7	19	P1
6	Q6	20	P2
7	Q5	21	P3
8	Q4	22	P4
9	Q3	23	P5
10	Q2	24	P6
11	Q1	25	P7
12	Q0	26	PLE
13	P = Qout	27	$\overline{CLRQ}$
14	GND	28	V_{CC}

867, 869

8-BIT SYNCHRONOUS BIDIRECTIONAL COUNTERS

- 'AS867 has asynchronous clear
- 'AS869 has synchronous clear
- Ripple carry output for N-bit cascading
- Fully programmable with synchronous counting and loading

FUNCTION TABLE

S1	S0	FUNCTION
L	L	Clear
L	H	Count Down
H	L	Load
H	H	Count Up

Supersedes table in *1981 Supplement to TTL Data Book*

SN54AS867 (JT,FH) SN74AS867 (NT,FN)
SN54AS869 (JT,FH) SN74AS869 (NT,FN)

logic symbol, 'AS867†

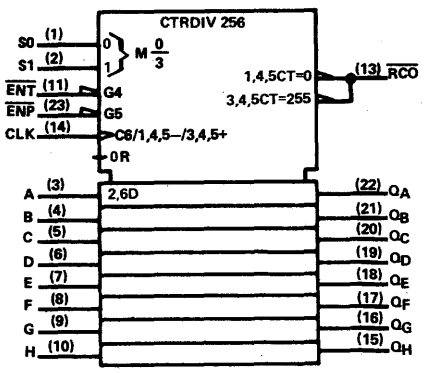

logic symbol, 'AS869†

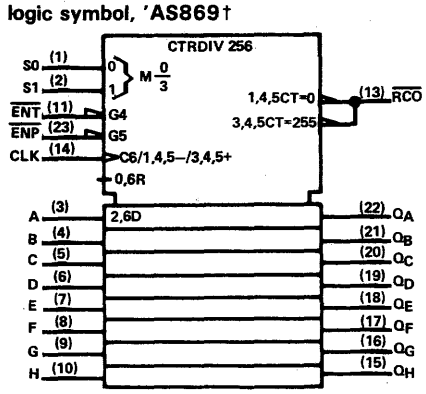

pin assignments

JT, NT PACKAGES			
1	S0	13	$\overline{RCO}$
2	S1	14	CLK
3	A	15	Q_H
4	B	16	Q_G
5	C	17	Q_F
6	D	18	Q_E
7	E	19	Q_D
8	F	20	Q_C
9	G	21	Q_B
10	H	22	Q_A
11	$\overline{ENT}$	23	$\overline{ENP}$
12	GND	24	V_{CC}

FH, FN PACKAGES			
1	nc	15	nc
2	S0	16	$\overline{RCO}$
3	S1	17	CLK
4	A	18	Q_H
5	B	19	Q_G
6	C	20	Q_F
7	D	21	Q_E
8	nc	22	nc
9	E	23	Q_D
10	F	24	Q_C
11	G	25	Q_B
12	H	26	Q_A
13	$\overline{ENT}$	27	$\overline{ENP}$
14	GND	28	V_{CC}

†Pin numbers shown on logic symbols are for JT and NT packages only.

Copyright © 1983 by Texas Instruments Incorporated.

TEXAS INSTRUMENTS
POST OFFICE BOX 225012 • DALLAS, TEXAS 75265

870

DUAL 16-BY-4 REGISTER FILES

- Each register file has individual write/enable controls and address lines
- Has two 4-bit data I/O ports
- 24-pin 300-mil package

SN54AS870 (JT,FH)
SN74AS870 (NT,FN)

logic symbol†

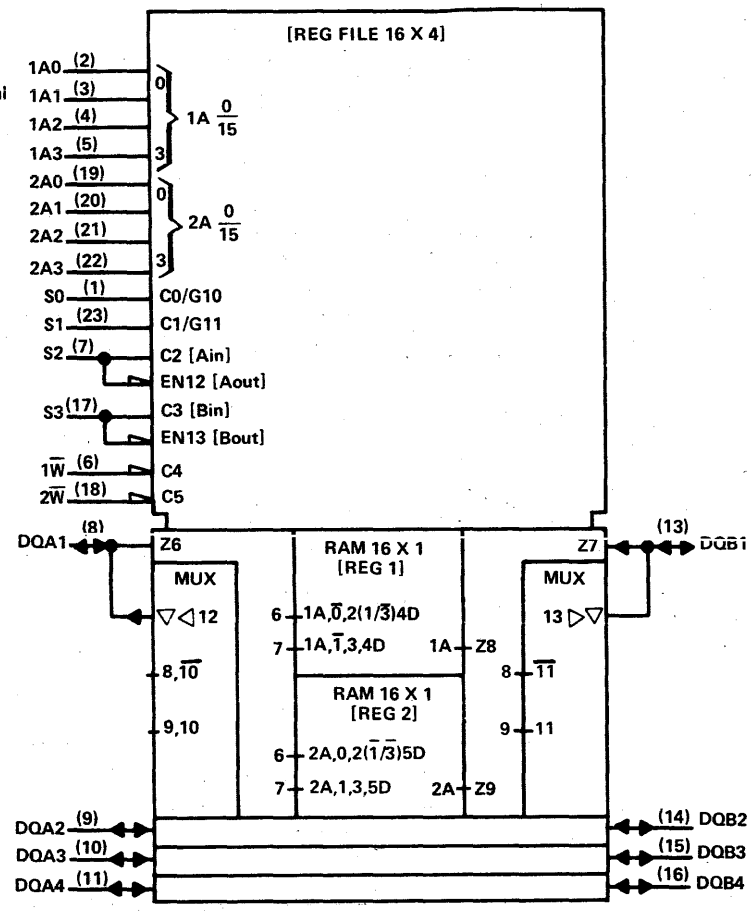

pin assignments

JT, NT PACKAGES			
1	S0	13	DQB1
2	1A0	14	DQB2
3	1A1	15	DQB3
4	1A2	16	DQB4
5	1A3	17	S3
6	1W	18	2W
7	S2	19	2A0
8	DQA1	20	2A1
9	DQA2	21	2A2
10	DQA3	22	2A3
11	DQA4	23	S1
12	GND	24	V_{CC}

FH, FN PACKAGES			
1	nc	15	nc
2	S0	16	DQB1
3	1A0	17	DQB2
4	1A1	18	DQB3
5	1A2	19	DQB4
6	1A3	20	S3
7	1W	21	2W
8	nc	22	nc
9	S2	23	2A0
10	DQA1	24	2A1
11	DQA2	25	2A2
12	DQA3	26	2A3
13	DQA4	27	S1
14	GND	28	V_{CC}

†Pin numbers shown on logic symbols are for JT and NT packages only.
nc — no internal connection.

Copyright © 1983 by Texas Instruments Incorporated.

871

DUAL 16-BY-4 REGISTER FILES

- Each register file has individual write/enable controls and address lines
- Has one 4-bit data I/O port; the other 4-bit data word has individual data inputs and data outputs
- 28-pin, 600-mil package

SN54AS871 (J,FH)
SN74AS871 (N,FN)

logic symbol†

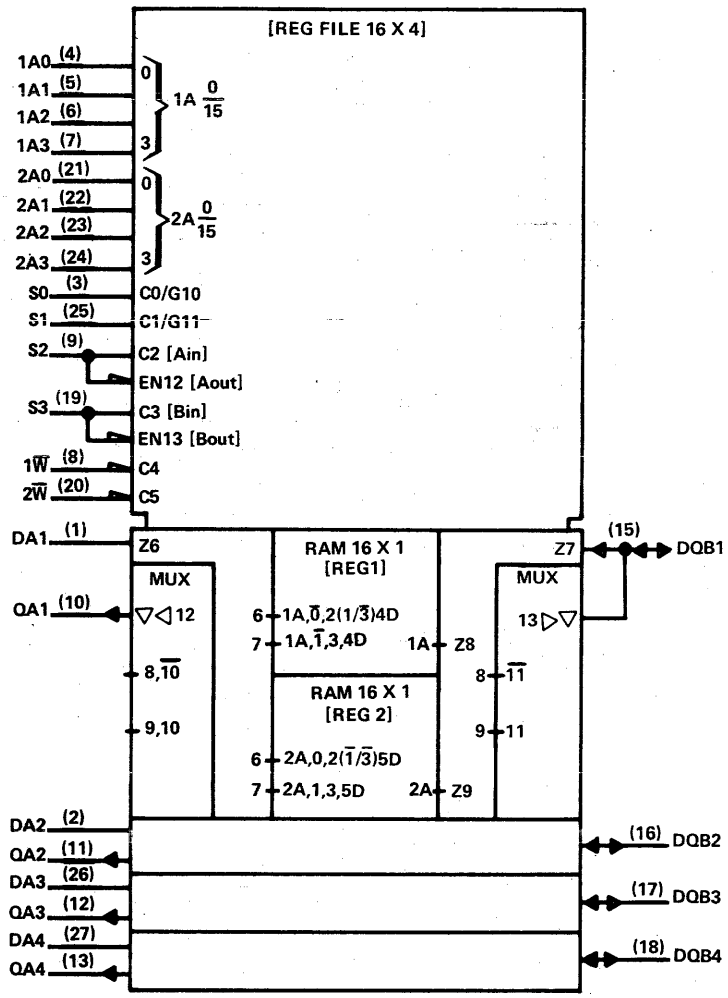

pin assignments

J, N PACKAGES			
1	DA1	15	DQB1
2	DA2	16	DQB2
3	S0	17	DQB3
4	1A0	18	DQB4
5	1A1	19	S3
6	1A2	20	$2\overline{W}$
7	1A3	21	2A0
8	$1\overline{W}$	22	2A1
9	S2	23	2A2
10	QA1	24	2A3
11	QA2	25	S1
12	QA3	26	DA3
13	QA4	27	DA4
14	GND	28	V_{CC}

FH, FN PACKAGES			
1	DA1	15	DQB1
2	DA2	16	DQB2
3	S0	17	DQB3
4	1A0	18	DQB4
5	1A1	19	S3
6	1A2	20	$2\overline{W}$
7	1A3	21	2A0
8	$1\overline{W}$	22	2A1
9	S2	23	2A2
10	QA1	24	2A3
11	QA2	25	S1
12	QA3	26	DA3
13	QA4	27	DA4
14	GND	28	V_{CC}

† Pin numbers shown on logic symbols are for J and N packages only.
nc — no internal connection.

See ALS/AS availability at front of this Product Guide.

Copyright © 1983 by Texas Instruments Incorporated.

873

DUAL 4-BIT D-TYPE LATCHES

- Three-state buffer-type outputs drive bus lines directly
- Each 4-bit word has enable, clear, and output control inputs

typical performance

TYPE	CLEAR	OUTPUT	DELAY	POWER
'ALS873	LOW	Q	11 ns	67.5 mW

SN54ALS873 (JT,FH) SN74ALS873 (NT,FN)
SN54AS873 (JT,FH) SN74AS873 (NT,FN)

logic symbol†

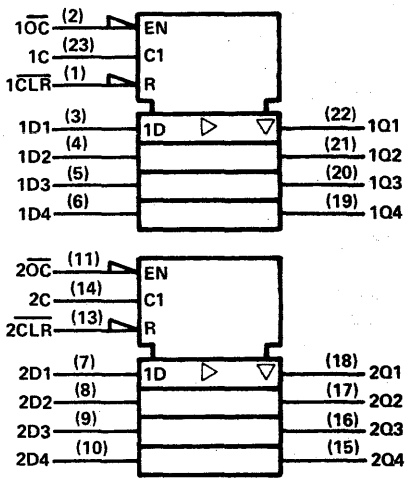

pin assignments

JT, NT PACKAGES				FH, FN PACKAGES			
1	1CLR	13	2CLR	1	nc	15	nc
2	1OC	14	2C	2	1CLR	16	2CLR
3	1D1	15	2Q4	3	1OC	17	2C
4	1D2	16	2Q3	4	1D1	18	2Q4
5	1D3	17	2Q2	5	1D2	19	2Q3
6	1D4	18	2Q1	6	1D3	20	2Q2
7	2D1	19	1Q4	7	1D4	21	2Q1
8	2D2	20	1Q3	8	nc	22	nc
9	2D3	21	1Q2	9	2D1	23	1Q4
10	2D4	22	1Q1	10	2D2	24	1Q3
11	2OC	23	1C	11	2D3	25	1Q2
12	GND	24	V_{CC}	12	2D4	26	1Q1
				13	2OC	27	1C
				14	GND	28	V_{CC}

874

DUAL 4-BIT D-TYPE EDGE-TRIGGERED FLIP-FLOPS

- Three-state buffer-type outputs
- Each 4-bit word has clock, clear, and output control inputs

typical performance

TYPE	FREQ	POWER	DATA TIMES	
			SET-UP	HOLD
SN54ALS874	50 MHz	86.7 mW	10 ns†	4 ns†
SN74ALS874	50 MHz	86.7 mW	10 ns†	0 ns†

† Rising edge of clock pulse

SN54ALS874 (JT,FH) SN74ALS874 (NT,FN)
SN54AS874 (JT,FH) SN74AS874 (NT,FN)

logic symbol†

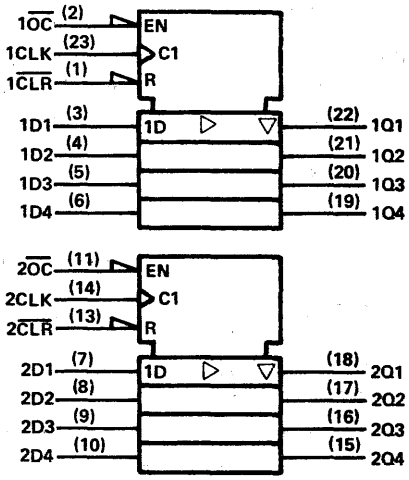

pin assignments

J, N PACKAGES				FH, FN PACKAGES			
1	1CLR	13	2CLR	1	nc	15	nc
2	1OC	14	2CLK	2	1CLR	16	2CLR
3	1D1	15	2Q4	3	1OC	17	2CLK
4	1D2	16	2Q3	4	1D1	18	2Q4
5	1D3	17	2Q2	5	1D2	19	2Q3
6	1D4	18	2Q1	6	1D3	20	2Q2
7	2D1	19	1Q4	7	1D4	21	2Q1
8	2D2	20	1Q3	8	nc	22	nc
9	2D3	21	1Q2	9	2D1	23	1Q4
10	2D4	22	1Q1	10	2D2	24	1Q3
11	2OC	23	1CLK	11	2D3	25	1Q2
12	GND	24	V_{CC}	12	2D4	26	1Q1
				13	2OC	27	1CLK
				14	GND	28	V_{CC}

†Pin numbers shown on logic symbols are for JT and NT packages only.
nc — no internal connection.

Copyright © 1983 by Texas Instruments Incorporated.

TEXAS INSTRUMENTS
POST OFFICE BOX 225012 • DALLAS, TEXAS 75265

© IC MASTER 1984

876

DUAL 4-BIT D-TYPE EDGE-TRIGGERED FLIP-FLOPS WITH INVERTED OUTPUTS

- Three-state buffer-type outputs drive bus lines directly
- Each 4-bit word has own clock, preset, and output control inputs

typical performance

TYPE	FREQ	POWER	DATA TIMES SET-UP	DATA TIMES HOLD
SN54ALS876	50 MHz	86.7 mW	10 ns†	4 ns†
SN74ALS876	50 MHz	86.7 mW	10 ns†	0 ns†

† Rising edge of clock pulse

SN54ALS876 (JT,FH) SN74ALS876 (NT,FN)
SN54AS876 (JT,FH) SN74AS876 (NT,FN)

logic symbol†

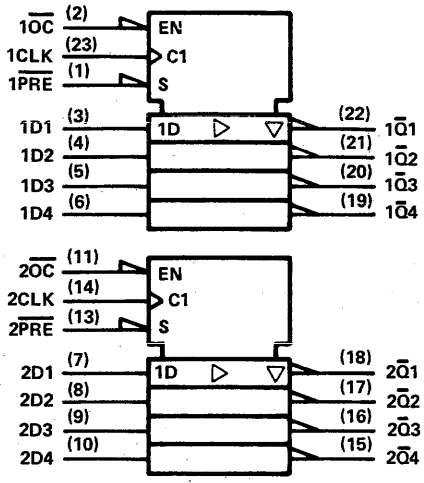

pin assignments

JT, NT PACKAGES			
1	1PRE	13	2PRE
2	1OC	14	2CLK
3	1D1	15	2Q4
4	1D2	16	2Q3
5	1D3	17	2Q2
6	1D4	18	2Q1
7	2D1	19	1Q4
8	2D2	20	1Q3
9	2D3	21	1Q2
10	2D4	22	1Q1
11	2OC	23	1CLK
12	GND	24	V_{CC}

FH, FN PACKAGES			
1	nc	15	nc
2	1PRE	16	2PRE
3	1OC	17	2CLK
4	1D1	18	2Q4
5	1D2	19	2Q3
6	1D3	20	2Q2
7	1D4	21	2Q1
8	nc	22	nc
9	2D1	23	1Q4
10	2D2	24	1Q3
11	2D3	25	1Q2
12	2D4	26	1Q1
13	2OC	27	1CLK
14	GND	28	V_{CC}

877

8-BIT UNIVERSAL TRANSCEIVER/PORT CONTROLLERS

- 8 selectable transceiver/port functions
- 3-state buffer-type outputs drive bus lines directly
- 24-pin 300-mil package

SN54AS877 (JT,FH)
SN74AS877 (NT,FN)

logic symbol†

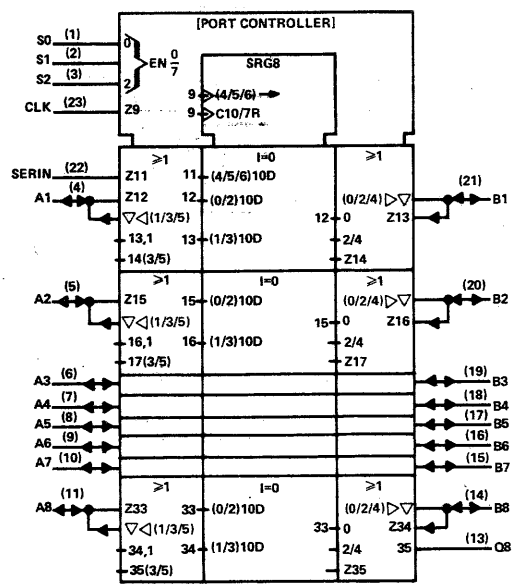

pin assignments

JT, NT PACKAGES				FH, FN PACKAGES			
1	S0	13	Q8	1	nc	15	nc
2	S1	14	B8	2	S0	16	Q8
3	S2	15	B7	3	S1	17	B8
4	A1	16	B6	4	S2	18	B7
5	A2	17	B5	5	A1	19	B6
6	A3	18	B4	6	A2	20	B5
7	A4	19	B3	7	A3	21	B4
8	A5	20	B2	8	nc	22	nc
9	A6	21	B1	9	A4	23	B3
10	A7	22	SERIN	10	A5	24	B2
11	A8	23	CLK	11	A6	25	B1
12	GND	24	V_{CC}	12	A7	26	SERIN
				13	A8	27	CLK
				14	GND	28	V_{CC}

†Pin numbers shown on logic symbols are for JT and NT packages only.
nc — no internal connection.

Copyright © 1983 by Texas Instruments Incorporated.

TEXAS INSTRUMENTS
POST OFFICE BOX 225012 • DALLAS, TEXAS 75265

878

DUAL 4-BIT D-TYPE EDGE-TRIGGERED FLIP-FLOPS

- Three-state buffer-type outputs
- Each 4-bit word has clock, clear, and output control inputs

typical performance

TYPE	FREQ	POWER	DATA TIMES	
			SET-UP	HOLD
SN54ALS878	50 MHz	86.7 mW	10 ns†	4 ns†
SN74ALS878	50 MHz	86.7 mW	10 ns†	0 ns†
SN54AS878				
SN74AS878				

†Rising edge of clock pulse
SN54ALS878 (JT,FH) SN74ALS878 (NT,FN)
SN54AS878 (JT,FH) SN74AS878 (NT,FN)

logic symbol, 'ALS878, 'AS878†

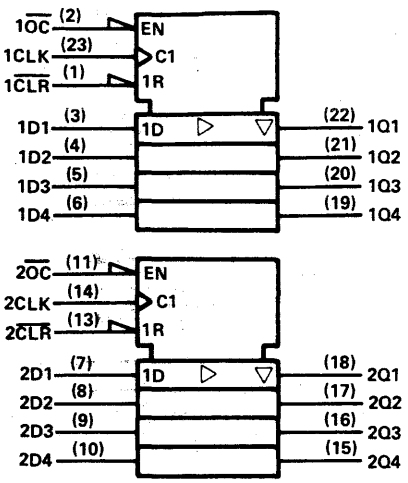

pin assignments

JT, NT PACKAGES			
1	1CLR	13	2CLR
2	1OC	14	2CLK
3	1D1	15	2Q4
4	1D2	16	2Q3
5	1D3	17	2Q2
6	1D4	18	2Q1
7	2D1	19	1Q4
8	2D2	20	1Q3
9	2D3	21	1Q2
10	2D4	22	1Q1
11	2OC	23	1CLK
12	GND	24	V_{CC}

FH, FN PACKAGES			
1	nc	15	nc
2	1CLR	16	2CLR
3	1OC	17	2CLK
4	1D1	18	2Q4
5	1D2	19	2Q3
6	1D3	20	2Q2
7	1D4	21	2Q1
8	nc	22	nc
9	2D1	23	1Q4
10	2D2	24	1Q3
11	2D3	25	1Q2
12	2D4	26	1Q1
13	2OC	27	1CLK
14	GND	28	V_{CC}

879

DUAL 4-BIT D-TYPE EDGE-TRIGGERED FLIP-FLOPS WITH INVERTED OUTPUTS

- Three state buffer-type outputs
- Each 4-bit word has clock, clear, and output control inputs.

typical performance

TYPE	FREQ	POWER	DATA TIMES	
			SET-UP	HOLD
SN54ALS879	50 MHz	86.7 mW	10 ns†	4 ns†
SN74ALS879	50 MHz	86.7 mW	10 ns†	0 ns†
SN54AS879				
SN74AS879				

†Rising edge of clock pulse
SN54ALS879 (JT,FH) SN74ALS879 (NT,FN)
SN54AS879 (JT,FH) SN74AS879 (NT,FN)

logic symbol, 'ALS879, 'AS879†

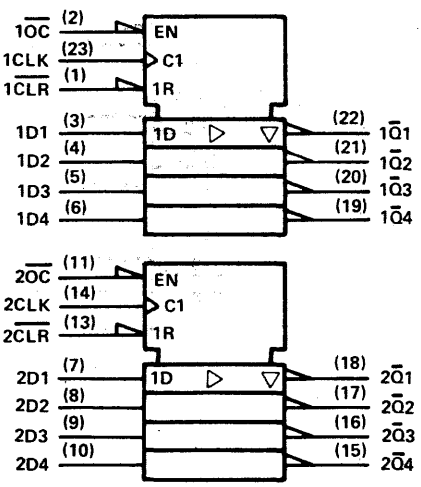

pin assignments

JT, NT PACKAGES			
1	1CLR	13	2CLR
2	1OC	14	2CLK
3	1D1	15	2Q̄4
4	1D2	16	2Q̄3
5	1D3	17	2Q̄2
6	1D4	18	2Q̄1
7	2D1	19	1Q̄4
8	2D2	20	1Q̄3
9	2D3	21	1Q̄2
10	2D4	22	1Q̄1
11	2OC	23	1CLK
12	GND	24	V_{CC}

FH, FN PACKAGES			
1	nc	15	nc
2	1CLR	16	2CLR
3	1OC	17	2CLK
4	1D1	18	2Q̄4
5	1D2	19	2Q̄3
6	1D3	20	2Q̄2
7	1D4	21	2Q̄1
8	nc	22	nc
9	2D1	23	1Q̄4
10	2D2	24	1Q̄3
11	2D3	25	1Q̄2
12	2D4	26	1Q̄1
13	2OC	27	1CLK
14	GND	28	V_{CC}

†Pin numbers shown on logic symbols are for JT and NT packages only.
nc – no internal connection.

Copyright © 1983 by Texas Instruments Incorporated.

880

DUAL 4-BIT D-TYPE LATCHES WITH INVERTED OUTPUTS

- Three-state buffer-type outputs drive bus lines directly
- Each 4-bit word has enable, preset, and output control inputs

typical performance

TYPE	OUTPUT	DELAY	POWER
'ALS880	$\overline{Q}$	11.5 ns	88 mW

SN54ALS880(JT,FH) SN74ALS880 (NT,FN)
SN54AS880 (JT,FH) SN74AS880 (NT,FN)

logic symbol†

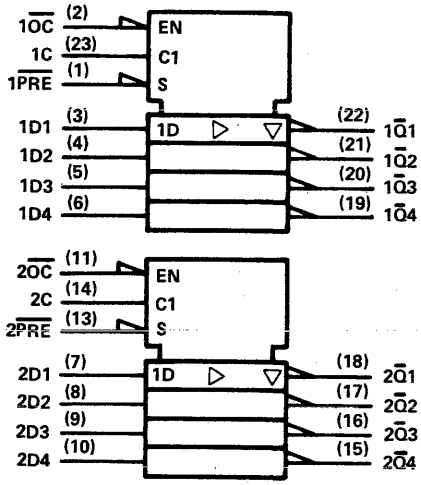

pin assignments

JT, NT PACKAGES				FH, FN PACKAGES			
1	1PRE	13	2PRE	1	nc	15	nc
2	1OC	14	2C	2	1PRE	16	2PRE
3	1D1	15	2Q4	3	1OC	17	2C
4	1D2	16	2Q3	4	1D1	18	2Q4
5	1D3	17	2Q2	5	1D2	19	2Q3
6	1D4	18	2Q1	6	1D3	20	2Q2
7	2D1	19	1Q4	7	1D4	21	2Q1
8	2D2	20	1Q3	8	nc	22	nc
9	2D3	21	1Q2	9	2D1	23	1Q4
10	2D4	22	1Q1	10	2D2	24	1Q3
11	2OC	23	1C	11	2D3	25	1Q2
12	GND	24	V_{CC}	12	2D4	26	1Q1
				13	2OC	27	1C
				14	GND	28	V_{CC}

881

ARITHMETIC LOGIC UNITS/ FUNCTION GENERATORS

- 4-bit ALU's/Function Generators
- Same operating modes as 'AS181A, 'S181A expanded to include status register checks

typical performance

TYPE	CARRY TIME	16-BIT ADD TIME	TOTAL POWER
'AS881A	7.5 ns	20 ns	560 mW

SN54AS881A (JT,FH)
SN74AS881A (NT,FN)

logic symbol†

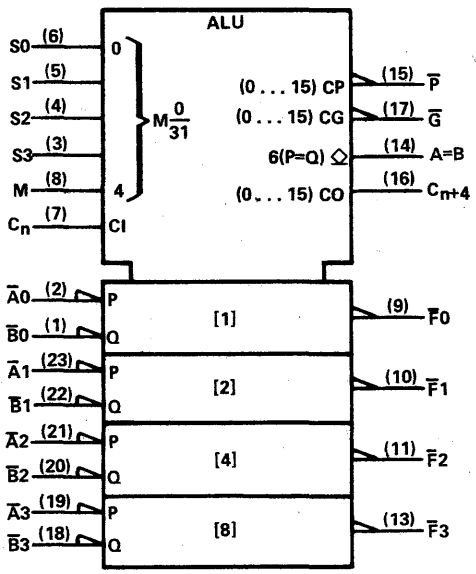

pin assignments

JT, NT PACKAGES			
1	$\overline{B}0$	13	$\overline{F}3$
2	$\overline{A}0$	14	A=B
3	S3	15	$\overline{P}$
4	S2	16	C_{n+4}
5	S1	17	$\overline{G}$
6	S0	18	$\overline{B}3$
7	C_n	19	$\overline{A}3$
8	M	20	$\overline{B}2$
9	$\overline{F}0$	21	$\overline{A}2$
10	$\overline{F}1$	22	$\overline{B}1$
11	$\overline{F}2$	23	$\overline{A}1$
12	GND	24	V_{CC}

FH, FN PACKAGES			
1	nc	15	nc
2	$\overline{B}0$	16	$\overline{F}3$
3	$\overline{A}0$	17	A=B
4	S3	18	$\overline{P}$
5	S2	19	C_{n+4}
6	S1	20	$\overline{G}$
7	S0	21	$\overline{B}3$
8	nc	22	nc
9	C_n	23	$\overline{A}3$
10	M	24	$\overline{B}2$
11	$\overline{F}0$	25	$\overline{A}2$
12	$\overline{F}1$	26	$\overline{B}1$
13	$\overline{F}2$	27	$\overline{A}1$
14	GND	28	V_{CC}

†Pin numbers shown on logic symbols are for JT and NT packages only.
nc – no internal connection.

Copyright © 1983 by Texas Instruments Incorporated.

TEXAS INSTRUMENTS
POST OFFICE BOX 225012 • DALLAS, TEXAS 75265

882

32-BIT LOOK-AHEAD CARRY GENERATORS

- Directly compatible with 'AS181, 'AS881, and 'S181 ALU's

typical performance

TYPE	CARRY TIME	TOTAL POWER
'AS882	8 ns	325 mW

SN54AS882 (JT,FH)

SN74AS882 (NT,FN)

logic symbol†

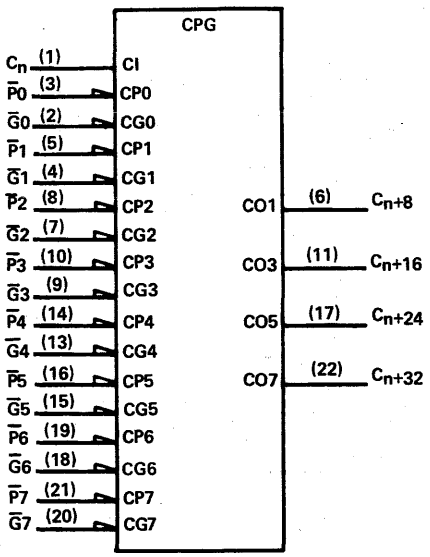

pin assignments

JT, NT PACKAGES				FH, FN PACKAGES			
1	C_n	13	$\overline{G}4$	1	nc	15	nc
2	$\overline{G}0$	14	$\overline{P}4$	2	C_n	16	$\overline{G}4$
3	$\overline{P}0$	15	$\overline{G}5$	3	$\overline{G}0$	17	$\overline{P}4$
4	$\overline{G}1$	16	$\overline{P}5$	4	$\overline{P}0$	18	$\overline{G}5$
5	$\overline{P}1$	17	C_{n+24}	5	$\overline{G}1$	19	$\overline{P}5$
6	C_{n+8}	18	$\overline{G}6$	6	$\overline{P}1$	20	C_{n+24}
7	$\overline{G}2$	19	$\overline{P}6$	7	C_{n+8}	21	$\overline{G}6$
8	$\overline{P}2$	20	$\overline{G}7$	8	nc	22	nc
9	$\overline{G}3$	21	$\overline{P}7$	9	$\overline{G}2$	23	$\overline{P}6$
10	$\overline{P}3$	22	C_{n+32}	10	$\overline{P}2$	24	$\overline{G}7$
11	C_{n+16}	23	nc	11	$\overline{G}3$	25	$\overline{P}7$
12	GND	24	V_{CC}	12	$\overline{P}3$	26	C_{n+32}
				13	C_{n+16}	27	nc
				14	GND	28	V_{CC}

885

8-BIT MAGNITUDE COMPARATORS

- Choice of logical or arithmetic comparisons
- Latchable P input ports; power clear

SN54AS885 (JT,FH)

SN74AS885 (NT,FN)

logic symbol†

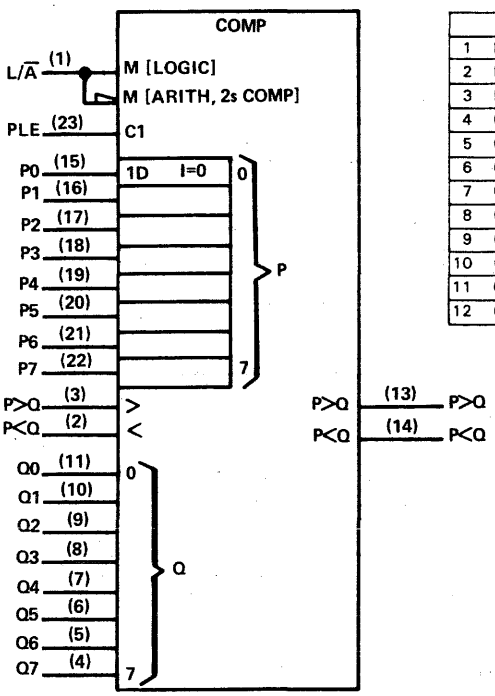

pin assignments

JT, NT PACKAGES				FH, FN PACKAGES			
1	L/Ā	13	P>Qout	1	nc	15	nc
2	P<Qin	14	P<Qout	2	L/Ā	16	P>Qout
3	P>Qin	15	P0	3	P<Qin	17	P<Qout
4	Q7	16	P1	4	P>Qin	18	P0
5	Q6	17	P2	5	Q7	19	P1
6	Q5	18	P3	6	Q6	20	P2
7	Q4	19	P4	7	Q5	21	P3
8	Q3	20	P5	8	nc	22	nc
9	Q2	21	P6	9	Q4	23	P4
10	Q1	22	P7	10	Q3	24	P5
11	Q0	23	PLE	11	Q2	25	P6
12	GND	24	V_{CC}	12	Q1	26	P7
				13	Q0	27	PLE
				14	GND	28	V_{CC}

†Pin numbers shown on logic symbols are for JT and NT packages only.

nc — no internal connection.

See ALS/AS availability at front of this Product Guide.

Copyright © 1983 by Texas Instruments Incorporated.

TEXAS INSTRUMENTS
POST OFFICE BOX 225012 • DALLAS, TEXAS 75265

© IC MASTER 1984

888, 889

8-BIT PROCESSOR SLICES

- STL-AS technology
- Parallel 8-bit ALU with expansion inputs and outputs
- 13 arithmetic and logic functions
- 8 conditional shifts (single and double length)
- 9 instructions that manipulate bytes
- 4 instructions that manipulate bits
- Add and subtract immediate instructions
- Absolute value instruction
- Signed magnitude to/from 2's complement conversion
- Polynomial code accumulation (CRC, FIRE, Computer Generated, etc.)
- Single- and double-length normalize
- Select functions
- Signed and unsigned divides with overflow detection; input does not need to be prescaled
- Signed, mixed, and unsigned multiples
- Three-operand, 16-word register file
- Full carry look ahead support
- Sign, carry out, overflow, and zero-detect status capabilities
- Excess-3 BCD arithmetic

SN54AS888 (JD) SN74AS888 (JD)
SN54AS889 (FN) SN74AS889 (FN)

pin assignments

JD PACKAGE

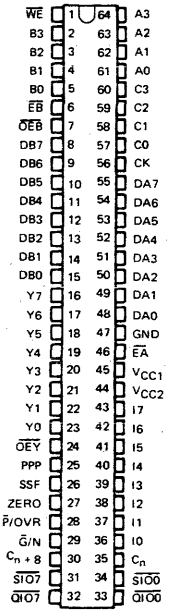

FN PACKAGE

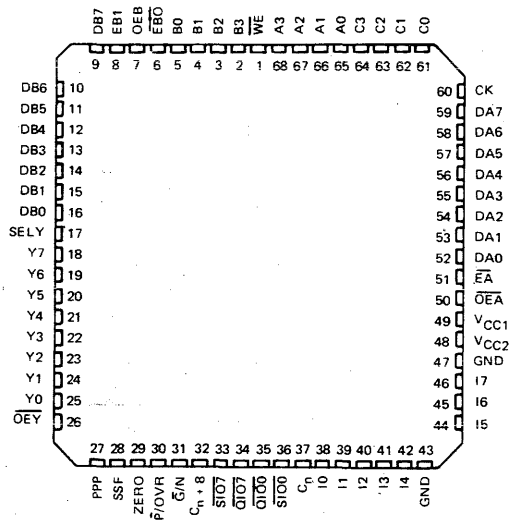

functional block diagram

'AS888

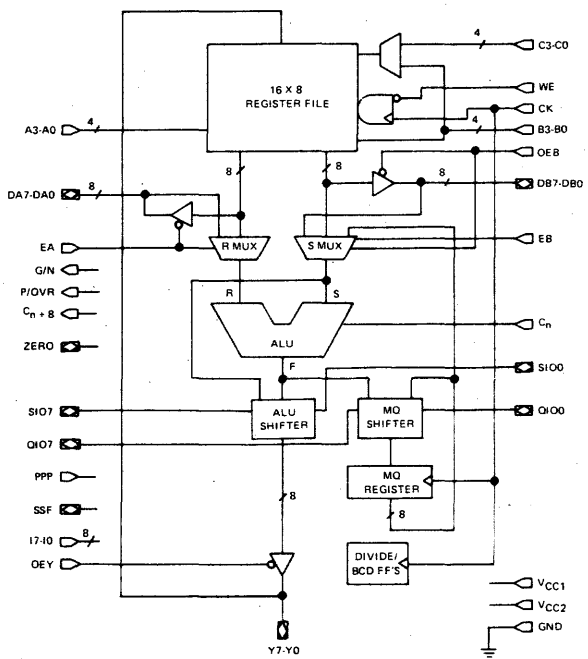

'AS889

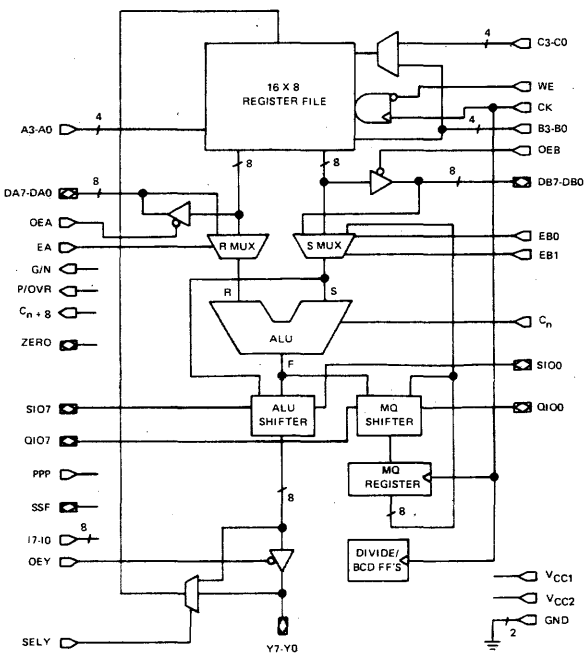

Refer to data sheet in this section for additional information.

See ALS/AS availability at front of this Product Guide.

Copyright © 1983 by Texas Instruments Incorporated.

TEXAS INSTRUMENTS
POST OFFICE BOX 225012 • DALLAS, TEXAS 75265

890, 891

MICROSEQUENCERS

- 14 bits wide — Addresses up to 16,384 words of microcode with one chip
- Selects address from one of eight sources
- STL-AS technology
- Independent read pointer for aid in microcode diagnostics
- Supports real-time interrupts
- Two independent loop counters
- Supports 64 powerful instructions

SN54AS890 (JD) SN74AS890 (JD)
SN54AS891 (FN) SN74AS891 (FN)

pin assignments

JD PACKAGE

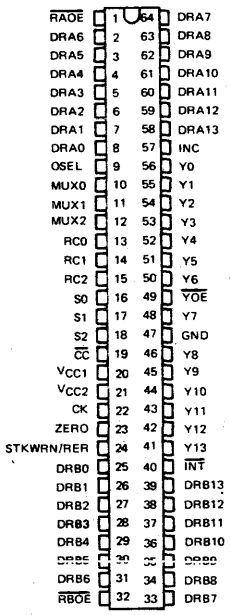

FN PACKAGE

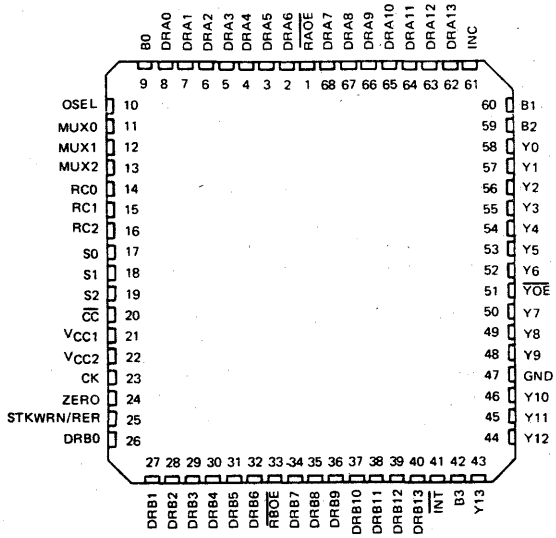

functional block diagram

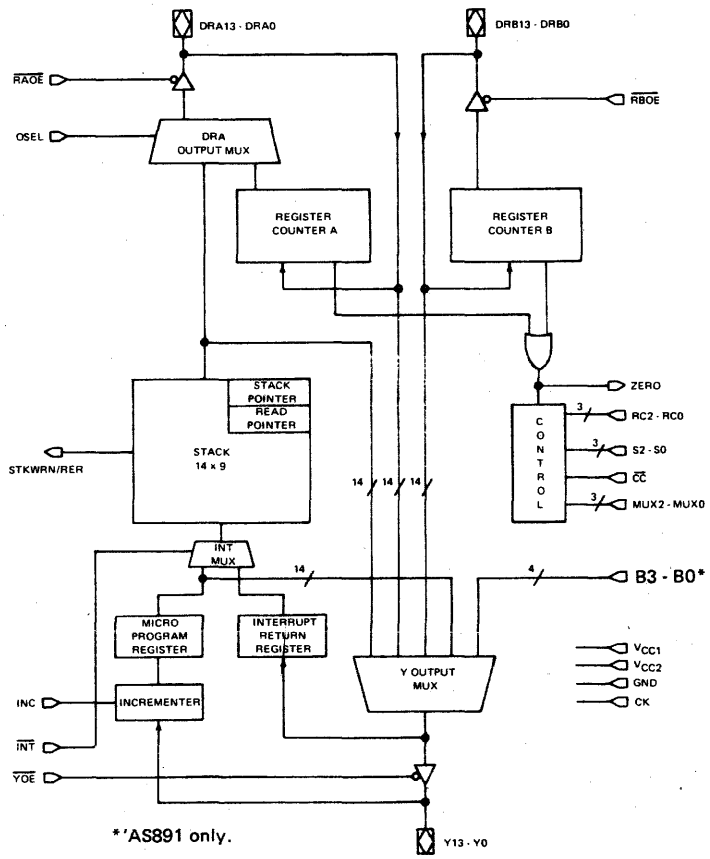

*'AS891 only.

Refer to data sheet in this section for additional information.

See ALS/AS availability at front of this Product Guide.

Copyright © 1983 by Texas Instruments Incorporated.

897

16-BIT EXPANDABLE BARREL SHIFTER

- Performs arithmetic, logical, and circular shifts on data in one clock cycle
- Performs bit set and reset operations and floating point normalizations
- Contains an internal counter for memory address and FFT bit reverse addressing
- Ideal for improving the shift throughout on a microprocessor or AS888 based system

SN54AS897 (JD) SN74AS897 (JD)

Contact factory for additional information

pin assignments

JD, N PACKAGES	
1 ZN3	27 V_{CC2}
2 ZN2	28 I0
3 ZN1	29 I1
4 ZN0	30 I2
5 D15	31 CLK
6 D14	32 Y0
7 D13	33 Y1
8 D12	34 Y2
9 D11	35 Y3
10 D10	36 Y4
11 D9	37 Y5
12 D8	38 Y6
13 GND	39 Y7
14 D7	40 GND
15 D6	41 Y8
16 D5	42 Y9
17 D4	43 Y10
18 D3	44 Y11
19 D2	45 Y12
20 D1	46 Y13
21 D0	47 Y14
22 IP	48 Y15
23 OP	49 $\overline{OEY}$
24 SYS16	50 $\overline{NORM}$
25 ZL	51 ZN4
26 S	52 V_{CC1}

For chip carrier information, contact the factory.

AS897 16-BIT EXPANDABLE BARREL SHIFTER

functional block diagram

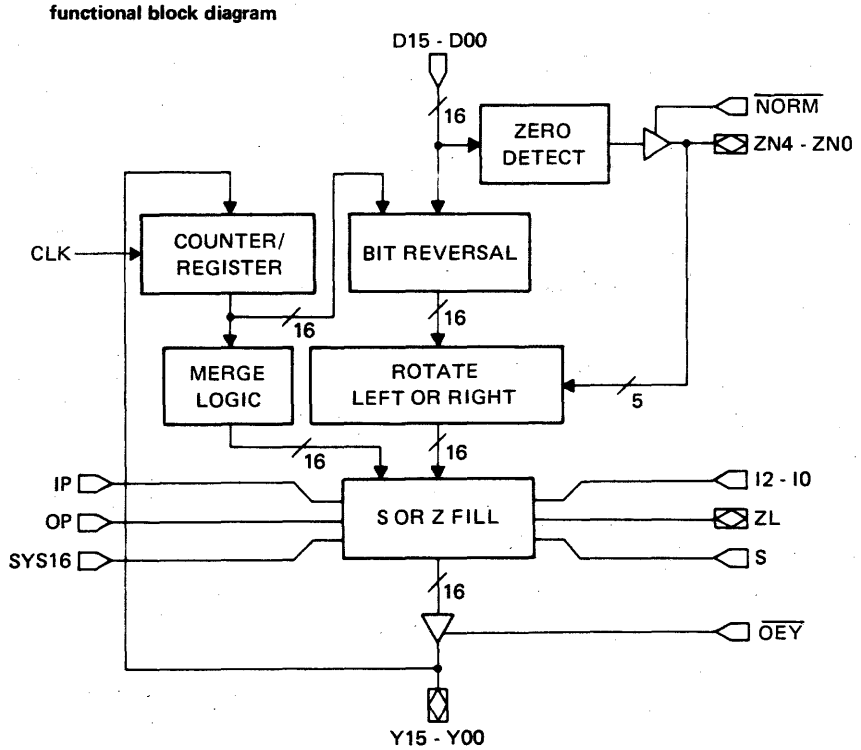

See ALS/AS availability at front of this Product Guide.

Copyright © 1983 by Texas Instruments Incorporated.

1000

QUAD 2-INPUT NAND BUFFERS/DRIVERS

- Increased output drive capability over 'LS00, 'ALS00, 'AS00

typical performance

TYPE	LOW-LEVEL OUTPUT CURRENT	HIGH-LEVEL OUTPUT CURRENT	DELAY	POWER/GATE
SN54ALS1000A	12 mA	– 1 mA	4 ns	3 mW
SN74ALS1000A	24 mA	– 2.6 mA	4 ns	3 mW
SN54AS1000	40 mA	– 40 mA	1.7 ns	8.6 mW
SN74AS1000	48 mA	– 48 mA	1.7 ns	8.6 mW

SN54ALS1000A (J,FH) SN74ALS1000A (N,FN)
SN54AS1000 (J,FH) SN74AS1000 (N,FN)

logic symbol†

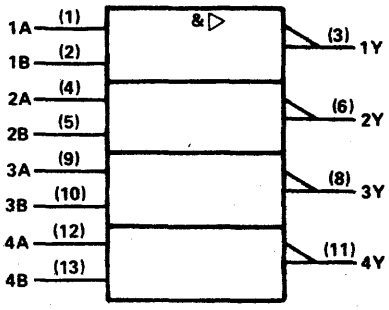

positive logic: $Y = \overline{AB}$

pin assignments

J, N PACKAGES			
1	1A	8	3Y
2	1B	9	3A
3	1Y	10	3B
4	2A	11	4Y
5	2B	12	4A
6	2Y	13	4B
7	GND	14	V_{CC}

FH, FN PACKAGES			
1	nc	11	nc
2	1A	12	3Y
3	1B	13	3A
4	1Y	14	3B
5	nc	15	nc
6	2A	16	4Y
7	nc	17	nc
8	2B	18	4A
9	2Y	19	4B
10	GND	20	V_{CC}

1002

QUAD 2-INPUT NOR BUFFER GATES

- Increased output drive capability over 'LS02,

typical performance

TYPE	LOW-LEVEL OUTPUT CURRENT	HIGH-LEVEL OUTPUT CURRENT	DELAY	POWER/GATE
SN54ALS1002A	12 mA	– 1 mA	4 ns	4 mW
SN74ALS1002A	24 mA	– 2.6 mA	4 ns	4 mW

SN54ALS1002A (J,FH) SN74ALS1002A (N,FN)

logic symbol†

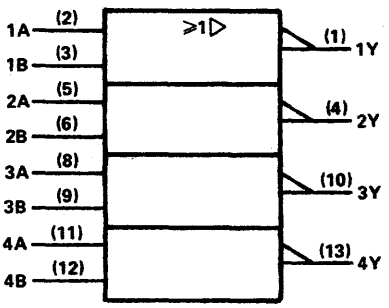

positive logic: $Y = \overline{A+B}$

pin assignments

J, N PACKAGES			
1	1Y	8	3A
2	1A	9	3B
3	1B	10	3Y
4	2Y	11	4A
5	2A	12	4B
6	2B	13	4Y
7	GND	14	V_{CC}

FH, FN PACKAGES			
1	nc	11	nc
2	1Y	12	3A
3	1A	13	3B
4	1B	14	3Y
5	nc	15	nc
6	2Y	16	4A
7	nc	17	nc
8	2A	18	4B
9	2B	19	4Y
10	GND	20	V_{CC}

† Pin numbers shown on logic symbols are for J and N packages only.
nc – no internal connection.

Copyright © 1983 by Texas Instruments Incorporated.

TEXAS INSTRUMENTS
POST OFFICE BOX 225012 • DALLAS, TEXAS 75265

© IC MASTER 1984

1003

QUAD 2-INPUT NAND BUFFER GATES WITH OPEN-COLLECTOR OUTPUTS

- Increased drive capability over 'LS03

typical performance

TYPE	HIGH-LEVEL OUTPUT VOLTAGE	LOW-LEVEL OUTPUT CURRENT	DELAY	POWER/GATE
SN54ALS1003A	5.5 V	12 mA	14.5 ns	3 mW
SN74ALS1003A	5.5 V	24 mA	14.5 ns	3 mW

SN54ALS1003A (J,FH) SN74ALS1003A (N,FN)

logic symbol†

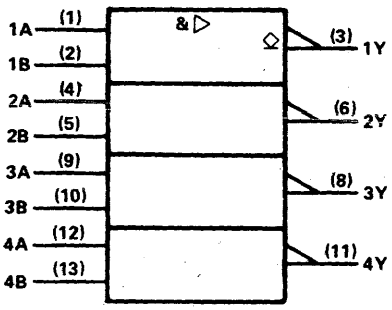

positive logic: $Y = \overline{AB}$

pin assignments

J, N PACKAGES			
1	1A	8	3Y
2	1B	9	3A
3	1Y	10	3B
4	2A	11	4Y
5	2B	12	4A
6	2Y	13	4B
7	GND	14	V_{CC}

FH, FN PACKAGES			
1	nc	11	nc
2	1A	12	3Y
3	1B	13	3A
4	1Y	14	3B
5	nc	15	nc
6	2A	16	4Y
7	nc	17	nc
8	2B	18	4A
9	2Y	19	4B
10	GND	20	V_{CC}

1004

HEX DRIVERS

- Increased drive capability over LS04, ALS04, AS04

typical performance

TYPE	LOW-LEVEL OUTPUT CURRENT	HIGH-LEVEL OUTPUT CURRENT
SN54ALS1004	12 mA	−12 mA
SN74ALS1004	24 mA	−15 mA
SN54AS1004	40 mA	−40 mA
SN74AS1004	48 mA	−48 mA

SN54ALS1004 (J,FH) SN74ALS1004 (N,FN)
SN54AS1004 (J,FH) SN74AS1004 (N,FN)

logic symbol†

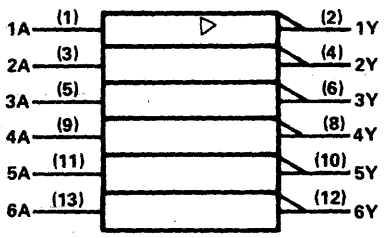

positive logic: $Y = \overline{A}$

pin assignments

J, N PACKAGES			
1	1A	8	4Y
2	1Y	9	4A
3	2A	10	5Y
4	2Y	11	5A
5	3A	12	6Y
6	3Y	13	6A
7	GND	14	V_{CC}

FH, FN PACKAGES			
1	nc	11	nc
2	1A	12	4Y
3	1Y	13	4A
4	2A	14	5Y
5	nc	15	nc
6	2Y	16	5A
7	nc	17	nc
8	3A	18	6Y
9	3Y	19	6A
10	GND	20	V_{CC}

1005

HEX INVERTER BUFFER GATES WITH OPEN-COLLECTOR OUTPUTS

- Increased drive capability over LS05

typical performance

TYPE	LOW-LEVEL OUTPUT CURRENT	HIGH-LEVEL OUTPUT CURRENT
SN54ALS1005	12 mA	−1 mA
SN74ALS1005	24 mA	−2.6 mA

SN54ALS1005 (J,FH) SN74ALS1005 (N,FN)

logic symbol†

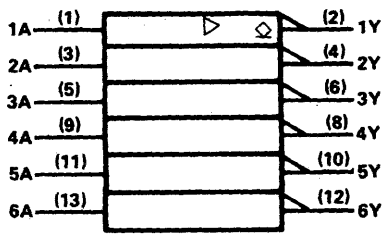

positive logic: $Y = \overline{A}$

pin assignments

J, N PACKAGES			
1	1A	8	4Y
2	1Y	9	4A
3	2A	10	5Y
4	2Y	11	5A
5	3A	12	6Y
6	3Y	13	6A
7	GND	14	V_{CC}

FH, FN PACKAGES			
1	nc	11	nc
2	1A	12	4Y
3	1Y	13	4A
4	2A	14	5Y
5	nc	15	nc
6	2Y	16	5A
7	nc	17	nc
8	3A	18	6Y
9	3Y	19	6A
10	GND	20	V_{CC}

† Pin numbers shown on logic symbols are for J and N packages only.
nc — no internal connection.

See ALS/AS availability at front of this Product Guide.

Copyright © 1983 by Texas Instruments Incorporated.

TEXAS INSTRUMENTS
POST OFFICE BOX 225012 • DALLAS, TEXAS 75265

1008

QUADRUPLE 2-INPUT POSITIVE-AND BUFFERS/DRIVERS

- Increased drive capability over LS08, ALS08, AS08

typical performance

TYPE	LOW-LEVEL OUTPUT CURRENT	HIGH-LEVEL OUTPUT CURRENT
SN54ALS1008A	12 mA	– 1 mA
SN74ALS1008A	24 mA	– 2.6 mA
SN54AS1008	40 mA	– 40 mA
SN74AS1008	48 mA	– 48 mA

SN54ALS1008A (J,FH) SN74ALS1008A (N,FN)
SN54AS1008 (J,FH) SN74AS1008 (N,FN)

logic symbol†

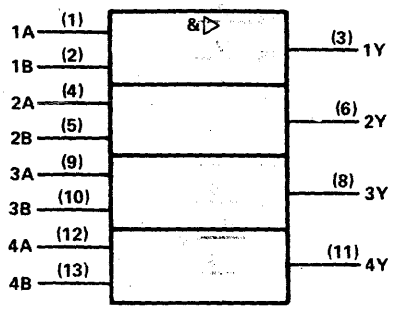

positive logic: Y = AB

pin assignments

J, N PACKAGES			
1	1A	8	3Y
2	1B	9	3A
3	1Y	10	3B
4	2A	11	4Y
5	2B	12	4A
6	2Y	13	4B
7	GND	14	V_{CC}

FH, FN PACKAGES			
1	nc	11	nc
2	1A	12	3Y
3	1B	13	3A
4	1Y	14	3B
5	nc	15	nc
6	2A	16	4Y
7	nc	17	nc
8	2B	18	4A
9	2Y	19	4B
10	GND	20	V_{CC}

1010

TRIPLE 3-INPUT POSITIVE-NAND BUFFER GATES

- Increased drive capability over LS10

typical performance

TYPE	LOW-LEVEL OUTPUT CURRENT	HIGH-LEVEL OUTPUT CURRENT
SN54ALS1010A	12 mA	– 1 mA
SN74ALS1010A	24 mA	– 2.6 mA

SN54ALS1010A (J,FH) SN74ALS1010A (N,FN)

logic symbol†

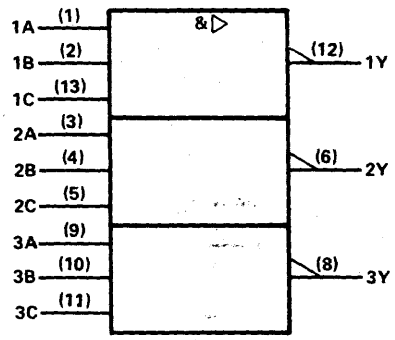

positive logic: $Y = \overline{ABC}$

pin assignments

J, N PACKAGES			
1	1A	8	3Y
2	1B	9	3A
3	2A	10	3B
4	2B	11	3C
5	2C	12	1Y
6	2Y	13	1C
7	GND	14	V_{CC}

FH, FN PACKAGES			
1	nc	11	nc
2	1A	12	3Y
3	1B	13	3A
4	2A	14	3B
5	nc	15	nc
6	2B	16	3C
7	nc	17	nc
8	2C	18	1Y
9	2Y	19	1C
10	GND	20	V_{CC}

1011

TRIPLE 3-INPUT POSITIVE-AND BUFFER GATES

- Increased drive capability over LS11

typical performance

TYPE	LOW-LEVEL OUTPUT CURRENT	HIGH-LEVEL OUTPUT CURRENT
SN54ALS1011A	12 mA	– 1 mA
SN74ALS1011A	24 mA	– 2.6 mA

SN54ALS1011A (J,FH) SN74ALS1011A (N,FN)

logic symbol†

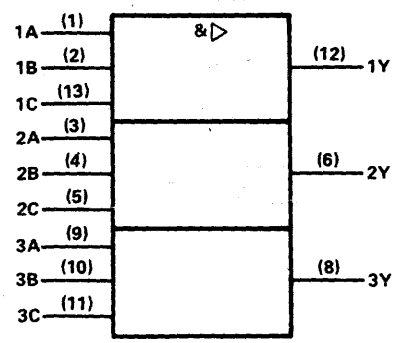

positive logic: Y = ABC

pin assignments

J, N PACKAGES			
1	1A	8	3Y
2	1B	9	3A
3	2A	10	3B
4	2B	11	3C
5	2C	12	1Y
6	2Y	13	1C
7	GND	14	V_{CC}

FH, FN PACKAGES			
1	nc	11	nc
2	1A	12	3Y
3	1B	13	3A
4	2A	14	3B
5	nc	15	nc
6	2B	16	3C
7	nc	17	nc
8	2C	18	1Y
9	2Y	19	1C
10	GND	20	V_{CC}

† Pin numbers shown on logic symbols are for J and N packages only.
nc no internal connection.

Copyright © 1983 by Texas Instruments Incorporated.

1003

QUAD 2-INPUT NAND BUFFER GATES WITH OPEN-COLLECTOR OUTPUTS

- Increased drive capability over 'LS03

typical performance

TYPE	HIGH-LEVEL OUTPUT VOLTAGE	LOW-LEVEL OUTPUT CURRENT	DELAY	POWER/ GATE
SN54ALS1003A	5.5 V	12 mA	14.5 ns	3 mW
SN74ALS1003A	5.5 V	24 mA	14.5 ns	3 mW

SN54ALS1003A (J,FH) SN74ALS1003A (N,FN)

logic symbol†

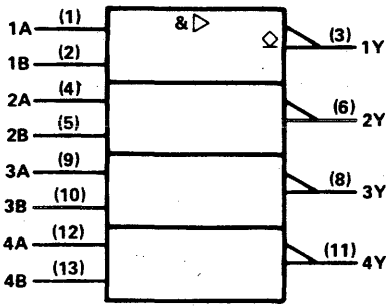

positive logic: $Y = \overline{AB}$

pin assignments

J, N PACKAGES			
1	1A	8	3Y
2	1B	9	3A
3	1Y	10	3B
4	2A	11	4Y
5	2B	12	4A
6	2Y	13	4B
7	GND	14	V_{CC}

FH, FN PACKAGES			
1	nc	11	nc
2	1A	12	3Y
3	1B	13	3A
4	1Y	14	3B
5	nc	15	nc
6	2A	16	4Y
7	nc	17	nc
8	2B	18	4A
9	2Y	19	4B
10	GND	20	V_{CC}

1004

HEX DRIVERS

- Increased drive capability over LS04, ALS04, AS04

typical performance

TYPE	LOW-LEVEL OUTPUT CURRENT	HIGH-LEVEL OUTPUT CURRENT
SN54ALS1004	12 mA	– 12 mA
SN74ALS1004	24 mA	– 15 mA
SN54AS1004	40 mA	– 40 mA
SN74AS1004	48 mA	– 48 mA

SN54ALS1004 (J,FH) SN74ALS1004 (N,FN)
SN54AS1004 (J,FH) SN74AS1004 (N,FN)

logic symbol†

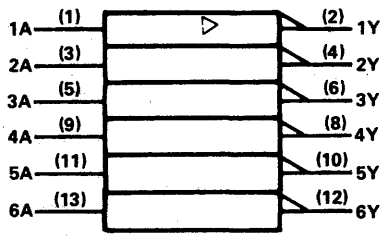

positive logic: $Y = \overline{A}$

pin assignments

J, N PACKAGES			
1	1A	8	4Y
2	1Y	9	4A
3	2A	10	5Y
4	2Y	11	5A
5	3A	12	6Y
6	3Y	13	6A
7	GND	14	V_{CC}

FH, FN PACKAGES			
1	nc	11	nc
2	1A	12	4Y
3	1Y	13	4A
4	2A	14	5Y
5	nc	15	nc
6	2Y	16	5A
7	nc	17	nc
8	3A	18	6Y
9	3Y	19	6A
10	GND	20	V_{CC}

1005

HEX INVERTER BUFFER GATES WITH OPEN-COLLECTOR OUTPUTS

- Increased drive capability over LS05

typical performance

TYPE	LOW-LEVEL OUTPUT CURRENT	HIGH-LEVEL OUTPUT CURRENT
SN54ALS1005	12 mA	–1 mA
SN74ALS1005	24 mA	–2.6 mA

SN54ALS1005 (J,FH) SN74ALS1005 (N,FN)

logic symbol†

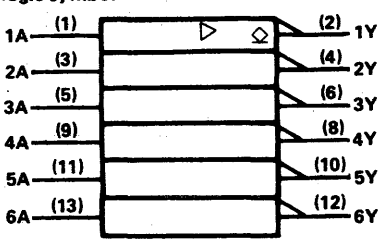

positive logic: $Y = \overline{A}$

pin assignments

J, N PACKAGES			
1	1A	8	4Y
2	1Y	9	4A
3	2A	10	5Y
4	2Y	11	5A
5	3A	12	6Y
6	3Y	13	6A
7	GND	14	V_{CC}

FH, FN PACKAGES			
1	nc	11	nc
2	1A	12	4Y
3	1Y	13	4A
4	2A	14	5Y
5	nc	15	nc
6	2Y	16	5A
7	nc	17	nc
8	3A	18	6Y
9	3Y	19	6A
10	GND	20	V_{CC}

† Pin numbers shown on logic symbols are for J and N packages only.
nc – no internal connection.

See ALS/AS availability at front of this Product Guide.

Copyright © 1983 by Texas Instruments Incorporated.

TEXAS INSTRUMENTS
POST OFFICE BOX 225012 • DALLAS, TEXAS 75265

1008

QUADRUPLE 2-INPUT POSITIVE-AND BUFFERS/DRIVERS

- Increased drive capability over LS08, ALS08, AS08

typical performance

TYPE	LOW-LEVEL OUTPUT CURRENT	HIGH-LEVEL OUTPUT CURRENT
SN54ALS1008A	12 mA	– 1 mA
SN74ALS1008A	24 mA	– 2.6 mA
SN54AS1008	40 mA	– 40 mA
SN74AS1008	48 mA	– 48 mA

SN54ALS1008A (J,FH) SN74ALS1008A (N,FN)
SN54AS1008 (J,FH) SN74AS1008 (N,FN)

logic symbol†

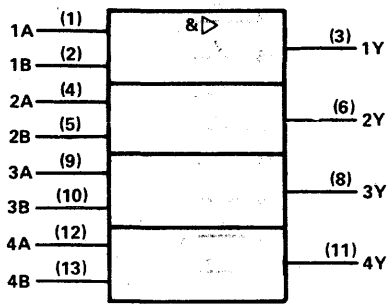

positive logic: Y = AB

pin assignments

J, N PACKAGES				FH, FN PACKAGES			
1	1A	8	3Y	1	nc	11	nc
2	1B	9	3A	2	1A	12	3Y
3	1Y	10	3B	3	1B	13	3A
4	2A	11	4Y	4	1Y	14	3B
5	2B	12	4A	5	nc	15	nc
6	2Y	13	4B	6	2A	16	4Y
7	GND	14	V_{CC}	7	nc	17	nc
				8	2B	18	4A
				9	2Y	19	4B
				10	GND	20	V_{CC}

1010

TRIPLE 3-INPUT POSITIVE-NAND BUFFER GATES

- Increased drive capability over LS10

typical performance

TYPE	LOW-LEVEL OUTPUT CURRENT	HIGH-LEVEL OUTPUT CURRENT
SN54ALS1010A	12 mA	– 1 mA
SN74ALS1010A	24 mA	– 2.6 mA

SN54ALS1010A (J,FH) SN74ALS1010A (N,FN)

logic symbol†

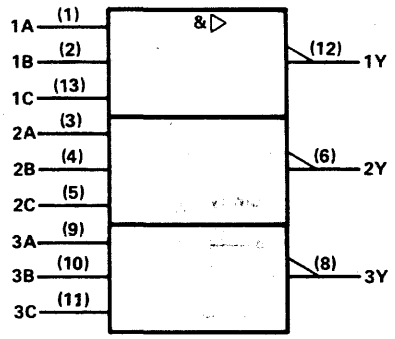

positive logic: $Y = \overline{ABC}$

pin assignments

J, N PACKAGES				FH, FN PACKAGES			
1	1A	8	3Y	1	nc	11	nc
2	1B	9	3A	2	1A	12	3Y
3	2A	10	3B	3	1B	13	3A
4	2B	11	3C	4	2A	14	3B
5	2C	12	1Y	5	nc	15	nc
6	2Y	13	1C	6	2B	16	3C
7	GND	14	V_{CC}	7	nc	17	nc
				8	2C	18	1Y
				9	2Y	19	1C
				10	GND	20	V_{CC}

1011

TRIPLE 3-INPUT POSITIVE-AND BUFFER GATES

- Increased drive capability over LS11

typical performance

TYPE	LOW-LEVEL OUTPUT CURRENT	HIGH-LEVEL OUTPUT CURRENT
SN54ALS1011A	12 mA	– 1 mA
SN74ALS1011A	24 mA	– 2.6 mA

SN54ALS1011A (J,FH) SN74ALS1011A (N,FN)

logic symbol†

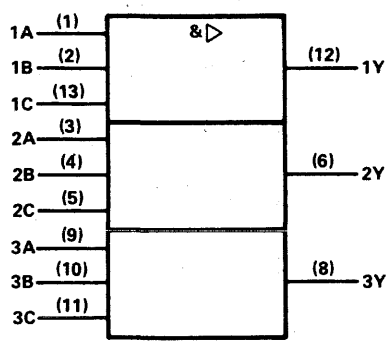

positive logic: Y = ABC

pin assignments

J, N PACKAGES				FH, FN PACKAGES			
1	1A	8	3Y	1	nc	11	nc
2	1B	9	3A	2	1A	12	3Y
3	2A	10	3B	3	1B	13	3A
4	2B	11	3C	4	2A	14	3B
5	2C	12	1Y	5	nc	15	nc
6	2Y	13	1C	6	2B	16	3C
7	GND	14	V_{CC}	7	nc	17	nc
				8	2C	18	1Y
				9	2Y	19	1C
				10	GND	20	V_{CC}

† Pin numbers shown on logic symbols are for J and N packages only.
nc – no internal connection.

Copyright © 1983 by Texas Instruments Incorporated.

1020

DUAL 4-INPUT NAND BUFFER GATES

- Increased drive capability over LS20

typical performance

TYPE	LOW-LEVEL OUTPUT CURRENT	HIGH-LEVEL OUTPUT CURRENT
SN54ALS1020A	12 mA	– 1 mA
SN74ALS1020A	24 mA	– 2.6 mA

SN54ALS1020A (J,FH) SN74ALS1020A (N,FN)

logic symbol†

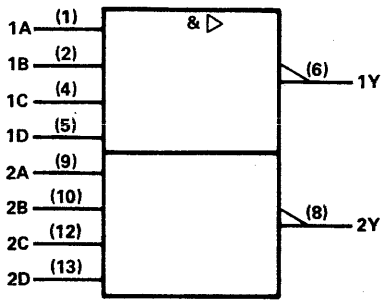

positive logic: $Y = \overline{ABCD}$

pin assignments

J, N PACKAGES				FH, FN PACKAGES			
1	1A	8	2Y	1	nc	11	nc
2	1B	9	2A	2	1A	12	2Y
3	nc	10	2B	3	1B	13	2A
4	1C	11	nc	4	nc	14	2B
5	1D	12	2C	5	nc	15	nc
6	1Y	13	2D	6	1C	16	nc
7	GND	14	V_{CC}	7	nc	17	nc
				8	1D	18	2C
				9	1Y	19	2D
				10	GND	20	V_{CC}

1032

QUADRUPLE 2-INPUT POSITIVE-OR BUFFER GATE

- Increased drive capability over LS32, ALS32, AS32

typical performance

TYPE	LOW-LEVEL OUTPUT CURRENT	HIGH-LEVEL OUTPUT CURRENT
SN54ALS1032A	12 mA	– 1 mA
SN74ALS1032A	24 mA	– 2.6 mA
SN54AS1032	40 mA	– 40 mA
SN74AS1032	48 mA	– 48 mA

SN54ALS1032A (J,FH) SN74ALS1032A (N,FN)
SN54AS1032 (J,FH) SN74AS1032 (N,FN)

logic symbol†

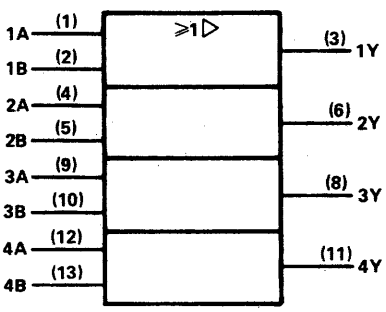

positive logic: $Y = A+B$

pin assignments

J, N PACKAGES				FH, FN PACKAGES			
1	1A	8	3Y	1	nc	11	nc
2	1B	9	3A	2	1A	12	3Y
3	1Y	10	3B	3	1B	13	3A
4	2A	11	4Y	4	1Y	14	3B
5	2B	12	4A	5	nc	15	nc
6	2Y	13	4B	6	2A	16	4Y
7	GND	14	V_{CC}	7	nc	17	nc
				8	2B	18	4A
				9	2Y	19	4B
				10	GND	20	V_{CC}

† Pin numbers shown on logic symbols are for J and N packages only.
nc – no internal connection.

Copyright © 1983 by Texas Instruments Incorporated.

1034

HEX DRIVERS

- Non-inverting outputs

typical performance

TYPE	LOW-LEVEL OUTPUT CURRENT	HIGH-LEVEL OUTPUT CURRENT
SN54ALS1034	12 mA	– 12 mA
SN74ALS1034	24 mA	– 15 mA
SN54AS1034	40 mA	– 40 mA
SN74AS1034	48 mA	– 48 mA

SN54ALS1034 (J,FH) SN74ALS1034 (N,FN)
SN54AS1034 (J,FH) SN74AS1034 (N,FN)

logic symbol†

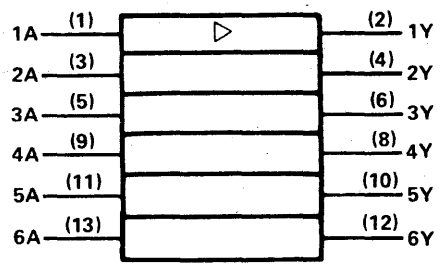

positive logic Y = A

pin assignments

J, N PACKAGES				FH, FN PACKAGES			
1	1A	8	4Y	1	nc	11	nc
2	1Y	9	4A	2	1A	12	4Y
3	2A	10	5Y	3	1Y	13	4A
4	2Y	11	5A	4	2A	14	5Y
5	3A	12	6Y	5	nc	15	nc
6	3Y	13	6A	6	2Y	16	5A
7	GND	14	V_{CC}	7	nc	17	nc
				8	3A	18	6Y
				9	3Y	19	6A
				10	GND	20	V_{CC}

1035

HEX BUFFERS WITH OPEN-COLLECTOR OUTPUTS

- Non-inverting outputs

typical performance

TYPE	LOW-LEVEL OUTPUT CURRENT	HIGH-LEVEL OUTPUT VOLTAGE
SN54ALS1035	12 mA	5.5 V
SN74ALS1035	24 mA	5.5 V

SN54ALS1035 (J,FH) SN74ALS1035 (N,FN)

logic symbol†

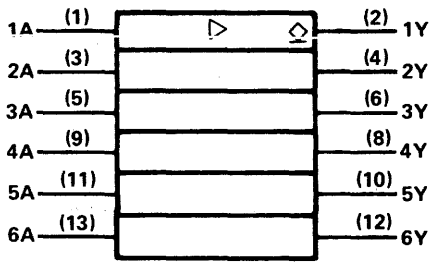

Positive logic Y = A

pin assignments

J, N PACKAGES				FH, FN PACKAGES			
1	1A	8	4Y	1	nc	11	nc
2	1Y	9	4A	2	1A	12	4Y
3	2A	10	5Y	3	1Y	13	4A
4	2Y	11	5A	4	2A	14	5Y
5	3A	12	6Y	5	nc	15	nc
6	3Y	13	6A	6	2Y	16	5A
7	GND	14	V_{CC}	7	nc	17	nc
				8	3A	18	6Y
				9	3Y	19	6A
				10	GND	20	V_{CC}

1036

QUADRUPLE 2-INPUT POSITIVE NOR DRIVERS

- Quad version of 'AS805A

typical performance

TYPE	LOW-LEVEL OUTPUT CURRENT	HIGH-LEVEL OUTPUT CURRENT
SN54AS1036	40 mA	– 40 mA
SN74AS1036	48 mA	– 48 mA

logic symbol†

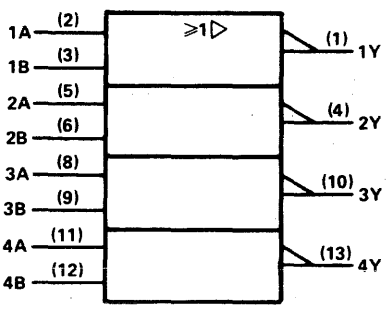

positive logic: $Y = \overline{A+B}$

pin assignments

J,N PACKAGES				FH,FN PACKAGES			
1	1A	8	3Y	1	nc	11	nc
2	1B	9	3A	2	1A	12	3Y
3	1Y	10	3B	3	1B	13	3A
4	2A	11	4Y	4	1Y	14	3B
5	2B	12	4A	5	nc	15	nc
6	2Y	13	4B	6	2A	16	4Y
7	GND	14	V_{CC}	7	nc	17	nc
				8	2B	18	4A
				9	2Y	19	4B
				10	GND	20	V_{CC}

†Pin numbers shown on logic symbols are for J and N packages only.
nc — no internal connection.

Copyright © 1983 by Texas Instruments Incorporated.

1240

OCTAL BUFFERS/LINE DRIVERS/LINE RECEIVERS
(inverted three-state outputs)

- Low power version of 'ALS240, AS240

typical performance

TYPE	DELAY	MAX SOURCE CURRENT	MAX SINK CURRENT	POWER DISSIPATION
SN54ALS1240	9	−12 mA	8 mA	47.5 mW
SN74ALS1240	9	−15 mA	16 mA	
SN74ALS1240-1	9	−15 mA	24 mA	

SN54ALS1240 (J,FH) SN74ALS1240 (N, FN)
SN74ALS1240-1 (N,FN)

logic symbol†

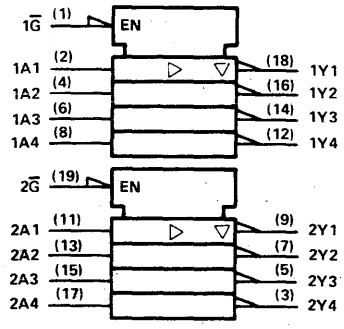

pin assignments

J, N PACKAGES				FH, FN PACKAGES			
1	1G̅	11	2A1	1	1G̅	11	2A1
2	1A1	12	1Y4	2	1A1	12	1Y4
3	2Y4	13	2A2	3	2Y4	13	2A2
4	1A2	14	1Y3	4	1A2	14	1Y3
5	2Y3	15	2A3	5	2Y3	15	2A3
6	1A3	16	1Y2	6	1A3	16	1Y2
7	2Y2	17	2A4	7	2Y2	17	2A4
8	1A4	18	1Y1	8	1A4	18	1Y1
9	2Y1	19	2G̅	9	2Y1	19	2G̅
10	GND	20	V_{CC}	10	GND	20	V_{CC}

1241

OCTAL BUFFERS/LINE DRIVERS/LINE RECEIVERS
(non-inverted three-state outputs)

- Low power version of 'ASL241, LS241

typical performance

TYPE	DELAY	MAX SOURCE CURRENT	MAX SINK CURRENT	POWER DISSIPATION
SN54ALS1241	9	−12 mA	8 mA	47.5 mW
SN74ALS1241	9	−15 mA	16 mA	
SN74ALS1241-1	9	−15 mA	24 mA	

SN54ALS1241 (J,FH) SN74ALS1241 (N,FN)
SN74ALS1241-1 (N,FN)

logic symbol†

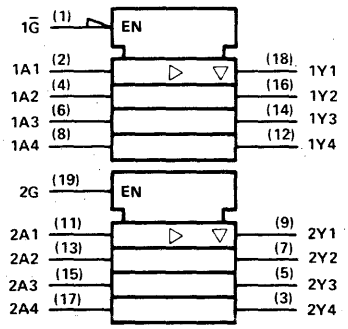

pin assignments

J, N PACKAGES				FH, FN PACKAGES			
1	1G̅	11	2A1	1	1G̅	11	2A1
2	1A1	12	1Y4	2	1A1	12	1Y4
3	2Y4	13	2A2	3	2Y4	13	2A2
4	1A2	14	1Y3	4	1A2	14	1Y3
5	2Y3	15	2A3	5	2Y3	15	2A3
6	1A3	16	1Y2	6	1A3	16	1Y2
7	2Y2	17	2A4	7	2Y2	17	2A4
8	1A4	18	1Y1	8	1A4	18	1Y1
9	2Y1	19	2G	9	2Y1	19	2G
10	GND	20	V_{CC}	10	GND	20	V_{CC}

1242

QUADRUPLE BUS TRANSCEIVERS
(inverted three-state outputs)

- Low power version of ALS242, LS242

typical performance

TYPE	DELAY	MAX SOURCE CURRENT	MAX SINK CURRENT	POWER DISSIPATION
SN54ALS1242		−12 mA	8 mA	
SN74ALS1242		−15 mA	16 mA	
SN74ALS1242-1		−15 mA	24 mA	

SN54ALS1242 (J,FH) SN74ALS1242 (N, FN)
SN74ALS1242-1 (N,FN)

logic symbol†

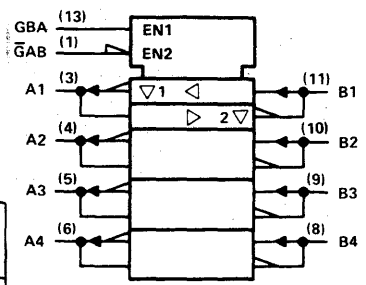

pin assignments

J, N PACKAGES				FH, FN PACKAGES			
1	G̅AB	8	B4	1	nc	11	nc
2	nc	9	B3	2	G̅AB	12	B4
3	A1	10	B2	3	nc	13	B3
4	A2	11	B1	4	A1	14	B2
5	A3	12	nc	5	nc	15	nc
6	A4	13	GBA	6	A2	16	B1
7	GND	14	V_{CC}	7	nc	17	nc
				8	A3	18	nc
				9	A4	19	GBA
				10	GND	20	V_{CC}

†Pin numbers shown on logic symbols are for J and N packages only.
nc — no internal connection.

Copyright © 1983 by Texas Instruments Incorporated.

TEXAS INSTRUMENTS
POST OFFICE BOX 225012 • DALLAS, TEXAS 75265

1243

QUADRUPLE BUS TRANSCEIVERS
(non-inverted three-state outputs)

- Low power version of ALS243, LS243

typical performance

TYPE	DELAY	MAX SOURCE CURRENT	MAX SINK CURRENT	POWER DISSI-PATION
SN54ALS1243		−12 mA	8 mA	
SN74ALS1243		−15 mA	16 mA	
SN74ALS1243-1		−15 mA	24 mA	

SN54ALS1243 (J,FH) SN74ALS1243 (N,FN)
SN74ALS1243-1 (N,FN)

logic symbol†

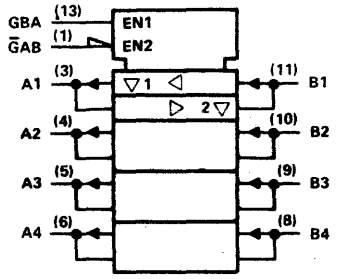

pin assignments

J, N PACKAGES				FH, FN PACKAGES			
1	ḠAB	8	B4	1	nc	11	nc
2	nc	9	B3	2	ḠAB	12	B4
3	A1	10	B2	3	nc	13	B3
4	A2	11	B1	4	A1	14	B2
5	A3	12	nc	5	nc	15	nc
6	A4	13	GBA	6	A2	16	B1
7	GND	14	V_{CC}	7	nc	17	nc
				8	A3	18	nc
				9	A4	19	GBA
				10	GND	20	V_{CC}

1244

OCTAL BUFFERS/LINE DRIVERS/LINE RECEIVERS
(non-inverted three-state outputs)

- Low power version of ALS244, LS244

typical performance

TYPE	DELAY	MAX SOURCE CURRENT	MAX SINK CURRENT	POWER DISSI-PATION
SN54ALS1244A	9 ns	−12 mA	8 mA	
SN74ALS1244A	9 ns	−15 mA	16 mA	45 mW
SN74ALS1244A-1	9 ns	−15 mA	24 mA	

SN54ALS1244A (J,FH) SN74ALS1244A (N,FN)
SN74ALS1244A-1 (N,FN)

logic symbol†

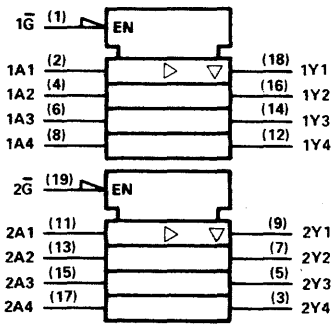

pin assignments

J, N PACKAGES				FH, FN PACKAGES			
1	1Ḡ	11	2A1	1	1Ḡ	11	2A1
2	1A1	12	1Y4	2	1A1	12	1Y4
3	2Y4	13	2A2	3	2Y4	13	2A2
4	1A2	14	1Y3	4	1A2	14	1Y3
5	2Y3	15	2A3	5	2Y3	15	2A3
6	1A3	16	1Y2	6	1A3	16	1Y2
7	2Y2	17	2A4	7	2Y2	17	2A4
8	1A4	18	1Y1	8	1A4	18	1Y1
9	2Y1	19	2Ḡ	9	2Y1	19	2Ḡ
10	GND	20	V_{CC}	10	GND	20	V_{CC}

1245

OCTAL BUS TRANSCEIVERS
(non-inverted three-state outputs)

- Low power version of ALS245, LS245

typical performance

TYPE	DELAY	MAX SOURCE CURRENT	MAX SINK CURRENT	POWER DISSI-PATION
SN54ALS1245	8	−12 mA	8 mA	
SN74ALS1245	8	−15 mA	16 mA	113 mW
SN74ALS1245-1	8	−15 mA	24 mA	

SN54ALS1245 (J,FH) SN74ALS1245 (N,FN)
SN74ALS1245-1 (N,FN)

logic symbol†

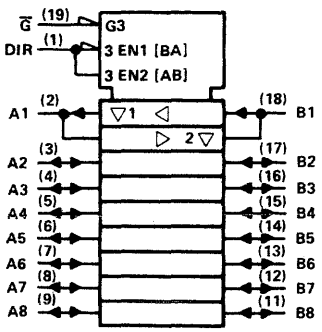

pin assignments

J, N PACKAGES				FH, FN PACKAGES			
1	DIR	11	B8	1	DIR	11	B8
2	A1	12	B7	2	A1	12	B7
3	A2	13	B6	3	A2	13	B6
4	A3	14	B5	4	A3	14	B5
5	A4	15	B4	5	A4	15	B4
6	A5	16	B3	6	A5	16	B3
7	A6	17	B2	7	A6	17	B2
8	A7	18	B1	8	A7	18	B1
9	A8	19	Ḡ	9	A8	19	Ḡ
10	GND	20	V_{CC}	10	GND	20	V_{CC}

†Pin numbers shown on logic symbols are for J and N packages only.
nc — no internal connection.

Copyright © 1983 by Texas Instruments Incorporated.

TEXAS INSTRUMENTS
POST OFFICE BOX 225012 • DALLAS, TEXAS 75265

© IC MASTER 1984

1616

16-×-16-BIT MULTIMODE MULTIPLIERS

- Multiplies Any Combination of Unsigned, Signed, Integer, or Fractional Inputs
- Registered Inputs and Outputs
- Comparable to TRW's MPY-16HJ
- Choice of Single-Signed, Double-Signed, Unsigned, or Signed Fractionally Adjusted Output
- Overflow Detected if a Combination of Input Data and/or Output Formats Result in a Number that Cannot be Represented
- Rounding is Provided for Both Integer and Fractional Results
- Flexible Input-Output Format Aids in Expansion to Multiple Precision Results
- 55 ns Typical Unclocked Multiply Time
- Power Dissipation Approximately 1.5 W
- 3-State Outputs
- Ideal for Signal Processing, Including Digital Filters, FFTs, and Automatic Line Integration
- Output may be Complemented
- Package Options Include Both Plastic and Ceramic Chip Carriers in Addition to Plastic and Ceramic DIPs
- Dependable Texas Instruments Quality and Reliability

logic symbol

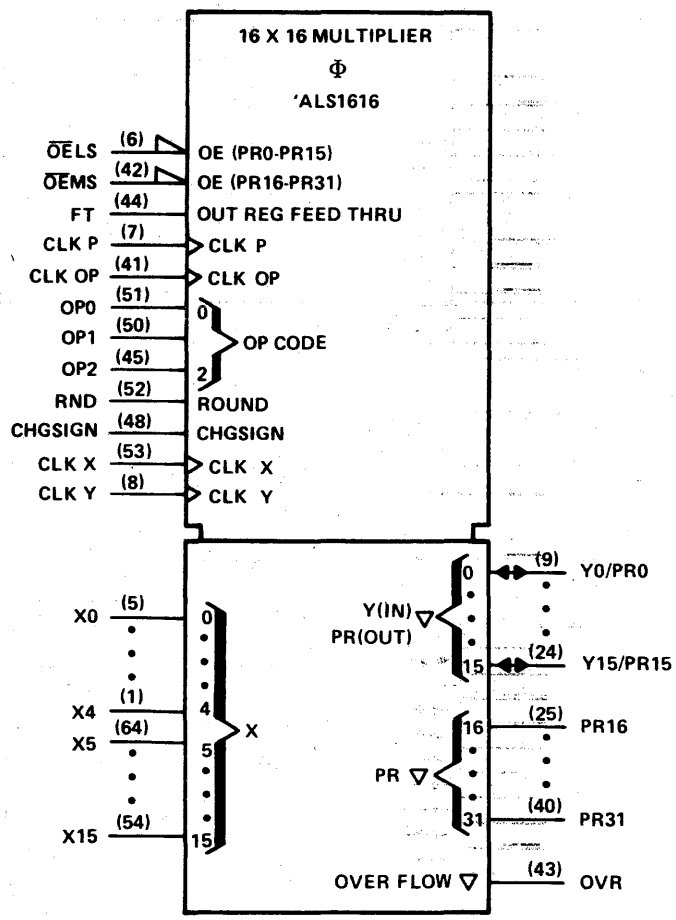

pin assignments

JD PACKAGE			
1	X4	33	PR24
2	X3	34	PR25
3	X2	35	PR26
4	X1	36	PR27
5	X0	27	PR28
6	OELS	38	PR29
7	CLKP	39	PR30
8	CLKY	40	PR31
9	Y0/PRO	41	CLKOP
10	Y1/PR1	42	OEMS
11	Y2/PR2	43	OVR
12	Y3/PR3	44	FT
13	Y4/PR4	45	OP2
14	Y5/PR5	46	GND
15	Y6/PR6	47	GND
16	Y7/PR7	48	CHGSIGN
17	Y8/PR8	49	V_{CC}
18	Y9/PR9	50	OP1
19	Y10/PR10	51	OP0
20	Y11/PR11	52	RND
21	Y12/PR12	53	CLKX
22	Y13/PR13	54	X15
23	Y14/PR14	55	X14
24	Y15/PR15	56	X13
25	PR16	57	X12
26	PR17	58	X11
27	PR18	59	X10
28	PR19	60	X9
29	PR20	61	X8
20	PR21	62	X7
31	PR22	63	X6
32	PR23	64	X5

For chip carrier information, contact the factory.

SN54ALS1616 (JD) SN74ALS1616 (JD)

See ALS/AS availability at front of this Product Guide.

Copyright © 1983 by Texas Instruments Incorporated.

1620, 1621, 1622, 1623

OCTAL BUS TRANSCEIVERS

- Bidirectional bus transceivers
- Low power version of ALS 620, 621, 622, 623

typical performance

TYPE	OUTPUT	MAX SOURCE CURRENT	MAX SINK CURRENT
SN54ALS1620	3-State	−12	8 mA
SN74ALS1620	3-State	−15	16 mA
SN74ALS1620-1	3-State	−15	24 mA
SN54ALS1621	O-C	N/A	8 mA
SN74ALS1621	O-C	N/A	16 mA
SN74ALS1621-1	O-C	N/A	24 mA
SN54ALS1622	O-C	N/A	8 mA
SN74ALS1622	O-C	N/A	16 mA
SN74ALS1622-1	O-C	N/A	24 mA
SN54ALS1623	3-State	−12	8 mA
SN74ALS1623	3-State	−15	16 mA
SN74ALS1623-1	3-State	−15	24 mA

SN54ALS1620 (J,FH) SN74ALS1620 (N,FN)
SN74ALS1620-1 (N,FN)
SN54ALS1621 (J,FH) SN74ALS1621 (N,FN)
SN74ALS1621-1 (N,FN)
SN54ALS1622 (J,FH) SN74ALS1622 (N,FN)
SN74ALS1622-1 (N,FN)
SN54ALS1623 (J,FH) SN74ALS1623 (N,FN)
SN74ALS1623-1 (N,FN)

logic symbol, 'ALS1620†

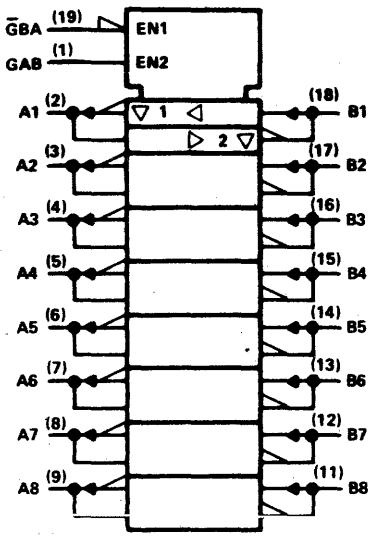

pin assignments

J, N PACKAGES				FH, FN PACKAGES			
1	GAB	11	B8	1	GAB	11	B8
2	A1	12	B7	2	A1	12	B7
3	A2	13	B6	3	A2	13	B6
4	A3	14	B5	4	A3	14	B5
5	A4	15	B4	5	A4	15	B4
6	A5	16	B3	6	A5	16	B3
7	A6	17	B2	7	A6	17	B2
8	A7	18	B1	8	A7	18	B1
9	A8	19	$\overline{GBA}$	9	A8	19	$\overline{GBA}$
10	GND	20	V_{CC}	10	GND	20	V_{CC}

logic symbol, 'ALS1622†

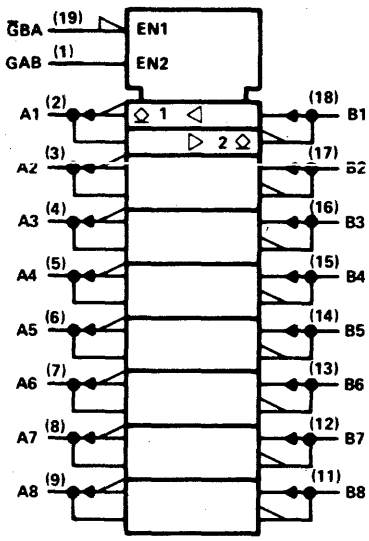

logic symbol, 'ALS1621†

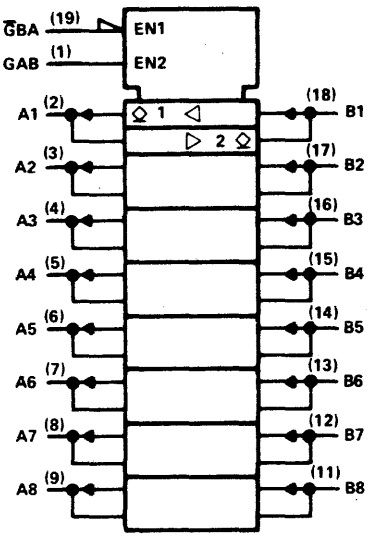

logic symbol, 'ALS1623†

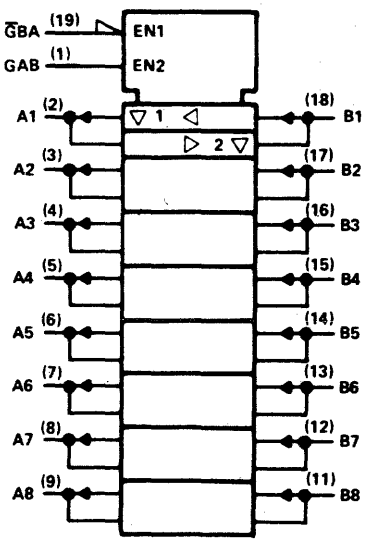

†Pin numbers shown on logic symbols are for J and N packages only.
nc — no internal connection.

Copyright © 1983 by Texas Instruments Incorporated.

1638, 1639

OCTAL BUS TRANSCEIVERS

- Bidirectional bus transceivers
- "A" bus outputs are open-collector: "B" bus outputs are three-state
- 'ALS1638—inverting logic
- 'ALS1639—true logic
- Low power versions of 'ALS638, 'ALS639

typical performance

TYPE	DELAY	MAX SOURCE CURRENT	MAX SINK CURRENT
SN54ALS1638	7 ns	−12 mA	8 mA
SN74ALS1638	7 ns	−15 mA	16 mA
SN74ALS1638-1	7 ns	−15 mA	24 mA
SN54ALS1639	8 ns	−12 mA	8 mA
SN74ALS1639	8 ns	−15 mA	16 mA
SN74ALS1639-1	8 ns	−15 mA	24 mA

SN54ALS1638 (J,FH) SN74ALS1638 (N,FN)
SN54ALS1639 (J,FH) SN74ALS1639 (N,FN)
SN74ALS1638-1 (N,FN)
SN74ALS1639-1 (N,FN)

logic symbol, 'ALS1638†

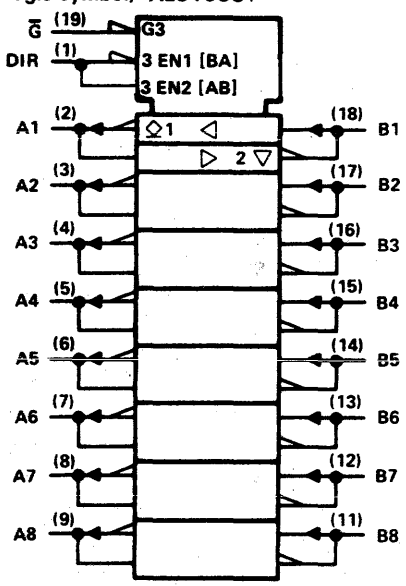

logic symbol, 'ALS1639†

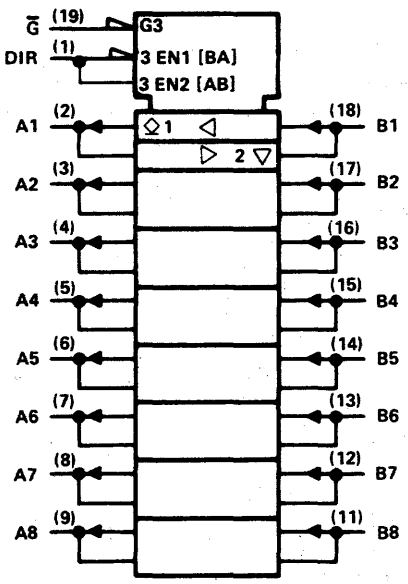

pin assignments

J, N PACKAGES			
1	DIR	11	B8
2	A1	12	B7
3	A2	13	B6
4	A3	14	B5
5	A4	15	B4
6	A5	16	B3
7	A6	17	B2
8	A7	18	B1
9	A8	19	G̅
10	GND	20	V_{CC}

FH, FN PACKAGES			
1	DIR	11	B8
2	A1	12	B7
3	A2	13	B6
4	A3	14	B5
5	A4	15	B4
6	A5	16	B3
7	A6	17	B2
8	A7	18	B1
9	A8	19	G̅
10	GND	20	V_{CC}

† Pin numbers shown on logic symbols are for J and N packages only.
nc — no internal connection.

Copyright © 1983 by Texas Instruments Incorporated.

1640A, 1641, 1642, 1643, 1644, 1645

OCTAL BUS TRANSCEIVERS

- Low power versions of 'ALS640A, 'ALS641, 'ALS642 'ALS643, 'ALS644, 'ALS645A

typical performance

TYPE	OUTPUT	DELAY	MAX SOURCE CURRENT	MAX SINK CURRENT
SN54ALS1640A	3-State	7 ns	−12 mA	8 mA
SN74ALS1640A	3-State	7 ns	−15 mA	16 mA
SN74ALS1640A-1	3-State	7 ns	−15 mA	24 mA
SN54ALS1641	O-C		N/A	8 mA
SN74ALS1641	O-C		N/A	16 mA
SN74ALS1641-1	O-C		N/A	24 mA
SN54ALS1642	O-C		N/A	8 mA
SN74ALS1642	O-C		N/A	16 mA
SN74ALS1642-1	O-C		N/A	24 mA
SN54ALS1643	3-State		−12 mA	8 mA
SN74ALS1643	3-State		−15 mA	16 mA
SN74ALS1643-1	3-State		−15 mA	24 mA
SN54ALS1644	O-C		N/A	8 mA
SN74ALS1644	O-C		N/A	16 mA
SN74ALS1644-1	O-C		N/A	24 mA
SN54ALS1645	3-State	10 ns	−12 mA	8 mA
SN74ALS1645	3-State	10 ns	−15 mA	16 mA
SN74ALS1645-1	3-State	10 ns	−15 mA	24 mA

SN54ALS1640A (J,FH)
SN54ALS1641 (J,FH)
SN54ALS1642 (J,FH)
SN54ALS1643 (J,FH)
SN54ALS1644 (J,FH)
SN54ALS1645 (J,FH)

SN74ALS1640A (N,FN)
SN74ALS1641 (N,FN)
SN74ALS1642 (N,FN)
SN74ALS1643 (N,FN)
SN74ALS1644 (N,FN)
SN74ALS1645 (N,FN)
SN74ALS1640A-1 (N,FN)
SN74ALS1641-1 (N,FN)
SN74ALS1642-1 (N,FN)
SN74ALS1643-1 (N,FN)
SN74ALS1644-1 (N,FN)
SN74ALS1645-1 (N,FN)

pin assignments

J, N PACKAGES				FH, FN PACKAGES			
1	DIR	11	B8	1	DIR	11	B8
2	A1	12	B7	2	A1	12	B7
3	A2	13	B6	3	A2	13	B6
4	A3	14	B5	4	A3	14	B5
5	A4	15	B4	5	A4	15	B4
6	A5	16	B3	6	A5	16	B3
7	A6	17	B2	7	A6	17	B2
8	A7	18	B1	8	A7	18	B1
9	A8	19	$\overline{G}$	9	A8	19	$\overline{G}$
10	GND	20	V_{CC}	10	GND	20	V_{CC}

logic symbol, 'ALS1640A†

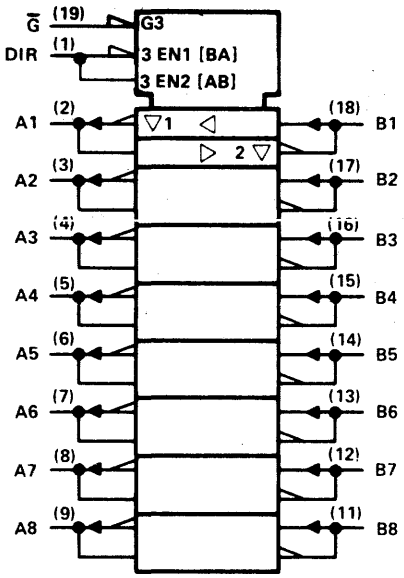

logic symbol, 'ALS1641†

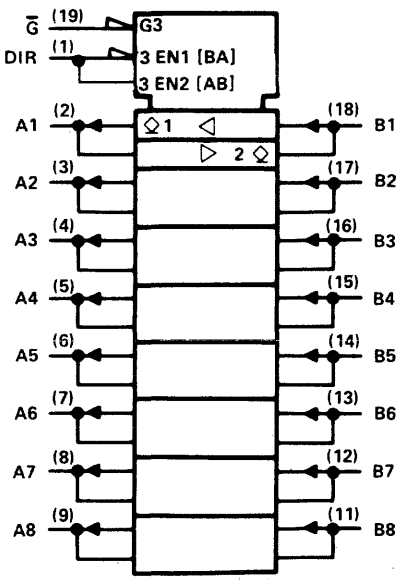

†Pin numbers shown on logic symbols are for J and N packages only.
nc — no internal connection.

Copyright © 1983 by Texas Instruments Incorporated.

1640A, 1641, 1642, 1643, 1644, 1645 continued

logic symbol, 'ALS1642†

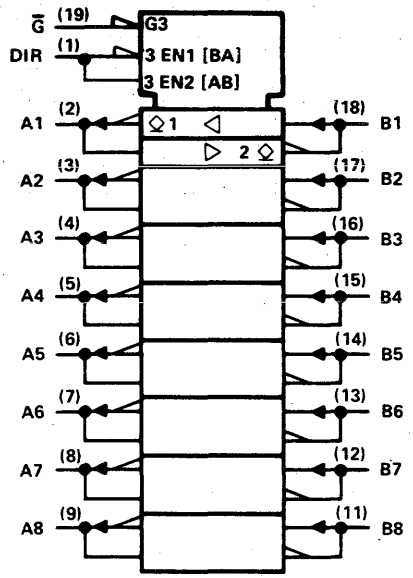

logic symbol, 'ALS1643†

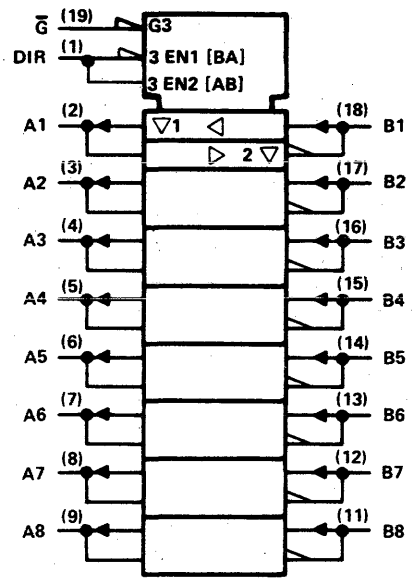

logic symbol, 'ALS1644†

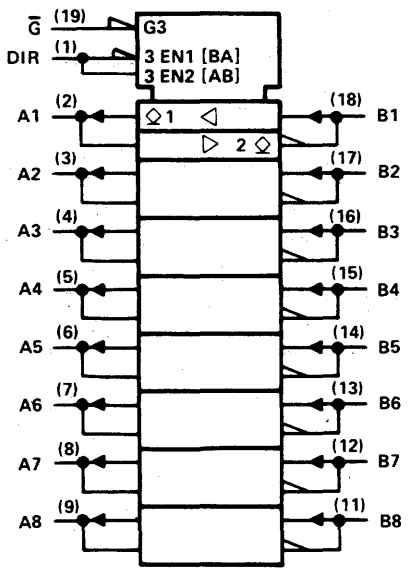

logic symbol, 'ALS1645†

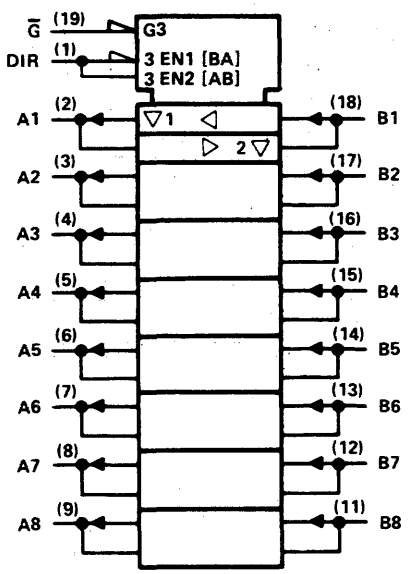

†Pin numbers shown on logic symbols are for J and N packages only.

Copyright © 1983 by Texas Instruments Incorporated.

2620, 2623

OCTAL BUS TRANSCEIVERS/MOS DRIVERS

- Bidirectional bus transceivers for driving MOS devices
- Local bus latch capability
- I/O ports have 25 ohm series resistors so no external resistors are required
- Choice of True or Inverting logic
- 3-State outputs

typical performance

TYPE	MAX SOURCE CURRENT	MAX SINK CURRENT
SN54AS2620	– 12 mA	48 mA
SN74AS2620	– 15 mA	64 mA
SN54AS2623	– 12 mA	48 mA
SN74AS2623	– 15 mA	64 mA

SN54AS2620 (J,FH) SN74AS2620 (N,FN)
SN54AS2623 (J,FH) SN74AS2623 (N,FN)

pin assignments

J,N PACKAGES				FH,FN PACKAGES			
1	GAB	11	B8	1	GAB	11	B8
2	A1	12	B7	2	A1	12	B7
3	A2	13	B6	3	A2	13	B6
4	A3	14	B5	4	A3	14	B5
5	A4	15	B4	5	A4	15	B4
6	A5	16	B3	6	A5	16	B3
7	A6	17	B2	7	A6	17	B2
8	A7	18	B1	8	A7	18	B1
9	A8	19	$\overline{G}$BA	9	A8	19	$\overline{G}$BA
10	GND	20	V_{CC}	10	GND	20	V_{CC}

logic symbol† 'AS2620

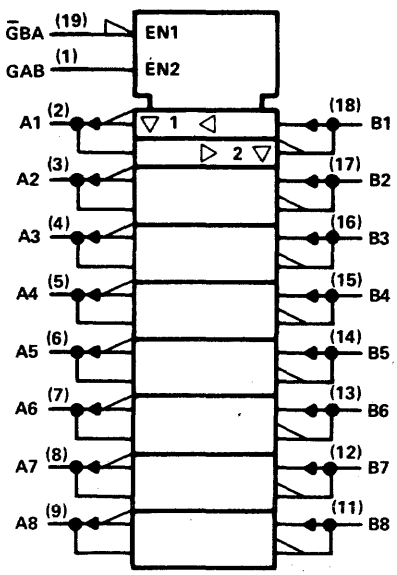

logic symbol† AS2623

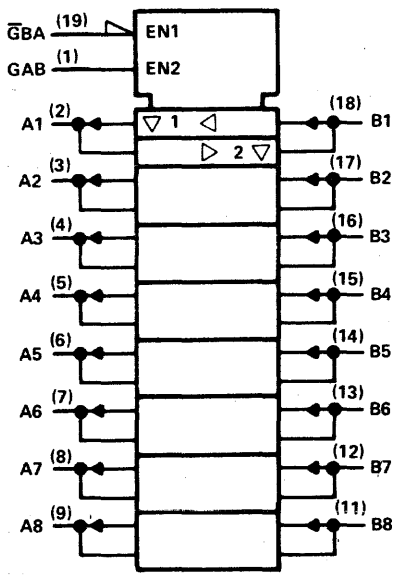

† Pin numbers shown on logic symbols are for J and N packages only.

Copyright © 1983 by Texas Instruments Incorporated.

2640, 2643, 2645

OCTAL BUS TRANSCEIVERS/MOS DRIVERS

- Bidirectional octal bus transceivers for driving MOS devices
- I/O ports have 25 ohm series resistors so no external resistors are required
- Choice of true or inverting logic
- 3-state outputs

typical performance

TYPE	MAX SOURCE CURRENT	MAX SINK CURRENT
SN54AS2640	– 12 mA	48 mA
SN74AS2640	– 15 mA	64 mA
SN54AS2643	– 12 mA	48 mA
SN74AS2643	– 15 mA	64 mA
SN54AS2645	– 12 mA	48 mA
SN74AS2645	– 15 mA	64 mA

SN54AS2640 (J,FH) SN74AS2640 (N,FN)
SN54AS2643 (J,FH) SN74AS2643 (N,FN)
SN54AS2645 (J,FH) SN74AS2645 (N,FN)

pin assignments

J,N PACKAGES			
1	DIR	11	B8
2	A1	12	B7
3	A2	13	B6
4	A3	14	B5
5	A4	15	B4
6	A5	16	B3
7	A6	17	B2
8	A7	18	B1
9	A8	19	$\overline{G}$
10	GND	20	V_{CC}

FH,FN PACKAGES			
1	DIR	11	B8
2	A1	12	B7
3	A2	13	B6
4	A3	14	B5
5	A4	15	B4
6	A5	16	B3
7	A6	17	B2
8	A7	18	B1
9	A8	19	$\overline{G}$
10	GND	20	V_{CC}

logic symbol† 'AS2640

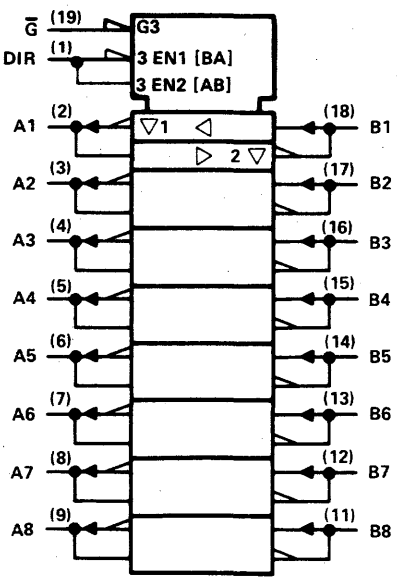

logic symbol† 'AS2643

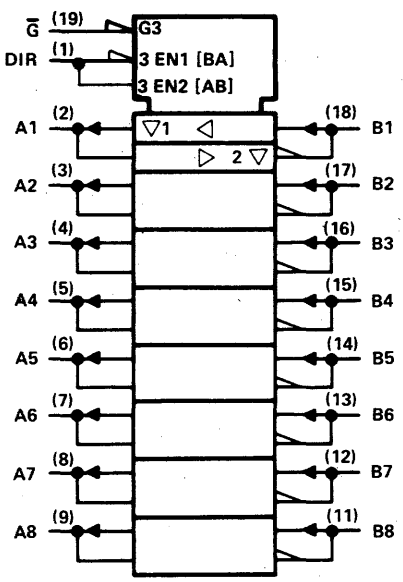

logic symbol† 'AS2645

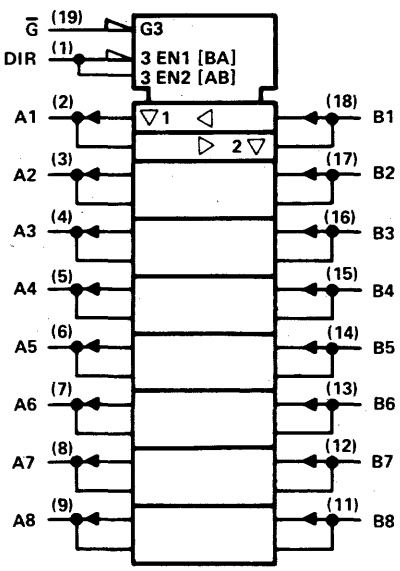

† Pin numbers shown on logic symbols are for J and N packages only.

For information on Texas Instruments Bipolar User Programmable products, see Programmable Logic Arrays in the Custom/Semi-Custom section and Bipolar PROMs in the Memory section.

Copyright © 1983 by Texas Instruments Incorporated.

8003

DUAL 2-INPUT POSITIVE-NAND GATE

- Dual version of 'ALS00

SN54ALS8003 (JG,FH) SN74ALS8003 (P,FN)

logic symbol†

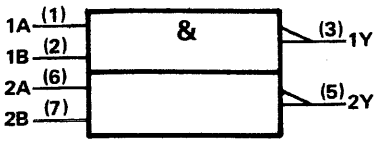

pin assignments

JG,P PACKAGE	
1	1A
2	1B
3	1Y
4	GND
5	2Y
6	2A
7	2B
8	V_{CC}

FH,FN PACKAGE			
1	nc	11	nc
2	1A	12	2Y
3	nc	13	nc
4	nc	14	nc
5	1B	15	2A
6	nc	16	nc
7	1Y	17	2B
8	nc	18	nc
9	nc	19	nc
10	GND	20	V_{CC}

† Pin numbers shown on logic symbols are for JG and P packages only.

For information on Texas Instruments Bipolar User Programmable Products, see Programmable Logic Arrays in the Custom/Semi-Custom section and Bipolar PROMs in the Memory section.

Copyright © 1983 by Texas Instruments Incorporated.

TEXAS INSTRUMENTS
POST OFFICE BOX 225012 • DALLAS, TEXAS 75265

© IC MASTER 1984

TYPES SN54AS888, SN54AS889, SN74AS888, SN74AS889 8-BIT PROCESSOR SLICES

NOVEMBER 1982

- STL-AS technology
- Parallel 8-bit ALU with expansion input and outputs
- 13 arithmetic and logic functions
- 8 conditional shifts (single and double length)
- 9 instructions that manipulate bytes
- 4 instructions that manipulate bits
- Add and subtract immediate instructions
- Absolute value instruction
- Signed magnitude to/from 2's complement conversion
- Polynomial code accumulation (CRC, FIRE, Computer Generated, etc.)
- Single- and double-length normalize
- Select functions
- Signed and unsigned divides with overflow detection; input does not need to be prescaled.
- Signed, mixed, and unsigned multiplies
- Three-operand, 16-word register file
- Full carry look ahead support
- Sign, carry out, overflow, and zero-detect status capabilities
- Excess-3 BCD arithmetic.
- Internal shift multiplexers that eliminate the need for external shift control parts.
- An ALU bypass path to increase the speeds of multiply, divide, and normalize instructions and to provide new instructions such as Bit Set, Bit Reset, Bit Test, Byte Subtract, Byte Add, and Byte Logical.
- 3-operand register files to allow an operation and a move instruction to be combined.
- Byte select controlled by external 3-state buffers that may be eliminated if bit and byte manipulation are not needed.
- Bit and byte masks that are shared with register address fields to minimize control store word width.
- 3 data input/output paths maximize data throughput.

introduction

These 8-bit Advanced Schottky TTL integrated circuits are designed to implement high performance digital computers or controllers. An architecture and instruction set has been chosen that supports a fast system clock, a narrow microcode word width, and a high system throughput. The powerful instruction set allows high-speed system architecture to be implemented and also allows an existing systems performance to be upgraded while protecting software investments. These processors are designed to be cascadable to any word width 16 bits or greater.

The SN54AS888 and SN54AS889 are characterized for operation over the full military temperature range of −55°C to 125°C. The SN74AS888 and SN74AS889 are characterized for operation from 0°C to 70°C.

PRODUCT PREVIEW

This document contains information on a product under development. Texas Instruments reserves the right to change or discontinue this product without notice.

TEXAS INSTRUMENTS
POST OFFICE BOX 225012 • DALLAS, TEXAS 75265

© IC MASTER 1984

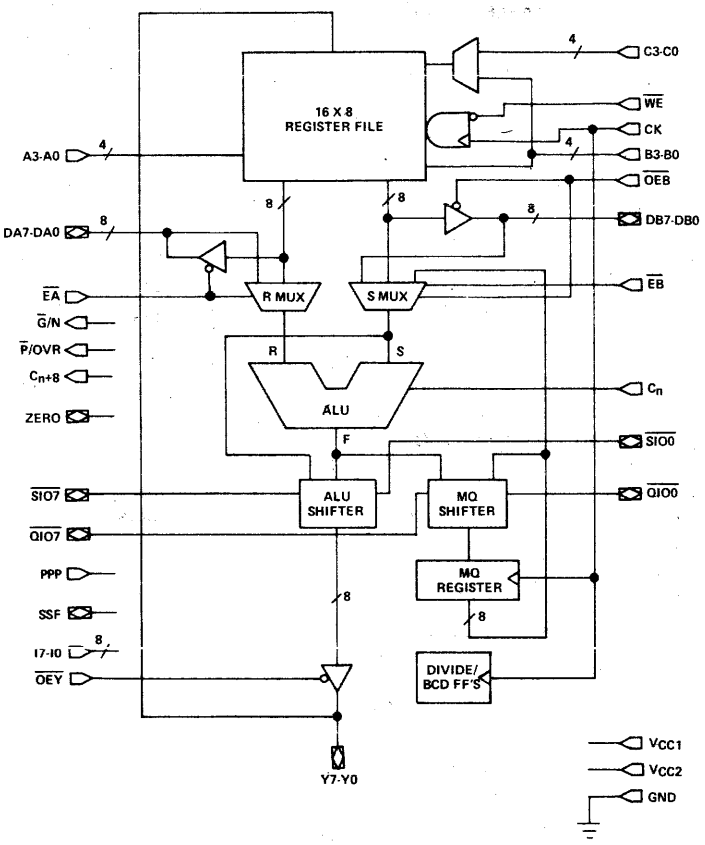

FUNCTIONAL BLOCK DIAGRAM FOR 'AS888

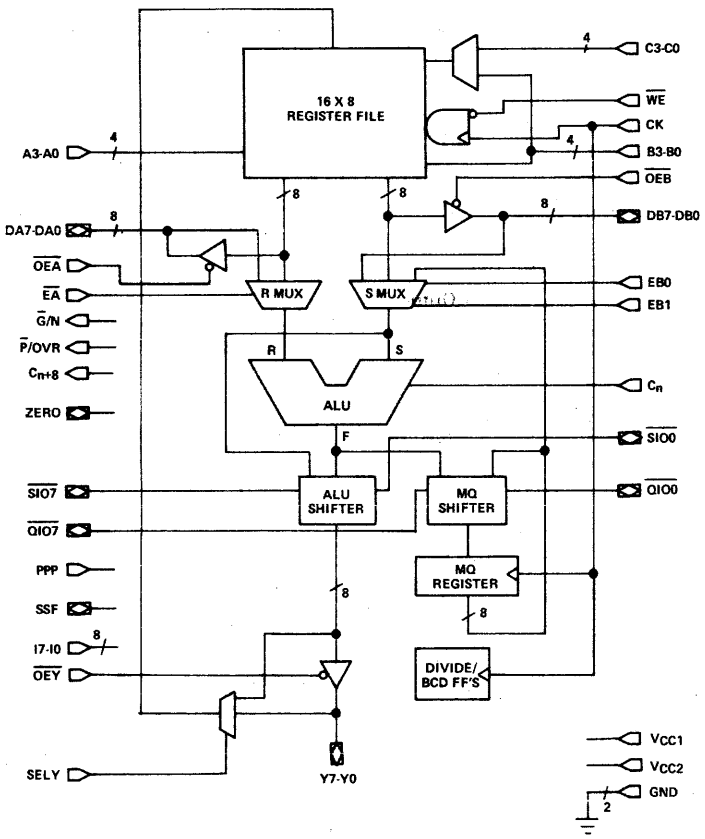

FUNCTIONAL BLOCK DIAGRAM FOR 'AS889

Copyright © 1983 by Texas Instruments Incorporated.

TABLE 1 – 'AS888 PIN DESCRIPTIONS

PIN NUMBER(S)	NAME	INPUT/OUTPUT	DESCRIPTION
1	$\overline{WE}$	Input	Register file (RF) write enable. Data is written into RF when $\overline{WE}$ is low and a low-to-high clock transition occurs. RF write is inhibited when $\overline{WE}$ is high.
2-5	B3-B0	Input	Register file B port read address select. (0 = LSB)
6	$\overline{EB}$	Input	ALU input operand select. High state selects MQ register as input. Low state selects either register file ($\overline{OEB}=0$) or external data ($\overline{OEB}=1$) as input.
7	$\overline{OEB}$	Input	DB bus enable, low active.
8-15	DB7-DB0	Input/Output	B port data bus. Outputs register data ($\overline{OEB}=0$) or used to input external data ($\overline{OEB}=1$). (0 = LSB)
16-23	Y7-Y0	Input/Output	Y port data bus. Outputs instruction results ($\overline{OEY}=0$) or used to input external data into register file ($\overline{OEY}=1$).
24	$\overline{OEY}$	Input	Y bus output enable, low active.
25	PPP	Input	Package position pin. Tri-level input used to define package significance during instruction execution. Leave open for intermediate positions, tie to V_{CC} for most significant package, and tie to GND for least significant package.
26	SSF	Input/Output	Special shift function. Used to transfer required information between packages during special instruction execution.
27	ZERO	Input/Output	Device zero detection, open collector. Input during certain special instructions.
28	$\overline{P}$/OVR	Output	ALU active low propagate/instruction overflow for most significant package.
29	$\overline{G}$/N	Output	ALU active low generate/negative result for most significant package.
30	C_{n+8}	Output	ALU ripple carry output.
31	$\overline{SIO7}$	Input/Output	Bidirectional shift pin, low active.
32	$\overline{QIO7}$	Input/Output	Bidirectional shift pin, low active.
33	$\overline{QIO0}$	Input/Output	Bidirectional shift pin, low active.
34	$\overline{SIO0}$	Input/Output	Bidirectional shift pin, low active.
35	C_n	Input	ALU carry input.
36-43	I0-I7	Input	Instruction inputs.
44	V_{CC2}		Low voltage power supply (2 V).
45	V_{CC1}		I/O interface supply voltage (5 V).
46	$\overline{EA}$	Input	ALU input operand select. High state selects external DA bus and low state selects register file.
47	GND		Ground pin.
48-55	DA0-DA7	Input/Output	A port data bus. Outputs register file data ($\overline{EA}=0$) or inputs external data ($\overline{EA}=1$).
56	CK	Input	Clocks all synchronous registers on positive edge.

Copyright © 1983 by Texas Instruments Incorporated.

TABLE 1 – 'AS888 PIN DESCRIPTIONS (Continued)

PIN NUMBER(S)	NAME	INPUT/OUTPUT	DESCRIPTION
57-60	C3-C0	Input	Register file write address select.
61-64	A3-A0	Input	Register file A port read address select.

TABLE 2 – 'AS889 PIN DESCRIPTIONS

PIN NUMBER(S)	NAME	INPUT/OUTPUT	DESCRIPTION
1	$\overline{WE}$	Input	Register file (RF) write enable. Data is written into RF when $\overline{WE}$ is low and a low-to-high clock transition occurs. RF write is inhibited when $\overline{WE}$ is high.
2-5	B3-B0	Input	Register file B port read address select. (0 = LSB)
7	$\overline{OEB}$	Input	DB bus enable, low active.
9-16	DB7-DB0	Input/Output	B port data bus. Outputs register data ($\overline{OEB}=0$) or used to input external data ($\overline{OEB}=1$). (0 = LSB)
18-25	Y7-Y0	Input/Output	Y port data bus. Outputs instruction results ($\overline{OEY}=0$) or used to input external data into register file ($\overline{OEY}=1$).
26	$\overline{OEY}$	Input	Y bus output enable, low active.
27	PPP	Input	Package position pin. Tri-level input used to define package significance during instruction execution. Leave open for intermediate positions, tie to V_{CC} for most significant package, and tie to GND for least significant package.
28	SSF	Input/Output	Special shift function. Used to transfer required information between packages during special instruction execution.
29	ZERO	Input/Output	Device zero detection, open collector. Input during certain special instructions.
30	$\overline{P}$/OVR	Output	ALU active low propagate/instruction overflow for most significant package.
31	$\overline{G}$/N	Output	ALU active low generate/negative result for most significant package.
32	C_{n+8}	Output	ALU ripple carry output.
33	$\overline{SIO7}$	Input/Output	Bidirectional shift pin, low active.
34	$\overline{QIO7}$	Input/Output	Bidirectional shift pin, low active.
35	$\overline{QIO0}$	Input/Output	Bidirectional shift pin, low active.
36	$\overline{SIO0}$	Input/Output	Bidirectional shift pin, low active.
37	C_n	Input	ALU carry input.
38-42,44-46	I0-I7	Input	Instruction inputs.
48	V_{CC2}		Low voltage power supply (2 V).
49	V_{CC1}		I/O interface supply voltage (5 V).
51	$\overline{EA}$	Input	ALU input operand select. High state selects external DA bus and low state selects register file.

Copyright © 1983 by Texas Instruments Incorporated.

TABLE 2 – 'AS889 PIN DESCRIPTIONS (Continued)

PIN NUMBER(S)	NAME	INPUT/OUTPUT	DESCRIPTION
47	GND		Ground pin.
52-59	DA0-DA7	Input/Output	A port data bus. Outputs register file data ($\overline{EA}$ = 0) or inputs external data ($\overline{EA}$ = 1).
60	CK	Input	Clocks all synchronous registers on positive edge.
64-61	C3-C0	Input	Register file write address select.
68-65	A3-A0	Input	Register file A port read address select.
50	$\overline{OEA}$	Input	DA bus enable, low active.
17	SELY	Input	Y bus select, high active.
6,8	EB0, EB1	Input	ALU input operand selects. These inputs select the source of data that the S multiplexer provides for the S bus. Independent control of the DB bus and data path selection allow the user to isolate the DB bus while the R-ALU continues to process data.
43	GND		Ground pin.

SN54AS888, SN74AS888 . . . JD PACKAGE
(TOP VIEW)

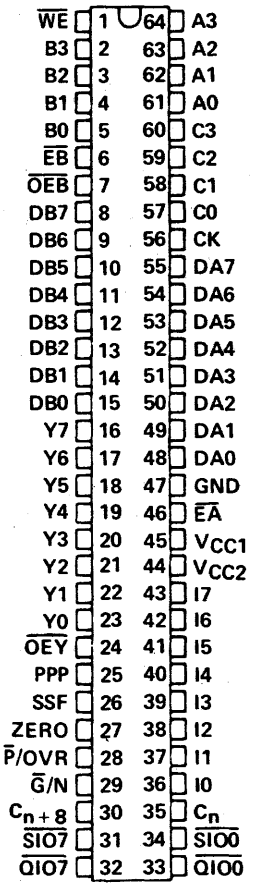

FIGURE 1 – 'AS888 PIN ASSIGNMENTS

SN54AS889, SN74AS889 . . . FN PACKAGE
(TOP VIEW)

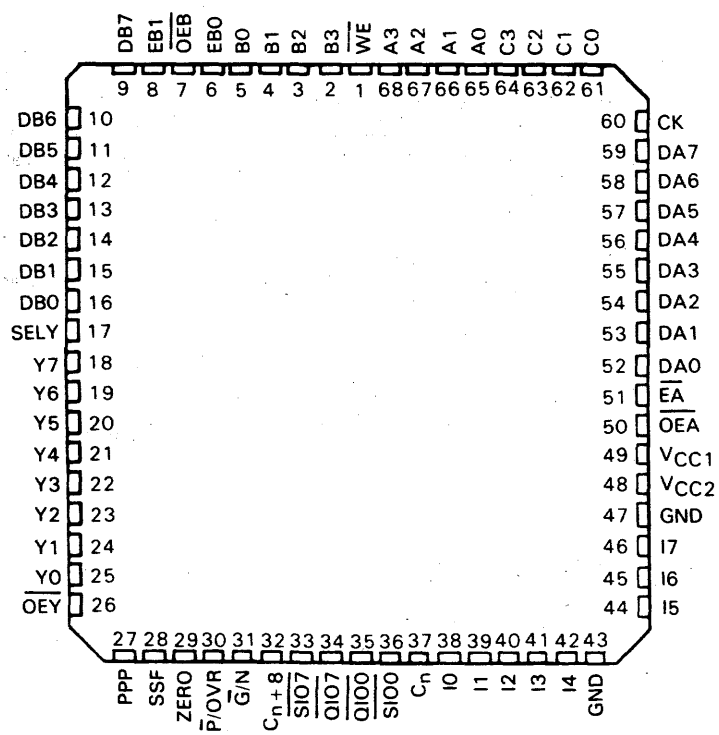

FIGURE 2 – 'AS889 PIN ASIGNMENTS

Copyright © 1983 by Texas Instruments Incorporated.

ARCHITECTURAL ELEMENTS

3-PORT REGISTER FILE

Working registers consist of 128 storage elements organized into sixteen 8-bit words. These storage elements appear to the user as sixteen positive edge-triggered registers. The three port addresses, one write (C), and two reads (A and B), are completely independent of each other to implement a 3-operand register file. Data is written into the register file when $\overline{WE}$ is low and a low-to-high clock transition occurs. The ADD and SUBTRACT immediate instructions require only one source operand. The B address is used as the source address, and the bits of the A address are used to provide a constant field. The SET, RESET, and TEST BIT instructions use the B addressed register as both the source and destination register while the A and C address are used as masks. These instructions are explained in more detail in the instruction section.

S MULTIPLEXER

The shift instructions are summarized in Table 6 and illustrated in Figure 4. In Figure 4 and all succeeding figures that illustrate instruction execution the following definitions apply.

$\overline{OEB}$	$\overline{EB}$	S bus
Low	Low	RF data (RF data → DB)
Low	High	MQ data (RF data → DB)
High	Low	DB data (DB forced externally)
High	High	MQ data (DB is HI-Z)

The 'AS889 operates as follows:

EB1	EB0	S bus
Low	Low	RF data
Low	High	MQ data
High	Low	DB data
High	High	MQ data

DB PORT

Data is passed through the ALU or received from the register file on the 8-bit DB port. If $\overline{OEB}$ is low, the DB bus is active; if $\overline{OEB}$ is high, the DB bus is in the high impedance state. Notice that on the 'AS889 the DB port may be isolated at the same time that register file data is passed to the ALU.

R MULTIPLEXER

The R multiplexer selects the other operand of the ALU. Except for those instructions that require constants or masks, the R bus will contain DA if $\overline{EA}$ is high or the RF data pointed to by A if $\overline{EA}$ is low.

DA BUS

On the 'AS888, the DA bus is active (with register file data) if $\overline{EA}$ is low. On the 'AS889 package, the DA bus is active if $\overline{OEA}$ is low. Notice that the DA bus may be isolated on the 'AS889 while register file data is passed to the ALU.

ALU

The ALU can perform seven arithmetic and six logical instructions on two 8-bit operands. It also supports multiplication, division, normalization, bit set, reset, and test, byte operations, and excess-3 BCD arithmetic. These source operands are the outputs of the S and R multiplexers

ALU AND MQ SHIFTERS

ALU and MQ shifters perform all of the shift, multiply, divide, and normalize functions. Table 6 shows the value of the $\overline{SIO7}$ and $\overline{QIO7}$ pins of the most-significant package. The standard shifts may be made into conditional shifts and the serial data may be input or output with the aid of two three-state gates. These capabilities are discussed further in the arithmetic and logic section.

Copyright © 1983 by Texas Instruments Incorporated.

MQ REGISTER

The multiplier-quotient (MQ) register has specific functions in multiplication, division, and normalization. This register may also be used as a temporary storage register. The MQ register may be loaded if the instruction code on pins I7-I0 is E1-E7 or E9-EE.

Y BUS

The Y bus contains the output of the ALU shifter if $\overline{OEY}$ is low, and is a high impedance input if $\overline{OEY}$ is high. On the 'AS888 , $\overline{OEY}$ must be low to pass the ALU shift result back to the register file. The 'AS889 will pass the internal ALU shift bus if SELY is low and pass the external Y bus to the register file if SELY is high.

STATUS

Four status pins are available on the most significant package, OVERFLOW (OVR), SIGN (N), CARRY OUT (C_{n+8}), and ZERO. The C_{n+8} line signifies the ALU result while the OVR, Z, and N refer the status after the ALU shift has occured. Notice that the Z pin cannot be used to detect whether an input placed on a high impedance Y bus is zero.

DIVIDE/BCD FLIP-FLOPS

The multiply-divide flip-flops contain the status of the previous multiply or divide instruction. They are affected by the following structions:

DIVIDE REMAINDER FIX
SIGNED DIVIDE QUOTIENT FIX
SIGNED MULTIPLY
SIGNED MULTIPLY TERMINATE
SIGNED DIVIDE INITIALIZE
SIGNED DIVIDE START
SIGNED DIVIDE ITERATE
UNSIGNED DIVIDE START
UNSIGNED DIVIDE ITERATE
UNSIGNED MULTIPLY
SIGNED DIVIDE TERMINATE
UNSIGNED DIVIDE TERMINATE

The excess-3 BCD flip-flops are affected by all instructions except NOP. The clear function clears these flip-flops. They preserve the carry from each nibble (4-bits) in excess – 3/BCD operations.

PACKAGE POSITION PIN (PPP)

The position of the processor in the system is defined by the voltage level apply to the package position pin (PPP). Intermediate positions are selected by leaving the pin open. Tying the pin to V_{CC} makes the processor the most significant package and tying the pin to GND makes the processor the least significant package.

SPECIAL SHIFT FUNCTION (SSF) PIN

Conditional shifting algorithms may be implemented via control of the SSF pin. The applied voltage to this pin may be set as a function of a potential overflow condition (the two most significant bits are not equal) or any other condition.

Copyright © 1983 by Texas Instruments Incorporated.

'AS888 AND 'AS889 INSTRUCTION SET

The 'AS888 and 'AS889 bit-slice processors use bits I7-I0 as instruction inputs. A combination of bits I3-I0 (Group 1 instructions) and bits I7-I4 (Group 2-5 instructions) are used to develop the 8-bit op-code for a specific instruction. A summary of the instruction set is given in Table 3.

TABLE 3 – 'AS888 AND 'AS889 INSTRUCTION SET

GROUP 1 INSTRUCTIONS		
INSTRUCTION BITS (I3-I0) HEX CODE	MNEMONIC	FUNCTION
0		Special (see Note 1)
1	ADD	$R+S+C_n$ (see Note 2)
2	SUBR	$\overline{R}+S+C_n$ (see Note 2)
3	SUBS	$R+\overline{S}+C_n$ (see Note 2)
4	INCS	$S+C_n$ (see Note 2)
5	INCNS	$\overline{S}+C_n$ (see Note 2)
6	INCR	$R+C_n$ (see Note 2)
7	INCNR	$\overline{R}+C_n$ (see Note 2)
8		Special (see Note 3)
9	XOR	R XOR S (see Note 2)
A	AND	R AND S (see Note 2)
B	OR	R OR S (see Note 2)
C	NAND	R NAND S (see Note 2)
D	NOR	R NOR S (see Note 2)
E	ANDNR	$\overline{R}$ AND S (see Note 2)
F		Special (see Note 4)
GROUP 2 INSTRUCTIONS		
INSTRUCTION BITS (I7-I4) HEX CODE	MNEMONIC	FUNCTION
0	SRA	Arithmetic Right Single
1	SRAD	Arithmetic Right Double
2	SRL	Logical Right Single
3	SRLD	Logical Right Double
4	SLA	Arithmetic Left Single
5	SLAD	Arithmetic Left Double
6	SLC	Circular Left Single
7	SLCD	Circular Left Double
8	SRC	Circular Right Single
9	SRCD	Circular Right Double
A	MQSRA	Pass (F→Y) and Arithmetic Right MQ
B	MQSRL	Pass (F→Y) and Logical Right MQ
C	MQSLL	Pass (F→Y) and Logical Left MQ
D	MQSLC	Pass (F→Y) and Circular Left MQ
E	LOADMQ	Pass (F→Y) and Load MQ (F=MQ)
F	PASS	Pass (F→Y)

NOTES:
1. Hex code 0 used to access Group 4 instructions.
2. Hex codes 1-7 and 9-E are used in conjunction with Group 2 shift instructions to perform arithmetic or logical functions plus a shift function in one instruction cycle.
3. Hex code 8 used to access Group 3 instructions.
4. Hex code F used to access Group 5 instructions.

Copyright © 1983 by Texas Instruments Incorporated.

MQ REGISTER

The multiplier-quotient (MQ) register has specific functions in multiplication, division, and normalization. This register may also be used as a temporary storage register. The MQ register may be loaded if the instruction code on pins I7-I0 is E1-E7 or E9-EE.

Y BUS

The Y bus contains the output of the ALU shifter if $\overline{OEY}$ is low, and is a high impedance input if $\overline{OEY}$ is high. On the 'AS888 , $\overline{OEY}$ must be low to pass the ALU shift result back to the register file. The 'AS889 will pass the internal ALU shift bus if SELY is low and pass the external Y bus to the register file if SELY is high.

STATUS

Four status pins are available on the most significant package, OVERFLOW (OVR), SIGN (N), CARRY OUT (C_{n+8}), and ZERO. The C_{n+8} line signifies the ALU result while the OVR, Z, and N refer the status after the ALU shift has occured. Notice that the Z pin cannot be used to detect whether an input placed on a high impedance Y bus is zero.

DIVIDE/BCD FLIP-FLOPS

The multiply-divide flip-flops contain the status of the previous multiply or divide instruction. They are affected by the following structions:

DIVIDE REMAINDER FIX
SIGNED DIVIDE QUOTIENT FIX
SIGNED MULTIPLY
SIGNED MULTIPLY TERMINATE
SIGNED DIVIDE INITIALIZE
SIGNED DIVIDE START
SIGNED DIVIDE ITERATE
UNSIGNED DIVIDE START
UNSIGNED DIVIDE ITERATE
UNSIGNED MULTIPLY
SIGNED DIVIDE TERMINATE
UNSIGNED DIVIDE TERMINATE

The excess-3 BCD flip-flops are affected by all instructions except NOP. The clear function clears these flip-flops. They preserve the carry from each nibble (4-bits) in excess – 3/BCD operations.

PACKAGE POSITION PIN (PPP)

The position of the processor in the system is defined by the voltage level apply to the package position pin (PPP). Intermediate positions are selected by leaving the pin open. Tying the pin to V_{CC} makes the processor the most significant package and tying the pin to GND makes the processor the least significant package.

SPECIAL SHIFT FUNCTION (SSF) PIN

Conditional shifting algorithms may be implemented via control of the SSF pin. The applied voltage to this pin may be set as a function of a potential overflow condition (the two most significant bits are not equal) or any other condition.

Copyright © 1983 by Texas Instruments Incorporated.

'AS888 AND 'AS889 INSTRUCTION SET

The 'AS888 and 'AS889 bit-slice processors use bits I7-I0 as instruction inputs. A combination of bits I3-I0 (Group 1 instructions) and bits I7-I4 (Group 2-5 instructions) are used to develop the 8-bit op-code for a specific instruction. A summary of the instruction set is given in Table 3.

TABLE 3 – 'AS888 AND 'AS889 INSTRUCTION SET

GROUP 1 INSTRUCTIONS		
INSTRUCTION BITS (I3-I0) HEX CODE	MNEMONIC	FUNCTION
0		Special (see Note 1)
1	ADD	$R+S+C_n$ (see Note 2)
2	SUBR	$\overline{R}+S+C_n$ (see Note 2)
3	SUBS	$R+\overline{S}+C_n$ (see Note 2)
4	INCS	$S+C_n$ (see Note 2)
5	INCNS	$\overline{S}+C_n$ (see Note 2)
6	INCR	$R+C_n$ (see Note 2)
7	INCNR	$\overline{R}+C_n$ (see Note 2)
8		Special (see Note 3)
9	XOR	R XOR S (see Note 2)
A	AND	R AND S (see Note 2)
B	OR	R OR S (see Note 2)
C	NAND	R NAND S (see Note 2)
D	NOR	R NOR S (see Note 2)
E	ANDNR	$\overline{R}$ AND S (see Note 2)
F		Special (see Note 4)
GROUP 2 INSTRUCTIONS		
INSTRUCTION BITS (I7-I4) HEX CODE	MNEMONIC	FUNCTION
0	SRA	Arithmetic Right Single
1	SRAD	Arithmetic Right Double
2	SRL	Logical Right Single
3	SRLD	Logical Right Double
4	SLA	Arithmetic Left Single
5	SLAD	Arithmetic Left Double
6	SLC	Circular Left Single
7	SLCD	Circular Left Double
8	SRC	Circular Right Single
9	SRCD	Circular Right Double
A	MQSRA	Pass (F→Y) and Arithmetic Right MQ
B	MQSRL	Pass (F→Y) and Logical Right MQ
C	MQSLL	Pass (F→Y) and Logical Left MQ
D	MQSLC	Pass (F→Y) and Circular Left MQ
E	LOADMQ	Pass (F→Y) and Load MQ (F=MQ)
F	PASS	Pass (F→Y)

NOTES:
1. Hex code 0 used to access Group 4 instructions.
2. Hex codes 1-7 and 9-E are used in conjunction with Group 2 shift instructions to perform arithmetic or logical functions plus a shift function in one instruction cycle.
3. Hex code 8 used to access Group 3 instructions.
4. Hex code F used to access Group 5 instructions.

Copyright © 1983 by Texas Instruments Incorporated.

TABLE 3 – 'AS888 and 'AS889 INSTRUCTION SET (Continued)

GROUP 3 INSTRUCTIONS		
INSTRUCTION BITS (I7-I4) HEX CODE	MNEMONIC	FUNCTION
0	SET1	Set Bit
1	SET0	Reset Bit
2	TB1	Test Bit (ONE)
3	TB0	Test Bit (ZERO)
4	ABS	Absolute Value
5	SMTC	Sign Magnitude/Two's Complement
6	ADDI	Add Immediate
7	SUBI	Subtract Immediate
8	BADD	Byte Add R to S
9	BSUBS	Byte Subtract S from R
A	BSUBR	Byte Subtract R from S
B	BINCS	Byte Increment S
C	BINCNS	Byte Increment Negative S
D	BXOR	Byte XOR R and S
E	BAND	Byte AND R and S
F	BOR	Byte OR R and S
GROUP 4 INSTRUCTIONS		
INSTRUCTION BITS (I7-I4) HEX CODE	MNEMONIC	FUNCTION
0	CRC	Cyclic Redundancy Character Accumulation
1	SEL	Select S/R
2	SNORM	Single Length Normalize
3	DNORM	Double Length Normalize
4	DIVRF	Divide Remainder FIX
5	SDIVQF	Signed Divide Quotient FIX
6	SMULI	Signed Multiply Iterate
7	SMULT	Signed Multiply Terminate
8	SDIVIN	Signed Divide Initialize
9	SDIVIS	Signed Divide Start
A	SDIVI	Signed Divide Iterate
B	UDIVIS	Unsigned Divide Start
C	UDIVI	Unsigned Divide Iterate
D	UMULI	Unsigned Multiply Iterate
E	SDIVIT	Signed Divide Terminate
F	UDIVIT	Unsigned Divide Terminate
GROUP 5 INSTRUCTIONS		
INSTRUCTION BITS (I7-I4) HEX CODE	MNEMONIC	FUNCTION
0	CLR	Clear
1	CLR	Clear
2	CLR	Clear
3	CLR	Clear
4	CLR	Clear
5	CLR	Clear
6	CLR	Clear
7	BCDBIN	BCD to Binary
8	EX3BC	Excess-3 Byte Correction
9	EX3C	Excess-3 Word Correction
A	CLR	Clear
B	CLR	Clear
C	CLR	Clear
D	BINEX3	Binary to Excess-3
E	CLR	Clear
F	NOP	No Operation

Copyright © 1983 by Texas Instruments Incorporated.

ELECTRICAL CHARACTERISTICS

ABSOLUTE MAXIMUM RATING OVER OPERATING FREE-AIR TEMPERATURE RANGE (UNLESS OTHERWISE NOTED)

Supply voltage, V_{CC1} . . . . . 7 V
Supply voltage, V_{CC2} . . . . . 3 V
Input voltage . . . . . 7 V
High-level voltage applied to 3-state outputs . . . . . 5.5 V
Operating free-air temperature range: SN54AS' . . . . . −55 °C to 125 °C
SN74AS' . . . . . 0 °C to 70 °C
Storage temperature range . . . . . −65 °C to 150 °C

RECOMMENDED OPERATING CONDITIONS

			SN54AS'			SN74AS'			UNIT
			MIN	NOM	MAX	MIN	NOM	MAX	
V_{CC1}	I/O supply voltage		4.5	5	5.5	4.5	5	5.5	V
V_{CC2}	STL internal logic supply voltage		1.8	2	2.2	1.8	2	2.2	V
V_{IH}	High-level input voltage		2			2			V
V_{IL}	Low-level input voltage				0.8			0.8	V
I_{OH}	High-level output current				−1			−1	mA
								−2.6†	
I_{OL}	Low-level output current	All outputs except $\overline{G}$			8			8	mA
		$\overline{G}$			16			16	
T_A	Operating free-air temperature		−55		125	0		70	°C

† The extended limits apply only if V_{CC} is maintained between 4.75 V and 5.25 V.

Additional information on these products can be obtained from the factory as it becomes available.

DIGITAL

Texas Instruments

Copyright © 1983 by Texas Instruments Incorporated.

ELECTRICAL CHARACTERISTICS OVER RECOMMENDED OPERATING FREE-AIR TEMPERATURE RANGE (UNLESS OTHERWISE NOTED)

PARAMETER		TEST CONDITIONS		SN54AS'			SN74AS'			UNIT
				MIN	TYP†	MAX	MIN	TYP†	MAX	
V_{IK}		V_{CC1} = 4.5 V,	I_I = −18 mA			−1.2			−1.2	V
V_{OH}		V_{CC1} = 4.5 V,	I_{OH} = −1mA	2.4	3.4		2.4	3.4		V
		V_{CC1} = 4.75 V,	I_{OH} = −2.6 mA	2.4	3.4		2.4	3.4		
V_{OL}	All outputs except $\overline{G}$	V_{CC1} = 4.5 V,	I_{OL} = 8 mA			0.55			0.55	V
	$\overline{G}$	V_{CC1} = 4.5 V,	I_{OL} = 16 mA			0.55			0.55	
I_I		V_{CC1} = 5.5 V,	V_I = 7 V			100			100	μA
I_{IH}		V_{CC1} = 5.5 V,	V_I = 2.7 V			20			20	μA
I_{IL}	All inputs except $\overline{EA}$ and $\overline{OEB}$	V_{CC1} = 5.5 V,	V_I = 0.5 V			0.2			0.2	mA
	$\overline{EA}$ and $\overline{OEB}$	V_{CC1} = 5.5 V,	V_I = 0.5 V			0.4			0.4	
I_O§		V_{CC1} = 5.5 V,	V_O = 2.25 V	−30		−112	−30		−112	mA
I_{OZH}		V_{CC1} = 5.5 V,	V_O = 2.7 V			20			20	μA
I_{OZL}		V_{CC1} = 5.5 V,	V_O = 0.5 V			0.2			0.2	mA
I_{CC1}		V_{CC1} = 5.5 V	Outputs low		100			100		mA
			Outputs disabled							
I_{CC2}		V_{CC2} = 2.2 V	Outputs high							mA
			Outputs low		130			130		
			Outputs disabled							

† All typical values are at V_{CC} = 5 V, T_A = 25°C.

§ The output conditions have been chosen to produce a current that closely approximates one-half of the true short-circuit current, I_{OS}.

TYPICAL SWITCHING CHARACTERISTICS

PARAMETER	FROM (INPUT)	TO (OUTPUT)										UNIT
		Y	C_{n+8}	$\overline{G}$,$\overline{P}$	Z	N	OVR	DA	DB	QI0	SI0	
t_{pd}	A3-A0, B3-B0	40	30	28	42	44	42	18	18	42	42	ns
	DA7-DA0, DB7-DB0	28	18	16	30	32	30	–	–	30	30	
	C_n	14	8	–	16	18	12	–	–	14	14	
	$\overline{EA}$	32	22	20	34	36	34	6	–	34	34	
	$\overline{EB}$	32	22	20	34	36	34	–	6	34	34	
	I7-I0	36	26	24	38	40	38	–	–	40	40	
	$\overline{OEB}$	–	–	–	–	–	–	–	6	–	–	
	$\overline{OEY}$	6	–	–	–	–	–	–	–	–	–	
	QI0 (n) Shift	10	–	–	12	14	–	–	–	–	–	
	SI0 (n) Shift	10	–	–	12	14	–	–	–	–	–	
	CK	40	30	28	42	44	42	18	18	42	42	

Additional information on these products can be obtained from the factory as it becomes available.

Copyright © 1983 by Texas Instruments Incorporated.

REGISTER FILE WRITE SETUP AND HOLD TIMES

PARAMETER		TYP	MAX	UNIT
t_{su}	C3-C0	8		ns
	DB†	14		
	I7-I4	16		
	I3-I0	22		
	$\overline{OEY}$	7		
	Y7-Y0	4		
	$\overline{WE}$	4		
t_h	C3-C0	0		
	DB†	0		
	I7-I4	0		
	I3-I0	0		
	$\overline{OEY}$	0		
	Y7-Y0	4		
	$\overline{WE}$	2		

†DB (during select instruction) through Y port.

Additional information on these products can be obtained from the factory as it becomes available.

SPECIAL INSTRUCTION SWITCHING CHARACTERISTICS

During various special instructions, the SSF pin is used to pass required information between the 'AS888 or 'AS889 packages which make up a total system.

For instance, during the multiplication process, the LSB of the multiplier determines whether an ADD/SHIFT or SHIFT operation is performed. During multiplication, the SSF pin of the least significant package (LSP) becomes an output pin while all other packages become input pins.

Similarly, during normalization, the required operation depends on whether the two data MSB's are the same or different. Therefore, during normalization the SSF pin of the most significant package (MSP) becomes an output pin while all other packages become input pins.

The following table lists the instructions which force the SSF pin during their execution. The propagation delay from various inputs are also shown. The parameter which limits normal system performance is indicated by an asterisk.

Copyright © 1983 by Texas Instruments Incorporated.

SSF PIN DELAYS AND SETUP TIMES

MNEMONIC	HEX CODE	SSF SOURCE		INPUT→SSF (ns)				SSF SETUP TIME (ns)
		LSP	MSP	C_n	$I_{(n)}$	CK	$B_{(n)}$	
CRC	00	X		—	18	17	26*	20
SNORM	20		X	—	18*	17	—	20
DNORM	30		X	—	18	26	26*	20
DIVRF	40		X	—	18*	17	—	20
SDIVQF	50		X	—	18*	17	—	18
SMULI	60	X		—	18*	17	—	0
SDIVIN	80		X	—	36	40	44*	0
SDIVIS	90		X	16*	36	40	44	0
SDIVI	A0		X	16*	36	40	44	0
UDIVIS	B0		X	12*	28	32	36	0
UDIVI	C0		X	12*	28	32	36	0
UMULI	D0	X		—	18*	17	—	0
SDIVIT	E0		X	16*	36	40	44	0
ABS	48		X	—	18	26	26*	20
SMTC	58		X	—	18	26	26*	20
BINEX3	DF		X	—	18*	17	—	18
LOADMQ (Arith)		X		14*	36	40	44	0
LOADMQ (Log)		X		—	28	32	36*	0
BADD	88	SOURCE IS MOST SIGNIFICANT BYTE SELECTED		16*	32	36	40	10
BSUBS	98			16*	32	36	40	10
BSUBR	A8			16*	32	36	40	10
BINCS	B8			16*	32	36	40	10
BINCNS	C8			16*	32	36	40	10
BXOR	D8			—	32	36	40*	10
BAND	E8			—	32	36	40*	10
BOR	F8			—	32	36	40*	10
EX3BC	8F			—	32	36	40*	10

* This parameter limits normal system performance.

Additional information on these products can be obtained from the factory as it becomes available.

© IC MASTER 1984

TYPES SN54AS890, SN54AS891, SN74AS890, SN74AS891 MICROSEQUENCERS

D2662 NOVEMBER 1982

- 14 Bits Wide – Addresses up to 16,384 Words of Microcode with One Chip
- Selects Address from One of Eight Sources
- STL-AS Technology
- Independent Read Pointer for Aid in Microcode Diagnostics
- Supports Real-Time Interrupts
- Two Independent Loop Counters
- Supports 64 Powerful Instructions
- Available in Popular 64-Pin DIP ('AS890) and in Space-Saving 68-Pin Chip Carrier ('AS891)
- Dependable Texas Instruments Quality and Reliability

SN54AS890, SN74AS890 . . . JD PACKAGE
(TOP VIEW)

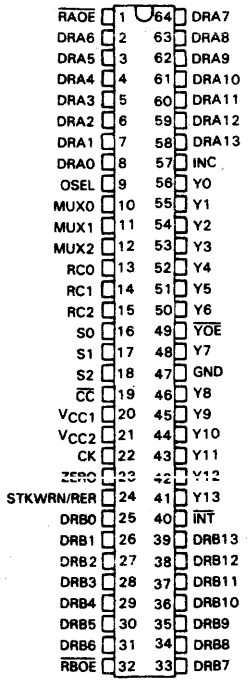

SN54AS891, SN74AS891 . . . FN PACKAGE
(TOP VIEW)

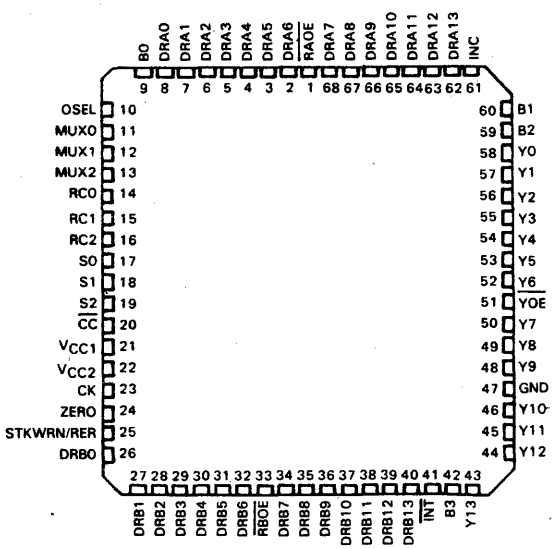

description

The 'AS890 and 'AS891 are powerful microsequencers that are the result of the implementation of TI's Advanced Schottky and Schottky Transistor Logic. Approximately 2400 Schottky gate equivalents are used to construct this high-performance sequencer. The 'AS890 or 'AS891 can generate an address and provide register status in only 26 ns (preliminary data) while typically requiring only 1.5 watts of power. All internal STL logic in these devices operates on a 2-volt power supply that must be supplied externally. The information generated by the internal STL logic is communicated to the rest of the system via 5-volt Advanced Schottky TTL-compatible I/O ports.

The 'AS890 and 'AS891 select a 14-bit microaddress from one of eight sources to provide the proper microinstruction sequence for bit-slice processor or other microcode based systems. These high-performance devices are capable of addressing 16,384 control store memory locations either sequentially or via conditional branching algorithms. This multiway branching capability, coupled with a nine-word deep FILO (first in, last out) stack, allows the microprogrammer to arrange his code in blocks so that microprograms may be structured in the same fashion as such high-level languages as ALGOL, PASCAL, or ADA.

Both polled and real-time interrupt routines are supported by the 'AS890 and 'AS891 to enhance system throughput capability. Vectored interrupts may occur during any instruction, including PUSHes and POPs.

PRODUCT PREVIEW

This document contains information on a product under development. Texas Instruments reserves the right to change or discontinue this product without notice.

Copyright © 1982 by Texas Instruments Incorporated

TEXAS INSTRUMENTS
POST OFFICE BOX 225012 • DALLAS, TEXAS 75265

© IC MASTER 1984

functional block diagram

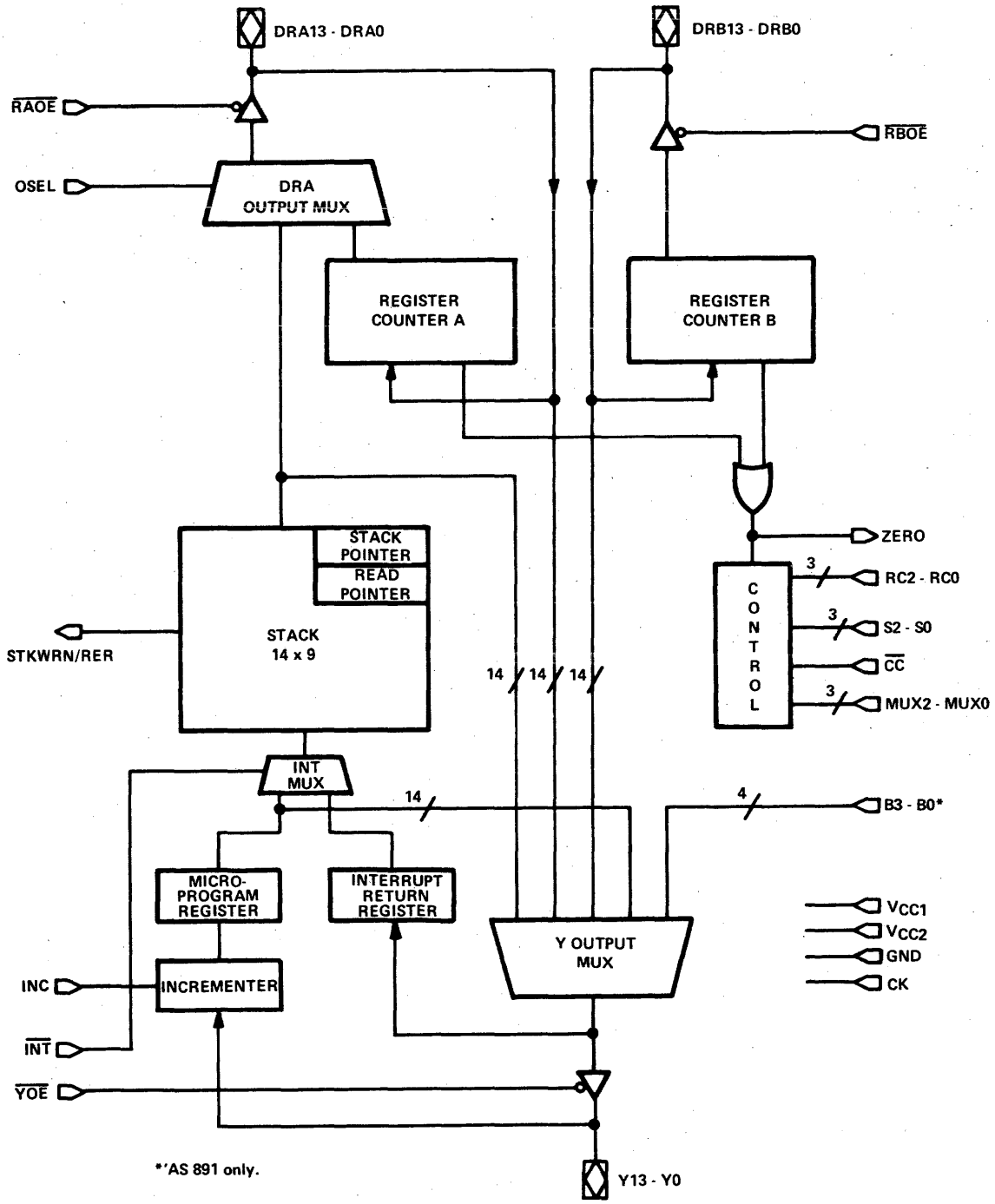

*'AS 891 only.

© IC MASTER 1984

pin descriptions

PIN NUMBER(S)		PIN NAME	I/O	PIN FUNCTION
'AS890	'AS891			
1	1	$\overline{RAOE}$	In	Enables DRA output, active low
2-8	2-8	DRA6-DRA0	In/Out	Seven LSBs of the A direct data I/O port
9	10	OSEL	In	MUX control for the source to DRA. Low selects RA, high selects stack.
10-12	11-13	MUX0-MUX2	In	MUX control for Y output bus (see Table 1)
13-15	14-16	RC0-RC2	In	Register/counter controls (see Table 3)
16-18	17-19	S0-S2	In	Stack control (see Table 2)
19	20	$\overline{CC}$	In	Condition code
20	21	V_{CC1}		5-volt supply for TTL compatible I/O
21	22	V_{CC2}		2-volt supply for internal STL
22	23	CK	In	Clock
23	24	ZERO	Out	Zero detect flag for register A and B
24	25	STKWRN/RER	Out	Stack overflow, underflow/read error flag
25-31	26-32	DRB0-DRB6	In/Out	Seven LSBs of the B direct data I/O port (0 = LSB)
32	33	$\overline{RBOE}$	In	Enables DRB output, active low
33-39	34-40	DRB7-DRB13	In/Out	Seven MSBs of the B direct data I/O port
40	41	$\overline{INT}$	In	Active low selects INT RT register to stack
41-46	43-46,48-49	Y13-Y8	In/Out	Six MSBs of bidirectional Y port
47	47	GND		Ground
48	50	Y7	In/Out	Seventh bit of bidirectional Y port
49	51	$\overline{YOE}$	In	Enables Y output bus, active low
50-56	52-58	Y6-Y0	In/Out	Seven LSBs of bidirectional Y port (0 = LSB)
57	61	INC	In	Incrementer control
58-64	62-68	DRA13-DRA7	In/Out	Seven MSBs of direct B data I/O port
	9,60,59,42	B0-B3	In	16-way branch inputs on 'AS891 only

description (continued)

Two 14-bit loadable registers/counters may be used for temporary storage of data or utilized as down counters for repetitive instructions such as multiplication and division or as loop counters when iterative routines are required.

The 'AS890 is available in a 64-pin sidebrazed DIP and the 'AS891 is available in a 68-pin chip carrier. The 68-pin version features a 4-bit port that appends four user-defineable bits to the DRA or DRB address value for support of 16-way branches for the execution of relative branch addressing schemes.

Y output multiplexer

The Y output multiplexer of the 'AS890 or 'AS891 is capable of selecting the next branch address from one of eight locations. Addresses may be sourced from:

1. The top of the 14-bit by 9-word address stack
2. An external input on the DRA port, potentially a pipeline register
3. An external input on the DRB port, potentially a pipeline register
4. Internal register/counter A
5. Internal register/counter B
6. An internal microprogram counter (MPC register)
7. An external input onto the bidirectional Y output port
8. A 16-way branch – 4-bits appended to the DRA, DRB, A counter/register or B register/counter.

The source of the next address is dependent upon the previous state of the microsequencer, the MUX controls (MUX2-MUX0), the condition code ($\overline{CC}$) input, and the state of an internal status flag (status externally available at the ZERO output) that indicates that one of the on-chip registers is being decremented to zero.

© IC MASTER 1984

The entire instruction set may be made conditional by manipulation of the condition code ($\overline{CC}$) input. Allowing the $\overline{CC}$ value to vary as a result of data or status provides for state-dependent or data-dependent branching. Unconditional branches may be achieved by forcing $\overline{CC}$ high when selecting control store addresses. Holding this pin low will provide for conditional or unconditional branches as dictated by the state of the zero-detect flag. The required control signals for selection of the Y output source are listed in Table 1. Note that the dependence of the 'AS890 and 'AS891 on two variables for conditional branches and jumps allows a conditional branch or conditional jump to subroutine in any clock cycle. Also note that all multiplexer inputs are overridden when all of the stack control inputs are pulled low. This instruction resets the stack and read pointers to zero and places all lines of the Y output bus at the low level.

TABLE 1 – Y OUTPUT CONTROL

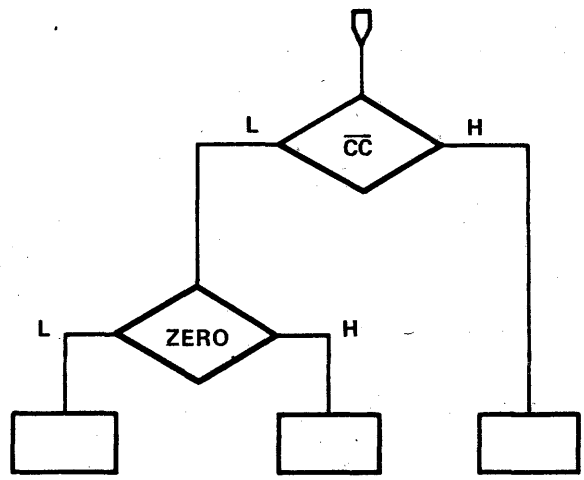

MUX CONTROL			RESET*	Y OUTPUT SOURCE		Y OUTPUT SOURCE
MUX2	MUX1	MUX0		$\overline{CC}$ = L, ZERO = L	$\overline{CC}$ = L, ZERO = H	$\overline{CC}$ = H
X	X	X	YES	ALL LOW	ALL LOW	ALL LOW
L	L	L	NO	STK	MPC	DRA
L	L	H	NO	STK	MPC	DRB
L	H	L	NO	STK	DRA	MPC
L	H	H	NO	STK	DRB	MPC
H	L	L	NO	DRA	MPC	DRB
H	L	H	NO	DRA' (16-WAY BRANCH)	MPC	DRB' (16-WAY BRANCH)
H	H	L	NO	DRA	STK	MPC
H	H	H	NO	DRB	STK	MPC

H = high level, L = low level, X = irrelevant.

* Reset command is implemented by setting S2-S0 = LLL.

© IC MASTER 1984

14-bit by 9-word address stack

The positive-edge-triggered 14-bit address stack supplies on-board storage of nine control store addresses that support up to nine nested levels of microsubroutine, looping, and real-time interrupt functions. The stack pointer (SP), which operates as an up-down counter, is updated after the execution of each PUSH operation and before each POP. In a PUSH operation, the address stored in the MPC register is loaded into the stack location addressed by the stack pointer, and the stack pointer is incremented. This address is available at the DRA port by enabling DRA ($\overline{RAOE}$ low and OSEL high).

A POP operation causes the stack pointer to be decremented on the first rising clock edge following the arrival of the POP instruction at the S2-S0 pins. The value that was indexed by the stack pointer is effectively removed from the top of the stack. All PUSH and POP instructions are conditionally dependent upon the stack control inputs (S2-S0), the condition code ($\overline{CC}$), the input value, and the zero-detect status. The desired option may be selected using the stack control inputs listed in Table 2.

TABLE 2 – STACK CONTROL

OSEL	S2	S1	S0	STACK OPERATION
X	L	L	L	RESET AND CLEAR SP AND RP
X	L	L	H	CLEAR SP AND RP IF $\overline{CC}$ = L AND ZERO = L
X	L	H	L	POP IF $\overline{CC}$ = H OR $\overline{CC}$ = L AND ZERO = H
X	L	H	H	POP IF $\overline{CC}$ = L AND ZERO = L
X	H	L	L	PUSH IF $\overline{CC}$ = H OR $\overline{CC}$ = L AND ZERO = H
X	H	L	H	PUSH IF $\overline{CC}$ = L AND ZERO = L
X	H	H	L	PUSH IF $\overline{CC}$ = H OR $\overline{CC}$ = L AND ZERO = L
H	H	H	H	HOLD SP AND READ
L	H	H	H	HOLD SP AND RP

The read pointer (RP) is a useful tool in debugging microcoded systems. A microprogrammer now has the ability to perform a nondestructive, sequential read of the stack contents from the DRA port. This capability provides the user with a method of backtracking through the address sequence to determine the cause of overflow without affecting program flow, the status of the stack-pointer or the internal data of the stack. Placing a high value on all of the stack inputs (S2-S0) and OSEL places the 'AS890 or 'AS891 into the read mode. At each low-to-high clock transition, the value pointed to by the read pointer is available at the DRA port and the read pointer is decremented. Microcode diagnostics are simplified by the ability of the 'AS890 or 'AS891 to sequentially dump the contents of its stack. The bottom of the stack is detected by monitoring the STKWRN/RER (stack warning/read error) pin. A high will appear when the stack contains one word and a READ instruction is applied to the S2-S0 pins. This signifies that the last address has been read. The stack pointer and stack contents are uneffected by the READ opertion. Under normal PUSH and POP operations the read pointer is updated with the stack pointer and contains identical information.

The STKWRN/RER pin alerts the system to a potential stack overflow or underflow condition. STKWRN/RER becomes active under two additional conditions. If seven of the nine stack locations (0-8) are full (the stack pointer is at 7) and a PUSH occurs, the STKWRN/RER pin will produce a high-level signal to warn that the stack is approaching its capacity, and will be full after one more PUSH. Knowledge that overflow potential exists allows bit-slice-based systems to continuously process real-time interrupt vectors. This signal will remain high, if HOLD, PUSH, or POP instructions occur, until the stack pointer is decremented to 7.

The user may be protected from attempting to POP an empty stack by monitoring STKWRN/RER before POP operations. A high level at this pin signifies that the last address has been removed from the stack (SP = 0). This condition remains until an address is pushed onto the stack and the stack pointer is incremented to one.

Clearing the stack and read pointer is accomplished by placing low levels onto the stack control lines (S2-S0). This function overrides all of the Y output MUX controls and places the Y bus into a low state.

© IC MASTER 1984

register/counters

Two loadable 14-bit registers extend the looping and branching capabilities of the 'AS890 and 'AS891. Addresses may be loaded directy into register counter A (RA) and register counter B (RB) through the direct data ports DA13-DA0 and DB13-DB0. The values stored in these registers may either be held, decremented, or read as a result of the register control inputs (RC2-RC0), $\overline{RAOE}$, and $\overline{RBOE}$. All combinations of these functions are supported with the exception of a simultaneous decrement of both registers. Generation of iteration routines may be accomplished by loading RA and/or RB and operating them as a down counter. Loop termination is acknowledged by the ZERO output going high to indicate that a register contains a binary one and that a decrement is about to take place. Because of this facility, a "decrement and branch on loop" termination may be executed in the same clock cycle.

The contents of RA is accessable to the DRA port when OSEL is low and the output bus is enabled by $\overline{RAOE}$ being low. Data from RB is available when DRB is enabled by $\overline{RBOE}$ being low. Note that control of the registers is maintained while an external value is active on the DRA and DRB ports. A value being directed from the DRA and DRB busses to the output will not inhibit the decrement operation.

Register/counter controls are listed in Table 3.

TABLE 3 – REGISTER CONTROL

RC2	RC1	RC0	REG A	REG B
L	L	L	HOLD	HOLD
L	L	H	DEC	HOLD
L	H	L	LOAD	HOLD
L	H	H	DEC	LOAD
H	L	L	LOAD	LOAD
H	L	H	HOLD	DEC
H	H	L	HOLD	LOAD
H	H	H	LOAD	DEC

microprogram register and increment

The microprogram register (MPC) and the incrementer (INC) provide the means for generating the next microprogram address for sequential addressing operations. The MPC may be loaded with either the outgoing address on the Y bus or may receive an external address for processing interrupt vectors.

The current address on the Y bus is passed to the MPC at each rising clock edge, either unaltered (INC low) for repeating statements, or incremented by one (INC high) for addressing sequential control store locations.

The MPC may also be externally loaded for subroutine and interrupt functions. Taking $\overline{YOE}$ high and forcing the new address onto the bidirectional Y bus loads the MPC with the new address at the positive clock edge. This value may also be incremented prior to storage in the MPC for sequential addressing of subroutines or interrupt routines.

interrupts

Real-time vectored interrupt routines are supported for those applications where polling would impede system throughput. Any instruction, including PUSHes and POPs, may be interrupted. To process an interrupt, the following procedure should be followed:

1. The bidirectional Y bus is placed into the high-impedance state by forcing $\overline{YOE}$ high.
2. The interrupt entry point vector is then forced onto the Y bus and incremented to become the second microinstruction of the interrupt routine. This is accomplished by making INC high.

© IC MASTER 1984

3. At the following clock edge, the second microaddress is stored in the MPC and the interrupted address will be stored in the INT RT register which always contains the outgoing value on the Y bus. This edge also causes the processor to begin execution of the first instruction of the interrupt routine. This first instruction must PUSH the address stored in the INT RT register onto the stack so that the proper return linkage is maintained. This is accomplished by making $\overline{INT}$ low and performing a PUSH. If this instruction were to be interrupted, the process would be repeated and the proper return linkage preserved.

control inputs

A listing of the response of internal elements in the 'AS890 and 'AS891 to various control inputs is given in Table 4.

TABLE 4 – RESPONSE TO CONTROL INPUTS

PIN NAME	LOGIC LEVEL	
	HIGH	LOW
$\overline{RAOE}$	DRA output in high-Z state	DRA output is active
$\overline{RBOE}$	DRB output in high-Z state	DRB output is active
$\overline{YOE}$	Y output in high-Z state	Y output is active
$\overline{INT}$	MPC to stack	INT RT register to stack
OSEL	Stack to DRA buffer input	RA to DRA buffer input
INC	Adds one to Y output and stores in MPC	Passes Y output to MPC unaltered
MUX2-MUX0	Table 1	Table 1
S2-S0	Table 2	Table 2
RC2-RC0	Table 3	Table 3

instruction set

Sixty-four microsequencing instructions enable the 'AS890 and 'AS891 to generate micro-addresses for up to 16,384 locations. Any instruction can be made conditional depending upon the value of the externally applied condition code ($\overline{CC}$) and the value stored in either of the internal register/counters.

The required signals for selection of the Y output source were listed in Table 1. Suggested methods for implementing a few commonly used instructions are given in Table 5 and flowcharts showing execution examples are illustrated in Figure 1.

It should be noted that the term jump refers to a subroutine call that must be accompanied by a return instruction. The term branch implies that a deviation from the program flow is accomplished but no return is required.

© IC MASTER 1984

TABLE 5 – 'AS890 AND 'AS891 INSTRUCTION SET

FUNCTION	MNEMONIC	MUX2	MUX1	MUX0	S2	S1	S0	CC	FIG
Continue	CONT	X	H	X	H	H	H	H	1A
Unconditional branch	BR	X	L	X	H	H	H	H	1B
Conditional branch (DEC disabled)	CBR	H	H	X	H	H	H	V	1C
Two-way branch (DEC enabled)	BR2W	H	L	L	H	H	H	V	1D
Conditional loop on stack (DEC enabled)	LOOPS	L	L	X	L	H	L	L	1E
Repeat (DEC disabled)	REPEAT	L	L	X	H	H	H	L	1F
Loop on stack with exit (DEC enabled)	LSWE	L	L	X	L	H	L	V	1G
Conditional jump to subroutine	CJSR	H	H	X	H	L	H	V	1H
Jump to subroutine (DEC disabled)	JSR	H	H	X	H	L	H	H	1I
Two-way jump to subroutine (DEC disabled)	JSR2W	H	L	L	H	H	L	V	1J
Repeat until (DEC disabled)	UNTIL	L	H	X	L	H	L	V	1K
Return from subroutine (DEC disabled)	RTS	L	H	X	L	H	H	L	1L
Conditional return from subroutine	CRTS	L	H	X	L	H	H	V	1M
Conditional return from subroutine or branch (DEC enabled)	CRTSB	L	H	X	L	H	H	V	1N
Conditional branch and PUSH (DEC enabled)	CBRP	H	H	X	H	L	H	V	1O
Conditional branch and POP (DEC disabled)	CBRPO	H	H	X	L	H	H	V	1P
PUSH and continue	PUSH	L	H	X	H	X	L	H	1Q
POP and continue	POP	L	H	X	L	H	L	H	1R
Exit from loop	EXITLP	L	L	X	L	H	L	V	1S
Reset and clear stack/read pointer	RESET	X	X	X	L	L	L	X	1T
32-way branch (DEC disabled)	BR32W	H	L	H	H	H	H	V	1U
Execute n times (DEC enabled)	NEX	L	L	X	L	H	L	L	1V

H = high level, L = low level, X = irrelevant, V = varies (condition code value is dependent upon machine and data status and will vary accordingly).

© IC MASTER 1984

absolute maximum ratings over operating free-air temperature range (unless otherwise noted)

Supply voltage, V_{CC1} . . . . . 7 V
Supply voltage, V_{CC2} . . . . . 3 V
Input voltage: All inputs . . . . . 7 V
I/O ports . . . . . 5.5 V
Operating free-air temperature range: SN54AS890, SN54AS891 . . . . . −55 °C to 125 °C
SN74AS890, SN74AS891 . . . . . 0 °C to 70 °C
Storage temperature range . . . . . −65 °C to 150 °C

recommended operating conditions

			SN54AS890 SN54AS891			SN74AS890 SN74AS891			UNIT
			MIN	NOM	MAX	MIN	NOM	MAX	
V_{CC1}	I/O supply voltage		4.5	5	5.5	4.5	5	5.5	V
V_{CC2}	STL internal logic supply voltage		1.8	2	2.2	1.8	2	2.2	V
V_{IH}	High-level input voltage		2			2			V
V_{IL}	Low-level input voltage				0.8			0.8	V
I_{OH}	High-level output current				−1			−1	mA
								−2.6†	
I_{OL}	Low-level output current	All outputs except Y13-Y0			8			8	mA
		Y13-Y0			12			12	
T_A	Operating free-air temperature		−55		125	0		70	°C

† The extended conditions apply only if V_{CC1} is maintained between 4.75 and 5.25V.

DIGITAL

Texas Instruments

© IC MASTER 1984

electrical characteristics over recommended operating free-air temperature range (unless otherwise noted)

PARAMETER		TEST CONDITIONS		SN54AS890 SN54AS891 MIN	TYP†	MAX	SN74AS890 SN74AS891 MIN	TYP†	MAX	UNIT
V_{IK}		V_{CC1} = 4.5 V,	I_I = −18mA			−1.2			−1.2	V
V_{OH}		V_{CC1} = 4.5 V,	I_{OH} = −1 mA	2.4	3.4		2.4	3.4		V
		V_{CC1} = 4.75 V,	I_{OH} = −2.6 mA				2.4			
V_{OL}	All outputs except Y13-Y0	V_{CC1} = 4.5 V,	I_{OL} = 8 mA			0.55			0.55	V
	Y13-Y0	V_{CC1} = 4.5 V,	I_{OL} = 12 mA			0.55			0.55	
I_I	Inputs	V_{CC1} = 5.5 V,	V_I = 7 V			0.1			0.1	mA
	I/O ports	V_{CC1} = 5.5 V,	V_I = 5.5 V			0.1			0.1	
I_{IH}	Inputs	V_{CC1} = 5.5 V,	V_I = 2.7 V			20			20	μA
	I/O ports ▲					40			40	
I_{IL}	$\overline{EA}$ and $\overline{OEB}$	V_{CC1} = 5.5 V,	V_I = 0.4 V			0.4			0.4	mA
	Other inputs					0.2			0.2	
	I/O ports ▲					0.4			0.4	
I_O§		V_{CC1} = 5.5 V,	V_O = 2.25 V	−30		−112	−30		−112	mA
I_{CC1}		V_{CC1} = 5.5 V	Outputs low		100			100		mA
			Outputs disabled							
I_{CC2}		V_{CC2} = 2.2 V	Outputs high		130			130		mA
			Outputs low							
			Outputs disabled							

† All typical values are at V_{CC} = 5 V, T_A = 25°C.
§ The output conditions have been chosen to produce a current that closely approximates one-half of the true short-circuit current, I_{OS}.
▲ For I/O ports, the parameters I_{IH} and I_{IL} include output currents I_{OZH} and I_{OZL}, respectively.

typical switching characteristics

PARAMETER	FROM (INPUT)	TO (OUTPUT) Y	ZERO	DRA	DRB	UNIT
t_{pd}	$\overline{CC}$	12				ns
	CK	18		18	16	
		24†	26†			
	DRA13-DRA0	8				
	DRB13-DRB0	8				
	MUX2-MUX0	12				
	RC2-RC0	12	14			
	S2-S0	12				
	$\overline{YOE}$	8				

† Decrementing Register/Counter A or B and sensing a zero.

Additional information on these products can be obtained from the factory as it becomes available.

© IC MASTER 1984

setup and hold times

PARAMETER	FROM (INPUT)	TO (DESTINATION)	TYP	MAX	UNIT
t_{su}	$\overline{CC}$	Stack (PUSH)	10		ns
		Stack (POP,READ)	26		
	DRA13-DRA0	RCA, RCB, INT RT	8		
	DRB13-DRB0	RCA, RCB, INT RT	8		
	INC	MPC	12		
	$\overline{INT}$	Stack (PUSH)	10		
	MUX2-MUX0	Stack (PUSH)	10		
		Stack (POP,READ)	26		
	RC2-RC0	Stack (PUSH)	10		
		Stack (POP,READ)	26		
		RCA, RCB	12		
	S2-S0	Stack (PUSH)	10		
		Stack (POP,READ)	26		
t_h	Any Input	Any Destination	0		

minimum clock requirements

PARAMETER		MIN	TYP	MAX	UNIT
$t_{wL(CK)}$	Pulse width, clock low	5			ns
$t_{wH(CK)}$	Pulse width, clock high	10			
$t_{c(CK)}$	Clock cycle time	40			

Additional information on these products can be obtained from the factory as it becomes available.

© IC MASTER 1984

TYPES SN54LS636, SN54LS637, SN74LS636, SN74LS637
8-BIT PARALLEL ERROR DETECTION AND CORRECTION CIRCUITS

D2728, APRIL 1983

- Detects and Corrects single-Bit Errors
- Detects and Flags Dual-Bit Errors
- Fast Processing Times:
  - Write Cycle: Generates Check Word in 45 ns Typical
  - Read Cycle: Flags Errors in 27 ns Typical
- Power Dissipation 500 mW Typical
- Choice of Output Configurations:
  - 'LS636 . . . 3-State
  - 'LS637 . . . Open-Collector

SN54LS' . . . J PACKAGE
SN74LS' . . . N PACKAGE
(TOP VIEW)

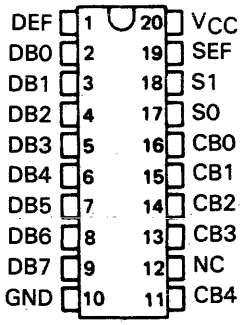

SN54LS' . . . FH PACKAGE
SN74LS' . . . FN PACKAGE
(TOP VIEW)

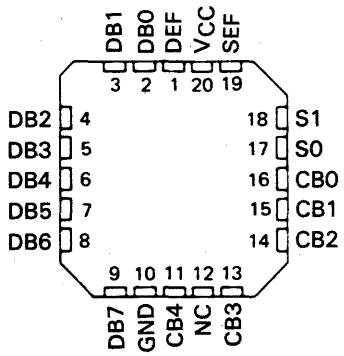

NC—No internal connection.

description

The 'LS636 and 'LS637 devices are 8-bit parallel error detection and correction circuits (EDACs) in 20-pin, 300-mil packages. They use a modified Hamming code to generate a 5-bit check word from an 8-bit data word. This check word is stored along with the data word during the memory write cycle. During the memory read cycle, the 13-bit words from memory are processed by the EDACs to determine if errors have occurred in memory.

Single-bit errors in the 8-bit data word are flagged and corrected.

Single-bit errors in the 5-bit check word are flagged, and the CPU sends the EDAC through the correction cycle even though the 8-bit word is not in error. The correction cycle will simply pass along the original 8-bit word in this case and produce error syndrome bits to pinpoint the error-generating location.

Dual-bit errors are flagged but not corrected. These dual errors may occur in any two bits of the 13-bit word from memory (two errors in the 8-bit data word, two errors in the 5-bit check word, or one error in each word).

The gross-error condition of all highs from memory will be detected. Otherwise, errors in three or more bits of the 13-bit word are beyond the capabilities of these devices to detect.

CONTROL FUNCTION TABLE

MEMORY CYCLE	CONTROL S1	CONTROL S0	EDAC FUNCTION	DATA I/O	CHECK WORD I/O	ERROR FLAGS SEF	ERROR FLAGS DEF
WRITE	L	L	Generate Check Word	Input Data	Output Check Word	L	L
READ	L	H	Read Data & Check Word	Input Data	Input Check Word	L	L
READ	H	H	Latch & Flag Errors	Latch Data	Latch Check Word	Enabled	
READ	H	L	Correct Data Word & Generate Syndrome Bits	Output Corrected Data	Output Syndrome Bits	Enabled	

Copyright © 1983 by Texas Instruments Incorporated

See Application Note section for additional information on Texas Instruments Bipolar EDAC products

TEXAS INSTRUMENTS
POST OFFICE BOX 225012 • DALLAS, TEXAS 75265

functional block diagram

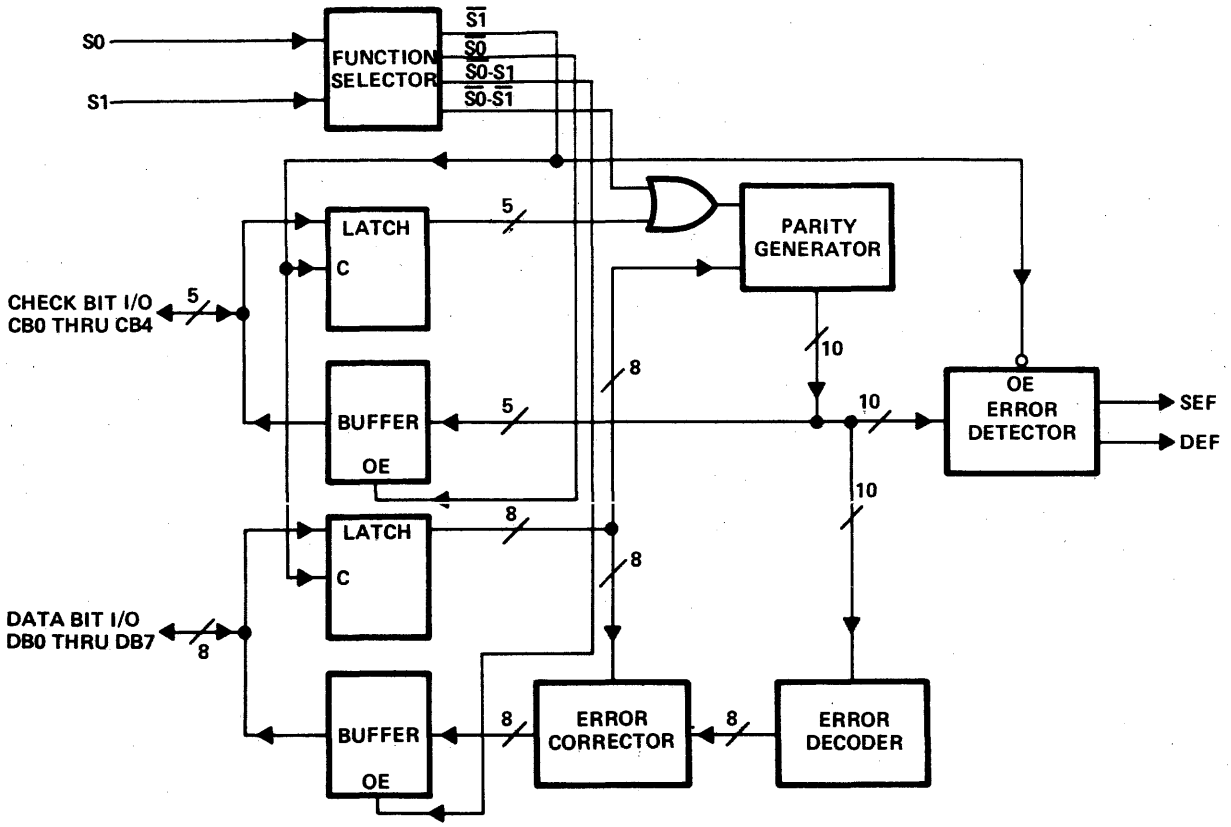

ERROR FUNCTION TABLE

TOTAL NUMBER OF ERRORS		ERROR FLAGS		DATA
8-BIT DATA	5-BIT CHECKWORD	SEF	DEF	CORRECTION
0	0	L	L	Not Applicable
1	0	H	L	Correction
0	1	H	L	Correction
1	1	H	H	Interrupt
2	0	H	H	Interrupt
0	2	H	H	Interrupt

In order to be able to determine whether the data from the memory is acceptable to use as presented to the bus, the EDAC must be strobed to enable the error flags and the flags will have to be tested for the zero condition.

The first case in the error function table represents the normal, no-error condition. The CPU sees lows on both flags. The next two cases of single-bit errors require data correction. Although the EDAC can discern the single check bit error and ignore it, the error flags are identical to the single error in the 8-bit data word. The CPU will ask for data correction in both cases. An interrupt condition to the CPU results in each of the last three cases, where dual errors occur.

error detection and correction details

During a memory write cycle, five check bits (CB0-CB4) are generated by eight-input parity generators using the data bits as defined below. During a memory read cycle, the 5-bit check word is retrieved along with the 8-bit data word.

See Application Note section for additional information on Texas Instruments Bipolar EDAC products

© IC MASTER 1984

CHECKWORD	8-BIT DATA WORD							
BIT	0	1	2	3	4	5	6	7
CB0	X	X		X	X			
CB1	X		X	X		X	X	
CB2		X	X		X	X		X
CB3	X	X	X				X	X
CB4				X	X	X	X	X

The five check bits are parity bits derived from the matrix of data bits as indicated by "X" for each bit.

Error detection is accomplished as the 5-bit check word and the 8-bit data word from memory are applied to internal parity generators/checkers. If the parity of all five groupings of data and check bits are correct, it is assumed that no error has occurred and both error flags will be low.

If the parity of one or more of the check groups is incorrect, an error has occurred and the proper error flag or flags will be set high. Any single error in the 8-bit data word will change the sense of exactly three bits of the 5-bit check word. Any single error in the 5-bit check word changes the sense of only that one bit. In either case, the single error flag will be set high while the dual error flag will remain low.

Any two-bit error will change the sense of an even number of check bits. The two-bit error is not correctable since the parity tree can only identify single-bit errors. Both error flags are set high when any two-bit error is detected.

Three or more simultaneous bit errors can fool the EDAC into believing that no error, a correctable error, or an uncorrectable error has occurred and produce erroneous results in all three cases.

Error correction is accomplished by identifying the bad bit and inverting it. Identification of the erroneous bit is achieved by comparing the 8-bit data word and 5-bit check word from memory with the new check word with one (check word error) or three (data word error) inverted bits.

As the corrected word is made available on the data word I/O port, the check word I/O port presents a 5-bit syndrome error code. This syndrome code can be used to identify the bad memory chip.

ERROR SYNDROME TABLE

ERROR LOCATION	SYNDROME ERROR CODE				
	CB0	CB1	CB2	CB3	CB4
DB0	L	L	H	L	H
DB1	L	H	L	L	H
DB2	H	L	L	L	H
DB3	L	L	H	H	L
DB4	L	H	L	H	L
DB5	H	L	L	H	L
DB6	H	L	H	L	L
DB7	H	H	L	L	L
CB0	L	H	H	H	H
CB1	H	L	H	H	H
CB2	H	H	L	H	H
CB3	H	H	H	L	H
CB4	H	H	H	H	L
NO ERROR	H	H	H	H	H

© IC MASTER 1984

schematics of inputs and outputs

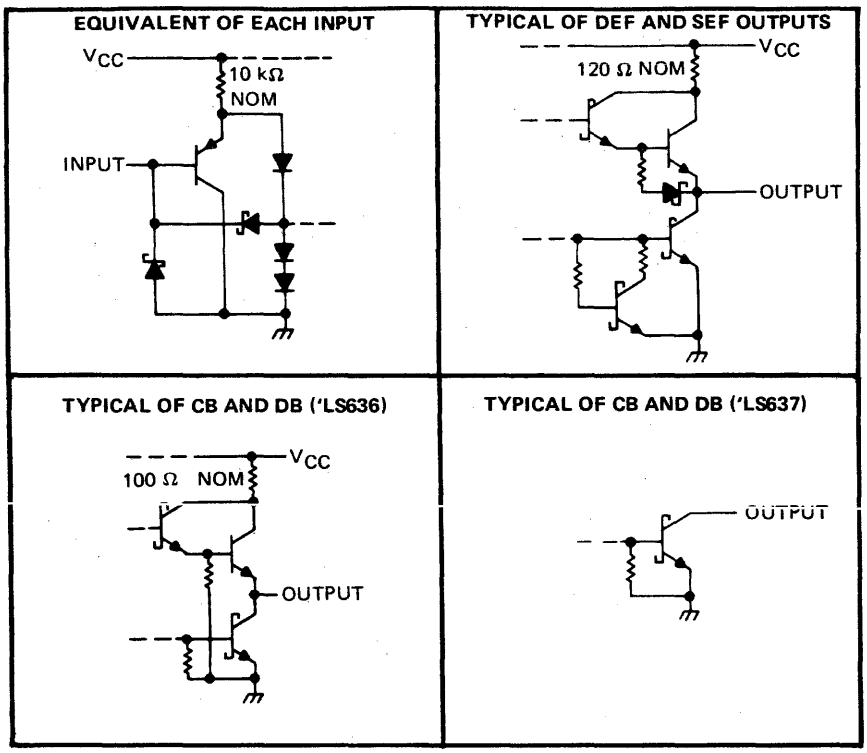

absolute maximum ratings over operating free-air temperature range (unless otherwise noted)

Supply voltage, V_{CC} (see Note 1)		7 V
Input voltage: S0 and S1		7 V
CB and DB		5.5 V
Off-state output voltage		5.5 V
Operating free-air temperature range:	SN54LS636, SN54LS637	−55°C to 125°C
	SN74LS636, SN74LS637	0°C to 70°C
Storage temperature range		−65°C to 150°C

NOTE 1: Voltage Values are with respect to network ground terminal.

recommended operating conditions

		SN54LS636 SN54LS637			SN74LS636 SN74LS637			UNIT
		MIN	NOM	MAX	MIN	NOM	MAX	
Supply voltage, V_{CC}		4.5	5	5.5	4.75	5	5.25	V
High-level output current, I_{OH}	CB or DB, 'LS636 only			−1			−1	mA
	DEF or SEF			−0.4			−0.4	
High-level output voltage, V_{OH}	CB or DB, 'LS637 only			5.5			5.5	V
Low-level output current, I_{OL}	CB or DB			12			24	mA
	DEF or SEF			4			8	
Setup time, t_{su}	CB or DB before S1↑	10			10			ns
Hold time, t_h	CB or DB after S1↑	15			15			ns
Operating free-air temperature, T_A		−55		125	0		70	°C

↑The upward-pointing arrow indicates a transition from low to high.

© IC MASTER 1984

electrical characteristics over recommended operating free-air temperature range (unless otherwise noted)

PARAMETERS			TEST CONDITIONS†		SN54LS636 MIN	SN54LS636 TYP‡	SN54LS636 MAX	SN74LS636 MIN	SN74LS636 TYP‡	SN74LS636 MAX	UNIT
V_{IH}	High-level input voltage				2			2			V
V_{IL}	Low-level input voltage						0.7			0.8	V
V_{IK}	Input clamp voltage		V_{CC} = MIN,	I_I = −18 mA			−1.5			−1.5	V
V_{OH}	High-level output voltage	CB or DB	V_{CC} = MIN, V_{IH} = 2 V, V_{IL} = V_{IL} min	I_{OH} = MAX	2.4	3.3		2.4	3.2		V
		DEF or SEF		I_{OH} = −400 μA	2.5	3.4		2.7	3.4		
V_{OL}	Low-level output voltage	CB or DB	V_{CC} = MIN, V_{IH} = 2 V, V_{IL} = V_{IL} max	I_{OL} = 12 mA		0.25	0.4		0.25	0.4	V
				I_{OL} = 24 mA					0.35	0.5	
		DEF or SEF		I_{OL} = 4 mA		0.25	0.4		0.25	0.4	
				I_{OL} = 8 mA					0.35	0.5	
I_{OZH}	Off-state output current, high-level voltage applied	CB or DB	V_{CC} = MAX, S0 and S1 at 2 V	V_O = 2.7 V,			20			20	μA
I_{OZL}	Off-state output current, low-level voltage applied	CB or DB	V_{CC} = MAX, S0 and S1 at 2 V	V_O = 0.4 V,			−0.2			−0.2	mA
I_I	Input current at maximum input voltage	CB or DB	V_{CC} = MAX, V_{IH} = 4.5 V	V_I = 5.5 V			0.1			0.1	mA
		S0 or S1		V_I = 7 V			0.1			0.1	
I_{IH}	High-level input current		V_{CC} = MAX,	V_I = 2.7 V			20			20	μA
I_{IL}	Low-level input current		V_{CC} = MAX,	V_I = 0.4 V			−0.2			−0.2	mA
I_{OS}	Short-circuit output current¶	CB or DB	V_{CC} = MAX		−30		−130	−30		−130	mA
		DEF or SEF			−20		−100	−20		−100	
I_{CC}	Supply current		V_{CC} = MAX, S0 and S1 at 4.5 V, All CB and DB pins grounded, DEF and SEF open			100	160		100	160	mA

PARAMETER			TEST CONDITIONS†		SN54LS637 MIN	SN54LS637 TYP‡	SN54LS637 MAX	SN74LS637 MIN	SN74LS637 TYP‡	SN74LS637 MAX	UNIT
V_{IH}	High-level input voltage				2			2			V
V_{IL}	Low-level input voltage						0.7			0.8	V
V_{IK}	Input clamp voltage		V_{CC} = MIN,	I_I = −18 mA			−1.5			−1.5	V
V_{OH}	High-level output voltage	DEF or SEF	V_{CC} = MIN, V_{IH} = 2 V,	I_{OH} = −400 μA, V_{IL} = V_{IL} max	2.5	3.4		2.7	3.4		V
I_{OH}	High-level output current	CB or DB	V_{CC} = MIN, V_{IH} = 2 V,	V_{OH} = 5.5 V, V_{IL} = V_{IL} max			0.1			0.1	mA
V_{OL}	Low-level output voltage	CB or DB	V_{CC} = MIN, V_{IH} = 2 V, V_{IL} = V_{IL} max	I_{OL} = 12 mA		0.25	0.4		0.25	0.4	V
				I_{OL} = 24 mA					0.35	0.5	
		DEF or SEF		I_{OL} = 4 mA		0.25	0.4		0.25	0.4	
				I_{OL} = 8 mA					0.35	0.5	
I_I	Input current at maximum input voltage	CB or DB	V_{CC} = MAX, V_{IH} = 4.5 V	V_I = 5.5 V			0.1			0.1	mA
		S0 or S1		V_I = 7 V			0.1			0.1	
I_{IH}	High-level input current		V_{CC} = MAX	V_I = 2.7 V			20			20	μA
I_{IL}	Low-level input current		V_{CC} = MAX,	V_I = 0.4 V			−0.2			−0.2	mA
I_{OS}	Short-circuit output current¶	DEF or SEF	V_{CC} = MAX		−20		−100	−20		−100	mA
I_{CC}	Supply current		V_{CC} = MAX, S0 and S1 at 4.5 V, All CB and DB grounded, SEF and DEF open			90	144		90	144	mA

†For conditions shown as MIN or MAX, use the appropriate value specified under recommended operating conditions.
‡All typical values are at V_{CC} = 5 V, T_A = 25°C.
¶Not more than one output should be shorted at a time, and duration of the short circuit should not exceed one second.

© IC MASTER 1984

'LS636 switching characteristics, V_{CC} = 5 V, T_A = 25°C, C_L = 45 pF

PARAMETER	FROM (INPUT)	TO (OUTPUT)	TEST CONDITIONS	'LS636 MIN	TYP	MAX	UNIT
t_{PLH} Propagation delay time, low-to-high-level output◇	DB	CB	S0 at 0 V, S1 at 0 V, R_L = 667 Ω, See Figure 1		31	45	ns
t_{PHL} Propagation delay time, high-to-low-level output◇					45	65	ns
t_{PLH} Propagation delay time, low-to-high-level output*	S1↑	DEF	S0 at 3 V, R_L = 2 kΩ, See Figure 1		27	40	ns
		SEF			20	30	
t_{PZH} Output enable time to high level#	S0↓	CB, DB	S1 at 3 V, R_L = 667 Ω, See Figure 2		24	40	ns
t_{PZL} Output enable time to low level#	S0↓	CB, DB	S1 at 3 V, R_L = 667 Ω, See Figure 1		30	45	ns
t_{PHZ} Output disable time from high level▲	S0↑	CB, DB	S1 at 3 V, R_L = 667 Ω, See Figure 2		43	65	ns
t_{PLZ} Output disable time from low level▲	S0↑	CB, DB	S1 at 3 V, R_L = 667 Ω, See Figure 1		31	45	ns

'LS637 switching characteristics, V_{CC} = 5 V, T_A = 25°C, C_L = 45 pF, see Figure 1

PARAMETER	FROM (INPUT)	TO (OUTPUT)	TEST CONDITIONS	'LS637 MIN	TYP	MAX	UNIT
t_{PLH} Propagation delay time, low-to-high level output◇	DB	CB	S0 at 0 V, S1 at 0V, R_L = 667 Ω		38	55	ns
t_{PHL} Propagation delay time, high-to-low-level output◇					45	65	ns
t_{PLH} Propagation delay time, low-to-high-level output*	S1↑	DEF	S0 at 3 V, R_L = 2 kΩ		27	40	ns
		SEF			20	30	ns
t_{PHL} Propagation delay time, high-to-low-level output#	S0↓	CB, DB	S1 at 3 V, R_L = 667 kΩ		28	45	ns
t_{PLH} Propagation delay time, low-to-high-level output▲	S0↑	CB, DB	S1 at 3 V, R_L = 667 kΩ		33	50	ns

◇These parameters describe the time intervals taken to generate the check word during the memory write cycle.
*These parameters describe the time intervals taken to flag errors during the memory read cycle.
#These parameters describe the time intervals taken to correct and output the data word and to generate and output the syndrome error code during the memory read cycle.
▲These parameters describe the time intervals taken to disable the CB and DB buses in preparation for a new data word during the memory read cycle.

PARAMETER MEASUREMENT INFORMATION

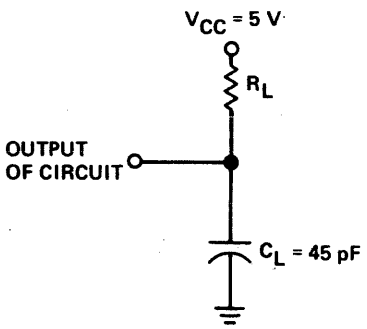

FIGURE 1—OUTPUT LOAD CIRCUIT

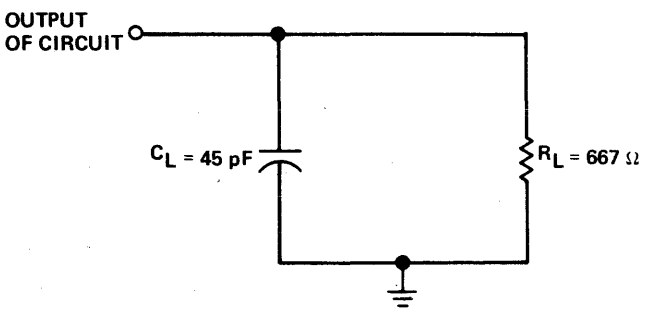

FIGURE 2—OUTPUT LOAD CIRCUIT

© IC MASTER 1984

TDC1023

Digital Output Correlator
64–bit

The TRW TDC1023 is a monolithic, all-digital 64-bit correlator with a 7-bit three-state buffered digital output. This device consists of three 64-bit independently clocked shift registers, one 64-bit reference holding latch, and a 64-bit independently clocked digital summing network. The device is capable of a 17 MHz parallel correlation rate.

The 7-bit threshold register allows the user to preload a binary number from 0 to 64. Whenever the correlation is equal to or greater than the number in the threshold register, the threshold flag goes HIGH.

The 64-bit mask shift register (M register) allows the user to mask or selectively choose "no compare" bit positions enabling total word length flexibility.

The reference word is serially shifted into the B register. By clocking the R latch, the data is parallel-loaded into the R reference latch. This allows the user to serially load a new reference word into the B register while correlation is taking place between the A register and R latch. The two words are continually compared bit-for-bit by exclusive-OR circuits. Each exclusive-OR provides one bit to the digital summer. The output is a 7-bit word representing the sum of positions which agree at any one time between the A register and R latch.

A control provides either true or inverted binary output formats.

Features

- 17 MHz Correlation Rate
- TTL Compatible
- All Digital
- Single +5V Power Supply
- Serial Data Input, Parallel Correlation Output
- Programmable Word Length
- Independently Clocked Registers
- Available In 24 Pin DIP
- Output Format Flexibility
- Three-State Outputs

Applications

- Check Sorting Equipment
- High-Density Recording
- Bar Code Identification
- Radar Signature Recognition
- Video Frame Synchronization
- Electro-Optical Navigation
- Pattern And Character Recognition
- Cross-Correlation Control Systems
- Error Correction Coding
- Asynchronous Communication

Functional Block Diagram

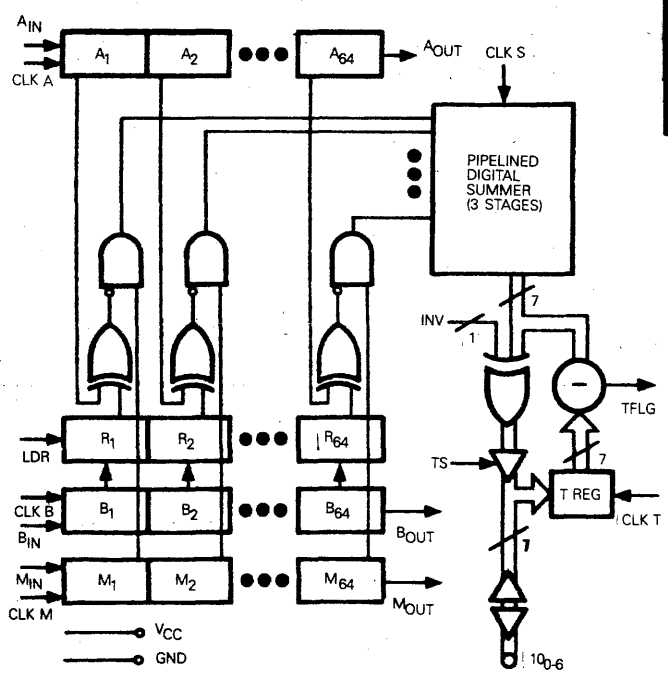

LSI Products Division
TRW Electronic Components Group
P.O. Box 2472
La Jolla, Ca. 92038

Phone: (619) 457-1000
Telex: 697-957
TWX: 910-335-1571

© TRW Inc. 1982

40G00817 Rev. A–6/82
Printed in the U.S.A.

© IC MASTER 1984

TDC1028
Advance Information

FIR Digital Filter
Building Block

The TRW TDC1028 is a video-speed, TTL compatible bit-slice "building block" for Finite Impulse Response (FIR) digital filters and for multi-bit digital correlators. It is implemented as a bit-slice processor independently in the coefficient and signal data word dimensions. Word lengths can be multiples of four bits. Two's complement or unsigned magnitude operation is independently selectable for both coefficients and signal data words.

The TDC1028 provides eight delay stages, eight multipliers, and eight adders in a single integrated circuit. Eight coefficient storage registers are also provided for ease in programming filter characteristics. One coefficient may be changed every clock cycle. The delay registers and the adder pipeline registers have been merged for efficiency.

Features

- 20 MegaSamples Per Second (MSPS) Throughput Rate
- Eight Coefficients
- Cascadable (To>36 Taps) Without External Components
- 4 Bit Coefficient And Signal Data Words
- Independently Expandable Coefficient And Signal Word Length
- Independently Selectable Format For Coefficients And Signal Data Words (Two's Complement Or Unsigned Magnitude)
- 48-Pin DIP Or 68-Pin Leaded Or Leadless Chip Carrier
- Single +5V Power Supply
- TTL Compatible

Applications

- Digital Video Filters
- Matched Filters
- Pulse Compression
- Multi-Bit Correlation
- Waveform Synthesis
- Adaptive Filters

Functional Block Diagram

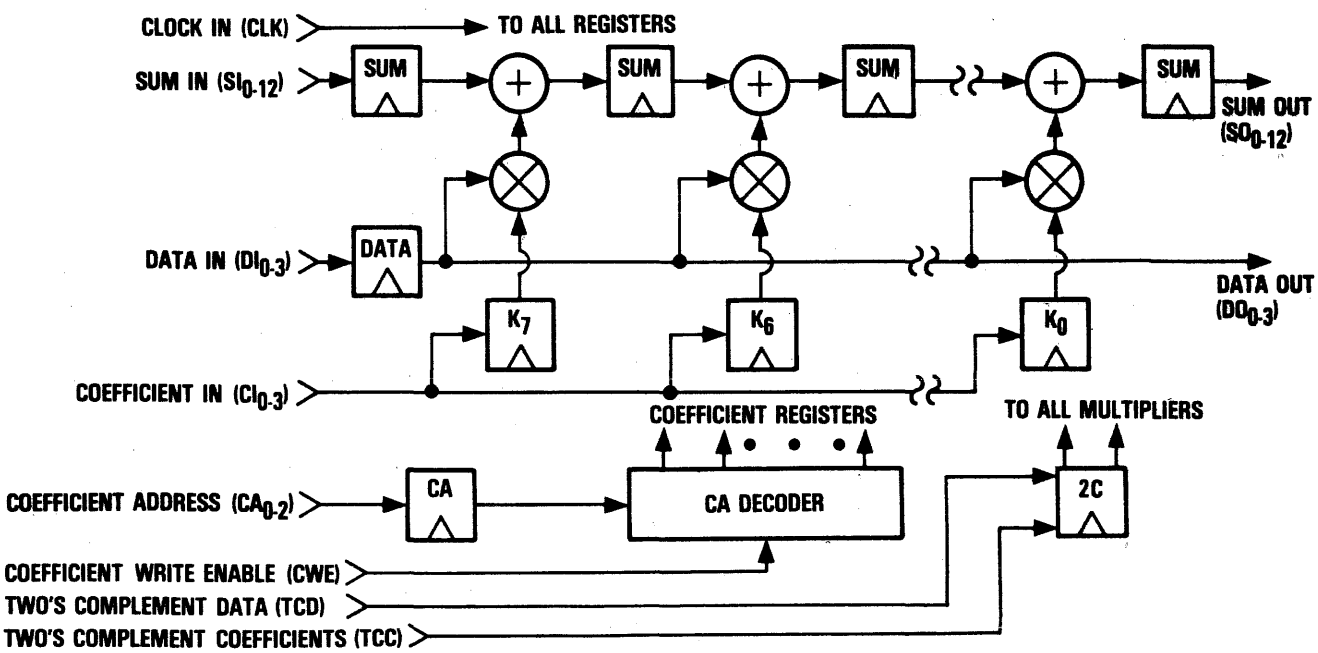

LSI Products Division
TRW Electronic Components Group
P.O. Box 2472
La Jolla, Ca. 92038

Phone: (714) 457-1000
Telex: 697-957
TWX: 910-335-1571

© TRW Inc. 1982

40G00817 Rev. A–6/82
Printed in the U.S.A.

© IC MASTER 1984

TDC1030
Preliminary Information

First-In First-Out Memory
64 words by 9 bits
cascadable

The TRW TDC1030 is an expandable, First-In First-Out (FIFO) memory organized as 64 words by 9 bits. A 15-MHz data rate makes it ideal in high-speed applications. Burst data rates of 18 MHz can be obtained in applications where the device status flags are not used.

With separate Shift-In (SI) and Shift-Out (SO) controls, reading and writing operations are completely independent, allowing synchronous and asynchronous data transfers. Additional controls include a Master Reset ($\overline{MR}$), and Output Enable ($\overline{OE}$). Input Ready (IR) and Output Ready (OR) flags are provided to indicate device status.

Devices can be easily interconnected to expand word and bit dimensions. The device has all output pins directly opposite the corresponding input pins, facilitating board layouts in expanded format. All inputs and outputs are TTL compatible.

Features

- 64-Word By 9-Bit Organization
- 15-MHz Shift-In, Shift-Out Rates With Flags
- 18-MHz Burst-In, Burst-Out Rates Without Flags
- Cascadable to 13 MHz
- Readily Expandable in Word and Bit Dimension
- TTL Compatible
- Asynchronous Or Synchronous Operation
- Three-State Outputs
- Master Reset Input To Clear Data And Control
- Output Pins Directly Opposite Corresponding Input Pins For Easy Board Layout
- Available in 28 Lead Ceramic DIP, CERDIP, or Contact Chip Carrier

Applications

- High-Speed Disk or Tape Controller
- Video Time Base Correction
- A/D Output Buffers
- Voice Synthesis
- Input/Output Formatter For Digital Filters and FFTs

DIGITAL

TRW LSI Products

Functional Block Diagram

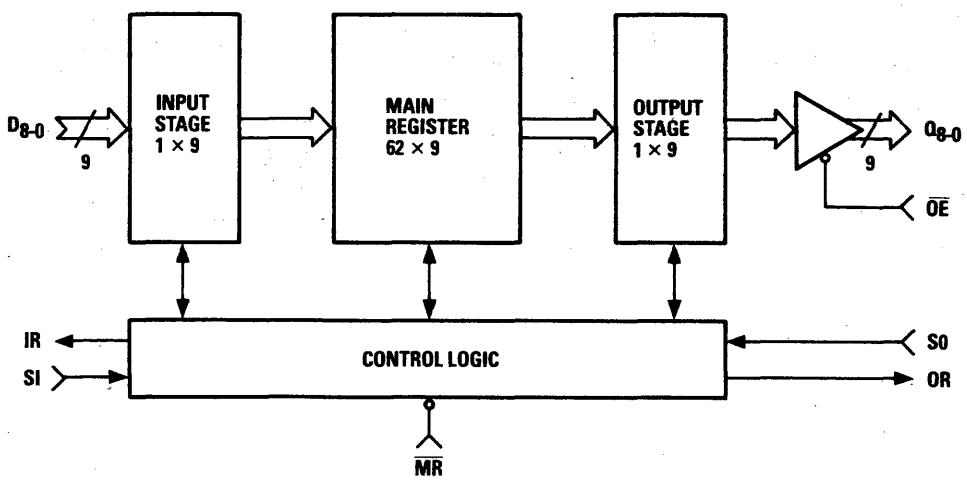

LSI Products Division
TRW Electronic Components Group
P.O. Box 2472
La Jolla, Ca. 92038

Phone: (619) 457-1000
Telex: 697-957
TWX: 910-335-1571

©TRW Inc. 1983
40G00400 Rev. E-2/83
Printed in the U.S.A.

© IC MASTER 1984

FLOATING POINT ARITHMETIC UNIT
22 BIT

MODEL: TDC1022

The TDC1022 is a high speed, TTL compatible, 22-bit VLSI floating point arithmetic unit. It operates on two binary numbers, each with a 16-bit two's complement significand and a 6-bit two's complement exponent. Its high performance results from a proven method developed and patented by TRW (U.S. Patent No. 3,900,724). The main internal adders and shifters achieve a speed power product of less than 1.0 picojoule per equivalent gate.

One output and two input data registers are provided along with three-state outputs. These registers are positive-edge triggered type D flip-flops with a common clock. An input latch is provided to demultiplex the two input operands from a single input bus.

The TDC1022 allows parallel loading and outputting of data and several external command and flag options. An internal pipeline register may be enabled to ensure a full arithmetic throughput rate of 10MHz, (100 nsec, Typ.).

FEATURES

- Floating Point, Two's Complement
- Dynamic Range Equivalent to 64 Bits Fixed Point
- Selectable Pipelining, 100 nsec stage time
- Three-State TTL Output
- Selectable Add/Accumulate Function
- 12 Function Data/Arithmetic Control
- ÷2 Scaling Function for FFT's
- Selectable Saturating Arithmetic
- Parallel Data I/O
- Single 5V Supply
- 64 Pin DIP or 68 Contact Ceramic Leadless Chip Carrier

APPLICATIONS

- Image Processing
- ALU in Array Processor
- Conversion between Fixed and Floating Point Numbers
- Digital Filters
- FFT's
- Secure Communications

INSTRUCTIONS

Zero	A Denormalize
A + B	− A Denormalize
A − B	Limit (LMT)
B − A	Round (RND)
B Normalize	÷2, Scale (SCA)
− B Normalize	Accumulate (ACC)

FLAGS

Exponent Overflow	Zero
Significand Overflow	Exponent Underflow

BLOCK DIAGRAM

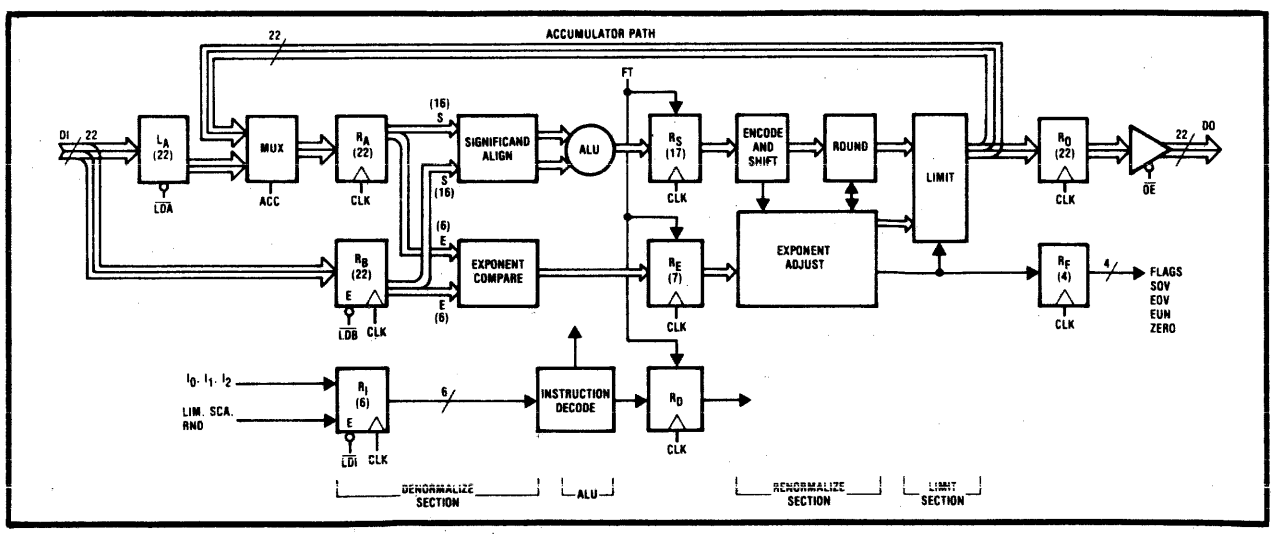

TRW LSI PRODUCTS
P.O. Box 2472 La Jolla, California 92038
(619) 457–1000 Telex: 697–957 TWX: 910–335–1571

©TRW Inc. 1981

40G00270 Rev. B–

© IC MASTER 1984

VLSI MULTIPLIER MPY112K

12 X 12 BITS

PRELIMINARY INFORMATION

MODEL: MPY112K

The MPY112K is a 12 x 12 bit parallel multiplier designed to operate at a 20 MHz video rate. Fabrication of this device using TRW's latest fine-geometry bipolar process offers a three to one improvement in delay-power product over the previously available technology. Multiplication may be performed on two's complement 12 bit operands or on unsigned magnitude 12 bit operands yielding a 16 bit product.

One output and two input registers are provided along with three-state outputs. These registers are positive edge triggered type D flip-flops. The X input is latched by CLK X and the Y input along with the product output is latched by CLK M.

The MPY112K is packaged in a 48 pin DIP for compact size. Applications for the device include real time digital signal processing, use in array processors, and geometric transformations.

FEATURES

- 50 ns Multiply time Over Commercial Temperature Range
- 12 x 12 Bit Parallel Multiplication With 16 Bit Product Output
- All Inputs And Outputs Are Latched TTL Compatible
- Three-State TTL Output
- Two's Complement Or Unsigned Magnitude Multiplication
- Radiation Hard Bipolar Process
- Single +5V Power Supply
- Ceramic 48 Pin DIP

APPLICATIONS

- Digital Video Filtering And Real Time Signal Processing
- Image Processing
- Elements In Array Processors
- FFT Calculations
- Geometric Transformations For Graphics Processing

MPY112K FUNCTIONAL BLOCK DIAGRAM

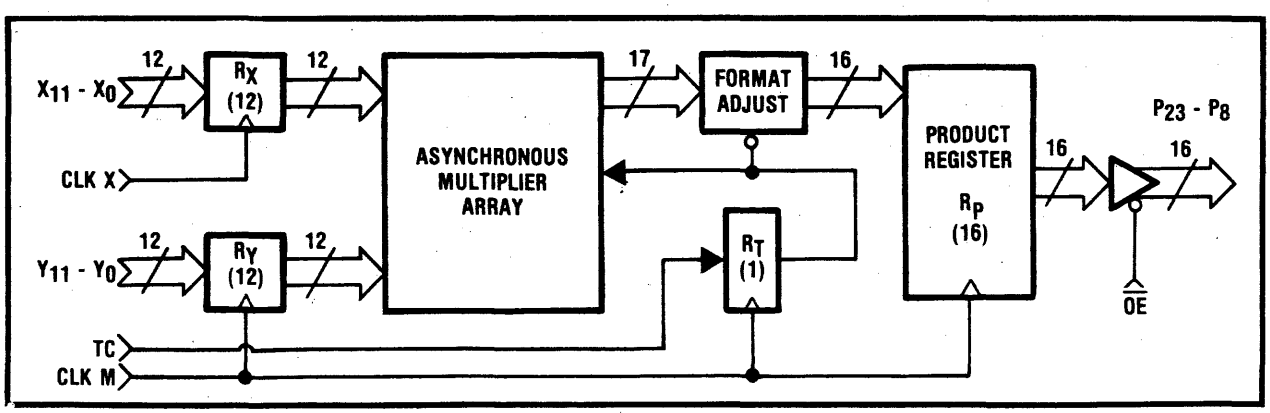

40500388 Rev. B—2/82
©TRW Inc. 1982

TRW LSI PRODUCTS
P.O. BOX 2472
LA JOLLA, CALIFORNIA 92038
(714) 457 —1000 Telex: 697—957 TWX: 910—335—1571

Multipliers

TRW parallel multipliers offer a wide range of word sizes (8 to 16 bits) and speeds to meet requirements in a variety of signal processing and computer applications. All devices are TTL compatible. Except as noted, they perform two's complement and unsigned magnitude arithmetic. The MPY112K has been optimized for minimum package size and operation at video processing rates (20 MHz). The MPY112K and MPY016K have been developed for speed utilizing TRW's Omicron-B, one micron triple-diffused bipolar technology.

Product	Size	Multiplication Time* (nsec)	Power Dissipation* (watts)	Package	Available	Extended Temperature Range Available	Notes
MPY008H	8×8	90	1.3	J5, C2	Now	−55°C to 125°C	Two's complement
	8×8	65	1.3	J5, C2	Now	no	Two's complement
MPY008HU	8×8	90	1.3	J5, C2	Now	−55°C to 125°C	Unsigned magnitude
	8×8	65	1.3	J5, C2	Now	no	Unsigned magnitude
MPY012H	12×12	115	3.0	J1, C1, L1, F1	Now	−55°C to 125°C	
MPY112K	12×12	50	2.2	J4	Now	2Q83	16 bit product
MPY016H	16×16	145	4.4	J1, C1, L1, F1	Now	−55°C to 125°C	
	16×16	120	4.4	J1, C1, L1, F1	Now	−55°C to 125°C	Speed selected version
MPY016K	16×16	50	4.0	J1, C1, L1	3Q83	4Q83	
MPY008A**	8×8	170	1.5	J5	Now	−55°C to 125°C	Two's complement
MPY012A**	12×12	200	3.8	J2	Now	−55°C to 125°C	Two's complement
MPY016A**	16×16	230	5.0	J2	Now	−55°C to 125°C	Two's complement

* Guaranteed, Worst Case, T_A = 0°C to 70°C.

**The older "A" series multipliers are available to support ongoing production, but offer no advantage over the "H" and "K" series and are not recommended for new designs.

Multiplier-Accumulators

Multiplier-accumulators perform the sum-of-products operation found in most signal processing algorithms. With the accumulator adder embedded in the multiplier array, the product and sum are computed in only slightly more time than is required to develop the product alone. The devices will add or subtract the accumulated sum from the new product. Accumulator clearing is accomplished simultaneously with the computation of the first product, and the accumulator may be disabled for operation as a multiplier. All devices are TTL compatible, and have full precision outputs (except as noted), plus 3 extended bits.

Product	Size	Multiply-Accumulate Time* (nsec)	Power Dissipation* (watts)	Package	Available	Extended Temperature Range Available	Notes
TDC1008	8×8	100	1.8	J4, C1, L1	Now	−55°C to 125°C	
TDC1009	12×12	135	3.2	J1, C1, L1	Now	−55°C to 125°C	
TDC1010	16×16	165	4.7	J1, C1, L1	Now	−55°C to 125°C	
TDC1043	16×16	100	1.2	J3, C1, L1	Now	3Q83	19-Bit Output
TDC1003**	12×12	225	4.0	J2	Now	No	Two's complement

* Guaranteed, Worst Case, T_A = 0°C to 70°C.

**The older TDC1003 is available to support ongoing production, but offers no advantage over the TDC1009 and is not recommended for new designs.

© IC MASTER 1984

MPY016K
Preliminary Information

VLSI Multiplier
16 X 16 bit, 50 ns

The TRW MPY016K is a video-speed 16 X 16 bit parallel multiplier which operates at a 50-nanosecond cycle time (20-MHz multiplication rate). The multiplicand and the multiplier may be independently specified as two's complement or unsigned magnitude, yielding a full precision 32-bit product.

Individually clocked input and output registers are provided to maximize system throughput and simplify bus interfacing. These registers are positive edge triggered D-type flip-flops. The Most Significant Product (MSP) and Least Significant Product (LSP) can be multiplexed through a dedicated output port, or the LSP can share a bidirectional port with the Y input. All outputs are three state.

Built with TRW's OMICRON-B™ 1-micron bipolar process, the MPY016K is pin compatible with the industry standard MPY016H and operates with three times the speed at comparable power dissipation. The MPY016K is the industry's first true video-speed 16-bit multiplier.

Features

- 50 ns Multiply Time (Worst Case)
- Pin Compatible With TRW MPY016H
- 16 X 16 Bit Parallel Multiplication With 32-Bit Output
- Two Least Significant Product Output Modes: Multiplexed With Most Significant Product Or Multiplexed With Y Input
- Output Registers Can Be Made Transparent
- Three-State TTL Output
- Two's Complement, Unsigned Magnitude, Or Mixed Mode Multiplication
- All Inputs And Outputs Are Registered TTL Compatible
- Proven High-Reliability Radiation Hard Bipolar Process
- Single +5V Power Supply
- Available In 64 Lead Ceramic DIP Or 68 Contact Chip Carrier Or Leaded Chip Carrier
- Available Screened To MIL-STD-883

Applications

- Array Processors
- Video Processors
- Radar Signal Processors
- FFT Processors
- General Purpose Digital Signal Processors
- Microcomputer/Minicomputer Accelerators

Functional Block Diagram

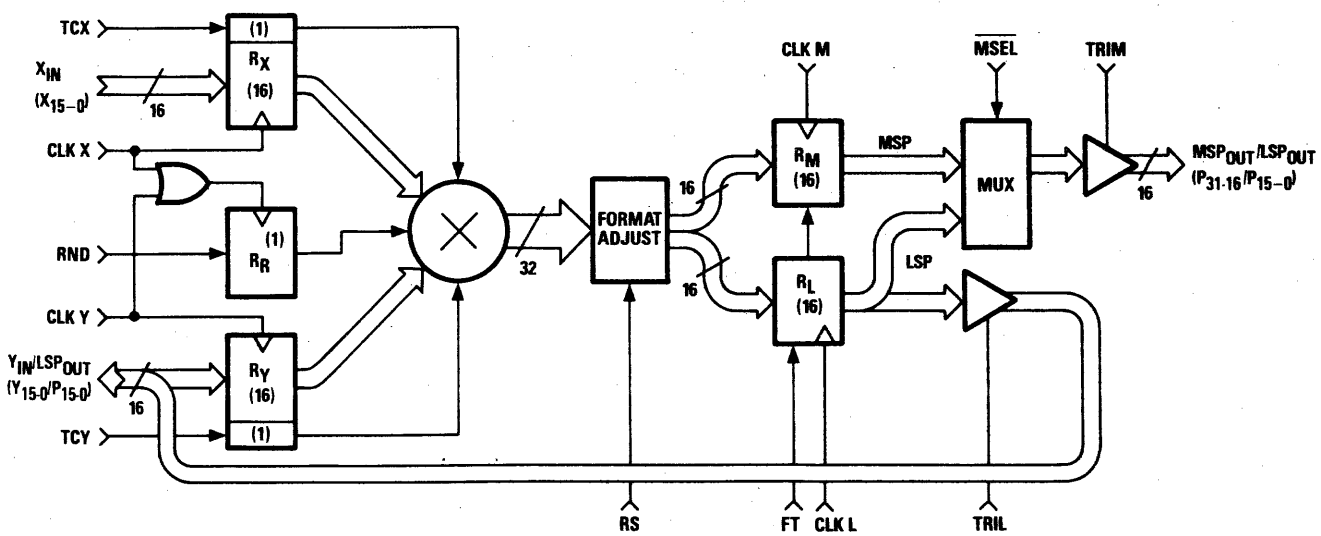

LSI Products Division
TRW Electronic Components Group
P.O. Box 2472
La Jolla, CA 92038

Phone: (619) 457-1000
Telex: 697-957
TWX: 910-335-1571

©TRW Inc. 1983
40G01132 Rev. C-6/83
Printed in the U.S.A.

© IC MASTER 1984

TDC1043
Preliminary Information

VLSI Multiplier-Accumulator
16 X 16 bit, 100 ns

The TRW TDC1043 is a high-speed 16 X 16 bit parallel multiplier-accumulator which operates at a 100-nanosecond cycle time (10-MHz multiplication-accumulation rate). The input data may be specified as two's complement or unsigned magnitude.

Individually clocked input and output registers are provided to maximize system throughput and simplify bus interfacing. These registers are positive-edge-triggered D-type flip-flops. All outputs are three-state.

Built with TRW's OMICRON-B™ 1-micron bipolar process, the TDC1043 is pin-compatible with the industry standard TDC1010, but does not provide the preload and Least Significant Product (LSP) output capabilities of the TDC1010. However, the LSP bits are used internally for accurate accumulation. The TDC1043 operates with almost twice the speed of the TDC1010 at less than one-third the power dissipation.

Features

- 100 ns Multiply-Accumulate Time (Worst Case)
- 16 X 16 Bit Parallel Multiplication With Selectable Accumulation And Subtraction, and 19-Bit Limited Precision Output
- Pin Compatible With TRW TDC1010
- All Inputs And Outputs Are Registered TTL Compatible
- Three-State TTL Output
- Two's Complement Or Unsigned Magnitude Multiplication
- Proven High-Reliability Radiation Hard Bipolar Process
- Single +5V Power Supply
- Available In 64-Lead Ceramic DIP, or 68 Contact Chip Carrier Or 68 Leaded Chip Carrier
- Available Screened To MIL-STD 883

Applications

- Array Processors
- Video Processors
- Radar Signal Processors
- FFT Processors
- General Purpose Digital Signal Processors
- Microcomputer/Minicomputer Accelerators

Functional Block Diagram

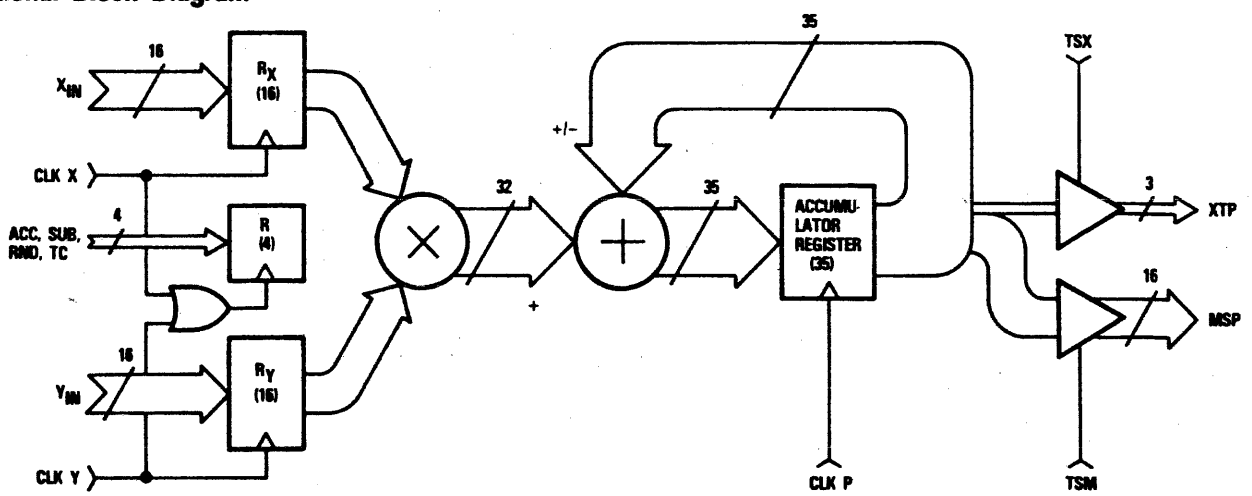

LSI Products Division
TRW Electronic Components Group
P.O. Box 2472
La Jolla, CA 92038

Phone (619) 457-1000
Telex 697-957
TWX 910 335 1571

©TRW Inc. 1983
40G01133 Rev. B-3/83
Printed in the U.S.A.

© IC MASTER 1984

TMC216H
Advance Information

CMOS VLSI Multiplier
16 X 16 bit, 145 ns

The TRW TMC216H is a high-speed 16 x 16 bit parallel multiplier which operates at a 145-nanosecond cycle time (6.9-MHz multiplication rate). The multiplicand and the multiplier may be independently specified as two's complement or unsigned magnitude, yielding a full precision 32-bit product.

Individually clocked input and output registers are provided to maximize system throughput and simplify bus interfacing. These registers are positive-edge triggered D-type flip-flops. The Least Significant Product (LSP) shares a bidirectional port with the Y input. All outputs are three-state.

Built in TRW's state of the art 2-micron CMOS process, the TMC216H is pin and function compatible with the industry standard MPY016H and operates with the same speed at less than one-fifth the power dissipation at full speed.

Features

- 145 ns Multiply Time (Worst Case)
- Low Power CMOS Technology (0.25W Typical)
- Single +5V Power Supply
- Pin And Function Compatible With TRW MPY016H
- All Inputs And Outputs Are Registered TTL Compatible
- Output Registers Can Be Made Transparent
- Three-state TTL Compatible Output
- Two's Complement, Unsigned Magnitude, Or Mixed Mode Multiplication
- Available In 64-Pin Ceramic DIP Or 68-Contact Leaded Or Leadless Chip Carrier

Applications

- Array Processors
- Video Processors
- Radar Signal Processors
- FFT Processors
- General Purpose Digital Signal Processors
- Microcomputer/Minicomputer Accelerators

DIGITAL

TRW LSI Products

Functional Block Diagram

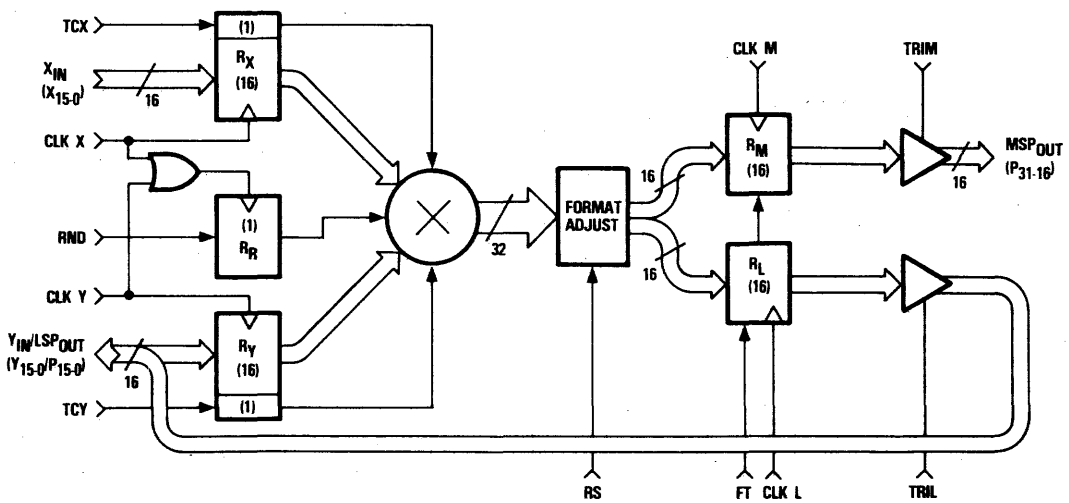

LSI Products Division
TRW Electronic Components Group
P.O. Box 2472
La Jolla, CA 92038

Phone: (619)457-1000
Telex: 697-957
TWX: 910-335-1571

©TRW Inc. 1983
40G01149 Rev. A-3/83
Printed in the U.S.A.

TMC2008
Advance Information

CMOS VLSI Multiplier–Accumulator
8 X 8 bit, 100 ns

The TRW TMC2008 is a high-speed 8 X 8 bit parallel multiplier-accumulator which operates at a 100-nanosecond cycle time (10-MHz multiplication-accumulation rate). The multiplicand and the multiplier may be specified together as two's complement or unsigned magnitude, yielding a full-precision 16-bit product. Products may be accumulated to a 19-bit result. The TMC2008 can also perform subtraction, in which case the outputs are always two's complement numbers, regardless of the input format.

Individually clocked input and output registers are provided to maximize system throughput and simplify bus interfacing. These registers are positive-edge triggered D-type flip-flops. The result is divided into a 3-bit eXTended Product (XTP), an 8-bit Most Significant Product (MSP), and an 8-bit Least Significant Product (LSP). Individual three-state output ports are provided for the XTP, the MSP, and the LSP. The output register can be preloaded directly via the output ports.

Built with TRW's state-of-the-art 2-micron CMOS process, the TMC2008 is pin and function compatible with the industry standard TDC1008; it operates with the same speed, and at less than one-fifth the power dissipation at full speed.

Features

- 100 ns Multiply-Accumulate Time (Worst Case)
- Low Power CMOS Process Technology (150mW Typical)
- Single +5V Power Supply
- 8 X 8 Bit Parallel Multiplication With Accumulation To 19-Bit Result
- Selectable Accumulation, Subtraction, Rounding, And Preloading
- Pin Compatible With TRW TDC1008
- All Inputs And Outputs Are Registered TTL Compatible
- Two's Complement Or Unsigned Magnitude Operation
- Three-State TTL Compatible Output
- Available In 48 Lead Ceramic DIP, 68 Contact Chip Carrier Or 68 Leaded Chip Carrier

Applications

- Array Processors
- Video Processors
- Radar Signal Processors
- FFT Processors
- General Purpose Digital Signal Processors
- Microcomputer/Minicomputer Accelerators

Functional Block Diagram

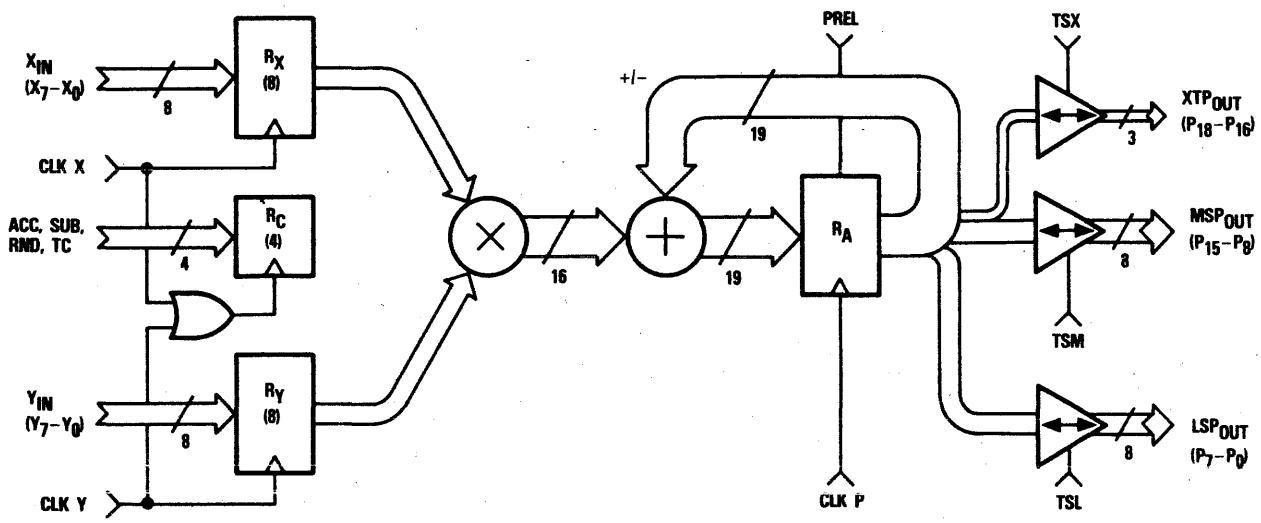

LSI Products Division
TRW Electronic Components Group
P.O. Box 2472
La Jolla, CA 92038

Phone: (619) 457-1000
Telex: 697-957
TWX: 910-335-1571

©TRW Inc. 1983

40G01276 Rev. A-8/83
Printed in the U.S.A.

© IC MASTER 1984

TMC2009
Advance Information

CMOS VLSI Multiplier–Accumulator
12 X 12 bit, 135 ns

The TRW TMC2009 is a high-speed 12 X 12 bit parallel multiplier-accumulator which operates at a 135-nanosecond cycle time (7.4-MHz multiplication-accumulation rate). The multiplicand and the multiplier may be specified together as two's complement or unsigned magnitude, yielding a full-precision 24-bit product. Products may be accumulated to a 27-bit result. The TMC2009 can also perform subtraction, in which case the outputs are always two's complement numbers, regardless of the input format.

Individually clocked input and output registers are provided to maximize system throughput and simplify bus interfacing. These registers are positive-edge triggered D-type flip-flops. The result is divided into a 3-bit eXTended Product (XTP), a 12-bit Most Significant Product (MSP), and a 12-bit Least Significant Product (LSP). Individual three-state output ports are provided for the XTP, the MSP, and the LSP. The output register can be preloaded directly via the output ports.

Built with TRW's state-of-the-art 2-micron CMOS process, the TMC2009 is pin and function compatible with the industry standard TDC1009; it operates with the same speed, and at less than one-fifth the power dissipation at full speed.

Features

- 135 ns Multiply-Accumulate Time (Worst Case)
- Low Power CMOS Process Technology (200mW Typical)
- Single +5V Power Supply
- 12 X 12 Bit Parallel Multiplication With Accumulation To 27-Bit Result
- Selectable Accumulation, Subtraction, Rounding, And Preloading
- Pin Compatible With TRW TDC1009
- All Inputs And Outputs Are Registered TTL Compatible
- Two's Complement Or Unsigned Magnitude Operation
- Three-State TTL Compatible Output
- Available In 64 Lead Ceramic DIP Or 68 Contact Chip Carrier Or 68 Leaded Chip Carrier

Applications

- Array Processors
- Video Processors
- Radar Signal Processors
- FFT Processors
- General Purpose Digital Signal Processors
- Microcomputer/Minicomputer Accelerators

Functional Block Diagram

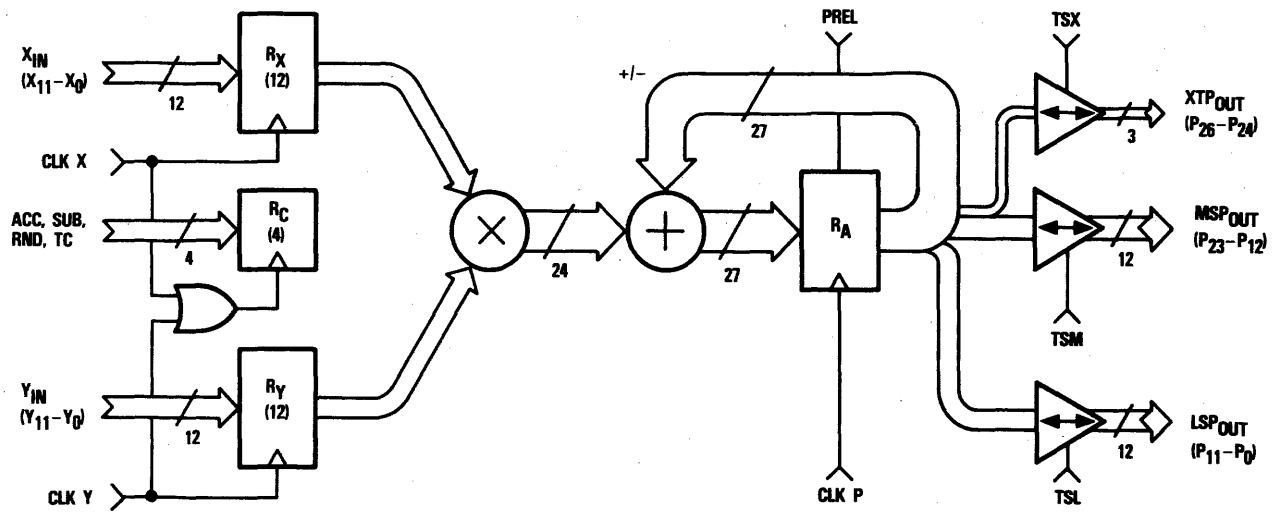

LSI Products Division
TRW Electronic Components Group
P.O. Box 2472
La Jolla, CA 92038

Phone: (619) 457-1000
Telex: 697-957
TWX: 910-335-1571

©TRW Inc. 1983
40G01277 Rev. A-8/83
Printed in the U.S.A.

TMC2010
Advance Information

CMOS VLSI Multiplier-Accumulator
16 X 16 bit, 165 ns

The TRW TMC2010 is a high-speed 16 X 16 bit parallel multiplier-accumulator which operates at a 165-nanosecond cycle time (6-MHz multiplication-accumulation rate). The multiplicand and the multiplier may be specified as both two's complement or both unsigned magnitude, yielding a full-precision 32-bit product. Products may be accumulated to a 35-bit result. The TMC2010 can also perform subtraction, in which case the outputs are always two's complement numbers, regardless of the input format.

Individually clocked input and output registers are provided to maximize system throughput and simplify bus interfacing. These registers are positive-edge triggered D-type flip-flops. The result is divided into a 3-bit eXTended Product (XTP), a 16-bit Most Significant Product (MSP), and a 16-bit Least Significant Product (LSP). Individual three-state output ports are provided for the XTP and the MSP, and the LSP is multiplexed with the Y input. The output register can be preloaded directly via the output ports.

Built in TRW's state of the art 2-micron CMOS process, the TMC2010 is pin and function compatible with the industry standard TDC1010 and operates with the same speed at less than one-fifth the power dissipation at full speed.

Features

- 165 ns Multiply-Accumulate Time (Worst Case)
- Low Power CMOS Process Technology (0.25W Typical)
- Single +5V Power Supply
- 16 X 16 Bit Parallel Multiplication With Accumulation To 35-Bit Result
- Selectable Accumulation, Subtraction, Rounding, And Preloading
- Pin Compatible With TRW TDC1010
- All Inputs And Outputs Are Registered TTL Compatible
- Two's Complement Or Unsigned Magnitude Operation
- Three-State TTL Compatible Output
- Available In 64-Pin Ceramic DIP Or 68-Contact Leaded Or Leadless Chip Carrier

Applications

- Array Processors
- Video Processors
- Radar Signal Processors
- FFT Processors
- General Purpose Digital Signal Processors
- Microcomputer/Minicomputer Accelerators

Functional Block Diagram

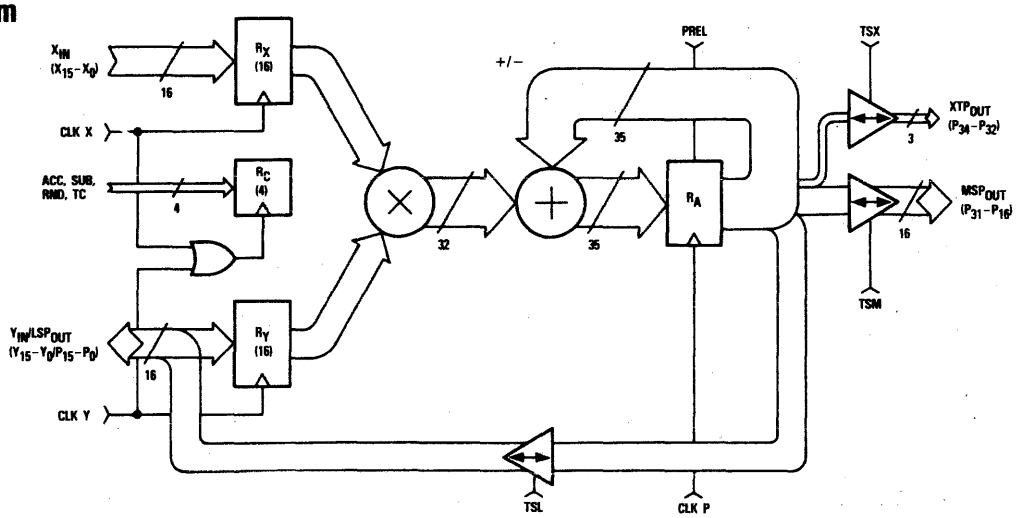

LSI Products Division
TRW Electronic Components Group
P.O. Box 2472
La Jolla, CA 92038

Phone: (619) 457-1000
Telex: 697-957
TWX: 910-335-1571

©TRW Inc. 1983

40G01150 Rev. A-3/83
Printed in the U.S.A.

© IC MASTER 1984

If you need

IC Master Catalog

you need

Integrated Circuits Magazine.

Not only will Integrated Circuits Magazine update your IC Master Catalog...
...it will provide valuable IC application and selection information in every issue.

SUBSCRIBE TODAY!

Subscription card located inside back cover of Volume I or available from publisher upon request.

NEW PRODUCT BULLETIN

Local Network Token Access Controller WD2840

FEATURES

- BROADCAST MEDIUM ORIENTED (COAX, RF, CATV, IR, etc.)
- UP TO 254 NODES
- DUAL DMA/HIGHLY EFFICIENT MEMORY BLOCK CHAINING
- TOKEN BASED PROTOCOL
- ACKNOWLEDGE OPTION ON EACH DATAGRAM
- ADJUSTABLE FAIRNESS, STATIONS MAY BE PRIORITIZED
- FRAME FORMAT SIMILAR TO INDUSTRY STANDARD HDLC
- SUPPORTS GLOBAL ADDRESSING
- DIAGNOSTIC SUPPORT: SELF-TESTS, SYSTEM AND NETWORK
- TTL COMPATIBLE

DESCRIPTION

The WD2840 is a MOS/LSI device intended for local network applications, where reliable data communications over a shared medium is required. The device uses a buffer chaining scheme to allow efficient memory utilization. This scheme minimizes the host CPU time requirements for handling packets of data. The WD2840 frees the host CPU from extensive overhead by performing, network initialization, addressing, coordination, data transmission and acknowledgements, and diagnostics.

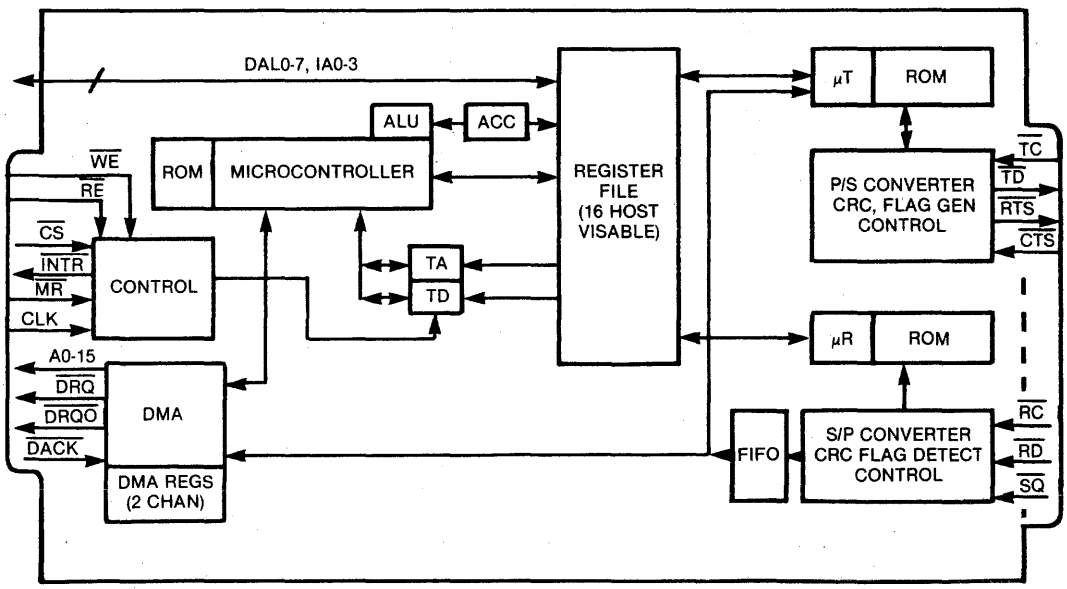

WD2840 BLOCK DIAGRAM

© IC MASTER 1984

APPLICATIONS

The WD2840 is a general purpose Local Network Token Controller applicable to virtually all types of multipoint communications applications. The token protocol allows the sharing of one bus by up to 254 nodes. WD2840's will be designed into process control equipment, micro-computers, mini-computers, personal computers, proprietary micro-processor based applications, intelligent terminals, front-end processors, and similar equipment.

The great advantage for the design engineer is the ease with which he can implement a local network function. The WD2840 handles autonomously all major communications tasks as they relate to the local network function.

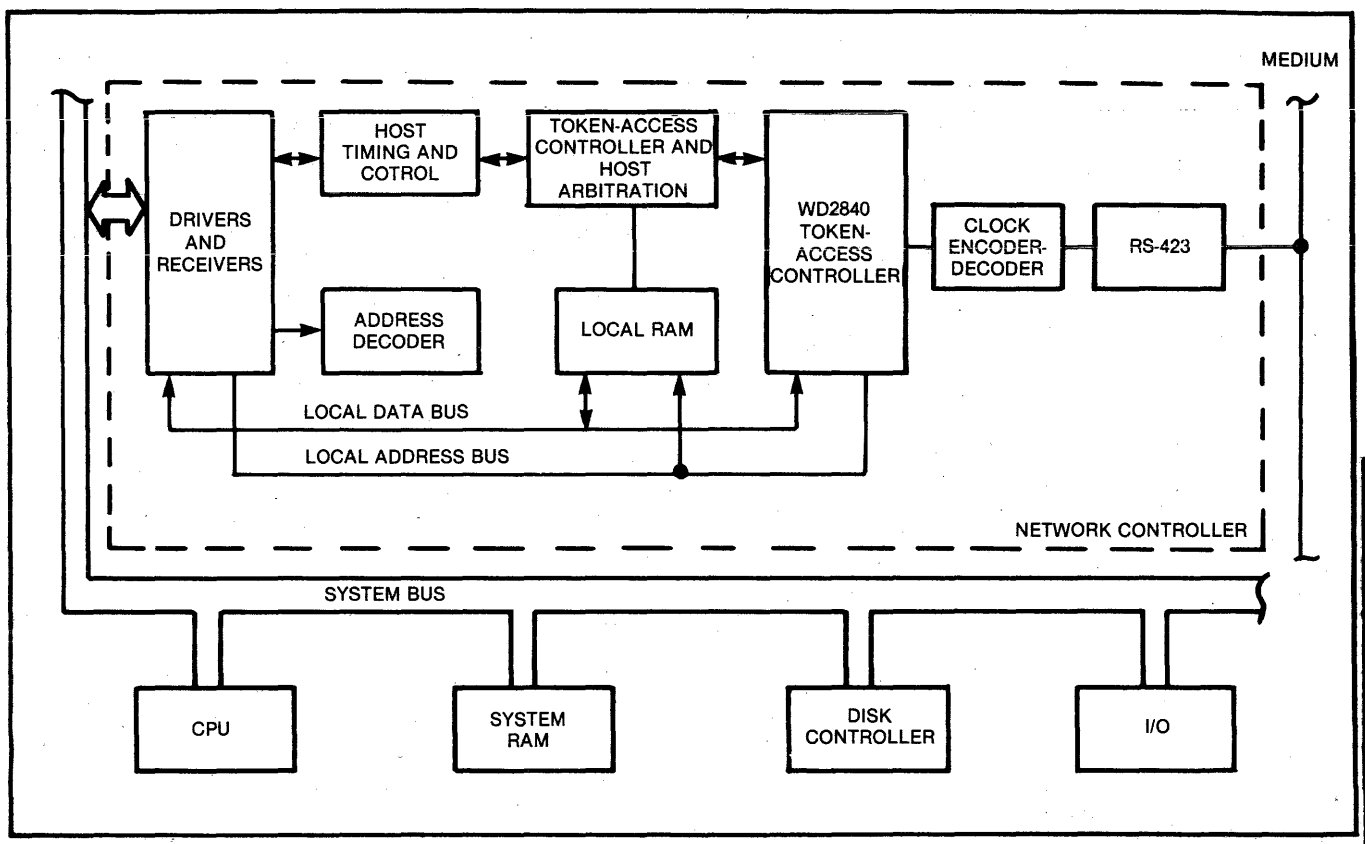

SIMPLIFIED SYSTEM DIAGRAM

WESTERN DIGITAL CORPORATION
2445 McCABE WAY
IRVINE, CALIFORNIA 92714
(714) 863-0102, TWX 910-595-1139

© IC MASTER 1984

NEW PRODUCT BULLETIN

X.25 Protocol Controller WD2511

FEATURES

- PACKET SWITCHING CONTROLLER, COMPATIBLE WITH CCITT RECOMMENDATION X.25, LEVEL 2, LAPB (WD2511)
- PROGRAMMABLE PRIMARY TIMER (T1) AND RETRANSMISSION COUNTER (N2)
- PROGRAMMABLE A-FIELD WHICH PROVIDES A WIDER RANGE OF APPLICATIONS THAN DEFINED BY X.25. THESE INCLUDE: DTE-TO-DTE CONNECTION, MULTIPOINT AND LOOP-BACK TESTING.
- BUILT-IN DUAL CHANNEL DMA FOR BUFFER MANAGEMENT
- ZERO BIT INSERT AND DELETE
- AUTOMATIC APPENDING AND TESTING OF FCS FIELD
- DC TO 1.1 MBPS DATA RATE, FULL DUPLEX OPERATION
- TTL COMPATIBLE
- 48 PIN DUAL IN-LINE PACKAGE
- HIGHER BIT RATES AVAILABLE BY SPECIAL ORDER

DESCRIPTION

The WD2511 is a MOS/LSI device which handles all link level operations of the CCITT X.25 serial data communications standard. This bit oriented controller automatically manages several packet buffers, acknowledges error free packets, and requests error containing packets to be retransmitted. The device will interrupt the host processor after received packets are established to be error free.

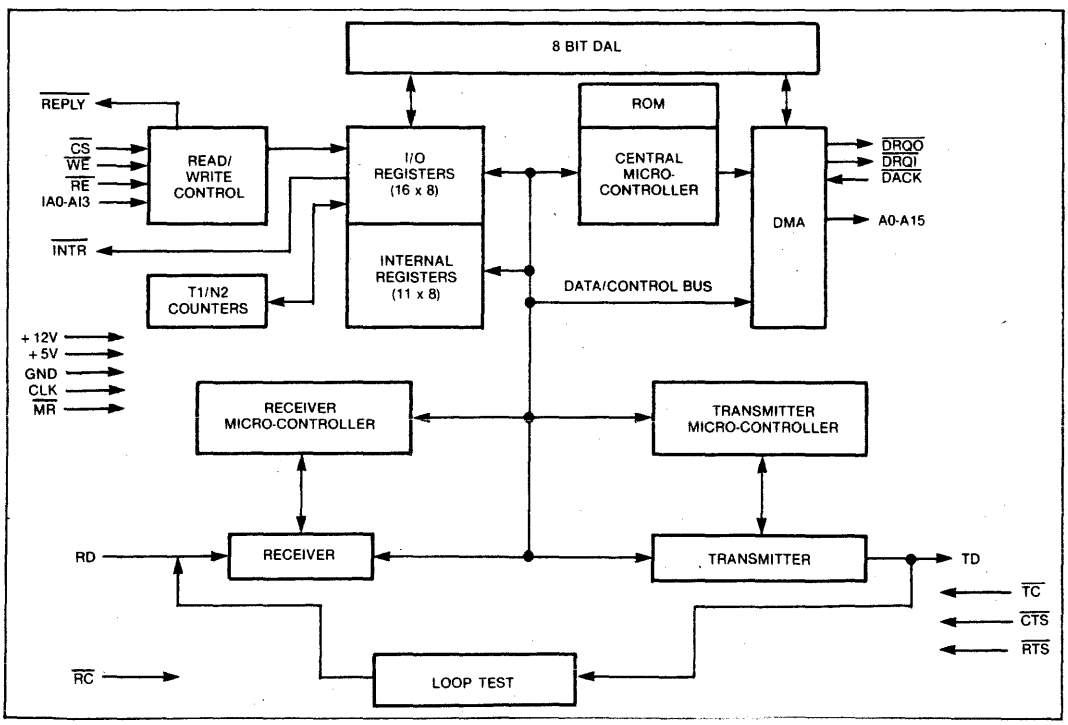

WD2511 BLOCK DIAGRAM

© IC MASTER 1984

APPLICATIONS

Can be used wherever reliable error free point to point or multipoint communications are needed. The WD2511 off loads the host from the responsibility of meeting the realtime requirements of the communications channel. Used as part of DCE or DTE to connect to a public packet switching network. Used in PADS, multiplexers, private packet networks. Use as computer interface to other computers such as computers built by dissimilar manufacturers.

X.25 Packet switching controller
Part of DTE or DCE
Private packet networks
Link level controller

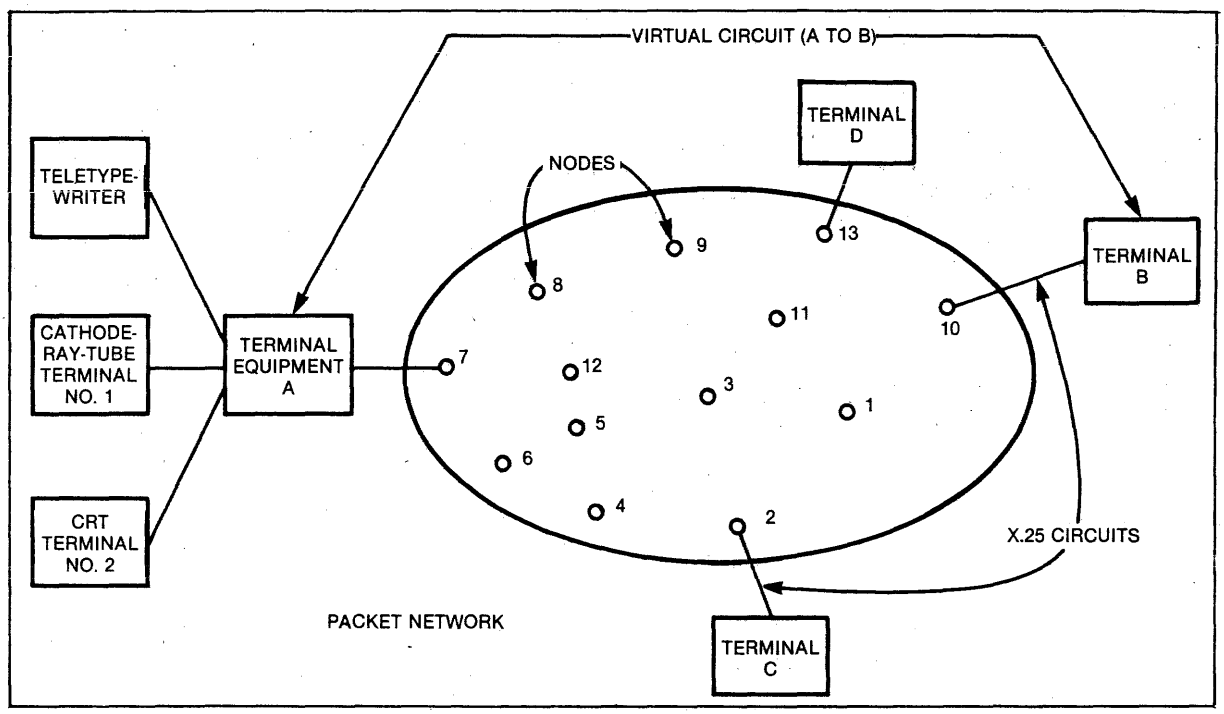

SIMPLIFIED SYSTEM DIAGRAM

WESTERN DIGITAL CORPORATION
2445 McCABE WAY
IRVINE, CALIFORNIA 92714
(714) 863-0102, TWX 910-595-1139

INTRODUCTION TO MICROPROCESSORS

This section begins with a "Master Selection Guide" that covers all major parameters needed to choose a microprocessor for particular application.
Next, once you've chosen the proper microprocessor for your application, go to the "System Components" section. Arranged alphanumerically by microprocessor, it shows all the available peripheral devices that work with a particular microprocessor.
Finally, there is a "General Purpose" section describing devices that can be used in different microprocessor systems, not necessarily with one family.
All manufacturers are covered in alphanumeric sequence.

Detailed Product Information provided by:

Advanced Micro Devices	1401
American Microsystems, Inc.	1448
Fairchild	1454
Harris Semiconductor	1472
Intersil Corporation	1500
Motorola Semiconductor	1501
National Semiconductor	1513
NEC Electronics	1531
Panasonic	1587
RCA	1590
SEEQ Technology	1597
Signetics	1607
Synertek	1696
Texas Instruments	1698
Western Digital	1720
Zilog	1737

The manufacturers listed above have provided detailed information on their latest and most significant products.

© IC MASTER 1984

EINFÜHRUNG MIKRO-PROZESSOREN

Dieser Abschnitt beginnt mit einem "Master Selection Guide", der alle Parameter enthält, die zur Auswahl eines für einen bestimmten Anwendungsfall geeigneten Mikroprozessors erforderlich sind.

Haben Sie einmal den für Ihren Anwendungsfall geeigneten Mikroprozessor gefunden, so gehen Sie weiter zum Abscnitt "Systemkomponenten" (System Components). In alphanumerischer Reihenfolge der Mikroprozessoren, enthält dieser Teil alle peripheren Bausteine, die für einen bestimmten Mokroprozessor verfügbar sind.

Schließlich gibt es noch den Abschnitt "Allgemeine Verwendung" (General Purpose) mit einer Beschreibung von Bauelementen, die für verschiedene Mikroprozessoren geeignet und nicht ausschließlich an ein System gebunded sind.

Alle Hersteller sind in alphanumerischer Reihenfolge aufgeführt.

© IC MASTER 1984

INTRODUCTION AUX MICRO-PROCESSEURS

Cette Section débute par un Guide Général de Sélection qui couvre tous les paramètres importants utilisés dans le choix d'un microprocesseur pour une application bien déterminée.

Après avoir choisi le microprocesseur nécessaire à votre application, reportez-vous à la Section "Composants du Système (System Components). Une liste alphanumérique des microprocesseurs indique quels types d'appareils sont à utiliser avec tel ou tel microprocesseur.

Enfin, une Section intitulée "Applications Générales" ((General Purpose) décrit les appareils qui peuvant être utilisée dans différents systèmes de microprocesseur, et n'appartenent pas uniquement à une sule famille.

Toutes les sociétés fabricantes sont étudiées par ordre alphanumérique.

© IC MASTER 1984

INTRODUCCIÓN AL MICROPROCESOR

Esta sección empieza con una Guía Maestra de Selección que cubre los parámetros necesitados en la selección del microprocesor para una aplicación determinada.

Después, una vez escogido el microprocesor para su aplicación, refiérase a la sección "Componentes de Sistema." Arreglado en orden alfabético y numérico por microprocesor, muestra todas las componentes periferales que funcionan con un microprocesor determinado.

Finalmente, hay una sección de "Propósito General" describiendo las componentes que pueden ser usadas en distintos sistemas de microprocesores, no necesariamente dentro de una familia.

Todos los fabricantes aparencen en orden alfabético y numérico.

© IC MASTER 1984

マイクロプロセサーへの案内

このセクションは"マスターセレクションガイド"で始り利用者皆様のお知りになり度いマイクロプロセサーを選択するのに必要な全ての主要パラメーターを記載しています。そのマイクロプロセサーを見つけたら次に"システムコンポーネント"セクションに進んで下さい。マイクロプロセサーがアルファベット順，数字の若い順に並んでおり，そのマイクロプロセサーの周辺製品が記載されています。

最后は"ジェネラルパーパスセクション"であり，一つのマイクロプロセサーファミリー丈でなく他のマイクロプロセサーシステムにも使用される製品を紹介しています。全てのメーカーはアルファベット順，若い数字順にのっています。

© IC MASTER 1984

Integrated Circuits Magazine
The magazine for the engineering design strategist*

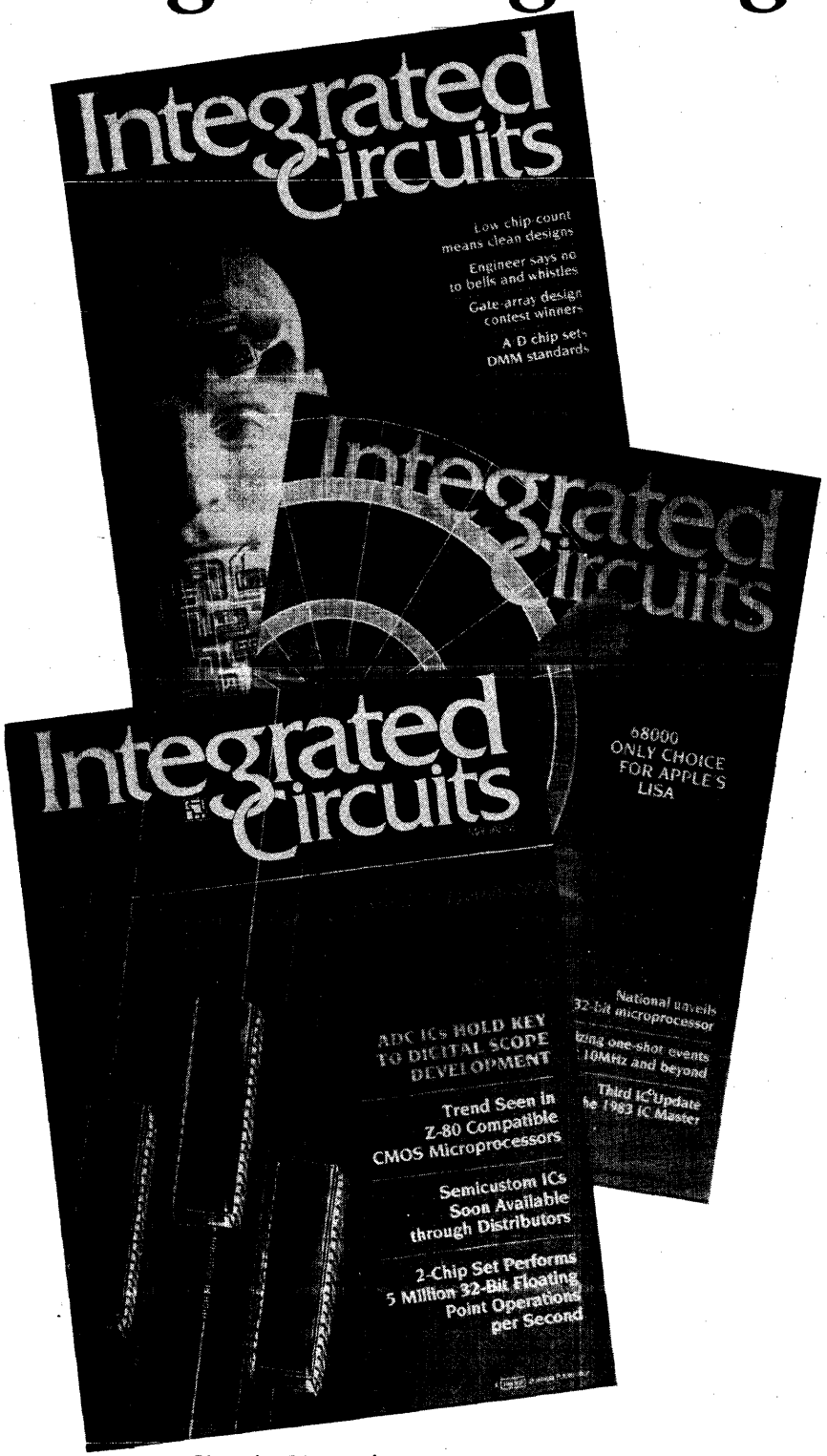

Integrated Circuits Magazine is the only publication written for senior design engineers and engineering managers who specialize in the specifying and use of ICs and related components in the design of instruments, equipment and systems.

It is unique in that it concentrates on reporting *from the viewpoint of the user.*

Each issue of *Integrated Circuits Magazine* includes staff-written interviews with leading designers at major IC customers, as well as articles written by IC users themselves.

Regular features include: IC User Feedback Reports, Semicustom Design Techniques, IC Design Problems and Solutions. What's New in ICs, and much more.

To receive *Integrated Circuits Magazine* absolutely FREE† simply give us your authorization right now! Just fill out, sign, date and return the subscription card located inside the back cover of Volume I.

Card missing? Additional subscription cards available from publisher upon request.

Integrated Circuits Magazine is designed for *YOU.*

**Designers who must keep pace with contemporary engineering design techniques, practices and trends, and how they affect the selection and application of integrated circuits, microcomputers, boards, and systems.*

†Integrated Circuits Magazine is made available on a complimentary basis to those qualified recipients within the United States only.

Canadian and Foreign Subscriptions are available, prepaid by check or money order payable in United States currency, at the following rates: $35.00 per year Canadian/Foreign; $55.00 per year Foreign via Air Mail; $18.00 per year non-qualified Domestic United States.

Integrated Circuits Magazine
Circulation Department
645 Stewart Ave.
Garden City, NY 11530
(516) 222-2500
TWX: 510-222-1673

MICROPROCESSORS

General				Architecture										Hardware Support	
							(For Microcomputers Only)								
Data Word Size (bits)	Process Type	Supply Voltage (V)	No. of Pins	Instruction Word Size (bits)	Directly Addressable Memory (words)	No. of Basic Instructions	On-Chip RAM (bits)	On-Chip (P)ROM (bits)	DMA Capa-bility	Maximum Clock Frequency (MHz)	Instruction Time Min/Max (μs)	Interrupts	No. of Levels	Proto-typing System	In-Circuit Emulator
2BS	TTL	5	40	≥18	512	512				6	45	opt.			
2BS	TTL	5	40	18	512	512				6	45	opt.			
4BS	TTL	5	40	9	User defined	16				10	115	opt.		x	
4BS	TTL/ECL	5		9	User defined	512				10		opt.		x	
4BS	TTL	5	48	4xN	User defined	16				8	174	opt.		x	
4BS	TTL	5	48	4xN	User defined	16				8	174	opt.		x	
4BS	TTL	5		3						14		opt.		x	
4BS	CMOS	3-15		4						4.9		no			
4BS	ECL	-2,-5.2		4		16								x	
4BS	ECL	-2,-5.2		8		16				10		opt.			
4BS	TTL	5	40	9	User defined					10		opt.		x	
4BS	TTL	5	40	9	User defined					10		opt.		x	
4BS	TTL-LS	5	48	10	4XN					8	0.12			x	
4BS	TTL-S	5	48	10	4XN					10	0.10			x	
4	CMOS	5	16	8,16	512	72	16x4	512x8		2	3	yes		x	x
4	CMOS	5	16	8,16	1024	72	32x4	1Kx8		2	3	yes		x	x
4	NMOS	5	42	8,16	4K	72	192x4	4Kx8		2	3	yes		x	x
4	NMOS	5	42	8,16	2K	72	128x4	2Kx8		2	3	yes		x	x
4	NMOS	5	42	8,16	4K	72	192x4	4Kx8		2	3	yes		x	x
4	NMOS	5	42	8,16	2K	72	192x4	2Kx8		2	3	yes		x	x
4	NMOS	5	28	8,16	2K	72	128x4	2Kx8		2	3	yes		x	x
4	NMOS	5	64	8,16	4K	72	192x4	4Kx8		2	3	yes		x	x
4	NMOS	5	64	8,16	2K	70	128x4	2Kx8		2	3	yes		x	x
4	NMOS	5	42	8,16	1K	70	64x4	1Kx8		2	3	yes		x	x
4	NMOS	5	28	8,16	1K	70	64x4	1Kx8		2	3	yes		x	x
4	CMOS	5,3.5-6	42	8,16	4K	70	192x4	4Kx8		2	3	yes		x	x
4	CMOS	5,3.5-6	42	8,16	2K	70	128x4	2Kx8		2	3	yes		x	x
4	CMOS	5	42	8,16	1K	70	64Kx4	1Kx8		2	3	yes		x	x
4	CMOS	3.5-6	42	8,16	2K	70	128x4	2Kx8		2	3	yes		x	x
4	CMOS	2.5-3.5	42	8,16	2K	70	128x4	2Kx8		2	3	yes		x	x
4	CMOS	5	42	8,16	1K	70	64Kx4	1Kx8		2	3	yes		x	x
4	CMOS	5	42	8,16	2K	72	128x4	2Kx8		2	3	yes		x	x
4	CMOS	5	42	8,16	2K	72	128x4	2Kx8		2	3	yes		x	x
4	CMOS	5	28	8,16	1K	72	64x4	1Kx8		2	3	yes		x	x
4	CMOS	5	70	8,16	4K	72	196x4	4Kx8		2	3	yes		x	x
4	CMOS	3.5-6	28	8,16	1K	72	64x4	1Kx8		2	3	yes		x	x
4	CMOS	2.5-3.5	28	8,16	1K	72	64x4	1Kx8		2	3	yes		x	x
4	CMOS	5	80	10		71	256x4	2.1Kx10		0.5	10	no		x	

Bold face indicates additional data is provided on the page noted.

© IC MASTER 1984

MICROPROCESSORS

Software Support									
		Programs							
Cross Assembler	High Level Language	Debug	Diagnostic	Edit	Alternate Sources	Comments	Device	Source	Line
						Use 74S182 for look-ahead carry and N3001 microprogram control unit.	N3001	Signetics (1663)	
						Use 74S182 for look-ahead carry and N3001 microprogram control unit.	N3002	Signetics (1665)	
x					Fairchild, National, NEC, Raytheon		AM2901B	AMD (1401)	
x					Fairchild, NEC, National, Raytheon	Eight function ALU. Four status flags. Microprogrammable. Interrupt requires AM2914 chip. 25% faster than AM2901B.	AM2901C	AMD (1401)	
x					Fairchild, NEC, National, Raytheon	Expandable register file. Built-in normalization and division logic. Built-in parity generation.	AM2903	AMD (1402)	5
x					Fairchild, NEC, National, Raytheon	Automatic BCD add, subtract and conversion between binary and BCD. Improved byte handling.	AM29203	AMD (1402)	
						Hardware stack with 9406, 10-Bit sequencer with 9408.	Macrologic Bipolar	Fairchild	
							Macrologic CMOS	Fairchild	
							MC10800	Motorola	
					AMD, Fairchild, National, Raytheon		MC10902	Motorola (4796)	10
					AMD, Fairchild, Motorola, NEC, Raytheon	Interrupt capability requires peripheral chip.	IDM2901A-2	National	
x					AMD, Fairchild, Motorola, National, NEC	Microassembler on timeshare.	2901	Raytheon	
						24,780 Micro- and Macro-instructions.	SN74LS481	TI (1041)	
						24,780 Micro- and Macro-instructions.	SN74S481	TI (1041)	
x						Low cost, 12 I/O ports, TTL/CMOS compatible.	MB88201	Fujitsu	15
x						Low cost, 12 I/O ports, TTL/CMOS compatible.	MB88202	Fujitsu	
x						36 I/O ports, TTL/CMOS compatible, on board PLA.	MB88401	Fujitsu	
x						37 I/O ports, TTL/CMOS compatible.	MB8841	Fujitsu	
x						32 I/O ports, TTL/CMOS compatible, 8 bit A/D.	MB88411	Fujitsu	
x						32 I/O ports, TTL/CMOS compatible, 8 bit A/D.	MB88413	Fujitsu	20
x						23 I/O ports, TTL/CMOS compatible.	MB8842	Fujitsu	
x						57 I/O ports, TTL/CMOS compatible, watch dog timer, power down detect.	MB88421	Fujitsu	
x						57 I/O ports, TTL/CMOS compatible, watch dog timer, power down detect.	MB88423	Fujitsu	
x						37 I/O ports, TTL/CMOS compatible.	MB8843	Fujitsu	
x						23 I/O ports, TTL/CMOS compatible.	MB8844	Fujitsu	25
x						Other Vcc ranges available, 36 I/O ports TTL/CMOS compatible.	MB88501	Fujitsu	
x						Other Vcc ranges available, 36 I/O ports TTL/CMOS compatible.	MB88503	Fujitsu	
x						37 I/O ports, TTL/CMOS compatible.	MB8851	Fujitsu	
x						37 I/O ports, TTL/CMOS compatible.	MB8851A	Fujitsu	
x						37 I/O ports, TTL/CMOS compatible.	MB8851L	Fujitsu	30
x						37 I/O ports, TTL/CMOS compatible.	MB8853	Fujitsu	
x						6 bit 3 Channel D/A, 34 I/O ports, TTL/CMOS compatible.	MB88535	Fujitsu	
x						6 bit 3 Channel, 13 bit 1 CHL D/A, 34 I/O ports, TTL/CMOS compatible.	MB88536	Fujitsu	
x						23 I/O ports, TTL/CMOS compatible.	MB8854	Fujitsu	
x						LCD driver, 29 I/O ports, TTL/CMOS compatible.	MB88541	Fujitsu	35
x						23 I/O ports, TTL/CMOS compatible.	MB8854A	Fujitsu	
x						23 I/O ports TTL/CMOS compatible.	MB8854L	Fujitsu	
x						2 5-bit A/D converters, drives dot matrix LCDs.	HD4470	Hitachi	

MICROPROCESSORS

General				Architecture										Hardware Support	
							(For Microcomputers Only)								
Data Word Size (bits)	Process Type	Supply Voltage (V)	No. of Pins	Instruction Word Size (bits)	Directly Addressable Memory (words)	No. of Basic Instructions	On-Chip RAM (bits)	On-Chip (P)ROM (bits)	DMA Capa-bility	Maximum Clock Frequency (MHz)	Instruction Time Min/Max (μs)	Interrupts	No. of Levels	Proto-typing System	In-Circuit Emulator
4	CMOS	5	80	10		71	160x4	2.1Kx10		0.5	10	yes	2	x	
4	PMOS	-10	28	10	512	51	32x4	512x10		0.5	10/20	no		x	x
4	CMOS	5	28	10	512	51	32x4	512x10		0.5	10/20	no		x	x
4	PMOS	-10	42	10	1024	71	80x4	1Kx10		0.5	10/20	yes	2	x	x
4	CMOS	5	42	10	1024	71	80x4	1Kx10		0.5	10/20	yes	2	x	x
4	PMOS	-10	42	10	2048	71	160x4	2Kx10		0.5	10/20	yes	2	x	x
4	CMOS	5	42	10	2048	71	160x4	2Kx10		0.5	10/20	yes	2	x	x
4	PMOS	-10	54	10	2048	71	160x4	2Kx10		0.5	10/20	yes	2	x	x
4	CMOS	5	54	10	2048	71	160x4	2Kx10		0.5	10/20	yes	2	x	x
4	CMOS	5	54	10	2K	71	160x4	4Kx10		0.5	10/20	yes		x	
4	CMOS	5	42	10	2K	71	160x4	4Kx10		0.5	10/20	yes		x	
4	CMOS	1.4-2.0	54	9	1024					0.0327		yes		x	x
4	PMOS	6-9.5		9	1024					0.5		no		x	x
4	NMOS	4.5-6.3	48	8	2K		160x4	.25/1			4/10	yes	4/CPU	x	x
4	NMOS	4.5-6.3	40	8	2048	60	160x4	2048		0.25	8/16	yes	4/CPU	x	x
4	NMOS	4.5-6.3	40	8	2048	60	160x4	See comments		0.25	8/16	yes	4	x	x
4	NMOS	4.5-6.3	28	8	2048	60	160x4	2048		0.25	8/16	yes	4/CPU	x	x
4	NMOS	4.5-6.3	24	8	2048	60	160x4	2048		0.25	8/16	yes	4/CPU	x	x
4	NMOS	4.5-6.3	40	8	1K	49	64x4	See comments		4	4/10	yes	3	x	x
4	NMOS	4.5-6.3	40	8	1K	49	64x4	See comments		4	4/10	no		x	x
4	NMOS	4.5-9.5	40	8	2K	49	128x4	See comments		2.1	16/40	yes	3	x	x
4	NMOS	4.5-9.5	40	8	2048	49	128x4	See comments		2.1	16/40	yes	3	x	x
4	CMOS	2.4-6.0	24	8	512	40	32x4	512		0.25	4/dc	no		x	x
4	NMOS	4.5-6.3	24	8	512	40	32x4	512		0.25	15/40	no		x	x
4	CMOS	2.4-6.0	20	8	512	40	32x4	512		0.25	4/dc	no		x	x
4	NMOS	4.5-6.3	20	8	512	40	32x4	512x8		0.25	15/40	no	2	x	x
4	NMOS	4.5-6.3	28	8	1K	49	64x4	1Kx8		2.1	4/10	yes	3	x	x
4	NMOS	4.5-9.5	28	8	1K	49	64x4	1Kx8		2.1	4/dc	yes	3	x	x
4	NMOS	4.5-6.3		8	1K	49	64x4	1Kx8		2.1		yes	3	x	x
4	CMOS	3-5	28	8	1K		64x4	1Kx4		4	4/dc	yes		x	x
4	CMOS	3-5	24	8	1K		64x4	1Kx4		4	4/dc	yes		x	x
4	NMOS	4.5-6.3	40	8	2K	49	160x4	2Kx8		1.0	4/10	yes	4	x	x

Bold face indicates additional data is provided on the page noted.

© IC MASTER 1984

MICROPROCESSORS

Software Support									
		Programs							
Cross Assembler	High Level Language	Debug	Diagnostic	Edit	Alternate Sources	Comments	Device	Source	Line
x						Drives seven segment LCDs, on chip counter timer. 32 I/O lines.	HD44790	Hitachi	
x		x	x	x			HMCS42	Hitachi	
x		x	x	x		CMOS HMCS42.	HMCS42C	Hitachi	
x		x	x	x		On chip counter.	HMCS43	Hitachi	
x		x	x	x		CMOS HMCS43.	HMCS43C	Hitachi	5
x		x	x	x		On chip counter.	HMCS44A	Hitachi	
x		x	x	x		CMOS HMCS44A.	HMCS44C	Hitachi	
x		x	x	x		On chip counter.	HMCS45A	Hitachi	
x		x	x	x			HMCS45C	Hitachi	
x						Enlarged ROM version of HMC543C, 32 I/O lines.	HMCS46C	Hitachi	10
x						Enhanced I/O version of HMC54C, 44 I/O lines.	HMCS47C	Hitachi	
		x		x		Display processor on chip which formats, decodes, and displays. Up to 128 duplex LCD drivers capability with 58 on chip in present configuration. 4 programmable inputs.	M1001	Monosil	
		x		x		On chip display processor controls 8 digit LED multiplexed display. 2-4 bit I/O ports, 1-4 bit input port, 1-4 bit output port.	M1111	Monosil	
x		x	x	x		Same as COP2440 except no on chip ROM and faster execution time (4μs). Interfaces with MM2716 EPROM. COP2304 is extended temperature range device.	COP2404	National	
x					Eurotechnique	Dual CPU microcontroller, programmable counter, zero crossing detector serial I/O port. 35 I/O lines, COP23XX extended temperature range.	COP2440	National	15
x		x	x	x		Piggyback Microcontroller. Same as COP2440 except socket for development EPROM.	COP2440R	National	
x					Eurotechnique	Same as COP2440 except 23 I/O lines.	COP2441	National	
x					Eurotechnique	Same as COP2440 except 19 I/O lines.	COP2442	National	
x		x	x	x	Western Digital	Has piggyback EPROM socket. Will accept: MM2716, NM27C16, MM2758A, MM2758B. 1K byte accessable.	COP402	National	
x		x	x	x	Western Digital	Has piggyback EPROM socket. Will accept: MM2716, NM27C16, MM2758A, MM2758B. 1K byte accessable.	COP402M	National	20
x		x	x	x	Western Digital	Has piggyback EPROM socket. Will accept MM2716, 2758A, 2758B or NM27C16 EPROM. 2K Byte accessable. Open drain memory interface drivers.	**COP404LP**	**National**	**(1525)**
x		x	x	x	Western Digital	Same as COP404LP except push pull memory interface drivers.	**COP404LS**	**National**	**(1525)**
x		x	x	x		4μs instruction cycle time, 20 I/O lines, 2 level subroutine stack, COP310C operates extended temperature range, COP210C operates full temperature range.	**COP410C**	**National**	**(1526)**
x		x	x	x	Eurotechnique, Western Digital	16 I/O lines, 24 pins, COP310L has extended temperature range (-40°C to -85°C).	**COP410L**	**National**	**(1526)**
x		x	x	x		4μs instruction cycle time, 16 I/O lines, 2 level subroutine stack, COP311C operates extended temperature range, COP211C operates full temperature range.	**COP411C**	**National**	**(1526)** 25
x		x	x	x	Eurotechnique, Western Digital	13 I/O lines, 20 pins, COP311L has extended temperature range (-40°C to -85°C).	**COP411L**	**National**	**(1526)**
x		x	x	x	Eurotechnique, Western Digital	COP32X is extended temperature range version. Also available in smaller packages: COP421 series-24 pins, COP422 series-20 pins.	COP420	National	
x		x	x	x	Eurotechnique, Western Digital	Same as COP420 except 23 I/O lines.	COP420L	National	
x		x	x	x		Basically the same as COP420 except piggyback microcontroller. CPU, RAM, I/O and EPROM socket. Accepts: MM2716, NMC27C16, MM2758A, MM2758B. 1K byte accessable.	COP420R	National	
x		x	x	x		23 I/O lines. COP324C has extended temperature range (-40°C to 85°C).	**COP424C**	**National**	**(1527)** 30
x		x	x	x		COP424C less 4 general-purpose inputs.	**COP425C**	National	**(1527)**
x		x	x	x	Eurotechnique	CPU version of COP2440 series, COP340 is extended temperature range version. 40 pins. 35 I/O lines.	COP440	National	

MICROPROCESSORS

General				Architecture										Hardware Support	
							(For Microcomputers Only)								
Data Word Size (bits)	Process Type	Supply Voltage (V)	No. of Pins	Instruction Word Size (bits)	Directly Addressable Memory (words)	No. of Basic Instructions	On-Chip RAM (bits)	On-Chip (P)ROM (bits)	DMA Capa-bility	Maximum Clock Frequency (MHz)	Instruction Time Min/Max (μs)	Interrupts	No. of Levels	Proto-typing System	In-Circuit Emulator
4	NMOS	4.5-6.3	40	8	2K	49	160x4	2Kx8			4/10	yes	4	x	x
4	NMOS	4.5-6.3	28	8	2K		160x4	2Kx8			4/10	yes	4	x	x
4	NMOS	4.5-6.3	24	8	2K		160x4	2Kx8			4/10	yes	4	x	x
4	CMOS	3-5	28	8	2K		128x4	2Kx4		4	4/dc	yes		x	x
4	NMOS	4.5-6.3	28	8	2K	49	128x4	2Kx8		2.1	15/40	yes	3	x	x
4	NMOS	4.5-6.3	28	8	2K	49	128x4	2Kx8		2.1	15/40	yes	3	x	x
4	CMOS	3-5	24	8	2K		128x4	2Kx4		4	4/dc	yes		x	x
4	NMOS	4.5-6.3	24	8	2K	49	128x4	2Kx8		2.1	15/40	no	3	x	x
4	CMOS	5		8			96x4 max	2000 max		0.44		yes		x	
4	PMOS	-6 to -10		8	750		48x4	768		0.3				x	
4	CMOS	3-6	42	8	—	98	128x4	—		2	16	yes	2	x	x
4	CMOS	3-6	42	8	2K	98	128x4	2Kx8		2	16	yes	2	x	x
4	CMOS	4-6	60	8	1536	52	40x4	1536x8		4	8/16	no		x	x
4	CMOS	5	40	8	1536	52	32x4	1280x8		4	8/16	no		x	x
4	CMOS	3-6	42	8	1280	49	64x4	1280x8		4	8/16	yes	2	x	x
4	NMOS	5	40	8	1024	75	64x4	1024		0.45	10/20	yes	1		
4	NMOS	5	28	8	768	57	32x4	768		0.45	10/20	yes	1	x	x
4	NMOS	5	18	8	512	50	16x4	512		0.45	10/20	yes	1	x	x
4	NMOS	5	16	8	512	48	16x4	512		0.45	10/20	yes	1	x	x
4	NMOS	5	40	8	2048	75	128x4	2048		0.45	10/20	yes	2	x	x
4	PMOS	-15	40	8	1024	75	64x4	1024		0.3	15/30	yes	1	x	x
4	PMOS	-15	28	8	768	57	32x4	768		0.3	15/30	yes	1	x	x
4	PMOS	-15	40	8	2048	75	128x4	2048		0.3	15/30	yes	2	x	x
4	CMOS	5	40	8	1024	75	64x4	1024		0.5	10/20	yes	1	x	x
4	CMOS	5	18	8	512	50	16x4	512x8		0.5	10/20	yes	1	x	x
4	CMOS	5	16	8	512	48	16x4	512x8		0.5	10/20	yes	1	x	x
4	CMOS	5	40	8	2K	75	128x4	2Kx8		0.5	10/20	yes	1	x	x
4	NMOS	5	40	8	1K	68	64x4			0.45	10/20	yes	1	x	x
4	NMOS	5	64	8	2K	75	64x4			0.45	10/20	yes	1	x	x
4	NMOS	5	64	8	2K	75	128x4			0.45	10/20	yes	1	x	x

Bold face indicates additional data is provided on the page noted.

© IC MASTER 1984

MICROPROCESSORS

Software Support									
		Programs							
Cross Assembler	High Level Language	Debug	Diagnostic	Edit	Alternate Sources	Comments	Device	Source	Line
x		x	x	x		Piggyback Microcontroller: CPU, RAM, I/O and EPROM socket. Accepts: MM2716, NMC27C16, MM2758A, MM27588 EPROMs. Same electrical specs as base P/N.	COP440R	National	
x		x	x	x	Eurotechnique	CPU version of COP2440 series, COP341 is extended temperature range version. 28 pins. 23 I/O lines.	COP441	National	
x		x	x	x	Eurotechnique	CPU version of COP2440 series, COP342 is extended temperature range version. 24 pins. 19 I/O lines.	COP442	National	
x		x	x	x		23 I/O Lines. COP344C has extended temperature range (-40°C to 85°C).	COP444C	National (1527)	
x		x	x	x	Eurotechnique, Western Digital	28 pins, 16 I/O lines.	COP444L	National (1527)	5
x		x	x	x		Piggyback Microcontroller: CPU, RAM, I/O and EPROM socket. Accepts: MM2716, NMC27C16, MM2758A, MM27588 EPROMs. Same electrical specs as base P/N.	COP444LR	National (1527)	
x		x	x	x		COP444C less 4 general-purpose inputs.	COP445C	National (1527)	
x		x	x	x	Eurotechnique, Western Digital	24 pin package, no interrupt, 12 I/O lines.	COP445L	National (1527)	
x						μCOM-4 single chip microprocessor family. Consists of 14 individual devices with various RAM, ROM, I/O subroutine stack level options.	uCOM-4	NEC	
x						Directly drives 8 digit, 8 segment LED display, 24 I/O lines.	μPD7520	NEC (1578)	10
x		x	x	x		Evaluator chip for Series 40 microcomputers.	MSM5840	OKI (4118)	
x		x	x	x		30 I/O lines, 8-Bit programmable timer.	MSM5840RS	OKI (4118)	
x		x	x	x		13 I/O lines, 40 LCD segment outputs, 12-bit timer.	MSM58421GS	OKI (4118)	
x		x	x	x		9 I/O lines, 24 Vacuum Fluorescent segment outputs, 8-bit timer.	MSM584223RS	OKI	
x		x	x	x		30 I/O lines, 8-bit timer/counter.	MSM5845	OKI (4118)	15
x		x	x	x			MN1400	Panasonic (1587)	
x		x	x	x		All the MN14XX series members are available in at least one other process type.	MN1402	Panasonic (1587)	
x		x	x	x		All the MN14XX series members are available in at least one other process type.	MN1403	Panasonic (1587)	
x		x	x	x		All the MN14XX series members are available in at least one other process type.	MN1404	Panasonic (1587)	
x		x	x	x		All the MN14XX series members are available in at least one other process type.	MN1405	Panasonic (1587)	20
x		x	x	x		All the MN14XX series members are available in at least one other process type.	MN1430	Panasonic (1587)	
x		x	x	x		All the MN14XX series members are available in at least one other process type.	MN1432	Panasonic (1587)	
x		x	x	x		All the MN14XX series members are available in at least one other process type.	MN1435	Panasonic (1587)	
x		x	x	x		All the MN14XX series members are available in at least one other process type.	MN1450	Panasonic (1588)	
x		x	x	x		All the MN14XX series members are available in at least one other process type.	MN1453	Panasonic (1588)	25
x		x	x	x		All the MN14XX series members are available in at least one other process type.	MN1454	Panasonic (1588)	
x		x	x	x		All the MN14XX series members are available in at least one other process type.	MN1455	Panasonic (1588)	
x		x	x	x		All the MN14XX series members are available in at least one other process type.	MN1498	Panasonic (1588)	
x		x	x	x		All the MN14XX series members are available in at least one other process type.	MN1499	Panasonic (1587,1588)	
x		x	x	x		All the MN14XX series members are available in at least one other process type.	MN1499A	Panasonic (1587,1588)	30

MICROPROCESSORS

General				Architecture										Hardware Support	
							(For Microcomputers Only)								
Data Word Size (bits)	Process Type	Supply Voltage (V)	No. of Pins	Instruction Word Size (bits)	Directly Addressable Memory (words)	No. of Basic Instructions	On-Chip RAM (bits)	On-Chip (P)ROM (bits)	DMA Capa-bility	Maximum Clock Frequency (MHz)	Instruction Time Min/Max (μs)	Interrupts	No. of Levels	Proto-typing System	In-Circuit Emulator
4	NMOS	5	40	8	4K	124	152x4	1536x8		4	2/4	yes	4	x	x
4	NMOS	5	40	8	4K	124	152x4	2048x8		4	2/4	yes	4	x	x
4	NMOS	5	40	8	4K	124	256x4	4096x8		4	2/4	yes	4	x	x
4	NMOS	5	64	8	4K	124	152x4	2048x8		4	2/4	yes	4	x	x
4	NMOS	5	64	8	4K	124	256x4	4096x8		4	2/4	yes	4	x	x
4	PMOS	-15	28	8		50	48x4	640x8		0.1	10/40	yes	1	x	x
4	PMOS	-15	40	8		50	48x4	1Kx8		0.1	10/30	yes	2	x	x
4	PMOS	-15	42	8		60	128x4	2Kx8		0.1	10/30	yes	2	x	x
4	PMOS	-8.5	40	8		50	128x4	2Kx8		0.1	10/40	yes	2	x	x
4	CMOS	3-5		8	2K		128x4	2Kx4		0.4	10	yes	4	x	x
4	CMOS	3-5		8	2K		128x4	2Kx4		0.03	30	yes	4	x	x
4	CMOS	3-6		8	1K		64x4			1	6/120				
4	PMOS	-15V		8	1K		64x4			0.4	15/60				
4	CMOS	3-6		8	1K		256x4			1	6/120				
4	CMOS	3-6		8	2K		128x4			1	6/120				
4	PMOS	-15V		8	4K		128x4			0.55	11/60				
4	PMOS	-15V		8	2K		128x4			0.55	11/60				
4	PMOS	9		8	2K		128x4								
4	PMOS	-15V		8	2K		128x4			.4	15/60				
4	PMOS	-15V		8	4K		256x4			0.55	11/60				
4	PMOS	9,15	28	8	1K	43	64x4	1Kx8		0.4	15/60	no		x	x
4	CMOS	3-6	28	8	1K	43	64x4	1Kx8		1	6/120	no		x	x
4	CMOS	3-6	28	8	1K	40	256x4	1Kx8		1	6/120	no		x	x
4	PMOS	9,15	28	8	1K	43	64x4	1Kx8		0.4	15/60			x	
4	CMOS	3-6	28	8	1K	43	64x4	1Kx8		1	6/120	no		x	
4	PMOS	9,15	28	8	2K	40	128x4	2Kx8		0.4	15/60	no		x	x
4	CMOS	3-6	28	8	2K	40	128x4	2Kx8		1.0	6/120	no		x	x
4	PMOS	9,15	28	8	2K	40	128x4	2Kx8		0.4	15/60	no		x	x
4	PMOS	9,15	40	8	1K	43	64x4	1Kx8		0.4	15/60	no		x	x
4	CMOS	3-6	40	8	1K	43	64x4	1Kx8		1	6/120	no		x	x

Bold face indicates additional data is provided on the page noted.

© IC MASTER 1984

MICROPROCESSORS

Software Support									
		Programs							
Cross Assembler	High Level Language	Debug	Diagnostic	Edit	Alternate Sources	Comments	Device	Source	Line
x		x	x	x		All the MN15XX series members have bidirectional I/O lines, 8 bit counter/timer, 8 bit serial shift register, and power down feature to save contents of RAM.	MN1541	Panasonic (1589)	
x		x	x	x		All the MN15XX series members have bidirectional I/O lines, 8 bit counter/timer, 8 bit serial shift register, and power down feature to save contents of RAM.	MN1542	Panasonic (1589)	
x		x	x	x		All the MN15XX series members have bidirectional I/O lines, 8 bit counter/timer, 8 bit serial shift register, and power down feature to save contents of RAM.	MN1544	Panasonic (1589)	
x		x	x	x		All the MN15XX series members have bidirectional I/O lines, 8 bit counter/timer, 8 bit serial shift register, and power down feature to save contents of RAM.	MN1562	Panasonic (1589)	
x		x	x	x		All the MN15XX series members have bidirectional I/O lines, 8 bit counter/timer, 8 bit serial shift register, and power down feature to save contents of RAM.	MN1564	Panasonic (1589)	5
x		x	x	x		22 I/O lines, 16x8 PLA	MM75	Rockwell	
x		x	x	x		31 I/O lines, 16x8 PLA	MM76EL	Rockwell	
x		x	x	x		31 I/O lines.	MM78	Rockwell	
x		x	x	x		31 I/O lines.	MM78L	Rockwell	
x		x	x	x		¼ duty 32-segment LCD driver. Instruction set is same as TMS1000.	SMC1102	S MOS	10
x		x	x	x		¼ duty 32-segment LCD driver. Instruction set is same as TMS1000.	SMC1112	S MOS	
						ROMless system evaluator supports TMS1000/1200 CMOS family members.	SE1000C	TI	
						ROMless system evaluator supports TMS1000/1070/1200/1270/1700 PMOS family members.	SE1000P	TI	
						ROMless system evaluator supports TMS1004 CMOS family members.	SE1004C	TI	
						ROMless system evaluator supports TMS1100/1300 CMOS family members.	SE1100C	TI	15
						ROMless system evaluator supports TMS1400/1470/1600/1670 PMOS family members.	SE1400P	TI	
						ROMless system evaluator supports TMS2100/2170/2300/2370 PMOS family members.	SE2100P	TI	
						ROMless system evaluator supports TMS2132 PMOS family members.	SE2130P	TI	
						ROMless system evaluator supports TMS1100/1170/1300/1370 PMOS family members.	SE2200P	TI	
						ROMless system evaluator supports TMS2400/2470/2600/2670 PMOS family members.	SE2400P	TI	20
x		x	x	x		64 pin version, TMS-1099/SE-1, permits use of external PROM, RAM or ROM for program development. -9 volt VDD version available.	TMS1000	TI (1708)	
x		x	x	x		3 level subroutine nesting 32 term output PLA. TMS1099/C/SE-3 for program development.	TMS1000C	TI (1708,1709)	
x		x	x	x		Expanded RAM version of TMS1000C.	TMS1004C	TI	
x		x	x	x		3.5 V output drive capability. -9 volt VDD version available.	TMS1070	TI (1708)	
x		x	x	x		Vacuum fluorescent drive (-35V) capability on output, 22 I/O lines.	TMS1070C	TI (1708)	25
x		x	x	x		A 64-pin version, TMS1098/SE-2 permits use of external PROM/RAM/ROM for program development. -9 volt VDD version available.	TMS1100	TI (1708)	
x		x	x	x		CMOS version of TMS1100. 22 I/O lines.	TMS1100C	TI (1708)	
x		x	x	x		Fluorescent drive capability otherwise same as TMS1100. -9V VDD version available.	TMS1170	TI (1708)	
x		x	x	x		64 pin version, TMS-1099/SE-1, permits use of external PROM, RAM or ROM for program development. -9 volt VDD version available.	TMS1200	TI (1708)	
x		x	x	x		3 level subroutine nesting 32 term output PLA. TMS1099/C/SE-3 for program development.	TMS1200C	TI (1708,1709)	30

MICROPROCESSORS

General				Architecture										Hardware Support	
							(For Microcomputers Only)								
Data Word Size (bits)	Process Type	Supply Voltage (V)	No. of Pins	Instruction Word Size (bits)	Directly Addressable Memory (words)	No. of Basic Instructions	On-Chip RAM (bits)	On-Chip (P)ROM (bits)	DMA Capa-bility	Maximum Clock Frequency (MHz)	Instruction Time Min/Max (μs)	Interrupts	No. of Levels	Proto-typing System	In-Circuit Emulator
4	PMOS	9,15	40	8	1K	43	64x4	1Kx8		0.4	15/60	no		x	
4	CMOS	3-6	40	8	1K	43	64x4	1Kx8		1	6/120	no		x	
4	PMOS	9,15	40	8	2K	40	128x4	2Kx8		0.4	15/60	no		x	x
4	CMOS		40	8	2K	40	128	2Kx8		1.0	6/120	no		x	x
4	PMOS	9,15	40	8	2K	40	128x4	2Kx8		0.4	15/60	no		x	x
4	PMOS	9	28	8	4K	41	128x4	4Kx8		0.55	11/60	no		x	x
4	PMOS	9	28	8	4K	41	128x4	4Kx8		0.55	11/60	no		x	x
4	PMOS	9	40	8	4K	41	64x4	4Kx8		0.55	11/60	no		x	x
4	PMOS	9	40	8	4K	41	64x4	4Kx8		0.55	11/60	no		x	x
4	PMOS	9	28	8	4K	43	64x4	4Kx8		0.4	15/60	no		x	x
4	PMOS	9	28	8	2K	55	128x4	2Kx8		0.55	11/60	yes	1	x	x
4	PMOS	9	28	8	2K	55	128x4	2Kx8						x	x
4	PMOS	9	28	8	2K	55	128x4	2Kx8		0.55	11/60	yes	1	x	x
4	LMOS	3	28	8	2K	55	128x4	2Kx8			11/60			x	x
4	LMOS	3	40	8	2K	55	128x4	2Kx8			11/60			x	x
4	PMOS	9	28	8	2K	55	128x4	2Kx8		0.55	11/60	yes	1	x	x
4	PMOS	9	40	8	2K	55	128x4	2Kx8		0.55	11/60	yes	1	x	x
4	PMOS	9		8	4K	55	256x4	4Kx8		0.55	11/60	yes	1	x	x
4	PMOS	9		8	4K	55	256x4	4Kx8		0.55	11/60	yes	1	x	x
4	PMOS	9		8	4K	55	256x4	4Kx8		0.55	11/60	yes	1	x	x
4	PMOS	9	40	8	4K	55	256x4	4Kx8		0.55	11/60	yes	1	x	x
4	PMOS	9	28	8	2K	53	128x4	2Kx8		0.5	12/60	yes	1	x	x
4	CMOS	4-6		8	4K		160x4			0.2		yes		x	
4	NMOS	5		8	2K		128x4			0.5		yes		x	
4	NMOS	5		8	4K		256x4			0.25		yes		x	
4	NMOS	4.5-6.3	28	8	2K	49	64x4	1Kx8		4	4/10	yes	3		
4	NMOS	4.5-6.3	24	8	2K	49	64x4	1Kx8		4	4/10	yes	3		
4	NMOS	4.5-6.3	28	8	2K	49	64x4	1Kx8		4	4/10	yes	3		
4	NMOS	4.5-6.3	24	8	2K	49	64x4	1Kx8		4	4/10	yes	3		
4	PMOS	13.2	40	8											
8	NMOS	5	40	8,16	4K	96	64x8	1Kx8		6	2.5/4.17	yes	1	x	
8	NMOS	5	40	8,16	4K	97	120x8			6	2.5/4.17	yes	1	x	
8	NMOS	5	40	8,16	4K	97	64x8	1Kx8		6	1.36/2.5	yes	1	x	
8	NMOS	5	40	8,16	4K	97	128x8	1Kx8		6	1.36/2.5	yes	1	x	

Bold face indicates additional data is provided on the page noted.

© IC MASTER 1984

MICROPROCESSORS

Software Support										
		Programs								
Cross Assembler	High Level Language	Debug	Diagnostic	Edit	Alternate Sources	Comments	Device	Source		Line
x		x	x	x		3.5 V output drive capability. -9 volt VDD version available.	TMS1270	TI	(1708)	
x		x	x	x		Expanded I/O version of TMS1070C.	TMS1270C	TI	(1708)	
x		x	x	x		A 64-pin version, TMS1098/SE-2 permits use of external PROM/RAM/ROM for program development. -9 volt VDD version available.	TMS1300	TI	(1708)	
x		x	x	x		CMOS version of TMS1300. 28 I/O lines.	TMS1300C	TI	(1708)	
x		x	x	x		27 I/O lines, fluorescent drive capability. -9V VDD version available.	TMS1370	TI	(1708)	5
x		x	x	x		Expanded memory version of TMS1000. -9V VDD version available.	TMS1400	TI	(1708)	
x		x	x	x		Vacuum fluorescent drive version of TMS1400. -9V VDD version available.	TMS1470	TI	(1708)	
x		x	x	x		32 I/O lines. -9V VDD version available.	TMS1600	TI	(1708)	
x		x	x	x		Vacuum fluorescent drive version of TMS1600. -9V VDD version available.	TMS1670	TI	(1708)	
x		x	x	x		21 I/O lines, increased ROM version of TMS1000. -9V VDD version available.	TMS1700	TI	(1708)	10
x		x	x	x		Interval timer, 8 bit A/D, Zerg crossing detector, handles up to -15V on outputs.	TMS2100	TI	(1709)	
x		x	x	x		Complex sound generator, LED segment outputs, handles up to -9V on outputs.	TMS2132	TI		
x		x	x	x		Same as TMS2100 except handles up to -35V on output and has one less I/O line.	TMS2170	TI	(1709)	
x		x	x	x		LCD output driver 4-6 display digits, 32-40 segments. Handles up to -3V on outputs.	TMS2220	TI	(1709)	
x		x	x	x		LCD output driver 7.5-10 display digits, 60-80 segments. Handles up to -3V on outputs.	TMS2240	TI	(1709)	15
x		x	x	x		Event counter, two A/D input channels. Handles up to -15V on outputs.	TMS2300	TI	(1709)	
x		x	x	x		Same as TMS2300 except handles up to -35V on outputs.	TMS2370	TI	(1709)	
x		x	x	x		Handles up to -15V on outputs.	TMS2400	TI	(1709)	
x		x	x	x		Handles up to -35V on outputs one less I/O line than TMS2400.	TMS2470	TI	(1709)	
x		x	x	x		Handles up to -15V on outputs.	TMS2600	TI	(1709)	20
x		x	x	x		Handles up to -35V on outputs.	TMS2670	TI	(1709)	
x		x	x	x		Complex sound generator, LED segment outputs, handles up to -9V on outputs.	TMS3132	TI		
x						Evaluator chip for TLCS-46A series microprocessors. Use with external 4K ROM, 34 I/O lines.	TCP4600AC	Toshiba		
x						Evaluator chip for TLCS-43 series microprocessors. Use with external 2K ROM, 35 I/O lines.	TMP4300C	Toshiba		
x						Evaluator chip for TLCS-47 series microprocessors. Use with external 4K ROM, 35 I/O lines.	TMP4700C	Toshiba		25
					National	Microcontroller, serial I/O, counter/timer, 8-bit bidirectional port.	WD4200	Western		
					National	Same as WD4200, but no 4-bit IN port.	WD4210	Western		
					National	Extended temperature (-40 - 85°C) WD4200.	WD4320	Western		
					National	Extended temperature (-40 - 85°C) WD4210.	WD4321	Western		
							WD55	Western		30
	x	x	x	x	Fujitsu, National, NEC, Signetics, Siemens	ROMless version of 8048.	AM8035	AMD		
x	x	x	x	x	Fujitsu, National, NEC, Signetics, Siemens	ROMless version of 8049.	AM8039	AMD		
	x	x	x	x	Fujitsu, National, NEC, Signetics, Siemens	Low standby power mode. On-chip battery charging.	AM8048	AMD		
x	x	x	x	x	Fujitsu, National, NEC, Signetics, Siemens	Low standby power mode. On-chip battery charging.	AM8049	AMD		

MICROPROCESSORS

General				Architecture										Hardware Support	
							(For Microcomputers Only)								
Data Word Size (bits)	Process Type	Supply Voltage (V)	No. of Pins	Instruction Word Size (bits)	Directly Addressable Memory (words)	No. of Basic Instructions	On-Chip RAM (bits)	On-Chip (P)ROM (bits)	DMA Capa-bility	Maximum Clock Frequency (MHz)	Instruction Time Min/Max (μs)	Interrupts	No. of Levels	Proto-typing System	In-Circuit Emulator
8	NMOS	5,12	40	8,16,24	65K	78				2	1.5/3.75	yes	1		
8	NMOS	5	40	8,16,24	65K	80				3	0.8/1.3	yes	4	x	x
8	NMOS	5,12	40	8,16,24	65K	78				4	1.5/3.75	yes			
8	NMOS	5		8,16,24	64K	72			x	2	1/6	yes	3	x	x
8	NMOS	5	40	8,16,24	64K	82	64x8	2Kx8		2	1/6	yes	8	x	x
8	NMOS	5	40	8,16,24	64K	72	128x8		x	2	1/6	yes	3	x	x
8	NMOS	5	40	8,16,24	64K	82	192x8			2	1.6/9.6	yes	8	x	x
8	NMOS	5	28	8-24	2K	59	64x8	1100x8		2	1/5.5	yes	3	x	
8	NMOS	5	40	8-32	64K	59			x	2	1/7.5	yes	3	x	x
8	NMOS	5	40	8,16,24	64K		128x8			1.5		yes		x	x
8	NMOS	5	40	8-32	64K				x	1.5		yes	3	x	x
8	NMOS	5	40	8-32	64K				x	2		yes	3	x	x
8	NMOS	5,12		16,32,48	16M					3		yes			
8	NMOS	5		8-200	16M					10		yes			
8	NMOS	5	40	8-24	2K	70	64x8	1K/2K/3K/-4Kx8		4		ext.		x	x
8	NMOS	5	40	8-24	4K		128x8	1K/2K/3K/-4Kx8		4		yes		x	x
8	NMOS	5	40	8-24	2K					4		yes		x	x
8	NMOS	5		8-24	4K		64x8	4Kx8		4		yes		x	x
8	CMOS	5	40	8-24	2K	70	64x8	1K/2K/3K/-4Kx8		4		ext.		x	x
8	NMOS	5	40	8-24	2K	70	64x8	2Kx8		4		ext.		x	x
8	NMOS	5	40	8-24	4K		128x8	2K/4Kx8		4		yes		x	x
8	NMOS	5	40	8-24	2K					4		yes		x	x
8	NMOS	5	40	8-24	65K	72			x	2		yes		x	x
8	NMOS	5	40	8-24	65K	82	128x8	2Kx8		1		yes		x	x
8	NMOS	5	40	8-24	65K	72	128x8			2		yes			
8	NMOS	5	40	8,16,24	65K	82	128x8			8		yes		x	x
8	NMOS	5	40	8-24	65K	72				4	2/5	yes			
8	HMOS	5	40	8-32	65K	59			x	1	2/5	yes	3		
8	HMOS	5	40	8-32	65K	59			x	1	1/10	yes	3		
8	HMOS	5	40	8-32	65K				x	1.5		yes	3		
8	HMOS	5	40	8-32	65K				x	1.5		yes	3		

Bold face indicates additional data is provided on the page noted.

© IC MASTER 1984

MICROPROCESSORS

Software Support									
		Programs							
Cross Assembler	High Level Language	Debug	Diagnostic	Edit	Alternate Sources	Comments	Device	Source	Line
					Intel, NEC, National, Raytheon, Signetics, Mitsubishi	Priority interrupts with Intel 8214.	AM8080A	AMD	
x	x	x	x	x	Intel, NEC, Mitsubishi	8085A-2 runs at 5 MHz.	**AM8085A**	**AMD**	**(1435)**
					Intel, NEC, National, Raytheon, Signetics, Mitsubishi	Priority interrupts with Intel 8214.	AM9080A	AMD	
					EFCIS, Fairchild, Hitachi	DMA through HALT and three state control.	S6800	AMI	
					EFCIS, Motorola, Hitachi	DMA thru HALT and three state control, software compatible with S6800.	**S6801**	**AMI**	**(1450)** 5
					EFCIS, Fairchild, Motorola, Hitachi	Consists of S6800 with 6821 and 6875 on chip.	S6802	AMI	
					EFCIS, Motorola, Hitachi	ROMless version of S6801.	S6803	AMI	
					EFCIS, Hitachi, Motorola, Signetics	20 programmable bidirectional I/O lines, self check ROM.	**S6805**	**AMI**	**(1451)**
					EFCIS, Fairchild, Motorola, Hitachi	On chip oscillator, enhanced 6800 command set, compatible with entire S6800 family.	**S6809**	**AMI**	**(1448)**
					Fairchild, Motorola, Hitachi, Fujitsu	Consists of S6800 with 6821 and 6875 on chip, CPU runs at 1.5 MHz.	S68A02	AMI	10
					Fairchild, Motorola, Hitachi	On chip oscillator, enhanced 6800 command set, compatible with entire S6800 family. CPU runs at 1.5 MHz.	**S68A09**	**AMI**	**(1448)**
					Fairchild, Motorola, Hitachi	On chip oscillator, enhanced 6800 command set, compatible with entire S6800 family. CPU runs at 2 MHz.	**S68B09**	**AMI**	**(1448)**
					SMC	8 bit data bus, 16 bit internal operations. Software compatible with TMS9900.	S9980A	AMI	
					National, Synertek, Eurotechnique	8 bit version of F16032 16 bit CPU. 32 bit internal architecture. Software upward compatible with F16016 and F16032.	**F16008**	**Fairchild**	**(1470)**
x	x	x	x	x	Mostek, Motorola	One chip microcomputer. Programmable hardware, timer on-chip. Software compatible with F8. Choice of ROM size.	**F3870**	**Fairchild**	**(1456)** 15
x	x	x	x	x	Mostek	Stand-by power down, 64 bytes of executable RAM available. Choice of ROM size.	F3872	Fairchild	
x	x	x	x	x	Mostek	Stand-by power down, 64 bytes of executable RAM available.	F3876	Fairchild	
x	x	x	x	x	Mostek	Software compatible with the F8. On chip timer. One chip microcomputer.	F3878	Fairchild	
x	x	x	x	x	Mostek, Motorola	One chip microcomputer. Programmable hardware, timer on-chip. Software compatible with F8. Choice of ROM size. CMOS version.	F38C70	Fairchild	
x		x	x	x		2K EPROM program storage.	**F38E70**	**Fairchild**	**(1456)** 20
x	x	x	x	x	Mostek	Stand-by power down, 64 bytes of executable RAM available. Choice of RAM size.	F38L72	Fairchild	
x	x	x	x	x	Mostek	Stand-by power down, 64 bytes of executable RAM available, low power.	F38L76	Fairchild	
x	x	x	x	x	AMI, Fujitsu, Hitachi, Motorola	DMA through HALT and three state control, slower clock speeds available.	**F6800**	**Fairchild**	**(1454,1458,1461)**
x	x	x	x	x	AMI, Fujitsu, Hitachi, Motorola	DMA through HALT and three state control, software compatible with F6800.	F6801	Fairchild	
						DMA through HALT and three state control on chip clock, software compatible with F6800.	**F6802**	**Fairchild**	**(1461)** 25
x	x	x	x	x	AMI, Hitachi, Motorola	Same as F6801 with out ROM.	F6803	Fairchild	
						DMA through HALT, software compatible with F6800, programmable timer.	**F6808**	**Fairchild**	**(1461)**
					AMI, Fujitsu, Motorola, Hitachi	Compatible with entire F6800 family, on chip oscillator.	**F6809**	**Fairchild**	**(1459)**
						Compatible with entire F6800 family, requires external clock.	**F6809E**	**Fairchild**	**(1459)**
					AMI, Fujitsu, Motorola, Hitachi	Compatible with entire F6800 family, on chip oscillator. Runs at 1.5 MHz.	**F68A09**	**Fairchild**	**(1459)** 30
						Compatible with entire F6800 family, requires external clock. Runs at 1.5 MHz.	**F68A09E**	**Fairchild**	**(1459)**

MICROPROCESSORS

General				Architecture										Hardware Support	
							(For Microcomputers Only)								
Data Word Size (bits)	Process Type	Supply Voltage (V)	No. of Pins	Instruction Word Size (bits)	Directly Addressable Memory (words)	No. of Basic Instructions	On-Chip RAM (bits)	On-Chip (P)ROM (bits)	DMA Capa-bility	Maximum Clock Frequency (MHz)	Instruction Time Min/Max (μs)	Interrupts	No. of Levels	Proto-typing System	In-Circuit Emulator
8	HMOS	5	40	8-32	65K				x	2		yes	3		
8	HMOS	5	40	8-32	65K				x	2		yes	3		
8	NMOS	5	40	12	512x12	30	32x8	512x12		1	4/8	no		x	x
8	NMOS	5	18	12		29	32x8	256x12		4	2/10			x	x
8	NMOS	5	18	12	512x12	30	32x8	512x12		4	2/4	no		x	x
8	NMOS	5	28	12	512x12	30	32x8	512x12		1	4/8	no		x	x
8	NMOS	5	28	12	512x12	30	32x8	512x12		4	4/8	yes	1	x	x
8	NMOS	5	28	12		29	32x8	512x12		4	2/10	yes		x	x
8	NMOS	5	40	13	1024x13	57	64x8	1024x13		8	1/2	yes	1	x	x
8	NMOS	5	40	13	2048x13	57	64x8	2048x13		8	1/2	yes	1	x	x
8	CMOS	5	28	12		31	32x8	512x12		3	3.3/6.6			x	x
8	NMOS	5	40	8	64K	61	128x8			5	2.4/19.2	yes	3	x	x
8	NMOS	5	40	8	64K	61	128x8	2Kx8		5	2.4/19.2	yes	3	x	x
8	NMOS	5	40	8	64K	61	128x8	4Kx8		5	2.4/19.2	yes	3	x	x
8	NMOS	5	40	8	64K	61	128x8	4Kx8		5	2.4/19.2	yes	3	x	x
8	CMOS	5	40	8	64K	61	128x8			3	4/32	yes	3	x	x
8	CMOS	5	40	8	64K	61	128x8	2Kx8		3	4/32	yes	3	x	x
8	CMOS	5	40	8	65K	64				4	0.5/3.5	yes	1		
8	CMOS	5	28	8	4K	64				4	0.5/3.5	yes	1		
8	CMOS	5	28	8	8K	64				4		yes	1		
8	CMOS	5	28	8	4K	64				4		yes	1		
8	CMOS	5	28	8	4K	64				4		yes	1		
8	CMOS	5	28	8	8K	64				4		yes	1		
8	CMOS	5	40	8	65K	64			x	4		yes	1		
8	CMOS	5		8	4K					4		yes	1		
8	CMOS	5	28	8	8K	64			x	4		yes	1		
8	CMOS	5	28	8	4K	64			x	4		yes	1		
8	CMOS	5	28	8	4K	64			x	4		yes	1		
8	CMOS	5	28	8	8K	64			x	4		yes	1		
8	CMOS	5	40	8	65K	64				4		yes	1		
8	CMOS	5	28	8	4K	64				4		yes	1		
8	CMOS	5	40	8	65K	64				4		yes	4		
8	CMOS	5	28	8	4K	64				4		yes	4		
8	CMOS	5	28	8	8K	64				4		yes	1		

Bold face indicates additional data is provided on the page noted.

© IC MASTER 1984

MICROPROCESSORS

Software Support									
		Programs							
Cross Assembler	High Level Language	Debug	Diagnostic	Edit	Alternate Sources	Comments	Device	Source	Line
					AMI, Fujitsu, Motorola, Hitachi	Compatible with entire F6800 family, on chip oscillator. Runs at 2.0 MHz.	**F68B09**	**Fairchild (1459)**	
						Compatible with entire F6800 family, requires external clock. Runs at 2 MHz.	**F68B09E**	**Fairchild (1459)**	
x		x	x		Plessey	32 8-bit registers. Arithmetic logic unit and 32 user defined TTL compatible input-output lines. Self contained oscillator. Stand alone controller.	PIC1650A	GI	
x		x	x			Pin-for-pin compatible with PIC1654. Commercial, industrial and MIL temp. ranges.	PIC1652	GI	
x		x	x		Plessey	All the features of the PIC1650A but with 12 I/O lines, crystal oscillator. Available in three temperature ranges including -40°C to 110°C.	PIC1654	GI	5
x		x	x		Plessey	All the features of the PIC1650A but with 20 I/O lines.	PIC1655A	GI	
x		x	x		Plessey	All the features of the PIC1655A but with internal and external interrupts. 3 level stack, crystal oscillator.	PIC1656	GI	
x		x	x			Same as 1650A but with 20 bidirectional I/O lines and mask programmable prescaler for RTCC.	PIC1657	GI	
x		x	x		Plessey	Expanded PIC1650 instruction set. 1024x13 bit program ROM. 64 8-bit registers, 6 level stack, 2 external interrupts. 32 I/O lines.	PIC1670	GI	
x		x	x		Plessey	Expanded PIC1650 instruction set. 2Kx13 bit program ROM. 64 8-bit registers, 6 level stack, 2 external interrupts. 32 I/O lines.	PIC1672	GI	10
x		x	x			Mask programmable prescaler for RTCC. Low power standby mode.	PIC16C58	GI	
x		x	x				PIC7000	GI	
x		x	x			External memory expansion capability.	PIC7020	GI	
x		x	x			External memory expansion capability.	PIC7040	GI	
x		x	x			External memory expansion capability.	PIC7041	GI	15
x		x	x				PIC70C00	GI	
x		x	x			External memory expansion capability.	PIC70C20	GI	
					Synertek	Pin compatible with NMOS 6500 processors, bus compatible with MC6800. On-board clock oscillator.	G65SC02	GTEMicro	
					Synertek	Pin compatible with NMOS 6500 processors, bus compatible with MC6800.	G65SC03	GTEMicro	
					Synertek	Pin compatible with NMOS 6500 processors, bus compatible with MC6800.	G65SC04	GTEMicro	20
					Synertek	Pin compatible with NMOS 6500 processors, bus compatible with MC6800.	G65SC05	GTEMicro	
					Synertek	Pin compatible with NMOS 6500 processors, bus compatible with MC6800.	G65SC06	GTEMicro	
					Synertek	Pin compatible with NMOS 6500 processors, bus compatible with MC6800.	G65SC07	GTEMicro	
						Bus compatible with MC6800. On board clock oscillator.	G65SC102	GTEMicro	
						Bus compatible with MC6800.	G65SC103	GTEMicro	25
						Bus compatible with MC6800.	G65SC104	GTEMicro	
						Bus compatible with MC6800.	G65SC105	GTEMicro	
						Bus compatible with MC6800.	G65SC106	GTEMicro	
						Bus compatible with MC6800.	G65SC107	GTEMicro	
						Bus compatible with MC6800. On board clock oscillator.	G65SC112	GTEMicro	30
						Bus compatible with MC6800.	G65SC115	GTEMicro	
					Synertek	Pin compatible with NMOS 6500 processors, bus compatible with MC6800.	G65SC12	GTEMicro	
					Synertek	Pin compatible with NMOS 6500 processors, bus compatible with MC6800.	G65SC13	GTEMicro	
					Synertek	Pin compatible with NMOS 6500 processors, bus compatible with MC6800.	G65SC14	GTEMicro	

MICROPROCESSORS

General				Architecture										Hardware Support	
							(For Microcomputers Only)								
Data Word Size (bits)	Process Type	Supply Voltage (V)	No. of Pins	Instruction Word Size (bits)	Directly Addressable Memory (words)	No. of Basic Instructions	On-Chip RAM (bits)	On-Chip (P)ROM (bits)	DMA Capa-bility	Maximum Clock Frequency (MHz)	Instruction Time Min/Max (μs)	Interrupts	No. of Levels	Proto-typing System	In-Circuit Emulator
8	CMOS	5	28	8	4K	64				4		yes	1		
8	CMOS	5	60	8	64K		64x8	2Kx8		2		yes	1	x	x
8	CMOS	5	40	8-24	65K	82	128x8	4Kx8	x	3.58		yes		x	x
8	CMOS	5	40	8-24	65K	82	128x8	2Kx8	x	1		yes		x	x
8	CMOS		40												
8	CMOS	5	60	8-24	4K	61	64x8	4Kx8	x	4		yes			
8	NMOS	5	40	8-24	65K	72			x	2	1/2.5	yes			
8	NMOS	5	40	8-24	64K		128x8	2Kx8	x	1		yes			
8	NMOS	5	40	8-24	64K		128x8		x	2		yes			
8	NMOS	5	40	8-24	64K		128x8		x	1.25		yes			
8	NMOS	5	28	8-24	2K	59	64x8	1.1Kx8		2	1/5.5	yes	3		
8	NMOS	5	40	8-32	64K	59			x	2	1/7.5	yes	6		
8	NMOS	5	40	8-24	64K	59			x	2	1/1	yes	3		
8	NMOS	5	40	8-24					x						
8	NMOS	5	40	8-24	2K		112x8	2Kx8	x	4		yes			
8	HMOS	5	28	8,16	1K	70	64x8	1Kx8		3.58	8.38/16.8	no		x	x
8	HMOS	5	40	8,16,24	64K	111	128x8			12	1/4	yes	2	x	x
8	HMOS	5	40	8,16,24	65K	111	256x8			12	1/4	yes	2	x	x
8	HMOS	5	40	8,16	4K	96	64x8			11	1	yes	1	x	x
8	HMOS	5	40	8,16	4K	96	128x8			11	1.4/2.8	yes	2	x	x
8	HMOS	5	40	8	4K		256x8			11	1.4/2.8	yes	1	x	x
8	HMOS	5	40	8,16	4K	96	64x8	1Kx8		8	1.4/2.8	yes	1	x	x
8	HMOS	5	40	8,16	4K	96	128x8	2Kx8		11	1.4/2.8	yes	1	x	x
8	HMOS	5	40	8	4K	96	256x8	4Kx8		11	1.4/2.8	yes	1	x	x
8	HMOS	5	40	8,16,24	64K	111	128x8	4Kx8		12	4	yes	2	x	x
8	HMOS	5	40	8,16,24	65K	111	256x8	8Kx8		12	1.4/2.8	yes	2	x	x
8	NMOS	5,12	40	8,16,24	65K	78				2	1.5/3.75	yes	1	x	x
8	HMOS	5	40	8,16,24	65K	102				3,5,6	0.67/1.3	yes	4	x	x
8	CHMOS	5	40	8,16,24	65K	111	128x8			12	1/4	yes	5	x	x
8	CHMOS	5	40	8	4K	97	128x8			11	1.4/2.8	yes	2	x	x
8	CHMOS	5	40	8	4K	97	128x8	2K		11	1.4/2.8	yes	2	x	x
8	CHMOS	5	40	8,16,24	65K	111	128x8	4Kx8		12	1/4	yes	5	x	x
8	HMOS	5	40	8,16	4K	111	64x8	1Kx8		11	1.3	yes	1	x	x
8	HMOS	5	40	8,16,24	65K	111	128x8	4Kx8		12	4	yes	2	x	x
8	HMOS	5	40	8,16	4K	96	64x8			8	1.9	yes	2	x	x
8	HMOS	5	40	8,16	4K	96	128x8			8	1.9	yes	2	x	x

Bold face indicates additional data is provided on the page noted.

© IC MASTER 1984

MICROPROCESSORS

Software Support									
		Programs							
Cross Assembler	High Level Language	Debug	Diagnostic	Edit	Alternate Sources	Comments	Device	Source	Line
					Synertek	Pin compatible with NMOS 6500 processors, bus compatible with MC6800.	G65SC15	GTEMicro	
x	x	x	x	x		Uses 65SC00 CPU, on board sine wave generator, 16 bit timer, bus compatible with 6800.	G65SC150	GTEMicro	
x		x	x	x		CMOS version of HD6801. Various options available on HD6301X family member chips.	HD6301	Hitachi	
x		x	x	x		CMOS version of HD6803. Various options available on HD6303X family member chips.	HD6303	Hitachi	
						CMOS. Various options available on HD6333X family member chips.	HD6333	Hitachi	5
						CMOS version of HD6805. Various options available on HD63L05X family member chips.	HD63L05	Hitachi	
						Various options available on HD6800X family member chips.	HD6800	Hitachi	
						Various options available on HD6801X family member chips.	HD6801	Hitachi	
						Various options available on HD6802X family member chips.	HD6802	Hitachi	
						Various options available on HD6803X family member chips.	HD6803	Hitachi	10
					AMI, EFCIS, Signetics	Various options available on HD6805X family member chips.	HD6805	Hitachi	
					AMI, EFCIS, Fairchild	Various options available on HD6809X family member chips.	HD6809	Hitachi	
						Same as HD6809, but with external clock, various options available on HD6809EX family member chips.	HD6809E	Hitachi	
						HD6801 with piggyback socket for EPROM (HN2716), various options available on HD68P01X member chips.	HD68P01	Hitachi	
						HD6805 with piggyback socket for EPROM (HN462532), various options available on HD68P05X family member chips.	HD68P05	Hitachi	15
x		x	x	x	Signetics, NEC	Software subset of 8048, 21 I/O lines.	8021H	Intel	
x	x	x	x	x	AMD	Two 16 bit counters, serial I/O port Boolean processor.	8031AH	Intel	
x	x	x	x	x		Three 16-bit timer/counters. Serial I/O port.	8032	Intel	
x		x	x	x		Can be used with external ROM and RAM. 27 I/O lines, 8-bit timer/counter.	8035AHL	Intel	
x		x	x	x	AMD	Can be used with external ROM and RAM.	8039AHL	Intel	20
		x	x	x		27 I/O lines. Can be used with external RAM and ROM.	8040AHL	Intel	
x		x	x	x	AMD	1K ROM. 27 I/O lines. 8048H-1 has 11 MHz clock. Can be used with external RAM and ROM.	8048AH	Intel	
x		x	x	x	AMD, NEC, Fujitsu, Signetics, Mitsubishi	Can be used with external ROM and RAM.	8049AH	Intel	
		x	x	x		27 I/O lines. Can be used with external RAM and ROM.	8050AH	Intel	
x	x	x	x	x	AMD	Two 16 bit counters, serial I/O port Boolean processor.	8051AH	Intel	25
x	x	x	x	x		Three 16-bit timer/counters. Serial I/O port.	8052	Intel	
x	x	x	x	x	AMD, NEC, TI, National, Mitsubishi	8080A-1 runs at 3.125 MHz max, -2 runs at 2.63 MHz max.	8080A	Intel	
x	x	x	x	x	AMD	8085AH-1 runs 6 MHz, AH-2 runs 5 MHz. M8085AH Mil version.	8085AH	Intel	
x	x	x	x	x	Intersil	Two 16 bit timer/counters, serial I/O port. Boolean processor. Can be used with external ROM or RAM.	80C31	Intel	
x		x	x	x	NEC, National, Toshiba	Low power operation. 27 I/O lines. Can be used with external RAM and ROM.	80C39	Intel	30
		x	x	x		Low power operation. 27 I/O lines. Can be used with external RAM and ROM.	80C49	Intel	
x	x	x	x	x	Intersil	Two 16 bit timer/counters, serial I/O port. Boolean processor. Can be used with external ROM or RAM.	80C51	Intel	
x		x	x	x	AMD	1K EPROM. Can be used with external ROM and RAM.	8748H	Intel	
x	x	x	x	x		Two 16 bit counters, serial I/O port Boolean processor, 4K EPROM.	8751H	Intel	
						CPU with power down mode. Can be used with external RAM or ROM.	M8035HL	Intel	35
						CPU with power down mode. Can be used with external RAM or ROM.	M8039HL	Intel	

MICROPROCESSORS

General				Architecture										Hardware Support	
							(For Microcomputers Only)								
Data Word Size (bits)	Process Type	Supply Voltage (V)	No. of Pins	Instruction Word Size (bits)	Directly Addressable Memory (words)	No. of Basic Instructions	On-Chip RAM (bits)	On-Chip (P)ROM (bits)	DMA Capa-bility	Maximum Clock Frequency (MHz)	Instruction Time Min/Max (μs)	Interrupts	No. of Levels	Proto-typing System	In-Circuit Emulator
8	CHMOS	5	40	8,16,24	64K	111	128x8			12	1/4	yes	2	x	x
8	CHMOS	5	40	8,16	4K	97	128x8			11	1.4/2.8	yes		x	x
8	CHMOS	5	40	8,16	4K	96	128x8	2x8		11	1.4/2.8	yes	1	x	x
8	CHMOS	5	40	8,16,24	64K	111	128x8	4Kx8		12	1/4	yes	2	x	x
8	HMOS	5	40	8,16,24	4K		128x8	2Kx8		11		yes	2	x	x
8	HMOS	5	40	8-48	1Mb	150			x	8		yes	1	x	x
8	HMOS	5	40	8,16	64Kb	97			x	10	0.2/19	yes	8	x	
8	NMOS	5	40	8,16	4K	96	64x8			6		yes			
8	NMOS	5	40	8-16	4K	96	128x8			11		yes	2	x	
8	NMOS	5	40	8,16	4K	96	128x8			6			1		
8	NMOS	5	40	8,16	4K	96	128x8			8			1		
8	NMOS	5	40	8,16	4K	96	64x8	1Kx8		6		yes	1		
8	NMOS	5	40	8-16	4K	96	128x8	2Kx8		11		yes	1	x	
8	NMOS	5	40	8,16	4K	96	128x8	2Kx8		6			1		
8	NMOS	5	40	8,16	4K	96	128x8	2Kx8		8			1		
8	NMOS	5	40	8-24	64K	80				3	1.4/2.8	yes	4	x	x
8	CMOS	5	40	8,16	4K	96	128x8	2Kx8		6	1.4/2.8	yes	1		
8	NMOS	5	40	8,16	4K	96	64x8	1Kx8		6	1.4/2.8	yes	1		
8	NMOS	5	40	8	4K	96	256x8	4Kx8		11	1.4/2.8	yes			
8	NMOS	5,12		8,16,24	64K		64x8	1Kx8		2		yes	1	x	x
8	NMOS	5	40	8,16,24	4K	70	128x8	4Kx8		4	1/6.5	yes	1	x	x
8	NMOS	5	40	8,16,24	2112	70	128x8	2Kx8		4	1/6.5	yes	1	x	x
8	NMOS	5	40	8,16,24	4K	70	128x8	4Kx8		4	1/6.5	yes	1	x	x
8	NMOS	5	40	8-36	65K	70				4	1/6.5	yes	1	x	x
8	CMOS	3-6	28	8,16,24	2K	51	64x8	1080x8		1	2/10	yes	4	x	x
8	CMOS	3-6	40	8,16,24	8K	51	112			1	2/10	yes	4	x	x
8	CMOS	3-6	28	8,16,24	2K	51	64x8	1089x8		1	2/10	yes	4	x	x
8	CMOS	3-6	40	8,16,24	8K	51	112x8	2.1Kx8		1	2/10	yes	4	x	x
8	CMOS	3-6	40	8,16,24	8K	51	112x8	2106x8		1	2/10	yes	4	x	x
8	CMOS	3-6	40	8,16,24	8K	51	112x8	2.1Kx8		1	2/10	yes	4	x	x
8	NMOS	5	40	8,16,24	4K		128x8	4Kx8		4		yes	1	x	x
8	HMOS	5	40	8,16,24	64K	59	96x8	3600x8		1	2/11	yes	3	x	x
8	NMOS	5	40	8,16,24	64K	72			x	2	1/6	yes	3	x	x

Bold face indicates additional data is provided on the page noted.

© IC MASTER 1984

MICROPROCESSORS

Software Support									
		Programs							
Cross Assembler	High Level Language	Debug	Diagnostic	Edit	Alternate Sources	Comments	Device	Source	Line
x		x	x	x		Two 16-bit timer/counters, serial port, Boolean processor, MIL temp.	M80C31	Intel	
x		x	x	x		27 I/O lines, 8-bit counter/timer. Can use external RAM or ROM, MIL temp.	M80C39	Intel	
x		x	x	x		27 I/O lines, programmable ROM, 8-bit counter/timer. Can use external RAM or ROM, MIL temp.	M80C49	Intel	
x		x	x	x		M80C31 with mask programmable ROM, MIL temp.	M80C51	Intel	
						27 I/O lines, programmable ROM, 8-bit counter/timer. Can be used with external RAM or ROM.	M8749H	Intel	5
	x	x	x	x		High integration 8-bit microprocessor, 2 independent DMA channels, 3 programmable 16-bit timers, programmable memory and peripheral chip-select logic, clock generator, object code compatible with all existing iAPX86/88 software, 10 new instruction types.	iAPX188	Intel	
x	x	x	x	x		Two chip-processor 8086 CPU plus 80150 CP/M operating system, Standard on-chip BIOS. Compatible with 8086/87/88/186 up to 8 MHz without wait states.	iAPX88/50	Intel	
					Intel	27 I/O lines, can be used with external RAM and ROM.	M5L8035	Mitsubishi	
x	x	x	x	x	Intel, NEC, Signetics	Low standby power mode, slower clock speeds available. On-chip battery charging.	M5L8039-11	Mitsubishi	
					Intel, AMD, NEC, National		M5L8039-6	Mitsubishi	10
					Intel, AMD, NEC, National		M5L8039-8	Mitsubishi	
					Intel	27 I/O lines, can be used with external RAM and ROM.	M5L8048	Mitsubishi	
x	x	x	x	x	Intel, NEC, Signetics	Low standby power mode, slower clock speeds available. On-chip battery charging.	M5L8049	Mitsubishi	
					Intel, AMD, NEC, National		M5L8049-6	Mitsubishi	
					Intel, AMD, NEC, National		M5L8049-8	Mitsubishi	15
x	x	x	x	x	AMD, NEC, Intel	8080A compatible with multiplexed bus operation.	M5L8085A	Mitsubishi	
					Intel	CMOS M5L8049.	M5L80C49	Mitsubishi	
					Intel	1K EPROM, can be used with external ROM & RAM.	M5L8748	Mitsubishi	
					Intel	27 lines I/O, can be used with external RAM and ROM.	M5M8050H	Mitsubishi	
x		x	x	x	Fairchild, SGS	Programmable timer.	MK3850	Mostek	20
x		x	x	x	Fairchild, Motorola	One chip microcomputer. Programmable hardware, timer on-chip: 3K, 2K, 1K PROM versions available.	MK3870	Mostek	
x		x	x	x	Fairchild, Motorola	Programmable hardware timer, baud rate generator.	MK3873	Mostek	
x		x	x	x	Fairchild, Motorola	Programmable hardware timer, baud rate generator.	MK3875	Mostek	
x	x		x		NEC, Zilog	8080A software compatible, 25 MHz optional frequency.	MK3880	Mostek	
x		x	x	x		Same as 1468705F2 except F5 has software security.	MC1458705F5	Motorola	25
x		x	x	x	RCA	Single chip CPU and I/O, up to 8K external address space, 16 programmable bidirectional I/O lines, multiplexed bus.	MC146805E2	Motorola (1503,1505)	
x		x	x	x	RCA	20 I/O (16 programmable bidirectional) self check mode, EPROM version available.	MC146805F2	Motorola (1503,1505)	
x		x	x	x	RCA	32 programmable bidirectional I/O lines. Self check mode, EPROM version available.	MC146805G2	Motorola (1503,1505)	
x		x	x	x		Self check, frequency synthesis, audio tone output, dead man timer.	MC146805H2	Motorola (1503,1505)	
x		x	x	x		32 programmable bidirectional I/O lines, bootstrap, EPROM version of 146805F2.	MC146870562	Motorola (1503)	30
x			x		Fairchild, Mostek, SGS	Recommended replacement MC6805XX.	MC3870	Motorola	
x		x	x	x		128 bytes EEPROM, SPI, self check.	MC5805K3	Motorola	
x	x		x		AMI, EFCIS, Fairchild, Hitachi	DMA through HALT and three state control, addressing modes.	MC6800	Motorola (1505,2045)	

MICROPROCESSORS

General				Architecture										Hardware Support	
							(For Microcomputers Only)								
Data Word Size (bits)	Process Type	Supply Voltage (V)	No. of Pins	Instruction Word Size (bits)	Directly Addressable Memory (words)	No. of Basic Instructions	On-Chip RAM (bits)	On-Chip (P)ROM (bits)	DMA Capa-bility	Maximum Clock Frequency (MHz)	Instruction Time Min/Max (μs)	Interrupts	No. of Levels	Proto-typing System	In-Circuit Emulator
8	HMOS	5			1M	56									
8	HMOS	5	40	8,16,24	64K	82	128x8	2Kx8		1	2/12	yes	2	x	x
8	HMOS	5	40	8,16,24	64K	82	128x8	2Kx8		1.25	2/12	yes	1	x	x
8	HMOS	5	40	8,16,24	64K	89	192x8	4Kx8		1.25	1.6/9.6	yes	8	x	x
8	HMOS	5	40	8,16,24	64K	82	192x8	4Kx8		1.25	1	yes	1	x	x
8	NMOS	5	40	8,16,24	64K	72	128x8			2	1/6	yes	3	x	x
8	HMOS	5	40	8,16,24	64K	82	192x8			2	1.6/9.6	yes	8	x	x
8	HMOS	5	40	8,16,24	64K	89	128x8			2	1.6/9.6	yes	8	x	x
8	HMOS	5	40	8,16,24	64K	89	192x8			1.25	1.6/9.6	yes	8	x	x
8	HMOS	5	40	8,16,24	64K	82	128x8			1.25		yes	1	x	x
8	HMOS	5	20	8,16,24	4K	42	32x8	1Kx8		11	0.6/14	yes	3	x	x
8	HMOS	5	28	8,16,24	4K		32x8	1Kx8		11	0.6/14	yes	3	x	x
8	HMOS	5	28	8,16,24	2K	59	64x8	1.1Kx8		2	1/5.5	yes	3	x	x
8	HMOS	5	28	8,16,24	2K	59	112x8	1.1Kx8		2	2/11	yes	3	x	x
8	HMOS	5	28	8,16,24	2K	59	64x8	1.8Kx8		2	2/11	yes	3	x	x
8	HMOS	5	40	8,16,24	4K	59	64x8	2Kx8		2	2/11	yes	3	x	x
8	HMOS	5	40	8,16,24	4K	59	64x8	2Kx8		1	2/11	yes	3	x	x
8	HMOS	5	28	8,16,24	4K	59	64x8	1480x8		1	2/11	yes	3	x	x
8	HMOS	5	28	8,16,24	4K	59	64x8	2.5Kx8		1.05	2/11	yes	3		x
8	HMOS	5	40	8,16,24	4K	59	64x8	2Kx8		1	2/11	yes	3	x	x
8	HMOS	5	40	8,16,24	4K	59	112x8	3.8Kx8		1	2/11	yes	3	x	x
8	NMOS	5	40	8,16,24	64K	72			x	2	1/6	yes	3	x	x
8	HMOS	5	40	8-32	64K	59			x	2	1/7.5	yes	6	x	x
8	HMOS	5	40	8-32	64K	59			x	2	1/7.5	yes	6	x	x
8	HMOS	5	48	8,16,24	64K	82	128x8	2Kx8		1.25	1.6/9.6	yes	8		x
8	HMOS	5	48	8,16,24	64K	82	128x8			1.25	1.6/9.6	yes	8		x
8	NMOS	5	40	8,16,24	64K	82	128x8	2Kx8		1.25	0.8/2	yes	8	x	x
8	HMOS	5	40	8,16,24	64K	89	192x8	4Kx8		1.25	1.6/9.6	yes	8	x	x
8	HMOS	5	40	8,16,24	64K	89	192x8	4Kx8		1.25	1.6/9.6	yes	8	x	x
8	HMOS	5	28	8,16,24	4K	42	32x8	1Kx8		11	0.6/14	yes	3	x	x
8	HMOS	5	28	8,16,24	2K	59	112x8	1.8Kx8		1	2/11	yes	3	x	x
8	HMOS	5	28	8,16,24	2K	59	112x8	1804x8		1	2/11	yes	3	x	x
8	HMOS	5	40	8,16,24	4K	59	112x8	3.8K		1	2/11	yes	3	x	x
8	HMOS	5	40	8,16,24	4K	59	112x8	3776x8		1	2/11	yes	3	x	x
8	HMOS	5	40	8,16,24	4K	59	112x8	3.8Kx8		1	2/11	yes	3	x	x
8	HMOS	5	40	8,16,24	4K	59	112x8	3776x8		1	2/11	yes	3	x	x
8	HMOS	5	40	8,16,24	64K	82	128x8	2Kx8		1.5		yes	2	x	x
8	HMOS	5	40	8,16,24	64K	82	128x8			1.5		yes		x	x

Bold face indicates additional data is provided on the page noted.

© IC MASTER 1984

MICROPROCESSORS

Software Support									
		Programs							
Cross Assembler	High Level Language	Debug	Diagnostic	Edit	Alternate Sources	Comments	Device	Source	Line
						MC68008 completely code compatible with MC68000. 32 bit internal architecture, general purpose machine.	MC68008	Motorola (1506,1508)	
x	x	x	x	x	AMI, Hitachi, Fujitsu, Fairchild	On-chip clock, 16-bit timer, 31 parallel I/O lines.	MC6801	Motorola (1501,1505)	
x	x	x	x	x			MC6801-1	Motorola (1501,1505)	
x	x	x	x	x		Serial I/O, 16-bit timer, SCI, 8 baud selectable, 32 bytes standby RAM.	MC6801U4	Motorola (1501)	
x	x	x	x	x		Serial I/O.	MC6801U4-1	Motorola (1501)	5
x	x	x	x	x	AMI, EFCIS, Fairchild, Hitachi	6800 CPU plus clock and RAM, 32 bytes standby RAM.	MC6802	Motorola (1505,2045)	
x	x	x	x	x	AMI, EFCIS, Hitachi	Expansion bus, ROMless 6801.	MC6803	Motorola (1501)	
x	x	x	x	x		Serial I/O, timer, external clock, standby RAM.	MC6803E	Motorola (1501)	
x	x	x	x	x		Serial I/O, timer, ROMless 6801U4.	MC6803U4	Motorola (1501)	
x	x	x	x	x		Serial I/O, timer, expansion bus.	MC6803U4-1	Motorola (1501)	10
x		x	x	x		20-pin version of 6804P2, extensive self check.	MC6804J2	Motorola (1504)	
x	x	x	x	x	Signetics	20 bidirectional I/O lines, 64 byte data ROM, self check.	MC6804P2	Motorola (1504)	
x		x	x	x	AMI, EFCIS, Hitachi, Signetics	20 programmable bidirectional I/O lines, timer/counter.	MC6805P2	Motorola (1502,1505)	
x		x	x	x	Signetics	20 I/O, standby RAM mode, EPROM version available.	MC6805P4	Motorola (1502,1505)	
x		x	x	x	Signetics	20 programmable bidirectional I/O lines, self check, EPROM version available.	MC6805P6	Motorola (1505)	15
x		x	x	x	EFCIS, Signetics	A/D on chip, 31 I/O lines.	MC6805R2	Motorola (1502,1505)	
x		x	x	x	Signetics	4 channel 8-bit A/D converter, self check.	MC6805R3	Motorola (1502)	
x		x	x	x	Signetics	4-channel 8-bit A/D converter, SPI, watchdog timer, self check.	MC6805S2	Motorola (1505)	
x		x	x	x	Signetics	19 I/O, on chip PLL, self check.	MC6805T2	Motorola (1505)	
x		x	x	x	EFCIS, Signetics	32 I/O lines, self check.	MC6805U2	Motorola (1505)	20
x		x	x	x	Signetics	24 bidirectional I/O, self check	MC6805U3	Motorola (1505)	
x	x	x	x	x	AMI, EFCIS, Fairchild, Hitachi		MC6808	Motorola (1505)	
x	x	x	x	x	AMI, EFCIS, Fairchild, Hitachi	On chip oscillator enhanced 6800 command set.	MC6809	Motorola (1505,2045)	
x	x	x	x	x	EFCIS	External clocking for synchronization of multiprocessor systems.	MC6809E	Motorola (1505,2045)	
x	x	x	x	x	Signetics	128 bytes of dual port RAM, Intelligent peripheral controller, SCI.	MC68120	Motorola (1501, 1505,1509,1506)	25
x	x	x	x	x	Signetics	128 bytes of dual port RAM.	MC68121	Motorola (1501,1509)	
x	x	x	x	x		2K bytes of EPROM.	MC68701-1	Motorola (1501)	
x	x	x	x	x		Serial I/O, timer, 4K EPROM on chip.	MC68701U4	Motorola (1501)	
x	x	x	x	x		Same as 68701U4 except includes software security.	MC68701U5	Motorola (1501)	
x		x	x	x	Signetics	EPROM prototyping version of 6804P2.	MC68704P2	Motorola (1504)	30
x		x	x	x		20 programmable bidirectional I/O lines. Self programming bootstrap, EPROM version for 6805P2, P4, P6.	MC68705P3	Motorola (1502)	
x		x	x	x		Same as 68705P3 except PS has software security.	MC68705P5	Motorola	
x		x	x	x		4 channel A/D, 31 I/O lines (24 programmable), EPROM.	MC68705R3	Motorola	
x		x	x	x		Same as 68705R3 except includes software security.	MC68705RS	Motorola	
x		x	x	x		32 I/O lines (24 programmable) EPROM.	MC68705U3	Motorola (1502)	35
x		x	x	x		Same as 68705U3 except includes software security.	MC68705U5	Motorola (1502)	
x	x	x	x	x			MC68A01	Motorola (1501)	
x	x	x	x	x		Serial I/O, timer, expansion bus.	MC68A03	Motorola (1501)	

MICROPROCESSORS

General				Architecture										Hardware Support	
							(For Microcomputers Only)								
Data Word Size (bits)	Process Type	Supply Voltage (V)	No. of Pins	Instruction Word Size (bits)	Directly Addressable Memory (words)	No. of Basic Instructions	On-Chip RAM (bits)	On-Chip (P)ROM (bits)	DMA Capa-bility	Maximum Clock Frequency (MHz)	Instruction Time Min/Max (μs)	Interrupts	No. of Levels	Proto-typing System	In-Circuit Emulator
8	HMOS	5	40	8,16,24	64K	82	128x8	2Kx8		2		yes	2	x	x
8	HMOS	5	40	8,16,24	64K	82	128x8			2		yes		x	x
8	XMOS	5	40	8,16	4K	96	64x8			11	1.36	yes	1		
8	NMOS	5	40	8,16	4K	96	64x8			11	1.36	yes	1	x	x
8	XMOS	5	40	8,16	4K	97	128x8			11	1.36	yes	1	x	x
8	XMOS	5	40	8,16	4K	97	128x8			11	1.36	yes	1	x	x
8	XMOS	5	40	8,16	4K		256x8			11	1.36	yes	1		
8	NMOS	5		8,16	4K		256x8			11	1.36	yes	1	x	x
8	XMOS	5	40	8,16	4K		64x8	1Kx8		11	1.36	yes	1		
8	NMOS	5		8,16	4K		64x8	1Kx8		11	1.36	yes	1	x	x
8	XMOS	5	40	8,16	4K		128x8	2Kx8		11	1.36	yes	1		
8	XMOS	5	40	8,16	4K		128x8	2Kx8		11	1.36	yes	1		
8	XMOS	5	40	8,16	4K		256x8	4Kx8		11	1.36	yes	1		
8	NMOS	5		8,16	4K		256x8	4Kx8		11	1.36	yes	1		
8	NMOS	5		8,16	64K				x	4		yes		x	x
8	NMOS	5		8,16,24	64K		64x8	2.5Kx8		4	4	yes		x	x
8	NMOS	5,12	40	8,16,24	64K	74			x	3	1.5/3.75	yes	1	x	x
8	XMOS	5		8,16	4K		256	See comments		11		yes			x
8	P²CMOS	2-6		8-32	64K	158				1	1.6	yes	5	x	
8	P²CMOS	2-6		8-32	64K	158				4	1.0	yes	5	x	
8	XMOS	5		8-200	16M					10		yes		x	
8	NMOS	5	40	8-32	64K	158	26x8			4	2	yes	3		
8	NMOS	5	64	8-32	64K	140	128x8			1	2	yes	5		
8	NMOS	5	64	8-32	64K	140	64x8	6Kx8		1	2	yes	5		
8	NMOS	5	64	8-32	65K	165	256x8	No	x	12					
8	NMOS	5	64	8-32	56K	165	256x8	1Kx8	x	12					
8	NMOS	5	64	8-32	65K	153	256x8	No	x	12					
8	NMOS	5	64	8-32	60K	153	256x8	512x8	x	12					
8	NMOS	5	64	8-32	56K	165	256x8	1Kx8	x	12					
8	NMOS	5	40	8-16	4K	96	64x8			6	2.5/5	yes	1		
8	NMOS	5	40	8-16	4K	96	128x8			11	1.4/2.8	yes	1	x	x
8	NMOS	5	40	8-16	4K	96	64x8	1Kx8		6	2.5/5	yes	1		
8	NMOS	5	40	8-16	4K	96	128x8	2Kx8		11	1.4/2.8	yes	1	x	x
8	NMOS	5,12	40	8,16,24	64K	78				2	1.4/2.8	yes	1	x	
8	NMOS	5	40	8,16,24	64K	80				5	1.4/2.8	yes	4		
8	CMOS	2.5-6	40	8-16	4K	97	64x8			6	2.5/5	yes	1	x	
8	CMOS	2.5-6	40	8-16	4K	97	64x8	1Kx8		6	2.5/5	yes	1	x	
8	NMOS	5	40	8-16	4K		64x8	1Kx8		6	2.5/5	yes	1		
8	CMOS	3-6	40	8-16	4K	97	64x8	1Kx8		6	2.5/5	yes	1	x	x
8	CMOS	3-6	40	8-16	4K	97	128x8			11	1.4/2.8	yes	1	x	x
8	CMOS	3-6	40	8-16	4K	97	64x8	1Kx8		6	2.5/5	yes	1	x	x

Bold face indicates additional data is provided on the page noted.

© IC MASTER 1984

MICROPROCESSORS

Software Support										
		Programs								
Cross Assembler	High Level Language	Debug	Diagnostic	Edit	Alternate Sources	Comments	Device	Source		Line
x	x	x	x	x			**MC68B01**	**Motorola**	**(1501)**	
x	x	x	x	x		Serial I/O, timer, expansion bus.	**MC68B03**	**Motorola**	**(1501)**	
x		x	x	x	Intel, NEC, AMD, Fujitsu, Signetics	ROMless version of INS8048.	INS8035	National		
x		x	x	x	Intel	Lowpower version of INS8035.	INS8035L	National		
x		x	x	x	Intel, NEC, AMD	ROMless version of INS8049.	INS8039	National		5
x		x	x	x		Low power version of INS8039.	INS8039L	National		
x		x	x	x	Intel	ROMless version of INS8050.	INS8040	National		
x		x	x	x	Intel	ROMless version of INS8050L.	INS8040L	National		
x		x	x	x	Intel, NEC, AMD		INS8048	National		
x		x	x	x	Intel	Lowpower version of INS8048.	INS8048L	National		10
x		x	x	x	Intel, NEC, AMD	Lowpower standby mode, on-chip bettery charging.	INS8049	National		
x		x	x	x		Low power version of INS8049.	INS8049L	National		
x		x	x	x	Intel		INS8050	National		
x		x	x	x	Intel		INS8050L	National		
x	x	x	x	x		DMA logic.	INS8060	National		15
x	x	x	x	x		Tiny Basic microinterpreter, basic 8070 architecture allows high level program with minimum system.	INS8073	National		
x	x	x	x	x	AMD, Intel, NEC, Signetics, TI, Mitsubishi	Slower speeds available.	INS8080A	National		
x		x	x	x		Piggy-back microcomputer, emulates 8048/49/50, socket for program module and EPROM.	**NS87P50**	**National**	**(1524)**	
x	x	x	x	x	Eurotechnique, SMC	Fully compatible with Z80 instruction set, on chip bus controller and clock generator. NSC888 evaluation board available.	**NSC800-1**	**National**	**(1516)**	
x	x	x	x	x	Eurotechnique, SMC	Fully compatible with Z80 instruction set, on chip bus controller and clock generator. NSC888 evaluation board available.	**NSC800-4**	**National**	**(1516)**	20
x	x	x		x	Fairchild, Synertec, Eurotechnique	8 bit version of NS16032 16 bit CPU. 32 bit internal architecture. Software upward compatible with NS16032. NS16081 floating point unit available as support chip.	SC16008	National		
x	x			x	Mostek, Zilog	Z80 compatible, 158 instructions, 8080A software compatible, 26 bytes R/W memory, on chip dynamic RAM refresh circuitry.	uPD780	NEC		
x	x			x	Mostek, Zilog		uPD7800	NEC		
						48 I/O lines, 12-bit programmable timer, bus expansion capabilities.	uPD7802	NEC		
						16-Bit Multiple/Divide, ROM bus, USART	uPD7807	NEC	**(1566)**	25
						16-Bit Multiple/Divide, ROM bus, USART	**uPD7809**	**NEC**	**(1566)**	
						16-Bit ALU, A/D Converter, USART	**uPD7810**	**NEC**	**(1562)**	
						16-Bit ALU, A/D Converter, USART	**uPD7811**	**NEC**	**(1562)**	
						16-Bit Multiply/Divide, EPROM, USART	**uPD78P09**	**NEC**	**(1566)**	
x				x	AMD, Intel, Signetics, Siemens	Can be used with external RAM and ROM, 27 I/O lines, 8 bit interval timer/counter.	uPD8035L	NEC		30
		x	x	x	Fujitsu, Intel, Signetics	Can be used with external RAM and ROM, 27 I/O lines, programmable, interval timer. Pin compatible with 8039.	uPD8039L	NEC		
x				x	AMD, Intel, Signetics, Siemens	27 I/O lines, 8 bit interval timer/events counter.	uPD8048	NEC		
		x	x	x	Fujitsu, Intel, Signetics	Same as PD8039L but with 2K ROM.	uPD8049	NEC		
x	x	x	x	x	AMD, Intel, National, Signetics, TI	uPD753 is 42 pin version, slower CPU speeds available.	uPD8080AF	NEC		
x	x		x		AMD, Mitsubishi, Intel	8080A compatible.	uPD8085A-2	NEC		35
x		x	x	x	Intersil	CMOS version of PD8035L.	**uPD80C35**	**NEC**	**(1571)**	
x			x		Intersil, Intel	CMOS version of PD8048.	**uPD80C48**	**NEC**	**(1571)**	
x				x	AMD, Intel, Signetics, Siemens	Same as PD8048 but with 1K EPROM.	uPD8748	NEC		
x		x	x	x	NEC, National	CMOS version of MSM8035, low stand by power mode.	**MSM80C35**	**OKI**	**(4118)**	
x		x	x	x	NEC, National	CMOS version of MSM8039, low standby power mode.	**MSM80C39**	**OKI**	**(4118)**	40
x		x	x	x	NEC, National	CMOS version of MSM8048, low stand by power mode.	**MSM80C48**	**OKI**	**(4118)**	

MICROPROCESSORS

General				Architecture										Hardware Support	
							(For Microcomputers Only)								
Data Word Size (bits)	Process Type	Supply Voltage (V)	No. of Pins	Instruction Word Size (bits)	Directly Addressable Memory (words)	No. of Basic Instructions	On-Chip RAM (bits)	On-Chip (P)ROM (bits)	DMA Capa-bility	Maximum Clock Frequency (MHz)	Instruction Time Min/Max (μs)	Interrupts	No. of Levels	Proto-typing System	In-Circuit Emulator
8	CMOS	3-6	40	8,16,24	64K					3		yes	1		
8	CMOS	4-10.5	40	8,16,24	64K	91			x	5.0		yes	1	x	x
8	CMOS	4-10.5	40	8,16,24	64K	91			x	6.4		yes	1	x	x
8	CMOS	4-6.5	40	8,16,24	64K	91			x	3.2		yes	1	x	x
8	CMOS	4-6.5		8,16,24	64K	91			x	5	3.2/4.8	yes	1	x	x
8	CMOS	4-6.5		8,16,24	64K	91			x	2.5	2.5	yes	1	x	x
8	CMOS	3-6.5		8,16,24	64K	91			x	3.2	4/6	yes	1	x	x
8	CMOS	4-6.5		8,16,24	64K	123	64x8	2Kx8	x	5	3.2/4.8	yes	1	x	x
8	CMOS	4-6.5		8,16,24	64K	123	64x8		x	5	3.2/4.8	yes	1	x	x
8	CMOS	4-6.5		8,16,24	64K	123	64x8		x	4	3.2/4.8	yes	1	x	x
8	CMOS	4-6.5		8,16,24	64K	123	64x8		x	5	3.2/4.8	yes	1	x	x
8	CMOS	4-6.5		8,16,24	64K	123			x	4	2.0/4.0	yes	1	x	x
8	CMOS	3-6		8	8K		112			5	2.0/4.0	yes	1	x	x
8	CMOS	3-6		8	1089		64	1089		5	2.0/4.0	yes	1	x	x
8	CMOS	3-6		8	2106		112	2106		5	2.0/4.0	yes	1	x	x
8	NMOS	5	28	8,16,24	64K	56				2	1/7	yes	2	x	x
8	NMOS	5	40	8,16,24	8K	56	64x8	2Kx8		2	1/7	yes	4	x	x
8	NMOS	5	40	8,16,24	16K	60	192x8	3072x8		2	1/7	yes	10	x	x
8	NMOS	5	64	8,16,24	16K	60	192x8	3072x8		2	1/7	yes	10	x	x
8	NMOS	5	64	8,16,24	64K	60	192x8	256x8		2	1/7	yes	10	x	x
8	NMOS	5	40	8,16,24	4K	60	64x8	1.5Kx8		2	1/7	yes	7	x	x
8	NMOS	5	64	8,16,24	4K	60	64x8	1.5Kx8		2	1/7	yes	7	x	x
8	NMOS	5	64	8,16,24	8K	60	64x8	256x8		2	1/7	yes	8	x	x
8	NMOS	5	40	8,16,24	64K					2	0.5/3.5	yes	2	x	x
8	NMOS	5	64	8,16,24	64K	60	192			2	1/7	yes	10	x	x
8	CMOS	5	40	8-24	64K	68				4	0.5/3.5	yes	2	x	x
8	CMOS	5	40	8-24	64K	68				4	0.5/3.5	yes	2		
8	CMOS	5	40	8-24	64K	68				4	0.5/3.5	yes	2		
8	NMOS	5	40	8-24	64K	129	256x8	4Kx8		8	1.5/4.25	yes	6	x	x
8	NMOS	5	40	8-24	64K	62	128x8	1Kx8		10	2/6.8	yes	4	x	x
8	NMOS	5		8-32	64K					2.5		yes			
8	NMOS	5		8,16,24	32K					1.25		yes		x	x
8	NMOS	5		8,16,24	32K					2		yes		x	x
8	NMOS	5		8-16	1K		64x8	1Kx8		3	8.38/16.8	no		x	x
8	NMOS	5		8-16	4K	96	64x8			6	1.4/2.8	yes	1		
8	NMOS	5		8-16	4K	96	128x8			11	1.4/2.8	yes	1		
8	NMOS	5		8-16	4K	96	256x8			11	1.4/2.8	yes	1		
8	NMOS	5		8-16	4K	90	64x8	1Kx8		6	1.4/2.8	yes	1		
8	NMOS	5		8-16	4K	90	128x8	2Kx8		11	1.4/2.8	yes	1		
8	NMOS	5		8-16	4K		256x8	4Kx8		11	1.4/2.8	yes	1		
8	TTL	5		16	8K					8	0.2	yes		x	x
8	TTL	5		16	8K					10		yes		x	x
8	NMOS	5	40	8,16,32	64K	56			x	4	0.25/40	yes	1		
8	NMOS	5	28	8,16,32	4K	56			x	2	0.25/40	yes	1		
8	NMOS	5	28	8,16,32	8K	56			x	2	0.25/40	yes	1		

Bold face indicates additional data is provided on the page noted.

© IC MASTER 1984

MICROPROCESSORS

Software Support									
		Programs							
Cross Assembler	High Level Language	Debug	Diagnostic	Edit	Alternate Sources	Comments	Device	Source	Line
						CMOS version of MSM8085A.	MSM80C85A	OKI (4118)	
	x	x	x	x	Hughes		CDP1802	RCA (1591)	
x	x	x	x	x	Hughes		CDP1802A	RCA (1591)	
x	x	x	x	x	Hughes		CDP1802AC	RCA (1591)	
	x	x	x		Hughes		CDP1802BC	RCA (1591)	5
	x	x	x	x	Hughes		CDP1802C	RCA (1591)	
x	x	x	x	x	Hughes		CDP1802M	RCA (1591)	
x	x				Hughes	8-bit counter on board.	CDP1804AC	RCA (1591)	
x	x				Hughes	8-bit counter on board.	CDP1805AC	RCA (1591)	
x	x			x	Hughes	8-bit counter-timer on-board.	CDP1805C	RCA (1591)	10
x	x	x	x	x	Hughes	8-bit counter on board.	CDP1806AC	RCA (1591)	
x	x	x	x	x	Hughes	8-bit counter-timer on-board.	CDP1806C	RCA (1591)	
x	x				Motorola	Single chip CMOS CPU, 16 programmable bi-directional I/O lines.	CDP6805E2	RCA (1592)	
x	x				Motorola	Single chip CMOS CPU, 20 programmable bi-directional I/O lines, self check mode.	CDP6805F2	RCA (1592)	
x	x				Motorola	Single chip CMOS CPU, 32 programmable bi-directional I/O lines, self check mode.	CDP6805G2	RCA (1592)	15
x	x	x	x	x	Synertek	Bus compatible with 6800.	R6500	Rockwell	
x	x	x	x	x		Software compatible with R6502, 32 I/O lines, 16-bit counter.	R6500/1	Rockwell	
x	x	x	x	x		On board USART, two 16 bit counters, 32 I/O lines.	R6500/11	Rockwell	
x	x	x	x	x		On board USART, two 16 bit counters, 56 I/O lines.	R6500/12	Rockwell	
x	x	x	x	x		On board USART, two 16 bit counters, 32 I/O lines.	R6500/13	Rockwell	20
x	x	x	x	x		Asychronous host interface port, 16 bit counter, 23 I/O lines.	R6500/41	Rockwell	
x	x	x	x	x		Asychronous host interface port, 16 bit counter, 47 I/O lines.	R6500/42	Rockwell	
x	x	x	x	x		Asychronous host interface port, 16 bit counter, 23 I/O lines.	R6500/43	Rockwell	
x	x	x	x	x		Bus compatible with 6800, 68000.	R6502	Rockwell	
x	x	x	x	x		On board USART, 16 bit counter, 32 I/O lines without pullups.	R6511Q	Rockwell	25
					GTE, NCR	CMOS R6502	R65C02	Rockwell	
					GTE	On-chip oscillator, bus three-state capability, quadrature clock, R6500 software compatibility.	R65C102	Rockwell	
						Slave processor, bus three-state capability	R65C112	Rockwell	
x	x	x	x	x		Z8 with EPROM	71840	SEEQ (1603)	
x		x	x	x		TMS7000 with E²ROM	72710	SEEQ (1597)	30
x	x	x	x	x		4 MHz optional.	Z80/A	SGS	
x		x	x	x		Any of the general purpose registers can be used as an index register.	2650A	Signetics	
x		x	x	x		Any of the general purpose registers can be used as an index register.	2650A-1	Signetics	
		x	x	x	Intel		8021	Signetics	
					AMD, Fujitsu, Intel, National, NEC		8035	Signetics	35
					AMD, Fujitsu, Intel, National, NEC		8039	Signetics	
					AMD, Fujitsu, Intel, National, NEC		8040	Signetics	
					AMD, Fujitsu, Intel, National, NEC		8048	Signetics	
					AMD, Fujitsu, Intel, National, NEC		8049	Signetics	
							8050	Signetics	40
x			x			Bipolar with fixed instructions.	8X300	Signetics	
x		x	x	x	AMD		8X305	Signetics	
					GTE, Rockwell	On chip clock, IRQ, NMI, RYD bus compatible with MC6800.	SY6502	Synertek (1696)	
					GTE, Rockwell	On chip clock, IRQ, NMI, bus compatible with MC6800.	SY6503	Synertek (1696)	
					GTE, Rockwell	On chip clock, IRQ bus compatible with MC6800.	SY6504	Synertek (1696)	45

MICROPROCESSORS

General				Architecture										Hardware Support	
							(For Microcomputers Only)								
Data Word Size (bits)	Process Type	Supply Voltage (V)	No. of Pins	Instruction Word Size (bits)	Directly Addressable Memory (words)	No. of Basic Instructions	On-Chip RAM (bits)	On-Chip (P)ROM (bits)	DMA Capa-bility	Maximum Clock Frequency (MHz)	Instruction Time Min/Max (μs)	Interrupts	No. of Levels	Proto-typing System	In-Circuit Emulator
8	NMOS	5	28	8,16,32	4K	56			x	2	0.25/40	yes	1		
8	NMOS	5	28	8,16,32	4K	56			x	2	0.25/40	yes	1		
8	NMOS	5	28	8,16,32	8K	56				2		no			
8	NMOS	5	40	8,16,32	64K	56				4		yes	1		
8	NMOS	5	28	8,16,32	4K	56				2		yes	1		
8	NMOS	5	28	8,16,32	8K				x	2	0.25/40	yes	1		
8	NMOS	5	28	8,16,32	4K				x	2	0.25/40	yes	1		
8	HMOS	5	40	8,16,32	120K		128x8	2Kx8		4	1.5/5	yes	6		
8	HMOS	5	40	8,16,32	120K	129	128x8	2Kx8		4	1/3.4	yes	6		
8	NMOS	5	40	8,16,32	120K	129	128x8	4Kx8		4	1.5/5	yes	6		
8	NMOS	5	40	8,16,32	120K	129	128x8	4Kx8		4	1/3.4	yes	6		
8	NMOS	5	40	8,16,32	128K	129	128x8			4	1.5/5	yes	6		
8	NMOS	5	40	8,16,32	128K	129	128x8			4	1/1.4	yes	6		
8	NMOS	5	40	8,16,32	120K	129	128x8	4Kx8			1.5/5	yes	6		
8	NMOS	5	40	8,16,32	120K	129	128x8	4Kx8			1/3.4	yes	6		
8	NMOS	5		8,16,32	128K		144x8								
8	CMOS	5		8,16,32	120K		128x8	2K			1.5/5	yes			
8	NMOS	5		8,16,32	6K		64x8	1K			1.5/4.25	yes			
8	SMOS	5	40	8	64K	61	128x8			8	1.6/19.2	yes	4	x	x
8	SMOS	5	40	8	64K	61	128x8	2K		2.5	1.6/19.2	yes	4	x	x
8	SMOS	5	40	8	64K	61	128	4K		2.5	1.6/19.2	yes	4	x	x
8	SMOS	5	40	8	64K	61	128	4K		4	1.6/19.2	yes	4	x	x
8	SMOS	5	40	8	64K	61	128	4K		2.5	1.6/19.2	yes	4	x	x
8	NMOS	4.5-10.5	40	8	64K	61	128	2K		2.5	1.6/19.2	yes	4	x	x
8	NMOS	5	40	8-16	4K		64			6		yes		x	x
8	NMOS	5	40	8-16	4K		128			11		yes		x	x
8	NMOS	5		8-16	4K		64	1K		6		yes		x	x
8	NMOS	5		8-16	4K			2K		11		yes		x	x
8	NMOS	5		8,16,24	64K					3		yes		x	x
8	NMOS	5		8,16,24	64K					5		yes		x	x
8	CMOS	5		8-16	4K		128			11		yes		x	x
8	CMOS	5	40	8-16	4K	96	128	2K		11	2.5/5	yes	1	x	x
8	NMOS	5,12		16	64K					3.3		yes	4	x	x
8	NMOS	5	40	8-32	64K	158			x	2.5		yes	3	x	x
8	NMOS	5	40	8-32	64K	158			x	4		yes	3	x	x
8	NMOS	5	40	8-32	64K	158			x	6	0.7/4.2	yes	3	x	x
8	NMOS	5	40	8-32	64K	158			x	8		yes	3	x	x
8	NMOS	5	40	8-32	64K	158			x	2.5		yes	3	x	x
8	NMOS	5	40	8-32	500K				x	25		yes	2		

Bold face indicates additional data is provided on the page noted.

© IC MASTER 1984

MICROPROCESSORS

Software Support									
		Programs							
Cross Assembler	High Level Language	Debug	Diagnostic	Edit	Alternate Sources	Comments	Device	Source	Line
					GTE, Rockwell	On chip clock, IRQ, RYD bus compatible with MC6800.	**SY6505**	**Synertek (1696)**	
					GTE, Rockwell	On chip clock, IRQ bus compatible with MC6800.	**SY6506**	**Synertek (1696)**	
					GTE, Rockwell	On chip clock, RYD bus compatible with MC6800.	**SY6507**	**Synertek (1696)**	
					GTE, Rockwell	External clock, IRQ, NMI, RYD, bus compatible with MC6800.	**SY6512**	**Synertek (1696)**	
					GTE, Rockwell	External clock, IRQ, NMI, bus compatible with MC6800.	**SY6513**	**Synertek (1696)**	5
					GTE, Rockwell	External clock, IRQ, bus compatible with MC6800.	**SY6514**	**Synertek (1696)**	
					GTE, Rockwell	External clock, IRQ, RYD, bus compatible with MC6800.	**SY6515**	**Synertek (1696)**	
					SGS, Sharp, Zilog	On-chip UART, 2 counter/timers, 32 I/O lines.	Z8601	Synertek	
					SGS, Sharp, Zilog	On-chip UART, 2 counter/timers, 32 I/O lines, faster version of Z8601.	Z8601A	Synertek	
					GTE	Development device simular to Z8601 but has memory control and interface lines for 4K bytes of memory.	Z8602	Synertek	10
					GTE	Same as Z8601 but faster CPU speed.	Z8602A	Synertek	
					SGS, Sharp, Zilog, GTE	Phototyping Z8601 with socket for external 2716 EPROM.	Z8603	Synertek	
					SGS, Sharp, Zilog, GTE	Same as Z8603 but faster CPU speed.	Z8603A	Synertek	
					SGS, Sharp, Zilog, GTE	On chip UART, 2 programmable counter/timers, 32 I/O lines. Simular to Z8601.	Z8611	Synertek	
					SGS, Sharp, Zilog, GTE	Same as Z8611 but faster CPU speed.	Z8611A	Synertek	15
					Zilog	ROMless version of Z8601. 24 programmable I/O lines.	Z8681	Synertek	
						CMOS version of Z8601.	Z86C01	Synertek	
						Subset of Z8 instruction set. Programmable 8 bit counter/timer.	Z8S	Synertek	
	x					8 bit timer/event counter, optional memory expansion modules available to complement on chip ROM.	**TMS7000**	**TI (1704)**	
	x					8 bit timer/event counter, optional memory expansion modules available to complement on chip ROM.	**TMS7020**	**TI (1704)**	20
	x					8 bit timer/event counter, optional memory expansion modules available to complement on chip ROM.	**TMS7040**	**TI (1704)**	
	x					On chip UART serial port, 2 8-bit timer/counters, optional memory expansion modules available to complement on chip ROM.	**TMS7041**	**TI (1704)**	
	x					8 bit timer/event counter, 4K EPROM, optional memory expansion modules available to complement on chip EPROM.	TMS70E40	TI	
	x					Low power: 35 MW, power down feature, 8-bit interval timer/event counter, optional memory expansion module available to complement on-chip ROM.	TMS70L22	TI	
		x	x	x	AMD, Intel, National, NEC, Fujitsu, Signetics		TMP8035	Toshiba	25
		x	x	x	AMD, Intel, National, NEC, Fujitsu, Signetics		TMP8039	Toshiba	
		x	x	x	AMD, Intel, NEC, Fujitsu, Signetics	8748 has U.V. PROM.	TMP8048	Toshiba	
		x	x	x	NEC, Fujitsu, Signetics		TMP8049	Toshiba	
x	x	x	x	x	AMD, Mitsubishi, NEC	8080A compatible with multiplexed bus operation.	TMP8085A	Toshiba	
x	x	x	x	x	AMD, Mitsubishi, NEC		TMP8085A-2	Toshiba	30
x		x	x	x	NEC, National, OKI		TMP80C39	Toshiba	
x		x	x	x	NEC, National, OKI		TMP80C49	Toshiba	
x			x			Can cross assemble and simulate with DEC PDP-11.	CP1600	Western	
x	x	x	x	x	Mostek, NEC, SGS, Sharp	8080A software compatible.	**Z80**	**Zilog (1738)**	
x	x	x	x	x	Mostek, NEC, SGS, Sharp	8080A software compatible.	**Z80A**	**Zilog (1738)**	35
x	x	x	x	x	Mostek, NEC, SGS, Sharp	8080A software compatible.	**Z80B**	**Zilog (1738)**	
x	x	x	x	x	Mostek, NEC, SGS, Sharp	High speed version of Z80.	**Z80H**	**Zilog (1738)**	
x	x	x	x	x	Mostek, NEC, SGS, Sharp	Low power version of Z80, slower speeds available.	**Z80L**	**Zilog (1738)**	
						The first of a series of processors. The devices are binary code compatible with the Z80 CPU. 8 and 16 bit multiple and divide.	Z8108	Zilog	

MICROPROCESSORS

General				Architecture										Hardware Support	
							(For Microcomputers Only)								
Data Word Size (bits)	Process Type	Supply Voltage (V)	No. of Pins	Instruction Word Size (bits)	Directly Addressable Memory (words)	No. of Basic Instructions	On-Chip RAM (bits)	On-Chip (P)ROM (bits)	DMA Capa-bility	Maximum Clock Frequency (MHz)	Instruction Time Min/Max (μs)	Interrupts	No. of Levels	Proto-typing System	In-Circuit Emulator
8	NMOS	5	40	8,16,24	124K	129	128x8	2Kx8	x	4	2.2/4.25	yes	6	x	x
8	NMOS	5	40												
8	NMOS	5	40	8,16,24	124K	129	128x8			4	2.2/4.25	yes	6	x	x
8	NMOS	5	40	8,16,24	124K	129	128x8	4Kx8	x	4	1/1.5	yes	6	x	x
8	NMOS	5	40	8,16,24	124K	129	128x8	4Kx8	x	12	1/2.8	yes	6	x	x
8	NMOS	5	64	8-24	124K	129	128x8		x	4	1/1.5	yes	6	x	x
8	NMOS	5	64	8,16,24	124K	129	128x8		x	12	1/2.8	yes	6	x	x
8	NMOS	5	40	8-24	124K	129	128x8		x	4	1/1.5	yes	6	x	x
8	NMOS	5	40	8,16,24	124K	129	128x8		x	12	1/2.8	yes	6	x	x
8	NMOS	5	40	8-24	124K	129	128x8			4		yes		x	x
8	NMOS	5	40	8-24	124K	129	128x8			4		yes		x	x
8	NMOS	5	40	8-24	128K		128x8			4		yes		x	x
8	NMOS	5	40	8,16,24	124K	129	128x8		x	12	1/2.8	yes	6	x	x
8/16	HMOS	5	40	8-48	1M					8		yes	1	x	x
8/16	HMOS	5	40	8-48	1M	46	144x8		x	5	0.4/4	yes			
8/16	HMOS	5	40	8-48	1M	133				8	0.2/19	yes	1		x
8/16	HMOS	5	40	8-48	1M	133				8		yes			
8/16	NMOS	5	40	16	32K				x	10		yes	4	x	x
8/16	HMOS	5	40	8-48	1M	46				5	0.4/4	yes		x	
8/16	HMOS	5	40	8-48	1M	133				8	0.4/0.8	yes	1	x	x
8/16	HMOS	5	40	8-48	1M	150				8		yes		x	x
8/16	NMOS	5	40	8-48	1M		64x8			5		yes			
8/16	I^2L	5	64	16,32,48	128K	73				4.4	1.37/13.6	yes	17	x	
12	CMOS	5	40	12	64K					5		yes			
12	CMOS	5		12	32K					4		yes			
12	CMOS	5-10		12	4K					4		yes	1	x	
12	PMOS	5		12,24	4K					1.2		yes		x	
16	TTL/ECL	5	52	8,16	User defined		32Kx16			10	0.1	optional		x	
16	HMOS	5		8-48	1M					10		yes			
16	NMOS	5		16,32	48M					4		yes		x	x
16	NMOS	5		16,32	384K					4		yes		x	x
16	HMOS	5		8-48	1M					8		yes			
16	HMOS	5		8-48	16M	150				8		yes			
16	HMOS	5		8-48	1M	133				10		yes			
16	HMOS	5		8-48	1M					10		yes			

Bold face indicates additional data is provided on the page noted.

© IC MASTER 1984

MICROPROCESSORS

Software Support										
		Programs								
Cross Assembler	High Level Language	Debug	Diagnostic	Edit	Alternate Sources	Comments	Device	Source		Line
x	x	x	x	x	Synertek, SGS, Sharp, GTE	On-chip UART, and 2 counter/timers. 4 external interrupts, 32 I/O lines.	**Z8601**	**Zilog**	**(1753)**	
							Z8601-12	**Zilog**	**(1753)**	
x	x	x	x	x	Synertek, SGS, Sharp, GTE	Program storage in separate 2716 EPROM, 4 external interrupts. Has piggyback 24-pin socket to program memory.	**Z8603**	**Zilog**	**(1753)**	
x	x	x	x	x	Synertek, SGS, Sharp, GTE	On-Chip UART and 2 counter/timers, 32 I/O lines. 4 external interrupts.	**Z8611**	**Zilog**	**(1754)**	
x	x	x	x	x		On-chip UART, 2 counter/timers, 32 I/O lines, 4 external interrupts.	**Z8611-12**	**Zilog**	**(1754)**	5
x	x	x	x	x	Synertek, SGS, Sharp, GTE	64 pin development version. 4 external interrupts. ROMless Z8601.	**Z8612**	**Zilog**	**(1754)**	
x	x	x	x	x		Development version, 4 external interrupts, ROMless Z8601-11.	**Z8612-12**	**Zilog**	**(1754)**	
x	x	x	x	x	Synertek, SGS, Sharp, GTE	ROMless Z8. Has piggyback 24-pin socket for direct interface to program memory. Permits program storage in separate EPROMs.	**Z8613**	**Zilog**	**(1754)**	
x	x	x	x	x		ROMless Z8. Has piggyback 24-pin socket for direct interface to program memory.	**Z8613-12**	**Zilog**	**(1754)**	
x	x	x	x	x		Single chip basic interpreter with Tiny Basic in ROM.	**Z8671**	**Zilog**	**(1754)**	10
x	x	x	x	x		Single chip basic interpreter with Tiny Basic in ROM, power down bonding option.	Z8675	Zilog		
x	x	x	x	x	Synertek	ROMless Z8.	**Z8681**	**Zilog**	**(1755)**	
x	x	x	x	x		ROMless Z8.	**Z8681-12**	**Zilog**	**(1755)**	
x	x	x	x	x	Intel	Same part as iAPX88/10.	**AM8088**	**AMD**	**(1429)**	
					Intel	I/O processor, concentrator and intelligent DMA controller. 4 special purpose input interrupts, 2 DMA requests interrups, 2 general purpose interrupt outputs.	**AM8089**	**AMD**	**(1432)**	15
x	x	x	x	x	Intel, NEC	Same part as AM8088.	iAPX88/10	AMD		
					Intel	Two chip set using iAPX88/10 plus 8087 numeric data processor.	iAPX88/20	AMD		
Not required	x	x	x	x		PDP-11 compatible on chip DRAM control & clock.	DCT11-AA	DEC		
		x	x	x	AMD	I/O processor concentrator and intelligent DMA controller. 4 special purpose input interrupts, 2 DMA request interrupts, 2 general purpose interrupt outputs.	8089	Intel		
	x	x	x	x	NEC, AMD	8088 runs 5 MHz, -2 runs 8 MHz.	iAPX88/10	Intel		20
	x	x	x	x	AMD	Two chip set using iAPX88/10 plus 8087 numeric data processor.	iAPX88/20	Intel		
					AMD, Intel		uPD8088	NEC		
	x	x	x	x		Mil temperature range.	SBP9989	TI		
						PDP-8 software compatible, high performance upgrade of HM6100 CPU.	**HD6120**	**Harris**	**(1489)**	
					Intersil	PDP-8 instruction set compatible Fortrar, Basic, Focal, Pascal, available from outside vendors.	**HM6100**	**Harris**	**(1488)**	25
x	x		x		Harris	Executive PDP-8, instruction set.	IM6100	Intersil		
x	x		x				TLCS-12A	Toshiba		
x					Thompson/CSF	Three-operand ALU, 16-bit barrel shifter, instruction set optimized for high-performance intelligent controllers.	**AM29116**	**AMD**	**(1424)**	
					Intel, Fujitsu	Same part as iAPX86/10.	**AM8086**	**AMD**	**(1429,1432)**	
x	x	x	x	x	Zilog	Segmented, single step mode.	AMZ8001	AMD		30
x	x	x	x	x	Zilog	Non-segmented, single step mode.	AMZ8002	AMD		
					Intel	High performance-provides two times the performance of iAPX86. Upward compatible with iAPX86/88 software. 10 additional instruction types.	**iAPX186**	**AMD**	**(1430)**	
					Intel	High performance 80286 processor with memory management. Upward compatible with iAPX86, 88 and iAPX186 software.	**iAPX286**	**AMD**	**(1430)**	
					Mitsubishi, NEC, Mostek, Siemens, Intel, Fujitsu	Same part as AM8086.	**iAPX86/10**	**AMD**	**(1429)**	
					Intel	Two chip set using iAPX86/10 plus AM8087 numeric data processor.	**iAPX86/20**	**AMD**	**(1429)**	35

MICROPROCESSORS

General				Architecture										Hardware Support	
							(For Microcomputers Only)								
Data Word Size (bits)	Process Type	Supply Voltage (V)	No. of Pins	Instruction Word Size (bits)	Directly Addressable Memory (words)	No. of Basic Instructions	On-Chip RAM (bits)	On-Chip (P)ROM (bits)	DMA Capa-bility	Maximum Clock Frequency (MHz)	Instruction Time Min/Max (μs)	Interrupts	No. of Levels	Proto-typing System	In-Circuit Emulator
16	NMOS	5,12		16-48	64K					3.3		yes		x	
16	NMOS	5,12		16	32K					8.3		yes		x	
16	CMOS	5	40	16	2M				x	15		yes	4		
16	NMOS	5	48	8-200	64K					6		yes			
16	I^3L	5		16	32K					10		yes		x	
16	I^3L	5		16	64					10		yes		x	x
16	NMOS	5	40	8-48	1M	133				5		yes		x	x
16	NMOS	5	40	8-48	1M	133				10		yes		x	x
16	NMOS	5	40	8-48	1M	133				8		yes		x	x
16	NMOS	-3,5,12		10,20,30	65K					4		yes		x	x
16	CMOS	5	40	8-48	1M					8		yes		x	x
16	NMOS	5	64	16-80	16K	56			x	10	0.4	yes	7		
16	NMOS	5	64	16-80	16K	56			x	4	0.4	yes	7		
16	NMOS	5	64	16-80	16K	56			x	6	0.4	yes	7		
16	NMOS	5	64	16-80	16K	56			x	8	0.4	yes	7		
16	HMOS	5	68	8-48	1M	150			x	8		yes			x
16															
16	HMOS	5		8-48	16M					8	0.8	yes			x
16	HMOS	5		8,16,24,32,40,48	16M					8	0.8	yes			x
16	HMOS	5		8-48	16M					8		yes			x
16	HMOS	5		8-80	16M physical, 1000M virtual		4Kx16			8		yes		x	
16	HMOS	5			16M physical, 1000M virtual					8		yes		x	
16	HMOS	5	40	8-48	1M	133				10	0.4/0.8	yes		x	x
16	HMOS	5		8-48	1M					10		yes		x	x
16	HMOS	5		8-48	1M					10		yes	8-57	x	x
16															

Bold face indicates additional data is provided on the page noted.

© IC MASTER 1984

MICROPROCESSORS

Software Support									
		Programs							
Cross Assembler	High Level Language	Debug	Diagnostic	Edit	Alternate Sources	Comments	Device	Source	Line
					TI	Instructions include hardware multiply, divide, software compatible with 990 minicomputers.	**S9900**	**AMI (1453)**	
x	x		x			Software compatible with NOVA 3.	mN602	DataGen	
Not required	x	x	x	x		PDP-11 compatible, floating point & MMU std.	DCJ11-AC	DEC	
					National	All features of F16032 plus 8080 code software compatible, 16 bit interval architecture.	**F16016**	**Fairchild (1470)**	
x	x	x	x	x		Microcomputer performance. Multifunction instructions process several steps e.g. add/shift/check and skip.	F9440	Fairchild	5
x	x	x	x	x		Second generation Microframe microprocessor with enhanced instructions improved speed and multiprocessing capabilities using I³L bipolar tech. 16x16 bit multiply in 3.5 μsec.	**F9445**	**Fairchild (1468)**	
	x	x	x	x	Mostek, Intel, Siemens, NEC	Assembly language compatible with 8080/8085.	MBL8086	Fujitsu	
	x	x	x	x	Mostek, Intel, Siemens, NEC	Assembly language compatible with 8080/8085.	MBL8086-1	Fujitsu	
	x	x	x	x	Mostek, Intel, Siemens, NEC	Assembly language compatible with 8080/8085.	MBL8086-2	Fujitsu	
x		x	x	x		3.6 μsec add time with 3.3 MHz clock.	CP-1600	GI	10
x	x	x	x	x	Intel	Multiply and divide, multibus system compatible, 3 MHz version available, available in industrial or military temperature ranges.	**80C86**	**Harris (1479,1486)**	
					Motorola, Mostek, Rockwell, Signetics		HD68000R-10	Hitachi	
					Motorola, Mostek, Rockwell, Signetics		HD68000R-4	Hitachi	
					Motorola, Mostek, Rockwell, Signetics		HD68000R-6	Hitachi	
					Motorola, Mostek, Rockwell, Signetics		HD68000R-8	Hitachi	15
	x	x	x	x	AMD	High-performance provides two times the performance of iAPX85. Upward compatible with iAPX86/88 software to additional instruction types.	iAPX186	Intel	
						Two chip CP/M-86 operating system processor. Standard on-chip BIOS. Compatible with 8086/87/88/186 up to 8 MHz with out wait states.	iAPX186/50	Intel	
	x	x	x		AMD	High performance 80286 processor with memory management. Upward compatible with iAPX86, 88 software.	iAPX268/10	Intel	
	x	x	x		AMD	High performance 80286 processor with memory management. Upward compatible with iAPX86, 88 software.	iAPX286/10	Intel	
	x	x	x			Two chip set using iAPX286/10 plus 80287 numeric data processor.	iAPX286/20	Intel	20
		x	x			The GDP is a two chip set, IP is a single chip. Together (GDP & IP) form a system that is designed for complex, high level information management. It includes software transparent performance extensibility, multiple independent I/O subsystems, memory protection, hardware process dispatching, hardware interprocess communications, hardware dynamic storage allocation, virtual memory support and floating point.	iAPX432GDP	Intel	
		x	x			The GDP is a two chip set, IP is a single chip. Together (GDP & IP) form a system that is designed for complex, high level information management. It includes software transparent performance extensibility, multiple independent I/O subsystems, memory protection, hardware process dispatching, hardware interprocess communications, hardware dynamic storage allocation, virtual memory support and floating point.	iAPX432IP	Intel	
	x	x	x	x	NEC, Mostek, Siemens, AMD	8086 runs 5 MHz, -1 runs 10 MHz, -2 runs 8 MHz.	iAPX86/10	Intel	
	x	x	x	x	AMD	Two chip set using iAPX86/10 plus 8087 numeric data processor.	iAPX86/20	Intel	
	x	x	x	x		Two chip set using iAPX86/10 plus 80130-3 operating system processor.	iAPX86/30	Intel	25
						Two chip CP/M-86 operating system processor. Standard on-chip BIOS. Compatible with 8086/87/88/186 up to 8 MHz with out wait states.	iAPX86/50	Intel	

MICROPROCESSORS

General				Architecture										Hardware Support	
							(For Microcomputers Only)								
Data Word Size (bits)	Process Type	Supply Voltage (V)	No. of Pins	Instruction Word Size (bits)	Directly Addressable Memory (words)	No. of Basic Instructions	On-Chip RAM (bits)	On-Chip (P)ROM (bits)	DMA Capa-bility	Maximum Clock Frequency (MHz)	Instruction Time Min/Max (μs)	Interrupts	No. of Levels	Proto-typing System	In-Circuit Emulator
16	NMOS	5	48	16	64K	87	256	4K	yes	6	.5/4	yes	16	x	x
16	NMOS	5		8-48	1M					5		yes			
16	XMOS	5		8-200	16M					6		yes		x	
16	NMOS	5	40	8-48	1M					5		yes		x	x
16	NMOS	12,5,-3	40	16	65K	33			x	2	2/6	yes	1	x	
16	NMOS	5	40	16	65K	33				3		yes		x	
16	NMOS	5	40	8-48	1M	133				5					
16	NMOS	5	40	8-48	1M	133				10	0.4/0.8	yes		x	
16	NMOS	5	40	8-48	1M	133				8					
16	NMOS	5	40	8-48	1M	133				4					
16	HMOS	5		16-80	16M	56				10		yes			
16	NMOS	5,12		16,32,48	16K					3		yes			
16	I²L	5		16,32,48	65K					2		yes		x	x
16	NMOS	5,12	64	16,32,48	65K	69				3.3	2/31	yes	17	x	x
16	NMOS	5	64	16,32,48	65K	69				4.0	2	yes	17	x	x
16	NMOS	5		16,32,48	256K	84	32x16	1Kx16		24	0.5/100	yes	16	x	
16	NMOS	5	40	16,32,48	256K	96	32x16	1Kx16		24	0.5/100	yes	16	x	
16	NMOS	5	40	16	2K	73	128x16	2Kx16		4	2	yes	4		
16	NMOS	5,12	40	16,32,48	16K	69				2.5	1	yes	4	x	x
16	NMOS	5,12	40	16,32,48	16K	69				2.5	3.2/49.6	yes		x	x
16	NMOS	5	40	16	32K	73	256x16			12	3.6	yes	7	x	
16	NMOS	5,12		16	64K					3		std.		x	
16	NMOS	5,12		16	65K					3.3		std.		x	
16	NMOS	5	48	16-64	8M	110				4		yes	5	x	x
16	NMOS	5	48	16-64	8M	110				6		yes	5	x	x
16	NMOS	5	48	16-64	8M	110				10		yes	5	x	x
16	NMOS	5	40	16-64	384K	110				4		yes	5	x	x
16	NMOS	5	40	16-64	384K	110				6		yes	5	x	x
16	NMOS	5	40	16-64	64K	110				10		yes	5	x	x
16	NMOS	5	48	16-64	384K	110				10		yes	5	x	x
16	NMOS	5	40	16-64	384K	110				10		yes	5	x	x
16/32	NMOS	5	48	8-200	16M	100				6	0.4	yes	256	x	x
16/32		5	64	16,32,48,64,80	16M	56			x	4	0.4	yes	7		
16/32	NMOS	5	48	16-80	1M	56				12	0.75/78	yes	7	x	x
16/32	NMOS	5	64	16-80	16M	56				12	0.75/78	yes	7	x	x
16/32	—	5	64	16-80	16M	56			x	4	0.4	yes	7		
16/32	HMOS	5	64	16-80	16M	56			x	10	0.4	yes	7	x	x
16/32	HMOS	5	64	16-80	16M	56			x	12.5	0.4	yes	7	x	x

Bold face indicates additional data is provided on the page noted.

© IC MASTER 1984

MICROPROCESSORS

Software Support									
		Programs							
Cross Assembler	High Level Language	Debug	Diagnostic	Edit	Alternate Sources	Comments	Device	Source	Line
x	x	x	x	x	Motorola	40 I/O lines, USART, 3 timers, 90% source-code compatible with 68000. Available in expanded, 68000 bus-compatible version. Also in CMOS.	MK68200	Mostek	
					Mitsubishi, NEC	Extended temperature range.	MK8086	Mostek	
x	x	x		x	Fairchild	All features of NS10632 plus 8080 code software compatible. Available 3Q 1983.	NS16016	National	
	x	x	x	x	Iritel, Mostek, Siemens		uPD8086-2	NEC	
x	x	x	x	x	Panafacom	Five accumulator, capable of addressing 256 I/O devices.	MN1610	Panasonic	5
x	x	x	x	x	Panafacom	Five accumulator, capable of addressing 256 I/O devices. Single supply version of MN1610.	MN1611	Panasonic	
					Intel, Mostek, NEC		SAB8086	Siemens	
					Intel, Mostek, NEC		SAB8086-1	Siemens	
					Intel, Mostek, NEC		SAB8086-2	Siemens	
					Intel, Mostek, NEC		SAB8086-4	Siemens	10
					Motorola, Hitachi, Mostek, Rockwell, Phillips	General purpose register machine, supports memory to memory operations.	**SCN68000**	**Signetics**	**(1689,1690)**
					AMI	8-bit data bus, 16-bit internal op. Software compatible TM9900.	SMC9980	SMC	
x	x	x	x	x		Instructions include hardware multiply and divide software compatible with 990 minicomputer.	SBP9900A	TI	
x	x	x	x	x	AMI	Instructions include hardware multiply and divide software compatible with 990 minicomputers.	**TMS9900**	**TI**	**(1702)**
x	x	x	x	x		Same as TMS9900 except higher frequency version.	**TMS9900-40**	**TI**	**(1702)** 15
	x	x	x	x		Instruction set compatible with TMS9900.	**TMS99105A**	**TI**	**(1702)**
	x	x	x	x		Single precision floating point arithmetic capability. 7 address modes.	**TMS99110A**	**TI**	**(1702)**
		x	x	x	AMI	Same as TMS9940E, except has 2K mask ROM.	TMS9940M	TI	
x	x	x	x	x	AMI, SMC	8 bit data bus, 16 bit internal operation, software compatible with TMS9900.	TMS9980A	TI	
x	x	x	x	x		Same as TMS9980, except has internal clock and requires only +5 and + 12 power.	TMS9981	TI	20
	x	x	x	x			**TMS9995**	**TI**	**(1702)**
	x		x			Directly executes Pascal P-code.	CP9008	Western	
			x				MP1600	Western	
x	x	x	x	x	AMD, SGS, Sharp	Segmented. 16 8-bit, 8 32-bit, 4 64-bit or 16 16-bit registers.	**Z8001**	**Zilog**	**(1741)**
x	x	x	x	x	AMD, SGS, Sharp	Segmented. 16 8-bit, 8 32-bit, 4 64-bit or 16 16-bit registers.	**Z8001A**	**Zilog**	**(1741)** 25
x	x	x	x	x	AMD, SGS, Sharp	Segmented. 16 8-bit, 8 32-bit, 4 64-bit or 16 16-bit registers.	**Z8001B**	**Zilog**	**(1741)**
x	x	x	x	x	AMD, SGS, Sharp	Non-segmented. 16 8-bit, 8 32-bit, 4 64-bit or 16 16-bit registers.	**Z8002**	**Zilog**	**(1741)**
x	x	x	x	x	AMD, SGS, Sharp	Non-segmented. 16 8-bit, 8 32-bit, 4 64-bit or 16 16-bit registers.	**Z8002A**	**Zilog**	**(1741)**
x	x	x	x	x	AMD, SGS, Sharp	Non-segmented. 16 8-bit, 8 32-bit, 4 64-bit or 16 16-bit registers.	**Z8002B**	**Zilog**	**(1741)**
x	x	x	x	x	AMD, SGS, Sharp	Virtual memory, segmented addresses.	**Z8003**	**Zilog**	**(1742)** 30
x	x	x	x	x	AMD, SGS, Sharp	Virtual memory, binary compatible with Z8001/Z8002, non-segmented.	**Z8004**	**Zilog**	**(1742)**
x	x	x	x	x	National	32 bit interval architecture, software multiply and divide.	**F16032**	**Fairchild**	**(1470)**
						MKB68000 available screened to MIL-STD883.	MK68000	Mostek	
x	x	x	x	x	Motorola	8 bit data bus version of 68000.	MK68008	Mostek	
x	x	x	x	x	Motorola	Virtual memory 68000 processor	MK68010	Mostek	35
						68000 screened to MIL-STD-883.	MKB68000	Mostek	
x	x	x	x	x	Hitachi, Mostek, Rockwell, Signetics	High performance processor with seventeen 32-bit general-purpose registers.	**MC68000L10**	**Motorola**	**(1507)**
x	x	x	x	x	Hitachi, Mostek, Rockwell, Signetics	High performance processor with seventeen 32-bit general-purpose registers.	**MC68000L12**	**Motorola**	**(1507)**

MICROPROCESSORS

General				Architecture										Hardware Support	
							(For Microcomputers Only)								
Data Word Size (bits)	Process Type	Supply Voltage (V)	No. of Pins	Instruction Word Size (bits)	Directly Addressable Memory (words)	No. of Basic Instructions	On-Chip RAM (bits)	On-Chip (P)ROM (bits)	DMA Capa-bility	Maximum Clock Frequency (MHz)	Instruction Time Min/Max (μs)	Interrupts	No. of Levels	Proto-typing System	In-Circuit Emulator
16/32	HMOS	5	64	16-80	16M	56			x	4	0.4	yes	7	x	x
16/32	HMOS	5	64	16-80	16M	56			x	6	0.4	yes	7	x	x
16/32	HMOS	5	64	16-80	16M	56			x	8	0.4	yes	7	x	x
16/32	HMOS	5	64	16-80	16M	56			x	10	0.4	yes	7	x	x
16/32	XMOS	5	48	8-200	16M	161			x	10	0.4	yes	256	x	
16/32	XMOS	5	48	8-200	16M	161				4	0.4	yes		x	
16/32	XMOS	5	48	8-200	16M	161			x	6	0.67	yes	256	x	
32			84		4G		4Kx8		x	5	0.05				
32	NMOS	5	2x64	32	16M	221					1.25/200	no			
32	CMOS	5	84	16-32	256Mb	65			x	16		yes	7	x	
32	XMOS	5	60	8-200	16Mb	86			x	10	0.4	yes	256	x	x

Bold face indicates additional data is provided on the page noted.

© IC MASTER 1984

MICROPROCESSORS

Software Support									
		Programs							
Cross Assembler	High Level Language	Debug	Diagnostic	Edit	Alternate Sources	Comments	Device	Source	Line
x	x	x	x	x	Hitachi, Mostek, Rockwell, Signetics	High performance processor with seventeen 32-bit general-purpose registers.	MC68000L4	Motorola	
x	x	x	x	x	Hitachi, Mostek, Rockwell, Signetics	High performance processor with seventeen 32-bit general-purpose registers.	**MC68000L6**	**Motorola** (1507)	
x	x	x	x	x	Hitachi, Mostek, Rockwell, Signetics	High performance processor with seventeen 32-bit general-purpose registers.	**MC68000L8**	**Motorola** (1507)	
x	x	x	x	x	Hitachi, Mostek, Rockwell, Signetics	Enhanced 68000 supporting true virtual memory with taster instruction set. Relocatable vector table to support multiple operating systems.	**MC68010**	**Motorola** (1506,1508)	
x	x	x		x	Fairchild	32 bit internal architecture, software multiply and divide, BCD arithmetic. Hardware 32x32 bit multiply in gusec with NS16081 floating point unit. Supports demand-paged virtual memory and virtual machine capability with NS16082 memory management unit.	**NS16032-10**	**National** (1513)	5
x	x	x		x	Fairchild		**NS16032-4**	**National** (1513)	
x	x	x		x	Fairchild	32 bit internal architecture, software multiply and divide, BCD arithmetic. Hardware 32x32 bit multiply in gusec with NS16081 floating point unit. Supports demand-paged virtual memory and virtual machine capability with NS16082 memory management unit.	**NS16032-6**	**National** (1513)	
						Transputer	T424	Inmos	
	x						iAPX432	Intel	
					Hitachi, Mostek, Signetics	MC68000, 68010 and 68008 are upward compatible with 68020. Separate 32-bit data and address bus. On-chip cache for speed enhancement and co-processor interface to extend CPU functions.	**MC68020**	**Motorola** (1506,1508)	10
x	x	x		x		32 bit internal/external architecture. Error correction (ECC) bus handling. NS16032 compatability.	**NS32032**	**National** (1513)	

MICROPROCESSOR–System Components

This section presents the major microprocessor system devices organized into system groups, ie F8, 6800, 8080, etc. It includes those RAM's, ROM's and PROM's which are unique to a system. It omits most general purpose memories as they are listed in the Memory section. Similarly, buffers, line drivers, transceivers, UART's, etc. are covered briefly here as they are presented in depth in the Digital and Interface sections.

Bit Slice

Macrologic Bipolar

Function	Device	Source	
Buffer (16x4 First-in first-out memory. See also Memory-FIFO's)	9403AC	Fairchild	
	9403AM	† Fairchild	
	N9403	**Signetics**	**(1660)**
Buffer (64x4 First-in first-out memory. See also Memory-FIFO's)	9423C	Fairchild	
	9423M	† Fairchild	
CRC Generator/Checker (See also Interface-Error Checking Circuits)	9401C	Fairchild	
	9401M	† Fairchild	
	N9401	**Signetics**	**(1656)**
	S9401	**† Signetics**	**(1656)**
Data Access Register (performs memory address arithmetic)	9407C	Fairchild	
	9407M	† Fairchild	
Data Encryption, 4 Device Set	9414STC	Fairchild	
	9414STM	Fairchild	
RAM (16x4) Write-While-Read (See also Digital-TTL-Memories)	9410C	Fairchild	
	9410M	† Fairchild	

Macrologic CMOS

Function	Device	Source	
Arithmetic Logic Register Stack	F4705BC	Fairchild	
	F4705BM	† Fairchild	
Data Access Register (performs memory address arithmetic)	F4707BC	Fairchild	
	F4707BM	† Fairchild	
Data Path Switch (for closing data path loops around arithmetic/logic networks such as the F4705)	F4704BC	Fairchild	
	F4704BM	† Fairchild	
Microprogram Sequencer	F4708C	Fairchild	
	F4708M	† Fairchild	
Parallel/Serial First-In First-Out Memory (FIFO) (See also Memory-FIFO's)	F4703BC	Fairchild	
	F4703BM	† Fairchild	
Program Stack (16x4 LIFO Memory)	F4706BC	Fairchild	
	F4706BM	† Fairchild	
Programmable Bit Rate Generator (See also Digital-CMOS-Miscellaneous-Bit Rate Generator)	F4702BC	Fairchild	
	F4702BM	† Fairchild	
	HD4702-2	**† Harris**	**(1492)**
	HD4702-9	**Harris**	**(1492)**
RAM (16x4, clocked) Write-While-Read (See also Digital-CMOS-Memories)	F4710BC	Fairchild	
	F4710BM	† Fairchild	
RAM (16x4) (See also Memory-RAM's)	F4725BC	Fairchild	
	F4725BM	† Fairchild	
RAM (256x1) (See also Memory-RAM's)	F4720C	Fairchild	
	F4720M	† Fairchild	
RAM (256x4) (See also Memory-RAM's)	F4726BC	Fairchild	
	F4726BM	† Fairchild	
ROM (256x8) (See also Memory-ROMS)	F4735BC	Fairchild	
	F4735BM	† Fairchild	

2 Bit Slice

3000

Function	Device	Source	
Central Processing Element	**N3002**	**Signetics**	**(1665)**
	S3002	**† Signetics**	**(1665)**
Microprogram Control Unit	**N3001**	**Signetics**	**(1663)**
	S3001	**† Signetics**	**(1663)**

4 Bit Slice

2900

Function	Device	Source	
Microprocessor, 4-Bit Slice, Cascadable	**AM2901BC**	**AMD**	**(1401)**
	AM2901BM	**† AMD**	**(1401)**
	AM2903AC	**AMD**	**(1402)**
	AM2903AM	**† AMD**	**(1402)**
	AM2903C	**AMD**	**(1402)**
	AM2903M	**† AMD**	**(1402)**
	IDM2901A-2	National	
	IDM2901AC	National	
	IDM2901AM	† National	
Bus Transceivers (See also Interface-Line Transceivers)	**AM2905C**	**AMD**	**(1405)**
	AM2905M	**† AMD**	**(1405)**
	AM2906C	**AMD**	**(1405)**
	AM2906M	**† AMD**	**(1405)**
	AM2907C	**AMD**	**(1406)**
	AM2907M	**† AMD**	**(1406)**
	AM2912C	**AMD**	**(1409)**
	AM2915AC	**AMD**	**(1411)**
	AM2915AM	**† AMD**	**(1411)**
	AM2916AC	**AMD**	**(1411)**
	AM2916AM	**† AMD**	**(1411)**
	AM2917AC	**AMD**	**(1412)**
	AM2917AM	**† AMD**	**(1412)**
	AM2927C	**AMD**	**(1417)**
	AM2928C	**AMD**	**(1417)**
	AM2946C	**AMD**	**(1420)**
	AM2947C	**AMD**	**(1420)**
	AM2948C	**AMD**	**(1420)**
	AM2949C	**AMD**	**(1420)**
Clock Generator and Driver	**AM2925C**	**AMD**	**(1416)**
	AM2925M	**† AMD**	**(1416)**
Control Store Sequencer	N8X02	Signetics	
Decoder/Demultiplexer	**AM2924C**	**AMD**	**(1416)**
DMA Address Generator	**AM2940C**	**AMD**	**(1418)**
	AM2940M	**† AMD**	**(1418)**
DMA Address Generator/Programmable Timer/Counter	**AM2942C**	**AMD**	**(1419)**
	AM2942M	**† AMD**	**(1419)**
Dynamic Memory Controller	AM2964B	AMD	
	AM2968	AMD	
	MC54F2968	**† Motorola**	**(822)**
	MC74F2968	**Motorola**	**(822)**
Error Correction and Detection Circuit, 16-Bit	AM2960C	AMD	
	AM2960M	† AMD	
	MC54F2960	**Motorola**	**(822)**
	MC74F2960	Motorola	
Error Correction Circuit	9428	Fairchild	
Error Correction Multiple Bus Buffer, 4-Bit (datapath interface between AM2960, data bus, and RAM)	**AM2904C**	**AMD**	**(1404)**
	AM2904M	**† AMD**	**(1404)**
	AM2961C	AMD	
	AM2961M	† AMD	
	AM2962C	AMD	
	MC54F2961	**† Motorola**	**(822)**
	MC54F2962	**† Motorola**	**(822)**
	MC74F2961	**Motorola**	**(822)**
	MC74F2962	**Motorola**	**(822)**
Look-Ahead Carry Generator	AM2902AC	AMD	
	AM2902AM	† AMD	
	IDM2902C	National	
	IDM2902M	† National	
Memory Timing Controller with EDAC	AM2969	† AMD	
	MC54F2969	**† Motorola**	**(822)**
	MC74F2969	**Motorola**	**(822)**
Memory Timing Controller without EDAC	AM2970	AMD	
	MC54F2970	**† Motorola**	**(822)**
	MC74F2970	**Motorola**	**(822)**
Microprogram Sequencer, 4-Bit	**AM2909AC**	**AMD**	**(1407)**
	AM2909C	**AMD**	**(1407)**
	AM2911A	**AMD**	**(1407)**
	IDM2909AC	National	
	IDM2909AM	† National	
	IDM2911AC	National	
	IDM2911AM	† National	
Multiplier Accumulator, 12x12 bit	AM29509	AMD	
	AM29L509	AMD	
Multiplier Accumulator, 16x16 bit	AM29510	AMD	
	AM29L510	AMD	
Multiplier, 16x16 bit	AM29L516	AMD	
	AM29L517	AMD	
Next Address Control Unit (use with 2911)	**AM29811AC**	**AMD**	**(1426)**
	AM29811AM	**† AMD**	**(1426)**
	IDM29811C	National	
	IDM29811M	† National	
Priority Encoder	IDM29902C	National	
	IDM29902M	† National	
Priority Interrupt Encoder, Vectored	**AM2914C**	**AMD**	**(1410)**
	AM2914M	**† AMD**	**(1410)**
Priority Interrupt Expander (for 2914)	**AM2913C**	**AMD**	**(1409)**
	AM2913M	**† AMD**	**(1409)**
PROM(256x4). See 29760/1 series in PART NUMBER INDEX and also MEMORY-PROMs			
PROM(32x8). See 29750/1 series in PART NUMBER INDEX and also MEMORY-PROMs			
RAM(16x1). See 29700/1/2/3 series in PART NUMBER INDEX and also MEMORY-RAMs, Static			

† Military Temperature Range (−55° to 125°C)

* Typical Value

Bold face indicates additional data is provided on the page noted.

© IC MASTER 1984

MICROPROCESSOR–System Components (Cont'd)

4 Bit Slice
2900 (Cont'd)

Function	Device	Source	Line
RAM(256x1), See 29720/1 series in PART NUMBER INDEX and also MEMORY-RAMs, Static			
RAM (16x4) Two Output Ports			
	AM29705C	**AMD**	**(1425)**
	AM29705M	**† AMD**	**(1425)**
	AM29707	**AMD**	**(1425)**
	IDM29705AC	National	
	IDM29705AM	† National	
Quad Bus Driver/Receiver			5
	AM2926C	**AMD**	**(1417)**
	AM2929C	**AMD**	**(1417)**
Quad D Flip-Flop with Two Output Ports			
	AM2919C	**AMD**	**(1413)**
	AM2919M	**† AMD**	**(1413)**
Quad D Register with Both Standard and Three-State Outputs (See also Digital-TTL-Flip-Flops)			
	AM25LS18C	AMD	10
	AM25LS18M	† AMD	
	AM2918C	**AMD**	**(1413)**
	AM2918M	**† AMD**	**(1413)**
Quad-Gated Flip-Flop			
	IDM29908C	National	
	IDM29908M	† National	
Octal Buffer/Line Driver/Line Receiver			15
	AM2958C	**AMD**	**(1423)**
	AM2959C	**AMD**	**(1423)**
Octal D-Type Flip-Flip, Clear and Clock Enable, Three-State	**AM2920C**	**AMD**	**(1414)**
	AM2920M	**† AMD**	**(1414)**
Octal D-Type Flip-Flop, Three State			
	IDM29901C	National	
	IDM29901M	† National	20
Octal Latch, Three State			
	AM2956C	**AMD**	**(1422)**
	AM2957C	**AMD**	**(1422)**
Octal Memory Driver, Three-State			
	AM2965C	AMD	
	AM2965M	† AMD	
	AM2966C	AMD	25
	AM2966M	† AMD	
	54S730	† MMI	
	54S734	† MMI	
	74S730	MMI	
	74S734	MMI	30
Octal Register, Three State			
	AM2954C	**AMD**	**(1422)**
	AM2955C	**AMD**	**(1422)**
One-of-Eight Decoder, with Polarity Control, Three-State			
	AM2921C	**AMD**	**(1414)**
	AM2921M	**† AMD**	**(1414)**
6-bit Comparator with 1 of 4 Chip Select			
	AM29806	AMD	35
8-Bit Bidirectional I/O Port			
	AM2952C	AMD	
	AM2952M	† AMD	
	AM2953C	AMD	
	AM2953M	† AMD	
8-bit Diagnostic Register with Serial Shadow Register			
	AM29818	AMD	40
8-Bit Parallel I/O Port			
	AM2950C	**AMD**	**(1421)**
	AM2950M	**† AMD**	**(1421)**
	AM2951C	**AMD**	**(1421)**
	AM2951M	**† AMD**	**(1421)**
8-Input Multiplexer, with Control Storage			
	AM2922C	**AMD**	**(1415)**
	AM2922M	**AMD**	**(1415)**
	AM2923C	**AMD**	**(1415)** 45

Function	Device	Source	Line
9-bit Equal to Comparator			
	AM29809	AMD	
16-Way Branch Control Unit (use with 2909)			
	AM29803AC	**AMD**	**(1426)**
	AM29803AM	**† AMD**	**(1426)** 50
	IDM29803C	National	
	IDM29803M	† National	
64-Bit (16x4) Edge-Triggered Register, Three-State			
	IDM29903C	National	

10800

Function	Device	Source	Line
Arithmetic Logic Unit			
	MC10800	Motorola	
Bidirectional Translator with Latch			
	MC10804	Motorola	55
	MC10805	Motorola	
ECL Transceiver with Latch			
	MC10807	Motorola	
Memories (See Digital-ECL-Memories and Memory-PROMs/ROMs)			
Microprogram Control Function			
	MC10801	Motorola	
Multibit Shifter (16-Bit programmable shifter)			
	MC10808	Motorola	60
Dual Address Register (32x9 stack)			
	MC10806	Motorola	

74S481/74LS481

Function	Device	Source	Line
Microprocessor			
	SN74LS481	**TI**	**(1041)**
	SN74S481	**TI**	**(1041)**
Control Element (for next address generators)			20
	SN54S482	**† TI**	**(1042)**
	SN74S482	**TI**	**(1042)** 65
Erasable PROM(512x8), See 54S/74S472 series in PART NUMBER INDEX and also MEMORY-PROMs			
Field Programmable Logic Array			
	SN74S330	TI	25
	SN74S331	TI	
FIFO (See also Memory-FIFO's)			
	SN74S225	**TI**	**(996)** 70
RAM(256x4), See 54S/74S208 series in PART NUMBER INDEX and also MEMORY-RAMs, Static			30

8 Bit Slice
888

Function	Device	Source	Line
Microprocessor, 8-Bit Slice			
	SN54AS888	**† TI**	**(1111,1129)**
	SN54AS889	**† TI**	**(1111,1129)** 35
	SN74AS888	**TI**	**(1111,1129)**
	SN74AS889	**TI**	**(1111,1129)** 75
Microsequencer			
	SN54AS890	**† TI**	**(1112,1142)**
	SN54AS891	**† TI**	**(1112,1142)**
	SN74AS890	**TI**	**(1112,1142)**

EPIC

Function	Device	Source	Line
Microprocessor, CMOS			
	GP001AD	RCA	80
Address Select Unit			
	GP504AD	RCA	
Bus Interface	GP506AD	RCA	
Emulating Controller			
	GP501AD	RCA	
General Processor Unit Controller			
	GP508AD	RCA	
Interrupt Control Unit			
	GP507AD	RCA	85
Level Shifter	GP511AD	RCA	
Memory Controller			
	GP509AD	RCA	
RAM (1024x4)	GP201AD	RCA	
Register Select Unit			
	GP505AD	RCA	
ROM (4096 bit)	GP301AD	RCA	90
	GP302AD	RCA	
Shifter Function			
	GP510AD	RCA	
8x8-Bit Multiplier			
	GP503AD	RCA	

1 Bit
14500

Function	Device	Source	Line
Microprocessor, Industrial Control Unit			
	MC14500B	Motorola	
Latch, 8-Bit	MC14597BA	† Motorola	95
	MC14597BC	Motorola	
	MC14598BA	† Motorola	
	MC14598BC	Motorola	
	MC14599BA	† Motorola	
	MC14599BC	Motorola	100

4 Bit
1400

Function	Device	Source	Line
Microcomputer, CMOS			
	MN1450	**Panasonic (1588)**	
	MN1453	**Panasonic (1588)**	
	MN1454	**Panasonic (1588)**	
	MN1455	**Panasonic (1588)**	
Microcomputer, Evaluator			
	MN1499	**Panasonic (1587,1588)**	105
	MN1499A	**Panasonic (1587,1588)**	
Microcomputer, External Memory			
	MN1498	**Panasonic (1588)**	
Microcomputer	**MN1400**	**Panasonic (1587)**	
	MN1402	**Panasonic (1587)**	
	MN1403	**Panasonic (1587)**	110
	MN1404	**Panasonic (1587)**	
	MN1405	**Panasonic (1587)**	
	MN1430	**Panasonic (1587)**	
	MN1432	**Panasonic (1587)**	
	MN1435	**Panasonic (1587)**	115
Clock Circuit	MN1206	Panasonic	
CRT Interface	MN1207	Panasonic	
D/A Converter	MN1204A	Panasonic	
	MN1204B	Panasonic	
I/O Expander, Three-State			
	MN1202	Panasonic	120
Dual 4-Bit Data Latch			
	MN1201	Panasonic	

1500

Function	Device	Source	Line
Microcomputer	**MN1541**	**Panasonic (1589)**	
	MN1542	**Panasonic (1589)**	
	MN1544	**Panasonic (1589)**	
	MN1562	**Panasonic (1589)**	125
	MN1564	**Panasonic (1589)**	
Evaluator	**MN1599**	**Panasonic (1589)**	
I/O Expander	**MN1591**	**Panasonic (1589)**	

† Military Temperature Range (−55° to 125°C)

* Typical Value

Bold face indicates additional data is provided on the page noted.

MICROPROCESSOR–System Components (Cont'd)

Function	Device	Source	Line
4 Bit			
2100			
Microcomputer, Low Power			
	TMS2240	**TI**	**(1709)**
Microcomputer with On-Board Complex Sound Generator			
	TMS2132	TI	
Program Development Device			
	SE2100P	TI	
	SE2130P	TI	
	SE2400P	TI	
6000			
Microcomputer	SAA6000	ITT	
6400			
Microcomputer	LM6402	Sanyo	
	LM6405	Sanyo	
8840/50			
Microcomputer, CMOS, Clock, RAM, ROM, I/O			
	MB8851	Fujitsu	
	MB8851A	Fujitsu	
	MB8851L	Fujitsu	
	MB8853	Fujitsu	
	MB8854A	Fujitsu	
	MB8854L	Fujitsu	
	MB8855	Fujitsu	
	MB8857	Fujitsu	
	MB8858	Fujitsu	
Microcomputer, NMOS, Clock, RAM, ROM, I/O			
	MB8841	Fujitsu	
	MB8842	Fujitsu	
	MB8843	Fujitsu	
	MB8844	Fujitsu	
	MB8845	Fujitsu	
	MB8846	Fujitsu	
	MB8847	Fujitsu	
	MB8848	Fujitsu	
	MB8849	Fujitsu	
88200			
Microcomputer, CMOS, Clock, RAM, ROM, I/O			
	MB88201	Fujitsu	
	MB88202	Fujitsu	
88400			
Microcomputer, NMOS, Clock, RAM, ROM, I/O			
	MB88401	Fujitsu	
	MB88411	Fujitsu	
	MB88413	Fujitsu	
	MB88421	Fujitsu	
	MB88423	Fujitsu	
88500			
Microcomputer, CMOS, Clock, RAM, ROM, I/O			
	MB88501	Fujitsu	
	MB88503	Fujitsu	
	MB88535	Fujitsu	
	MB88536	Fujitsu	
	MB88541	Fujitsu	

Function	Device	Source	Line
COP400			
Microprocessor, COP2440 without ROM			
	COP2404	National	
Microcontroller, CMOS, RAM, ROM, I/O			
	COP324C	**National**	**(1527)**
	COP325C	**National**	**(1527)**
	COP344C	**National**	**(1527)**
	COP345C	**National**	**(1527)**
Microcontroller, Piggyback EPROM			
	COP2440R	National	
	COP2441R	National	
	COP402M	National	
	COP420R	National	
	COP440R	National	
	COP444LR	**National**	**(1527)**
Microcontroller, RAM, ROM, I/O			
	COP342	National	
Microcontroller, ROMless, Dual CPU			
	COP2304	National	
	COP2404	National	
Microcontroller, ROMless			
	COP402	National	
	COP404	**National**	**(1525)**
Microcontroller (with ROM)			
	COP210C	**† National**	**(1526)**
	COP211C	**† National**	**(1526)**
	COP310C	**National**	**(1526)**
	COP310L	**National**	**(1526)**
	COP311C	National	
	COP311L	National	
	COP320	National	
	COP320L	National	
	COP321	National	
	COP321L	National	
	COP340	† National	
	COP341	† National	
	COP410C	**National**	**(1526)**
	COP410L	**National**	**(1526)**
	COP411C	**National**	**(1526)**
	COP411L	**National**	**(1526)**
	COP420	National	
	COP420L	National	
	COP421	National	
	COP421L	National	
	COP440	National	
	COP441	National	
	COP442	National	
	COP444L	**National**	**(1527)**
	COP445L	**National**	**(1527)**
Microcontroller, Single-Chip, Dual CPU			
	COP2340	National	
	COP2341	National	
	COP2342	National	
	COP2440	National	
	COP2441	National	
	COP2442	National	
Frequency Generator/Counter Peripheral			
	COP452	National	
Liquid Crystal Display Controller			
	COP472	National	
Piggyback Microcontroller with EPROM Socket			
	COP2440R	National	
	COP420R	National	
	COP440R	National	
	COP444LR	National	
RAM (4x64) and Timer			
	COP398	National	
	COP498	National	

Function	Device	Source	Line
Vacuum Fluorescent Display Driver			
	COP370	National	
	COP470	National	
4x64 Serial RAM (CMOS)			
	COP399	National	
	COP499	National	
8-Bit A/D Converter			
	COP430	National	
	COP431	National	
	COP432	National	
	COP434	National	
	COP438	National	
256-Bit Serial E²PROM			
	COP494	**National**	**(4067)**
HD4470			
Microcomputer, 4-Bit			
	HD4470	Hitachi	
	HD44790	Hitachi	
HMCS-40			
Microcomputer, 4-Bit			
	HMCS42	Hitachi	
	HMCS43	Hitachi	
	HMCS43C	Hitachi	
	HMCS44A	Hitachi	
	HMCS44C	Hitachi	
	HMCS45A	Hitachi	
	HMCS45C	Hitachi	
	HMCS46C	Hitachi	
	HMCS47C	Hitachi	
	HMSC42C	Hitachi	
OLMS40			
Microcomputer (CMOS), I/O, Display Outputs, Timer			
	MSM58421	**OKI**	**(4118)**
	MSM58422	**OKI**	**(4118)**
Microcomputer (CMOS), ROM, RAM, Timer/Counter, I/O			
	MSM5842	**OKI**	**(4118)**
	MSM5845	**OKI**	**(4118)**
Microprocessor, Real-Time Clock Calendar			
	MSM58321	**OKI**	**(4118)**
Column Data Register for LCD			
	MSM5839	**OKI**	**(4118)**
Row Scanning Controller for LCD DOT Matrix Driver			
	MSM5838	**OKI**	**(4118)**
Serial to Parallel Converter and LED Driver			
	MSM58371	**OKI**	**(4118)**
Four Digit LED Driver			
	MSM58282	**OKI**	**(4118)**
Four Digit VF Driver			
	MSM58283	**OKI**	**(4118)**
Five Digit LCD Driver			
	MSM58292	**OKI**	**(4118)**
Five Digit VF Driver			
	MSM58293	**OKI**	**(4118)**
SM-4			
Microcomputer	SM-4	Sharp	
	SM-5	Sharp	
Evaluation Device			
	LI3010	Sharp	
TLCS-43			
Microcomputer	TLCS-43	Toshiba	

† Military Temperature Range (−55° to 125°C)

* Typical Value

Bold face indicates additional data is provided on the page noted.

© IC MASTER 1984

MICROPROCESSOR–System Components (Cont'd)

Function	Device	Source	Line
4 Bit			
TLCS-46			
Microcomputer	TLCS-46	Toshiba	
TMS1000			
Microcomputer (CMOS)			
	TMS1000C	TI	(1708,1709)
	TMS1004C	TI	
	TMS1070C	TI	(1708)
	TMS1100C	TI	(1708)
	TMS1200C	TI	(1708,1709)
	TMS1270C	TI	(1708)
	TMS1300C	TI	(1708)
Microcomputer	**TMS1000**	TI	(1708)
	TMS1070	TI	(1708)
	TMS1100	TI	(1708)
	TMS1200	TI	(1708)
	TMS1270	TI	(1708)
	TMS1300	TI	(1708)
Arithmetic Processor			
	TMS0117NLP	TI	
	TMS1018	TI	
Capacitive Input			
	TMS1976	TI	
I/O Expander	TMS1024	TI	
	TMS1025	TI	
Program Development Device			
	SE1000C	TI	
	SE1000P	TI	
	SE1004C	TI	
	SE1100C	TI	
	SE1400P	TI	
	SE2200P	TI	
Programmable Timer Controller			
	TMS1020NLL	TI	
ROMless TMS1000 Family Evaluator			
	SE1000C	TI	
	SE1000P	TI	
	SE1004C	TI	
	SE1100C	TI	
	SE1400P	TI	
	SE2200P	TI	
Timer/Controller			
	TMS1121	TI	
User Programmable Climate Controller			
	TMS2732NLL	**TI**	**(4230)**
TMS2000			
Microcomputer, Low Power			
	TMS2220	**TI**	**(1709)**
Microcomputer	**TMS2100**	**TI**	**(1709)**
	TMS2170	**TI**	**(1709)**
	TMS2240	TI	
	TMS2300	**TI**	**(1709)**
	TMS2370	**TI**	**(1709)**
	TMS2400	**TI**	**(1709)**
	TMS2470	**TI**	**(1709)**
	TMS2600	**TI**	**(1709)**
	TMS2670	**TI**	**(1709)**
	TMS3132	TI	
ROMless TMS2000 Family Evaluator			
	SE2100P	TI	
	SE2130P	TI	
	SE2400P	TI	
WD40			
Microcontroller	CR1872	Western	
Prototyping Device			
	CR2872	Western	
uCOM-7			
Microcomputer, FIP Driver			
	μPD7519	**NEC**	**(1578)**
Microcomputer, General Purpose Driver			
	μPD7506	**NEC**	**(1578)**
	μPD7507	**NEC**	**(1578)**
	μPD7507S	**NEC**	**(1578)**
	μPD7508	**NEC**	**(1578)**
	μPD7508A	**NEC**	**(1578)**
	μPD7508H	**NEC**	**(1578)**
	μPD7528	**NEC**	**(1578)**
	μPD7538	**NEC**	**(1578)**
Microcomputer, LCD Driver			
	μPD7501	**NEC**	**(1578)**
	μPD7502	**NEC**	**(1578)**
	μPD7503	**NEC**	**(1578)**
	μPD7514	**NEC**	**(1578)**
Microcomputer, LED Driver			
	μPD7520	**NEC**	**(1578)**
Microcomputer, Vacuum Fluorescent Driver			
	μPD7508A	NEC	
	μPD7519	NEC	
	μPD7528	NEC	
	μPD7537	**NEC**	**(1578)**
	μPD7538	NEC	
μCOM-75			
Microcomputer	μCOM-75	NEC	
	μPD7527	**NEC**	**(1578)**
4/8 Bit			
PPS-4, PPS-8			
Microcomputer (PPS-4/1)			
	MM75	Rockwell	
	MM76EL	Rockwell	
	MM78	Rockwell	
	MM7899	Rockwell	
	MM78L	Rockwell	
	MM78LA	Rockwell	
	MM78LS	Rockwell	
	MM79LS	Rockwell	
	MM89LS	Rockwell	
Microprocessor Evaluation Circuit (for PPS-4/1)			
	A7699	Rockwell	
Microprocessor (for PPS-4/2)			
	11660	Rockwell	
Microprocessor (for PPS-4)			
	12660	Rockwell	
Microprocessor (for PPS-8/2)			
	12806	Rockwell	
Microprocessor (for PPS-8)			
	11806	Rockwell	
Bus Interface Circuit (BIC)			
	10738	Rockwell	
Clock Generator (CLK) (for PPS-4, PPS-8)			
	10706	Rockwell	
Direct Memory Access Controller (DMA) (for PPS-8)			
	10817	Rockwell	
Display Controller (DC)			
	10814	Rockwell	
Floppy Disk Controller (FDC) (for PPS-8)			
	10936	Rockwell	
General Purpose Input/Output (GPI/O)			
	10696	Rockwell	
	11696	Rockwell	
General Purpose Keyboard and Display Control (GPKD)			
	10788	Rockwell	
Interval Timer	11049	Rockwell	
Keyboard/Printer Controller (KPC)			
	10815	Rockwell	
Parallel Data Controller (PDC) (for PPS-8, PPS-8/12)			
	10453	Rockwell	
Printer Controller (PC)			
	10789	Rockwell	
	RC7000	Rockwell	
RAM (256x4) (for PPS-4, PPS-4/2)			
	10432	Rockwell	
RAM (256x8) (for PPS-8, PPS-8/2)			
	10809	Rockwell	
RAM (512x4) (for PPS-4, PPS-4/2)			
	10932	Rockwell	
RAM (4K) Interface			
	10929	Rockwell	
ROM (1024x8)	A05XX	Rockwell	
ROM (2048x8)	A52XX	Rockwell	
ROM (4096x8)	A66XX	Rockwell	
ROM (8192x8)	A88XX	Rockwell	
ROM-RAM (for PPS 8/2)			
	A21XX	Rockwell	
ROM-RAM (for PPS-4)			
	A07XX	Rockwell	
	A08XX	Rockwell	
	A20XX	Rockwell	
ROM-RAM (for PPS-4/2)			
	A17XX	Rockwell	
Serial Data Controller (SDC)			
	10930	Rockwell	
Telecommunications Data Interface (includes modem)			
	10371	Rockwell	
Victor Dot Matrix Printer Controller (VPC)			
	10736	Rockwell	
	15380	Rockwell	
8 Bit			
1600			
Microprocessor			
	CP1600	GI	
ROM (2048x10), Graphics			
	R03-9502	GI	
ROM (2048x8), Graphics			
	R03-9503	GI	
1650			
Microcomputer	PIC1650A	GI	
	PIC1654	GI	
	PIC1655A	GI	
	PIC1656	GI	
	PIC1670	GI	
	PIC1672	GI	
1800			
Note: 1800 series devices generally are available in 4-12 V and 4-6 V versions. Consult manufacturers for availability.			
Microcomputer, RAM, ROM, Counter/Timer			
	CDP1804AC	**† RCA**	**(1591)**
Microcomputer with Pascal Kernel in 2K ROM			
	CDP1804PC	**RCA**	**(1591)**

† Military Temperature Range (−55° to 125°C)

* Typical Value

Bold face indicates additional data is provided on the page noted.

MICROPROCESSOR–System Components (Cont'd)

8 Bit

1800 (Cont'd)

Function	Device	Source	Line
Microprocessor, Counter/Timer			
	CDP1806AC	**† RCA**	**(1591)**
Microprocessor, RAM, Counter/Timer			
	CDP1805AC	**† RCA**	**(1591)**
Microprocessor			
	HCMP1802A	Hughes	
	HCMP1802AC	Hughes	
	HCMP1802BC	Hughes	
	HMMP1802A	† Hughes	
	HMMP1802AC	† Hughes	
	HMMP1802BC	† Hughes	
	CDP1802A	**† RCA**	**(1591)**
	CDP1802AC	**† RCA**	**(1591)**
	CDP1802BC	**† RCA**	**(1591)**
Color Generator Controller			
	CDP1862	**† RCA**	**(1595)**
	CDP1862C	**† RCA**	**(1595)**
Keyboard Encoder			
	CDP1871A	**RCA**	**(1595)**
	CDP1871AC	**RCA**	**(1595)**
Latch/Decoder Memory Interface			
	CDP1866	**† RCA**	**(1595)**
	CDP1866C	**† RCA**	**(1595)**
	CDP1867	**† RCA**	**(1595)**
	CDP1867C	**† RCA**	**(1595)**
	CDP1868	**† RCA**	**(1595)**
	CDP1868C	**† RCA**	**(1595)**
	CDP1881	**RCA**	**(1595)**
	CDP1881C	**RCA**	**(1595)**
	CDP1882	**RCA**	**(1595)**
	CDP1882C	**RCA**	**(1595)**
	CDP1883	RCA	
Multiply-Divide Circuit			
	HCMP1855	Hughes	
	HCMP1855C	Hughes	
	HMMP1855	† Hughes	
	HMMP1855C	† Hughes	
	CDP1855	**† RCA**	**(1595)**
	CDP1855C	**† RCA**	**(1595)**
N-Bit Decoder (for I/O interface)			
	HCMP1853	Hughes	
	HCMP1853C	Hughes	
	HMMP1853	† Hughes	
	HMMP1853C	† Hughes	
	CDP1853	**† RCA**	**(1595)**
	CDP1853C	**† RCA**	**(1595)**
Programmable I/O Interface			
	HMMP1851	† Hughes	
	HMMP1851C	† Hughes	
	CDP1851	**† RCA**	**(1595)**
	CDP1851C	**† RCA**	**(1595)**
Programmable Interrupt Controller			
	CDP1877	**RCA**	**(1595)**
	CDP1877C	**RCA**	**(1595)**
Programmable Tone Generator, 8-Bit			
	CDP1863	**† RCA**	**(1595)**
	CDP1863C	**† RCA**	**(1595)**
RAM (32x8) (See also Memory-RAM's)			
	HCMP1824	Hughes	
	HCMP1824C	Hughes	
	HMMP1824	† Hughes	
	HMMP1824C	† Hughes	
	CDP1824	**† RCA**	**(1594)**
	CDP1824C	**† RCA**	**(1594)**
RAM (64x8) (See also Memory-RAM's)			
	CDP1826C	**RCA**	**(1594)**
RAM (128x8) (See also Memory-RAM's)			
	CDP1823	**† RCA**	**(1594)**
	CDP1823C	**† RCA**	**(1594)**
RAM (256x4) (See also Memory-RAM's)			
	HCMP1822C	Hughes	
	HMMP1822C	† Hughes	
	CDP1822	**† RCA**	**(1594)**
	CDP1822C	**† RCA**	**(1594)**
RAM (1024x1) (See also Memory-RAM's)			
	CDP1821	**† RCA**	**(1594)**
	CDP1821C	**† RCA**	**(1594)**
Real-Time Clock (time and calendar information in BCD format from seconds to months)			
	CDP1879	**† RCA**	**(1595)**
	CDP1879C-1	**† RCA**	**(1595)**
ROM (512x8) (See also Memory-ROM's)			
	HCMP1831	Hughes	
	HCMP1831C	Hughes	
	HCMP1832	Hughes	
	HCMP1832C	Hughes	
	HMMP1831	† Hughes	
	HMMP1831C	† Hughes	
	HMMP1832	† Hughes	
	HMMP1832C	† Hughes	
	CDP1831	**† RCA**	**(1593)**
	CDP1831C	**† RCA**	**(1593)**
	CDP1832	**† RCA**	**(1593)**
	CDP1832C	**† RCA**	**(1593)**
ROM (1024x8) (See also Memory-ROM's)			
	HCMP1833	Hughes	
	HCMP1833C	Hughes	
	HCMP1834	Hughes	
	HCMP1834C	Hughes	
	HMMP1833	† Hughes	
	HMMP1833C	† Hughes	
	HMMP1834	† Hughes	
	HMMP1834C	† Hughes	
	CDP1833	**† RCA**	**(1593)**
	CDP1833C	**† RCA**	**(1593)**
	CDP1834	**† RCA**	**(1593)**
	CDP1834C	**† RCA**	**(1593)**
ROM (2048x8) (See also memory-ROMs)			
	HCMP1835	Hughes	
	HCMP1835C	Hughes	
	HMMP1835	† Hughes	
	HMMP1835C	† Hughes	
	HMMP1836	† Hughes	
	HMMP1836C	† Hughes	
	CDP1835C	**† RCA**	**(1593)**
	CDP1837C	**† RCA**	**(1593)**
TV Interface (PAL)			
	CDP1864	**† RCA**	**(1595)**
	CDP1864C	**† RCA**	**(1595)**
UART	HCMP1854A	Hughes	
	HCMP1854AC	Hughes	
	HMMP1854A	† Hughes	
	HMMP1854AC	† Hughes	
	CDP1854A	**† RCA**	**(1595)**
	CDP1854AC	**† RCA**	**(1595)**
	CDP6551	RCA	
	CDP6853	**RCA**	**(1595)**
Video Display Controller			
	HMMP1861	† Hughes	
	HMMP1861C	† Hughes	
	CDP1861	**† RCA**	**(1595)**
	CDP1861C	**† RCA**	**(1595)**
Video Interface System (1869 is an address and sound generator	**CDP1869C**	**† RCA**	**(1595)**
	CDP1870C	**† RCA**	**(1595)**
	CDP1876C	**† RCA**	**(1595)**
Dual Counter/Timer (two 16-bit programmable down counters independently controlled by separate control registers)	**CDP1878**	**† RCA**	
	CDP1878C	**† RCA**	**(1595)**
1 of 8 Binary Decoder			
	CDP1873C	**† RCA**	**(1595)**
4-Bit Buffer/Separator (for memory interface)			
	HCMP1856	Hughes	
	HCMP1856C	Hughes	
	HMMP1856	† Hughes	
	HMMP1856C	† Hughes	
	CDP1856	**† RCA**	**(1595)**
	CDP1856C	**† RCA**	**(1595)**
4-Bit Bus Buffer/Separator (for I/O interface)			
	HCMP1857	Hughes	
	HCMP1857C	Hughes	
	HMMP1857	† Hughes	
	HMMP1857C	† Hughes	
	CDP1857	**† RCA**	**(1595)**
	CDP1857C	**† RCA**	**(1595)**
4-Bit Latch with Dual 1 of 4 Decoders			
	HCMP1858	Hughes	
	HCMP1858C	Hughes	
	HMMP1858	† Hughes	
	HMMP1858C	† Hughes	
	CDP1858	**† RCA**	**(1595)**
	CDP1858C	**† RCA**	**(1595)**
4-Bit Latch with 1 of 4 Decoder			
	HCMP1859	Hughes	
	HCMP1859C	Hughes	
	HMMP1859	† Hughes	
	HMMP1859C	† Hughes	
	CDP1859	**† RCA**	**(1595)**
	CDP1859C	**† RCA**	**(1595)**
6-Bit Latch with 1 of 4 Decoder			
	CDP1882	RCA	
	CDP1882C	RCA	
	CDP1883	RCA	
7-Bit Latch with Decoder for 8Kx8 Memories			
	CDP1883C	RCA	
8-Bit Input/Output Port			
	HCMP1852	Hughes	
	HCMP1852C	Hughes	
	HMMP1852	† Hughes	
	HMMP1852C	† Hughes	
	CDP1852	**† RCA**	**(1595)**
	CDP1872C	**† RCA**	**(1595)**
	CDP1874C	**† RCA**	**(1595)**
	CDP1875C	**† RCA**	**(1595)**

2650

Function	Device	Source	Line
Microprocessor			
	SCN2650A	Signetics	
Advanced Video Display Controller			
	SCN2674	Signetics	
Display Character and Graphics Generator			
	SC2670AC3	Signetics	
	SC2670BC3	Signetics	
Multi-Protocol Communications Circuit (includes SDLC, BiSync)	**SCN2652A**	**Signetics**	**(1670)**
Polynomial Generator/Checker			
	SCN2653A	**Signetics**	**(1671)**
Programmable Communication Interface			
	SCN2651C	**Signetics**	**(1669)**
	SCN2661A	**Signetics**	**(1673)**
	SCN2661B	**Signetics**	**(1673)**
	SCN2661C	**Signetics**	**(1673)**
	COM2651	SMC	
	COM2661	SMC	
	SY2661	**Synertek**	**(1696)**

† Military Temperature Range (−55° to 125°C)

* Typical Value

Bold face indicates additional data is provided on the page noted.

© IC MASTER 1984

MICROPROCESSOR–System Components (Cont'd)

Function	Device	Source	Line
8 Bit			
2650 (Cont'd)			
Programmable Keyboard and Communications Controller			
	SCN2671A	**Signetics**	**(1678)**
Programmable Video Timing Controller			
	SCN2672A	**Signetics**	**(1680)**
Video Attributes Controller			
	SCB2673A	**Signetics**	**(1681)**
	SCB2673B	**Signetics**	**(1681)**
	SCN2673A	**Signetics**	**(1681)**
	SCN2673B	**Signetics**	**(1681)**
	SCB2675	**Signetics**	**(1683)**
Dual Universal Asynchronous Receiver/Transmitter			
	SCN2681	**Signetics**	**(1675)**
Quad Transceivers (See also Interface-Line Transceivers)			
	N8T26	AMD	
	MC8T26A	Motorola	
	MC8T28	Motorola	
	DS8T26A	National	
	DS8T28	National	
Hex Buffers/Inverters (See also Digital-TTL-Buffers/ Inverters 8T95, 8T96, 8T97, 8T98)			
	MC8T95	Motorola	
	MC8T96	Motorola	
	MC8T97	Motorola	
	MC8T98	Motorola	
	N8T95	**Signetics**	**(876)**
	N8T96	**Signetics**	**(876)**
	N8T97	**Signetics**	**(876)**
	N8T98	**Signetics**	**(876)**
	S8T95	† Signetics	
	S8T97	**† Signetics**	**(876)**
	S8T98	**† Signetics**	**(876)**
3870			
Programmable CRT Video Control Unit			
	MK3807	Mostek	
Microcomputer, EPROM, 64-Byte Scratchpad RAM, Timer, I/O	**F38E70**	**Fairchild**	**(1456)**
Microcomputer, Piggyback EPROM, Emulates all MK3870 Devices	MK38P70/02	Mostek	
Microcomputer, Piggyback EPROM, USART, Emulates all MK3870 Devices	MK38P73/02	Mostek	
Microcomputer, Piggyback EPROM	MK38P70	Mostek	
Microcomputer, ROM, 64-Byte Executable RAM, 64-Byte Scratchpad RAM, Timer I/O			
	F3872	Fairchild	
	F3876	Fairchild	
	F38L72	Fairchild	
	F38L76	Fairchild	
	MK3870/12	Mostek	
	MK3870/22	Mostek	
	MK3870/32	Mostek	
	MK3870/42	Mostek	
	MC3870	Motorola	
	M3872	SGS	
Microcomputer, ROM, 64-Byte Scratchpad RAM, Timer, I/O			
	F3870	**Fairchild**	**(1456)**
	F3878	Fairchild	
	F38C70	Fairchild	
	F38E70	Fairchild	
	MK3870/10	Mostek	
	MK3870/20	Mostek	
	MK3870/30	Mostek	
	MK3870/40	Mostek	
			(Continued)

Function	Device	Source	Line
Microcomputer, ROM, 64-Byte Scratchpad RAM, Timer, I/O (Cont'd)			
	M3870	SGS	
	MPU3870	SMC	
Microcomputer, ROM, 64-Byte Scratchpad RAM, Timer, I/O, USART	MK3873/10	Mostek	
	MK3873/20	Mostek	
Microcomputer, ROM, 64-Byte Scratchpad RAM, 64-Byte Executable RAM, Timer, I/O, USART			
	MK3873/12	Mostek	
	MK3873/22	Mostek	
Microcomputer, ROM, 64-Byte Scratchpad RAM, 64-Byte Executable RAM, Timer, I/O, USART, Battery Backup			
	MK3875/22	Mostek	
	MK3875/42	Mostek	
Microcomputer, 28-pin version of 3870			
	MK2870	Mostek	
Clock, RAM, Serial I/O			
	MK3805	Mostek	
	MK3806	Mostek	
Serial Control Unit			
	SCU20	Mostek	
6500			
Note: The 6500 series is bus compatible with 6800 series devices			
Microcomputer	R6500/1-10	Rockwell	
Microprocessor, Clock, RAM, IO			
	R6500/11	Rockwell	
	R6500/12	Rockwell	
	R6500/13	Rockwell	
Microprocessor			
	G65SC02	GTEMicro	
	G65SC03	GTEMicro	
	G65SC04	GTEMicro	
	G65SC05	GTEMicro	
	G65SC06	GTEMicro	
	G65SC07	GTEMicro	
	G65SC102	GTEMicro	
	G65SC103	GTEMicro	
	G65SC104	GTEMicro	
	G65SC105	GTEMicro	
	G65SC106	GTEMicro	
	G65SC107	GTEMicro	
	G65SC112	GTEMicro	
	G65SC115	GTEMicro	
	G65SC12	GTEMicro	
	G65SC13	GTEMicro	
	G65SC14	GTEMicro	
	G65SC15	GTEMicro	
	R6500	Rockwell	
	R6502	Rockwell	
	R6503	Rockwell	
	R6504	Rockwell	
	R6505	Rockwell	
	R6506	Rockwell	
	R6507	Rockwell	
	R6512	Rockwell	
	R6513	Rockwell	
	R6514	Rockwell	
	R6515	Rockwell	
	SY6502	**Synertek**	**(1696)**
	SY6502A	**Synertek**	**(1696)**
	SY6502B	**Synertek**	**(1696)**
	SY6502C	**Synertek**	**(1696)**
	SY6503	**Synertek**	**(1696)**
	SY6503A	**Synertek**	**(1696)**
	SY6504	**Synertek**	**(1696)**
	SY6504A	**Synertek**	**(1696)**
	SY6505	**Synertek**	**(1696)**
	SY6505A	**Synertek**	**(1696)**
			(Continued)

Function	Device	Source	Line
Microprocessor			(Cont'd)
	SY6506	**Synertek**	**(1696)**
	SY6506A	**Synertek**	**(1696)**
	SY6507	**Synertek**	**(1696)**
	SY6507A	**Synertek**	**(1696)**
	SY6512	**Synertek**	**(1696)**
	SY6512A	**Synertek**	**(1696)**
	SY6513	**Synertek**	**(1696)**
	SY6513A	**Synertek**	**(1696)**
	SY6514	**Synertek**	**(1696)**
	SY6514A	**Synertek**	**(1696)**
	SY6515	**Synertek**	**(1696)**
	SY6515A	**Synertek**	**(1696)**
	SY65C00	Synertek	
	SY65C02	**Synertek**	**(1696)**
	SY65C06	**Synertek**	**(1696)**
	SY65C12	**Synertek**	**(1696)**
	SY65C13	**Synertek**	**(1696)**
	SY65C14	**Synertek**	**(1696)**
	SY65C15	**Synertek**	**(1696)**
Analog Input, Multiplexer, A/D Converter			
	MP21	Burr-Brown	
Asynchronous Communications Interface Adapter			
	G65SC51	GTEMicro	
	R6551	Rockwell	
	SY6551	**Synertek**	**(1696)**
	SY6551A	**Synertek**	**(1696)**
	SY65C51	**Synertek**	**(1696)**
Asynchronous Communications Interface Adaptor			
	MD65SC51	Mitel	
Asynchronous Word Communications Interface Adapter			
	MD65SC58	Mitel	
CRT Controller	R6545	Rockwell	
Dot-Matrix Printer Controller			
	R6592	Rockwell	
Emulator Device			
	R6500/1E	Rockwell	
Mini-Floppy Disc Controller			
	MB8876A	Fujitsu	
	MB8877A	Fujitsu	
	SY6591	**Synertek**	**(1696)**
	SY6591A	**Synertek**	**(1696)**
Note: The 6500 series is bus compatible with 6800 series devices			
Peripheral Interface Adapter			
	G65SC21	GTEMicro	
	G65SC22	GTEMicro	
	MD65SC28	Mitel	
	R6520	Rockwell	
	R6522	Rockwell	
	SY6520A	**Synertek**	**(1696)**
	SY6521	**Synertek**	**(1696)**
	SY6521A	**Synertek**	**(1696)**
	SY6522	**Synertek**	**(1696)**
	SY6522A	**Synertek**	**(1696)**
Peripheral Interface Adaptor			
	MD65SC22	Mitel	
RAM, ROM, I/O and Interval Timer			
	R6530	Rockwell	
	SY6530	Synertek	
RAM(128x8), I/O, and Timer			
	G65SC32	GTEMicro	
	SY6532	**Synertek**	**(1696)**
	SY6532A	**Synertek**	**(1696)**
	SY65C32	**Synertek**	**(1696)**
RAM(128x8), ROM, I/O, and Counter/Timer			
	R6531	Rockwell	
ROM(2048x8) (See Memory-ROM's)			

† Military Temperature Range (−55° to 125°C)

* Typical Value

Bold face indicates additional data is provided on the page noted.

MICROPROCESSOR–System Components (Cont'd)

8 Bit

6800

Function	Device	Source		Line
Microcomputer, Clock, Timer, RAM, ROM, PLL, I/O				
	MC68705T2	**Motorola**	**(1505)**	
Microcomputer (CMOS), EPROM, RAM, Timer, I/O				
	MC146805G2	**Motorola**	**(1503)**	
Microcomputer (CMOS), RAM, ROM, Clock, Timer, I/O				
	MC146805F2	**Motorola**	**(1503,1505)**	
	MC14680G2	Motorola		
Microcomputer (CMOS), RAM, ROM, Timer, I/O				
	MC146805G2	**Motorola**	**(1503,1505)**	5
	CDP6805F2	**RCA**	**(1592)**	
	CDP6805G2	**RCA**	**(1592)**	
Microcomputer (CMOS), RAM, Timer, I/O				
	CDP6805E2	**RCA**	**(1592)**	
Microcomputer, (EPROM), ROM, Clock, Timer, A/D, I/O				
	MC68705R3	Motorola		
Microcomputer (EPROM)				
	MC68701	**Motorola**	**(1501)**	10
	MC68701-1	**Motorola**	**(1501)**	
	MC68701C	**Motorola**	**(1501)**	
	MC68701C-1	**Motorola**	**(1501)**	
	MC68705P3	**Motorola**	**(1502)**	
	MC68705R3	Motorola		15
	MC68705U3	**Motorola**	**(1502)**	
Microcomputer (external clock)				
	F6801E	Fairchild		
Microcomputer (external ROM), RAM, Clock, Timer, I/O				
	HD6803	Hitachi		
Microcomputer (external ROM)				
	S6803	AMI		
	S6803N/R	AMI		20
	F6803	Fairchild		
	MC6803	**Motorola**	**(1501)**	
	MC6803-1	**Motorola**	**(1501)**	
	MC6803C	**Motorola**	**(1501)**	
	MC68A03	**Motorola**	**(1501)**	25
	MC68B03	**Motorola**	**(1501)**	
Microcomputer, RAM, ROM, Clock, Timer, A/D, I/O				
	MC68705R2	**Motorola**	**(1502,1505)**	
Microcomputer	**S6801**	**AMI**	**(1450)**	
	S6805	**AMI**	**(1451)**	
	F6801	Fairchild		30
	HD6801	Hitachi		
	HD6805	Hitachi		
	MC6801	**Motorola**	**(1501,1505)**	
	MC6801-1	**Motorola**	**(1501,1505)**	
	MC6801C	**Motorola**	**(1501,1505)**	35
	MC6801U4	**Motorola**	**(1501)**	
	MC6803U4	**Motorola**	**(1501)**	
	MC6805P2	**Motorola**	**(1502,1505)**	
	MC6805P4	**Motorola**	**(1502,1505)**	
	MC6805P6	**Motorola**	**(1505)**	40
	MC6805U2	**Motorola**	**(1505)**	
	MC68A01	**Motorola**	**(1501)**	
	MC68B01	**Motorola**	**(1501)**	
	EF6801	Thomson-CSF		
	EF6805P2	Thomson-CSF		45
Microprocessor (CMOS), RAM, Timer, I/O				
	MC146805E2	**Motorola**	**(1503,1505)**	
Microprocessor (external clock)				
	S6809(E)	**AMI**	**(1448)**	
	S68A09(E)	**AMI**	**(1448)**	
	S68B09(E)	**AMI**	**(1448)**	
	F6809E	**Fairchild**	**(1459)**	50
	F68A09E	**Fairchild**	**(1459)**	
	F68B09E	**Fairchild**	**(1459)**	
	MC6809E	**Motorola**	**(1505,2045)**	
	MC68A09E	Motorola		
	MC68B09E	Motorola		55
Microprocessor (internal clock, 128x8 RAM)				
	S6802	AMI		
	S68A02	AMI		
	S68B02	AMI		
	F6802	**Fairchild**	**(1461)**	
	F6882	**Fairchild**	**(1461)**	60
	F68A02	Fairchild		
	HD6303	Hitachi		
	HD6802	Hitachi		
	MC6802	**Motorola**	**(1505,2045)**	
	MC68A02	Motorola		65
	MC68B02	Motorola		
	EF6802	Thomson-CSF		
Microprocessor (internal clock)				
	S6809	**AMI**	**(1448)**	
	S68A09	**AMI**	**(1448)**	
	S68B09	**AMI**	**(1448)**	70
	F6809	**Fairchild**	**(1459)**	
	F68A09	**Fairchild**	**(1459)**	
	F68B09	**Fairchild**	**(1459)**	
	HD6809	Hitachi		
	HD68A09	Hitachi		75
	HD68B09	Hitachi		
	MC6809	**Motorola**	**(1505,2045)**	
	MC68A09	Motorola		
	MC68B09	Motorola		
	EF6809	Thomson-CSF		80
Microprocessor (6800 plus internal clock)				
	F6808	**Fairchild**	**(1461)**	
	HD6808	Hitachi		
	MD68SC08	Mitel		
	MC6808	**Motorola**	**(1505)**	
	MC68A08	Motorola		85
	MC68B08	Motorola		
	EF6808	Thomson-CSF		
Microprocessor				
	S6800	AMI		
	S68A00	AMI		
	S68B00	AMI		90
	F6800	**Fairchild**	**(1454,1458,1461)**	
	F68A00	Fairchild		
	F68B00	Fairchild		
	HD6800	Hitachi		
	HD68A00	Hitachi		95
	HD68B00	Hitachi		
	MC6800	**Motorola**	**(1505,2045)**	
	MC68A00	Motorola		
	MC68B00	Motorola		
	EF6800	Thomson-CSF		100
	EF6805R2	Thomson-CSF		
Advanced Data Link Controller				
	S6854	AMI		
	S68A54	AMI		
	S68B54	AMI		
	F3864	Fairchild		105
	F6854	**Fairchild**	**(1464)**	
	F6856	**Fairchild**	**(1460)**	
	F68A54	**Fairchild**	**(1464)**	

(Continued)

Function	Device	Source		Line
Advanced Data Link Controller			(Cont'd)	
	F68B54	Fairchild		
	MC6854	**Motorola**	**(1505)**	110
	MC68A54	Motorola		
	MC68B54	Motorola		
Asynchronous Communications Interface Adapter (ACIA)				
	S6850	AMI		
	S68A50	AMI		
	S68B50	AMI		115
	F6850	**Fairchild**	**(1463)**	
	F68A50	Fairchild		
	F68B50	Fairchild		
	HD6850	Hitachi		
	HD68A50	Hitachi		120
	MC6850	**Motorola**	**(1505)**	
	MC6850M	**† Motorola**	**(1505)**	
	MC68A50	Motorola		
	MC68B50	Motorola		
	EF68A50	Thomson-CSF		125
	EF68B50	Thomson-CSF		
	EF6850	Thomson-CSF		
Bus Monitor	MD68SC49	Mitel		
Bus Transceiver, (The 6880 is also called 8T26 and the 6889 the 8T28, See Interface-Transceivers)				
	MC6880A	Motorola		
	MC6889	Motorola		130
Clock Buffer	MPQ6842	Motorola		
Clock Generator, 2 Phase				
	MC6875	Motorola		
	MC6875A	Motorola		
Clock (real time) Plus RAM				
	MC146818	Motorola		
	CDP6818	**RCA**	**(1595)**	135
Clock, 2 Phase (MC6870/71 from Motorola Component Products Dept., Franklin Park, IL)				
	HD26501	Hitachi		
	MC6870	Motorola		
	MC6871	Motorola		
Cluster Terminal Controller				
	MC68122	Motorola		
	MC68122-1	Motorola		140
CRT Controller	**S68045**	**AMI**	**(1452)**	
	S68A045	**AMI**	**(1452)**	
	S68B045	**AMI**	**(1452)**	
	F6845	**Fairchild**	**(1460)**	
	HD6845	Hitachi		145
	HD68A45	Hitachi		
	HD68B45	Hitachi		
	MC6835	**Motorola**	**(1505)**	
	MC6845	**Motorola**	**(1505)**	
	MC6845M	**† Motorola**	**(1505)**	150
	MC68A35	Motorola		
	MC68A45	Motorola		
	MC68B35	Motorola		
	MC68B45	Motorola		
	SY68045	**Synertek**	**(1696)**	155
	SY6845R	**Synertek**	**(1696)**	
D/A Converter	**MC6890**	**Motorola**	**(3068)**	
	MC6890A	**† Motorola**	**(3068)**	
Data Security Device (data encryption standard)				
	MC6859	**Motorola**	**(1505)**	
Digital Modulator (for differential phase shift keying system)	**MC6862**	**Motorola**	**(1505)**	160
Digital Time/Space Crosspoint Switch				
	MT8981	Mitel		
DMA Controller	**F6844**	**Fairchild**	**(1462)**	
	HD6844	Hitachi		
	HD68A44	Hitachi		
	HD68B44	Hitachi		165
	MC6844	**Motorola**	**(1505)**	
	MC6844M	**† Motorola**	**(1505)**	

(Continued)

† Military Temperature Range (−55° to 125°C)

* Typical Value

Bold face indicates additional data is provided on the page noted.

© IC MASTER 1984

MICROPROCESSOR–System Components (Cont'd)

Function	Device	Source	
8 Bit			
6800 (Cont'd)			
DMA Controller (Cont'd)			
	MC68A44	Motorola	
	MC68B44	Motorola	
DMA Processor (serial)			
	MC6855	Motorola	
Erasable PROM (1024x8) See Memory-PROMs, 1024x8			
Floating Point ROM (for MC6809)			
	MC6839	**Motorola**	**(1505)**
	MC68A39	Motorola	
	MC68B39	Motorola	
Floppy Disc Controller			
	HD6843	Hitachi	
	HD68A43	Hitachi	
	MC6843	**Motorola**	**(1505)**
	FD1793-02	Western	
	FD1797-02	Western	
General Purpose Interface Adapter (IEEE 488 bus)			
	F68488	**Fairchild**	**(1463)**
	MC68488	**Motorola**	**(1505)**
	MC68488M	**† Motorola**	**(1505)**
	MC68A488	Motorola	
	MC68B488	Motorola	
	HEF4738	**Signetics**	**(865,899)**
High-Speed Universal Byte-Synchronous Data Switch			
	MD68SC84	Mitel	
Industrial Interface Adaptor			
	MD68SC22	Mitel	
	MD68SC23	Mitel	
	MC6822	**Motorola**	**(1505)**
Memory Address Multiplexer for 16K RAMs			
	MC3442A	Motorola	
Memory Controller for 4K to 64K Dynamic RAMs			
	MC3480	Motorola	
Memory Management Unit			
	C68A29	Motorola	
	MC6829	**Motorola**	**(1505)**
	MC68B29	Motorola	
Modem	**MC6860**	**Motorola**	**(1505,3536)**
	MC6860L	**Motorola**	**(1505,3536)**
Note: The 6800 series is bus compatible with 6500 series devices.			
Parallel Interface			
	CDP6823	**RCA**	**(1595)**
Peripheral Interface Adapter, (PIA)			
	S6821	AMI	
	S68A21	AMI	
	S68B21	AMI	
	F6820	Fairchild	
	F6821	**Fairchild**	**(1462)**
	F68A21	Fairchild	
	F68B21	Fairchild	
	HD6821	Hitachi	
	HD68A21	Hitachi	
	HD68B21	Hitachi	
	MD68SC20	Mitel	
	MC146823	Motorola	
	MC6821	**Motorola**	**(1505)**
	MC68A21	Motorola	
	MC68B21	Motorola	
	SY6520	**Synertek**	**(1696)**
	SY65C20	**Synertek**	**(1696)**
	SY65C22	**Synertek**	**(1696)**
	SY6820	Synertek	
			(Continued)

Function	Device	Source	
Peripheral Interface Adapter, (PIA) (Cont'd)			
	SY6821	**Synertek**	**(1696)**
	SY68B20	Synertek	
	SY68B21	Synertek	
	EF6821	Thomson-CSF	
	EF68A21	Thomson-CSF	
	EF68B21	Thomson-CSF	
Peripheral Interface Adaptor, (PIA)			
	MD68SC21	Mitel	
Priority Interrupt Controller			
	~~**MC6828**~~	~~**Motorola**~~	~~**(1505)**~~
	MC8507	Motorola	
Programmable Counter/Timer, Dual			
	CDP6848	**RCA**	**(1595)**
Programmable Timer			
	S6840	AMI	
	S68A40	AMI	
	S68B40	AMI	
	F6840	**Fairchild**	**(1462)**
	F68A40	Fairchild	
	F68B40	Fairchild	
	HD6840	Hitachi	
	HD68A40	Hitachi	
	HD68B40	Hitachi	
	MC6840	**Motorola**	**(1505)**
	MC6840M	**† Motorola**	**(1505)**
	MC68A40	Motorola	
	MC68B40	Motorola	
	SY68C40	Synertek	
	EF6840	Thomson-CSF	
	EF68A40	Thomson-CSF	
	EF68B40	Thomson-CSF	
RAM(128x8), See 6810, 68A10, and 68B10 series in PART NUMBER INDEX and also MEMORY-RAMs Static			
ROM, I/O, Timer			
	S6846	AMI	
	F6846	**Fairchild**	**(1463)**
	MC6846	**Motorola**	**(1505)**
	MC6846M	**† Motorola**	**(1505)**
	MC68A46	Motorola	
	MC68B46	Motorola	
	TMS7040	TI	
	TMS70C40	TI	
ROM, Multiplexed Bus			
	MCM65516	**Motorola**	**(4048)**
ROM (2048x8), See 6831, 68A316, 68B316 and 6832 series in PART NUMBER INDEX and also MEMORY-ROMs			
ROM(1024x8), See 6830, 68A30, 68B30, 68A308, and 68B308 series in PART NUMBER INDEX and also MEMORY-ROMs			
ROM(4096x8), See 68A332 listing in PART NUMBER INDEX and also MEMORY-ROMs.			
Synchronous Address Multiplexer			
	MC6883	Motorola	
	SN74LS783	Motorola	
Synchronous Receiver/Transmitter (USRT, See also Interface-Serial Transmitters-Receivers)			
	S2350	AMI	
Synchronous Serial Data Adapter (SSDA)			
	S6852	AMI	
	S68A52	AMI	
	S68B52	AMI	
	F6852	**Fairchild**	**(1464)**
	F68A52	Fairchild	
	F68B52	Fairchild	
			(Continued)

Function	Device	Source	
Synchronous Serial Data Adapter (SSDA) (Cont'd)			
	HD6852	Hitachi	
	HD68A52	Hitachi	
	MC6852	**Motorola**	**(1505)**
	MC6852M	**† Motorola**	**(1505)**
	MC68A52	Motorola	
	MC68B52	Motorola	
	EF6852	Thomson-CSF	
	EF68A52	Thomson-CSF	
	EF68B52	Thomson-CSF	
Timer/Counter, Dual			
	CDP6848C	**RCA**	**(1595)**
Video Display Generator			
	MC6847	**Motorola**	**(1505)**
	MC68478	Motorola	
Triple Bidirectional Bus Switch (also MC3449)			
	MC6881	Motorola	
Triple Timer	MD68SC40	Mitel	
Hex Buffers/Inverters (See also Digital-TTL-Buffers/Inverters 8T95, 8T96, 8T97, 8T98)			
	MC6885	Motorola	
	MC6886	Motorola	
	MC6887	Motorola	
	MC6888	Motorola	
Octal Buffer/Latch, Three-State			
	MC3482A	**Motorola**	**(3063)**
	MC3482B	**Motorola**	**(3063)**
	MC6882A	**Motorola**	**(3063)**
	MC6882B	**Motorola**	**(3063)**
7000			
Microcomputer (CMOS), RAM, I/O (microlanguage processor)	**TMS70C00**	**TI**	**(1704)**
Microcomputer (CMOS), RAM, ROM, I/O (microlanguage processor)	**TMS70C20**	**TI**	**(1704)**
Microcomputer, RAM, EPROM, I/O			
	TMS70E40	TI	
Microcomputer, RAM, E²PROM			
	72710	**SEEQ**	**(1597)**
	72720	SEEQ	
Microcomputer, RAM, I/O (microlanguage processor)			
	TMS7000	**TI**	**(1704)**
Microcomputer, RAM, ROM, I/O (microlanguage processor)			
	TMS7020	**TI**	**(1704)**
	TMS7040	**TI**	**(1704)**
	TMS70C40	**TI**	**(1704)**
	TMS70L22	TI	
Microcomputer, RAM, ROM, Serial I/O			
	TMS7041	**TI**	**(1704)**
8008			
Programmable Communication Interface (See listing under 8080)	8251	Intel	
8048			
Microcomputer, CMOS (mask programmed ROM)			
	μPD80C48	**NEC**	**(1571)**
	TMP80C48	Toshiba	
Microcomputer (erasable PROM)			
	AM8748	AMD	
	8748-8	Intel	
	8748H	Intel	
	8749H	Intel	
	8749H-8	Intel	
	M8748	† Intel	
			(Continued)

† Military Temperature Range (−55° to 125°C)

* Typical Value

Bold face indicates additional data is provided on the page noted.

MICROPROCESSOR–System Components (Cont'd)

8 Bit

8048 (Cont'd)

Function	Device	Source	Line
Microcomputer (erasable PROM) (Cont'd)			
	M5L8748	Mitsubishi	
	μPD8748	NEC	
Microcomputer (external ROM)			
	AM8035	AMD	
	AM8039	AMD	
	8035AHL	Intel	5
	8039AHL	Intel	
	8039HL	Intel	
	8040AHL	Intel	
	80A35	Intel	
	80A39	Intel	10
	80C35	Intel	
	80C39	Intel	
	M8035L	† Intel	
	M5L8039	Mitsubishi	
	INS8035	National	15
	INS8035L	National	
	INS8039	National	
	INS8039L	National	
	INS8040	National	
	INS8040L	National	20
	μPD8035L	NEC	
	μPD8039L	NEC	
	μPD80C35	**NEC**	**(1571)**
	MSM80C35	**OKI**	**(4118)**
	MSM80C39	**OKI**	**(4118)** 25
	SCC80C35	**Signetics**	**(1686)**
	SCC80C39	**Signetics**	**(1686)**
	SCC80C40	**Signetics**	**(1686)**
	SCN8035A	**Signetics**	**(1685)**
	SCN8039A	**Signetics**	**(1685)** 30
	SCN8040	**Signetics**	**(1685)**
	TMP8035	Toshiba	
	TMP8039	Toshiba	
	TMP8039-6	Toshiba	
	TMP80C35	Toshiba	35
	TMP80C39P-6	Toshiba	
Microcomputer (mask programmed ROM)			
	AM8048	AMD	
	AM8049	AMD	
	8048	Intel	
	8048AH	Intel	40
	8048H	Intel	
	8049AH	Intel	
	8049H	Intel	
	8049HL	Intel	
	8050AH	Intel	45
	80A48L	Intel	
	80A49	Intel	
	80C48	Intel	
	80C49	Intel	
	M8048H	† Intel	50
	M8049H	Intel	
	M5L8048	Mitsubishi	
	M5L8049	Mitsubishi	
	M5L80C49	Mitsubishi	
	INS8048	National	55
	INS8048L	National	
	INS8049	National	
	INS8049L	National	
	INS8050	National	
	INS8050L	National	60
	μPD8048	NEC	
	μPD8049	NEC	
	MSM80C48	**OKI**	**(4118)**
	MSM80C49	**OKI**	**(4118)**
	SCC80C48	**Signetics**	**(1686)** 65
	SCC80C49	**Signetics**	**(1686)**
	SCC80C50	**Signetics**	**(1686)**
			(Continued)

Function	Device	Source	Line
Microcomputer (mask programmed ROM) (Cont'd)			
	SCN8048A	**Signetics**	**(1685)**
	SCN8049A	**Signetics**	**(1685)**
	SCN80503	Signetics	70
	TMP8048	Toshiba	
	TMP8049	Toshiba	
	TMP80C49P-6	Toshiba	
Microcomputer, Piggyback EPROM			
	NS87P50	**National**	**(1524)**
Microcomputer, RAM, ROM, Tiny BASIC, Microinterpreter			
	INS8073	National	75
Microcomputer, ROM, RAM, I/O			
	AM8021	AMD	
	8020H	Intel	
	8021H	Intel	
Microcomputer (ROM, RAM, I/O, on-board A/D)			
	8022	Intel	
	TMP8022	Toshiba	80
Analog Input, Multiplexer, A/D Converter			
	MP21	Burr-Brown	
	MP22	Burr-Brown	
	MP32	Burr-Brown	
Bidirectional Bus Driver. See 8216, 8226, etc. under 8080			
	8216	Intel	
	8226	Intel	85
	μPB8216	NEC	
	μPB8226	NEC	
Bidirectional Bus Driver. See 8216, 8266, etc. under 8080.			
	MB425	Fujitsu	
	MB426	Fujitsu	
CRT Controller. See 8275, etc. under 8080.			
	8275	Intel	90
	μPD3301	NEC	
	SCN2672	**Signetics**	**(1680)**
Decoder, 1 of 8. See 8205, etc. under 8080.			
	8205	Intel	
Floppy Disc Controller. See 8271, etc. under 8080.			
	8271	Intel	
	8271-6	Intel	95
	μPD765	**NEC**	**(1549)**
	FD1793-02	Western	
	FD1797-02	Western	
GPIB Talker/Listener			
	8291	Intel	
I/O Expander for 8048 Family			
	MBL8243	Fujitsu	100
	MBL82C43	Fujitsu	
	8243	Intel	
	M8243	† Intel	
	INS8243	National	
	μPD8243	NEC	105
	TMP82C43	Toshiba	
Keyboard/Display Controller, See 8279, etc. under 8080.			
Multi-Universal Asynchronous Receiver Transmitter			
	SAB8256A	Siemens	
Priority Interrupt Control. See 8214, etc. under 8080.			
	8214	Intel	110
	μPB8214	NEC	
Programmable Communication Interface (USART) See 8251, etc. under 8080.			
	AM8251A	**AMD**	**(1436)**
	8251A	Intel	
	μPD8251	NEC	
	TMP8251A	Toshiba	115
Programmable Interrupt Controller. See 8259, etc. under 8080.			
	8259	Intel	
	8259-5	Intel	
	8259A	Intel	
			(Continued)

Function	Device	Source	Line
Programmable Interrupt Controller. See 8259, etc. under 8080. (Cont'd)			
	8259A-2	Intel	
	8259A-8	Intel	120
	μPD8259	NEC	
	μPD8259-5	NEC	
	TMP8259A	Toshiba	
Programmable Interval Timer. See 8253, etc. under 8080.			
	AM8253	**AMD**	**(1436)**
	8253	Intel	125
	μPD8253	NEC	
	μPD8253-5	NEC	
Programmable Peripheral Interface. See 8255, etc. under 8080.			
	AM8255A	**AMD**	**(1437)**
	AM8255A-5	**AMD**	**(1437)**
	8255A	Intel	130
	μPD8255	NEC	
	μPD8255A-5	NEC	
PROM (erasable), I/O			
	8755A	Intel	
	μPD8755A	NEC	
	TMP8755A	Toshiba	135
RAM, I/O, Timer			
	AM8155	AMD	
	AM8155-2	AMD	
	AM8156	AMD	
	AM8156-2	AMD	
	8155	Intel	140
	8155-2	Intel	
	8155H	Intel	
	8155H-2	Intel	
	8156	Intel	
	8156-2	Intel	145
	8156H	Intel	
	8156H-2	Intel	
	M8155H	† Intel	
	μPD8155	NEC	
	μPD8156	NEC	150
	TMP8155	Toshiba	
	TMP8156	Toshiba	
ROM, I/O	8355	Intel	
	8355-2	Intel	
	μPD8355	NEC	155
SDLC/HDLC Protocol Controller. See 8273, etc. under 8080.			
	8273	Intel	
	μPD379	NEC	
Universal Peripheral Interface (slave microprocessor)			
	8041AH	Intel	
	8041AH-2	Intel	
	8042	Intel	160
	8641A	Intel	
	8741A	Intel	
	8742	Intel	
	M8741A	† Intel	
	M5L8041A	Mitsubishi	165
	μPD8041	NEC	
	μPD8041A	NEC	
	μPD8741A	Signetics	
Video System Controller			
	AM9152	AMD	
Octal Bus Transceiver			
	M8286	† Intel	170
	M8287	† Intel	

8051

Function	Device	Source	Line
Microcomputer and HDLC/SDLC Serial Interface			
	8044	Intel	
	8744	Intel	
Microcomputer (erasable PROM)			
	8751	Intel	
	M8751H	† Intel	175

† Military Temperature Range (−55° to 125°C)

* Typical Value

Bold face indicates additional data is provided on the page noted.

© IC MASTER 1984

MICROPROCESSOR–System Components (Cont'd)

8 Bit

8051 (Cont'd)

Function	Device	Source	Line
Microcomputer (external ROM)			
	AM8031	AMD	
	8031AH	Intel	
	80C31	Intel	
	80C31	Intersil	
	8031	Siemens	5
	SCC80C31	**Signetics (1688)**	
	SCN8031	**Signetics (1685,1687)**	
	TMP8031	Toshiba	
Microcomputer (mask programmed ROM)			
	AM8051	AMD	
	8051AH	Intel	10
	8052	Intel	
	80C51	Intel	
	M80C51	† Intel	
	8051	Intersil	
	80C51	Intersil	15
	8051	Siemens	
	SCC80C51	**Signetics (1688)**	
	SCN8051	**Signetics (1685,1687)**	
	TMP8051	Toshiba	

8080

Function	Device	Source	Line
See also Z80.			20
Microprocessor			
	AM8080A	AMD	
	AM8080A-1	AMD	
	AM8080A-2	AMD	
	AM8080A-4	AMD	
	AM9080AC	AMD	25
	AM9080AM	† AMD	
	8080A	Intel	
	8080A-1	Intel	
	8080A-2	Intel	
	M8080A	† Intel	30
	iAPX 88/10	Intel	
	iAPX 88/20	Intel	
	INS8080A	National	
	INS8080A-1	National	
	INS8080A-2	National	35
	μPD8080A	NEC	
	μPD8080A-1	NEC	
	μPD8080A-2	NEC	
Analog Input, MUX, A/D Converter			
	MP20	Burr-Brown	
	MP22	Burr-Brown	40
	MP32	Burr-Brown	
	ADC0816C	National	
	μPD7001	NEC	
	μPD7002	NEC	
Analog Input, 3 3/4 Digit DVM with Multiplexed Output			
	INS8294	National	45
Arithmetic Processing Unit			
	AM9511A-1	**AMD (1440)**	
	AM9511ADM	**† AMD (1440)**	
	8231A	Intel	
	M8231A	† Intel	
Asynchronous Communication Element			
	DP8250	National	50
	INS8250	National	
	TR1983	Western	
Bidirectional Bus Driver (See also Digital-Miscellaneous-Bus Drivers, Interface-Line Transceivers.)			
	AM3216	AMD	
	AM3226	AMD	
	AM8216	AMD	55
	AM8226	AMD	
		(Continued)	

Function	Device	Source	Line
Bidirectional Bus Driver (See also Digital-Miscellaneous-Bus Drivers, Interface-Line Transceivers.) (Cont'd)			
	M3216	† AMD	
	M3226	† AMD	
	M8216	† AMD	
	M8226	† AMD	60
	8216	Intel	
	8226	Intel	
	M8216	† Intel	
	M8226	† Intel	
	M5L8216	Mitsubishi	65
	DP3216	National	
	DP3226	National	
	DP7304	† National	
	DP8216	National	
	DP8216M	† National	70
	DP8226	National	
	DP8226M	† National	
	DP8304	National	
	DS8833	National	
	DS8835	National	75
	INS8208	National	
	INS8216	National	
	INS8226	National	
	μPB8216	NEC	
	μPB8226	NEC	80
Bus Controller	8218	Intel	
Bus Driver (See also Digital-Misc., Bus Drivers			
	INS8202	National	
	INS8203	National	
Cassette Controller			
	μPD371	NEC	
Clock Generator and Driver			
	AM8224C	AMD	85
	AM8224M	† AMD	
	8224	Intel	
	M8224	† Intel	
	DP8224	National	
	INS8224	National	90
	μPB8224	NEC	
	SN54ALS474	† TI	
	SN54LS424	† TI	
	SN74LS424	TI	
CRT Controller	8275	Intel	95
	8276	Intel	
	DP8350	**National (1514)**	
	DP8352	National	
	DP8353	National	
	μPD3301	NEC	100
Data Acquisition System, 8 Channel, 8-Bit Conversion			
	AD7581A	AD	
	AD7581B	AD	
	AD7581C	AD	
	AD7581J	AD	
	AD7581K	AD	105
	AD7581L	AD	
Data Ciphering Processor			
	AM9518	**AMD (1433,1444)**	
Data-Encryption Device (encrypts and decrypts data according to NBS standard)			
	8294	Intel	
Decoder, 1 of 8 (See also Digital-TTL-Decoders, 3222, 74LS138, etc.)			
	AM25LS138C	AMD	
	AM25LS138M	† AMD	110
	8205	Intel	
	DM74LS138	National	
	INS82LS05	National	
	SN74LS138	**TI (968)**	

Function	Device	Source	Line
Display Controller			
	INS8247	National	115
	INS8248	National	
Dynamic RAM Controller			
	8202A	Intel	
	8203	Intel	
Erasable PROMs. See Memory-PROMs and 8708 listing in PART NUMBER INDEX			
Erasable PROMs, See Memory-PROMs and 8708 listing in PART NUMBER INDEX			120
Error Detection & Correction Chip			
	8206	Intel	
Floating Point Processor			
	8232	Intel	
Floppy Disc Controller			
	8271	Intel	
	μPD765	NEC	
	FD1793-02	Western	125
	FD1797-02	Western	
GPIB Controller	8292	Intel	
GPIB Talker/Listener Interface			
	8291A	Intel	
GPIB Transceiver			
	8293	Intel	
GPIB Universal Interface			
	μPD7201	**NEC (1531)**	130
I/O Expander for 8041/8741, CMOS			
	MBL8243E	Fujitsu	
	MBL8243N	Fujitsu	
	IM82C43I	**Intersil (1500)**	
	IM82C43M	**† Intersil (1500)**	
I/O Expander for 8041A/8741A			
	8243	Intel	135
	TMP8243P	Toshiba	
I/O Latch (see also Digital-CMOS and TTL, Latches)			
	INS82C06	National	
I/O Port	AM3212	AMD	
	AM8212C	AMD	
	AM8212M	† AMD	140
	M3212	† AMD	
	8212	Intel	
	M8212	† Intel	
	M5L8212	Mitsubishi	
	DP8212	National	145
	DP8212M	† National	
	INS8212	National	
	μPB8212	NEC	
	SN54S412	**† TI (1033)**	
	SN74S412	**TI (1033)**	150
Keyboard Display Controller			
	AM8279	**AMD (1439)**	
	AM8279-5	**AMD (1439)**	
	AM8279-8	**AMD (1439)**	
	8279	Intel	
	8279-5	Intel	155
	M5L8279	Mitsubishi	
	M5L8279-5	Mitsubishi	
	μPD8279-5	NEC	
Keyboard Encoder (See also Interface-Keyboard Encoders)			
	INS8244	National	
	INS8245	National	160
	INS8246	National	
Multi-Protocol Communications Circuit			
	SCN2652A	Signetics	
Multi-Protocol Communications Controller (SDLC, ADDCP, BiSync, DDCMP)			
	SCN2652A	Signetics	

† Military Temperature Range (−55° to 125°C)

* Typical Value

Bold face indicates additional data is provided on the page noted.

MICROPROCESSOR–System Components (Cont'd)

8 Bit

8080 (Cont'd)

Function	Device	Source	Line
Multi-Universal Asynchronous Receiver Transmitter			
	8256	Intel	
	μPB8228	NEC	
	SN74S428	**TI**	**(1034)**
	SN74S438	**TI**	**(1034)**
	TIM8228	TI	5
	TIM8238	TI	
Polynominal Generator/Checker			
	SCN2653A	Signetics	
Programmable Communication Interface (USART) (See also Interface-Transmitters, Receivers)			
	AM8251	**AMD**	**(1436)**
	AM9551	**AMD**	**(1436)**
	8251A	Intel	10
	M8251A	† Intel	
	INS2651	National	
	INS8251	National	
	μPD8251	NEC	
	μPD8251A	NEC	15
	SCN2651C	Signetics	
	SCN2661A	Signetics	
	SCN2661B	Signetics	
	SCN2661C	Signetics	
	COM2651	SMC	20
	COM8251A	SMC	
	TMS5501	TI	
Programmable Counter			
	8254	Intel	
Programmable Direct Memory Access Controller			
	AM8257	**AMD**	**(1438)**
	AM9517A-5	**AMD**	**(1438,1443)** 25
	AM9557	**AMD**	**(1438)**
	8257	Intel	
	8257-5	Intel	
	M8257	† Intel	
	μPD8257	NEC	30
	μPD8257-5	NEC	
Programmable Interrupt Controller			
	8259A	Intel	
	8259A-2	Intel	
	8259A-8	Intel	
	INS8259	National	35
	μPD8259	NEC	
	μPD8259-5	NEC	
Programmable Interval Timer			
	AM8253	AMD	
	8253	Intel	
	INS8253	National	40
	INS8253-5	National	
	μPD8253	NEC	
	μPD8253-5	NEC	
Programmable Peripheral Interface			
	AM8255A	AMD	
	AM8255A-5	AMD	45
	AM9555ADM	AMD	
	8255A	Intel	
	M8255A	† Intel	
	INS8254	National	
	INS8255	National	50
	μPD8255	NEC	
	μPD8255A-5	NEC	
	MSM8255A	OKI	
RAM: See Memory—Static or Dynamic RAMS			55
RAM(128x8), ROM(2048x8), I/O			
	DP8356	National	
RAM(128x8) with 16-Bit I/O			
	INS8154	National	
RAM(1024x1): See 8102 listings in PART NUMBER INDEX and MEMORY-RAMs, Static			
RAM(256x4), See 8101 and 8111 listings in PART NUMBER INDEX and also MEMORY-RAMs, Static			
ROMs: See MEMORY-ROMs			60
SDLC/HDLC Protocol Controller			
	8273	Intel	
	μPD379	NEC	
	WD1933	Western	
See also Z80.			
Serial Data Communications Controller			65
	8274	Intel	
Synchronous Receiver/Transmitter (BiSync, SDLC)			
	μPD379	NEC	
System Controller and Bus Driver			
	AM8228C	AMD	
	AM8228M	† AMD	
	AM8238C	AMD	70
	AM8238M	† AMD	
	8228	Intel	
	8238	Intel	
	M8228	† Intel	
	M5L8228	Mitsubishi	75
	DP8228	National	
	DP8228M	† National	
	DP8238	National	
	DP8238M	† National	
	INS8228	National	80
	INS8238	National	
Universal Peripheral Interface (slave microprocessor)			
	8041AH	Intel	
	8041AH-2	Intel	
	8641A	Intel	
	8741A	Intel	85
	μPD8041	NEC	
	μPD8741A	NEC	
Octal Bus Transceiver			
	M8286	† Intel	
	M8287	† Intel	90

8085A

Function	Device	Source	Line
Many devices for the 8080 are also suitable for the 8085			
Microprocessor			
	AM8085A	**AMD**	**(1435)**
	AM8085A-2	**AMD**	**(1435)**
	AM9085A	AMD	
	8085AH	Intel	95
	8085AH-2	Intel	
	M8085A	† Intel	
	M8085AH	† Intel	
	M5L8085A	Mitsubishi	
	μPD8085A	NEC	100
	μPD8085A-2	NEC	
	TMP8085A	Toshiba	
Analog Input, Multiplexer, A/D Converter			
	MP21	Burr-Brown	
Bidirectional Bus Dirver. See 8216, 8226, etc. under 8080.			
	8216	Intel	
	8226	Intel	105
Bidirectional Bus Driver. See 8216, 8226, etc. under 8080.			
	μPB8216	NEC	
	μPB8226	NEC	
Bus Controller	8219	Intel	
Cassette Controller			
	μPD371	NEC	
CRT Controller. See 8275, etc. under 8080.			
	8275	Intel	110
	μPD3301	NEC	
Data Acquisition System, 8 Channel, 8-Bit Conversion			
	AD7581A	AD	
	AD7581B	AD	
	AD7581C	AD	
	AD7581J	AD	115
	AD7581K	AD	
	AD7581L	AD	
Decoder, 1 of 8. See 8205, etc. under 8080.			
	8205	Intel	
Dynamic RAM Controller			
	8202A	Intel	
	8203	Intel	120
Erasable PROM, I/O			
	8755A	Intel	
	M8755A	† Intel	
	μPD8755A	NEC	
	MSM8755	OKI	
Floppy Disc Controller. See 8271, etc. under 8080.			
	8271	Intel	125
	μPD765	NEC	
	FD1793-02	Western	
	FD1797-02	Western	
GPIB Controller	8292	Intel	130
GPIB Talker/Listener Interface			
	8291A	Intel	
I/O Expander	8243	Intel	
	M5L8243	Mitsubishi	
	μPD8243	NEC	
I/O Port. See 8212, etc. under 8080.			135
Keyboard Display Controller—See listing under 8080			
Multi-Universal Asynchronous Receiver Transmitter			
	SAB8256A	Siemens	
Priority Interrupt Control. See 8214, etc. under 8080.			140
Programmable Communication Interface (USART)			
	AM8251	AMD	
	8251A	Intel	
	M5L8251A	Mitsubishi	
	μPD8251	NEC	145
Programmable Direct Memory Access Controller			
	AM8237A	AMD	
	82C37A	Harris	
	8237A	Intel	
	8237A-4	Intel	
	8237A-5	Intel	150
	M8257	† Intel	
	M5L8257-5	Mitsubishi	
Programmable Direct Memory Access Controller.			
	AM8257	AMD	
	AM9557	AMD	
	8257	Intel	155
	8257-5	Intel	
	μPD8257	NEC	
	μPD8257-5	NEC	
Programmable Interrupt Controller			
	80C55A	† Harris	
	8259A	Intel	160
	8259A-2	Intel	
	8259A-8	Intel	
	M8259A	† Intel	
	M5L8259A	Mitsubishi	
	μPD8259	NEC	165
	μPD8259-5	NEC	

† Military Temperature Range (−55° to 125°C)

* Typical Value

Bold face indicates additional data is provided on the page noted.

© IC MASTER 1984

MICROPROCESSOR–System Components (Cont'd)

8 Bit

8085A (Cont'd)

Function	Device	Source	Line
Programmable Interval Timer			
	M8253	† Intel	
	M5L8253-5	Mitsubishi	
Programmable Interval Timer.			
	AM8253-5	**AMD**	**(1436)**
	8253-5	Intel	
	INS8253-5	National	5
	μPD8253	NEC	
	μPD8253-5	NEC	
Programmable Peripheral Interface			
	M5L8255A-5	Mitsubishi	
Programmable Peripheral Interface.			
	AM8255A-5	AMD	
	8255A-5	Intel	10
	μPD8255A-5	NEC	
	TMP8255A-5	Toshiba	
PROM (erasable), I/O			
	8755A	Intel	
	μPD8755A	NEC	
RAM, I/O, Timer			
	AM8155	AMD	15
	AM8155-2	AMD	
	AM8156	AMD	
	AM8156-2	AMD	
	8155	Intel	
	8155-2	Intel	20
	8156	Intel	
	8156-2	Intel	
	M8155	† Intel	
	M5L8155	Mitsubishi	
	M5L8156	Mitsubishi	25
	μPD8155	NEC	
	μPD8156	NEC	
	MSM8155	OKI	
RAM (1024x8) (See also: Memory-RAMs)			
	8185	Intel	
	8185-2	Intel	30
	M8185	† Intel	
ROM, I/O	8355	Intel	
	8355-2	Intel	
	μPD8355	NEC	
	TMP8355	Toshiba	35
ROM(2048x8) and I/O			
	μPD8355	NEC	
SDLC/HDLC Protocol Controller. See 8273, etc. under 8080.			
	8273	Intel	
	μPD7201	NEC	
Universal Peripheral Interface (slave microprocessor)			
	AM8041A	AMD	
	8041A	Intel	40
	8741A	Intel	
	μPD8041	NEC	
	μPD8741A	NEC	
Octal Bus Transceiver			
	M8286	† Intel	
	M8287	† Intel	45

9008

Function	Device	Source	Line
Microprocessor			
	CP9008	Western	
	WD9000	Western	

8X300

Function	Device	Source	Line
Microprocessor			
	N8X300	**Signetics (1608,1652)**	
	N8X305	**Signetics (1610,1652)**	50
	S8X300-1	**† Signetics (1608,1652)**	
	S8X300-2	**† Signetics (1608,1652)**	
	S8X305	**† Signetics (527,1610,1652)**	
Bus Expander, Addressable			
	N8T39	Signetics	
FIFO RAM Controller			
	N8X60	**Signetics (1647)**	55
	S8X60	**† Signetics (527,1647)**	
Floppy Disk Controller			
	N8X330	**Signetics (1623,1652)**	
I/O Port, Asynchronous, Field Programmable Address			
	N8T35	Signetics	
	N8T36	Signetics	
	N8X36	Signetics	60
	N8X376	**Signetics (1635,1652)**	
	S8T35	† Signetics	
	S8T36	† Signetics	
	S8X376	**† Signetics (527,1635,1652)**	
I/O Port, Latched Bidirectional			
	N8T31	Signetics	65
	N8X31	Signetics	
	N8X371	**Signetics (1632,1652)**	
	S8X371	**† Signetics (527,1632,1652)**	
I/O Port, Synchronous, Field Programmable Address			
	N8T32	Signetics	
	N8T33	Signetics	70
	N8X32	Signetics	
	N8X372	**Signetics (1635,1652)**	
	N8X382	**Signetics (1642,1652)**	
	N8X42	Signetics	
	S8T32	† Signetics	75
	S8T33	† Signetics	
	S8X372	**† Signetics (527,1635,1652)**	
	S8X382	**† Signetics (527,1642,1652)**	
I/O Port with Parity			
	N8X374	**Signetics (1638,1652)**	
	S8X374	**† Signetics (527,1638,1652)**	80
I/O Register Array (16x8 or 8x16)			
	N8X320	**Signetics (1619,1652)**	
Interrupt Controller			
	N8X310	**Signetics (1615,1652)**	
	S8X310	**† Signetics (527,1615,1652)**	
LIFO Stack Memory (32x8)			
	N8X355	**Signetics (1630)**	
	S8X355	**† Signetics (1630)**	85

Function	Device	Source	Line
Memory Address Director			
	N8X360	**Signetics (1631,1652)**	
	S8X360	**† Signetics (527,1631,1652)**	
RAM, Static (32x8)			
	N8X353	**Signetics (1629)**	
	S8X353	**† Signetics (1629)**	
RAM, Static (256x8)			
	N8X350	**Signetics (1627,1652)**	90
	S8X350	**† Signetics (527,532,1627,1652)**	
Transparent Bus Expander			
	N8T58	Signetics	

F8

Function	Device	Source	Line
Microprocessor			
	F3850	Fairchild	
	F3850M	† Fairchild	
	F8	**Fairchild (1454,1457)**	95
	MK3850	Mostek	
Analog Input, MUX, A/D Converter			
	MP21	**Burr-Brown (2849)**	
Direct Memory Access			
	3854	Fairchild	
	MK3854	Mostek	
Dynamic Memory Interface			
	F3852	Fairchild	100
	MK3852	Mostek	
Peripheral Input/Output Interface			
	3861	Fairchild	
	3861M	† Fairchild	
	3871	Fairchild	
	MK3861	Mostek	105
	MK3871	Mostek	
Program Storage Unit			
	3851	Fairchild	
	3851A	Fairchild	
	3851M	† Fairchild	
	3856	Fairchild	110
	3856A	Fairchild	
	3857	Fairchild	
	38T56	Fairchild	
	38T57	Fairchild	
	MK3851	Mostek	115
Static Memory Interface			
	3853	Fairchild	
	3853M	† Fairchild	
	MK3853	Mostek	

INS8060

Function	Device	Source	Line
Microprocessor			
	INS8060	National	
Analog Input, Multiplexer, A/D Converter			
	MP20	**Burr-Brown (2849)**	120
	MP22	**Burr-Brown (2849)**	
	MP32	**Burr-Brown (2849)**	
Bit Programmable I/O			
	INS8254	National	
Programmable Communication Interface (See also Interface Transmitters-Receivers)			
	INS8250	**National (1514)**	
	INS8251	National	125

† Military Temperature Range (−55° to 125°C)

* Typical Value

Bold face indicates additional data is provided on the page noted.

MICROPROCESSOR–System Components (Cont'd)

8 Bit

INS8060 (Cont'd)

Function	Device	Source	
Programmable Peripheral Interface	INS8255	National	
RAM(128x8) and I/O	INS8154	National	
4-Bit Latch	DM74LS175	National	
8-Bit I/O Port	DP8212	National	
	INS8212	National	

NSC800

Function	Device	Source	
Microprocessor (CMOS)	**NSC800-1**	**National**	**(1516)**
	NSC800-4	**National**	**(1516)**
Microprocessor	**NSC800**	**National**	**(1516)**
Bidirectional Transceiver	MM82PC08	National	
Bidirectional Transceiver (CMOS)	MM82PC08	National	
I/O, 3 Programmable Ports	NSC831	National	
Intelligent I/O, 3 Programmable Ports (CMOS)	NSC831-1	National	
	NSC831-4	National	
RAM, I/O, Timer	NSC810	National	
RAM, I/O, Timer (CMOS)	NSC810-1	National	
	NSC810-4	National	
ROM, I/O	NSC830	National	
ROM, I/O (CMOS)	NSC830-1	National	
	NSC830-4	National	
UART	NSC858	National	
8-Bit I/O Port	MM82PC12	National	

Z8

Function	Device	Source	
Microcomputer, RAM, EPROM	**71840**	**SEEQ**	**(1603)**
Microcomputer	Z8601	Synertek	
	Z8601A	Synertek	
	Z8602	Synertek	
	Z8602A	Synertek	
	Z8603	Synertek	
	Z8603A	Synertek	
	Z8611	Synertek	
	Z8611A	Synertek	
	Z8681	Synertek	
	Z8682	Synertek	
	Z86C01	Synertek	
	Z86C61	Synertek	
	Z8SMCU	Synertek	
	Z8601	**Zilog**	**(1753)**
	Z8601L	**Zilog**	**(1753,1753)**
	Z8602	Zilog	
	Z8603	**Zilog**	**(1753)**
	Z8611	**Zilog**	**(1754)**
	Z8612	**Zilog**	**(1754)**
	Z8613	**Zilog**	**(1754)**
	Z8671	**Zilog**	**(1754)**
	Z8675	Zilog	
	Z8681	**Zilog**	**(1755)**
	Z8682	Zilog	

Z80

Note: the 6500, 6800 and 8080 peripheral circuits are compatible with the Z80 series.

Function	Device	Source	
Microprocessor	MK3880	Mostek	
	μPD780	NEC	
	μPD780-1	NEC	
	Z80-CPU	SGS	
	Z80A-CPU	SGS	
	LH0080	Sharp	
	Z80	**Zilog**	**(1738)**
	Z80A	**Zilog**	**(1738)**
	Z80B	**Zilog**	**(1738)**
	Z80L	**Zilog**	**(1738)**
	Z8400H	**Zilog**	**(1738)**
	Z8400L	**Zilog**	**(1738)**
Analog Input, Multiplexer, A/D Converter	MP20	Burr-Brown	
	MP22	Burr-Brown	
	MP32	Burr-Brown	
Clock Generator and Controller	**Z8581**	**Zilog**	**(1752)**
Counter Timer Circuit	MK3882	Mostek	
	Z80-CTC	SGS	
	Z80A-CTC	SGS	
	Z80-CTC	**Zilog**	**(1738)**
	Z80A-CTC	**Zilog**	**(1738)**
	Z80B-CTC	**Zilog**	**(1738)**
	Z8430	**Zilog**	**(1739)**
Data Acquisition System, 8 Channel, 8-Bit Conversion	**AD7581A**	**AD**	**(2838)**
	AD7581B	**AD**	**(2838)**
	AD7581C	**AD**	**(2838)**
	AD7581J	**AD**	**(2838)**
	AD7581K	**AD**	**(2838)**
	AD7581L	**AD**	**(2838)**
	AD8581B	AD	
Direct Memory Access Controller	MK3883	Mostek	
	Z80-DMA	SGS	
	Z80A-DMA	SGS	
	Z80-DMA	**Zilog**	**(1738)**
	Z80A-DMA	**Zilog**	**(1738)**
	Z8410	**Zilog**	**(1739)**
Parallel Input/Output Controller	MK3881	Mostek	
	Z80-PIO	SGS	
	Z80A-PIO	SGS	
	Z80-PIO	**Zilog**	**(1738)**
	Z80A-PIO	**Zilog**	**(1738)**
	Z80B-PIO	**Zilog**	**(1738)**
	Z8420	**Zilog**	**(1739)**
Serial Input/Output Controller	MK14007	Mostek	
	MK3884	Mostek	
	MK3885	Mostek	
	MK3887	Mostek	
	Z80-SIO	SGS	
	Z80A-SIO	SGS	
	Z80-SIO	**Zilog**	**(1738)**
	Z80-SIO/2	**Zilog**	**(1738)**
	Z80-SIO/9	**Zilog**	**(1738)**
	Z80A-SIO/1	**Zilog**	**(1738)**
	Z80A-SIO/2	**Zilog**	**(1738)**
	Z80A-SIO/9	**Zilog**	**(1738)**
	Z80B-SIO/9	**Zilog**	**(1738)**
	Z8440	**Zilog**	**(1740)**
	Z8441	Zilog	
	Z8442	Zilog	
	Z8449	Zilog	

Function	Device	Source	
Single Asynchronous Receiver/Transmitter	MK3886	Mostek	
Dual Asynchronous Receiver/Transmitter	Z80-DART	SGS	
	Z80A-DART	SGS	
	Z80-DART	**Zilog**	**(1738)**
	Z80A-DART	**Zilog**	**(1738)**
	Z8470	**Zilog**	**(1740)**

Z800

Note: Z80 peripheral circuits and Z8500 universal peripheral circuits are compatible with the Z800 series.

Function	Device	Source	
Microprocessor	Z8108	Zilog	
Arithmetic Processing Unit	**Z8070-Z-APU**	**Zilog**	**(1750)**
Family of 8 and 16-Bit Microprocessors	**Z800**	**Zilog**	**(1748)**

μPD7810

Function	Device	Source	
Microcomputer with A/D Converter	**μPD7810**	**NEC**	**(1562)**
	μPD7811	**NEC**	**(1562)**
Microcomputer	**μPD7807**	**NEC**	**(1566)**
	μPD7809	**NEC**	**(1566)**
	μPD78P09	**NEC**	**(1566)**

8/16 Bit

1600

Function	Device	Source	
Microprocessor, 8-Bit	CP1651	Western	
	CP1661	Western	
Microprocessor, 16-Bit	MP1651	Western	
	MP1661	Western	
Asynchronous/Synchronous Transmitter/Receiver (ASTRO) (See also Interface-Serial Transmitters-Receivers)	COM1671	SMC	
	UC1671	Western	
	UC1971	Western	
Direct Memory Access Controller	DM1881	Western	
	DM1883	Western	
Floppy Disc Controller/Formatter	MB8866	Fujitsu	
	INS1771	National	
	FD1771-01	Western	
	FD1781	Western	
	FD1781-01	Western	
	FD1791-02	Western	
	FD1795-02	Western	
General Purpose Input/Output	CP1851	Western	

8086

Function	Device	Source	
Microprocessor, High Integration	**iAPX186**	**AMD**	**(1430)**
	iAPX186	Intel	
Microprocessor, Numeric Data	80287	Intel	
	iAPX186/20	Intel	
	iAPX86/20	Intel	

† Military Temperature Range (−55° to 125°C)

* Typical Value

Bold face indicates additional data is provided on the page noted.

© IC MASTER 1984

MICROPROCESSOR–System Components (Cont'd)

8/16 Bit

8086 (Cont'd)

Function	Device	Source	
Microprocessor, Operating System			
	80130	Intel	
	iAPX86/30	Intel	
Microprocessor, 16-Bit (CMOS)			
	80C86	**Harris**	**(1479,1486)**
Microprocessor, 16-Bit with Memory Management			
	iAPX286/10	Intel	
Microprocessor, 16-Bit			
	AM8086	**AMD**	**(1429,1432)**
	AM8086-1	**AMD**	**(1429,1432)**
	AM8086-2	**AMD**	**(1429,1432)**
	MBL8086	Fujitsu	
	MBL8086-1	Fujitsu	
	MBL8086-2	Fujitsu	
	80186	Intel	
	80286	Intel	
	8086	Intel	
	8086-1	Intel	
	8086-2	Intel	
	M8086	† Intel	
	iAPX86/10	Intel	
	M5L8086	Mitsubishi	
	μPD8086	NEC	
	SAB8086C	Siemens	
	SAB8086C-4C	Siemens	
Bus Controller	82288	Intel	
Clock and Ready Interface, for iAPX286			
	82284	Intel	
Occam Programming System			
	IMSP100	Inmos	
	IMSP200	Inmos	
	IMSP600	Inmos	
	Occam	**Inmos**	**(1913)**

8086/88

Many devices for the 8080 and 8085A are also suitable for the 8086 and 8088

Function	Device	Source	
Microprocessor, I/O Preprocessor			
	MBL8089	Fujitsu	
	8089	Intel	
Bus Arbiter	MBL8289	Fujitsu	
	82C89	**Harris**	**(1485,1487)**
	8289	Intel	
	M8289	† Intel	
	M5L8289	Mitsubishi	
	SAB8289	Siemens	
Bus Controller	MBL8288	Fujitsu	
	82C88	**Harris**	**(1485,1487)**
	8288	Intel	
	M8288	† Intel	
	M5L8288	Mitsubishi	
	μPD8288	NEC	
	SAB8288	Siemens	
Clock Generator and Driver			
	MBL8284A	Fujitsu	
	82C84B	Harris	
	8284A	Intel	
	8284A-1	Intel	
	M8284	† Intel	
	M5L8284A	Mitsubishi	
	μPD8284	NEC	
	SAB8248A	Siemens	
Clock Generator/Driver			
	82C84A	**Harris**	**(1484,1487)**
DMA Controller	**82C37A**	**Harris**	**(1484)**
Dynamic RAM Controller			
	8202A	Intel	
	8203	Intel	
GPIB Talker/Listener			
	8291A	Intel	
Many devices for the 8080 and 8085A are also suitable for the 8086 and 8088			
Multiprotocol Serial I/O Controller			
	μPD7201	NEC	
Multi-Universal Asynchronous Receiver Transmitter			
	8256	Intel	
	SAB8256A	Siemens	
Priority Interrupt Controller			
	82C59A	**Harris**	**(1483,1486)**
Programmable Interrupt Controller			
	MBL8259A	Fujitsu	
	8259A	Intel	
	μPD8259A	NEC	
	SAB8259A	Siemens	
	SAB8259A-2	Siemens	
	SAB8259A-8	Siemens	
Programmable Interval Timer			
	82C54	**Harris**	**(1482,1486)**
Programmable Peripheral Interface			
	82C55A	**Harris**	**(1482,1486)**
Serial Communications Interface			
	82C52	**Harris**	**(1482,1494)**
Text Coprocessor			
	82730	Intel	
Video Interface Controller			
	82731	Intel	
Octal Bus Transceiver, Inverting			
	MBL8287	Fujitsu	
	82C87	**Harris**	**(1485)**
	8287	Intel	
	M8287	† Intel	
	M5L8287	Mitsubishi	
	μPD8287	NEC	
	SAB8287	Siemens	
Octal Bus Transceiver, Non-Inverting			
	MBL8286	Fujitsu	
	82C86	**Harris**	**(1484)**
	8286	Intel	
	M8286	† Intel	
	M5L8286	Mitsubishi	
	μPD8286	NEC	
	SAB8286	Siemens	
Octal Latch, Inverting			
	MBL8283	Fujitsu	
	82C83	**Harris**	**(1484)**
	8283	Intel	
	M8283	† Intel	
	M5L8283	Mitsubishi	
	μPD8283	NEC	
	SAB8283	Siemens	
Octal Latch, Non-Inverting			
	MBL8282	Fujitsu	
	82C82	**Harris**	**(1484,1487)**
	8282	Intel	
	M8282	† Intel	
	M5L8282	Mitsubishi	
	μPD8282	NEC	
	SAB8282	Siemens	

8088

Function	Device	Source	
Microprocessor, Numeric Data			
	AM8087	**AMD**	**(1432)**
	80187	Intel	
	8087	Intel	
	iAPX188/20	Intel	
	iAPX88/20	Intel	
Microprocessor, Operating System			
	iAPX88/30	Intel	
Microprocessor, 8-Bit			
	AM8088	**AMD**	**(1429)**
	MBL8088	Fujitsu	
	MBL8088-2	Fujitsu	
	80C88	**Harris**	**(1480)**
	8088	Intel	
	8088-2	Intel	
	iAPX88/10	Intel	

9900

Function	Device	Source	
Microcomputer ROM-Less			
	TM9995	TI	
Microcomputer, 16 Bit (erasable PROM)			
	TMS9940E	TI	
Microcomputer, 16 Bit			
	TMS9940M	TI	
Microprocessor, 16-Bit			
	TMS99105A	**TI**	**(1702)**
	TMS99110A	**TI**	**(1702)**
Microprocessor			
	S9900	**AMI**	**(1453)**
	S9981	AMI	
	SMC9980	SMC	
	SBP9900AC	TI	
	SBP9900AE	TI	
	SBP9900AM	† TI	
	TMS9900	**TI**	**(1702)**
	TMS9900-40	**TI**	**(1702)**
	TMS9980A	TI	
	TMS9981	TI	
Addressable Latch, 8-Bit			
	SN54LS259	**† TI**	**(1005)**
	SN74LS259	**TI**	**(1005)**
	TIM9906	TI	
Asynchronous Communication Controller (UART) (See also Interface-Serial Transmitters-Receivers)			
	S9902	AMI	
	TMS9902A	**TI**	**(1712)**
Byte Multiplier	SBP9708C	TI	
	SBP9708M	† TI	
Clock Generator and Driver (4-phase for 9900)			
	SN54LS362	† TI	
	TIM9904	TI	
Color Graphics Video Display			
	TMS9918A	**TI**	**(1712)**
CRT Controller	TMS9927	TI	
	TMS9937	**TI**	**(1712)**
Data Encrypton Unit			
	TMS99541	**TI**	**(1712)**
Data Selector/Multiplexer (See also Digital-TTL-Multiplexers 74LS251)			
	SN54LS251	**† TI**	**(1003)**
	SN74LS251	**TI**	**(1003)**
	TIM9905	TI	
DMA Controller	TMS9911	TI	
Floppy Disc Controller			
	TMS9909	TI	
FSK Modem	**TMS99532**	**TI**	**(1712)**
GPIB Controller	**TMS9914A**	**TI**	**(1712)**

† Military Temperature Range (−55° to 125°C)

* Typical Value

Bold face indicates additional data is provided on the page noted.

MICROPROCESSOR–System Components (Cont'd)

8/16 Bit

9900 (Cont'd)

Function	Device	Source	
Interrupt Controller/Timer			
	SBP9961C	TI	
	SBP9961M	† TI	
Memories: See Memory: PROMs, RAMs (Dynamic or Static), and ROMs			
Multi-Processor Interface			
	TMS99650	**TI**	**(1712)**
Peripheral Interface Adapter			
	SBP9965C	**TI**	**(539)**
	SBP9965M	**† TI**	**(539)**
Priority Encoder (See also Digital-TTLMiscellaneous, Priority Encoder, 74LS148)			
	TIM9907	TI	
Priority Encoder, 8-Line to 3-Line			
	SN74LS148	**TI**	**(971)**
Priority Encoder, 8-Line to 3-Line, Three State			
	SN74LS348	**TI**	**(1019)**
	TIM9908	TI	
Programmable Communications Register (CRU), I/O Expander	SBP9960C	TI	
	SBP9960M	† TI	
Programmable Systems Interface (interrupt prioritization, I/O control and interval timing)			
	TMS9901	**TI**	**(1712)**
Pulse DTMF Encoder			
	TMS99531	**TI**	**(1712)**
Serial Fiber Optics Transmitter, with Expandable Octal Demultiplexer	SN74LS463	TI	
Synchronous Communication Controller (bi-sync and SDLC)	**TMS9903**	**TI**	**(1712)**
Systems Timer (for SBP9900A)			
	SBP9964C	TI	
	SBP9964M	† TI	
Video Display Processor			
	TMS9928A	TI	
	TMS9929A	TI	
Octal Fiber-Optics Serial Transmitter, Expandable			
	SN74LS462	TI	

16000

Function	Device	Source	
Microprocessor, 8-Bit and 16-Bit			
	F16000	**Fairchild**	**(1454,1470)**
	F16008	**Fairchild**	**(1470)**
Microprocessor, 8-bit and 16-Bit			
	F16016	**Fairchild**	**(1470)**
	NS16016	National	
Bus Arbiter	**F16204**	**Fairchild**	**(1470)**
	NS16204	**National**	**(1514)**
Channel Controller			
	F16203	**Fairchild**	**(1470)**
Floating-Point Slave Processor			
	F16081	**Fairchild**	**(1470)**
GPIB Controller	F16488	Fairchild	
Intelligent Peripheral Controller			
	F16105	**Fairchild**	**(1470)**
Interrupt Control Unit			
	F16202	**Fairchild**	**(1470)**
Local Area Network Controller			
	F16802	Fairchild	
Memory Management Unit			
	F16082	**Fairchild**	**(1470)**
Multiple Protocol Communications Controller			
	F16456	Fairchild	
Packet Switching Frame Level Controller			
	F16425	**Fairchild**	**(1470)**
	NS16425	**National**	**(1514)**
Timing Control Unit			
	F16201	**Fairchild**	**(1470)**

12 Bit

2900 Controller

Function	Device	Source	
Microprogram Controller, 12-Bit			
	AM2910C	**AMD**	**(1408)**
	AM2910M	**† AMD**	**(1408)**
	GP502AD	RCA	
Microprogram Sequencer, 8-Bit			
	AM29112	**AMD**	**(1423)**

6100

Function	Device	Source	
Microprocessor			
	HD6120-2	**† Harris**	**(1489)**
	HD6120-9	**† Harris**	**(1489)**
	HM6100-2	**† Harris**	**(1488)**
	HM6100C-9	**Harris**	**(1488)**
	IM6100-1I	Intersil	
	IM6100-1M	† Intersil	
	IM6100AI	Intersil	
	IM6100AM	† Intersil	
	IM6100I	Intersil	
Bidirectional Bus Driver			
	HD6432-2	**† Harris**	**(1490)**
	HD6432-9	**Harris**	**(1490)**
Bus Driver	**HD6431-2**	**† Harris**	**(1490)**
	HD6431-9	**Harris**	**(1490)**
Bus Driver, Hex			
	HD6435-2	† Harris	
	HD6435-9	Harris	
Bus Driver, Octal			
	HD6434-2	**† Harris**	**(1490)**
	HD6434-9	**Harris**	**(1490)**
Bus Separator/Driver (octal organized as 4 pairs of bus separators)	**HD6433-2**	**† Harris**	**(1490)**
	HD6433-9	**Harris**	**(1490)**
Input/Output Controller			
	HD6121-2	**† Harris**	**(1489)**
	HD6121-9	**Harris**	**(1489)**
Memory Extension, DMA, Interval Timer, Controller (MEDIC)	IM6102-1I	Intersil	
	IM6102-1M	† Intersil	
	IM6102AI	Intersil	
	IM6102AM	† Intersil	
	IM6102I	Intersil	
Peripheral Interface Element			
	HD6101-2	**† Harris**	**(1488)**
	HD6101-9	**Harris**	**(1488)**
	HD6101C-9	**Harris**	**(1488)**
	IM6101-1I	Intersil	
	IM6101-1M	† Intersil	
	IM6101AI	Intersil	
	IM6101AM	† Intersil	
	IM6101I	Intersil	
Programmable Asychronous Communications Interface			
	HD6406	**Harris**	**(1492,1495)**
Universal Asynchronous Receiver-Transmitter (UART) (See also Interface-Serial Transmitters-Receivers)			
	HD6402-2	**† Harris**	**(1492)**
	HD6402-9	**Harris**	**(1492)**
	HD6402C-9	**Harris**	**(1492)**
	IM6402	**Intersil**	**(3041)**
	IM6402-1I	**Intersil**	**(3041)**
	IM6402-1M	**† Intersil**	**(3041)**
	IM6402AI	**Intersil**	**(3041)**

(Continued)

Function	Device	Source	
Universal Asynchronous Receiver-Transmitter (UART) (See also Interface-Serial Transmitters-Receivers) (Cont'd)			
	IM6402AM	**† Intersil**	**(3041)**
	IM6403	**Intersil**	**(3041)**
	IM6403-1I	**Intersil**	**(3041)**
	IM6403AI	**Intersil**	**(3041)**
	IM6403AM	**† Intersil**	**(3041)**
Hex Buffer/Driver, Three-State			
	HD6495-2	**† Harris**	**(1491)**
	HD6495-9	**Harris**	**(1491)**
Octal Bus Buffer/Driver			
	HD6436-2	**† Harris**	**(1491)**
	HD6436-9	**Harris**	**(1491)**
One-of-Eight Decoder/Driver, Latched			
	HD6440-2	**† Harris**	**(1491)**
	HD6440-9	**Harris**	**(1491)**
20-Bit I/O Port	IM6103AI	Intersil	
	IM6103AM	† Intersil	
	IM6103C	Intersil	
	IM6103I	Intersil	
	IM6103M	† Intersil	

TLCS-12

Function	Device	Source	
Microprocessor			
	T3190	Toshiba	
Input/Output Control Unit			
	T3418	Toshiba	
Memory Control Unit			
	T3416	Toshiba	

16 Bit

1610

Function	Device	Source	
Microprocessor			
	MN1610	Panasonic	
	MN1611	Panasonic	
DMA(direct memory access) Controller			
	MN1650	Panasonic	
Realtime System Controller			
	MN1640	Panasonic	
SCA(sub-channel adaptor)			
	MN1630	Panasonic	
	MN1631	Panasonic	

8000

Function	Device	Source	
Microprocessor, Non-Segmented			
	AMZ8002	AMD	
	Z8002	SGS	
	Z8002	**Zilog**	**(1741)**
	Z8002A	**Zilog**	**(1741)**
	Z8002B	**Zilog**	**(1741)**
Microprocessor, Segmented			
	AMZ8001	AMD	
	Z8001	SGS	
	Z8000	**Zilog**	**(1741,1756)**
	Z8001	**Zilog**	**(1741)**
	Z8001A	**Zilog**	**(1741)**
	Z8001B	**Zilog**	**(1741)**
Microprocessor, Virtual Memory			
	Z8003	**Zilog**	**(1742)**
	Z8003A	**Zilog**	**(1742)**
	Z8003B	**Zilog**	**(1742)**
	Z8004	**Zilog**	**(1742)**
	Z8004A	**Zilog**	**(1742)**
	Z8004B	**Zilog**	**(1742)**
Arithmetic Processing Unit			
	Z8070-Z-APU	Zilog	

† Military Temperature Range (−55° to 125°C)

* Typical Value

Bold face indicates additional data is provided on the page noted.

© IC MASTER 1984

MICROPROCESSOR–System Components (Cont'd)

Function	Device	Source	Line
16 Bit			
8000 (Cont'd)			
Burst Error Processor			
	AMZ8065	AMD	
	Z8065-Z-BEP	**Zilog**	**(1747)**
Clock Generator			
	AMZ8127	AMD	
Counter Timer I/O			
	AMZ8036	AMD	
	Z8036-CIO	SGS	5
	Z8036-Z-CIO	**Zilog**	**(1745)**
	Z8036A-Z-CIO	**Zilog**	**(1745)**
CRT Controller	AMZ8052	AMD	
Data Cyphering Processor			
	AMZ8068	AMD	
	Z8068-Z-DCP	**Zilog**	**(1747)** 10
Direct Memory Access			
	AMZ8016	AMD	
	Z8016-Z-DTC	**Zilog**	**(1744)**
Dynamic Memory Controller			
	AMZ8164B	AMD	
Error Detection and Correction Circuit			
	AMZ8160	AMD	
First In/First Out Buffer			
	AMZ8060	AMD	15
	Z8060-FIFO	SGS	
	Z8060-Z-FIFO	**Zilog**	**(1746)**
First In/First Out I/O			
	AMZ8038	AMD	
	Z8038-FIO	SGS	
	Z8038-Z-FIO	**Zilog**	**(1746)** 20
	Z8038A-FIO	**Zilog**	**(1746)**
Floppy Disc Controller			
	FD1793-02	Western	
	FD1797-02	Western	
Intelligent Peripheral Controller			
	Z8090-Z-UPC	**Zilog**	**(1755)**
Memory Driver	AMZ8161	AMD	25
	AMZ8162	AMD	
Memory Interface Controller			
	AMZ8163	AMD	
Memory Management Unit			
	Z8010-MMU	SGS	
	Z8010-Z-MMU	**Zilog**	**(1743)**
	Z8010A-Z-MMU	**Zilog**	**(1743)** 30
	Z8010B-Z-MMU	**Zilog**	**(1743)**
Paged Memory Management Unit			
	Z8015-PMMU	**Zilog**	**(1743)**
RAM Driver, Three-State Outputs			
	AMZ8165	AMD	
	AMZ8166	AMD	
Serial Input/Output			
	AMZ8030	AMD	35
	Z8030-SCC	SGS	
	Z8030-Z-SCC	**Zilog**	**(1744)**
	Z8030A-Z-SCC	**Zilog**	**(1744)**
System Timing Controller			
	AMZ8073	AMD	
Universal Peripheral Controller			
	Z8034-UPC	SGS	40
Video System Controller			
	AM8152	**AMD**	**(1433)**
	AM8153	AMD	
Octal Bus Driver			
	AMZ8140	AMD	
	AMZ8144	AMD	
Octal Bus Transceiver			
	AMZ8103	AMD	45
	AMZ8104	AMD	
	AMZ8107	AMD	
	AMZ8108	AMD	
Octal Latch	AMZ8133	AMD	
	AMZ8173	AMD	50
Octal Register	AMZ8120	AMD	
3 to 8 Chip Select Decoder			
	AMZ8148	AMD	
3 to 8 Decoder	AMZ8136	AMD	
8-Bit Equal-to Comparator			
	AMZ8121	AMD	
8096			
Microcomputer, 232x8 RAM, 10-Bit A/D, IO, 12 MHz			
	8096	Intel	55
Microcomputer, 232x8 RAM, 10-Bit A/D, 8Kx8 ROM, I/O, 12 MHz	8396	Intel	
9440			
Microprocessor			
	F9440C	Fairchild	
	F9440M	† Fairchild	
	F9445	**† Fairchild**	**(1468)**
	F944518	† Fairchild	60
	F944520	† Fairchild	
	F944524	† Fairchild	
Advanced Data Link Controller			
	F9454	Fairchild	
Communication and Console Controller			
	F9470	**Fairchild**	**(1469)**
Floating-Point Processor			
	F9443	† Fairchild	65
I/O Control Unit			
	F9442C	Fairchild	
I/O Controller; reads data from memory to produce composite video signal; interal display memory mux.			
	F9447	**Fairchild**	**(1468)**
Memory Control Unit			
	F9442C	Fairchild	
Memory Management and Protection Unit			
	F9444	† Fairchild	
Multiple Data Channel Controller			
	F9449	**† Fairchild**	**(1469)** 70
Programmable Multiport Interface			
	F9448	† Fairchild	
ROM, I/O, Timer			
	F9446	Fairchild	
16000			
Microprocessor			
	F16016	Fairchild	
	F16032	**Fairchild**	**(1470)**
	NS16032-6	**National**	**(1513)** 75
Floating-Point Slave Processor			
	NS16081	**National**	**(1513)**
GPIB Controller	**F16488**	**Fairchild**	**(1470)**
Interrupt Control Unit			
	NS16201-6	**National**	**(1514)**
	NS16202	**National**	**(1514)**
Memory Management Unit			
	NS16082	**National**	**(1513)** 80
Multiple Protocol Communications Controller			
	F16456	**Fairchild**	**(1470)**
Timing Control Unit			
	NS16201	**National**	**(1514)**
68000			
6800 devices are suitable for the 68000			
Microprocessor 8-Bit (bus interface version of MC68000)			
	MC68008	**Motorola**	**(1506,1508)**
	SCN68008	**Signetics**	**(1690)** 85
Microprocessor 16-Bit (virtual machine version of MC68000)	**MC68010**	**Motorola**	**(1506,1508)**
	SCN68010	**Signetics**	**(1690)**
Microprocessor			
	HD68000	Hitachi	
	HD68000-10	Hitachi	
	HD68000-4	Hitachi	90
	HD68000-6	Hitachi	
	HD68000-8	Hitachi	
	MK68000-10	Mostek	
	MK68000-4	Mostek	
	MK68000-6	Mostek	95
	MK68000-8	Mostek	
	MC68000-10	**Motorola**	**(1506,1508,2040)**
	MC68000-12	**Motorola**	**(1506,1508,2040)**
	MC68000-4	**Motorola**	**(1506,1508,2040)**
	MC68000-6	**Motorola**	**(1506,1508,2040)** 100
	MC68000-8	**Motorola**	**(1506,1508,2040)**
	R68000	Rockwell	
	SCN68000	**Signetics**	**(1689,1690)**
	EF68000	Thomson-CSF	
	MC68000C4	Thomson-CSF	105
	MC68000C6	Thomson-CSF	
Bus Arbitration Module			
	MC68452	Motorola	
Bus Interrupter Module			
	MC68153	Motorola	
Cluster Terminal Controller			
	MC68122	Motorola	
	MC68122-1	Motorola	110
Communications, Multi-protocol Communications Controller	**MC2652**	**Motorola**	**(1511)**
	MC68652	**Motorola**	**(1506,1511)**
Communications, Programmable Communications Interface	**MC2661**	**Motorola**	**(1512)**
	MC68661	**Motorola**	**(1506,1512)**
Communications, Dual Asynchronous Receiver/Transmitter	**MC68681**	**Motorola**	**(1506,1512)** 115
Communications, Dual Universal Serial Communications Controller	**MC68562**	**Motorola**	**(1506,1511)**
	SCN68562	**Signetics**	**(1693)**
Disk, Intelligent Multiple Disk Controller			
	MC68454	**Motorola**	**(1506)**
	SCN68454	**Signetics**	**(1691)**
Disk, Phase Locked Loop			
	SCB68459	**Signetics**	**(1693)** 120
DMA Controller	HD68450	Hitachi	
	MC68450	**Motorola**	**(1506,1510)**
	SCB68430	**Signetics**	**(1692)**
DMA Controller, Dual			
	MC68440	Motorola	
	SCN68440	**Signetics**	**(1691)** 125

† Military Temperature Range (−55° to 125°C)

* Typical Value

Bold face indicates additional data is provided on the page noted.

MICROPROCESSOR–System Components (Cont'd)

16 Bit

68000 (Cont'd)

Function	Device	Source	Line
Dynamic RAM Controller Interface Circuit	DP84312	National	
	DP84322	National	
Error Detection and Correction Circuit	**MC74F2960**	**Motorola** (822)	
Floating-Point Co-processor	**MC68881**	**Motorola** (1506,1509)	
Intelligent Peripheral Controller	**MC68120**	**Motorola** (1501,1505,1509,1506)	5
	MC68121	**Motorola** (1501,1509)	
	SCN68120C	Signetics	
Local Area Network Controller for Ethernet	MK68590	Mostek	
Memory Management Unit	**MC68451**	**Motorola** (1506,1510)	
	SCN68451	**Signetics** (1691)	10
Multi-Function Peripheral	MK68901	Mostek	
	MC68901	**Motorola** (1506,1512)	
Occam Programming System	IMSP100	Inmos	
	IMSP200	Inmos	
	IMSP600	Inmos	15
	Occam	**Inmos** (1913)	
Parallel Interface/Timer	MK68230P10	Mostek	
	MK68230P8	Mostek	
	MC68230L10	**Motorola** (1506,1509)	
	MC68230L8	**Motorola** (1506,1509)	20
	SCN68230C	**Signetics** (1691)	
Polynomial Generator Checker	**MC2653**	**Motorola** (1512)	
	MC68653	**Motorola** (1506,1512)	
Serial Input Output	MK68564	Mostek	
	MC68564	**Motorola** (1506,1511)	25
Video Display Generator	MC6847	Motorola	
	MC6847Y	**Motorola** (1505)	
Single-Step Circuit (allows step-by-step interruption of sequential programming steps)	SSC680	AWI	
Dual UART	MC68601	Motorola	
	SCN68681C	**Signetics** (1694)	30

MicroNOVA

Function	Device	Source	Line
Microprocessor	MN602	DataGen	
	MicroNOVA	DataGen	
I/O Transceiver	MN629	DataGen	
I/O Transceiver Buffer	MN636	DataGen	

Transputer

Function	Device	Source	Line
Occam Programming System	IMSP100	Inmos	35
	IMSP200	Inmos	
	IMSP600	Inmos	
	Occam	**Inmos** (1913)	

16/32 Bit

16000

Function	Device	Source	Line
Microprocessor, 8-Bit version	F16000	Fairchild	
	F16008	Fairchild	40
	NS16008	National	
Microprocessor, 8-Bit	F16000	Fairchild	
	F16008	Fairchild	
	NS08032	**National** (1513)	
	NS16008	National	45
Microprocessor, 16-Bit	**NS16032**	**National** (1513)	
	NS16C032	**National** (1513)	
Microprocessor, 32-Bit	F32032	Fairchild	
	NS32032	**National** (1513)	
	NS32C032	**National** (1513)	50
	NS32C132	**National** (1513)	
	NS32C32	National	
Microprocessor	NS16016	National	
Bus Arbiter	F16204	Fairchild	
	NS16204	National	55
CRT Controller	**F16413**	**Fairchild** (1470)	
	F16413	Fairchild	
	NS16413	**National** (1514)	
	NS16413	National	
DMA Controller	F16203	Fairchild	60
	NS16203	**National** (1514)	
Floating-Point Slave Processor	F16081	Fairchild	
GPIB Controller	**NS16488**	**National** (1514)	
Interrupt Control Unit	F16202	Fairchild	
LAN Coax Receiver Interface	**DP8392**	**National** (1514)	65
Memory Management Unit	F16082	Fairchild	
Multiple Protocol Communications Controller	**NS16456**	**National** (1514)	
Packet Switching Frame Level Controller	F16425	Fairchild	
	NS16425	National	
Terminal Management Processor	**NS16455**	**National** (1514)	70
Timing Control Unit	F16201	Fairchild	
Very Intelligent Programmable Controller	F16105	Fairchild	

32 Bit

68000

Function	Device	Source	Line
Microprocessor, 32-Bit. See 16-Bit series for additional system components.	**MC68020**	**Motorola** (1506,1508)	
	SCN68020	**Signetics** (1690)	

80000

Function	Device	Source	Line
Microprocessor	**Z80000**	**Zilog** (1749)	75
Arithmetic Processing Unit	Z8070-Z-APU	Zilog	

Transputer

Function	Device	Source	Line
Processor, Memory, Communications.	T4242	Inmos	
	Transputer	**Inmos** (1913)	

iAPX432

Function	Device	Source	Line
Microprocessor	iAPX43201	Intel	
	iAPX43202	Intel	80
Bus Interface Unit	iAPX43204	Intel	
Interface Processor	iAPX43203	Intel	
Memory Control Unit	iAPX43205	Intel	

Peripheral Controllers

Function	Device	Source	Line
Asynchronous Serial Communications Controller	**Z8031-Z-ASCC**	**Zilog** (1745)	
Bubble Memory Controller	7220	Intel	85
	TMS9923	TI	
Bus Arbitration Module	**MC68452**	**Motorola** (1506,1511)	
Bus Extender/Repeater	N8X41	Signetics	
Cassette/Cartridge Data Handler	CCC3500	SMC	
Cassette Controller	μPD371	NEC	90
	T3444B	Toshiba	
CCITT Protocol Controller	WD2520	Western	
Clock Generator and Controller	**Z8581-C8C**	**Zilog** (1752)	
Counter/Timer, Parallel I/O	**Z8536-CIO**	**Zilog** (1752)	
	Z8536A-CIO	**Zilog** (1752)	95
CRT, Advanced Video Display Controller	**SCN2674**	**Signetics** (1682)	
CRT, Color/Monochrome Attributes Controller	SCB2675	Signetics	
CRT Controller	**AM8052**	**AMD** (1433)	
	SY6845R	Synertek	
	WD8276	**Western** (3110)	100
CRT Controller, Enhanced	**SY6845E**	**Synertek** (1696)	
CRT Controller, Mask-Programmable, Internal Dotclock, Cursor, and Row Start Address Registers, 50/60 Hz Refresh Rate	DP8350	National	
CRT Data Row Buffer	CRT9006-135	SMC	
	CRT9006-83	SMC	
CRT, Graphic Processor	**SY66450**	**Synertek** (1696)	105
CRT Graphics Controller	μPD7220	NEC	
CRT Processor	EF9364	Thomson-CSF	

† Military Temperature Range (−55° to 125°C)

* Typical Value

Bold face indicates additional data is provided on the page noted.

© IC MASTER 1984

MICROPROCESSOR–System Components (Cont'd)

Peripheral Controllers (Cont'd)

Function	Device	Source	Line
CRT, Programmable Video Interface; provides game circuits (sound, score, video, etc.) for processor based systems.	SCN2636A	Signetics	
CRT, Programmable Video Timing Controller	SCN2672A	Signetics	
CRT, Router Scan	**SY66550**	**Synertek (1696)**	
CRT Terminal Controller	~~MS455~~	~~National (1529)~~	
CRT Text Coprocessor	82730	Intel	5
CRT, Universal Video Interface	SCN2637A	Signetics	
CRT, Video Attributes Controller	**SCB2677A**	**Signetics (1684)**	
	SCB2677B	**Signetics (1684)**	
	SCN2673A	Signetics	
	SCN2673B	Signetics	10
CRT Video Attributes Controller (graphic logic, attributes logic, data and attributes latches, cusor control and shift register)	CRT9021B	SMC	
CRT Video Attributes Controller/Video Generator (video shift register, horizontal and vertical retrace blanking, graphics generation, attributes buffer)	CRT8021	SMC	
	CRT8021-003	SMC	
CRT, Video Character Generator	**HS3819**	**Harris (4658)**	
CRT, Video Display Generator, Reads Data from Memory to Produce Composite Video Signal, Internal Display Memory Mux	F6847	Fairchild	15
	M5C6847-1	Mitsubishi	
	MC6847	Motorola	
CRT, Video Display Processor	TMS9918A	TI	
	TMS9928A	TI	
	TMS9929A	TI	20
	WD9918	**Western (3112)**	
	WD9928	**Western (3112)**	
	WD9929	**Western (3112)**	
CRT Video Display-Controller Video Generator	SND8002	SSS	
	CRT8002	SMC	25
CRT, Video Interface Controller	82731	Intel	
CRT, Video Processor and Controller	CRT9007	SMC	
CRT, Video RGB DAC	RGBDAC4T	Intech	
	RGBDAC8E	Intech	
	RGBDAC8T	Intech	30
	VDAC444	Intech	
CRT Video Timer-Controller	SND5027	SSS	
	SND5037	SSS	
	CRT5027	SMC	
CRT Video Timer-Controller, Line Lock Feature	CRT5057	SMC	35
CRT Video Timer-Controller, Preprogrammed	CRT5047	SMC	
CRT Video Timer-Controller, ROM Programmed	CRT5037	SMC	
CRT Video Timer-Controller, User Programmable, Generates timing signals for presentation and formatting of video data on CRT	TMS9927	TI	

Function	Device	Source	Line
Display Character and Graphics Generator	**SCN2670A**	**Signetics (1677)**	
	SCN2670B	**Signetics (1677)**	
Display Controller (Dot), LED and Keyboard Interface	MTX-A1	Matrox	
Display Controller (Segment), Keyboard Interface	MTX-B1	Matrox	
Display Controller, 4-Character Alphanumeric	MM74C956	National	45
Display Controller, 14 to 18 Segment Vacuum Flourescent Displays (16 characters)	10937	Rockwell	
Dot Matrix Printer Controller	8295	Intel	
	μPD781	NEC	
	μPD782	NEC	
Double Row Buffer (RAM-based buffer that appears to the system as two octal shift registers of dynamically variable length)	CRT9212	SMC	50
Enhanced Programmable Communications Interface (EPCI)	**MC2661A**	**Motorola (1512)**	
	MC2661B	**Motorola (1512)**	
	MC2661C	**Motorola (1512)**	
	MC68661A	**Motorola (1506,1512)**	
	MC68661B	**Motorola (1506,1512)**	55
	MC68661C	**Motorola (1506,1512)**	
Error Detection and Support Logic (Winchester)	**WD1014**	**Western (1724)**	
Ethernet Data Link Controller	AM7990	AMD	
	MB8795A	Fujitsu	
	8001	**SEEQ (1600)**	60
Ethernet LANCE	**AM7990**	**AMD (1433,3327)**	
Ethernet, Local Area Network Controller	AM7990	AMD	
Ethernet, Manchester Code Coverter	**8002**	**SEEQ (1598)**	
Ethernet, Manchester Encoder/Decoder	MEDM	Technitrol	
Ethernet, Serial Interface Adapter	AM7791	AMD	65
Ethernet SIA	**AM7991**	**AMD (1433,3327)**	
Ethernet Transceiver	AM7995	AMD	
Floppy Disc Controller/Formatter (single and double density)	M5W1791-02	Mitsubishi	
	SAB179X	Siemens	
	FDC1761-02	SMC	70
	FDC1763-02	SMC	
	FDC1765-02	SMC	
	FDC1767-02	SMC	
	FDC1791	SMC	
	FDC1792	SMC	75
	FDC1793	SMC	
	FDC1794	SMC	
	FDC1795	SMC	
	FDC1797	SMC	
	SY1791-02	**Synertek (1696)**	80
	SY1793-02	**Synertek (1696)**	
	T3444A	Toshiba	
	FD1761	Western	
	FD1771-01	Western	
	FD1781-01	Western	85

(Continued)

Function	Device	Source	Line
Floppy Disc Controller/Formatter (single and double density) (Cont'd)	FD1791-02	Western	
	FD1792-02	Western	
	FD1793-02	Western	
	FD1794-02	Western	
	FD1795-02	Western	90
	FD1797-02	Western	
	WD1770	**Western (1733)**	
	WD1772	**Western (1733)**	
	WD1773	**Western (1735)**	
	~~WD2791-02~~	~~Western~~	95
Floppy Disc Controller/Transmitter (IBM 3740 compatible)	MB8866	Fujitsu	
	MB8876A	Fujitsu	
	MB8877A	Fujitsu	
	INS1771	National	
	μPD765	NEC	100
	SAB1791-02	Siemens	
Floppy Disc Controller, Two-Sided	μPD765	NEC	
	T3444D	Toshiba	
Floppy Disc Data Separator	FDC9216	SMC	
Floppy Disc Hard Sector Data Handler	μPD372	NEC	105
	FDC3400	SMC	
Floppy Disk Controller for Song format	**μPD7265**	**NEC (1549)**	
Floppy Disk Controller, Programmable	8271	Intel	
Floppy Disk Controller/Transmitter, Single Chip	WD2791	Western	
	WD2793-02	Western	110
	WD2795-02	Western	
	WD2797-02	Western	
Floppy Disk Controller, Single/Double Density	MB8876	Fujitsu	
	8272A	Intel	
	μPD765	NEC	115
Floppy Disk Data Separator	WD9216-00	Western	
	WD9216-01	Western	
Floppy Disk Interface Circuit	FDC9229	SMC	
Floppy Disk-Programmable Formatter/Controllers	INS82891	National	
	INS82893	National	120
Floppy Support Logic	WD1691	Western	
Function Generator, Peripheral Controller	CY360	Cybernetic	
GPIB Controller	8292	Intel	
	WD9914	**Western (3111)**	
GPIB Talker/Listener Interface	8291A	Intel	125
GPIB Transceiver	8293	Intel	
GPIB Universal Interface	μPD7201	NEC	
Graphic Display Processor	EF9365	Thomson-CSF	
	EF9366	Thomson-CSF	
	EF9367	Thomson-CSF	130
Graphics Display Controller	82720	Intel	
	μPD7220	**NEC (1538)**	
Hard Disc Data Separator	**DP8460**	**National (1514)**	

† Military Temperature Range (−55° to 125°C)

* Typical Value

Bold face indicates additional data is provided on the page noted.

MICROPROCESSOR–System Components (Cont'd)

Peripheral Controllers (Cont'd)

Function	Device	Source	Line
Hard Disc Pulse Detector	**DP8464**	**National** (1514)	
Intelligent Stepper Motor Controller	CY500	Cybernetic	
	CY512	Cybernetic	
Keyboard/Display Interface	8279	Intel	
LCD/Console Controller for Alphanumeric 5x7 Dot Matrix Display	CY300	Cybernetic	5
Local Area Network Coax Receiver Interface	DP8392	National	
Local Area Network Communications, Ethernet Serial Interface	82501	Intel	
	82586	Intel	
Local Area Network Controller	MK68590	Mostek	
	COM9026	SMC	10
Local Network Token Access Controller	**WD2840**	**Western** (1172)	
Manchester Encoder/Decoder	MB502	Fujitsu	
	HS15530RH	**Harris** (4660)	
	MEDM	Technitrol	
Microprogram Controller	IDM2910A	National	15
Mini Floppy Disc Controller	FD1761-02	Western	
	FD1763-02	Western	
	FD1765-02	Western	
	FD1767-02	Western	
Multi-Protocol Communications Circuit (includes SDLC, BiSync)	SCN2652A	Signetics	20
Multi-Protocol Communications Controller	MC68561	Motorola	
Multi-Protocol Serial Controller	**AMZ8530**	**AMD** (1433)	
	μPD7201	NEC	
	Z8530-SCC	**Zilog** (1751)	
Multi-System Control Chip. Interfaces any two CYxxx Devices to a Computer, Keyboard or RS232 Terminal	CY250	Cybernetic	25
Parallel to Serial Interface	CY232	Cybernetic	
Polynomial Generator Checker	SCN2653A	Signetics	
Printer Controller, for 5x7 Dot Matrix Printer	CY480	Cybernetic	
Programmable Communication Interface	SCN2661B	Signetics	
	SCN2661C	Signetics	30
Programmable Communication Intreface	SCN2661A	Signetics	
Programmable Controller	**AM9519A**	**AMD** (1445)	
	CY750	Cybernetic	
Programmable CRT Controller	8275	Intel	
	WD8275	**Western** (3109)	35
Programmable DMA Controller	8237	Intel	
	8257	Intel	
Programmable Interval Timer	8253	Intel	
Programmable Interval Timer, High Performance	8254	Intel	
Programmable Keyboard and Communications Controller	SCN2671A	Signetics	40
Programmable Peripheral Interface	8255A	Intel	
Serial Interface Adapter (Ethernet Controller Interface)	MK3891	Mostek	
Serial Interface Component	**MA2232**	**National** (2049)	
Serial Timer Interrupt Controller	MK3801	Mostek	
Small System CRT Controller	8276	Intel	45
SMD Controller/Formatter	**WD1050**	**Western** (1728)	
Sound Generator	AY3-8910	GI	
	AY3-8912	GI	
	SN76477	TI	
	SN76488	TI	50
TV Sync Generator (NTSC)	SCN2622A	Signetics	
TV Sync Generator (PAL)	SCN2621A	Signetics	
TV-CRT Processor	CRT96364	SMC	
	SFF96364	Thomson-CSF	
	SFF96366	Thomson-CSF	55
Universal Peripheral Controller	8590	Synertek	
	Z8590	**Zilog** (1755)	
	Z8590-UPC	**Zilog** (1755)	
Universal Peripheral Interface, I/O Expander	8243	Intel	
Universal Peripheral Interface, 1k EPROM	8741A	Intel	60
Universal Peripheral Interface, 1K ROM	8041AH	Intel	
Universal Peripheral Interface, 2K EPROM	8742	Intel	
Universal Peripheral Interface, 2K ROM	8042	Intel	
Universal Peripheral Interface, 4K EPROM	8744	Intel	
Universal Peripheral Interface, 4K ROM	8044	Intel	65
Video Attributes Controller	SCB2673A	Signetics	
	SCB2673B	Signetics	
Video System Controller (See 8052 CRT Controller)	AM8152	AMD	
	AM8153	AMD	
Videotext CRT Display Processor	EF9340	Thomson-CSF	
	EF9341	Thomson-CSF	70
Winchester, Buffer Manager Control Processor (used with WD1014)	**WD1015**	**Western** (1725)	
Winchester Controller/Formatter	82062	Intel	
	WD1010	**Western** (1720)	
Winchester Controller with Error Correcting Codes	WD1001	Western	75
Winchester Data Separator	**WD1011**	**Western** (1722)	
	WD1100-13	**Western** (1730)	
Winchester Disc Controller Chip Set	WD1000	Western	
	WD1100	**Western** (1730)	
Winchester Disk Controller Board	**WD1002-MTB**	**Western** (2060)	80
	WD1002-SHD	**Western** (2058)	
Winchester Disk Controller/Formatter	**WD2010**	**Western** (1726)	
Winchester, Error Detection (Support Logic for WD1015)	WD1014	Western	
Winchester/Floppy Disk Controller	WD1002	Western	
Write Precompensation Device	**WD1012**	**Western** (1723)	85
Dual Direct Memory Access Controller	**MC68440**	**Motorola** (1506,1510)	
Dual-Channel Multiprotocol Controller	8274	Intel	
Two Port MOS Dynamic RAM Controller, See also Interface-Memory Drivers	**74LS764**	**Signetics** (895)	
Four Phase Clock Generator	WD2143-03	Western	

General Purpose

Function	Device	Source	Line
Microprocessor Compatible D/A Converter	**DAC-808A**	**† PMI** (3567)	90
	DAC-808B	**† PMI** (3567)	
	DAC-808E	**PMI** (3567)	
	DAC-808F	**PMI** (3567)	
	DAC-808G	**PMI** (3567)	
Addressable Peripheral Driver	**NE590**	**Signetics** (3625)	95
	NE591	**Signetics** (3625)	
Advanced Educational Arithmetic Game	MM57455	National	
Analog Input Data Acquisition Controller for A/D Converter	CY600	Cybernetic	
Analog Input, Multiplexer, A/D (analog to pulse width output)	μA9708	Fairchild	
Analog Input, Multiplexer, A/D Converter	MP20	Burr-Brown	100
	MP21	Burr-Brown	
	MP22	Burr-Brown	
	MP32	Burr-Brown	
	μPD7001	NEC	
	μPD7002	NEC	105
Analog Output, D/A Converter, Latched Input	NE5018	Signetics	
Analog Output, Dual D/A Converter	**MP10**	**Burr-Brown** (2849)	
	MP11	**Burr-Brown** (2849)	
Arithmetic Processor	**AM9511**	**AMD** (1440)	
	AM9511A	**AMD** (1440)	110
	AM9511A-5	**AMD** (1440)	
	AM9512	**AMD** (1441)	
	8231A	Intel	
	TMS1018	TI	
Asynchronous Bidirectional Bus Extender and Repeater	**N8X41**	**Signetics** (1645)	115
Asynchronous Communication Interface Adapter	S6850	AMI	
	S68A50	AMI	
	S68B50	AMI	
	F6850	Fairchild	
	F68A50	Fairchild	120
	MC6850	Motorola	
	MC68A50	Motorola	
	MC68B50	Motorola	

(Continued)

† Military Temperature Range (−55° to 125°C)

* Typical Value

Bold face indicates additional data is provided on the page noted.

© IC MASTER 1984

MICROPROCESSOR–System Components (Cont'd)

General Purpose (Cont'd)

Function	Device	Source	Line
Asynchronous Communication Interface Adapter (Cont'd)			
	EF68A50	Thomson-CSF	
	EF68B50	Thomson-CSF	
	EF6850	Thomson-CSF	
Burst Error Processor			
	AM9520	**AMD (1433,1446)**	
	AMZ8065	AMD	5
Bus Interrupter Module			
	MC68153	Motorola	
Clock/Calendar with Serial I/O (Inter IC interface)			
	PCB8573	Signetics	
Clock Generator and Controller			
	Z8581	Zilog	
Control Sequencer (to control fetch sequence of microinstructions)			
	N8X02	Signetics	
Data Encryption Unit			
	8294	Intel	10
Direct Memory Access Controller			
	AM9517A	**AMD (1438,1443)**	
Direct Memory Access (16-Bit)			
	DM1883	Western	
Encoder/Decoder MIL-STD-1553 (Manchester serial word to 16-bit parallel bus)			
	MT32008	DDC	
Fast Fourier Transformer			
	S28214A	AMI	
Floating Point Processing Unit			
	8232	Intel	15
Function Generator, D/A Controller			
	CY360	Cybernetic	
General Purpose Interface Adapter (IEEE 488 bus)			
	96LS488DC	Fairchild	
	96LS488DM	† Fairchild	
	μPD7210	**NEC (1535)**	
	HEF4738	Signetics	20
Peripheral Interface Adapter			
	S6821	AMI	
	S68A21	AMI	
	S68B21	AMI	
	F6820	Fairchild	
	F6821	Fairchild	25
	F68A21	Fairchild	
	F68B21	Fairchild	
	MC6821	Motorola	
	MC68A21	Motorola	
	MC68B21	Motorola	30
	SY6520	Synertek	
	SY6522	Synertek	
	SY6522A	Synertek	
	EF6821	Thomson-CSF	
	EF68A21	Thomson-CSF	35
	EF68B21	Thomson-CSF	
Priority Interrupt Controller			
	AM25LS2513C	**AMD (1427)**	
	AM2914C	AMD	
	AM2914M	† AMD	
	M8214	† Intel	40
	MC6828	Motorola	
	MC8507	Motorola	
	μPB8214	NEC	
Programmable Integrated Controller/Sequencer			
	LS7270	LSIComp	
Real-Time Clock Interface (allows time of day info to be retrieved over μP bus)			
	HI8000	Holt	45

Function	Device	Source	Line
See also Interface-Error Checking Circuits Keyboard Encoders, Line Circuits, Memory and Peripheral Drivers, Serial Transmitters/Receivers, Memory-EAROMs, FIFOs, LIFOs, PLAs, PROMs, RAMs, ROMs			
Speech Synthesis System			
	Digitalker	National	
Super Number Cruncher			
	MM57409	National	
Synchronous Serial Data Adapter			
	F6852	Fairchild	
	MC6852	Motorola	50
	EF6852	Thomson-CSF	
System Timing Controller			
	AM9513	**AMD (1433,1436,1442)**	
Decimal/Binary Up/Down Counter			
	MM57436	National	
8-Digit LED Direct-Drive Memory Calculator			
	MM57459	National	

† Military Temperature Range (−55° to 125°C)

* Typical Value

Bold face indicates additional data is provided on the page noted.

SECTION	PRODUCTS IN SECTION
Digital	Arithmetic functions, buffers/inverters, counters, decoders, drivers, flip-flops, gates, latches, memories, multiplexers, multivibrators, oscillators/dividers, shift registers, translators.
Military	Military-commercial/commercial-military cross-references; QPL-38510/xx list; military ICs.
Microprocessor	Microprocessors, microcomputers, and microprocessor system components.
Microprocessor Development Systems	Systems covered range from simple, single-user, text-editing stations to multi-user computers, dedicated to software development.
Microcomputer Boards	Microcomputer boards, hardware and software support.
Microcomputer Support Boards	Boards with functions and peripheral controllers
Interface	Analog switches, analog-to-digital converters, digital-to-analog converters, display converters, display drivers, error checking circuits, keyboard encoders-decoders, drivers, sense amplifiers, and transmitters/receivers.
Linear	Special-purpose amplifiers, arrays, comparators, consumer circuits, followers, operational amplifiers, phase locked loop circuits, telecommunication circuits, timers, voltage regulators, and special functions.
Memory	Character generators, code converters, FIFOs, LIFOS, E^2PROMs, PROMs, RAMs, ROMs, and shift registers.
PROM Programmers	Programmers for system development, production, and field service.
Custom/ Semicustom	Custom/semicustom gate arrays, standard cells, PLAs

SIX KEY PHASES OF NEW SYSTEM DEVELOPMENT

Planning

A good design

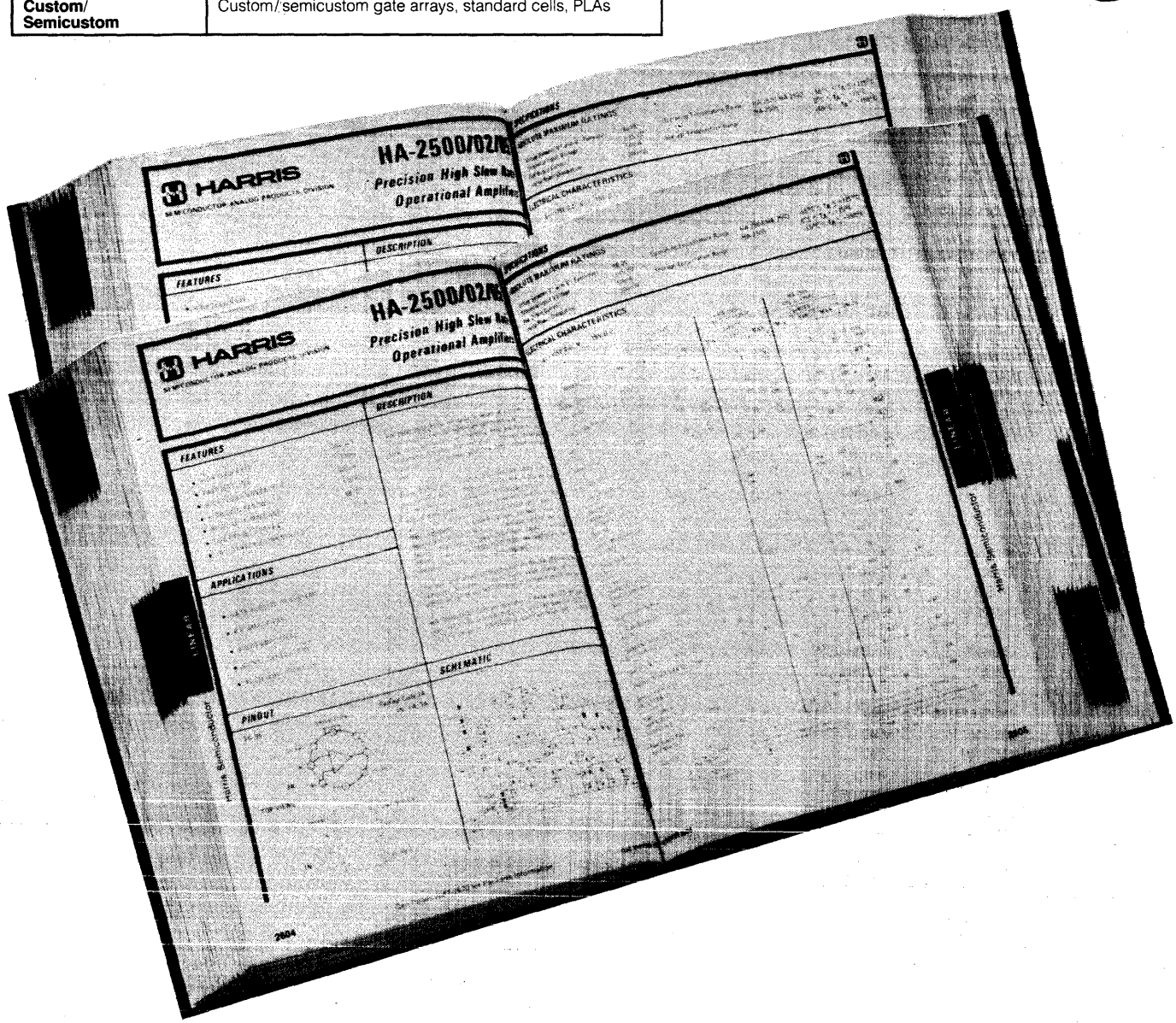

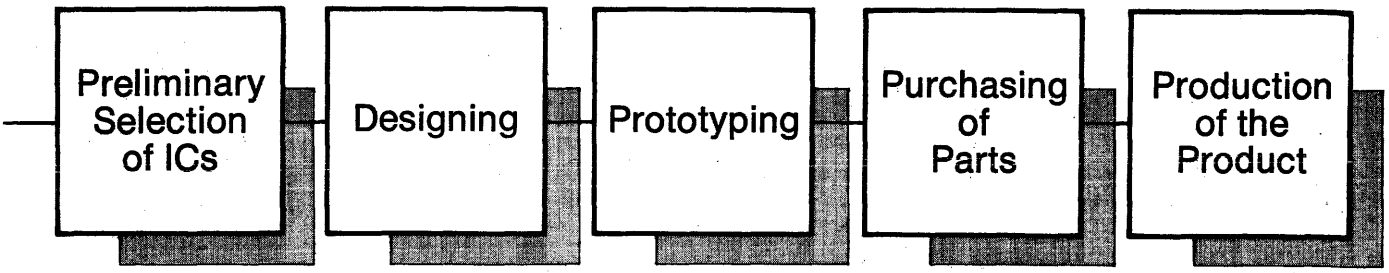

is "mastered" early.

When is the best time for an engineer to pick the integrated circuits that will go into his next design?

The best time is at an early stage in the design process when the engineer's plans are still flexible enough to take full advantage of the features selected.

There is a point in the early phases of every design when engineers focus on selecting integrated circuits. Specifications are examined, relative strengths and weaknesses of various devices are weighed, and the field of candidates is chosen. This is the critical time in the design cycle when designers want to be sure the right devices are in serious contention for their applications.

It is at this moment that the engineer reaches into his technical reference library. Of the material on his shelves, **IC MASTER** is the only reference source that has been especially prepared for this moment.

The engineer can look up each precise function that he needs and see all of the devices and their manufacturers that might satisfy his requirements. He sees this information for all manufacturers, not just for advertisers. But if an IC maker has chosen to include technical data for his products in **IC MASTER,** the engineer sees each index listing for that manufacturer in **bold face type** accompanied by the **page number** on which the data appears; the engineer can then turn immediately to the advertiser's technical data and see if the device fits his needs.

Next time, begin with the MASTER.

IC MASTER

Integrated Circuits Magazine
The magazine for the engineering design strategist*

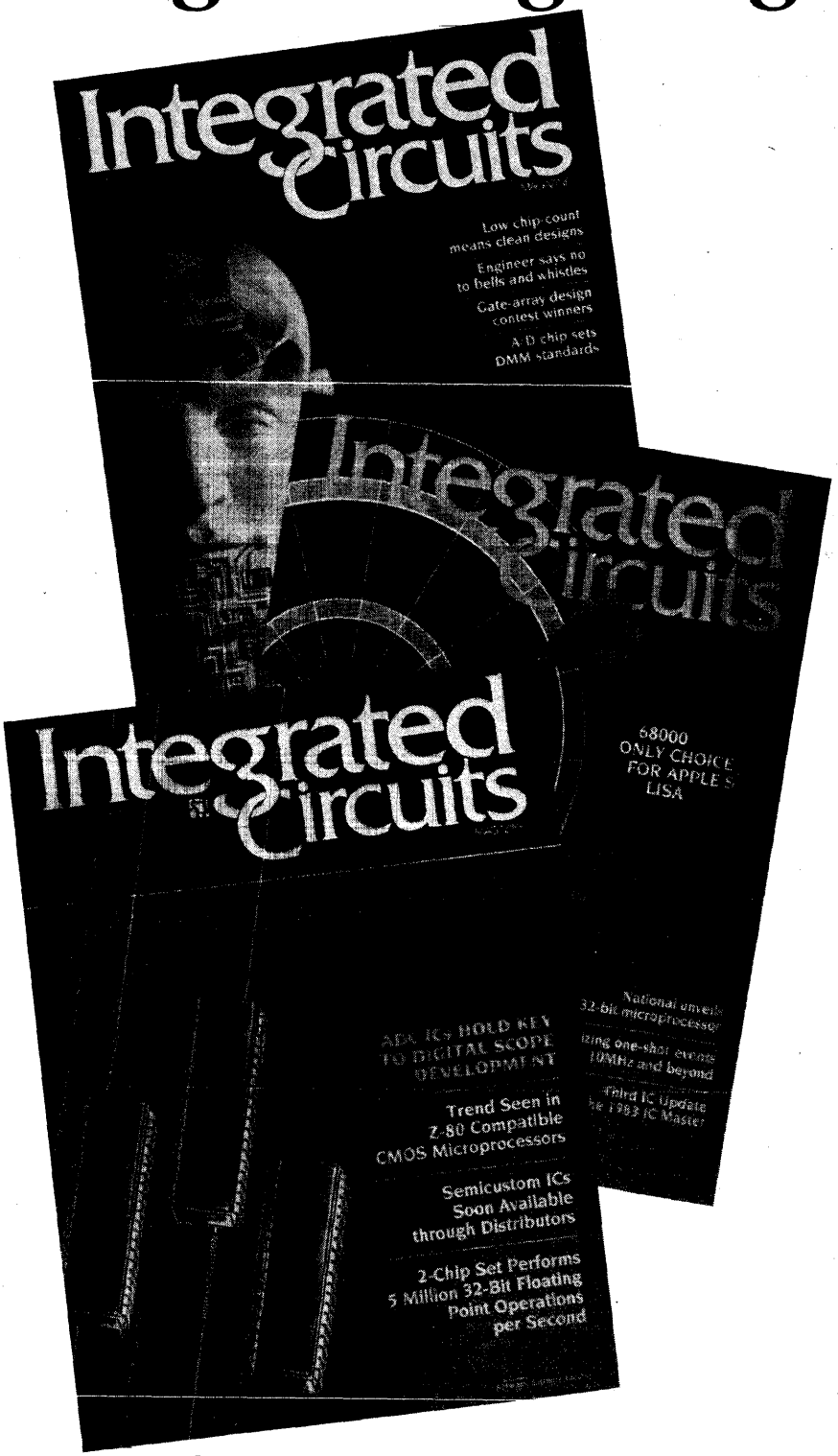

Integrated Circuits Magazine is the only publication written for senior design engineers and engineering managers who specialize in the specifying and use of ICs and related components in the design of instruments, equipment and systems.

It is unique in that it concentrates on reporting *from the viewpoint of the user.*

Each issue of *Integrated Circuits Magazine* includes staff-written interviews with leading designers at major IC customers, as well as articles written by IC users themselves.

Regular features include: IC User Feedback Reports, Semicustom Design Techniques, IC Design Problems and Solutions. What's New in ICs, and much more.

To receive *Integrated Circuits Magazine* absolutely FREE† simply give us your authorization right now! Just fill out, sign, date and return the subscription card located inside the back cover of Volume I.

Card missing? Additional subscription cards available from publisher upon request.

Integrated Circuits Magazine is designed for *YOU.*

**Designers who must keep pace with contemporary engineering design techniques, practices and trends, and how they affect the selection and application of integrated circuits, microcomputers, boards, and systems.*

†Integrated Circuits Magazine is made available on a complimentary basis to those qualified recipients within the United States only.

Canadian and Foreign Subscriptions are available, prepaid by check or money order payable in United States currency, at the following rates: $35.00 per year Canadian/Foreign; $55.00 per year Foreign via Air Mail; $18.00 per year non-qualified Domestic United States.

Integrated Circuits Magazine
Circulation Department
645 Stewart Ave.
Garden City, NY 11530
(516) 222-2500
TWX: 510-222-1673

Advanced Micro Devices

BIPOLAR MICROPROCESSOR PRODUCTS

MORE SPEED: NO MORE POWER

There's a good old tried and proven way to make faster IC's – burn more power. (That's the only real difference between "LS" and "S" devices). But that solution isn't satisfactory for LSI devices like the Am2900 Family. Power is constrained to existing levels for reliability reasons.

Am2900 parts are always designed to obtain the maximum speed at a power level which is safe for the package types and operating environment of the part. To increase speeds, new technologies must be used to build faster components at no increase in power.

NEW CIRCUIT DESIGN TECHNIQUES MAKE FASTER GATES

One way to make faster components is to use new circuit design techniques. The most obvious is internal ECL, which provides very fast gates at similar power levels to LS TTL. The Am29116 reaches microcycle times of 100ns through the use of internal ECL. Other design techniques, such as low-level logic (with very small logic swings on-chip), can also provide higher speeds without introducing the time penalty of ECL to TTL conversion.

Finally, very low power gates used in non-critical speed paths make more power available for use in critical speed paths. As the 2900 Family develops, all these technologies will be used within a single component to achieve the highest speeds without increasing power. The Am2903A is one of the first products to take advantage of this mixed circuit technology.

IMPROVED PROCESS CONTROL ALLOWS TIGHTER SPECS

Today's 2900 parts are carefully characterized over a wide range of voltages, temperatures, and process parameters before an AC specification is published. As manufacturing technology improves, the process is subject to smaller run-to-run variations, so that all of the product is closer to design nominal. This makes it possible to specify parameters more closely to typical without incurring large yield losses. The first product reflecting this is the Am2903.

WHAT'S GOOD FOR THE GOOSE IS GOOD FOR THE GANDER

Many new tools in production technology are emerging, primarily spurred by the emphasis on high-speed MOS memories. The same tools, such as projection masking, also provide for smaller geometries in bipolar circuits. As MOS gets faster, so does bipolar. The Am2901C obtains its speed improvement over the Am2901B through these tools.

PROCESS TECHNOLOGY TAKES A QUANTUM LEAP

Current generation LSI/VLSI bipolar devices call for state-of-the-art processing technologies. IMOX™ ion-implanted micro-oxide technology gives the Am2901C its performance improvement over the Am2901B. IMOX also generates incredible packing densities – the Am29116 has 2500 gates on a single bipolar chip!

DESIGN FOR THE FUTURE

Every Am2900 part will undergo an evolution as new technologies become practical for production. Every part type will continuously become faster. The results are easy to observe – increases in performance at no additional cost (see Figure 1).

Most existing 2900 designs can be offered in higher performance versions simply by substitution of the 2901C for the 2901B, the 2909A for the 2909, the 2903A for the 2903, and so forth. Your 2900 design won't run out of speed in a few years. Advanced Micro Devices' 2900 Family will serve tomorrow's needs as well as today's.

Figure 1. Price/Performance Improvements

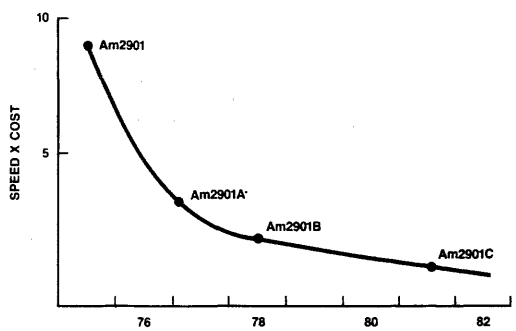

Figure 2. Bipolar Speed/Density Improvements

Am2901 FOUR-BIT MICROPROCESSOR SLICE

540 GATES
800mW
40-PIN DIP

DIE SIZE	Am2901 33,000 MILS^2	Am2901A 20,000 MILS^2	Am2901B 15,000 MILS^2	Am2901C 15,000 MILS^2
SPEED A, B G, P	80ns	65ns	50ns	37ns
TECHNOLOGY	LOW-POWER SCHOTTKY	DUAL LAYER METAL ION-IMPLANTATION	PROJECTION PRINTING	ECL INTERNAL TTL I/O IMOX
	1975	1977	1978	1981

IMOX is a trademark of Advanced Micro Devices.

© IC MASTER 1984

Am2901C 4-Bit Bipolar Microprocessor Slice

- 2-Address Architecture
  Independent simultaneous access to two working registers saves machine cycles
- 8-Function ALU
  Performs addition, two subtraction operations and five logic functions on two source operands
- Flexible Data Source Selection
  ALU data selected from five source ports
  203 source operand pairs for every ALU function
- Left/Right Shift Independent of ALU
  Add and shift operations take only one cycle
- Four Status Flags
  Carry, overflow, zero and negative
- Expandable
  Connect any number of Am2901s together for longer word lengths
- Microprogrammable
  Three groups of three bits each for source operand, ALU function and destination control
- Fast
  100ns cycle times
- 40-Pin DIP

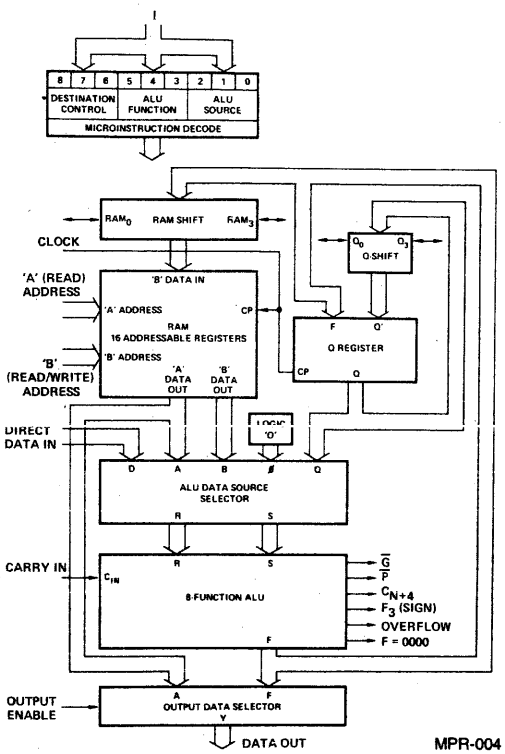

MPR-004

Am2903/Am29203 Superslice®

- Expandable Register File
  Like the Am2901B, the Am2903/Am29203 contains 16 internal working registers arranged in a 2-address architecture. But the Am2903/Am29203 includes the necessary "hooks" to expand the register file externally to any number of registers.
- Built-in Multiplication Logic
  Performing multiplication with the Am2901 requires a few external gates; these gates are contained on-chip in the Am2903/Am29203. Three special instructions are used for unsigned multiplication, twos complement multiplication and the last cycle of a twos complement multiplication.
- Built-in Division Logic
  The Am2903/Am29203 contains all logic and interconnects for execution of a non-restoring, multiple-length division with correction of the quotient.
- Built-in Parity Generation Circuitry
  The Am2903/Am29203 can supply parity across the entire ALU output for use in error detection.
- Built-in Normalization Logic
  The Am2903/Am29203 can simultaneously shift the Q Register and count in a working register. Thus, the mantissa and exponent of a floating-point number can be developed using a single microcycle per shift. Status flags indicate when the operation is complete.
- Built-in Sign Extension Circuitry
  To facilitate operation on different length twos complement numbers, the Am2903/Am29203 provides the capability to extend the sign at any slice boundary.
- BCD Arithmetic (Am29203 only)
  Automatic BCD add and subtract and conversion between binary and BCD.
- Improved Byte Handling (Am29203 only)
  Zero detection and register writing can be performed on a single byte rather than the whole word.
- Two Bidirectional Data Lines (Am29203 only)
- Fast
  174ns for 16-bit addition; Am2903A is 30% faster.
- 48-Pin DIP

© IC MASTER 1984

Am2903/Am29203 Superslice® (Cont.)

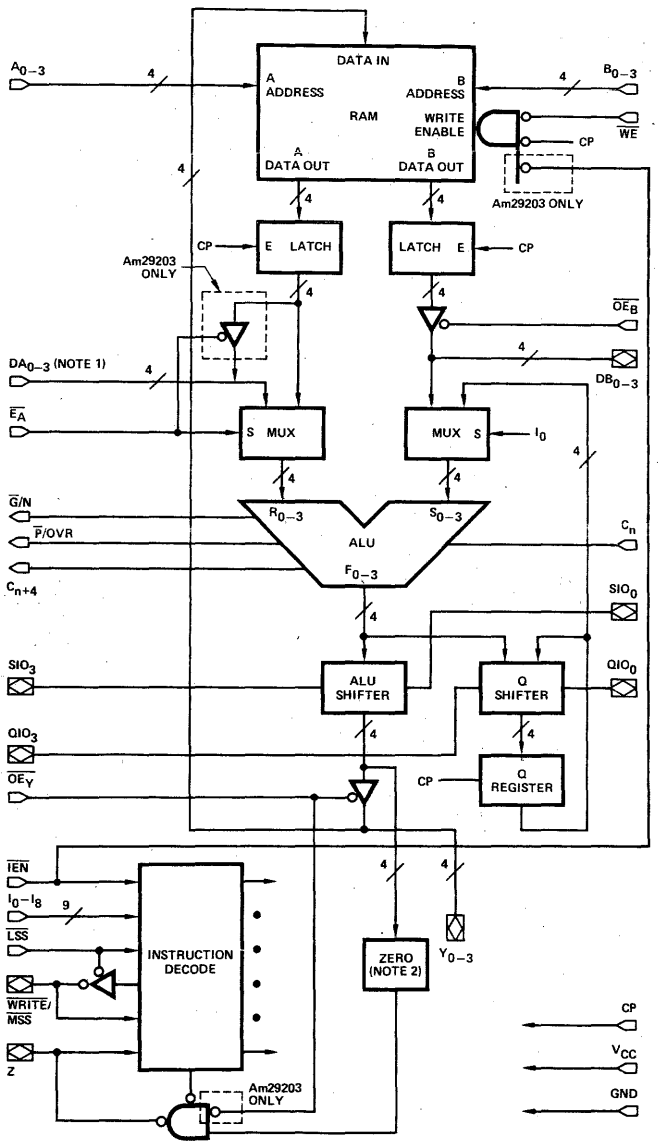

Notes: 1. DA_{0-3} is input only on Am2903, but is I/O port on Am29203.
2. On Am2903, zero logic is connected to Y, after the $\overline{OE_Y}$ buffer.

MPR-030

Am2904 Status and Shift Control Unit

- Replaces Most MSI Used around any ALU (including the Am2901B, Am2903 and MSI ALUs)
- Generates Carry-in to the ALU
  Carry signal selectable from seven different sources
- Contains Shift Linkage Multiplexers
  Connects to shift lines at the ends of an Am2901B or Am2903 array to implement single and double length arithmetic and logical shifts
  Rotates 32 different modes
- Contains Two Edge-Triggered Status Registers
  Use for foreground/background registers in controllers or as microlevel and machine level status registers
  Bit manipulating instructions provided
- Condition Code Multiplexer On-Chip
  Single cycle tests for any of 16 different conditions
  Tests performed on either of the two status registers or directly on the ALU output
- 40-Pin DIP

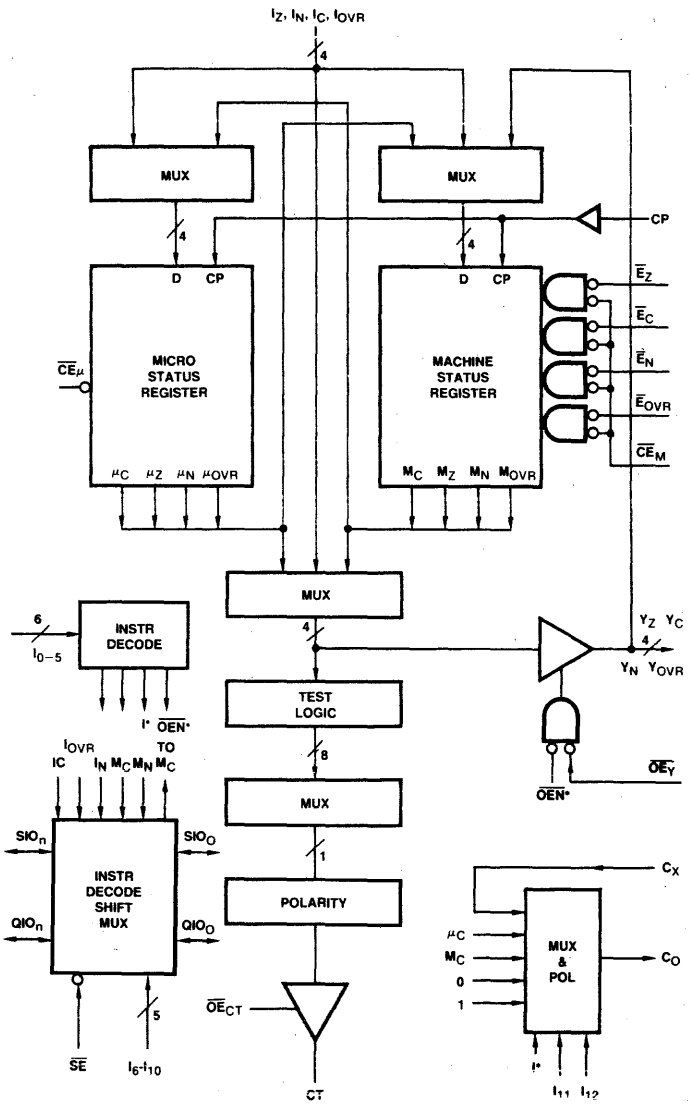

© IC MASTER 1984

BIPOLAR MICROPROCESSOR PRODUCTS

Am2905 Quad 2-Input OC Bus Transceiver (with 3-State Receiver)

- Quad High-Speed LSI Bus Transceiver
- Open-Collector Bus Driver
- 2-Port Input to D-Type Register on Driver
- Bus Driver Output Sinks 100mA at 0.8V (Max)
- Driver Clock to Bus in 21ns (Typ)
- Receiver Has Output Latch for Pipeline Operation
- 3-State Receiver Outputs Sink 12mA
- 24-Pin DIP

Am2906 Quad 2-Input OC Bus Transceiver (with Parity)

- Quad High-Speed LSI Bus Transceiver
- Open-Collector Bus Driver
- 2-Port Input to D-Type Register on Driver
- Bus Driver Output Sinks 100mA at 0.8V (Max)
- Internal Odd 4-Bit Parity Checker/Generator
- Driver Clock to Bus in 21ns (Typ)
- Receiver Has Output Latch for Pipeline Operation
- Receiver Outputs Sink 12mA
- 24-Pin DIP

Am2905*

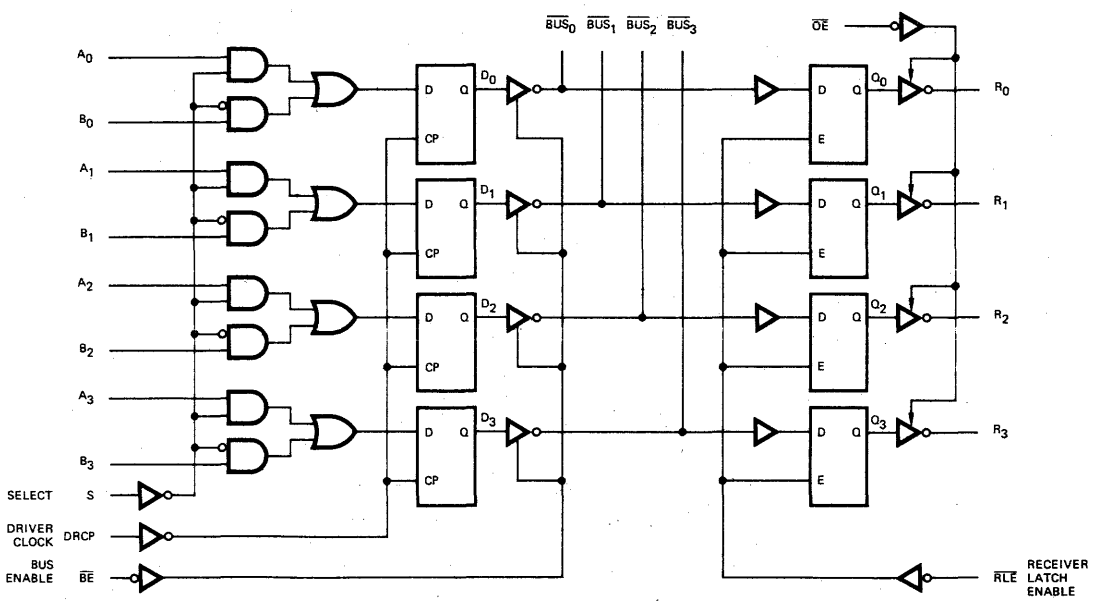

MPR-065

*Am2906 logic diagram is similar to Am2905 except the $\overline{OE}$ input is replaced with a parity output like Am2907.

© IC MASTER 1984

Am2907/Am2908 Quad Bus Transceivers (with Interface Logic)

- Quad High-Speed LSI Bus Transceiver
- Open-Collector Bus Driver
- D-Type Register on Driver
- Bus Driver Output Sinks 100mA at 0.8V (Max)
- Internal Odd 4-Bit Parity Checker/Generator
- Input Receiver Threshold Voltage
  2.0V for Am2907
  1.5V for Am2908 (DEC Q or LSI-11 Bus Compatible)
- Driver Clock to Bus in 21ns (Typ)
- Receiver Has Output Latch for Pipeline Operation
- 3-State Receiver Outputs Sink 12mA
- 20-Pin DIP

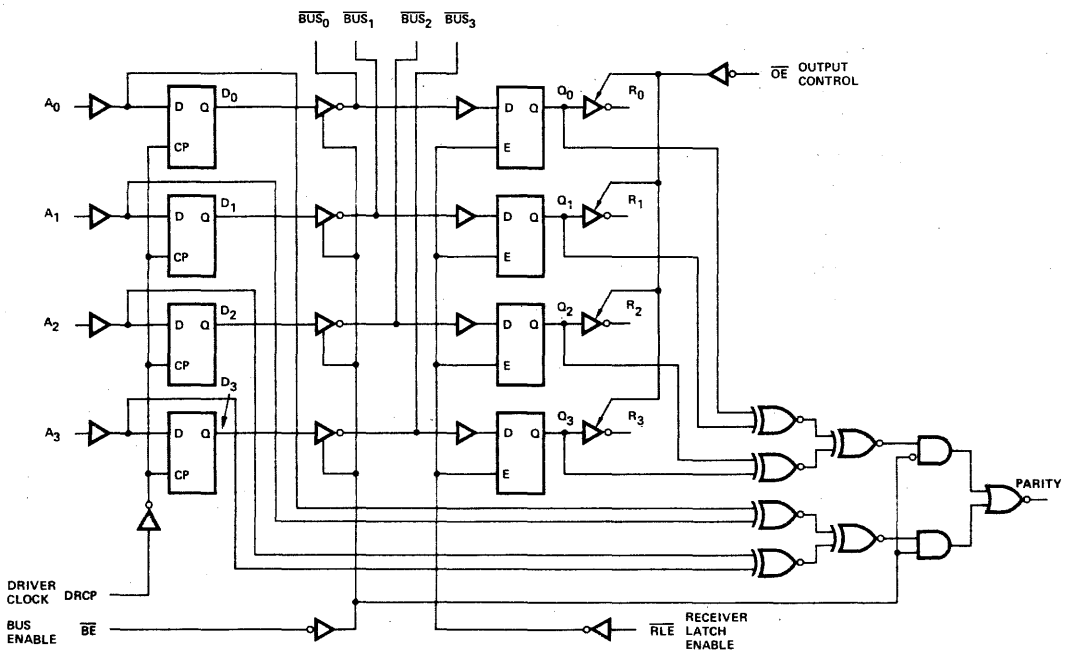

MPR-085

© IC MASTER 1984

BIPOLAR MICROPROCESSOR PRODUCTS

Am2909/Am2911, Am2909A/Am2911A
4-Bit Microprogram Sequencers

- 4-Bit Slice Cascadable to any Number of Microwords
- Internal Address Register
- Branch Input for N-Way Branches
- Cascadable 4-Bit Microprogram Counter
- 4 x 4 File with Stack Pointer and Push/Pop Control for Nesting Microsubroutines
- Zero Input for Returning to the Zero Microcode Word
- Individual OR Input for each Bit for Branching to Higher Microinstructions (Am2909/Am2909A only)
- 3-State Outputs
- All Internal Registers Change State on the LOW-to-HIGH transition of the Clock
- High-Speed Versions (Am2909A and Am2911A) are Plug-in Replacements for Am2909 and Am2911 Critical Path Speeds Improved by about 25%
- 177ns (Max) for Conditional Jump Sequence (includes delay through PROM and registers)
- Am2909/Am2909A in 28-Pin DIP
- Am2911/Am2911A in 20-Pin DIP

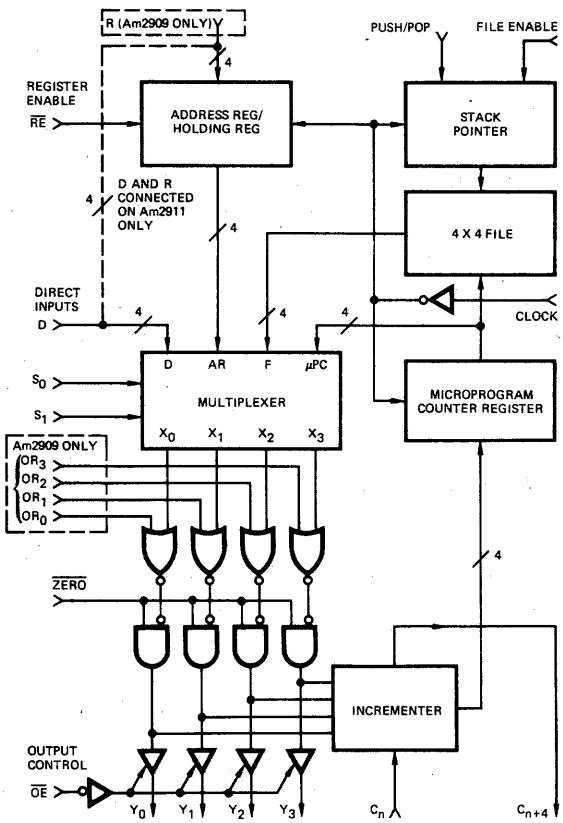

MPR-093

© IC MASTER 1984

Am2910 12-Bit Microprogram Controller

- 12 Bits Wide
  Address up to 4096 words of microcode with one chip
  All internal elements a full 12 bits wide
- Internal Loop Counter
  Presettable 12-bit down-counter for repeating instructions and counting loop iterations
- Four Address Sources
  Microprogram Address can be selected from microprogram counter, branch address bus, 5-level push/pop stack or internal holding register
- 16 Powerful Microinstructions
  Executes 16 sequence control instructions, most conditional on external condition input and/or state of internal loop counter
- Output Enable Controls for Three Branch-Address Sources
  Built-in decoder function enables external devices onto branch address bus, eliminates external decoder
- All Registers Positive Edge-Triggered
  Simplifies timing problems
  Eliminates long set-up times
- Fast Control from Condition Input
  Delay from condition code input to address output 21ns (Typ)
- 166ns (Max) for Conditional Jump Sequence (includes delay through PROM and registers)
- 40-Pin DIP

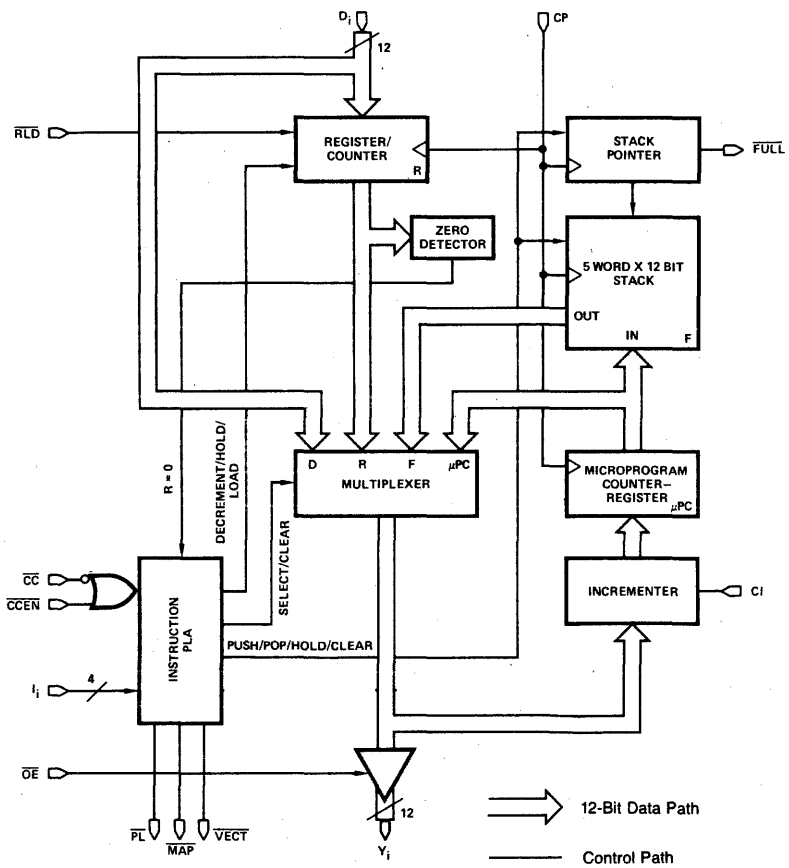

MPR-106

© IC MASTER 1984

BIPOLAR MICROPROCESSOR PRODUCTS

Am2912 Quad Bus Transceiver

- Input to Bus Is Inverting
- Quad High-Speed Open-Collector Bus Transceiver
- Driver Outputs Sink 100mA at 0.8V (Max)
- Bus Compatible with Am2905, Am2906, Am2907
- Enable to Bus in 14ns (Typ)
- PNP Inputs to Reduce Input Loading
- 16-Pin DIP

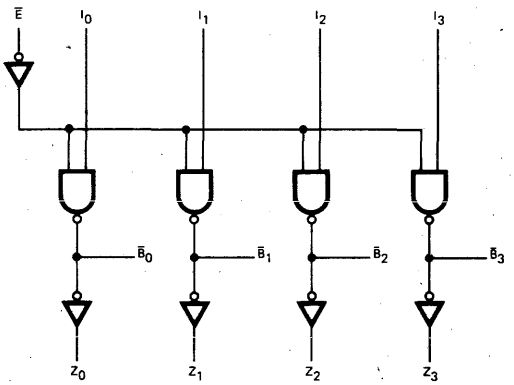

BLI-061

Am2913 Priority Interrupt Expander

- Encodes Eight Lines to 3-Line Binary
- Expands Use of Am2914
- Cascadable
- Input to Output in 17ns (Typ)
- Gated 3-State Output
- 20-Pin DIP

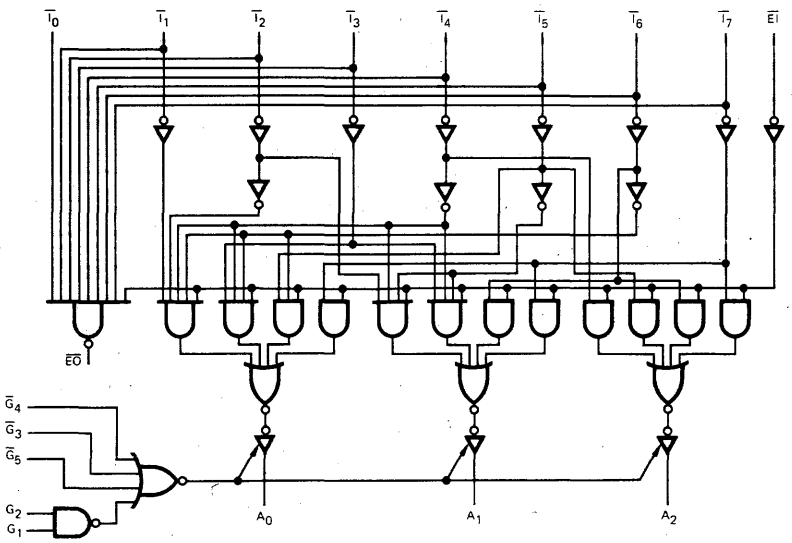

MPR-119

© IC MASTER 1984

Am2914 Vectored Priority Interrupt Controller

- Accepts Eight Interrupt Inputs
  Pulse or level interrupts
  Interrupts stored internally
- Built-in Mask Register
  Six different operations performed on mask register
- Built-in Status Register
  Holds code for lowest allowed interrupt
- Vectored Output
  Output is binary code for highest priority unmasked interrupt
- Expandable
  Any number of Am2914s can be stacked for large interrupt systems
- Microprogrammable
  Executes 16 different microinstructions
  Instruction enable pin aids in vertical microprogramming
- High-Speed Operation
  Delay from interrupt clocked into interrupt register to interrupt request output 97ns (Typ)
- 40-Pin DIP

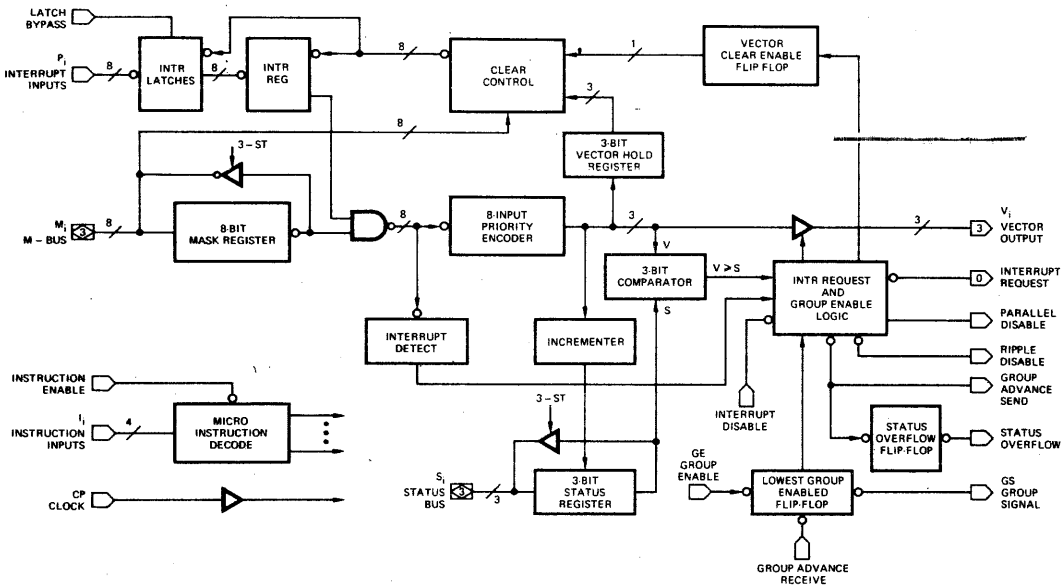

MPR-124

© IC MASTER 1984

BIPOLAR MICROPROCESSOR PRODUCTS

Am2915A Quad 3-State Bus Transceiver (with Interface Logic)

- Quad High-Speed LSI Bus Transceiver
- 3-State Bus Driver
- 2-Port Input to D-Type Register on Driver
- Bus Driver Output Sinks 48mA at 0.5V (Max)
- Receiver Has Output Latch for Pipeline Operation
- Driver Clock to Bus in 21ns (Typ)
- 3-State Receiver Outputs Sink 12mA
- V_{OH} = 3.5V (Min) for Direct MOS Microprocessor Interface
- 24-Pin DIP

Am2916A Quad 3-State Bus Transceiver (with Interface Logic)

- Quad High-Speed LSI Bus Transceiver
- 3-State Bus Driver
- 2-Port Input to D-Type Register on Driver
- Bus Driver Output Sinks 48mA at 0.5V (Max)
- Internal Odd 4-Bit Parity Checker/Generator
- Receiver Has Output Latch for Pipeline Operation
- Driver Clock to Bus in 21ns (Typ)
- Receiver Outputs Sink 12mA
- V_{OH} = 3.5V (Min) for Direct MOS Microprocessor Interface
- 24-Pin DIP

Am2915A*

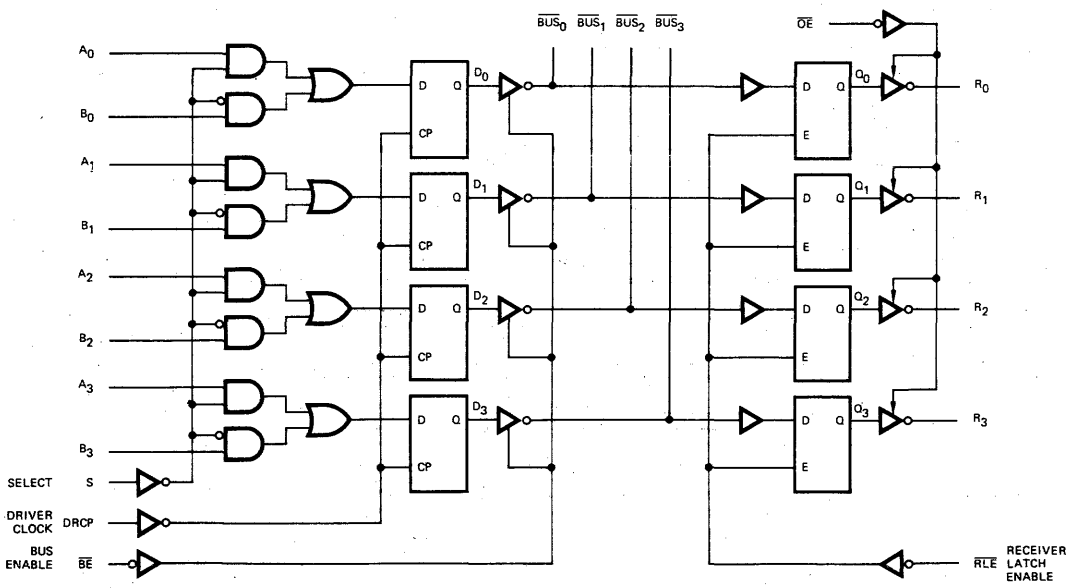

*Am2916A logic diagram is similar to Am2915A except that $\overline{OE}$ input is replaced by parity output.

MPR-161

© IC MASTER 1984

Am2917A Quad 3-State Bus Transceiver (with Interface Logic)

- Quad High-Speed LSI Bus Transceiver
- 3-State Bus Driver
- D-Type Register on Driver
- Bus Driver Output Sinks 48mA at 0.5V (Max)
- Internal Odd 4-Bit Parity Checker/Generator
- Receiver Has Output Latch for Pipeline Operation
- Driver Clock to Bus in 21ns (Typ)
- 3-State Receiver Outputs Sink 12mA
- V_{OH} = 3.5V (Min) for Direct MOS Microprocessor Interface
- 20-Pin DIP

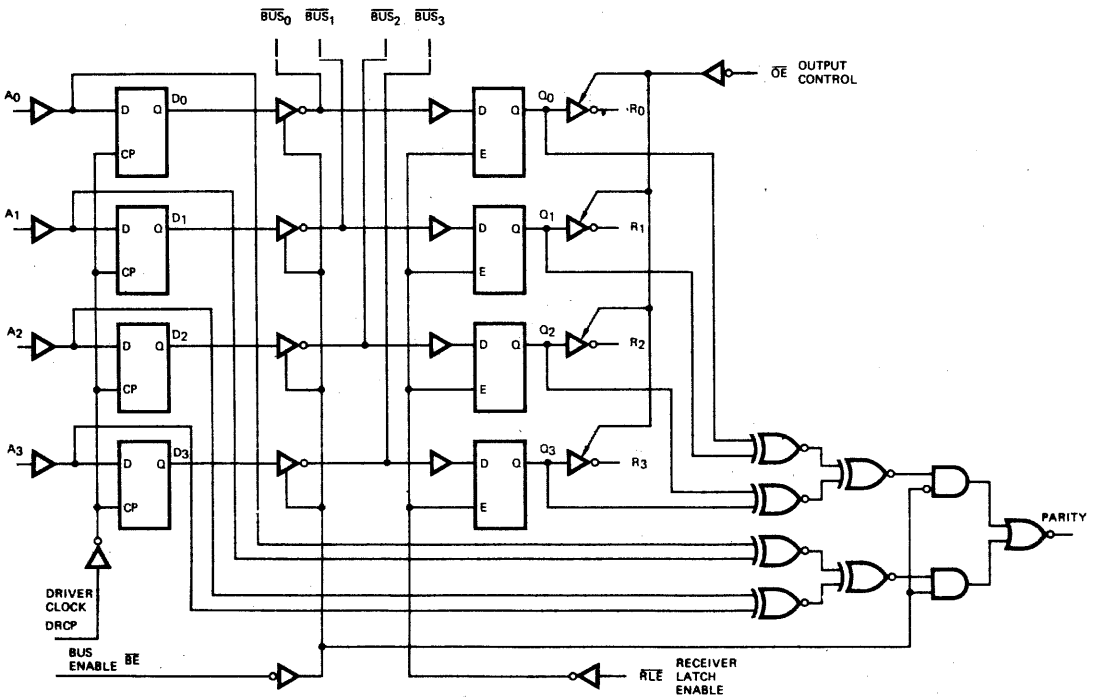

MPR-177

© IC MASTER 1984

BIPOLAR MICROPROCESSOR PRODUCTS

Am2918/Am29LS18 Quad D Registers (with Standard and 3-State Outputs)

- Four D-Type Flip-Flops
- Four Standard Totem-Pole Outputs
- Four 3-State Outputs
- Clock to Output Time (Typ)
  8.5ns for Am2918
  18ns for Am29LS18
- 16-Pin DIP

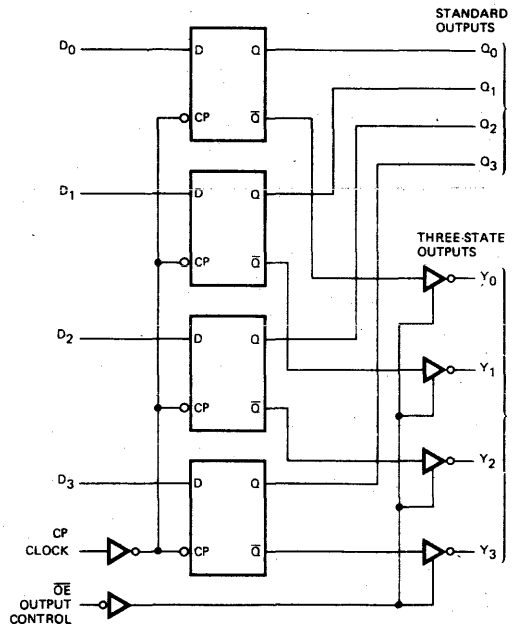

MPR-183

Am2919 Quad Register (with Dual 3-State Outputs)

- Two Sets of 3-State Outputs
- Four D-Type Flip-Flops
- Polarity Control on One Set of Outputs
- Buffered Common Clock Enable
- Buffered Common Asynchronous Clear
- Separate Buffered Common Output Enable for each Set of Outputs
- Clock to Output in 22ns (Typ)
- 20-Pin DIP

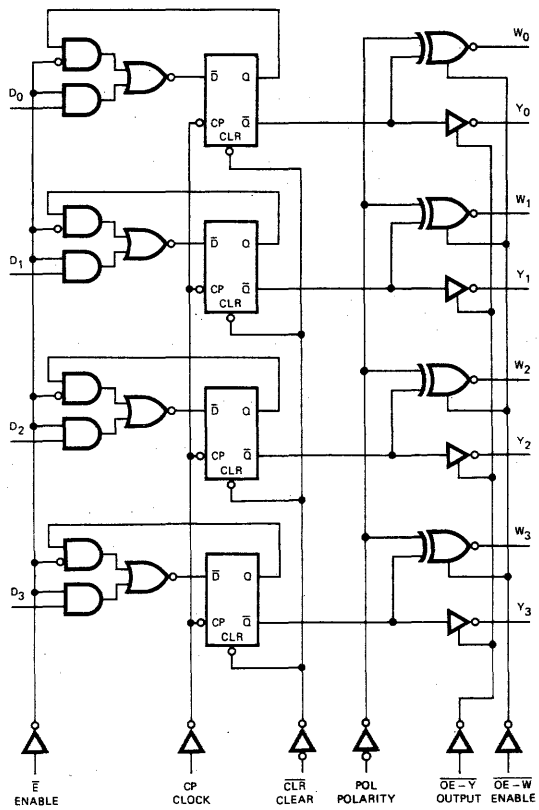

MPR-196

© IC MASTER 1984

Am2920 Octal D-Type Flip-Flop
(with Clear, Clock Enable and 3-State Control)

- Buffered Common Clock Enable Input
- Buffered Common Asynchronous Clear Input
- 3-State Outputs
- 8-Bit High-Speed Parallel Register with Positive Edge-Triggered, D-Type Flip-Flops
- Clock to Output in 24ns (Typ)
- 22-Pin DIP

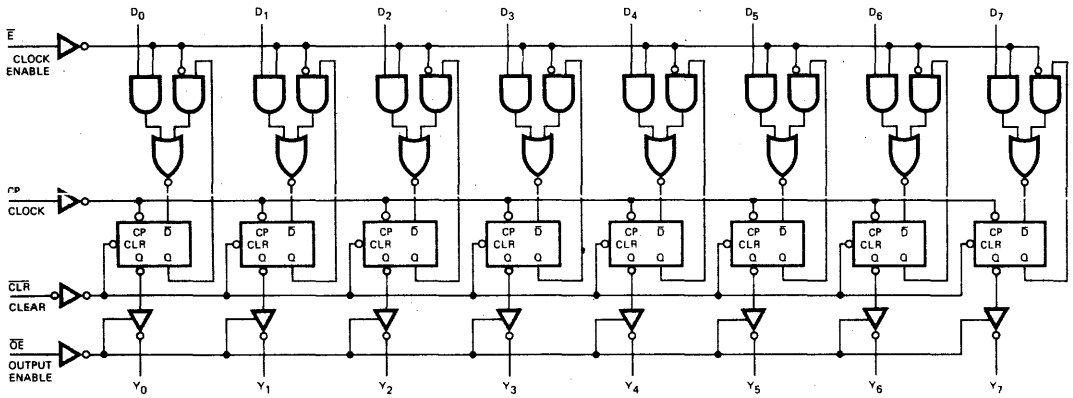

MPR-201

Am2921 One-of-Eight Decoder
(with 3-State Outputs and Polarity Control)

- 3-State Decoder Outputs
- Buffered Common Output Polarity Control
- Inverting and Non-inverting Enable Inputs
- Input to Output in 20ns (Typ)
- 20-Pin DIP

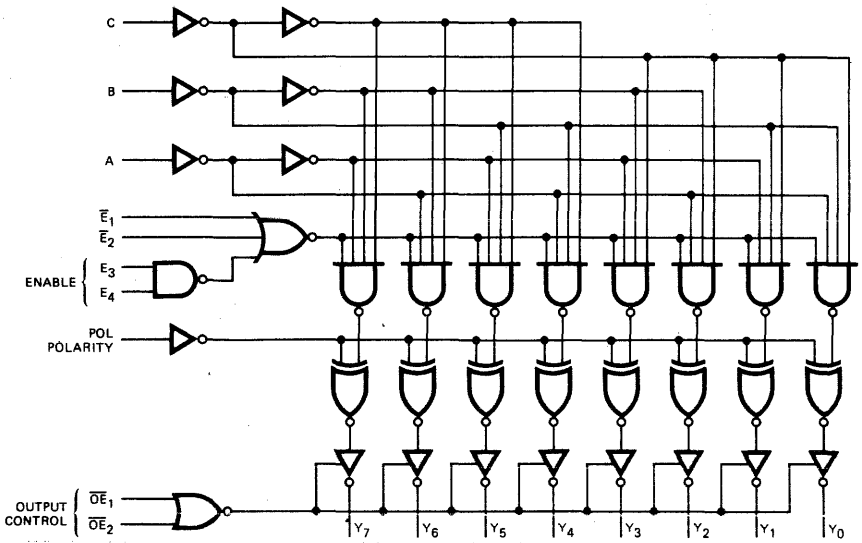

MPR-207

© IC MASTER 1984

BIPOLAR MICROPROCESSOR PRODUCTS

Am2922 8-Input Multiplexer (with Control Register)

- High-Speed 8-Input Multiplexer
- On-Chip Multiplexer Select and Polarity Control Register
- Output Polarity Control for Inverting or Non-inverting Output
- Common Register Enable
- Asynchronous Register Clear
- 3-State Output for Expansion
- Clock to Output in 21ns (Typ)
- 20-Pin DIP

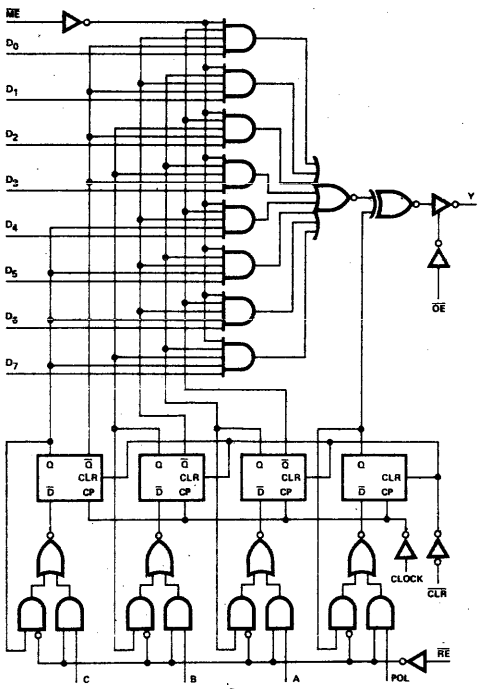

MPR-213

Am2923 8-Input Multiplexer

- Switches One of Eight Inputs to Two Complementary Outputs
- Input to Output in 13ns (Typ)
- 3-State Output for Bus Organized Systems
- 16-Pin DIP

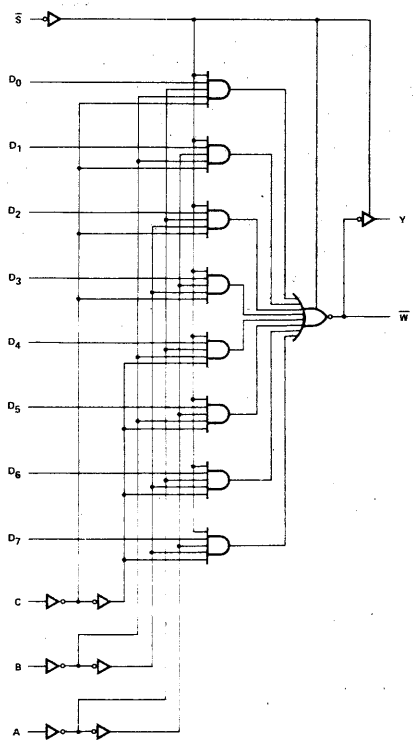

BLI-069

© IC MASTER 1984

Am2924 3-Line to 8-Line Decoder/Demultiplexer

- Inverting and Non-inverting Enable Inputs
- Select to Output in 8.0ns (Typ)
- 16-Pin DIP

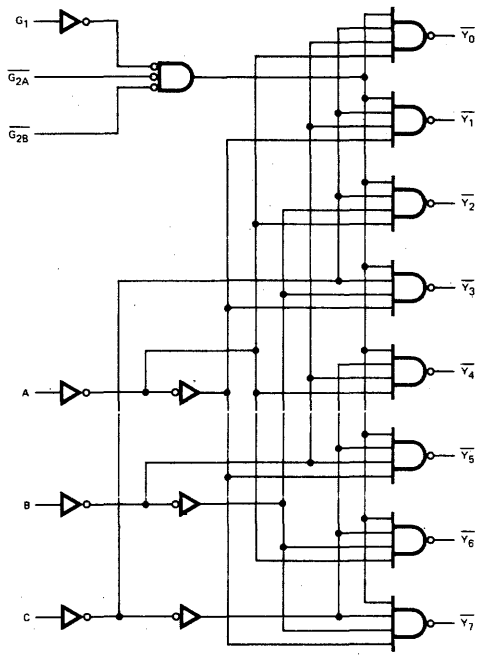

BLI-075

Am2925 System Clock Generator and Driver

- Single-Chip Clock Generator and Driver
- Four Different Clock Output Waveforms for Am2900 and Other Bipolar and MOS Systems
- Crystal Controlled for Stable System Operation
- Oscillator to 31MHz
  Oscillator output for external system timing
- Clock Halt, Single-Step and Wait Controls
- Variable Cycle Lengths
  One of eight different cycle lengths can be micro-programmed to boost CPU throughput up to 25%
- Slim 0.3" 24-Pin DIP

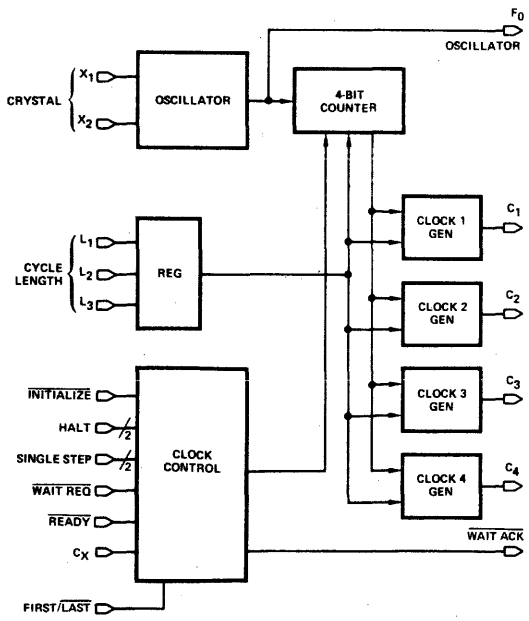

MPR-217

© IC MASTER 1984

BIPOLAR MICROPROCESSOR PRODUCTS

Am2926/Am2929 Schottky 3-State Quad Bus Driver/Receiver

- 48mA Driver Sink Current
- 3-State Outputs on Driver and Receiver
- PNP Inputs
- Am2926 Has Inverting Outputs
- Am2929 Has Non-inverting Outputs
- Driver/Receiver Propagation Delay (Typ)
  10ns for Am2926
  13ns for Am2929
- 16-Pin DIP

Am2926*

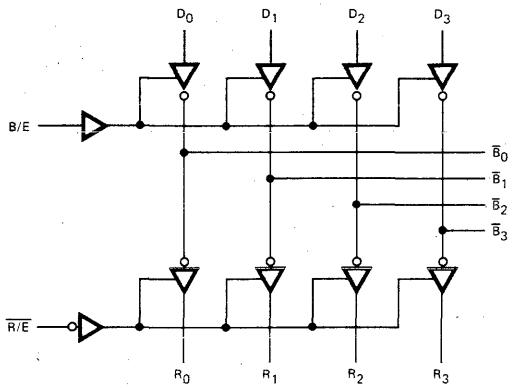

*Outputs B_0-B_3 are not inverted for Am2929.

BLI-080

Am2927/Am2928 Quad 3-State Bus Transceivers (with Clock Enable)

- Quad High-Speed LSI Bus Transceivers
- 3-State Bus Driver and Receiver Outputs
- D-Type Register on Drivers
- Latched Output on Am2927
- Registered Output on Am2928
- Output Data to Input Wraparound Gating
- Input Register to Output Transfer Gating with or without Driving Data Bus
- Clock Enabled Registers
- Bus Driver Outputs Sink 48mA at 0.5V (Max)
- 3-State Receiver Outputs Sink 20mA at 0.5V (Max)
- V_{OH} = 3.5V (Min) for Direct MOS Microprocessor Interface
- 20-Pin DIP

Am2927

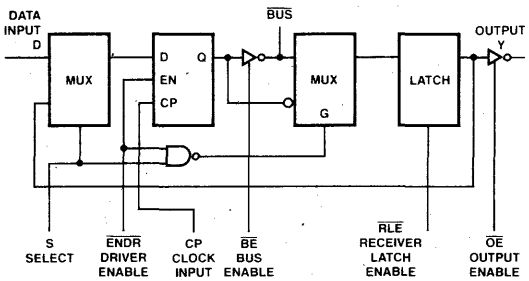

Am2928

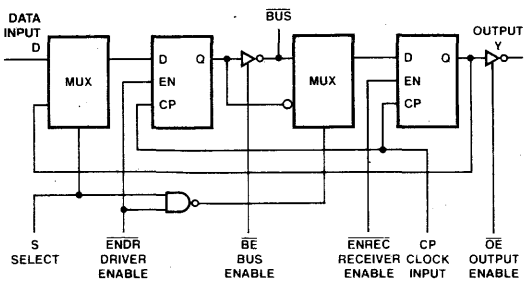

BLI-088

© IC MASTER 1984

Am2940 DMA Address Generator

- DMA Address Generation
  Generates memory address, word count and DONE signal for DMA transfer operation
- Expandable 8-Bit Slice
  Any number of Am2940s can be cascaded to form larger memory addresses
  Three devices address 16 megawords
- Repeat Data Transfer Capability
  Initial memory address and word count saved so data transfer can be repeated
- Programmable Control Modes
  Provides four types of DMA transfer control plus memory address increment/decrement
- 24mA Output Current Sink Capability
- Microprogrammable
  Executes eight different instructions
- 109ns (Max) Cycle Time for 16-Bit Configuration
  Allows up to nine million words/second DMA
- 28-Pin DIP

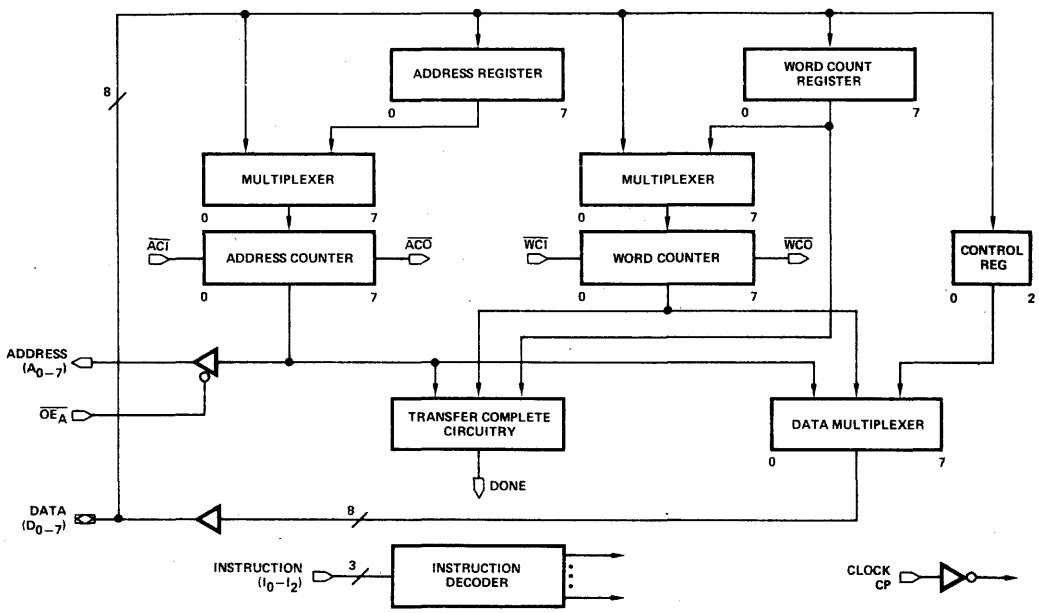

MPR-226

© IC MASTER 1984

BIPOLAR MICROPROCESSOR PRODUCTS

Am2942 Programmable Timer/Counter, DMA Address Generator

- 22-Pin Version of Am2940
  Provides multiplexed address and data lines plus additional instruction input and instruction enable pins
- Used as DMA Address Generator or Programmable Timer Counter
- Executes 16 Instructions
  Eight DMA instructions
  Eight Timer/Counter instructions
- Provides Two Independent Programmable 8-Bit Up/Down Counters
  Counters can be cascaded to form single-chip 16-bit up/down counter
- Reinitialize Capability
  Counters reinitialized from on-chip registers
- Expandable 8-Bit Slice
  Any number of Am2942s can be cascaded
  Three devices provide a 48-bit counter
- Programmable Control Modes
  Four types of control
- 24mA Output Current Sink Capability
- 109ns (Max) Cycle Time for 16-Bit Configuration
- 22-Pin DIP

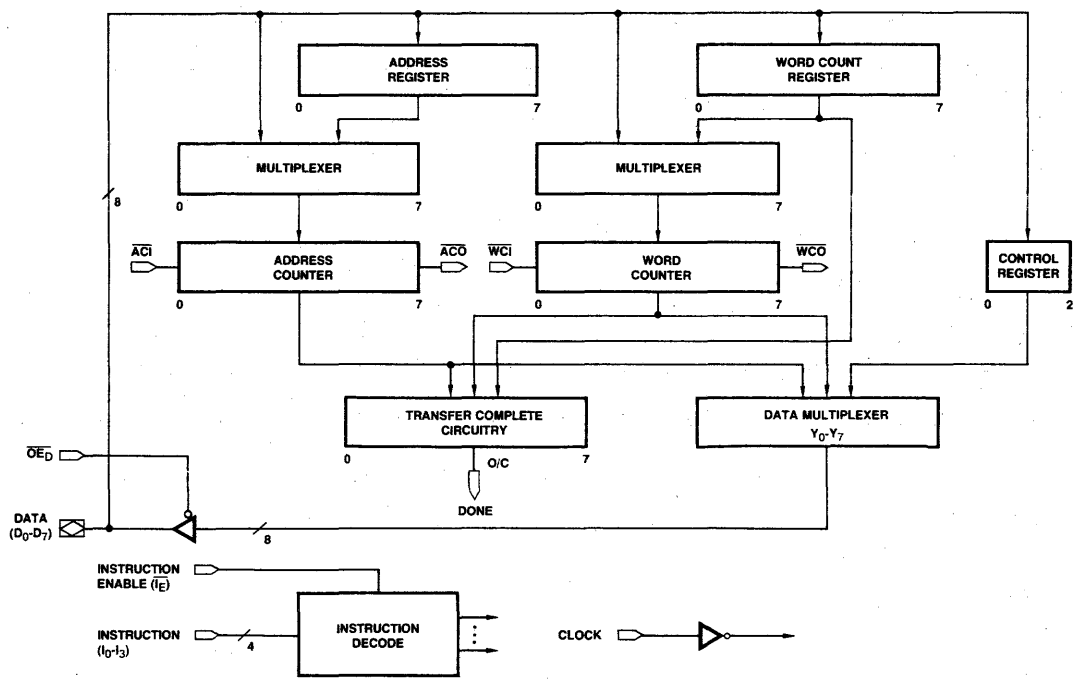

MPR-231

© IC MASTER 1984

Am2946/Am2947 Octal 3-State Bidirectional Bus Transceivers

- 8-Bit Bidirectional Data Flow Reduces System Package Count
- 3-State Inputs/Outputs for Bus-Oriented System Interface
- PNP Inputs Reduce Input Loading
- $V_{OH} = V_{CC} - 1.15V$ for TTL, MOS, CMOS Interface
- 48mA, 300pF Bus Drive Capability
- Am2946 Has Inverting Transceivers
- Am2947 Has Non-inverting Transceivers
- Transmit/$\overline{\text{Receive}}$ and Chip Disable Simplify Control Logic
- Low-Power
  8.0mA per bidirectional bit
- Bus Port Stays in High-Impedance State during Power Up/Down
- A Port to B Port Delay Time – 11ns (Typ)
- 20-Pin DIP

Am2946*

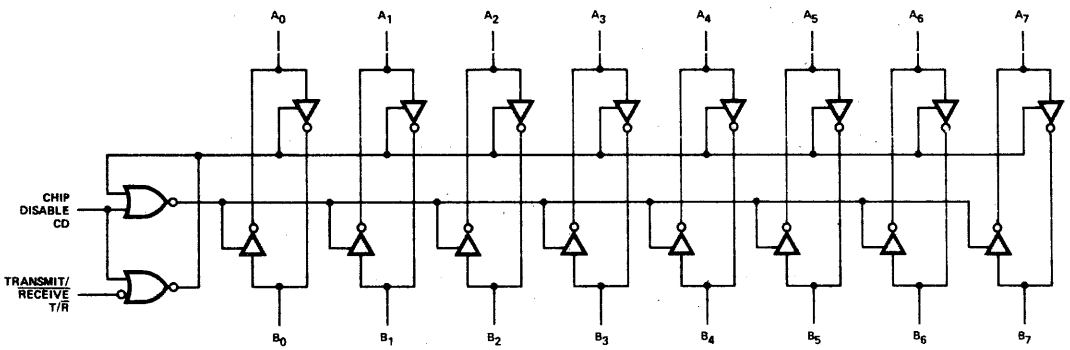

*Am2947 has non-inverting transceivers. BLI-101

Am2948/Am2949 Octal 3-State Bidirectional Bus Transceivers

- 8-Bit Bidirectional Data Flow Reduces System Package Count
- 3-State Inputs/Outputs for Bus-Oriented System Interface
- PNP Inputs Reduce Input Loading
- $V_{OH} = V_{CC} - 1.15V$ for TTL, MOS, CMOS Interface
- 48mA, 300pF Bus Drive Capability
- Am2948 Has Inverting Transceivers
- Am2949 Has Non-inverting Transceivers
- Separate $\overline{\text{Transmit}}$ and $\overline{\text{Receive}}$ Enables
- Low-Power
  8.0mA per bidirectional bit
- Bus Port Stays in High-Impedance State during Power Up/Down
- 20-Pin DIP

Am2949*

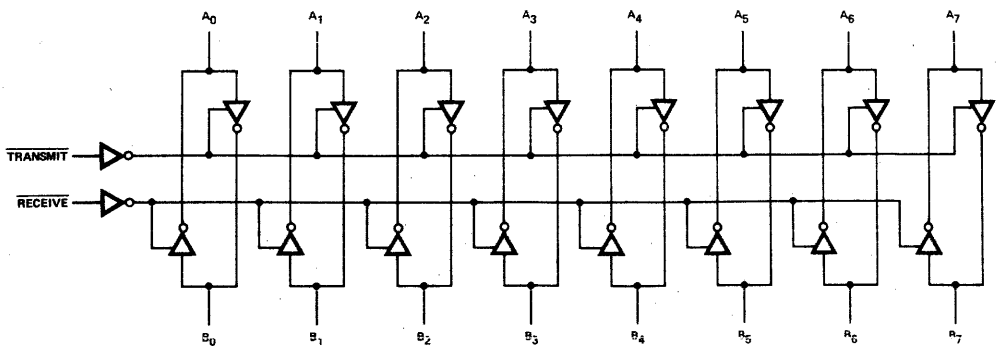

*Am2948 has inverting transceivers. BLI-107

© IC MASTER 1984

Am2950/Am2951 8-Bit Bidirectional I/O Ports

- 8-Bit, Bidirectional I/O Port with Handshake
  Two 8-bit, back-to-back registers store data moving in both directions between two bidirectional busses
- Register Full/Empty
  On-chip flag flip-flops provide data transfer handshaking signals
- Separate Clock, Clock Enable and 3-State Output Enable for each Register
- Separate, Edge-Sensitive Clear Control for each Flag Flip-Flop
- Inverting and Non-inverting Versions
  Am2950 provides non-inverting data outputs
  Am2951 provides inverting data outputs
- 24mA Output Current Sink Capability
- 20ns Clock to Flag, 27ns (Max) for Output Enable
  Allows up to 8 million words/second data transfer rate
- 28-Pin DIP

Am2950*

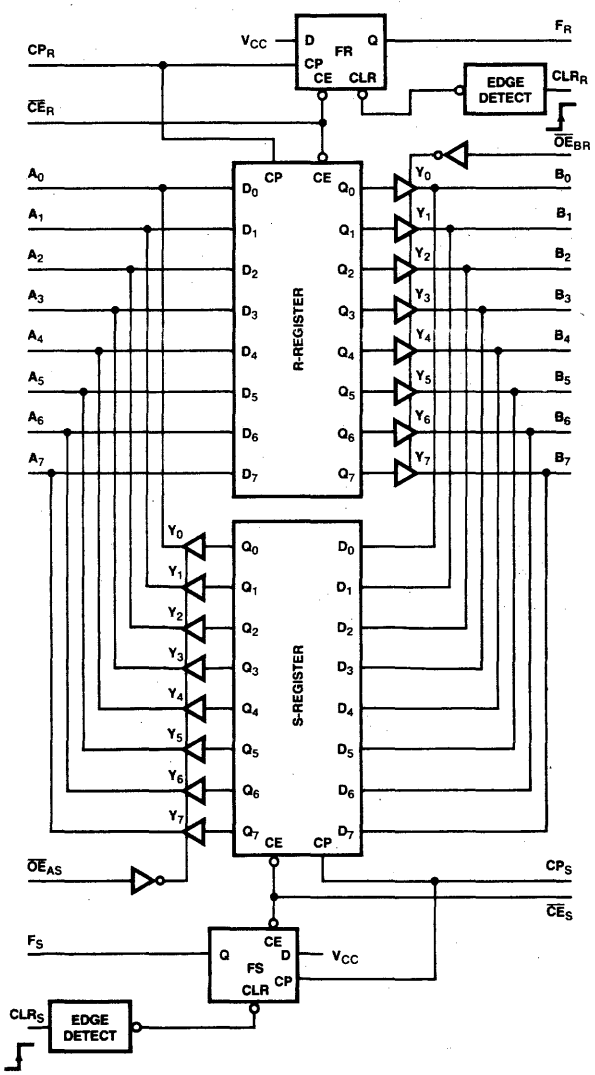

*Outputs B_0-B_7 are inverted on the Am2951.

MPR-573

© IC MASTER 1984

Am2954/Am2955 Octal Registers (with 3-State Outputs)

- 8-Bit High-Speed Parallel Registers
- Am2954 Has Non-inverting Inputs
- Am2955 Has Inverting Inputs
- Positive Edge-Triggered D-Type Flip-Flops
- Buffered Common 3-State Control and Clock
- V_{OL} = 0.5V (Max) at I_{OL} = 32mA
- Clock to Output 11ns (Typ)
- 20-Pin DIP

Am2954*

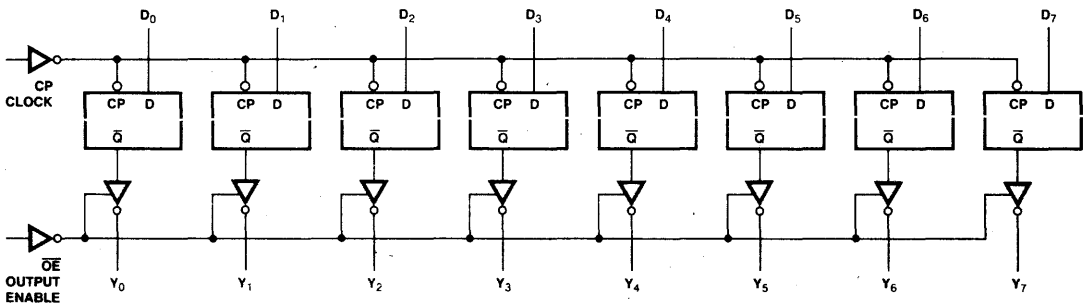

*Inputs D_0 through D_7 are inverted on the Am2955.

BLI-110

Am2956/Am2957 Octal Latches (with 3-State Outputs)

- Eight Latches in a Single Package
- Am2956 Has Non-inverting Outputs
- Am2957 Has Inverting Outputs
- V_{OL} = 0.5V (Max) at I_{OL} = 32mA
- 3-State Outputs for Bus-Oriented System Interface
- Hysteresis on Latch Enable Input for Improved Noise Margin
- Clock to Output 12ns (Typ)
- 20-Pin DIP

Am2956*

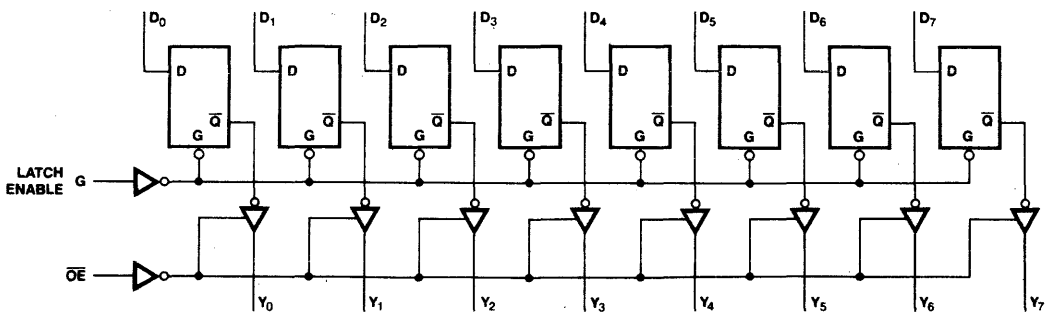

*Inputs D_0 through D_7 are inverted on the Am2957.

MPR-360

© IC MASTER 1984

BIPOLAR MICROPROCESSOR PRODUCTS

Am2958/Am2959 Octal Buffers/Line Drivers/Line Receivers (with 3-State Outputs)

- 3-State Outputs Drive Bus Lines Directly
- Hysteresis at Inputs Improve Noise Margin
- PNP Inputs Reduce dc Loading on Bus Lines
- V_{OL} = 0.55V
  at I_{OL} = 65mA for commercial product
  at I_{OL} = 48mA for military product
- Data-to-Output Propagation Delay
  Am2958 Inverting – 4.5ns (Max)
  Am2959 Non-inverting – 6.0ns (Max)
- Enable-to-Output 15ns (Max)
- 20-Pin DIP

Am2958*

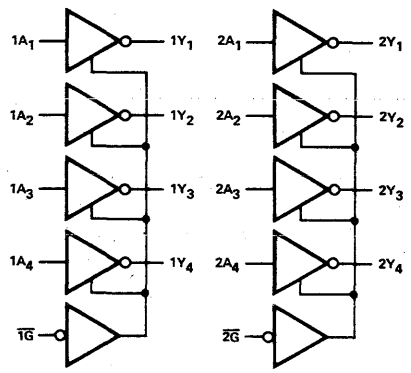

*Outputs Y_1 through Y_4 are not inverted on the Am2959.

BLI-115

Am29112 Interruptable 8-Bit Microprogram Sequencer

- **Fast –**
  The Am29112 is designed to operate in 10MHz microprogrammed systems.
- **Expandable –**
  A single Am29112 is 8 bits wide and addresses 256 words of microprogram memory. Two Am29112's may be cascaded to directly address up to 64K of microprogram memory.
- **Deep stack –**
  A 33 deep on-chip stack is used for subroutine linkage, interrupt handling and loop control.
- **Interruptible at the microprogram level –**
  Two kinds of interrupts: maskable and unmaskable.
- **Powerful loop control –**
  Features an 8-bit counter for loop control. When two Am29112s are cascaded, the counters can act as a single 16-bit counter or two independent 8-bit counters.
- **Powerful addressing modes –**
  Features direct, multiway, multiway relative and program counter relative addressing.
- **Support for writable control store**
- **Hold feature –**
  A hold pin facilitates multiple sequencer implementations.
- **48-pin Hermetic DIP**

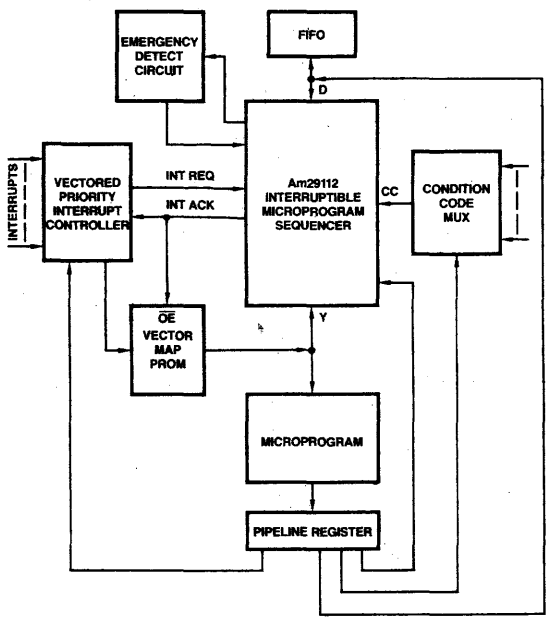

© IC MASTER 1984

Am29116 16-Bit Bipolar Microprocessor

- Designed for Controller Applications
  Instruction set designed for high performance peripheral controllers, communications controllers, industrial controllers and digital modems . . . but general purpose too.
  Excellent solution for applications requiring speed and bit-manipulation power
- Fast
  Supports 100ns (Max) microcycle time for all instructions
  Allows a 10MHz clock rate
- Powerful Instruction Set
  All instructions executable in single cycle on full 16-bit word or on 8-bit byte:

Add, Subtract	Rotate and Merge
n-Bit Rotate	Rotate and Compare
Shift-Up/Shift-Down	CRC Generation
Set-Bit/Reset-Bit	Priority Encode
Add/Subtract 2^n	

- Powerful Data Manipulation
  Full 16-bit data path
  32 registers on-chip
  Direct data input for immediate mode instructions
- 52-Pin DIP

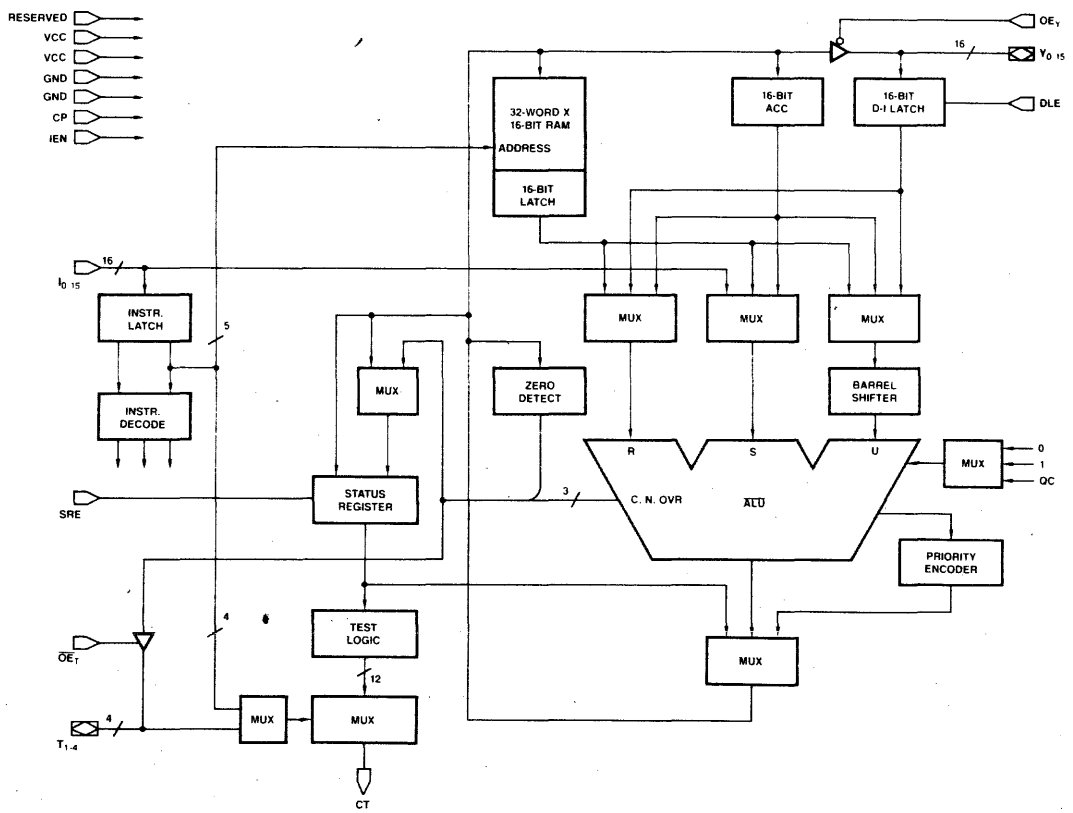

MPR-740

© IC MASTER 1984

BIPOLAR MICROPROCESSOR PRODUCTS

Am29705 16-Word by 4-Bit 2-Port RAM

- 16 Word x 4-Bit 2-Port RAM
- Two Output Ports
  Each with separate output control
  Separate 4-bit latches on each
- Data Output Non-inverting with Respect to Data Input
- Chip Select and Write Enable Inputs for Ease in Cascading
- 53ns (Max) Access Time
- 28-Pin DIP

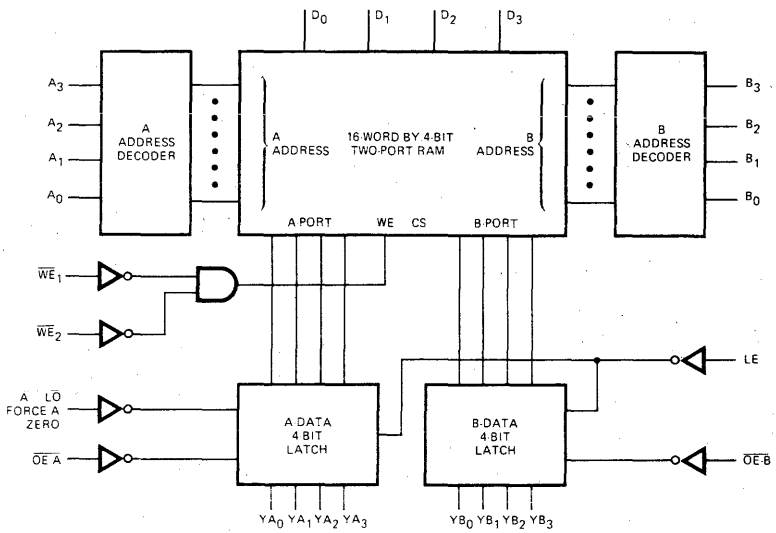

MPR-251

Am29707 16-Word by 4-Bit 2-Port RAM

- 16-Word by 4-Bit 2-Port RAM
- Use to Extend the Directly Accessible Register File of the Am29203 Microprocessor Slice
- Separate 4-Bit Latches on each Output Port
- Data Output Non-inverting with Respect to Data Input
- Chip Select and Write Enable Inputs for Ease in Cascading
- 28-Pin DIP

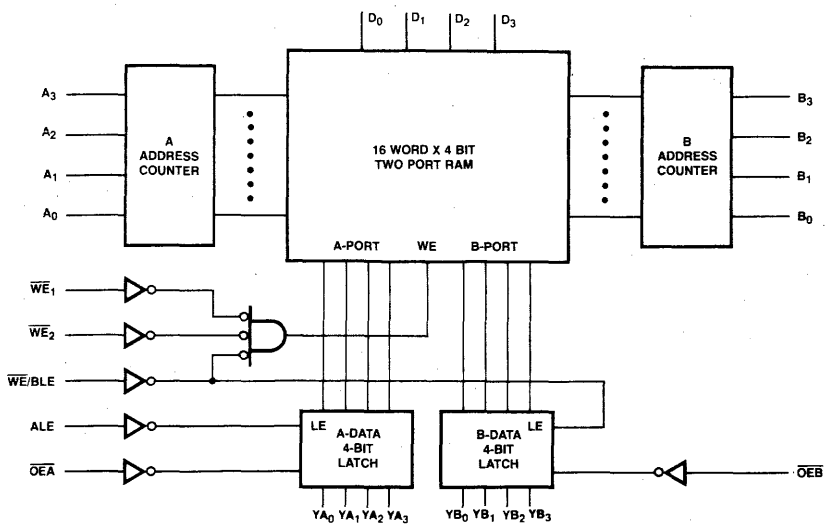

MPR-757

© IC MASTER 1984

Am29803A 16-Way Branch Control Unit

- 16 Separate Instructions
  2, 4, 8 or 16-way branch in one microprogram execution cycle
- Four Individual Test Inputs
- Four Individual Outputs for Driving the Four OR Inputs on Am2909 Microprogram Sequencer
- Provides Maximum Branch Capability in a Microprogram Control Unit Using Am2909
- 16-Pin DIP

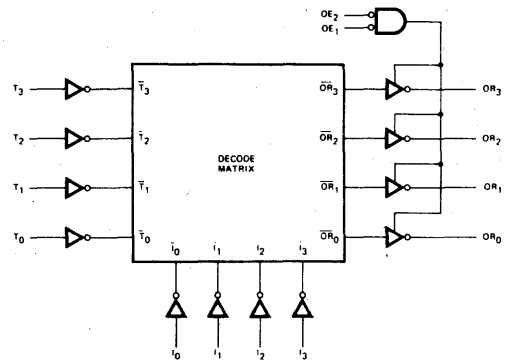

MPR-309

Am29811A Next Address Control Unit

- Next Address Control Unit for Am2911 Microprogram Sequencer
- 16 Next Address Instructions
- Test Input for Conditional Instructions
- Separate Outputs to Control Am2911
- Independent Event Counter
- Mapping PROM/Branch Address Interface
- 16-Pin DIP

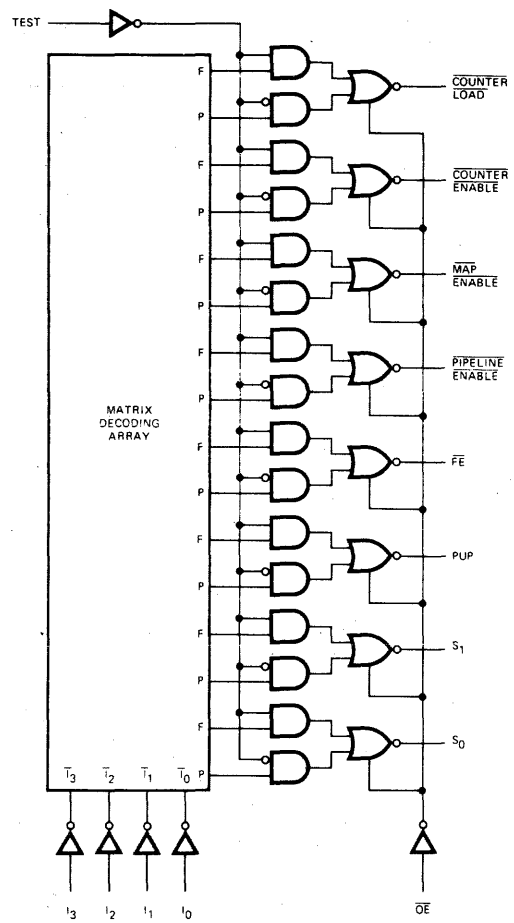

MPR-314

© IC MASTER 1984

Advanced Micro Devices

BIPOLAR MICROPROCESSOR PRODUCTS

OTHER LOGIC DEVICES FOR HIGH-SPEED PROCESSOR APPLICATIONS

Operators	Low-Power Schottky	Schottky
4-Bit, 4-Way Shifter		25S10
4-Bit ALU, Function Generator (with carry out, overflow)	25LS2517	
4-Bit ALU, Function Generator (with generate, propagate)	25LS381*	
8-Bit, Equal-to Comparator	25LS2521	
Priority Encoder (with 3-state outputs)	25LS2513	
Decoders/Demultiplexers, Multiplexers		
1-of-10 Decoder/Demultiplexer (with polarity control)	25LS2537	
1-of-8 Decoder/Demultiplexer (with control storage)	25LS2536	
1-of-8 Decoder/Demultiplexer (with polarity control)	25LS2538	
Dual 1-of-4 Decoder/Demultiplexer (with polarity control)	25LS2539	
8-Input Multiplexer (with control storage)	25LS2535	
Registers		
4-Bit Register (with common clock enable)	25LS08	25S08
4-Bit Register (with 2-input multiplexers on inputs)	25LS09	25S09
4-Bit Register (with standard and 3-state outputs)	25LS2518	25S18
4-Bit, 2-Output 3-State Register	25LS2519	
6-Bit Register (with common clock enable)	25LS07	25S07
8-Bit Shift/Storage Register (with synchronous clear)	25LS23	
8-Bit Shift/Storage Register (with asynchronous clear)	25LS299*	
8-Bit Shift/Storage Register (with sign extend)	25LS22	
Octal D-Type Register (with common clear)	25LS273*	
Octal D-Type Register (with common clear, buffered outputs)	25LS273B	
Octal Transparent Latch (with 3-state outputs)	25LS373*	25S373*
Octal Transparent Latch (with inverting 3-state outputs)	25LS533*	25S533*
Octal D-Type Register (with 3-state outputs)	25LS374*	25S374*
Octal D-Type Register (with inverting 3-state outputs)	25LS534*	25S534*
Octal D-Type Register (with common enable)	25LS377*	
Octal D-Type Register (with common enable, buffered outputs)	25LS377B	
Octal D-Type Register (with common enable and clear, 3-state outputs)	25LS2520	
Counters		
BDC Decade Counter (with asynchronous clear)		93S10 54/74S160
Up-Down Decade Counter (with synchronous preset, 3-state outputs)	25LS2568	
Binary Counter (with asynchronous clear)		93S16 54/74S161
Up-Down Binary Counter (with synchronous preset, 3-state outputs)	25LS2569	
Parity Checker/Generator		
9-Input Parity Checker/Generator		82S62
12-Input Parity Checker/Generator		93S48

*Also available in 54/74 versions.

© IC MASTER 1984

DESIGN AIDS

AmSYS™29 Microprogram Development System

The AmSYS™29 is a complete development system for microprogrammed machines. It is a useful tool for designing initial hardware/firmware, for assembling and debugging microcode and for checking out hardware.

AmSYS™29 includes a CP/M compatible operating system, 2Kx64 bit words of high-speed Writable Control Store and high-speed Emulation Control Logic. The options and peripherals offer a high-speed trace, line printer, PROM programmer interface and CRT console.

Features:

- AMDASM meta-assembler language definition and source file assembly
- High-Speed Emulator integrating bipolar logic and microcode
- High-Speed Writable Control Store
- Optional 10-MHz High-Speed Microcode Trace
- AmDOS29 CP/M compatible disk operating system
- Dual single-density floppy disk drives upgradable to double density

Am2900 Learning and Evaluation Kit

The Am2900 Learning and Evaluation Kit provides a stripped-down model of a typical microprogrammed controller or computer for introducing engineers to the architecture of microprogrammed systems.

It contains a small but powerful microprogrammed control unit driving several data handling elements including an Am2901B 4-bit CPU slice. The microprogram memory in the kit is a read/write memory so that sequences of microinstructions can be entered by the user, then executed. The data control portion of each microinstruction controls all inputs to the Am2901B, shift and rotate logic and a status register that captures ALU conditions following each cycle. Each microinstruction also contains a 4-bit sequence control field, which is used to select one of 16 different sequence control instructions and a branch address. The instructions are decoded in a PROM that controls an Am2909 microprogram sequencer. Once entered, microinstructions may be executed using a single-step clock or a pulse generator.

The Am2900 Learning and Evaluation Kit includes 40 integrated circuits, 26 resistors, 16 capacitors, 15 switches, 12 LEDs and the PC board. The only item not supplied is a 5V, 2A power supply. Also included is the user's manual, a 114-page book containing chapters on the theory of microprogramming, the assembly and testing of the kit and exercises that demonstrate the application of the architecture and operation of the Am2901B and Am2909.

Bit-Slice Microprocessor Design

This 384-page book is invaluable as a learning tool or reference manual. Authored by AMD, the text discusses in detail the design of a microprogrammed computer using the Am2900 Family. Application examples are used extensively and theory is pared to essentials. Chapters include:

I – Computer Architecture
II – Microprogrammed Design
III – The Data Path
IV – The Data Path, Part Two
V – Program Control Unit
VI – Interrupt
VII – Direct Memory Access
VIII – The HEX-29 Single-Board Computer
IX – The Super Sixteen Single-Board Computers

Bit-Slice Microprocessor Design by J. Mick and J. Brick, ISBN 0-07-041781-4, may be obtained from your local bookstore or ordered directly from McGraw-Hill Book Co., Suite 26-1, 1221 Avenue of Americas, New York, NY 10020.

AMD School of Advanced Engineering

The AMD School of Advanced Engineering offers three courses for the Am2900 Family designer: Introduction to Designing with the Am2900 Family, Microprogrammable Computer Architecture and Introduction to Design with a Development System. Comprehensive course notes are available without course attendance for a fee of $175.00/set. For more information regarding course content, schedule or fees, or to order course notes, please contact:

AMD School of Advanced Engineering
430 Lakeside Drive
Sunnyvale, CA 94086
408/732-2400 Ext. 2325

© IC MASTER 1984

Advanced Micro Devices

MOS MICROPROCESSOR PRODUCTS

The iAPX86 Microprocessor Has Captured 80% of the 16-Bit Market and Has Scored over Six Thousand Design Wins.

Dataquest indicates that the iAPX CPUs have won over 80% of the 16-bit microprocessor market. The iAPX86 CPUs have been chosen by most other domestic producers and by ten out of twelve Japanese contenders for their personal and professional computers.

The 8086 and the 8088 Have Become the CPUs of Choice in the Personal and Professional Computer Markets.

When a microprocessor achieves this kind of "critical mass," it will continue to gather momentum. It gets the best vendor support, acquires the broadest aggregate of peripherals and achieves the most third-party support. It gains and maintains an insurmountable lead over its competition.

Over and above this insurmountable lead based on momentum, a constant array of state-of-the-art performance and integration upgrades will not only maintain this lead but increase it.

iAPX86-Based Systems Get to Market Faster.

A microprocessor-based system must provide users with *high-performance*. Over 90% of 16-bit applications are written in high-level language like Pascal, PL/M or Fortran and, therefore, it is critical that a microprocessor-based system responds to this need.

The 8086, like all microprocessors in the iAPX Family, is specifically designed to execute compiled high-level language programs. *The 8086 executes Pascal benchmarks twice as fast as competitive CPUs* and with only 60% of the memory code required by those CPUs.

High-level language efficiency permits system and application software to be written much more quickly and that means systems **are put on the market much sooner, earning revenue much sooner.**

The iAPX Family Saves the User the Cost of Additional Design and Software Investment.

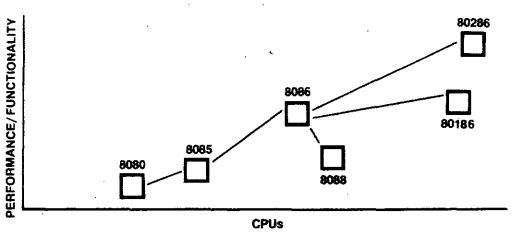

As you make the transition from the 8-bit world to 16-bit design, two areas of continuity are critical. On the one hand, the software investment in the existing 8-bit design must be preserved. On the other, the even larger investment in the design training of company engineers must be preserved. They have spent thousands of man-hours learning the instruction sets, the addressing, the modes, the memory layout and the input/output interfacing techniques for the previous microprocessor base.

The iAPX Family meets both continuity needs. In fact, upward compatibility is a critical underlying design assumption in all of the iAPX Family CPUs. By subscribing to the iAPX design philosophy, 8080-, 8085- or Z80*-user's applications programs will achieve 16-bit performance without incurring large transition costs. The core of the program can be kept intact and engineers do not have to be retrained for the new design environment.

*Z80 is a trademark of Zilog, Inc.

© IC MASTER 1984

The iAPX Family Offers You Two 16-Bit Upgrade Paths from the 8086. The MC68000 Offers Only One.

	68000	8086	iAPX186
Components	CPU Clock Timer DMA Interrupts Latches Transceivers Chip Selects	CPU Clock Timer DMA Interrupts Latches Transceivers Chip Selects	CPU Latches
Est. Price	**$100**	**$76**	**$36**

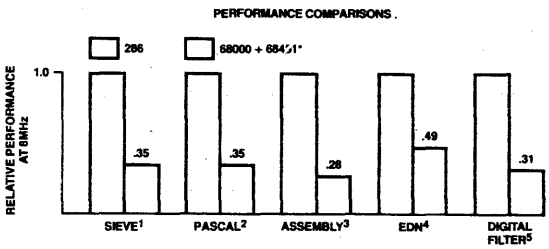

*Performance adjusted to reflect indicated system configuration. Details available from Intel. [1]"A High Level Language Benchmark." Byte. Sept., 1981. [2]"A Performance Evaluation of the Intel iAPX 432," Computer Architecture News. June 1982. [3]"16 Bit Microprocessor Benchmark Report." Intel Corporation, 1981. [4]"16 Bit Microprocessor Benchmarks," EDN, Sept., 1981. [5]"Digital Filter Implementation on 16 Bit Microprocessors," IEEE MICRO, Feb. 1981.

Market competition demands that systems manufactures provide lower-cost and/or better performance through periodic system upgrades. The farsighted managers in the engineering community must therefore always be prepared to answer the question: Where do we go from here?

Having a flexible series of upgrade options, all software compatible, will provide for tomorrow's designs today. The fact is, only the iAPX Family offers the ease of upgrading, the cost-effectiveness, the variety of microprocessors to optimize specific needs and the software support needed to answer the 'Where-do-we-go-from-here' question.

Consider the iAPX186, a major breakthrough in hardware integration. It contains a direct-memory access (DMA) controller, clock circuitry, a counter/timer, and chip-select control and logic on the same silicon as the CPU. The '186 boasts a factor-of-two performance improvement over the 8086 and the cost improvement is dramatic. The basic system component cost for an iAPX186 system is just $36.00, half the price of an equivalent 8086 system and as little as one-third the cost of an MC68000 system. *The system cost of the '186 is competitive with today's 8-bit systems but with 15 times the performance.* Moreover the iAPX186 is completely software compatible with the 8086. It also has several new instructions which enhance performance by combining more than one operation in a single instruction.

The iAPX286 represents a major breakthrough in performance and software integration. Providing an upgrade option for applications that need operation system sophistication, this device contains the necessary 'housekeeping' software functions on the same chip as the CPU. A '286-based system can easily support multiuser configurations, a multilevel access hierarchy (for system security and operating system protection), in addition to a one-gigabyte virtual memory. The 10MHz iAPX286 provides 3.3 times the performance of the 10MHz 8086, *2.5 times the performance of the 10MHz MC68000*, and is software compatible with other iAPX86 CPUs.

The forthcoming iAPX386 is a performance-oriented software-compatible upgrade path into the 32-bit world from an existing 16-bit system. The '386 will be software-compatible with all 8- and 16-bit iAPX Family CPUs, protecting your valuable investment in applications programming and engineering resources.

© IC MASTER 1984

The iAPX Family Has the Best Software Support in the Microprocessor World.

Considerably more than half the cost in bringing a 16-bit system to market is for software. No other microprocessor even comes close to having the software support of the iAPX Family. Users can choose from a broad selection of *operating systems, compilers, cross-assemblers* and *applications packages* of all sorts, not to mention the *development system utilities* and *debuggers*. By building your system around an iAPX Family microprocessor you have eliminated many of the costly and time-consuming problems related to software availability and compatibility.

By using an iAPX Family microprocessor, you do not have to take chances on development systems and software support tools. They are all up and running now so you can put a firm lid on those costs to free up engineering resources to design for a particular application.

Over 80% of All Systems and Applications Software Is Written for iAPX Family-Based Software.

In addition to a library of Intel-written software, a very active third-party software market has subscribed to iAPX Family programming. That means that an iAPX microprocessor user's software is secure. Another core of iAPX Family software is and will continue to be written for the IBM personal computer. When a system is built around an iAPX microprocessor, the collateral benefit is the availability of hundreds of thousands of dollars worth of software. This software continues to work for you even as you upgrade from an 8086 to an iAPX186 or to an iAPX286.

As a recent Intel advertisement puts it, "There are 30,000 programmers ready to work for you – or against you."

Software Type	Number of Packages Available	Sources
Operating System	11	Supersoft, DRI, Compuview, Concurrent, Micropro, Intel, IBM ...
Tools and Utilities	25	Microsoft, DRI, Supersoft, Micropro, TSI, Ensign, DMA ...
Translators and Converters	10	DRI, SORCIM, Intel ...
High-Level Languages	45	Computer Innovations, Softech, Microcorp, Armadillo, DWB, RR Software ...
Applications Packages	140	Compumax, Ferox, Condor, Keller Software, Eagle, Statcom, CMC, Peachtree ...

© IC MASTER 1984

The 8087 Numeric Data Processor (NDP) Makes the iAPX Family the Most Powerful, Full-Function Choice for Math Intensive Applications.

The 8089 Input/Output Processor (IOP) Performs Certain Functions That Reduce the Load on the CPU, Making the System More Versatile than Other Microprocessors.

The 8087 Numeric Data Processing can boost the performance of an iAPX CPU by two orders of magnitude in mathematics-intensive applications.

The 8089, the most intelligent single-chip DMA and I/O controller ever built, dramatically improves the performance of an iAPX CPU handling input/output-intensive applications. Because the 8089 operates as a coprocessor, not as an ordinary peripheral, the 8089 makes the iAPX CPUs the hands-down winners in such situations because of its intelligent processing capability.

The 8089 takes care of service requests, does status monitoring for peripherals, performs high-speed block transfers of data up to 1.25Mbytes/sec and processes the I/O in a number of programmable modes.

Because the 8087 and the 8089 act as *extensions of the CPU*, they operate in lockstep with the CPU without the normal CPU intervention overhead associated with ordinary peripherals. In effect, they provide an addition to the iAPX CPU's command repertoire.

The 8087 NDP and the 8089 IOP represent a major step forward for applications flexibility. Rather than building a more elaborate (and costly) CPU, or a dedicated semi-custom (and very costly) CPU, the iAPX Family design philosophy offloads the more specialized functions to these two sophisticated devices.

EXECUTION TIME FOR SELECTED 8087 NUMERIC INSTRUCTIONS AND CORRESPONDING 8086 EMULATION

Floating Point Instruction	Approximate Execution Time (μs)	
	8087 (5MHz Clock)	8086 Emulation
Add/Subtract Magnitude	14/18	1,600
Multiply (single precision)	19	1,600
Multiply (extended precision)	27	2,100
Divide	39	3,200
Compare	9	1,300
Load (double precision)	10	1,700
Store (double precision)	21	1,200
Square Root	36	19,600
Tangent	90	13,000
Exponentiation	100	17,000

© IC MASTER 1984

The iAPX Family of 16-Bit Microprocessors Is Supported by the Best and the Broadest Range of True 16-Bit Peripherals in the World.

Beside the 8087 NDP, the 8089 IOP and a wide variety of popular, standard microprocessor peripheral devices, there is a broad menu of true 16-bit peripherals available for use with iAPX CPUs.

Advanced Micro Devices has been in the high-performance peripheral market for years. Our proprietary large-scale integration (LSI) devices bring out the latent superior performance inherent in most microprocessors. All of AMD's proprietary 16-bit peripherals interface easily with iAPX Family bases and are Multibus*-compatible. Here are some of AMD's more notable peripheral products.

Advanced Micro Devices' Am9516 Universal DMA Controller (UDC) provides unequalled throughput in the 16-bit world. For applications that do not require the elaborate instruction set featured in the 8089 IOP, the Am9516 UDC is the best choice, providing up to a 4-Mbyte/sec transfer rate in the flowthrough mode and 6Mbytes/sec in the flyby mode.

The AmZ8530** Serial Communications Controller (SCC) is another example of superior options. Beside a variety of programmable modes (like SDLC, HDLC and IBM Bisync) that provide greater flexibility than other serial I/O devices, the AmZ8530 SCC also contains on-chip baud-rate generators and a powerful set of interrupts. It is also very fast. The AmZ8530 SCC offers a 1.5Mbit/sec transmission rate versus less than 1Mbit/sec offered by the best of other competitive offerings.

The Am9513A Programmable Interval Timer (PIT) is a better design alternative for applications that require complex timing and synchronization. The Am9513A PIT has five timers (versus three for other offerings) and has twenty-two distinct operating modes (versus six or less). The device easily interfaces with the iAPX Family's 16-bit data bus.

The Am9520 Burst Error Processor (BEP) and the Am9518 Data Cipher Processor (DCP) offer additional performance options to the 16-bit designer. These devices are specifically designed to serve disc controller applications. The Am9520 BEP offers high-speed error detection and correction capabilities in a single device. The Am9518 DCP offers high-speed data encryption and secure transmission abilities on a single chip and meets the National Bureau of Standards' data encryption standards.

Advanced Micro Devices will also manufacture the Am8052/Am8152 Cathode-Ray Tube Controller chip set which will provide sophisticated alphanumeric and business graphics capability. In addition, AMD has the Am7910 Frequency-Shift Key (FSK) Modem (a single-chip device which contains all the modulation, demodulation and filtering functions necessary for telecommunication of data) and the Am7990/Am7991 Ethernet Interface chip set for support of that baseband mode of communication.

16-BIT SYSTEM

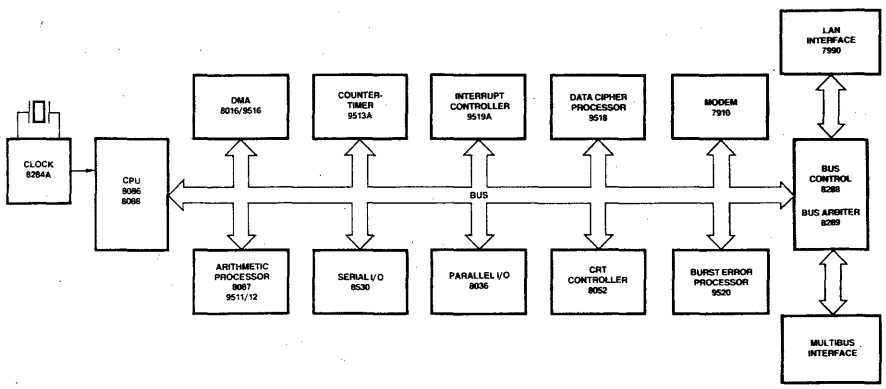

*Multibus is a trademark of Intel Corp.
**Z8530 is a trademark of Zilog, Inc.

© IC MASTER 1984

AMD and Intel Make the iAPX Family of Microprocessors the Most Thoroughly Supported CPUs in the World.

Historically, company-to-company agreements have been limited to alternate-source pacts defined by a specific number of products. That is, Company A would give Company B the technical information to make a part, and Company B would give Company A the technical information to make a part. Not any more.

The AMD/Intel Alliance is defined in terms of time, not parts. The lifetime of this technology-exchange is an unprecedented *ten years*. The technology-exchange is the vehicle for a total sharing of research and development, masks, test tapes and other necessary information so that AMD and Intel can develop and produce integrated circuits for the iAPX Family of microprocessors and related devices.

The AMD/Intel Alliance allows you to choose from what will become the deepest and broadest product group in the 16-bit MOS arena.

In that regard,

- AMD will manufacture, market and sell the iAPX Family of microprocessors and related parts.
- AMD will develop new circuits for the iAPX Family to be manufactured, marketed and sold by AMD and Intel.
- Intel will develop new circuits for the iAPX Family to be manufactured, marketed and sold by AMD and Intel.

As part of this cooperative iAPX strategy, AMD and Intel have ushered in a new era of cooperation between their respective design engineers. By building a microprocessor strategy around a common CPU series, the two companies are ready to take the next step in the alliance. AMD and Intel will divide the new product development responsibilities to bring more and better innovative iAPX Family peripherals to the market even faster.

Customer surveys show that the average ratio of peripheral devices per CPU in board designs is increasing dramatically. The ratio has already increased from two or three per CPU in 1980, and will increase to over six in 1985. With the combined resources of AMD and Intel, the iAPX Alliance will provide the broadest and the most sophisticated set of support peripherals in the world. By working together to eliminate duplication of effort, the two companies can guarantee that more parts will be available at a faster rate to fit your most important design needs in the future.

© IC MASTER 1984

Am8085A 8-Bit Central Processing Unit (CPU)

The Am8085A is an advanced, complete 8-bit parallel central processing unit. It is available with either 1.3μs or 0.8μs instruction cycle time and is 100% software compatible with the Am8080A/Am9080A.

The Am8085A incorporates a clock generator and system controller on-chip, thereby offering a high level of system integration. Additional enhancements include interrupt control logic, consisting of four vectored interrupts, and serial I/O lines. The Am8085A uses a multiplexed data bus. The address is split between the 8-bit address bus and the 8-bit data bus. Up to 64K bytes of memory can be directly addressed. The CPU requires a single, 5V supply and is available in either a plastic or hermetic 40-pin DIP.

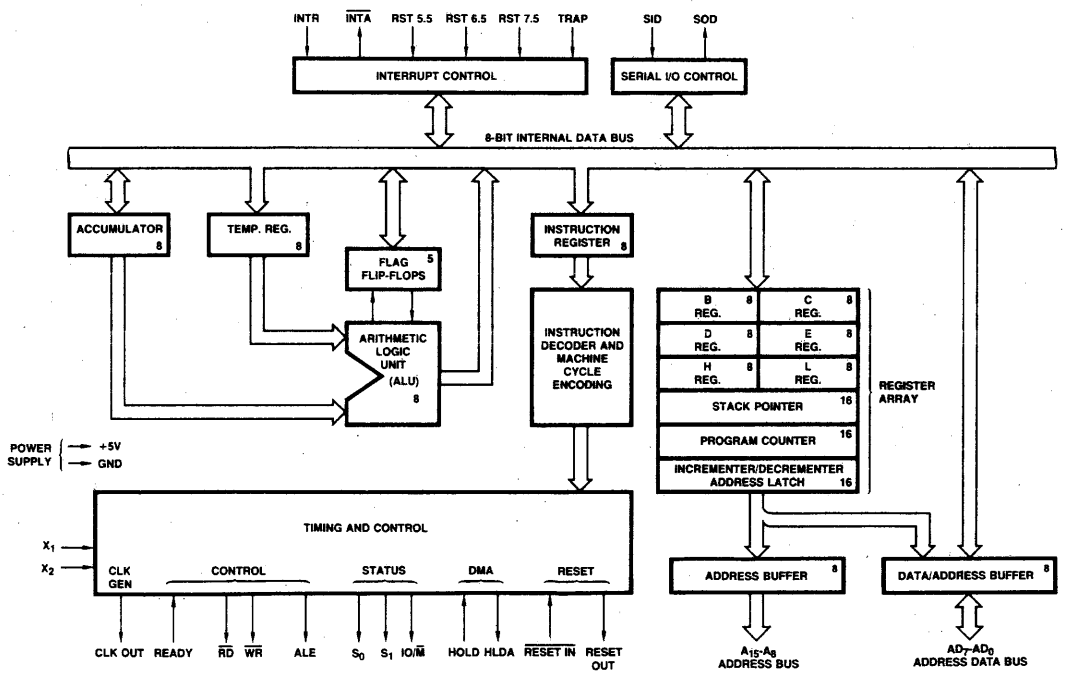

© IC MASTER 1984

Am8251/Am9551 Universal Synchronous/ Asynchronous Receiver/Transmitter (USART)

The Am8251/Am9551 is a programmable serial data communications interface that provides a universal synchronous/asynchronous receiver/transmitter function. It is normally used as a peripheral device for an 8-bit microprocessor system and may be programmed by the CPU to operate in a variety of standard serial communication formats.

Data, control, operation and format options are all selected by commands from the CPU. The USART can operate in an independent full duplex mode. It accepts parallel data from the CPU, formats and serializes the information based on its current operating mode, and then transmits the data as a serial bit stream. Simultaneously, serial data can be received, converted into parallel form, de-formatted, and then presented to the CPU. The Am8251/Am9551 is doubled buffered and can operate at clock frequencies of up to 2.8MHz.

The USART requires a single, 5V supply and is available in a 28-pin plastic or hermetic DIP.

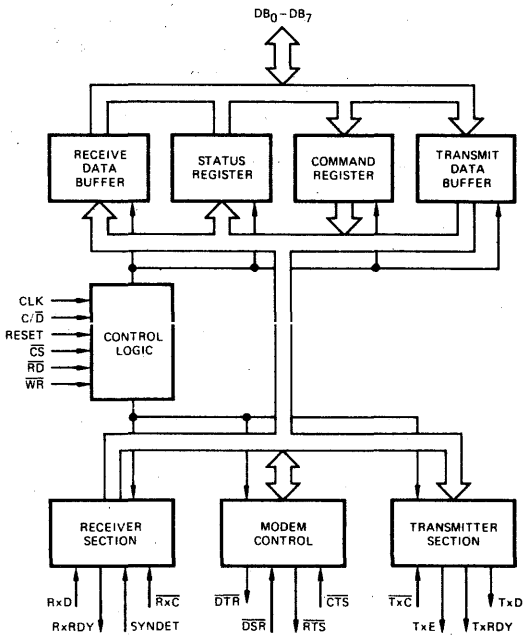

Am8253 Programmable Interval Timer

The Am8253 programmable interval timer/counter functions as a general-purpose, multitiming element in Am8080A/Am9080A and Am8085A microprocessor systems.

It is organized as three independent 16-bit counters, each with a count rate of up to 2.5MHz. A faster device, Am8253-5, allows full compatibility with the Am8085A. All modes of operation are software programmable.

The Am8253 requires a single, 5V supply and is available in a plastic or hermetic 24-pin DIP. For improved performance, see the Am9513 System Timing Controller.

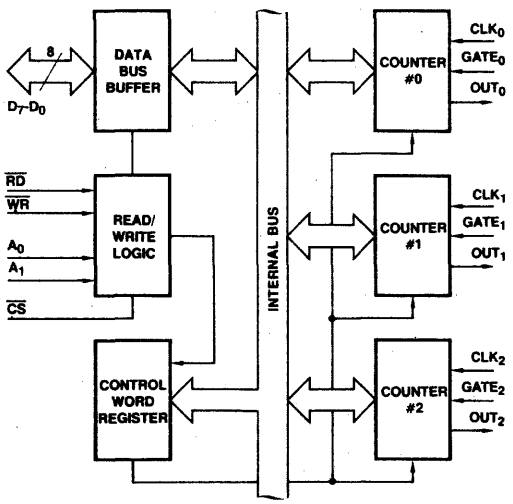

© IC MASTER 1984

Am8255A Programmable Peripheral Interface (PPI)

The Am8255A programmable peripheral interface functions as a general-purpose I/O component to interface peripheral equipment to the microcomputer data bus in Am8080A/Am9080A and Am8085A microprocessor systems. The functional configuration of the Am8255A is programmed by the system software so that generally no external logic is necessary.

The PPI has 24 I/O pins which may be individually programmed in two groups of 12 and used in three major modes of operation. In the first mode, each group of I/O pins may be programmed in sets of four and eight to be inputs or outputs. In the second mode, each group may be programmed to have eight input or output lines. Three of the remaining four pins are used for handshaking and interrupt control signals. The third mode is the bidirectional bus mode; it uses eight lines for a bidirectional data bus and five lines, borrowing one from the other group, for handshaking.

The Am8255A is available in two speed versions, requires a single 5V supply and is packaged in either a plastic or hermetic 40-pin DIP.

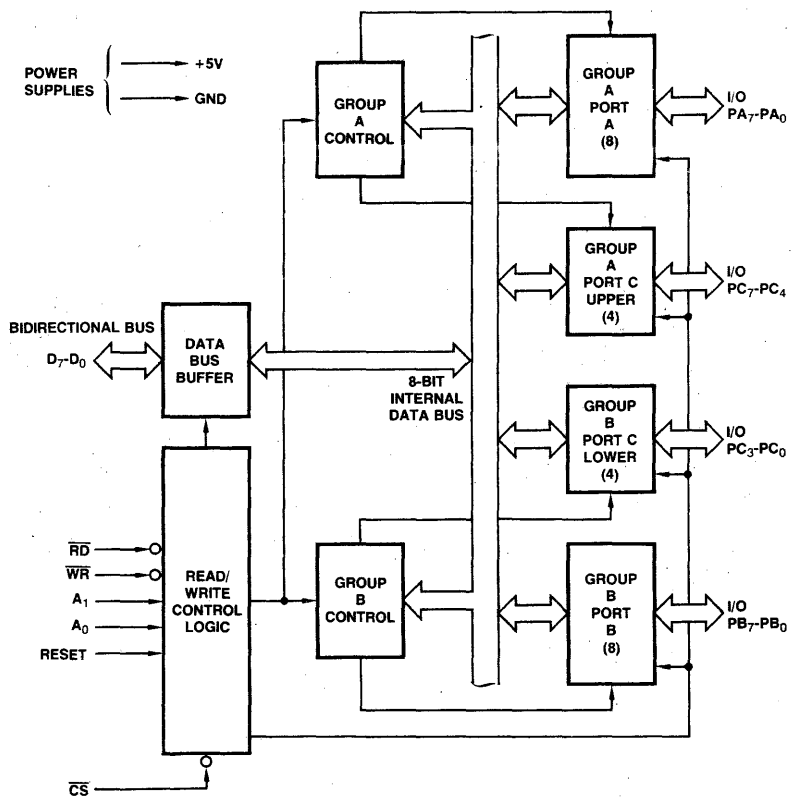

Am8257/Am9557 Direct Memory Access (DMA) Controller

The Am8257/Am9557 is a 4-channel direct memory access controller which permits the high-speed transfer of data directly between peripherals and memory in microcomputer systems.

When peripheral requests are received, the Am8257/Am9557 issues a HOLD signal to the host CPU, assumes control of the system busses, selects the highest priority peripheral for servicing, and generates the necessary control signals and memory address required for the data transfer. It maintains a byte count for each channel and issues a terminal count signal upon completion of the programmed number of transfers.

The Am8257/Am9557 requires a single, 5V supply and is available in either a plastic or hermetic 40-pin DIP. For improved functional and performance characteristics, see the Am9517A Multimode DMA controller.

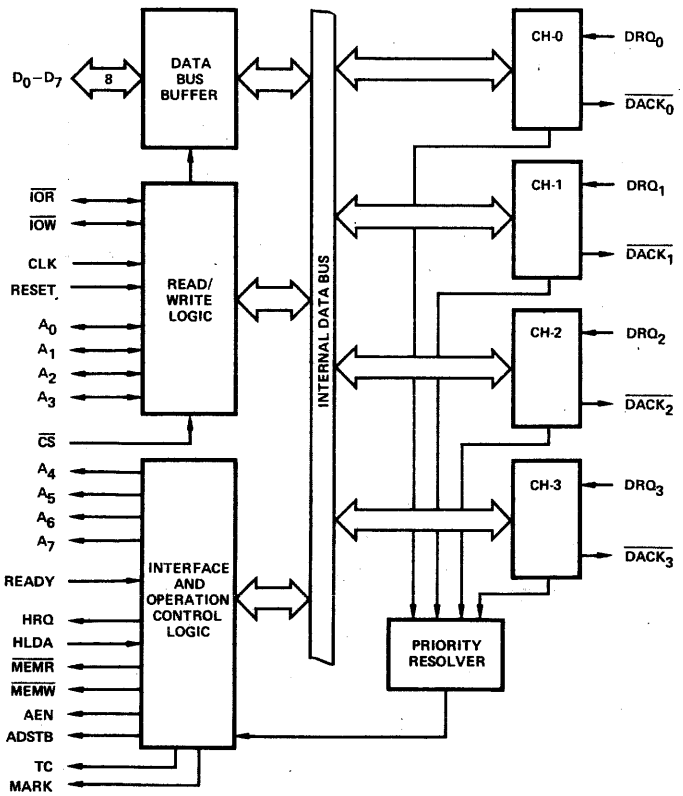

© IC MASTER 1984

Am8279 Keyboard/Display

The Am8279 programmable keyboard/display I/O interface controls data input and display functions in microprocessor systems. It connects directly to the microcomputer data bus and all operating modes are CPU programmable.

The Am8279 has two sections: keyboard and display. The keyboard portion can provide a scanned interface to a 64-contact key matrix, a sensor array or a strobed interface keyboard. Key depressions can be 2-key lock-out or N-key rollover. Keyboard entries are debounced and strobed in an 8-character FIFO. The display portion contains a 16 x 8 Display RAM which can be organized into dual 16 x 4. It provides a scanned display interface for LED, incandescent and other popular display technologies. Both right-entry calculator and left-entry typewriter display formats are possible.

Available in two speed versions, the Am8279 requires a single, 5V supply and is packaged in either a plastic or hermetic 40-pin DIP.

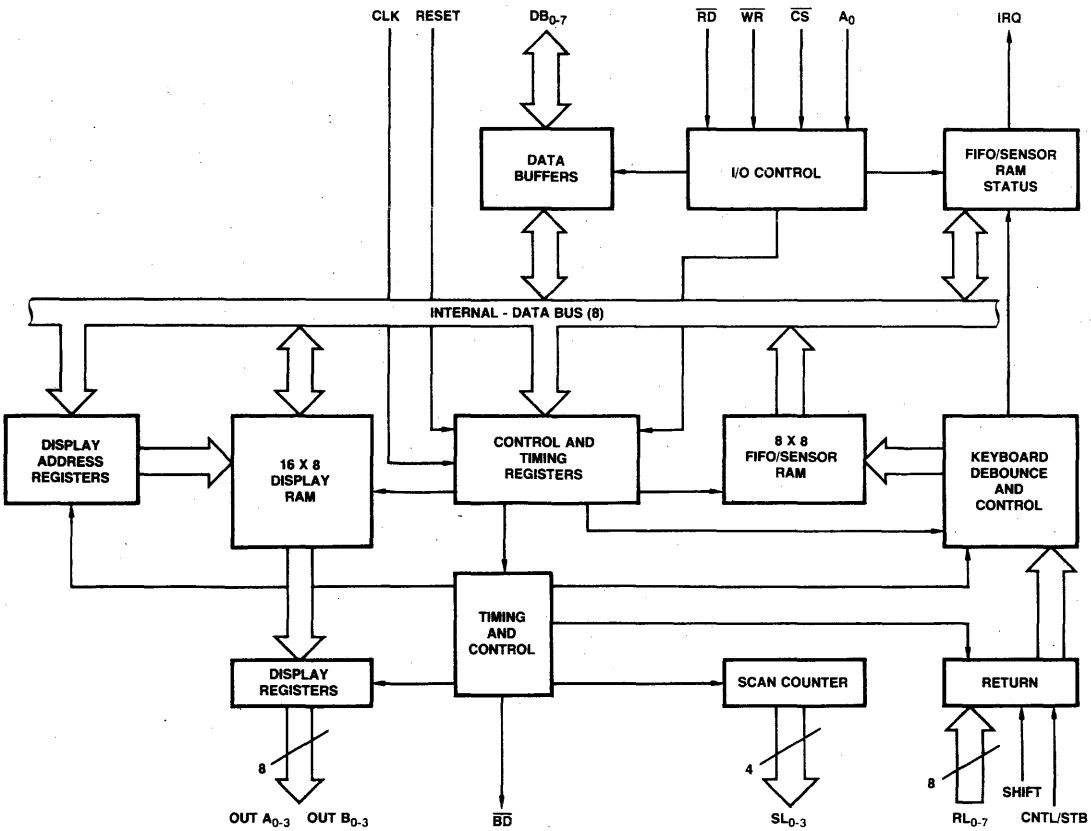

© IC MASTER 1984

Am9511A Arithmetic Processing Unit (APU)

The Am9511A arithmetic processing unit is used to enhance the computational capability of a wide variety of 8-bit microprocessor systems. It provides high performance 16 and 32-bit fixed-point and 32-bit floating-point arithmetic operations, performs trigonometric and inverse trigonometric functions, and executes a variety of mathematical operations such as square root, logarithm and exponentiation.

Data are transferred to and from the APU via a CPU by using conventional programmed I/O, or by a direct memory access device if higher transfer speeds are required. All transfers, including operand, result, status and command information, take place over an 8-bit bidirectional data bus. Operands are pushed onto an internal stack and a command is issued to perform operations on the data in the stack. Results are then available to be retrieved from the stack or additional commands may be entered. Upon completion of each command, the APU issues an end of execution signal; this signal may be used as an interrupt by the CPU to help coordinate program execution.

The Am9511A is available with a 2MHz, 3MHz or 4MHz maximum clock frequency in a hermetic 24-pin DIP.

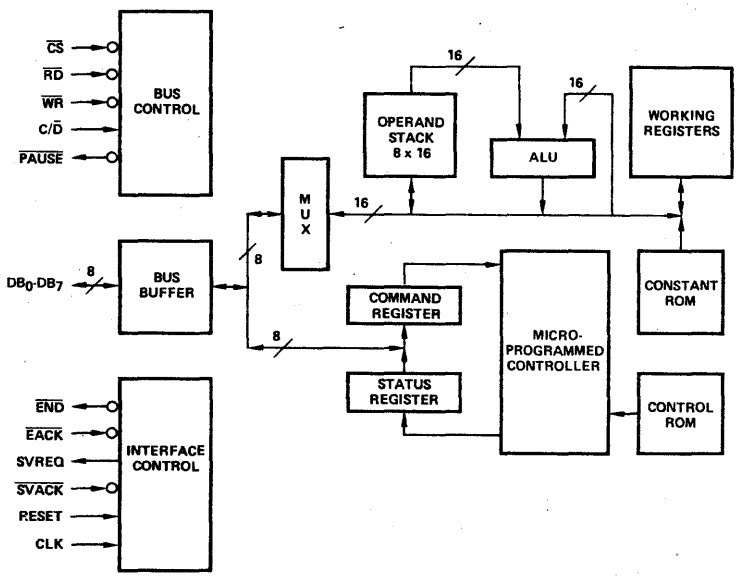

© IC MASTER 1984

Am9512 Floating-Point Processing Unit (FPU)

The Am9512 floating-point processing unit enhances the computational capability of the CPU in 8-bit microprocessor systems. It provides single precision (32-bit) and double precision (64-bit) add, subtract, multiply and divide operations.

Data are transferred between the Am9512 and the CPU by using programmed I/O or direct memory access techniques. The operand, result, status and command information transfers occur over an 8-bit bidirectional data bus. Operands are pushed onto an internal stack by the CPU and a command is issued to perform an operation on the data stack. The results of this operation are available to the CPU by popping the stack. Upon completion of an operation, the Am9512 issues an end of execution signal; this signal can be used to interrupt the CPU.

The FPU is available in two speed versions and is packaged in a hermetic 24-pin DIP.

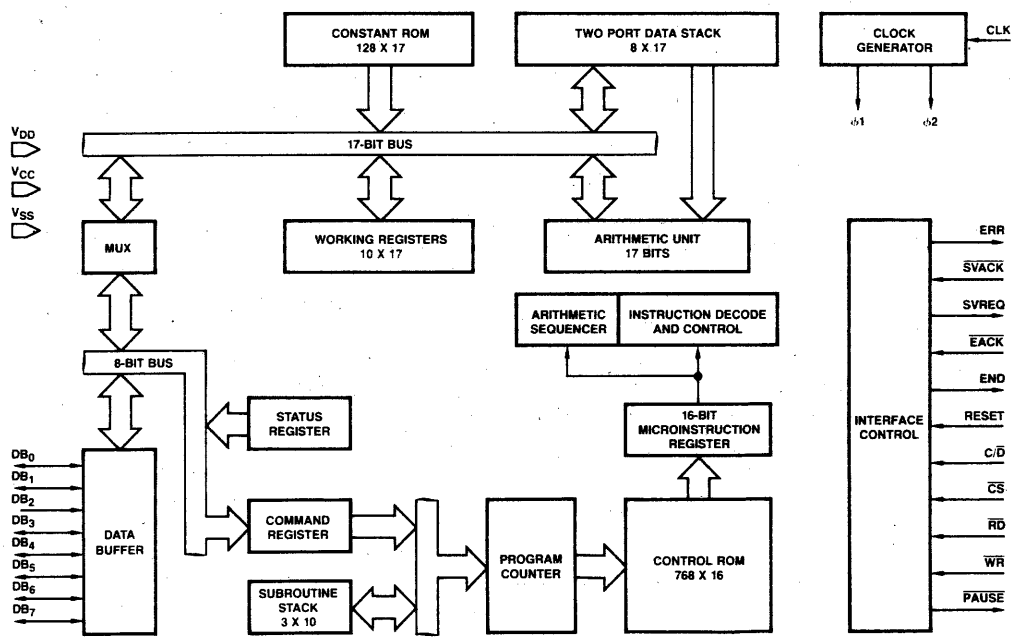

© IC MASTER 1984

Am9513 System Timing Controller (STC)

The Am9513 system timing controller performs many types of counting, sequencing and timing operations in 8-bit or 16-bit microprocessor systems. It provides the capability for programmable frequency synthesis, high-resolution programmable duty-cycle waveforms, retriggerable digital timing functions, time-of-day clocking, coincidence alarms, complex pulse generation, high-resolution baud-rate generation, frequency shift keying, stopwatch timing, event-count accumulation, waveform analysis and many more. A variety of programmable operating modes and control features allows the Am9513 to be personalized for specific applications as well as dynamically reconfigured under program control.

The STC includes five general-purpose 16-bit counters. A variety of internal frequency sources and external pins may be selected as inputs for individual counters with software selectable active-HIGH or active-LOW input polarity. Both hardware and software gating of each counter are available. Three-state outputs for each counter provide pulses or levels and can be active-HIGH or active-LOW. The counters can be programmed to count up or down in either binary or BCD. The CPU may read an accumulated count at any time without disturbing the counting process. Any of the counters my be internally concatenated to form an effective counter length of up to 80 bits.

The Am9513 requires a single, 5V supply and is available in either a plastic or hermetic 40-pin DIP.

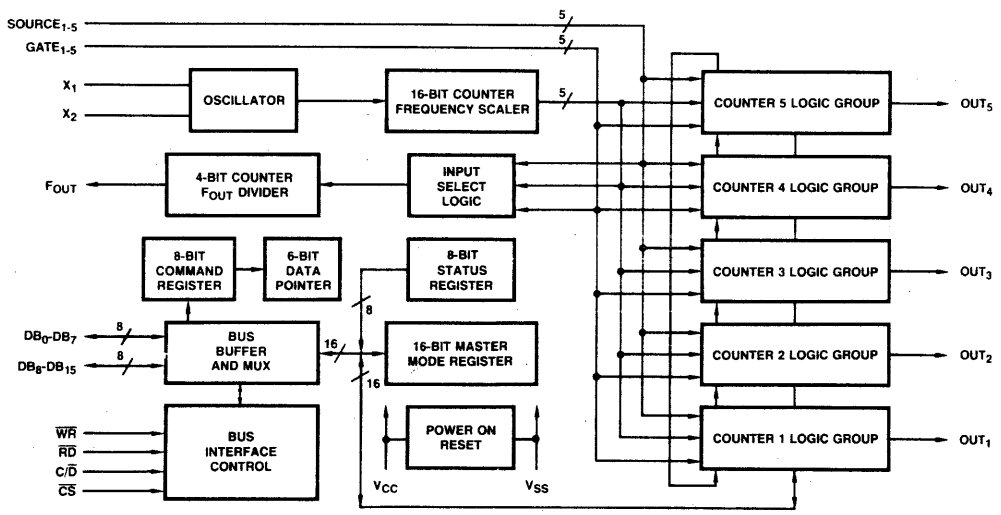

© IC MASTER 1984

Am9517A Direct Memory Access (DMA) Controller

The Am9517A multimode direct memory access controller improves microprocessor system performance by allowing external devices to directly transfer information to or from the system memory or from memory to memory. It offers a wide variety of programmable control features to enhance data throughput and allow dynamic reconfiguration under program control.

The Am9517A contains four independent DMA channels and can be expanded to any number of channels by cascading additional controller chips. Each channel has 64K address and word count capability and can be individually programmed to autoinitialize to its original condition following an End of Process (EOP). Each of the three active transfer modes – Single Word, Block and Demand – can perform Read, Write and Verify transfers. A memory-to-memory option is provided in addition to the standard memory-peripheral DMA transfer capability.

The DMA controller requires a single, 5V supply and is available in either a plastic or hermetic 40-pin DIP.

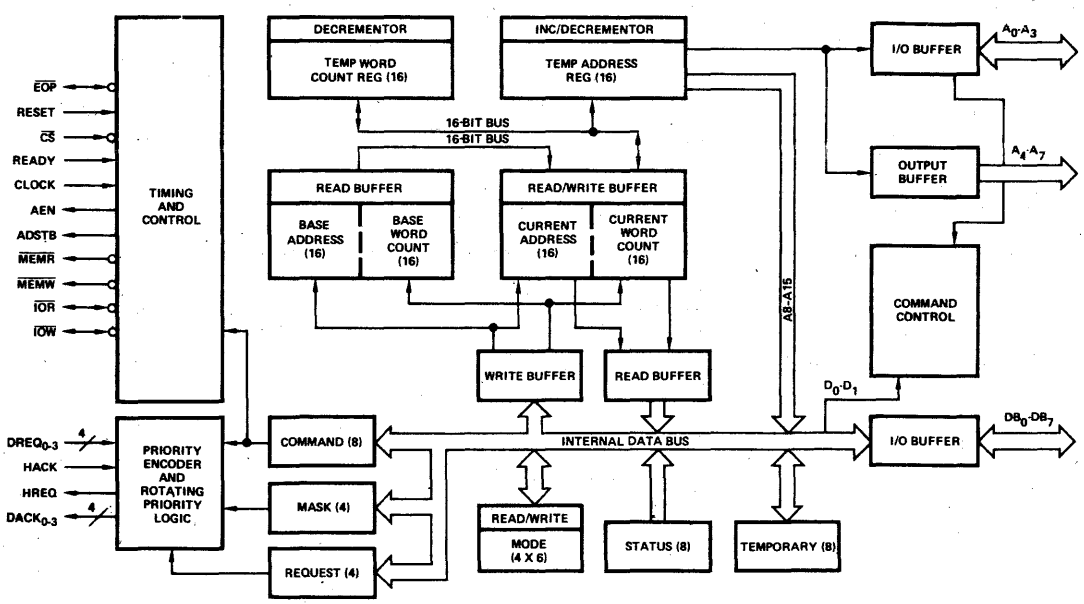

Am9518 Data Ciphering Processor (DCP)

The Am9518 data ciphering processor encrypts and decrypts data using the National Bureau of Standards encryption algorithm. It can be used in a variety of environments including dedicated controllers, communication concentrators, terminals and peripheral task processors in general microprocessor systems. The DCP provides throughput rates greater than one megabyte per second using the Cipher Feedback, Electronic Code Book or Chain Block Cipher operating modes. Separate ports are provided for key input, clear data and enciphered data to enhance security.

The Am9518 can be used in 8 or 16-bit microprocessor systems with the CPU programming the DCP through the master port. The DCP can also be configured to accept control information on dedicated control lines, allowing it to be used in 2900 based bit-slice designs, with the control information derived directly from microcode memory. In either configuration, once set up data can flow through the DCP at high rates because input, output and ciphering activities are performed concurrently. Control lines are provided for interfacing to external DMA devices.

The Am9518 requires a single, 5V supply and is available in either a plastic or hermetic 40-pin DIP.

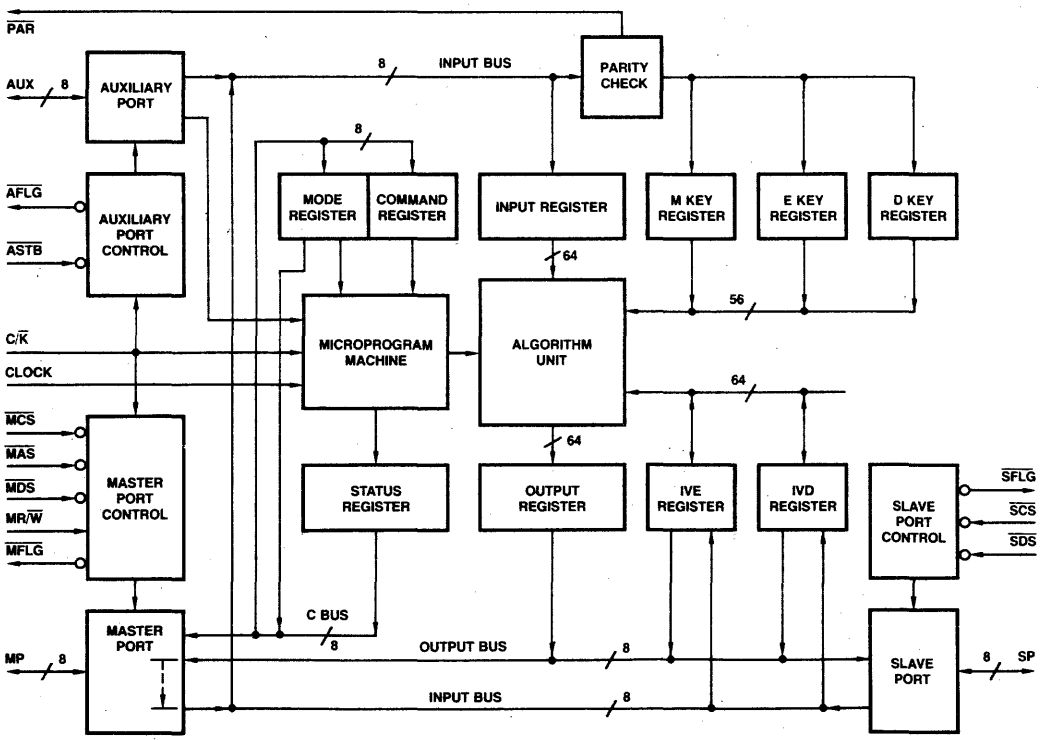

© IC MASTER 1984

Am9519A Interrupt Controller

The Am9519A universal interrupt controller provides a powerful interrupt structure to increase the efficiency and versatility of microcomputer systems. It contains, on one chip, all of the circuitry necessary to detect, prioritize and manage eight vectored interrupts. Its simple expansion structure allows many units to be cascaded for the control of large numbers of interrupts.

When the Am9519A receives an unmasked Interrupt Request, it issues a Group Interrupt output to the CPU. When the interrupt is acknowledged, the controller outputs the one-to-four byte response associated with the highest priority unmasked interrupt request. Since the response bytes are fully programmable, any instruction or vectoring protocol appropriate for the CPU may be used. The ability of the CPU to set interrupt requests under software control permits hardware prioritization of software tasks and aids system diagnostic and maintenance procedures.

The Am9519A requires a single, 5V supply and is available in either a plastic or hermetic 28-pin DIP.

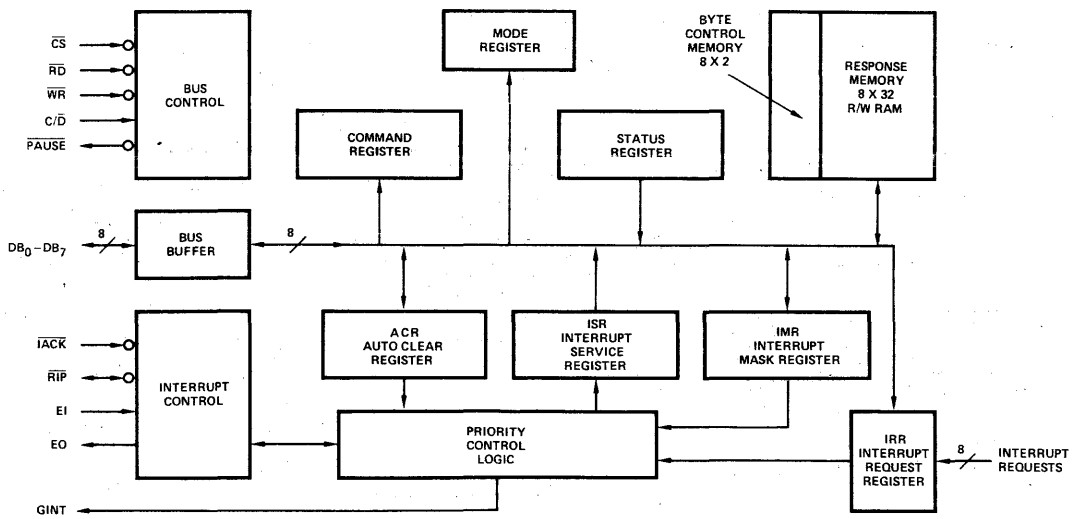

© IC MASTER 1984

Am9520 Burst Error Processor (BEP)

The Am9520 burst error processor provides a tool for implementing the most common error detection and correction schemes in microprocessor-based digital data-handling systems. Because modern disks use high data recording densities, the probability of errors occuring during data recovery is increased. Burst error detection and correction schemes based on Fire codes are used to correct such errors and to enhance the overall disk system performance.

The Am9520 provides four standard polynomials, including the popular 56-bit and 48-bit versions; logic levels on two inputs select the desired polynomial. For encoding, the data stream is divided by a selected polynomial using rules of algebra in polynomial fields. This division results in a remainder which is appended to the data as check bits. For error checking, the bit stream containing both data and check bits is divided by the same selected polynomial. If there are no detectable errors, this division results in a zero remainder. If an error is detected, the Am9520 will extract the burst error pattern and the location of the burst in the data stream.

The Am9520 requires a single-phase clock and a 5V supply. It is packaged in either a plastic or hermetic 40-pin DIP.

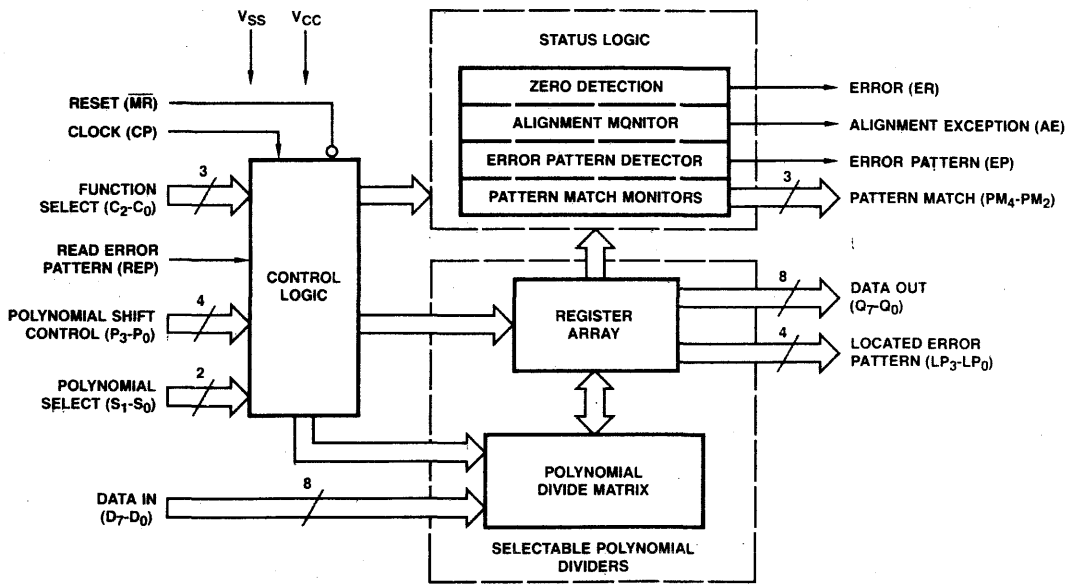

© IC MASTER 1984

ABBREVIATIONS OF COMPANY NAMES

Action Ins	Action Instruments
AD	Analog Devices
ADT	Advanced Digital Technology
Advent	Advent Products, Inc.
Alphatron	Alphatron
AMA	American Automation
AMD	Advanced Micro Devices
AMI	American Microsystems, Inc.
Amperex	Amperex Electronic Corp.
Analogic	Analogic
Analog Sys	Analog Systems
APC	Applied Micro Circuits
Apex	Apex Microtechnology
APM	Applied Microsystems Corp.
Appl Sys	Applied Systems Corp.
APT	Applied Microtechnology
Aptek	Aptek Microsystems
Array Tech	Array Technology
AWI	AWI Electronics
Barvon	Barvon Research
Bedford	Bedford Computer Systems Inc.
Burr-Brown	Burr-Brown
CAE	Computer Aided Engineering
Cal Devices	California Devices
Cermetek	Cermetek
CGRS	CGRS Microtech Inc.
Cherry	Cherry Semiconductor
CIC	Custom Integrated Circuits
CirTech	Circuit Technology
Citel	Citel
Comlinear	Comlinear Corporation
CMA	Custom MOS Arrays
Comark	Comark Corp.
Comdial	Comdial Semiconductor
Comp Auto	Computer Automation
Compas	Compas Microsystems
Cont Logic	Control Logic Inc.
Control Sys	Control Systems Microsystems Div.
CreMicro	Creative Micro Systems
Cromemco	Cromemco, Inc.
Cubit	Cubit Inc.
Curtis	Curtis Electro Devices, Inc.
Cybernetic	Cybernetic Micro Systems
Cybersys	Cybersystems
Cybertek	Cybertek Inc.
Data General	Data General
Data I/O	Data I/O
Data Trans	Data Translation
Datel	Datel
Datricon	Datricon Corporation
DDC	Data Devices Corporation
DEC	Digital Equipment Corporation
Die-Tech	Die-Tech
Digelec	Digelec Corp.
Digitek	Digitek, Inc.
Dionics	Dionics Inc.
Dist Comp	Distributed Computer Systems
Divers Tech	Diversified Technology
E-HI	E-H International, Inc.
EDI	Electronic Designs Inc.
Elind	Elind Elettronica Industriale
EMM-SESCO	EEM-SESCO
Emulogic	Emulogic Inc.
ETI Micro	ETI Micro
Exar	Exar Integrated Systems
Exel	Exel Microelectronics
Fairchild	Fairchild
Ferranti	Ferranti Electric
Force	Force Computers
Fujitsu A	Fujitsu America
Fujitsu	Fujitsu Microelectronics, Inc.
GI	General Instrument
GTE Micro	GTE Microcircuits
Harris	Harris Semiconductor
Heurikon	Heurikon Corp.
Hilevel	Hilevel Technology, Inc.
Hitachi	Hitachi America, Ltd.
Holt	Holt Inc.
HP	Hewlett-Packard
Hughes	Hughes Aircraft, Solid State Products
Hybrid Sys	Hybrid Systems
HyComp	HyComp
ICC	International Cybernetics
IDT	Integrated Device Technology
IMI	International Microcircuits, Inc.
IMP	International Microelectronic Products
IMS	Industrial MicroSystems Inc.
Infosphere	Infosphere
Inmos	Inmos
IntCirEng	Integrated Circuit Engineering
IntCirSys	Integrated Circuit Systems
IntCompSys	Integrated Computer Systems
Int Tech	Integrated Technology Corp.
Intech	Intech Microcircuits Div.
Intel	Intel
Interdesign	Interdesign
Intersil	Intersil
Intronics	Intronics
ITT	ITT Semiconductors
Kinetic Sys	Kinetic Systems
Kontron	Kontron Electronics
Lambda	Lambda Semiconductor
Linear Tech	Linear Technology
LSI Comp	LSI Computer Systems
LSI Logic	LSI Logic Corporation
Master Logic	Master Logic Corporation
Matrix	Matrix Corp.
Matrox	Matrox Electronic Systems
Maxim	Maxim Integrated Products
MCC	Micro-Computer Control
MCE	MCE Electronics
Micrel	Micrel
Micro Innov	Micro Innovators
Micropac	Micropac Industries
Micro Net	Micro Networks
Micro Pwr	Micro Power Systems
Micro Sci	Micro Sciences Corp.
Micro Tech	Microcircuits Technology
Micro-Link	Micro-Link Corporation
Micron	Micron Technology
MilerTron	MilerTronics
Miller	Miller Technology
Mitel	Mitel Semiconductor
Mitsubishi	Mitsubishi Electronics
MMI	Monolithic Memories, Inc.
Mostek	Monolithic Systems Corp.
Motorola	Mostek
MRC	Motorola Semiconductor
Murray	MRC Systems
Monosil	Murray Consulting
National	National Semiconductor
NCM	NCM Corp.
NCR	NCR Corp., Microelectronics Division
NEC	NEC Electronics
Nitron	Nitron
OAE	Oliver Advanced Engineering
Octagon	Octagon Systems Corp.
OEI	Optical Electronics Inc.
Ohio Sci	Ohio Scientic
OKI	OKI Semiconductor
Omnibyte	Omnibyte Corp.
Onset	Onset Computer Corp.
Panasonic	Panasonic
Pico Design	Pico Design
Polycore	Polycore Electronics
Plessey	Plessey Semiconductors
PMI	Precision Monilithics, Inc.
PragDes	Pragmatic Design Inc.
Pro-Log	Pro-Log Corp.
Quay	Quay Corp.
Raytheon	Raytheon Semiconductor
RCA	RCA Solid State Division
RCI Data	RCI Data
RELMS	Relational Memory Systems
Reticon	Reticon
RIFA	RIFA
Rockwell	Rockwell, Microelectronic Devices
RTC	Riehl Time Corporation
Sanyo	Sanyo
SBE	SBE, Inc.
SEEQ	SEEQ Technology, Inc.
SPI	Semi Processes Inc.
Siemens	Siemens
Si-Fab	Si-Fab
Signetics	Signetics
SGS	SGS Semiconductor
Sharp	Sharp
Silicon G	Silicon General
Siliconix	Siliconix
Silicon Sys	Silicon Systems Inc.
Siltronics	Siltronics
SMC	Standard Microsystems Corp.
S MOS	S MOS Systems
Solarise	Solarise Enterprises
Solitron	Solitron Devices
Sprague	Sprague Electric Company
SSM	Solid State Micro Technology for Music
SSS	Solid State Scientific
Stag	Stag Microsystems
STC	Storage Technology Corp.
STD	STD Microsystems
Struc Des	Structured Design Inc.
Stynetic	Stynetic Systems
Sunrise	Sunrise Electronics
Sunshine	Sunshine Semiconductor
Supertex	Supertex Inc.
Symtek	Symtek Corp.
Synertek	Synertek
Sys Innov	Systems Innovations
Tau Zero	Tau Zero Inc.
Technitrol	Technitrol
Tektronix	Tektronix
Teledyne C	Teledyne Crystalonics
Teledyne P	Teledyne Philbrick
Teledyne S	Teledyne Semiconductor
Telefunken	Telefunken
Telmos	Telmos
Teltone	Teltone Corporation
TI	Texas Instruments
Third Domain	Third Domain
Thomson-CSF	Thomson-CSF Components Corp.
Toshiba	Toshiba America
Trans-Data	Trans-Data
TRW	TRW LSI Products
Unitrode	Unitrode
Universal	Universal Semiconductor, Inc.
Varix	Varix Corp.
VLSI Design	VLSI Design Associates
VTI	VLSI Technology, Inc.
Votrax	Votrax
Weitek	Weitek Corporation
Western	Western Digital
Wintek	Wintek Corp.
Xicor	Xicor, Inc.
Xycom	Xycom
Zendex	Zendex Corp.
Zilog	Zilog
ZyMOS	ZyMOS Corporation
Zytrex	Zytrex Corp.

S6809/S68A09/S68B09

8-BIT MICROPROCESSING UNIT

Features

- ☐ Interfaces With All S6800 Peripherals
- ☐ Upward Compatible Instruction Set and Addressing Modes
- ☐ Upward Source Compatible Instruction Set and Addressing Modes
- ☐ Two 8-Bit Accumulators Can Be Concatenated Into One 16-Bit Accumulator
- ☐ On-Chip Crystal Oscillator (4 times XTAL)

General Description

The S6809 is an advanced processor within the S6800 family offering greater throughput, improved byte efficiency, and increased adaptability to various software disciplines. These include position independence, reentrancy, recursion, block structuring, and high level language generation.

Because the S6809 generates position-independent code, software can be written in modular form for easy user expansion as system requirements increase. The S6809 is hardware compatible with all S6800 peripherals, and any assembly language code prepared for the S6800 can be passed through the S6809 assembler to produce code which will run on the S6809.

Block Diagram

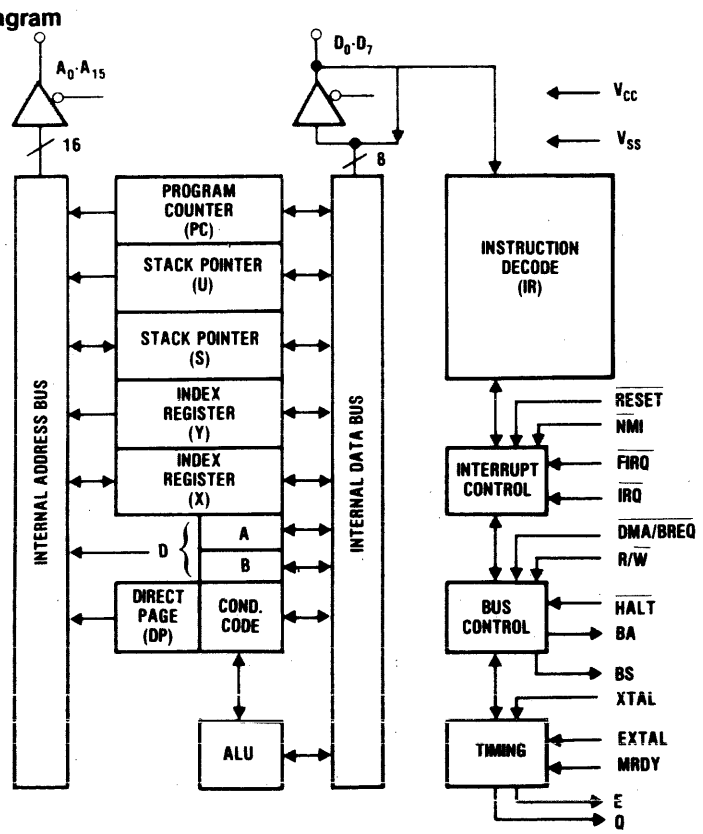

Pin Configuration

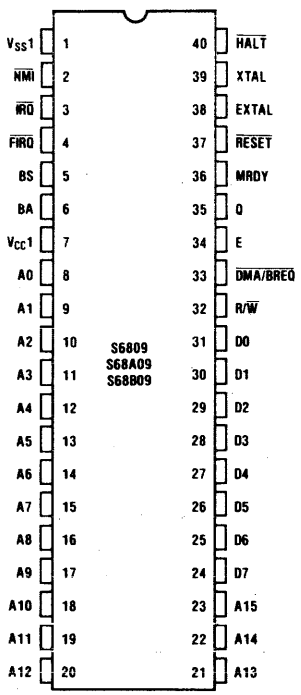

© IC MASTER 1984

A Subsidiary of Gould Inc.

S6551/S6551A

ASYNCHRONOUS COMMUNICATION INTERFACE ADAPTER

Features

- ☐ On-Chip Baud Rate Generator: 15 Programmable Baud Rates Derived from a Standard 1.8432MHz External Crystal (50 to 19,200 Baud)
- ☐ Programmable Interrupt and Status Register to Simplify Software Design
- ☐ Single +5 Volt Power Supply
- ☐ Serial Echo Mode
- ☐ False Start Bit Detection
- ☐ 8-Bit Bi-Directional Data Bus for Direct Communication With the Microprocessor
- ☐ External 16X Clock Input for Non-Standard Baud Rates (Up to 125K Baud)
- ☐ Programmable: Word Lengths; Number of Stop Bits; and Parity Bit Generation and Detection
- ☐ Data Set and Modem Control Signals Provided
- ☐ Parity: (Odd, Even, None, Mark, Space)
- ☐ Full-Duplex or Half-Duplex Operation
- ☐ 5, 6, 7, 8 and 9-Bit Transmission

General Description

The S6551/S6551A is an Asynchronous Communication Adapter (ACIA) intended to provide interfacing for the microprocessors to serial communication data sets and modems. A unique feature is the inclusion of an on-chip programmable baud rate generator, with a crystal being the only external component required.

Block Diagram

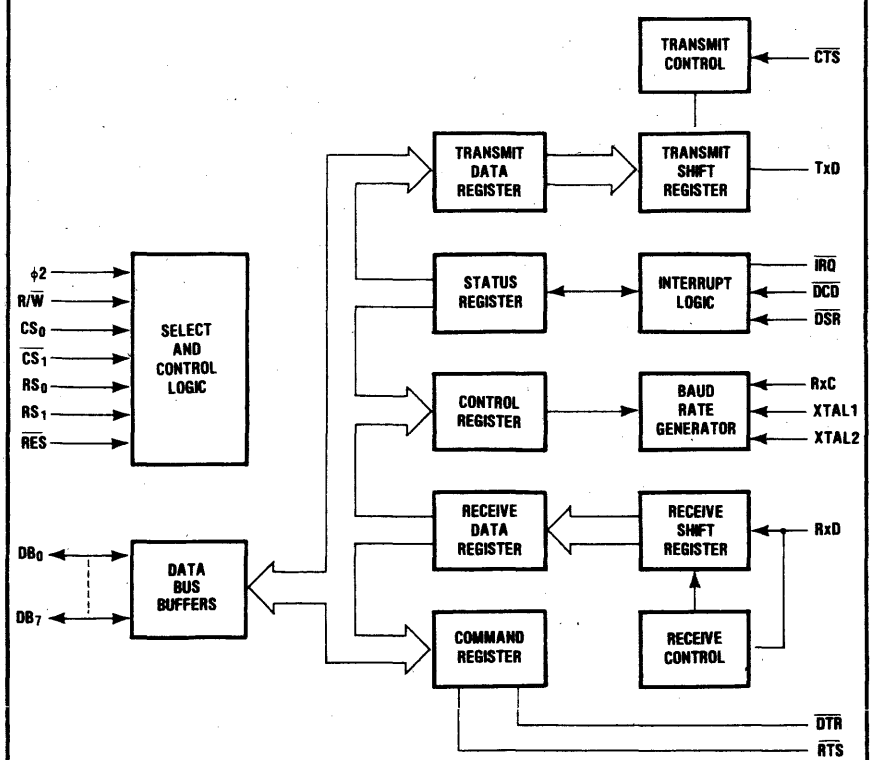

Pin Configuration

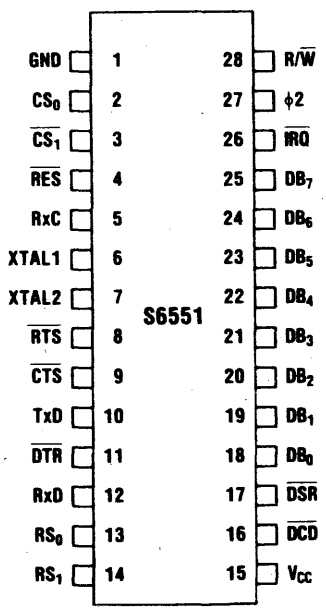

American Microsystems, Inc.

MICROPROCESSOR

© IC MASTER 1984

S6801

SINGLE CHIP MICROCOMPUTER

Features

- ☐ Instruction and Addressing Compatible
- ☐ Object Code Compatible
- ☐ 16-Bit Programmable Timer
- ☐ Single Chip or Expandable to 65K Words
- ☐ On-Chip Serial Communications Interface (SCI)
  - — Simplex
  - — Half Duplex
    Mark/Space (NRZ)
    Biphase (FM)
  - — Port Expansion
    Full/Half Duplex
- ☐ Four Internal Baud Rates Available
  $\phi 2 \div 16$, 128, 1024, 4096
- ☐ 2K Bytes of ROM
- ☐ 128 Bytes of RAM
  (64 Bytes Power Down Retainable)
- ☐ 31 Parallel I/O Lines
- ☐ Divide-by-Four Internal Clock
- ☐ Hardware 8 × 8 Multiply
- ☐ Three Operating Modes
  - — Single Chip
  - — Expanded Multiplex (up to 65K Addressing)
  - — Expanded Non-Multiplex
- ☐ Expanded Instruction Set
- ☐ Interrupt Capability
- ☐ Low Cost Versions
  - — S6803—No ROM Version
  - — S6803NR—No ROM or RAM
- ☐ TTL-Compatible with Single 5 Volt Supply

Block Diagram

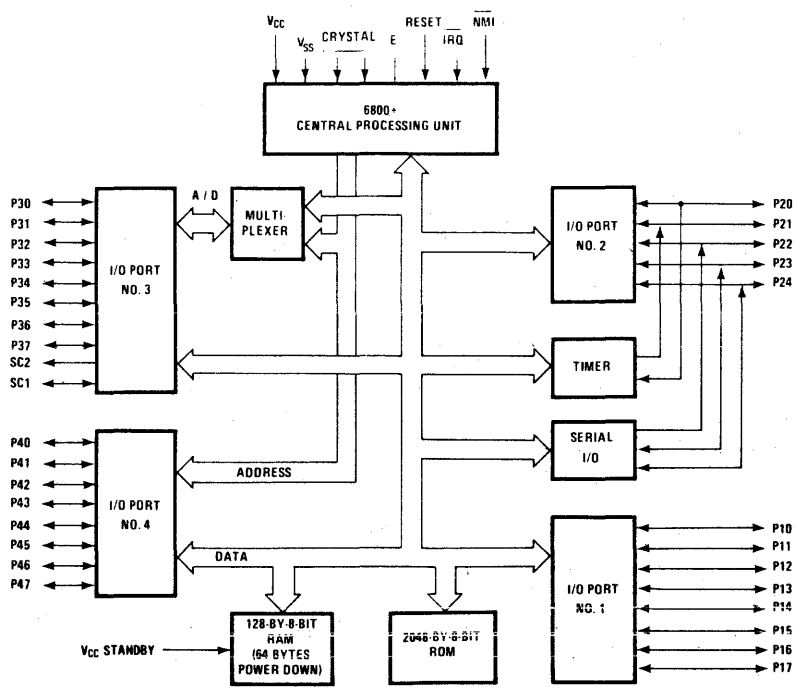

Pin Configuration

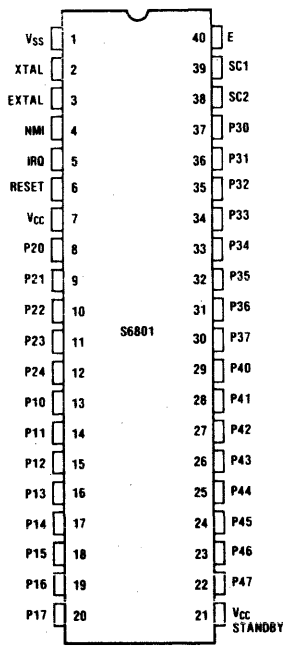

© IC MASTER 1984

A Subsidiary of Gould Inc.

S6805

MICROCOMPUTER

Features

☐ Hardware
- 8-Bit Architecture
- 64 Bytes RAM
- 1100 Bytes ROM
- 116 Bytes of Self Check ROM
- 28-Pin Package
- Memory Mapped I/O
- Internal 8-Bit Timer with 7-Bit Prescaler
- Vectored Interrupts—External, Timer, Software, Reset
- 20 TTL/CMOS Compatible I/O Line 8 Lines LED Compatible
- On-Chip Clock Circuit
- Self-Check Capability
- Low Voltage Inhibit
- 5 Vdc Single Supply

☐ Software
- Similar to 6800
- Byte Efficient Instruction Set
- Versatile Interrupt Handling
- True Bit Manipulation
- Bit Test and Branch Instruction
- Indexed Addressing for Tables
- Memory Usable as Registers/Flags
- 10 Addressing Modes
- Powerful Instruction Set
  - — All 6800 Arithmetic Instructions
  - — All 6800 Logical Instructions
  - — All 6800 Shift Instructions
  - — Single Instruction Memory Examine/Change
  - — Full Set of Conditional Branches

Block Diagram

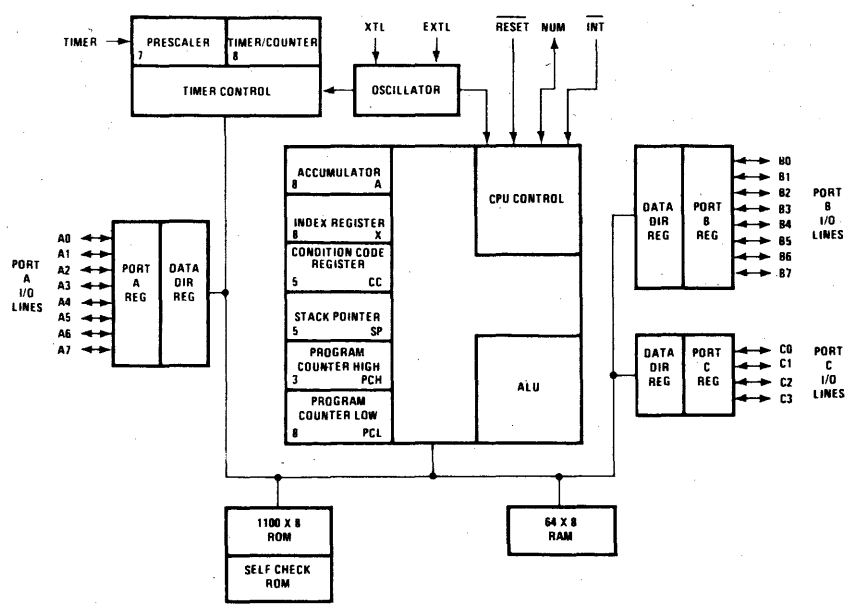

Pin Configuration

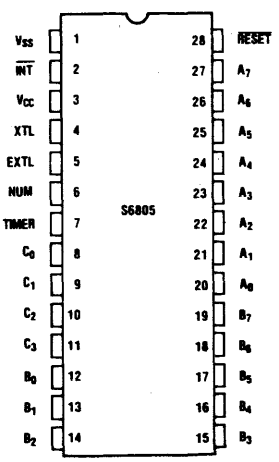

American Microsystems, Inc.

MICROPROCESSOR

© IC MASTER 1984

A Subsidiary of Gould Inc.

S68045/S68A045/S68B045

CRT CONTROLLER (CRTC)

Features

- ☐ Generates Refresh Addresses and Row Selects
- ☐ Generates Video Monitor Inputs: Horizontal and Vertical Sync and Display Enable
- ☐ Low Cost; MC6845/SY6545 Pin Compatible
- ☐ Text Can Be Scrolled on a Character, Line or Page Basis
- ☐ Addresses 16K Bytes of Memory
- ☐ Screen Can Be Up to 128 Characters Tall By 256 Wide
- ☐ Character Font Can Be 32 Lines High With Any Width
- ☐ Two Complete ROM Programs
- ☐ Cursor and/or Display Can Be Delayed 0, 1 or 2 Clock Cycles
- ☐ Four Cursor Modes:
  - Non-Blink
  - Slow Blink
  - Fast Blink
  - Reverse Video With Addition of a Single TTL Gate
- ☐ Three Interlace Modes
  - Normal Sync
  - Interlace Sync
  - Interlace Sync and Video
- ☐ Full Hardware Scrolling
- ☐ NMOS Silicon Gate Technology
- ☐ TTL-Compatible, Single +5 Volt Supply

Block Diagram

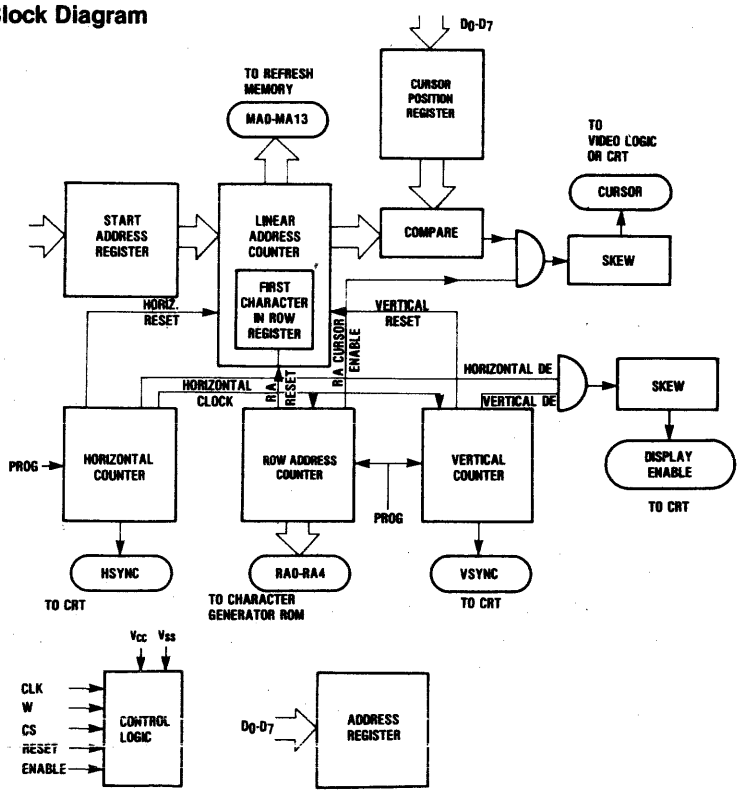

Pin Configuration

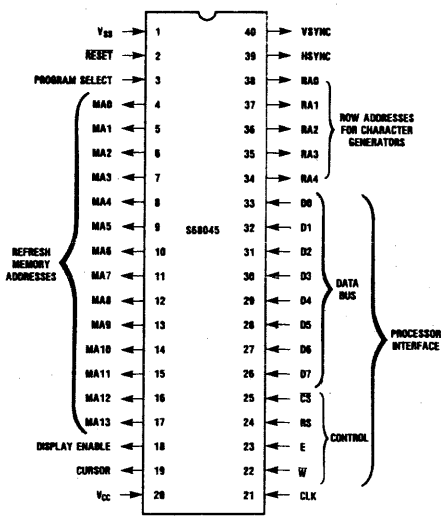

American Microsystems, Inc.

MICROPROCESSOR

© IC MASTER 1984

A Subsidiary of Gould Inc.

S9900

16-BIT MICROPROCESSOR

Features

- ☐ 16-Bit Instruction Word
- ☐ Full Minicomputer Instruction Set Capability Including Multiply and Divide
- ☐ Up to 65,536 Bytes of Memory
- ☐ 3.3MHz Speed
- ☐ Advanced Memory-to-Memory Architecture
- ☐ Separate Memory, I/O and Interrupt-Bus Structures
- ☐ 16 General Registers
- ☐ 16 Prioritized Interrupts
- ☐ Programmed and DMA I/O Capability
- ☐ N-Channel Silicon-Gate Technology

General Description

The S9900 microprocessor is a single-chip 16-bit central processing unit (CPU) produced using N-Channel silicon-gate MOS technology. The instruction set of the S9900 includes the capabilities offered by full minicomputers. The unique memory-to-memory architecture features multiple register files, resident in memory, which allow faster response to interrupts and increased programming flexibility. The separate bus structure simplifies the system design effort. AMI provides a compatible set of MOS memory and support circuits to be used with an S9900 system. The system is fully supported by software and complete prototyping systems.

Block Diagram

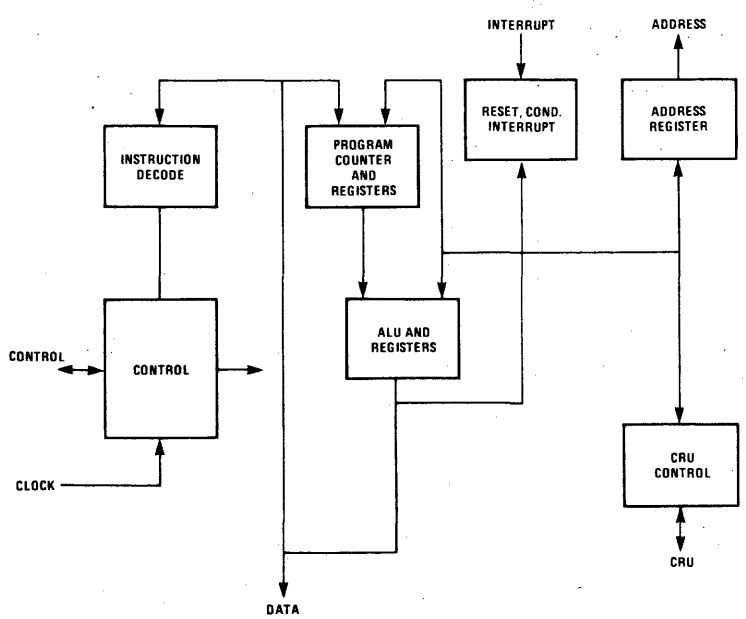

Pin Configuration

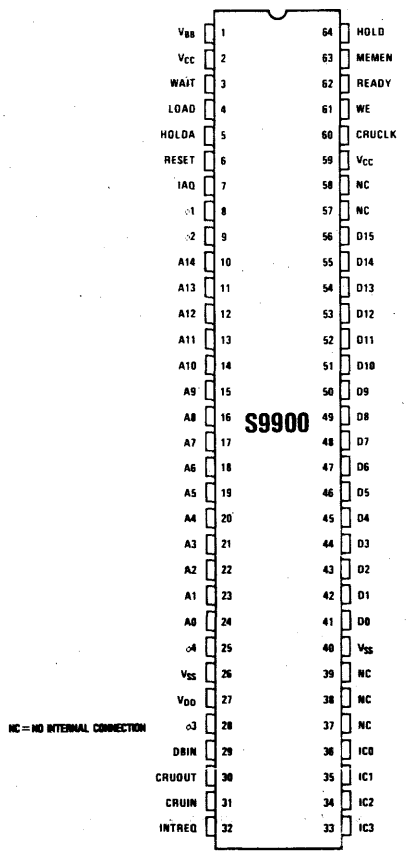

American Microsystems, Inc.

MICROPROCESSOR

© IC MASTER 1984

FAIRCHILD
A Schlumberger Company

F8 • F3870 • F6800 • F16000
Fairchild Microprocessors

Fairchild microcomputers cover the spectrum from 8-bit MOS to 16-bit bipolar microprocessors:

- **1-chip F387X microcomputer multi-chip F8 family with software and compatibility.**
- **2-chip F6802/6846 combination plus a powerful bus-oriented F6800 family well-supported by a large variety of peripheral devices.**
- **16-bit F9445 bipolar microprocessor.**
- **16-bit F16000 microprocessor family with 32-bit architecture.**
- **I^3L® logic family.**

FAIRCHILD F6800—The 8-bit MOS F6800 family offers a complete and continuously expanding range of microprocessor devices with a powerful instruction set. On the low end there is the F6802/6846 2-chip combination that features a processor chip combination with 128 bytes of on-board RAM, of which 32 bytes have a power-down feature.

The F6800 family is supported by a large array of peripheral devices, which include: ROM, RAM, EPROM, synchronous and asynchronous controller for data communications, timers, direct memory access (DMA), CRT controller, and the F68488 for the IEEE Standard Bus Controller.

FAIRCHILD F9445—The 16-bit F9445 is particularly well-suited to use in high-performance microprocessor systems. Implemented using Fairchild's I^3L bipolar technology and a sophisticated pipeline architecture, it offers very fast execution times, and operates at full speed over the military temperature and voltage ranges.

FAIRCHILD F16000—The 16-bit F16000 family, the CPU of which has a 32-bit internal structure, is designed to significantly reduce software costs while improving software quality.

FAIRCHILD I^3L LOGIC FAMILY—The F9414 four-chip data encryption set implements the data encryption standard (DES) algorithm (FIPS-46) with a data throughput of 75 ns per bit.

Microprocessor and MOS
Memory Division
450 National Avenue
Mountain View, CA 94042

© IC MASTER 1984

F387X Family

F3870 Single-Chip Microcomputer Series

64-Byte Scratchpad, 32 I/O Lines			
Device	**ROM**	**Power Supply**	**Comment**
F3870-1	1024 x 8	5V ± 10%	—
F3870-2	2048 x 8	5V ± 10%	—
F3870-3	3072 x 8	5V ± 10%	—
F3870-4	4096 x 8	5V ± 10%	—
F38E70-2	2048 x 8	5V ± 10%	EPROM Version of F3870
F38E70-2	2048 x 8	5V ± 10%	PROM Version of F3870

F 3872 Single-Chip Microcomputer Series

64-Byte Scratchpad, 32 I/O Lines, 64-Byte Executable RAM			
Device	**ROM**	**Power Supply ±10%**	**Comment**
F3872-1	1024 × 8	5V	—
F3872-2	2048 × 8	5V	—
F3872-3	3072 × 8	5V	—
F3872-4	4032 × 8	5V	—
F38L72-2	2048 × 8	5V	With Low-Power Stand-by RAM Option
F38L72-4	4032 × 8	5V	

Numbering System for Fairchild Single-Chip Microcomputers

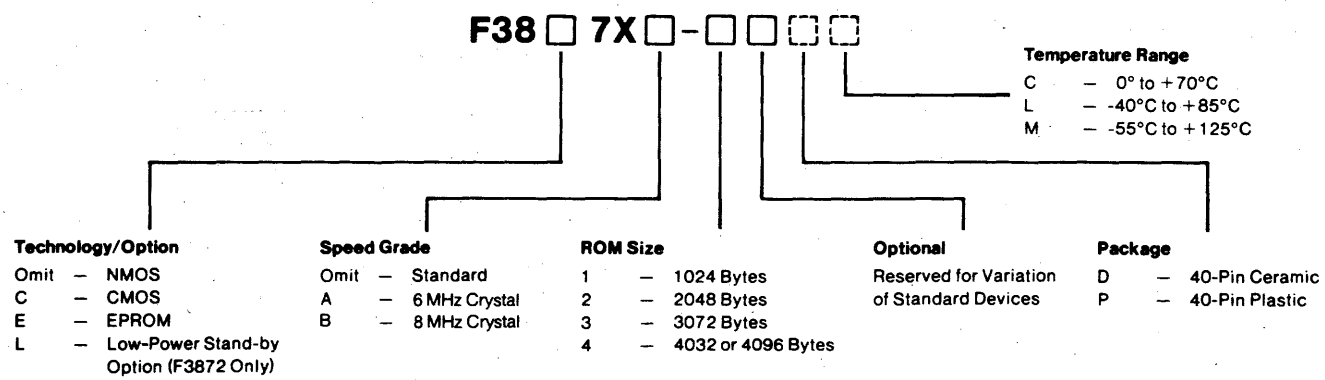

Cross Reference

Mostek	Fairchild	Mostek	Fairchild	Mostek	Fairchild	Mostek	Fairchild
MK 3870/10	F3870-1	MK 3870/22	F3872-2	MK 3870/40	F3870-4	MK 2875/42	F38L72-4
MK 3870/12	F3872-1	MK 3870/30	F3870-3	MK 3870/42	F3872-4	MK 38C70/20	F38E70-2
MK 3870/20	F3870-2	MK 3870/32	F3872-3	MK 3875/22	F38L72-2	MK 38P70/02	

Development Board

PEP 38—F38E70, F3872 Prototyping Module

F38E70 Programming Board—Allows programming of F38E70 on commercial PROM programmers that can program 2716-type EPROMs.

© IC MASTER 1984

F3870 Single-Chip Microcomputer

Description

The Fairchild single-chip microcomputer series offers a variety of circuits to serve the high-volume, cost-sensitive controller market. The F3870 is a complete 8-bit microcomputer on a single MOS integrated circuit. The F3870 can execute the F8 instruction set of more than 70 commands, allowing expansion into multi-chip configurations with software compatibility. The device features 64 bytes of scratchpad RAM, a programmable binary timer, 32 bits of I/O, a single +5 V power supply requirement, and a choice of 1K, 2K, 3K, or 4K of ROM.

Utilizing Fairchild's double-ion-implanted, N-channel silicon-gate technology and advanced circuit design techniques, the single-chip F3870 offers maximum cost effectiveness in a wide range of control and logic replacement applications.

- **Single-Chip Microcomputer**
- **Software-Compatible with F8 Family**
- **1024-, 2048-, 3072-, or 4096-Byte Programmable ROM**
- **64-Byte Scratchpad RAM**
- **32-Bit (4-Port) TTL-Compatible I/O**
- **Programmable Binary Timer:**
  - **Interval Timer Mode**
  - **Pulse Width Measurement Mode**
  - **Event Counter Mode**
- **External Interrupt**
- **Crystal, LC, RC, or External Time Base**
- **Low Power (275 mW, Typical)**
- **Single +5 V ± 10% Power Supply**

F3870 Architecture

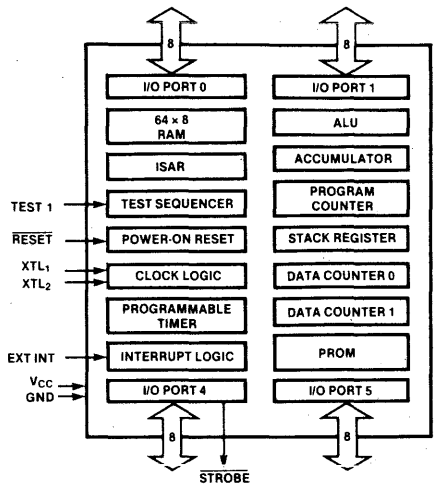

F38E70 Single-Chip Microcomputer

Description

The Fairchild single-chip microcomputer series offers a variety of circuits for the high-volume, cost-sensitive markets. The F38E70 is a complete 8-bit microcomputer on a single MOS integrated circuit. The F38E70 is functionally identical to the F3870, except the F38E70 has 2K bytes of EPROM in place of 2K bytes of ROM. The F38E70 can execute the F8 instruction set of more than 70 commands. The device features 2048 bytes of EPROM, 64 bytes of scratchpad RAM, a programmable binary timer, 32 bits of I/O, and a single +5 V power supply requirement.

Utilizing Fairchild's double-ion-implant, N-channel technology and advanced circuit design techniques, the single-chip F38E70 offers maximum cost-effectiveness in many low-to-medium volume systems. When production volume requires large quantities, the transition to the mask-programmed F3870 is very straightforward, with no circuit design changes.

- **Single-Chip Microcomputer**
- **Software-Compatible with F8 Family**
- **2048-Byte EPROM (F38E70-2)**
- **64-Byte Scratchpad RAM**
- **32-Bit (4-Port) TTL-Compatible I/O**
- **Programmable Binary Timer**
  - **Interval Timer Mode**
  - **Pulse Width Measurement Mode**
  - **Event Counter Mode**
- **External Interrupt**
- **Crystal, LC, RC, External, or Internal Time Base**
- **Low Power (375 mW Typical)**
- **Single +5 V ± 10% Power Supply**
- **Simple EPROM Programming**

F38E70 Architecture

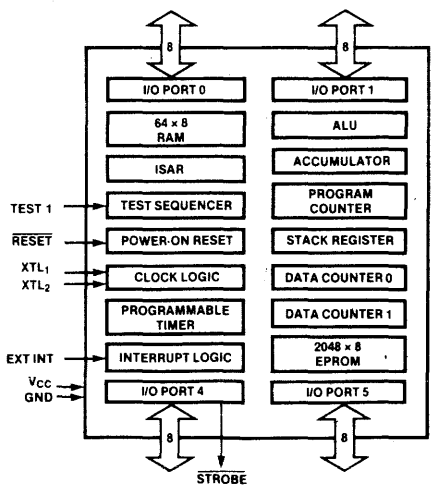

© IC MASTER 1984

Controller Products

F3850	CPU with 64 bytes of RAM and two 8-bit bidirectional I/O ports
F3851A	PSU with two 8-bit bidirectional I/O ports and 1K bytes of FAIRBUG bootstrap debugging program
F3851	PSU with two 8-bit bidirectional I/O ports and 1K bytes of user-programmable mask ROM
F3853	Memory interface for static RAM or ROM
F3856	PSU with two 8-bit bidirectional I/O ports and 2K bytes of user-programmable mask ROM, and an on-board binary timer
F3856A	PSU with two 8-bit bidirectional I/O ports and 2K bytes of KD-BUG monitor program ROM
F3861A F3861B F3861C F3861D F3861E	PIO with two 8-bit bidirectional I/O ports and a software-programmable polynomial timer
F3871E F3871F F3871G F3871H	PIO with two 8-bit bidirectional I/O ports and an F3870-type, software-programmable binary timer

F8 FAMILY ORGANIZATION

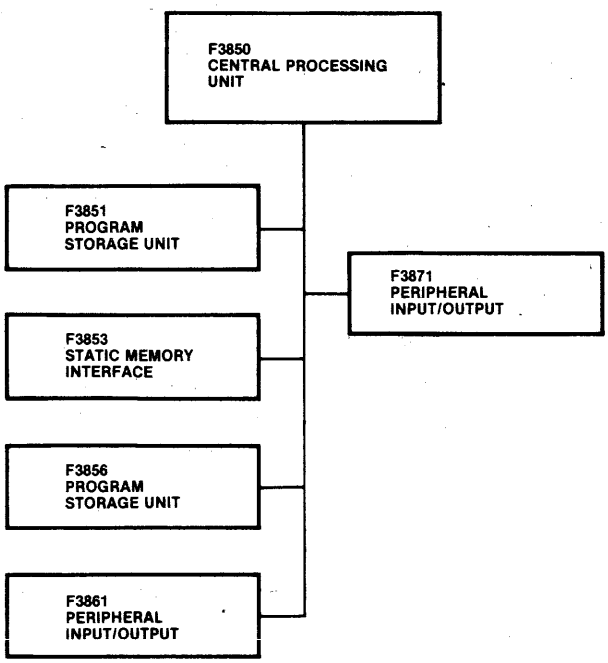

© IC MASTER 1984

Product Listing

Device No.	Description	Device No.	Description	Device No.	Description
F6800P	MPU	F6820S	PIA	F6847P	VDG
F6800CP	MPU	F6821P	PIA	F6847S	VDG
F6800S	MPU	F6821S	PIA	F6850P	ACIA
F6800CS	MPU	F68A21P	PIA	F6850S	ACIA
F68A00P	MPU	F68A21S	PIA	F68A50P	ACIA
F68A00S	MPU	F68B21P	PIA	F68A50S	ACIA
F68B00P	MPU	F68B21S	PIA	F68B50P	ACIA
F68B00S	MPU	F6840P	PIM	F68B50S	ACIA
F6802P	MPU	F6840S	PIM	F6852P	SSDA
F6802S	MPU	F68A40P	PIM	F6852S	SSDA
F6882P	MPU	F68A40S	PIM	F68A52P	SSDA
F6882S	MPU	F68B40P	PIM	F68A52S	SSDA
F6808P	MPU	F68B40S	PIM	F68B52P	SSDA
F6808S	MPU	F6844P	DMAC	F68B52S	SSDA
F6809P	MPU	F68A44P	DMAC	F6854P	ADLC
F68A09P	MPU			F6854S	ADLC
F68B09P	MPU	F6845P	CRT Controller	F68A54P	ADLC
F6809E	MPU	F68A45P	CRT Controller	F68A54S	ADLC
F68A09E	MPU	F68B45P	CRT Controller	F68B54P	ADLC
F68B09E	MPU	F6845AP	CRT Controller	F68B54S	ADLC
F6810P	RAM				
F6810S	RAM				
F68A10P	RAM				
F68A10S	RAM	F68A45AP	CRT Controller	F6856P	SPCC
F68B10P	RAM	F68B45AP	CRT Controller	F6856S	SPCC
F68B10S	RAM	F6846P	COMBO	F3846P	SPCC
F6820P	PIA	F6846S	COMBO	F3846S	SPCC
				F68456P	SPCC
				F68456S	SPCC
				F68488P	GPIA
				F68488S	GPIA

Development Board

PEP 68—F6802, F6809 Prototyping Module

ROM Family

Fairchild	Equivalent EPROM	Fairchild	Equivalent EPROM
16K ROM	16K EPROM	64K ROM 24-Pin	64K ROM 24-Pin
F35316	2716	F3564	68764
F68316	2716	F3565	68764
		F3566	68766
32K ROM	32K EPROM	64K ROM 28-Pin	64K ROM 28-Pin
F3533	2732	F3568	2764
F68332	2732	F3569	2764
F3532	2732	F3570	2764

© IC MASTER 1984

FAIRCHILD
A Schlumberger Company

F6809/F68A09/F68B09 Central Processing Unit

Description

The Fairchild F6809 8-bit Microprocessor is an advanced, high-performance member of the F6800 family. It offers greater throughput, improved byte efficiency, and increased adaptability to various software disciplines, including position-independent code, re-entrancy, recursion, block structuring, and high-level language generation. The F6809 is compatible with all F6800 peripheral devices and is upward source code compatible with F6800-series microprocessors. The device is available in three frequency ranges: 1.0 MHz (F6809), 1.5 MHz (F68A09), and 2.0 MHz (F68B09).

Architectural improvements, such as additional 16-bit registers and dual 8-bit data paths, allow for powerful enhancements to the instruction set and addressing capabilities.

- **Compatible with Entire F6800 Family**
  - **—Hardware Interfaces with all F6800 Peripherals**
  - **—Software Has Upward-Compatible Instruction Set and Addressing Modes**
- **Two 16-Bit Index Registers**
- **Two Indexable 16-Bit Stack Pointers**
- **Two 8-Bit Accumulators Can Be Concatenated to Form One 16-Bit Accumulator**
- **Direct Page Register Allows Direct Addressing Throughout Memory Map**
- **Single +5 V Supply**
- **On-Chip Oscillator**
- **MRDY Input Extends Data Access Time for Use with Slow Memory**
- **DMA/BREQ Allows Access to Bus for DMA and Memory Refresh**
- **Fast Interrupt Request (FIRQ) Stacks Only Program Counter and Condition Code Register**
- **Interrupt Acknowledge Output Allows Vectoring by Device**
- **Sync Acknowledge Output Allows for Synchronization to External Event**
- **16-Bit Arithmetic (ADD, SUBTRACT, COMPARE, LOAD, STORE)**
- **8 × 8 Unsigned Multiply**
- **Transfer/Exchange all Registers**
- **Push/Pull all Registers**
- **Ten Addressing Modes**
- **Expanded Indexed Addressing, Accumulator or up to 16-Bit Offset, Auto-Increment/Decrement by One or Two**
- **True Indirect Addressing**
- **Load-Effective Address**

Block Diagram

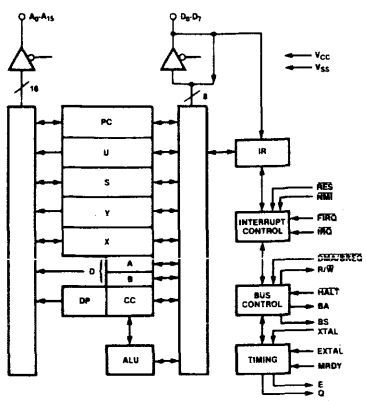

F6809E/F68A09E/F68B09E Central Processing Unit

Description

The Fairchild F6809E 8-bit microprocessor is an advanced, high-performance member of the F6800 family. It offers greater throughput, improved byte efficiency, and increased adjustability to various software disciplines, including position-independent code, re-entrancy, recursion, block structuring, and high-level language generation. The F6809E is compatible with all F6800 peripheral devices and is upward source code compatible with F6800-series microprocessors. It is available in three frequency ranges: 1.0 MHz (F6809E); 1.5 MHz (F68A09E); 2.0MHz (F68B09E).

Architectural improvements, such as additional 16-bit registers and dual 8-bit data paths, allow for powerful enhancements to the instruction set and addressing capabilities.

External clock inputs are provided on the F6809E to allow synchronization with peripherals, systems, or other MPUs.

- **Compatible with Entire F6800 Family**
  - **· Hardware Interfaces with All F6800 Peripherals**
  - **· Software Has Upward-Compatible Instruction Set and Addressing Modes**
- **Two 16-Bit Index Registers**
- **Two Indexable 16-Bit Stack Registers**
- **Two 8-bit Accumulators Can Be Connected to Form One 16-Bit Accumulator**
- **Direct Page Register Allows Direct Addressing Throughout Memory Map**
- **External E and Q Clock Inputs Allow Synchronization**
- **TSC Input Controls Internal Bus Buffers**
- **LIC Output Indicates Opcode Fetch**
- **AVMA Output Allows Efficient use of Common Resources in a Microprocessor System**
- **Fast Interrupt Request Input Stacks Only Program Counter and Condition Code Register**
- **Interrupt Acknowledge Output Allows Vectoring by Device**
- **Sync Acknowledge Output Allows for Synchronization to External Event**
- **Single Bus-Cycle Reset**
- **Single +5 V Supply**
- **Early Address Valid Allows Use with Slower Memories**
- **Early Write-Data for Dynamic Memories**
- **10 Addressing Modes**
- **True Indirect Addressing**
- **Expanded Indexed Addressing**
- **1464 Instructions with Unique Addressing Modes**
- **Recognizes 8x8 Unsigned Multiply**
- **16-Bit Arithmetic**

Block Diagram

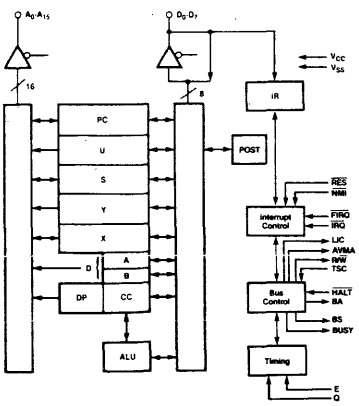

Fairchild

MICROPROCESSOR

© IC MASTER 1984

F6845/F6845A CRT Controller

Description

The Fairchild F6845 CRT Controller (CRTC) provides an interface between a microprocessor (MPU) and a raster scan CRT device. The CRTC is used in microprocessor-based controller systems for CRT terminals in stand-alone or multiterminal configurations, including smart, programmable CRT terminals, video games, and information displays.

The F6845 CRTC is designed with an optimum hardware/software balance that achieves integration of all key functions and maintains flexibility. All keyboard functions, read/write operations, cursor movements, and editing are under microprocessor control. The F6845 provides video timing and refresh memory addressing.

- **Monochrome or Color CRT Applications**
- **Used with "Glass-Teletype", Smart, Programmable, Intelligent CRT Terminals; Video Games; Information Displays**
- **Alphanumeric, Semigraphic, and Full Graphic Capability**
- **Fully Programmable via Processor Data Bus; Timing can be Generated for Almost Any Alphanumeric Screen Format (e.g., 80 x 24, 72 x 64, and 132 x 20)**
- **Single +5 V Supply**
- **F6800-Compatible Bus Interface**
- **TTL-Compatible Inputs and Outputs**
- **Start Address Register Provides Hardware Scroll (By Page, Line, or Character)**
- **Programmable Cursor Register Allows Control of Cursor Format and Blink Rate**
- **Light Pen Register**
- **Refresh (Screen) Memory Can Be Multiplexed Between the CRTC and the MPU, Thus Removing the Requirements for Line Buffers or External DMA Devices**
- **Programmable Interlace or Non-Interlace Scan Modes**
- **14-Bit Refresh Address Allows up to 16K of Refresh Memory for Use in Character or Semigraphic Displays**
- **5-Bit Row Address Allows up to 32 Scan-Line Character Blocks**
- **512K Address Space is Available for Graphics System by Using Both the Refresh and Row Addresses**
- **Refresh Addresses are Provided During Retrace, Allowing the CRTC to Provide Row Addresses to Refresh Dynamic RAM**
- **Programmable Skew for Cursor and Display Enable (DE)**

Signal Functions

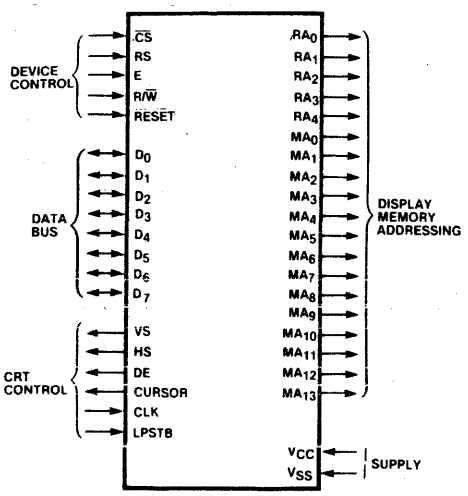

F6856 Synchronous Protocol Communications Controller

Description

The F6856 Synchronous Protocol Communications Controller (SPCC) is a monolithic n-channel MOS LSI circuit designed to satisfy the major interface requirements of the bit-oriented protocol (BOP) and byte-control protocol (BCP). The SPCC converts parallel data from the CPU into a continuous serial data stream for transmission. Simultaneously, it converts received serial data to parallel data for the CPU. The SPCC is organized to interface with either an 8- or 16-bit bidirectional data bus, is fully TTL-compatible, and operates from a single +5 V supply.

- **F6800 and 8080 Bus Compatible**
- **Data Rate From DC to 1M BPS**
- **Bit-Oriented Line Control Protocols: SDLC, ADCCP, HDLC**
  - **Automatic Detection and Generation of Special Control Sequences (e.g., Flag, Abort, Go-Ahead)**
  - **Zero Insertion and Deletion**
  - **Primary or Secondary Station Select**
  - **Global Address**
  - **Automatic Extended Address**
  - **One or Two Control Bytes**
  - **Data Character Length From Five to Eight Bits with 1- to 8-Bit Residual Last Character**
  - **CCITT-CRC Error Detection**
  - **Interrupt on End of Message**
  - **IBM Retail Store Loop Mode**
- **Byte Control Protocol: IBM BISYNC**
  - **Special Character Generation: DLE, SYNC**
  - **Special Character Detection: DLE, SYNC, SOH, STX, ITB, ETB, ETX**
  - **ASCII or EBCDIC**
  - **Non-Transparent Mode and Transparent Mode**
  - **8-Bit Character Length**
  - **Automatic Fill Character Insertion with Selectable Stripping**
  - **CCITT or CRC-16 Error Detection**
  - **Interrupt on End of Message**
- **Byte Control Protocols: DDCMP and Other Programmable SYNC Characters**
  - **5- to 8-Bit Character Length**
  - **Selectable CRC Error Detection**
  - **Automatic Fill Character Insertion with Selectable Stripping**
- **Directly Addressable Parameter Control Registers: Mode, SYNC/Address, Transmitter Control, and Receiver Control**
- **Separate Addressable Status and Data Registers for Receiver and Transmitter**
- **Modem Handshake Signals: $\overline{RTS}$, $\overline{CTS}$, $\overline{DTR}$, $\overline{DSR}$, and $\overline{CD}$**
- **NRZ or NRZI (Zero-Complementing)**
- **Full- or Half-Duplex Operation**
- **Self-Test Loop Mode**
- **8- or 16-Bit Bidirectional 3-State Data Bus**
- **TTL-Compatible**
- **Single +5 V Supply**
- **40-Pin Package**

© IC MASTER 1984

F6800 MICROPROCESSING UNIT (MPU)

GENERAL DESCRIPTION — The F6800 is a monolithic 8-bit microprocessor forming the central control function for Fairchild's F6800 family. Compatible with TTL, the F6800, as with all F6800 system parts, requires only one 5.0 V power supply and no external TTL devices for bus interface.

The F6800 is capable of addressing 65K bytes of memory with its 16-bit address lines. The 8-bit data bus is bi-directional as well as 3-state, making direct memory addressing and multiprocessing applications possible. Two temperature ranges are available. The F6800 is 0°C to 70°C and the F6800C is −40°C to +85°C.

- 8-BIT PARALLEL PROCESSING
- BI-DIRECTIONAL DATA BUS
- 16-BIT ADDRESS BUS – 65K BYTES OF ADDRESSING
- 72 INSTRUCTIONS – VARIABLE LENGTH
- SEVEN ADDRESSING MODES – DIRECT, RELATIVE, IMMEDIATE, INDEXED, EXTENDED, IMPLIED AND ACCUMULATOR
- VARIABLE LENGTH STACK
- VECTORED RESTART
- MASKABLE INTERRUPT VECTOR
- SEPARATE NON-MASKABLE INTERRUPT – INTERNAL REGISTERS SAVED IN STACK
- SIX INTERNAL REGISTERS – TWO ACCUMULATORS, INDEX REGISTER, PROGRAM COUNTER, STACK POINTER AND CONDITION CODE REGISTER
- DIRECT MEMORY ADDRESSING (DMA) AND MULTIPLE PROCESSOR CAPABILITY
- CLOCK RATES 1 MHz, 1.5 MHz, 2 MHz
- SIMPLE BUS INTERFACE WITHOUT TTL
- HALT AND SINGLE INSTRUCTION EXECUTION CAPABILITY
- TWO TEMPERATURE RANGES – F6800 0°C TO 70°C
  F6800C −40°C TO +85°C

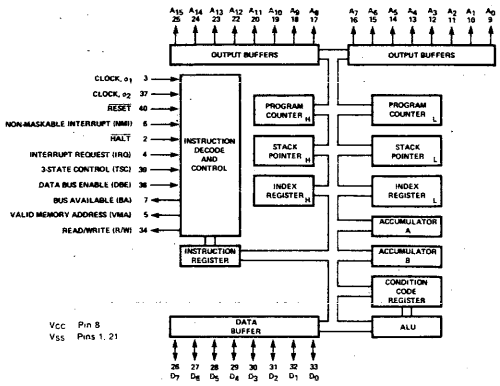

F6800 MPU

F6802/F6882 WITH CLOCK AND RAM

GENERAL DESCRIPTION — The F6802/F6882 is a monolithic 8-bit microprocessor that contains all the registers and accumulators of the F6800, plus an interval clock oscillator and driver on the same chip. It also has 128 bytes of RAM on-board, located at hex addresses $0000 to $007F.

The F6802/F6882 is completely software-compatible with the F6800 microprocessor and the entire F6800 family of parts.

- ON-CHIP CLOCK CIRCUIT
- 128 × 8-BIT ON-CHIP RAM
- 8 BYTES OF RAM ARE RETAINABLE ON THE F6882
- 32 BYTES OF RAM ARE RETAINABLE ON THE F6802
- SOFTWARE-COMPATIBLE WITH THE F6800
- STANDARD TTL-COMPATIBLE INPUTS AND OUTPUTS
- 8-BIT BIDIRECTIONAL DATA BUS
- 16-BIT MEMORY ADDRESSING
- INTERRUPT CAPABILITY

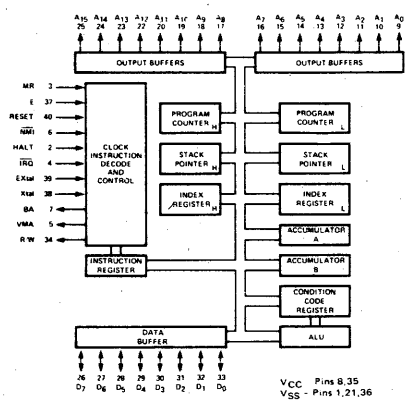

F6802/F6882 MPU

F6808 MPU WITH CLOCK

GENERAL DESCRIPTION — The F6808 is a monolithic 8-bit microprocessor that contains all the registers and accumulators of the present F6800 plus an internal clock oscillator and driver on the same chip.

The F6808 is completely software compatible with the F6800 as well as the entire F6800 family of parts. The F6808 is expandable to 65K words.

This very cost-effective MPU allows the designer to use the F6808 in consumer as well as industrial applications without sacrificing industrial specifications.

- ON-CHIP CLOCK CIRCUIT
- SOFTWARE COMPATIBLE WITH THE F6800
- EXPANDABLE TO 65K WORDS
- STANDARD TTL COMPATIBLE INPUTS AND OUTPUTS
- 8-BIT WORD SIZE
- 16-BIT MEMORY ADDRESSING
- INTERRUPT CAPABILITY

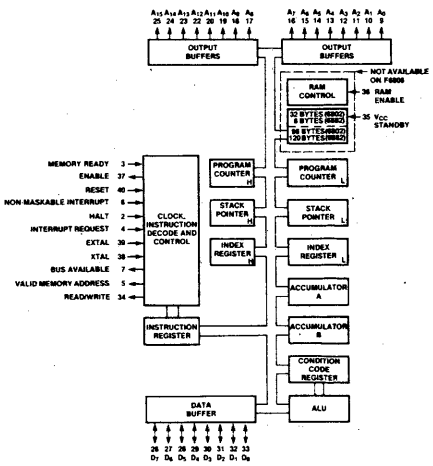

F6808 MPU

F6810 128 × 8-BIT RANDOM ACCESS MEMORY (RAM)

GENERAL DESCRIPTION — F6810 is a byte-organized memory designed for use in bus-organized systems. It is fabricated with N-channel silicon-gate technology. For ease of use, the device operates from a single power supply, has compatibility with TTL and DTL, and needs no clocks or refreshing because of static operation.

The memory is compatible with the F6800 Microcomputer Family, providing random storage in byte increments. Memory expansion is provided through multiple Chip Select inputs.

- ORGANIZED AS 128 BYTES OF EIGHT BITS
- STATIC OPERATION
- BI-DIRECTIONAL 3-STATE DATA INPUT/OUTPUT
- SIX CHIP SELECT INPUTS (FOUR ACTIVE LOW, TWO ACTIVE HIGH)
- SINGLE 5 V POWER SUPPLY
- TTL COMPATIBLE
- MAXIMUM ACCESS TIME = 350 ns – F6810-1
  450 ns – F6810

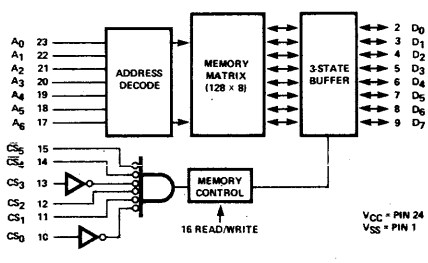

F6810 RAM

© IC MASTER 1984

F6821 PERIPHERAL INTERFACE ADAPTER (PIA)

GENERAL DESCRIPTION – The F6821 Peripheral Interface Adapter provides the universal means of interfacing peripheral equipment to the F6800 Microprocessing Unit (MPU). This device is capable of interfacing the MPU to peripherals through two 8-bit bi-directional peripheral data buses and four control lines. No external logic is required for interfacing to most peripheral devices.

The functional configuration of the PIA is programmed by the MPU during system initialization. Each of the peripheral data lines can be programmed to act as an input or output, and each of the four control/interrupt lines may be programmed for one of several control modes. This allows a high degree of flexibility in the overall operation of the interface.

- 8-BIT BI-DIRECTIONAL DATA BUS FOR COMMUNICATION WITH THE MPU
- TWO BI-DIRECTIONAL 8-BIT BUSES FOR INTERFACE TO PERIPHERALS
- TWO PROGRAMMABLE CONTROL REGISTERS
- TWO PROGRAMMABLE DATA DIRECTION REGISTERS
- FOUR INDIVIDUALLY-CONTROLLED INTERRUPT INPUT LINES; TWO USABLE AS PERIPHERAL CONTROL OUTPUTS
- HANDSHAKE CONTROL LOGIC FOR INPUT AND OUTPUT PERIPHERAL OPERATION
- HIGH IMPEDANCE 3-STATE AND DIRECT TRANSISTOR DRIVE PERIPHERAL LINES
- PROGRAM CONTROLLED INTERRUPT AND INTERRUPT DISABLE CAPABILITY
- CMOS DRIVE CAPABILITY ON SIDE A PERIPHERAL LINES

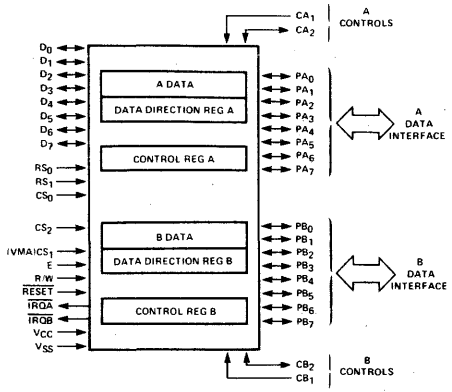

F6821 PIA

F6840 PROGRAMMABLE TIMER (PTM)

GENERAL DESCRIPTION—The F6840 is a programmable subsystem component of the F6800 family designed to provide variable system time intervals.

The F6840 has three 16-bit binary counters, three corresponding control registers and a status register. These counters are under software control and may be used to cause system interrupts and/or generate output signals. The F6840 may be utilized for such tasks as frequency measurements, event counting, interval measuring and similar tasks. The device may be used for square wave generation, gated delay signals, single pulses of controlled duration, and pulse width modulation as well as system Interrupts.

- OPERATES FROM A SINGLE 5 VOLT POWER SUPPLY
- FULLY TTL COMPATIBLE
- SINGLE SYSTEM CLOCK REQUIRED (ENABLE)
- SELECTABLE PRESCALER ON TIMER 3 CAPABLE OF A 4 MHz INPUT
- PROGRAMMABLE INTERRUPTS ($\overline{IRQ}$) OUTPUTS TO MPU
- READABLE DOWN COUNTER INDICATES COUNTS TO GO TO TIME-OUT
- SELECTABLE GATING FOR FREQUENCY OR PULSE-WIDTH COMPARISON
- $\overline{RESET}$ INPUT
- THREE ASYNCHRONOUS EXTERNAL CLOCK AND GATE/TRIGGER INPUTS INTERNALLY SYNCHRONIZED
- THREE MASKABLE OUTPUTS

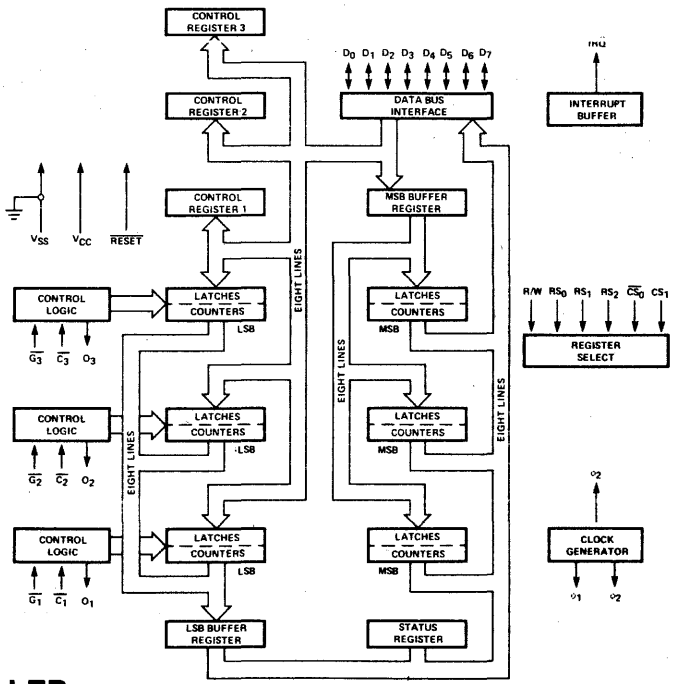

F6840 PTM

F6844 DIRECT MEMORY ACCESS CONTROLLER

GENERAL DESCRIPTION — The F6844 Direct Memory Access Controller (DMAC) transfers data directly between memory and peripheral device controllers. In bus-organized systems, such as those based on the F6800 microprocessor, the DMAC, rather than the MPU, controls the address and data buses.

The DMAC bus interface includes select, read/write interrupt, transfer request/grant, and bus interface logic to permit data transfer over an 8-bit bidirectional data bus. The F6844 functional configuration is programmed through the data bus. The internal structure provides for control and handling of four individual channels, each of which is separately configured. Programmable control registers provide control for the transfer location and length, individual channel control and transfer mode configuration, priority of servicing, data chaining, and interrupt control. Status and control lines serve the peripheral controllers.

The mode of transfer for each channel can be programmed as cycle-stealing or burst transfer.

Typical applications include use with the F6856 Synchronous Protocol Communications Controller, the F6854 Advanced Data Link Controller, and the F68488 IEEE-488 Bus Controller.

- FOUR DMA CHANNELS, EACH HAVING A 16-BIT ADDRESS REGISTER AND A 16-BIT BYTE COUNT REGISTER
- 2M BYTE/SEC MAXIMUM DATA TRANSFER RATE
- SELECTION OF FIXED OR ROTATING PRIORITY SERVICE CONTROL
- SEPARATE CONTROL BITS FOR EACH CHANNEL
- DATA CHAIN FUNCTION
- ADDRESS INCREMENT OR DECREMENT UPDATE
- PROGRAMMABLE INTERRUPTS AND DMA END TO PERIPHERAL CONTROLLERS

Block Diagram

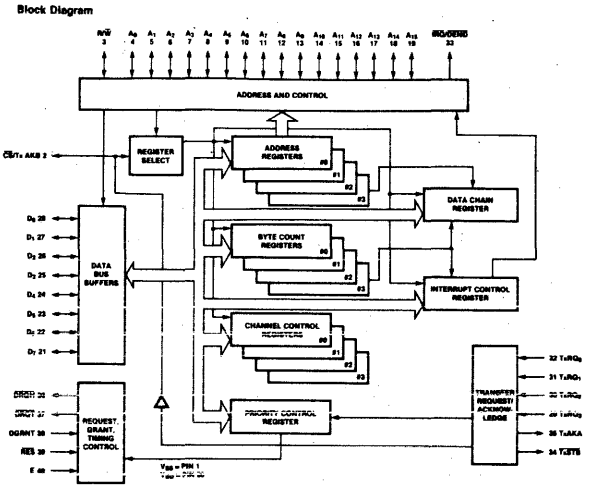

F6844 DMAC

© IC MASTER 1984

FAIRCHILD
A Schlumberger Company

F6846 ROM-I/O-TIMER

GENERAL DESCRIPTION–The F6846 combination chip provides the means, in conjunction with the F6802, to develop a basic 2-chip microcomputer system. The F6846 consists of 2048 bytes of mask programmable ROM, an 8-bit bi-directional data port with control lines, and a 16-bit programmable timer-counter.

This device is capable of interfacing with the F6802 (basic F6800, clock and 128 bytes of RAM) as well as the F6800 if desired. No external logic is required to interface with most peripheral devices.

- **2048 8-BIT BYTES OF MASK-PROGRAMMABLE ROM**
- **8-BIT BI-DIRECTIONAL DATA PORT FOR PARALLEL INTERFACE PLUS TWO CONTROL LINES**
- **PROGRAMMABLE INTERVAL TIMER-COUNTER FUNCTIONS**
- **PROGRAMMABLE I/O PERIPHERAL DATA, CONTROL AND DIRECTION REGISTERS**
- **COMPATIBLE WITH THE COMPLETE F6800 MICROCOMPUTER PRODUCT FAMILY**
- **TTL-COMPATIBLE DATA AND PERIPHERAL LINES**
- **SINGLE 5 VOLT POWER SUPPLY**

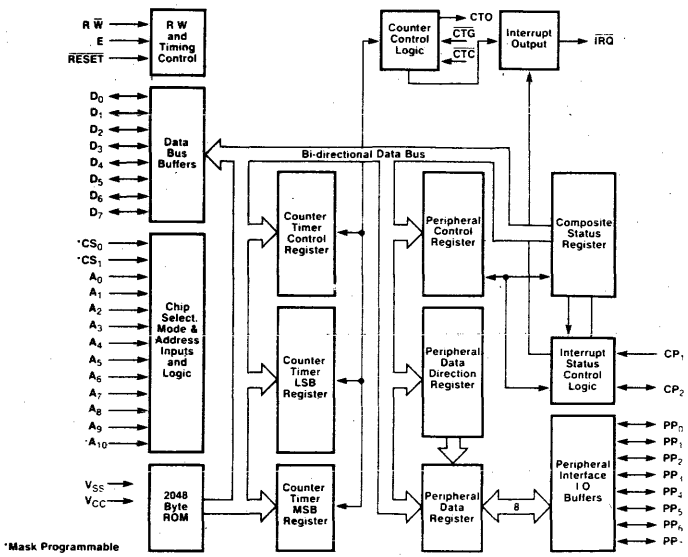

F6846 RIOT

F68488 GENERAL PURPOSE INTERFACE ADAPTER (GPIA)

GENERAL DESCRIPTION—The F68488 GPIA provides the means to interface between the IEEE 488 standard instrument bus and the F6800. The 488 instrument bus provides a means for controlling and moving data from complex systems of multiple instruments.

The F68488 will automatically handle all handshake protocol needed on the instrument bus.

- **SINGLE OR DUAL PRIMARY ADDRESS RECOGNITION**
- **SECONDARY ADDRESS CAPABILITY**
- **COMPLETE SOURCE AND ACCEPTOR HANDSHAKES**
- **PROGRAMMABLE INTERRUPTS**
- **RFD HOLD-OFF TO PREVENT DATA OVERRUN**
- **OPERATES WITH DMA CONTROLLER**
- **SERIAL AND PARALLEL POLLING CAPABILITY**
- **TALK-ONLY OR LISTEN-ONLY CAPABILITY**
- **SELECTABLE AUTOMATIC FEATURES TO MINIMIZE SOFTWARE**
- **SYNCHRONIZATION TRIGGER OUTPUT**
- **F6800 BUS COMPATIBLE**

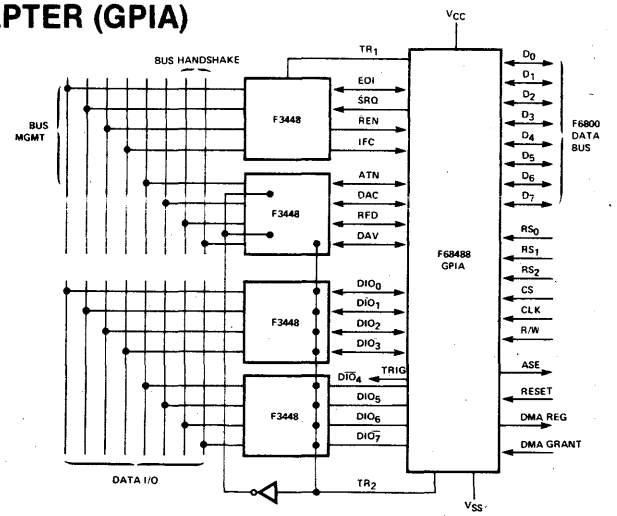

F68488 GPIA INTERFACE

F6850 ASYNCHRONOUS COMMUNICATIONS INTERFACE ADAPTER (ACIA)

GENERAL DESCRIPTION – The F6850 Asynchronous Communications Interface Adapter (ACIA) provides the data formatting and control to interface serial asynchronous data communications information to bus organized systems such as the F6800 Microprocessing Unit.

The bus interface of the F6850 includes select, enable, read/write, interrupt and bus interface logic to allow data transfer over an 8-bit bi-directional data bus. The parallel data of the bus system is serially transmitted and received by the asynchronous data interface, with proper formatting and error checking. The functional configuration of the ACIA is programmed via the data bus during system initialization. A programmable Control Register provides variable word lengths, clock division ratios, transmit control, receive control, and interrupt control. For peripheral or modem operation, three control lines are provided. These lines allow the ACIA to interface directly with the F6860 0-600 bps digital modem.

- **8 AND 9-BIT TRANSMISSION**
- **OPTIONAL EVEN AND ODD PARITY**
- **PARITY, OVERRUN AND FRAMING ERROR CHECKING**
- **PROGRAMMABLE CONTROL REGISTER**
- **OPTIONAL ÷1, ÷16, AND ÷64 CLOCK MODES**
- **UP TO 500 kbps TRANSMISSION**
- **FALSE-START BIT DELETION**
- **PERIPHERAL/MODEM CONTROL FUNCTIONS**
- **DOUBLE BUFFERED**
- **ONE OR TWO STOP BIT OPERATION**

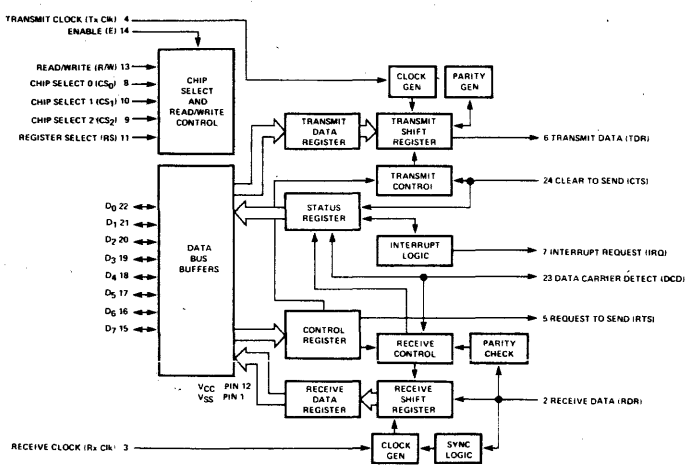

F6850 ACIA

© IC MASTER 1984

F6852 SYNCHRONOUS SERIAL DATA ADAPTER (SSDA)

GENERAL DESCRIPTION – The F6852 Synchronous Serial Data Adapter provides a bi-directional serial interface for synchronous data information interchange. It contains interface logic for simultaneously transmitting and receiving standard synchronous communications characters in bus organized systems such as the F6800 Microprocessor systems.

The bus interface of the F6852 includes Select, Enable, Read/Write, Interrupt, and bus interface logic to allow data transfer over an 8-bit bi-directional data bus. The parallel data of the bus system is serially transmitted and received by the synchronous data interface with synchronization, fill character insertion/deletion, and error checking. The functional configuration of the SSDA is programmed via the data bus during system initialization. Programmable control registers provide control for variable word lengths, transmit control, receive control, synchronization control, and interrupt control. Status, timing and control lines provide peripheral or modem control.

Typical applications include floppy disk controllers, cassette or cartridge tape controllers, data communications terminals, and numerical control systems.

- PROGRAMMABLE INTERRUPTS FROM TRANSMITTER, RECEIVER, AND ERROR DETECTION LOGIC
- CHARACTER SYNCHRONIZATION ON ONE OR TWO SYNC CODES
- EXTERNAL SYNCHRONIZATION AVAILABLE FOR PARALLEL-SERIAL OPERATION
- PROGRAMMABLE SYNC CODE REGISTER
- UP TO 600 KBPS TRANSMISSION
- PERIPHERAL/MODEM CONTROL FUNCTIONS
- THREE BYTES OF FIFO BUFFERING ON BOTH TRANSMIT AND RECEIVE
- SEVEN, EIGHT, OR NINE BIT TRANSMISSION
- OPTIONAL EVEN AND ODD PARITY
- PARITY, OVERRUN, AND UNDERFLOW STATUS

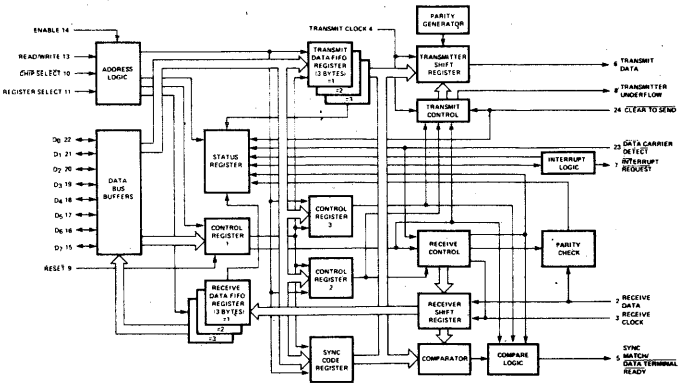

Vcc Pin 12
Vss Pin 1

F6852 SSDA

F6854 ADVANCED DATA LINK CONTROLLER (ADLC)

GENERAL DESCRIPTION — The F6854/F68A54 Advanced Data Link Controllers (ADLCs) perform the complex MPU/data communication link function for the Advanced Data Communication Control Procedure (ADCCP), High-level Data Link Control (HDLC) and Synchronous Data Link Control (SDLC) standards. The ADLC provides key interface requirements with improved software efficiency. The ADLC is designed to provide the data communications interface for both primary and secondary stations in stand-alone, polling and loop configurations.

- F6800 COMPATIBLE
- PROTOCOL FEATURES
  - AUTOMATIC FLAG DETECTION AND SYNCHRONIZATION
  - ZERO INSERTION AND DELECTION
  - AUTOMATIC ADDRESS FIELD EXTENSION (OPTIONAL)
  - EXTENDED CONTROL FIELD (OPTIONAL)
  - AUTO EXTENDABLE LOGIC CONTROL FIELD (OPTIONAL)
  - VARIABLE WORD LENGTH INFORMATION FIELD (5-, 6-, 7-, OR 8-BIT)
  - AUTOMATIC FRAME CHECK SEQUENCE GENERATION AND CHECK
  - ABORT DETECTION AND TRANSMISSION
  - IDLE DETECTION AND TRANSMISSION
- MODEM/DATA CHANNEL CONTROL LINES
- LOOP MODE
- SINGLE 5 V POWER SUPPLY
- ENHANCED SPEED OPTIONS

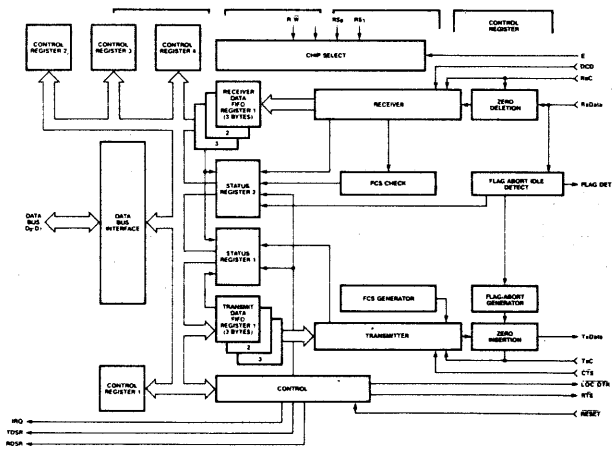

F6854 ADLC

F35316/F68316 2048 × 8 ROM

GENERAL DESCRIPTION — The F35316/F68316 is a mask-programmable byte-organized MOS Read Only Memory (ROM) designed for use in bus-organized systems requiring non-volatile data storage. It is fabricated with n-channel silicon-gate technology. For ease of use, the F35316/F68316 operates from a single +5 V power supply, inputs and outputs are TTL and DTL compatible, and the device needs no clocks or refreshing because of its static operation.

The F35316/F68316 is compatible with the F6800, F8 and other microcomputer families providing read only storage in byte increments. To facilitate memory expansion, the device contains three programmable Chip Select inputs providing any combination of active HIGH or LOW or an optional DON'T CARE state coupled with output wired-OR capability. Chip select code and memory content are user defined and are fixed during the masking process.

The F35316/F68316 provides maximum circuit density, reliability and performance yet maintains low power dissipation and yields significant cost advantages over an EPROM approach.

- 2048 × 8 BIT BUS-COMPATIBLE ORGANIZATION
- FULLY STATIC OPERATION
- 3-STATE DATA OUTPUTS FOR WIRED-OR CAPABILITY
- MASK-PROGRAMMABLE CHIP SELECTS FOR SIMPLIFIED MEMORY EXPANSION
- SINGLE +5 V ±10% POWER SUPPLY
- TTL AND DTL-COMPATIBLE INPUTS
- MULTIPLE SPEED GRADES
  t_{ACC} = 250 ns, 300 ns (F35316)
  t_{ACC} = 350 ns, 450 ns, 500 ns (F68316)
- DIRECTLY COMPATIBLE WITH 2316E
- PIN COMPATIBLE WITH F2708 and F2716 EPROMs

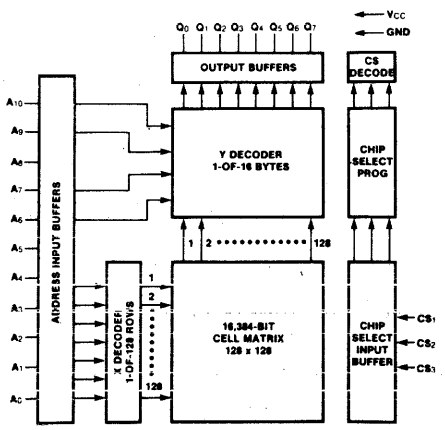

F35316/F68316 ROM

© IC MASTER 1984

F3532/F68332/F3533 4096 × 8-BIT READ ONLY MEMORY (ROM)

GENERAL DESCRIPTION — The F3532/F68332 and F3533 are 4096 × 8-bit mask-programmable read only memories (ROMs), fabricated with n-channel silicon gate technology. They are designed for use in bus-organized systems requiring non-volatile data storage. For ease of use, the F3532/F68332 and F3533 require only a single +5 V power supply, have TTL-compatible inputs and outputs, and, due to their static operation, need no clocking or refreshing.

Electrically identical, the F3532/F68332 and F3533 represent both JEDEC standard pinouts, thus providing compatibility with other available 32K ROMs and EPROMs. To facilitate memory expansion, these devices offer two programmable Chip Select inputs whose active levels are user defined.

The F3523-30/F3533-30 and F3532/F3533-35 are high speed devices, allowing interface with faster generations of NMOS microprocessors.

- **COMPLETELY STATIC OPERATION**
- **8-BIT BUS COMPATIBLE ORGANIZATION**
- **3-STATE OUTPUTS**
- **TWO-PROGRAMMABLE CHIP SELECT INPUTS**
- **SINGLE +5 V ± 10% SUPPLY**
- **FULLY TTL COMPATIBLE**
- **3 SPEED GRADES—t_{ACC} = 300, 350, 450 ns**
- **BOTH JEDEC STANDARD PINOUTS**
- **PIN COMPATIBLE WITH OTHER 32K ROMs AND EPROMs**

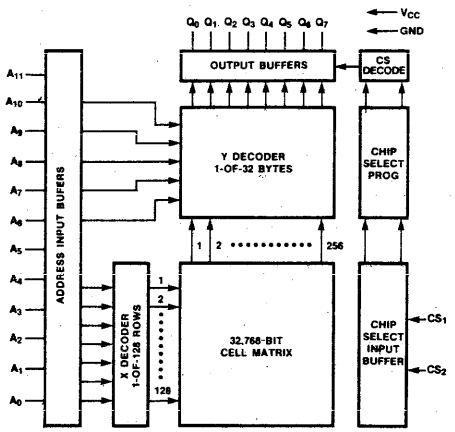

F3532/F68332/F3533 ROM

F3564 8192 × 8-BIT READ ONLY MEMORY (ROM)

GENERAL DESCRIPTION — The F3564 8192 × 8-bit (64K) mask-programmable read-only memory (ROM) is designed for use in bus-organized systems requiring non-volatile memory storage. Because of its high speed, it readily interfaces with all generations of NMOS microprocessors.

Fabricated with n-channel silicon-gate technology, the F3564 has industry-standard pinouts and is compatible with other available 24-pin 16K, 32K, and 64K ROMs and EPROMs.

- **ADDRESS LATCH FEATURE**
- **SINGLE 5 V POWER SUPPLY**
- **AUTOMATIC POWER-DOWN**
- **ACCESS TIME (t_{AA}) OF 250 ns FOR F3564-25 AND 350 ns FOR F3564-35**
- **LOW POWER DISSIPATION (440 mW, MAXIMUM, ACTIVE; 55 mW, MAXIMUM, STANDBY)**
- **FULLY TTL-COMPATIBLE**
- **THREE-STATE OUTPUT**
- **MASK-PROGRAMMABLE ENABLE FUNCTION**
- **PIN—COMPATIBLE WITH OTHER STANDARD 24-PIN 16K, 32K, AND 64K ROMs AND EPROMs**

The programmable enable (E) input of the F3564 controls the output and the active-standby modes of operation. The active level of the E input and the memory contents are user-defined.

The F3564 requires only a single +5 V power supply, has TTL-compatible inputs and outputs, and, due to its static operation, requires no clocking or refreshing.

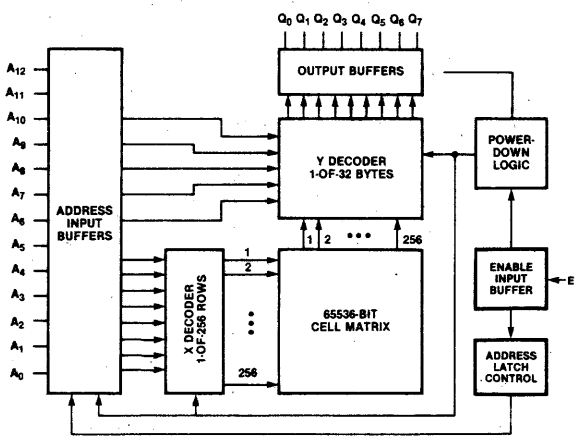

F3564 ROM

F3565 8192 × 8-BIT READ ONLY MEMORY (ROM)

GENERAL DESCRIPTION — The F3565 8192 × 8-bit (64K) mask-programmable read-only memory (ROM) is designed for use in bus-organized systems requiring non-volatile memory storage. Because of its high speed, it readily interfaces with all generations of NMOS microprocessors.

Fabricated with n-channel silicon-gate technology, the F3565 has industry standard pinouts and is compatible with other available 24-pin 16K, 32K, and 64K ROMs and EPROMs.

- **COMPLETELY STATIC OPERATION**
- **SINGLE 5 V POWER SUPPLY**
- **AUTOMATIC POWER-DOWN**
- **ACCESS TIME (t_{AA}) of 250 ns FOR F3565-25 AND 350 ns FOR F3565-35**
- **LOW POWER DISSIPATION (440 mW, MAXIMUM, ACTIVE; 55 mW, MAXIMUM, STANDBY)**
- **FULLY TTL-COMPATIBLE**
- **THREE-STATE OUTPUT**
- **MASK-PROGRAMMABLE ENABLE FUNCTION**
- **PIN-COMPATIBLE WITH OTHER STANDARD 24-PIN 16K, 32K, AND 64K ROMs AND EPROMs**

The programmable enable (E) input of the F3565 controls the output and the active/standby modes of operation. The active level of the E input and the memory contents are user-defined.

The F3565 requires only a single +5 V power supply, has TTL-compatible inputs and outputs, and, due to its static operation, requires no clocking or refreshing.

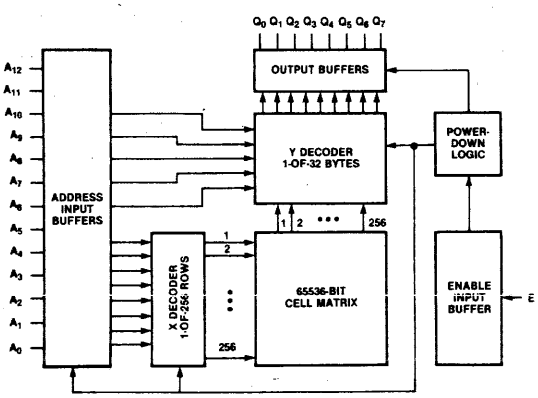

F3565 ROM

F3566 8192 × 8-BIT READ ONLY MEMORY (ROM)

GENERAL DESCRIPTION — The F3566 8192 × 8-bit (64K) read-only memory (ROM) is designed for use in bus-organized systems requiring non-volatile memory storage. Because of its high speed, it readily interfaces with all generations of NMOS microprocessors.

Fabricated with n-channel silicon-gate technology, the F3566 has industry-standard pinouts and is compatible with other available 24-pin 16K, 32K, and 64K ROMs and EPROMs.

- **COMPLETELY STATIC OPERATION**
- **SINGLE 5 V POWER SUPPLY**
- **HIGH-SPEED DATA VALID TIME OF 120 ns**
- **ACCESS TIME (t_{AA}) OF 250 ns for F3566-25 AND 350 ns F3566-35**
- **LOW POWER DISSIPATION (440 mW, MAXIMUM, ACTIVE)**
- **FULLY TTL-COMPATIBLE**
- **THREE-STATE OUTPUT**
- **MASK-PROGRAMMABLE ENABLE FUNCTION**
- **PIN-COMPATIBLE WITH OTHER STANDARD 24-PIN 16K, 32K, and 64K ROMs AND EPROMs**

The output enable (G) input controls the output and provides test data and valid time for high-speed microprocessor applications. The G input and the memory are user-defined.

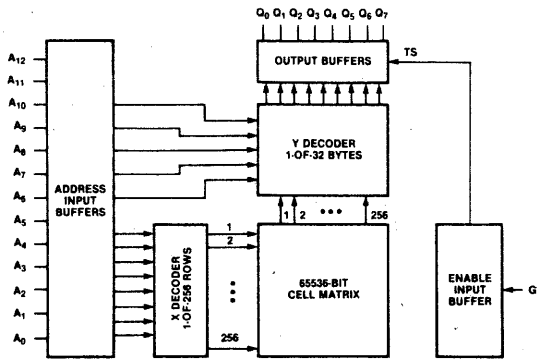

F3566 ROM

F3568 8192 × 8-BIT READ ONLY MEMORY (ROM)

GENERAL DESCRIPTION — The F3568 8192 × 8-bit (64K) mask-programmable, read-only memory (ROM) is designed for use in bus-organized systems requiring non-volatile memory storage. Because of its high speed, it readily interfaces with all generations of NMOS-microprocessors.

Fabricated with n-channel silicon-gate technology, the F3568 has industry-standard pinouts and is compatible with other available 64K ROMs and EPROMs.

- **ADDRESS LATCH FEATURE**
- **AUTOMATIC POWER-DOWN**
- **ACCESS TIME (t_{AA}) OF 250 ns FOR F3568-25 AND 350 ns FOR F3568-35**
- **LOW POWER DISSIPATION (440 mW, MAXIMUM, ACTIVE; 55 mW, MAXIMUM, STANDBY)**
- **FULLY TTL-COMPATIBLE**
- **THREE-STATE OUTPUTS**
- **MASK-PROGRAMMABLE ENABLE FUNCTION**
- **SINGLE 5 V POWER SUPPLY**
- **PIN-COMPATIBLE WITH OTHER STANDARD 28-PIN 64K PROMs AND EPROMs**

The chip enable (CE) input of the F3568 latches the addresses and controls the active and standby modes of operation; the output enable (OE) input controls the chip outputs and provides fast data valid time for high-speed microcomputer applications. Two chip select (CS) inputs are provided for memory expansion. The active levels of the CE and CS inputs, and the memory contents, are user-defined.

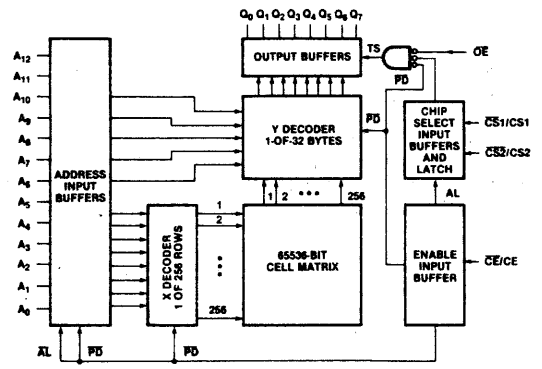

F3568 ROM

F3569 8192 × 8-BIT READ ONLY MEMORY (ROM)

GENERAL DESCRIPTION — The F3569 8192 × 8-bit (64K) mask-programmable read-only memory (ROM) is designed for use in bus-organized systems requiring non-volatile memory storage. Because of its high speed, it readily interfaces with all generations of NMOS microprocessors.

Fabricated with n-channel silicon-gate technology, the F3569 has industry-standard pinouts and is compatible with other available 28-pin 64K ROMs and EPROMs.

- **AUTOMATIC POWER-DOWN**
- **ACCESS TIME (t_{AA}) OF 250 ns FOR F3569-25 AND 350 ns FOR F3569-35**
- **LOW POWER DISSIPATION (440 mW, MAXIMUM, ACTIVE; 55 mW, MAXIMUM, STANDBY)**
- **FULLY TTL-COMPATIBLE**
- **THREE-STATE OUTPUTS**
- **MASK-PROGRAMMABLE ENABLE FUNCTION**
- **SINGLE 5 V POWER SUPPLY**
- **COMPLETELY STATIC OPERATION**
- **PIN-COMPATIBLE WITH OTHER STANDARD 28-PIN 64K ROMs and PROMs**

The chip enable (CE) input of the F3569 controls and active and standby modes of operation; the output enable (OE) input controls the chip output and provides fast data available time for high-speed microcomputer applications. Two chip select (CS) inputs are provided for memory expansion. The active levels of the CE and CS inputs, and the memory contents, are user-defined.

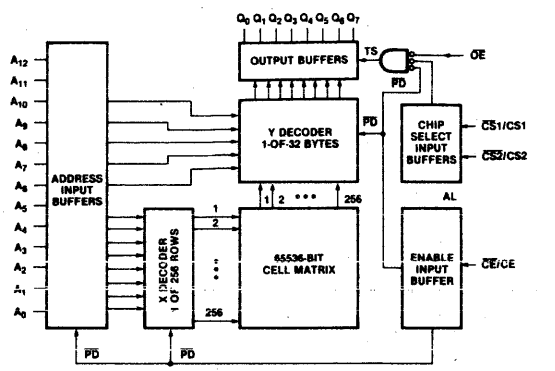

F3569 ROM

© IC MASTER 1984

FAIRCHILD
A Schlumberger Company

F3570
64K ROM

Description

The Fairchild F3570 8192 × 8-bit (64K) mask-programmable, read-only memory (ROM) is designed for use in bus-organized systems requiring non-volatile memory storage. Because of its high speed, it readily interfaces with all generations of NMOS microprocessors.

Fabricated with n-channel silicon-gate technology, the F3570 has industry-standard pinouts and is compatible with other available 28-pin 64K ROMs and EPROMs.

- **Access Time (t_{AA}) of 250 ns for F3570-25 and 350 ns for F3570-35**
- **High-Speed Data Valid Time of 120 ns**
- **Low Power Dissipation (440 mW, Maximum, Active)**
- **Fully TTL-Compatible**
- **Three-State Outputs**
- **Mask-Programmable Chip Select Active Levels**
- **Single 5 V Power Supply**
- **Completely Static Operation**
- **Pin-Compatible with Other Standard 28-Pin 64K ROMs and EPROMs**

The output enable (OE) input controls the chip output and provides fast data valid time for high-speed microprocessor applications. Two chip select (CS) inputs are provided for memory expansion. The active levels of the CS inputs, and the memory contents, are user-defined.

The F3570 requires only a single +5 V power supply, has TTL-compatible inputs and outputs, and, due to its static operation, requires no clocking or refreshing.

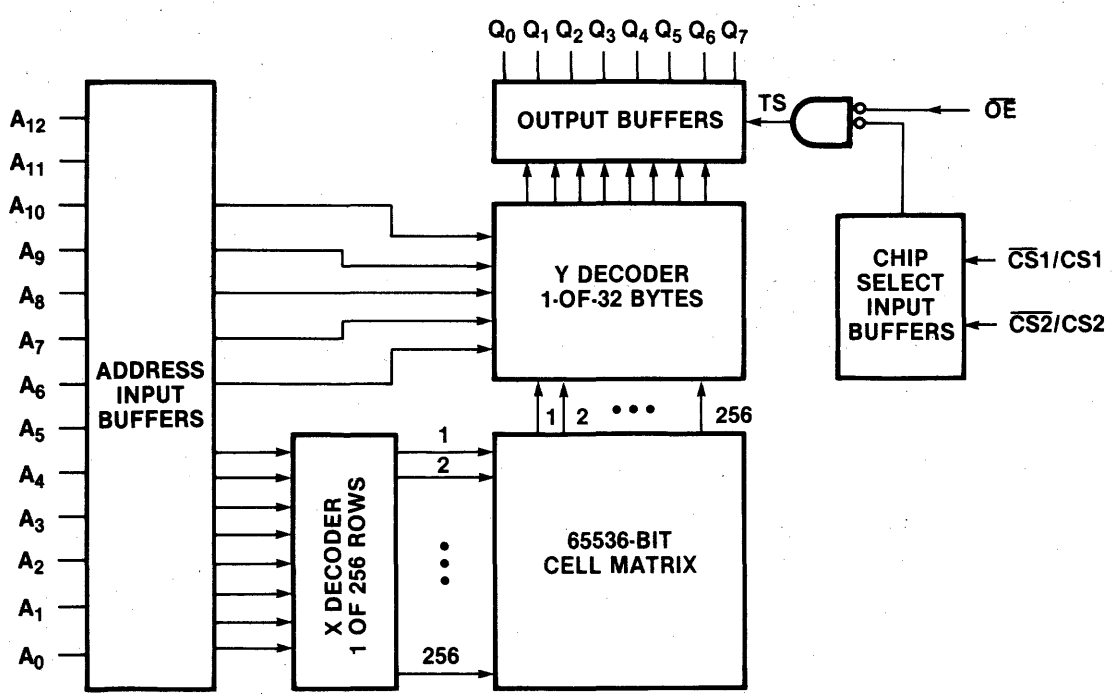

© IC MASTER 1984

F9445 16-Bit Bipolar Microprocessor

Description

The F9445 is a 16-bit microprocessor implemented using Fairchild's Isoplanar Integrated Injection Logic (I^3L®) technology. This bipolar technology and a sophisticated pipeline architecture combine to give the F9445 very fast execution times. The processor has eight program accessible registers and the capability of directly addressing 128K bytes (64K words) of memory. Up to 4M bytes of physical memory may be accessed using the F9444 memory management unit. The F9445 can address 62 I/O devices, handle 16 levels of priority interrupt, and perform fast direct memory access. It has control lines to provide operator-console functions and has an on-chip self-test program. The F9445 CPU is supported with a comprehensive family of LSI support circuits to permit cost and performance effective usage in high-performance microcomputer systems. The support circuits include the F9447 I/O Bus Controller, F9448 Programmable Multiport Interface, F9449 Multiple Data Channel Controller, F9444 Memory Management Unit. and F9470 Console Controller. It is also supported with a library of software packages, including editors, debuggers, macroassembler, relocating loader, real-time executive, interactive multi-user disk operating system and utilities, as well as high-level languages: FORTRAN, BASIC and PASCAL.

- **Advanced Parallel Architecture Leading to Very Fast Execution Times—250 ns Register, 2.9 μs 16 × 16 Bit Multiply**
- **Directly Addresses Up to 128K Bytes of Memory with 11 Addressing Modes**
- **Eight Program-Accessible Registers (AC0, AC1, AC2, AC3, SP, FP, PC, PSW)**
- **Versatile Instruction Set Including Memory Reference, ALU, I/O, Stack, Multiply/Divide, and Floating Point Assist (Scale/Normalize) Instructions with 8-Bit Byte, 16-Bit Word or 32-Bit Double-Word Data**
- **Multi-Processing Capabilities**
- **Flexible Operator-Control Functions and Self-Test**
- **Static Operation with Single Clock Up to 24 MHz**
- **LS TTL Input/Output Structure with I^3L Internal Circuits**
- **40-Pin DIP Needing a Single +5 V Power Supply**
- **Full Military Temperature and Voltage Ranges**
- **Radiation-Tolerant Technology**
- **Comprehensive Family of Support Circuits**

F9445 Functional Diagram

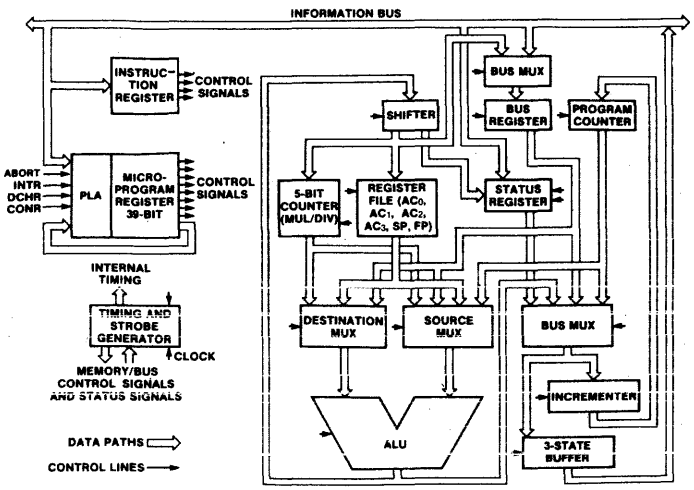

F9447 I/O Bus Controller

Description

The F9447 I/O Bus Controller (IOC) is used with the F9445 16-Bit Bipolar Microprocessor to demultiplex the I/O instructions and data of the information bus (IB). It provides all the timing and the decoded signals required for programmed or data channel (DCH) input/output to peripheral devices. In the NOVA®-compatible mode, the F9447 provides all the timing signals required by that I/O bus. For DCH transfers, address generation and handshake can be handled by the F9449 Multiple Data Channel Controller.

- **Interfaces Directly with the F9445**
- **Controls Standard and High-Speed NOVA-Compatible Data Channel Transfers.**
- **Controls NOVA-Compatible Programmed I/O Operations.**
- **Controls higher speed F9445 I/O and Data Channel timing.**
- **Complete NOVA-Compatible I/O Bus Interface**
- **Auto-Program Load**
- **Power-Up Reset Delay**
- **Console Interface (Global)**
- **Local Busy/Done/Interrupt Logic (Local)**
- **Low-Power TTL Compatible**
- **Packaged in 64-Pin DIP.**

F9447 Block Diagram

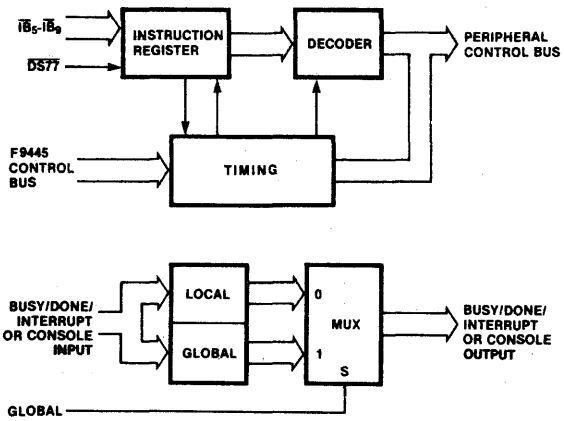

© IC MASTER 1984

FAIRCHILD
A Schlumberger Company

F9449 Multiple Data Channel Controller

Description

The F9449 Multiple Data Channel Controller is a 4-port controller that is used with the Fairchild F9445 16-bit Bipolar Microprocessor to control direct data transfer to and from memory by peripheral devices. It contains four pairs of program-controlled address and word count registers that are multiplexed to control four fully independent data channels (DCHs) through which data transfers can occur. Data transfers are similar to direct memory access (DMA) transfers, except that the F9445 time-shares its information bus (IB) and provides timing and strobe generation.

- **Controls Memory Timing and Strobe Generation**
- **Provides Control of Four Independent Channels**
- **Has Separate Word Count and Memory Address Registers for Each Channel**
- **Supports Byte- or Word-mode Operation on Each Channel**
- **Performs Internal Priority Arbitration**
- **Supports Memory-to-Memory Transfers**
- **Implemented in I^3L Technology, with TTL-compatible Input and Output**
- **Available in a 64-Pin Package**
- **Operating Temperature Range of from −55°C to +125°C**

F9470 Communication and Console Controller

Description

The Fairchild F9470 Communication and Console Controller is an LSI MOS device that provides the Fairchild F9445 16-bit I^3L® microprocessor with virtual console control and programmed serial I/O via a pair of asynchronous communication ports.

The F9470 provides a variety of useful console functions, including examine and deposit to memory and accumulators, jump to a specified location, and trace the F9445 instruction execution.

The F9470 operates in two modes: console control and I/O service. In the console mode, all communication with the F9445 is controlled by the F9470, which interprets user commands, requests the appropriate information from the F9445, and then outputs it to the operator's terminal.

In the I/O service mode, the F9470 acts as a serial I/O controller, interfacing the serial I/O devices to the F9445 through device codes 10-13 and 77. The console commands are not available while in the I/O service mode; all I/O in this mode is programmed through the F9445.

- **Accesses Microprocessor Internal Registers.**
- **Two Asynchronous Serial Ports**
- **Allows CRT Terminal to Operate as a Console for an F9445 System.**
- **40-Pin DIP Requiring Single +5 V Power Supply**
- **NMOS Technology**

F9450 (MIL STD 1750A) 16-Bit Bipolar Microprocessor Family

Description

The F9450 microprocessor, in a single chip, completely implements MIL-STD-1750A (Notice 1) Instruction Set Architecture. This microprocessor is currently being developed as the heart of a high-performance processor family for commercial and military applications requiring high-speed, sophisticated, real-time processing.

Utilizing 16-bit architecture, the F9450 provides 16 user-accessible general purpose registers and performs floating point operations on-chip. The I^3L-II Bipolar VLSI technology affords static operation with 200 ns bus cycle times, LSTTL-compatible input/output, inherent radiation tolerance (1×10^5 rads), and operation at 20 MHz over the full military temperature range.

Real-time processing is achieved through advanced design and architecture, incorporating two programmable timers, a complete 16-level interrupt processor, and a comprehensive fault handler on the chip.

Multiprocessing is supported by a flexible bus arbitration scheme as well as process synchronization (test and set) instructions.

Several support circuits and systems can provide additional capability. These include the F9446 Dynamic Memory Controller; the F9451 Memory Management Unit, providing memory-mapped expansion to 1M words; and the F9452 Block Protect Unit. A multi-user development system (FS-1) has been developed, as well as EMUTRAC™, which offers real-time system emulation and debugging. Information on these products is available in the Microprocessor Products Data Book.

Comprehensive software support for the F9450 (MIL-STD-1750A), including assemblers, loaders, simulators and compilers, is available from various sources. An ADA compiler for MIL-STD-1750A is also under development. For a list of available software contact Fairchild - see last page of data sheet.

- **Single-chip microprocessor fully implements MIL-STD-1750A (Notice 1) ISA**
- **High performance over military temperature range - 700 KIPS DAIS mix with floating point - 0.2 μs ADD, 1.85 μs MULTIPLY**
- **Real-time processing - two programmable timers - 16 levels of vectored interrupt**
- **32 and 48-bit floating point arithmetic on chip**
- **Bipolar VLSI I^3L® -II - 1×10^5 radiation**
- **Multiprocessor capabilities**
- **Single and double precision arithmetic**
- **Direct address to 64K words, expandable to 1M words**
- **16 General-purpose registers**
- **Static operation with single clock - 0-20 MHz**
- **TTL inputs and outputs with 8 mA drive capability**
- **Single 5 V supply - injector current source required**
- **64-pin DIPs with 50-mil pin centers**

© IC MASTER 1984

F16000 Family

Features

- True 32-Bit Internal Architecture
- 16M Bytes of Uniform, Unsegmented Address Space
- Eleven Addressing Modes
- Demand-Paged Virtual Memory Management
- Totally Symmetric Architecture in Terms of Instructions, Addressing, Registers, and Data-Type Handling
- Efficient Use of High-Level Language Processing and Compilation
- Provides for Absolute Software Modularity
- Open-Ended Architecture Provides for Future Expansion

Device	Description
F16008	8-Bit Processor Unit
F16016	16-Bit Bilingual Processor Unit
F16032	32-Bit Processor Unit
F16081	Floating-Point Processor Unit
F16082	Memory Management Unit
F16105	Very Intelligent Programmable Controller
F16201	Clock Generator

Device	Description
F16202	Interrupt Control Unit
F16203	Direct Memory Access Unit
F16204	Bus Arbiter
F16413	CRT Controller
F16425	Packet Switching Frame Level Controller
F16456	Multiple Protocol Controller
F16488	General-Purpose Interface Bus Controller

F16000 MICROPROCESSOR FAMILY ORGANIZATION

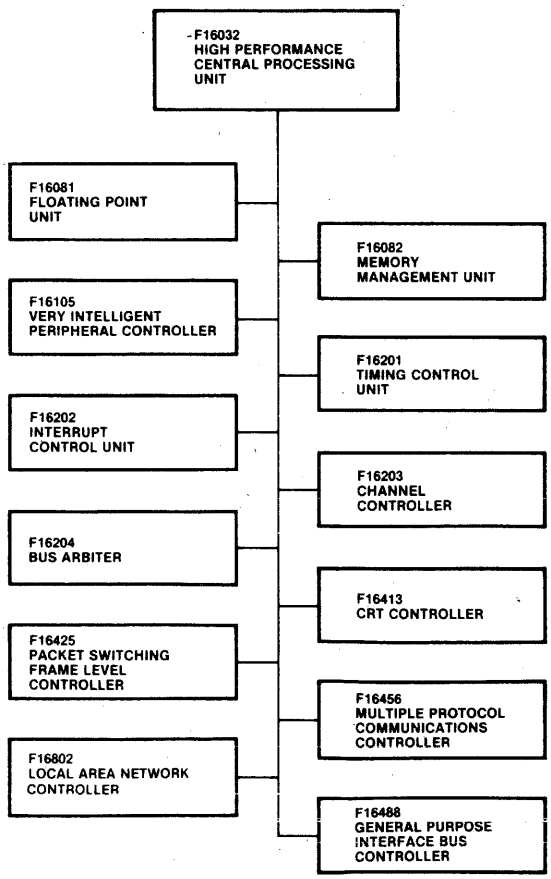

© IC MASTER 1984

FAIRCHILD
A Schlumberger Company

F16032 High-Performance CPU

Description

The F16032 central processing unit (CPU) acts as the highest performance CPU for the F16000 microprocessor family. It is designed to provide optimal support to microprocessor users who need a large addressing space for large programs or data structures. The F16000 architecture allows very efficient compilation for large programs generated and maintained in high-level languages, while remaining easy to program at the assembler level for optimizations. Figure 1 is a block diagram of the F16032 CPU.

- **32-Bit Architecture and Implementation**
- **16-Mb Uniform Addressing Space**
- **Two-Address Architecture**
- **High Degree of Symmetry in Instruction Set**
- **Addressing Modes Designed to Support High-Level Language Accesses to Variables**
- **High-Speed N-Channel MOS Technology**
- **Single +5 V Power Supply**
- **48-Pin Dual In-Line Package (DIP)**

F16032 Block Diagram

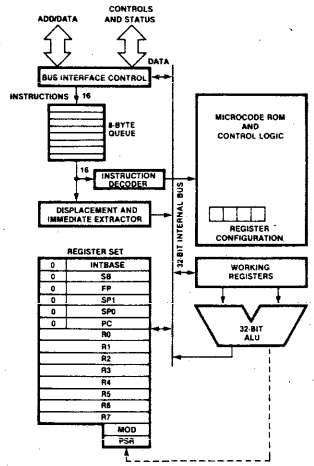

F16456 Multiple Protocol Communications Controller

Description

The Fairchild F16456 Multiple Protocol Communications Controller (MPCC) is a programmable microprocessor peripheral device that interfaces a computer system to a serial data communication channel with minimum system overhead. It can be used in computer-to-computer or computer-to-terminal communications, or in control of network trunk lines with the F16000 family and other microprocessors.

- **F16000 Family, 8080, 8086 Bus Compatible**
- **Satisfies Interface Requirements for Asynchronous Mode and for Synchronous Bit-Oriented Protocol (BOP) or Synchronous Byte-Control Protocol (BCP)**
- **Generates and Tests Error Detection Codes; Generates and Detects Special Characters**
- **Bidirectional Three-State Data Bus Interface (Selectable as 8-Bit or 16-Bit Bus)**
- **Full- or Half-Duplex Operation**
- **Modem Handshake Signals**
- **5- to 8-Bit Character Lengths**
- **Primary or Secondary Station Operation**
- **Normal and Transparent Text Modes**
- **Directly Addressable Registers**
- **Serial Data from dc to 2.0M bps**
- **NRZ or NRZI (Complemented on Zero) Serial Data**
- **Self-Tested Loop-Back Mode**
- **Maintains Data Transparency Through Automatic Manipulation of the Data Stream**
- **TTL-Compatible**
- **Single +5 V Power Supply**
- **40-Pin Plastic or Ceramic Dual-in-Line Package**

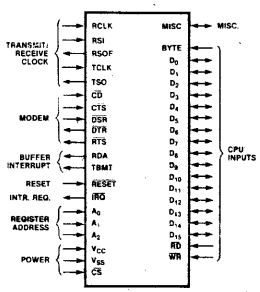

F16488 GPIB Controller

Description

The Fairchild F16488 General-Purpose Interface Bus (GPIB) controller serves as a general IEEE-488 compatible listener/talker and controller within the 16000 microprocessor family for applications in the interconnection of intelligent programmable instruments on the general-purpose interface bus. It is compatible with most MOS microprocessor families.

- **Handles All IEEE 488-1975/78 as Well as 1980 Supplement Functions**
- **Talker, Listener, and Controller Functions**
- **Compliance of All Bus Signals with IEEE 488 and IEC 625 Inputs, Threshold, Termination, and Output Specifications**
- **DMA Access Facilities (Compatible with F16203 and Most Other DMA Controllers)**
- **Single-Phase 10-MHz Maximum TTL Clock**
- **Pass Control Capabilities**
- **Stoppage of Transmission of Unwanted Data Possible Through NBAF Auxiliary Command**

F16488 Block Diagram

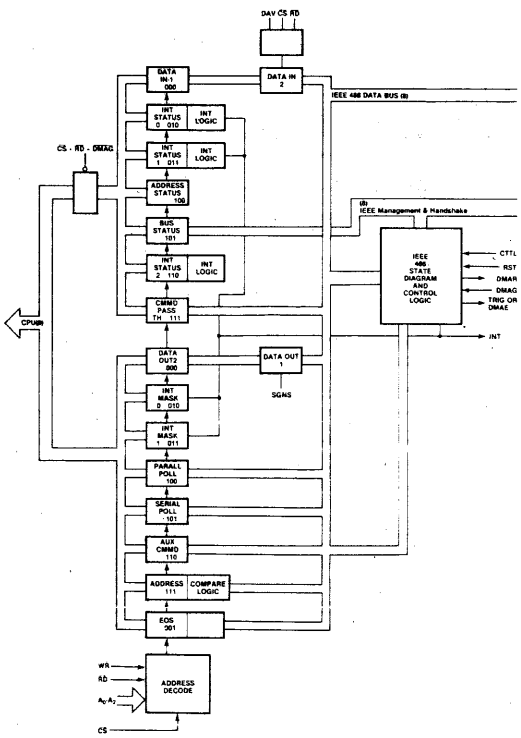

© IC MASTER 1984

80C86

HARRIS CMOS 80C86 16-BIT CPU AND PERIPHERALS

THE WAIT IS OVER

HARRIS

© IC MASTER 1984

HARRIS

80C86

CMOS 16 BIT MICROPROCESSOR

Advance Information

Features

- COMPATIBLE WITH NMOS 8086
- COMPLETELY STATIC DESIGN
  - ▶ OPERATION FROM DC TO 5MHz
- LOW POWER OPERATION
  - ▶ ICCSB = 500μA MAXIMUM
  - ▶ ICCOP = 10mA/MHz TYPICAL
- 1 MBYTE OF DIRECT MEMORY ADDRESSING CAPABILITY
- 24 OPERAND ADDRESSING MODES
- BIT, BYTE, WORD, AND BLOCK MOVE OPERATIONS
- 8 and 16 BIT SIGNED/UNSIGNED ARITHMETIC
  - ▶ BINARY or DECIMAL
  - ▶ MULTIPLY and DIVIDE
- BUS-HOLD CIRCUITRY ELIMINATES PULL-UP RESISTORS
- SCALED SAJI IV CMOS PROCESS
- SINGLE 5V POWER SUPPLY
- COMMERCIAL, INDUSTRIAL and MILITARY TEMPERATURE RANGES

Description

The Harris 80C86 high performance 16 bit CMOS CPU is manufactured using a self-aligned silicon gate CMOS process (Scaled SAJI IV).Two modes of operation, MINimum for small systems and MAXimum for larger applications such as multi-processing, allow user configuration to achieve the highest performance level. Full TTL compatibility and industry standard operation allow use of existing NMOS 8086 hardware and software designs.

Pinout

MAX (MIN)

GND	1		40	V_{CC}
AD14	2		39	AD15
AD13	3		38	A16/S3
AD12	4		37	A17/S4
AD11	5		36	A18/S5
AD10	6		35	A19/S6
AD9	7		34	$\overline{BHE}$/S7
AD8	8		33	MN/$\overline{MX}$
AD7	9		32	$\overline{RD}$
AD6	10	80C86	31	$\overline{RQ}/\overline{GT0}$ (HOLD)
AD5	11		30	$\overline{RQ}/\overline{GT1}$ (HLDA)
AD4	12		29	$\overline{LOCK}$ ($\overline{WR}$)
AD3	13		28	$\overline{S2}$ (M/$\overline{IO}$)
AD2	14		27	$\overline{S1}$ (DT/$\overline{R}$)
AD1	15		26	$\overline{S0}$ ($\overline{DEN}$)
AD0	16		25	QS0 (ALE)
NMI	17		24	QS1 ($\overline{INTA}$)
INTR	18		23	$\overline{TEST}$
CLK	19		22	READY
GND	20		21	RESET

Functional Diagram

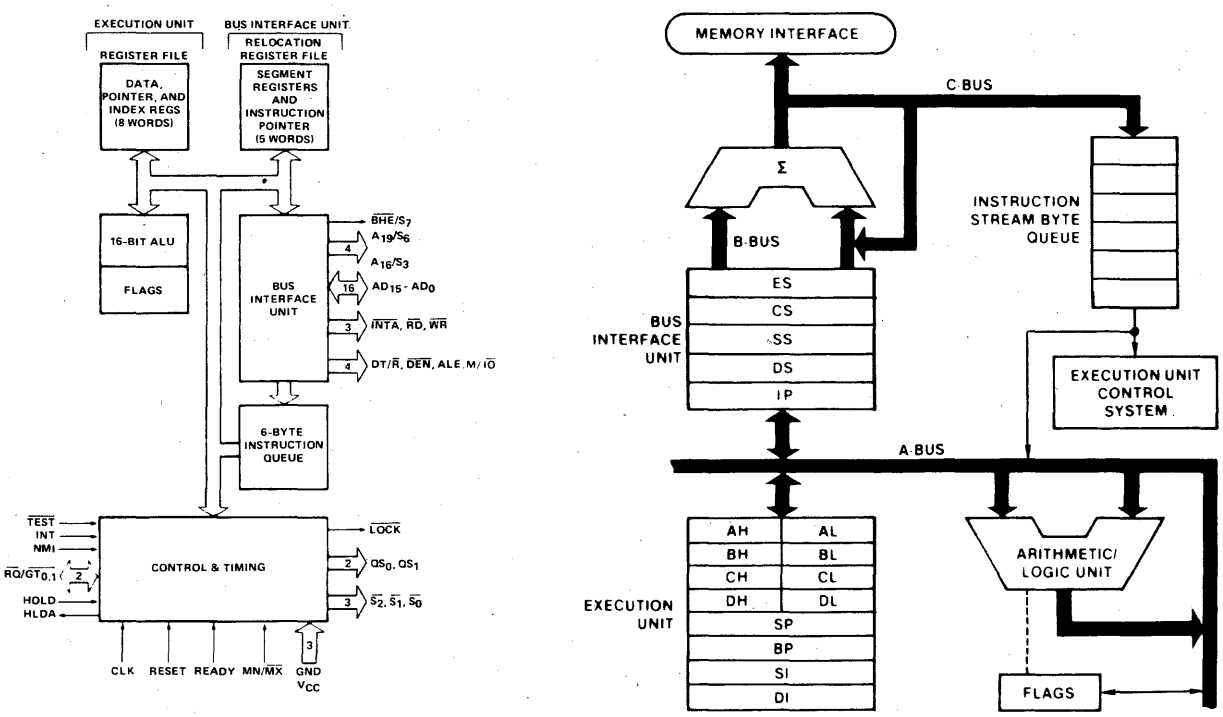

CAUTION: Electronic devices are sensitive to electrostatic discharge. Proper I.C. handling procedures should be followed.

Copyright © Harris Corporation 1983

16-Bit Breakthrough in CMOS Available Now

80C86

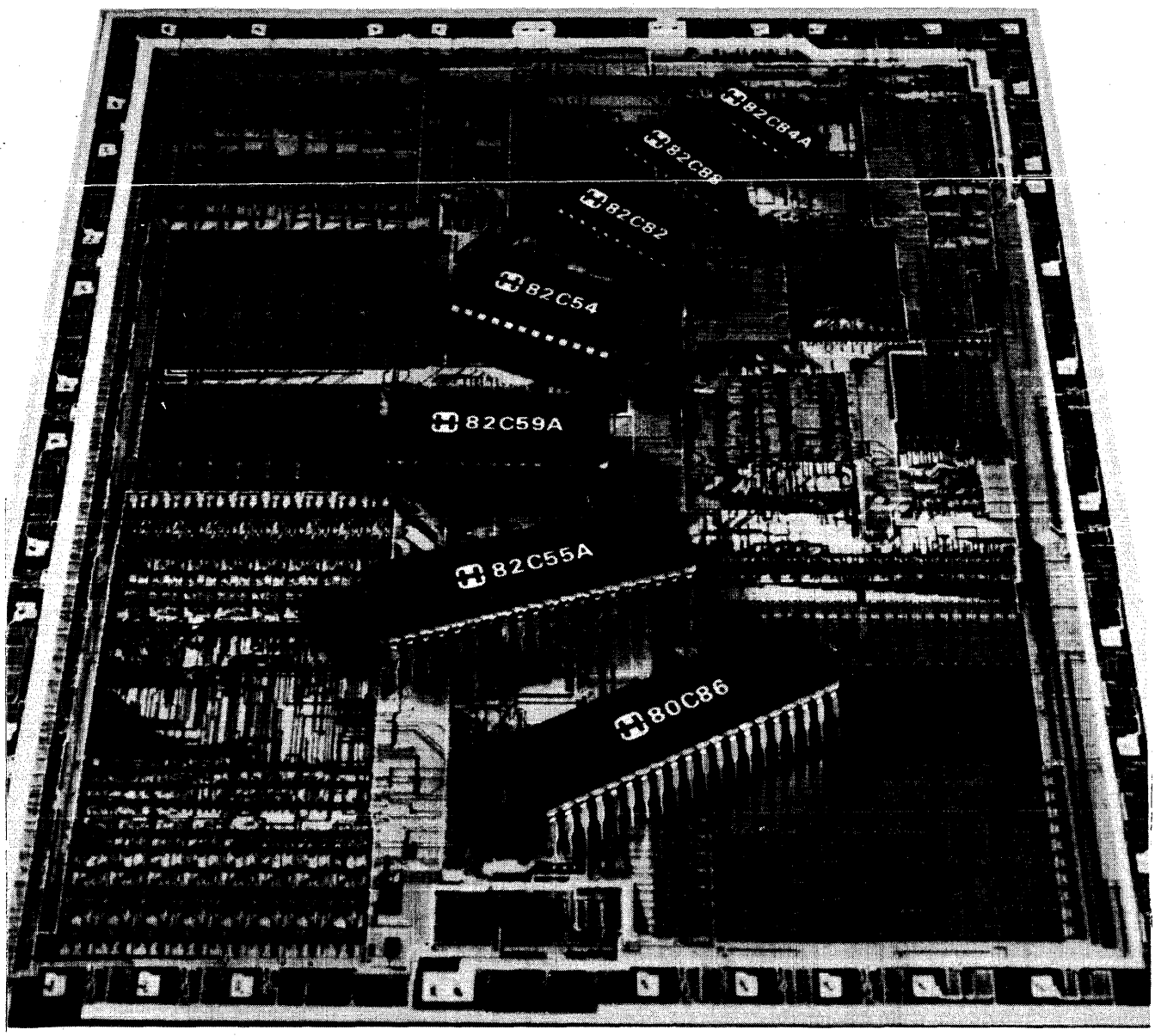

16-Bit CMOS Microprocessor Family

HARRIS

MICROPROCESSOR Harris Semiconductor

© IC MASTER 1984

HARRIS 80C86 FAMILY Blazes New Frontiers In CMOS

INTRODUCTION

The Harris 80C86 CMOS microprocessor family now brings a new dimension to CMOS system design. The CMOS 80C86, with the most widely used 16-bit architecture, is available now — along with industry-standard peripherals to provide the tools necessary for low-power system design.

All at performance levels never before available in CMOS.

Full functional and performance compatibility with NMOS/bipolar 8086 family products eases the transition to low-power operation. Whether your application is full CMOS system design or existing system upgrade, unparalleled low-power and high-performance operation is now available with the Harris 80C86 family.

LOW POWER

Low power is a tradition with CMOS. The low-power operation of CMOS in 80C86 circuits assures extremely low standby current along with typical operating power of less than 10% of the equivalent NMOS/bipolar system.

Low CMOS operating power lowers system temperatures and allows the use of sealed enclosures without thermal build-up problems. Eliminating the effects of the outside environment, by using sealed enclosures and removing fans, increases overall system reliability.

PERFORMANCE

Low-power operation becomes even more attractive when there is no performance penalty.

The 80C86 family offers equivalent or better operation in all aspects of performance. System frequencies up to 5 and 8 MHz provide the highest speed CMOS system available.

High speed is great. But in some cases, low speed is better. Static circuitry used throughout the product line, including the 80C86 CPU, means that extremely low-frequency operation at equally low-power dissipation is possible.

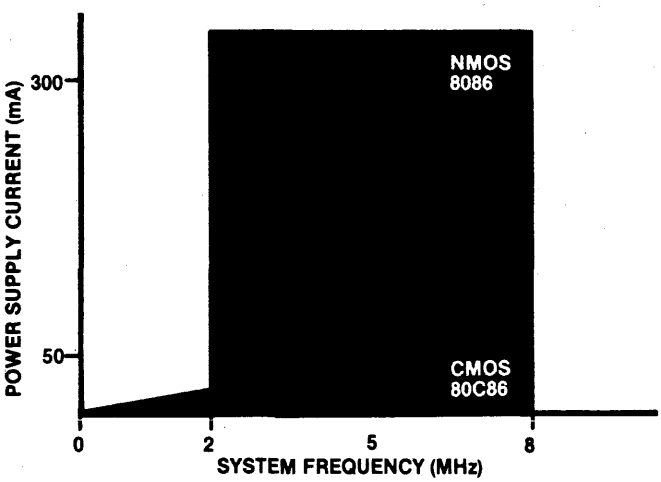

There is no minimum clock frequency requirement on the 80C86 family processors or peripheral circuits. System clocks can be stopped, putting the entire system into a standby mode where typical device power needs are in the microwatt range.

System debug also becomes a simpler task. By stopping the clock and single-stepping, you have time to set-up and analyze specific situations without high speed problems.

System design time is reduced, resulting in decreased development costs.

WIDE TEMPERATURE RANGES

80C86 products are designed for guaranteed operation over extended temperature ranges. Designing these circuits for harsh environments assures greater reliability of system performance over all temperature ranges. All AC and DC parameters for the 80C86 circuits are guaranteed for the following temperatures:

Commercial	(0 °C to +70 °C)
Industrial	(−40 °C to +85 °C)
Military	(−55 °C to +125 °C)

Guaranteed operation in commercial, industrial, and military environments means consistent performance for any application. Add CMOS low-power dissipation and you get this performance without the thermal problems associated with higher power technologies.

COMPATIBILITY

Compatibility with industry-standard operation and support has been stressed at every point of the 80C86 family development cycle.

A technology exchange agreement between Harris and Intel provided design and test information for continued confidence in CMOS circuit design compatibility. In addition, it will provide two compatible sources for the CMOS 80C86 CPU and peripherals to assure longevity and consistent operation.

The compatibility means that the Harris 80C86 can execute existing software in existing systems. There is no need to rework hardware and software developed for NMOS 8086 designs in order to move up to CMOS. By using designs and programs already in place, costs of developing high-performance, low-power systems are kept to a minimum.

Extensive in-system testing of the 80C86 family prior to introduction assures reliable operation with existing hardware and software designs.

Full CMOS system design giving both high performance and low operating power has become a reality with the Harris 80C86 microprocessor family.

© IC MASTER 1984

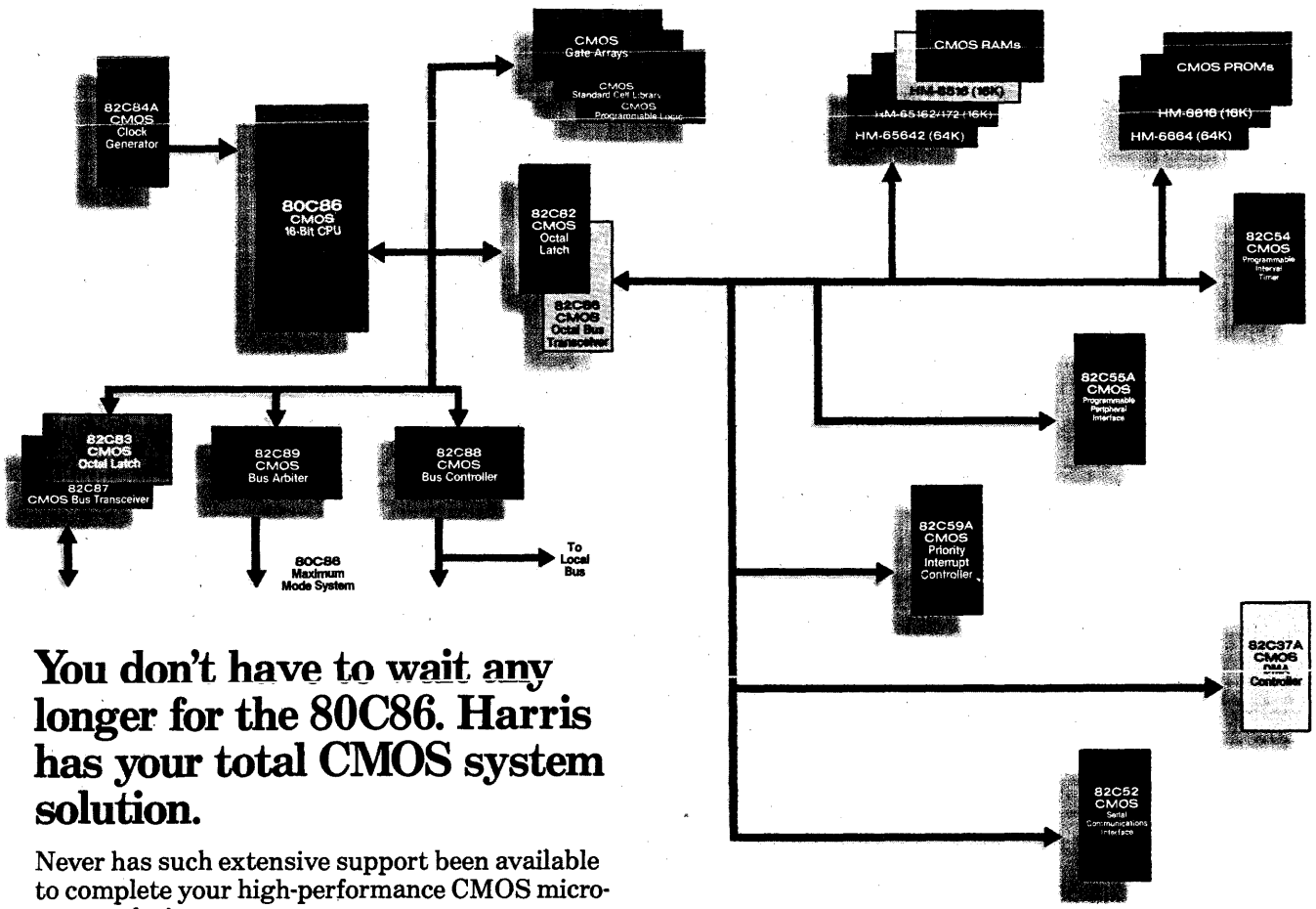

You don't have to wait any longer for the 80C86. Harris has your total CMOS system solution.

Never has such extensive support been available to complete your high-performance CMOS microsystem design.

The full complement of CMOS processors, peripherals and memory circuits in the 80C86 family provides the critical elements needed for complex, low-power applications. Also available are VLSI, gate array and standard cell library products to provide maximum support in high-performance, low-power system design. Add to this, the largest software and development support base in the industry.

Now, industry-standard compatibility teams with superior performance to make low-power CMOS system design simple.

Harris 80C86-Compatible CMOS RAMs

Part Number	Density	Description	Access Time	Operating Current
HM-6516	16K	2K x 8 Synchronous	120 ns	10 mA/MHz
HM-65162	16K	2K x 8 Asynchronous	90/70/55 ns	70 mA
HM-65172†	16K	2K x 8 Asynchronous	90/70/55 ns	70 mA

† Available Q1, 1984

Harris 80C86-Compatible CMOS PROMs

Part Number	Density	Description	Access Time
HM-6616	16K	2K x 8 Synchronous	120 ns
HM-6616B	16K	2K x 8 Synchronous	90 ns
HM-6664*	64K	8K x 8 Asynchronous	175 ns

* Available Q2, 1984

For a complete Harris 80C86 and peripherals design package, write:
Harris Semiconductor CMOS Digital Products Division, P.O. Box 883, MS 53-035, Melbourne, Florida 32901.

HARRIS

© IC MASTER 1984

HARRIS

80C86

PRODUCT BRIEF

FEATURES

- HARDWARE AND SOFTWARE COMPATIBLE WITH NMOS 8086
- FULLY TTL COMPATIBLE
- 1 MBYTE OF DIRECT MEMORY ADDRESSING CAPABILITY
- 24 OPERAND ADDRESSING MODES
- BIT, BYTE, WORD, AND BLOCK OPERATIONS
- 8 and 16 BIT SIGNED/UNSIGNED ARITHMETIC
  - BINARY or DECIMAL
  - MULTIPLY and DIVIDE
- BUS-HOLD CIRCUITRY ELIMINATES PULL-UP RESISTORS
- ARCHITECTURE DESIGNED FOR EFFICIENT HIGH LEVEL LANGUAGE OPERATION
- MULTIBUS™ SYSTEM COMPATIBLE INTERFACE
- 5 AND 8 MHz OPERATING FREQUENCIES
- SCALED SAJI IV CMOS PROCESS
- LOW OPERATING POWER
- SINGLE 5V POWER SUPPLY
- INDUSTRIAL and MILITARY TEMPERATURE RANGES

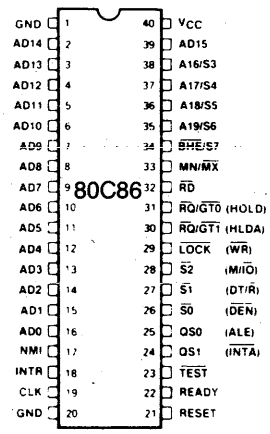

DESCRIPTION

The Harris 80C86 high performance 16 bit CMOS CPU is manufactured using a self-aligned silicon gate CMOS process (Scaled SAJI IV). Two modes of operation, minimum for small systems and maximum for larger applications such as multiprocessing, allow user configuration to achieve the highest performance level. The Harris 80C86 is available in a 40 pin industry standard ceramic DIP package and 5 and 8 MHz operating frequencies.

The low power characteristics of the Harris SAJI CMOS process, along with completely static 80C86 design, allows tailoring of your system power requirements. Reducing the system operating frequency to the DC level can bring 80C86 power dissipation down to standby current levels, with proportional reductions at intermediate frequencies.

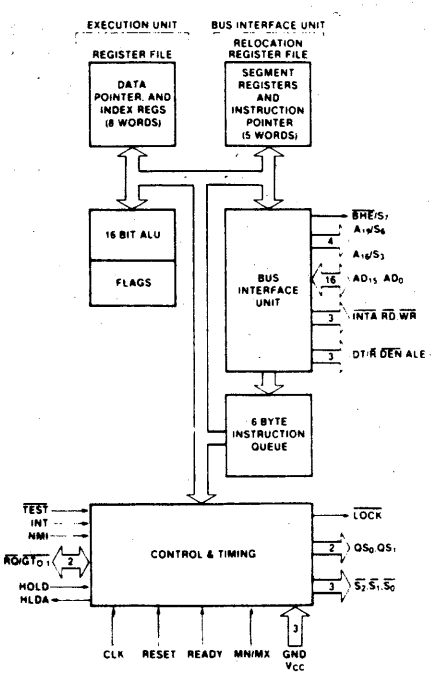

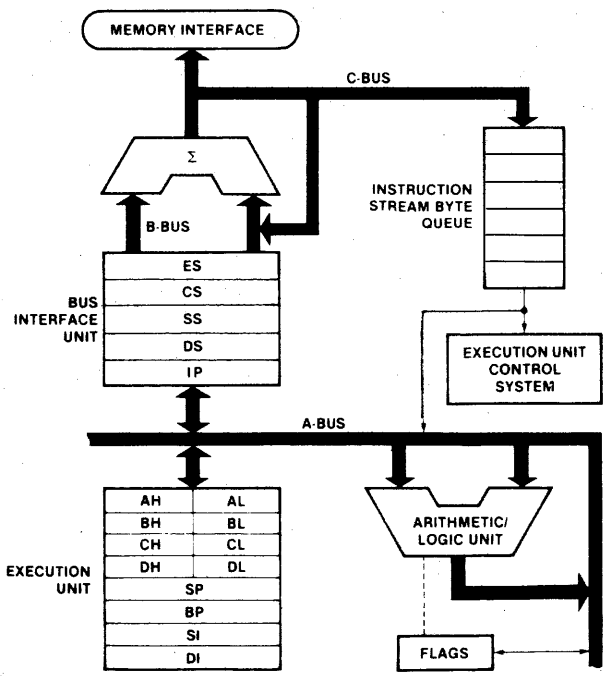

© IC MASTER 1984

FUNCTIONAL DESCRIPTION
STATIC OPERATION

All 80C86 circuitry is of static design. Internal registers, counters and latches are static and require no refresh as with dynamic circuit design. This eliminates the minimum operating frequency restriction placed on other microprocessors. The CMOS 80C86 can operate from DC to the appropriate upper frequency limit of 5 or 8 MHz. The processor clock may be stopped in either state (high or low) and held there indefinitely. This type of operation is especially useful for system debug or power critical applications.

The 80C86 can be single stepped using only the CPU clock. This state can be maintained as long as is necessary during debug. Single step clock operation allows simple interface circuitry to provide critical information for bringing up your system.

Static design also allows very low frequency operation (less than two megahertz). In a power critical situation, this can provide extremely low power operation since 80C86 power dissipation is directly related to operating frequency. As the system frequency is reduced, so is the operating power until, ultimately, at a DC input frequency, the 80C86 power requirement is the standby current.

INTERNAL ARCHITECTURE

The internal functions of the 80C86 processor are partitioned logically into two processing units. The first is the Bus Interface Unit (BIU) and the second is the Execution Unit (EU) as shown in the CPU block diagram.

These units can interact directly but for the most part perform as separate asynchronous operational processors. The bus interface unit provides the functions related to instruction fetching and queuing, operand fetch and store, and address relocation. This unit also provides the basic bus control. The overlap of instruction pre-fetching provided by this unit serves to increase processor performance through improved bus bandwidth utilization. Up to 6 bytes of the instruction stream can be queued while waiting for decoding and execution.

The instruction stream queuing mechanism allows the BIU to keep the memory utilized very efficiently. Whenever there is space for at least 2 bytes in the queue, the BIU will attempt a word fetch memory cycle. This greatly reduces "dead time" on the memory bus. The queue acts as a First-In-First-Out (FIFO) buffer, from which the EU extracts instruction bytes as required. If the queue is empty (following a branch instruction, for example), the first byte into the queue immediately becomes available to the EU.

The execution unit receives pre-fetched instructions from the BIU queue and provides un-relocated operand addresses to the BIU. Memory operands are passed through the BIU for processing by the EU, which passes results to the BIU for storage.

MEMORY ORGANIZATION

The processor provides a 20-bit address to memory, then locates the byte being referenced. The memory is organized as a linear array of up to 1 million bytes, addressed as OOOOO(H) to FFFFF(H). The memory is logically divided into code, data, extra data, and stack segments of up to 64K bytes each, with each segment falling on 16-byte boundaries.

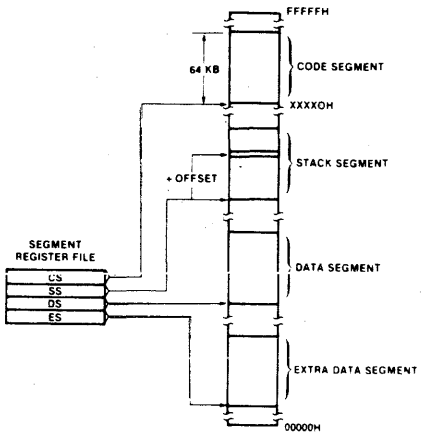

All memory references are made relative to base addresses contained in high speed segment registers. The segment types were chosen based on the addressing needs of programs. The segment register to be selected is automatically chosen according to specific rules of operation. All information in one segment type share the same logical attributes (e.g.,code or data). By structuring memory into relocatable areas of similar characteristics and by automatically selecting segment registers, programs are shorter, faster, and more structured.

Word (16-bit) operands can be located on even or odd address boundaries and are thus not constrained to even boundaries as is the case in many 16-bit computers. For address and data operands, the least significant byte of the word is stored in the lower valued address location and the most significant byte in the next higher address location. The BIU automatically performs the proper number of memory accesses, one if the word operand is on an even byte boundary and two if it is on an odd byte boundary. Except for the performance penalty, this double access is transparent to the software. This performance penalty does not occur for instruction fetches, only word operands.

MINIMUM AND MAXIMUM OPERATION MODES

The requirements for supporting minimum and maximum 80C86 systems are sufficiently different that they cannot be done efficiently with 40 uniquely defined pins. Consequently, the 80C86 is equipped with a strap pin (MN/MX) which defines the system configuration. The definition of a certain subset of the pins changes dependent on the condition of the strap pin. When the MN/MX pin is strapped to GND, the 80C86 treats pins 24 through 31 in maximum mode. An 82C88 bus controller interprets status information coded into S_0, S_1, S_2 to generate bus timing and control signals compatible with the MULTIBUS™ architecture. When the MN/MX pin is strapped to V_{CC}, the 80C86 generates bus control signals itself on pins 24 through 31.

© IC MASTER 1984

BUS OPERATION

The 80C86 has a combined address and data bus commonly referred to as a time multiplexed bus. This technique provides the most efficient use of pins on the processor while permitting the use of a standard 40-lead package. This "local bus" can be buffered directly and used throughout the system with address latching provided on memory and I/O modules. In addition, the bus can also be demultiplexed at the processor with a single set of 82C82 address latches if a standard non-multiplexed bus is desired for the system.

I/O ADDRESSING

In the 80C86, I/O operations can address up to a maximum of 64K I/O byte registers or 32K I/O word registers. The I/O address appears in the same format as the memory address on bus lines A_{15}-A_0. The address lines A_{19}-A_{16} are zero in I/O operations. The variable I/O instructions which use register DX as a pointer have full address capability while the direct I/O instructions directly address one or two of the 256 I/O byte locations in page 0 of the I/O address space.

EXTERNAL INTERFACE

PROCESSOR RESET AND INITIALIZATION

Processor initialization or start up is accomplished with activation (HIGH) of the RESET pin. The 80C86 will terminate operations on the high-going edge of RESET and will remain dormant as long as RESET is HIGH. The low-going transition of RESET triggers an internal reset sequence. After this interval, the 80C86 operates normally beginning with the instruction in absolute location FFFFOH. The RESET input is internally synchronized to the processor clock.

BUS HOLD CIRCUITRY

To avoid high current conditions caused by floating inputs to CMOS devices, "bus-hold" circuitry has been used on specific 80C86 pins, such as $\overline{RD}$, $\overline{WR}$, M/$\overline{IO}$, AD0-AD15 and others. These circuits can maintain a valid logic state if no driving source is present (i.e. an unconnected pin or a driving source which goes to a high impedance state). To overdrive the "bus hold" circuits, an external driver must be capable of supplying approximately 300μA minimum sink or source current at valid input voltage levels. Since this "bus hold" circuitry is active and not a "resistive" type element, the associated power supply current is negligible and power dissipation is significantly reduced when compared to the use of passive pull-up resistors.

INTERRUPT OPERATIONS

Interrupt operations fall into two classes; software or hardware initiated. The software initiated interrupts and software aspects of hardware interrupts are specified in the Instruction Set description in the 80C86 data sheet. Hardware interrupts can be classified as non-maskable or maskable.

Interrupts result in a transfer of control to a new program location. A 256-element table containing address pointers to the interrupt service program locations resides in absolute locations 0 through 3FFH, which are reserved for this purpose. Each element in the table is 4 bytes in size and corresponds to an interrupt "type". An interrupting device supplies an 8-bit type number during the interrupt acknowledge sequence, which is used to "vector" through the appropriate element to the new interrupt service program location.

NON-MASKABLE INTERRUPT (NMI)

The processor provides a single non-maskable interrupt pin (NMI) which has higher priority than the maskable interrupt request pin (INTR). A typical use would be to activate a power failure routine. The NMI is edge-triggered on a LOW-to-HIGH transition.

NMI is required to have a duration in the HIGH state of greater than two CLK cycles, but is not required to be synchronized to the clock. Any high-going transition of NMI is latched on-chip and will be serviced at the end of the current instruction or between whole moves of a block-type instruction.

MASKABLE INTERRUPT (INTR)

The 80C86 provides a single interrupt request input (INTR) which can be masked internally by software with the resetting of the interrupt enable FLAG status bit. The interrupt request signal is level triggered. It is internally synchronized during each clock cycle on the high-going edge of CLK. During the interrupt response sequence, further interrupts are disabled.

HALT

When a software "HALT" instruction is executed, the processor indicates that it is entering the "HALT" state in one of two ways depending upon which mode is strapped. In minimum mode, the processor issues one ALE with no qualifying bus control signals. In maximum mode, the processor issues appropriate HALT status on S_2, S_1, S_0 and the 82C88 bus controller issues one ALE. The 80C86 will not leave the "HALT" state when a local bus "hold" is entered while in "HALT". In this case, the processor reissues the HALT indicator. An interrupt request or RESET will force the 80C86 out of the "HALT" state.

© IC MASTER 1984

HARRIS

80C88
CMOS
8 BIT MICROPROCESSOR

Preview

Features

- COMPATIBLE WITH NMOS 8088
- DIRECT SOFTWARE COMPATIBLITY WITH 80C86, 8086, 8088
- 8 BIT DATA BUS INTERFACE
- 16 BIT INTERNAL ARCHITECTURE
- COMPLETELY STATIC DESIGN
  - ▶ OPERATION FROM DC TO 5MHz
- LOW POWER OPERATION
  - ▶ ICCSB = 500μA MAXIMUM
  - ▶ ICCOP = 10mA/MHz TYPICAL
- 1 MBYTE OF DIRECT MEMORY ADDRESSING CAPABILITY
- 24 OPERAND ADDRESSING MODES
- BIT, BYTE, WORD, AND BLOCK MOVE OPERATIONS
- 8 and 16 BIT SIGNED/UNSIGNED ARITHMETIC
- BUS-HOLD CIRCUITRY ELIMINATES PULL-UP RESISTORS
- SCALED SAJI IV CMOS PROCESS
- SINGLE 5V POWER SUPPLY
- COMMERCIAL, INDUSTRIAL and MILITARY TEMPERATURE RANGES

Description

The Harris 80C88 high performance 16 bit CMOS CPU is manufactured using a self-aligned silicon gate CMOS process (Scaled SAJI IV). Two modes of operation, MINimum for small systems and MAXimum for larger applications such as multi-processing, allow user configuration to achieve the highest performance level. Full TTL compatibility and industry standard operation allow use of existing NMOS 8088 hardware and Harris CMOS 80C86 peripherals. Complete software compatibility with the 80C86, 8086 and 8088 microprocessors allows use of existing software in new designs.

Pinout

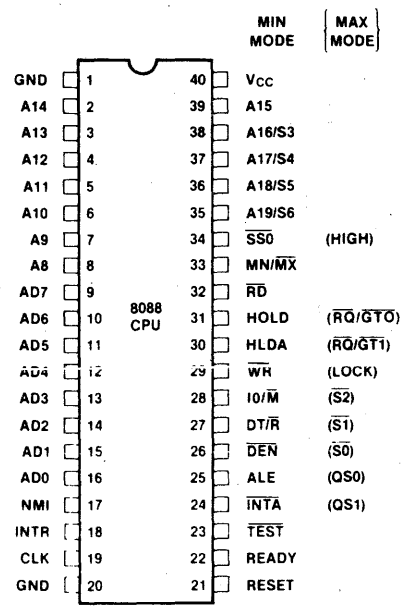

Functional Diagram

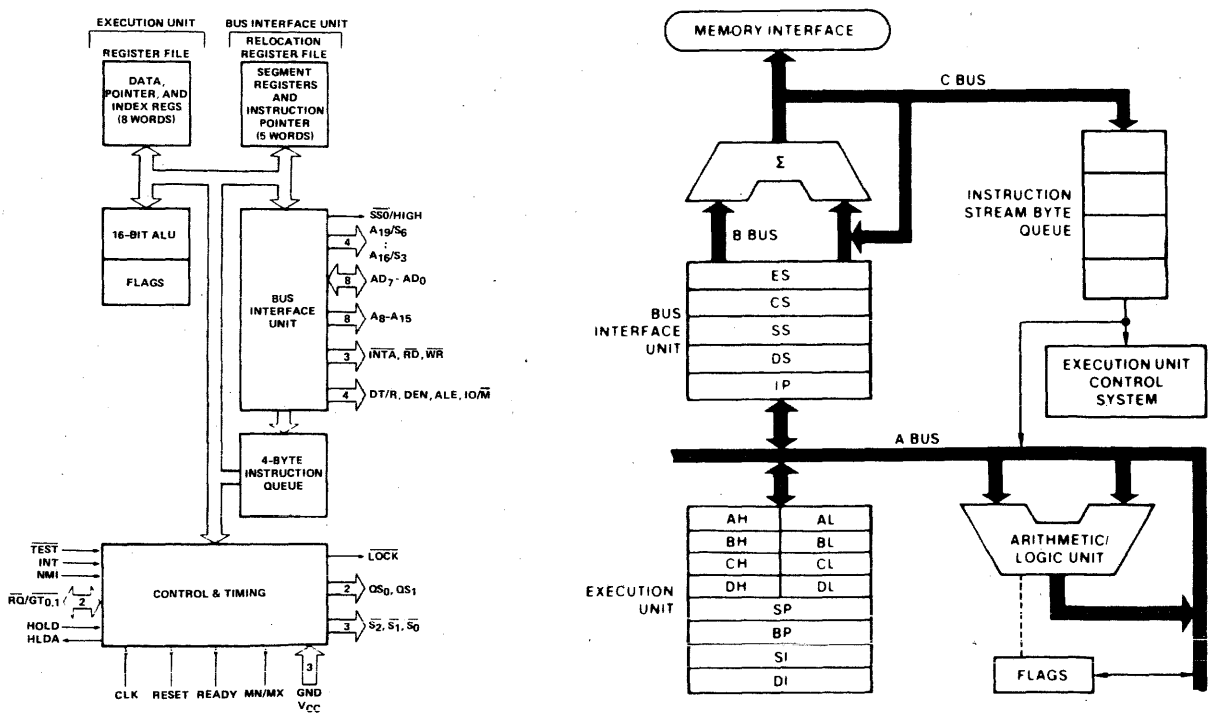

CAUTION: Electronic devices are sensitive to electrostatic discharge. Proper I.C. handling procedures should be followed.

Copyright © Harris Corporation 1983

© IC MASTER 1984

16-Bit Microprocessor

Part Number	Features
80C86	• Compatible with NMOS 8086 • Low power operation: — 10 mA/MHz operating current — 500 μA standby current • Static DC to 5 MHz operation • Hardware/software compatible with NMOS 8086

Pinout

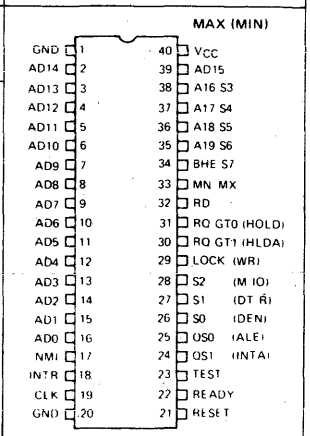

8-Bit Microprocessor

Part Number	Features
Q1CY84 80C88	• Compatible with NMOS 8088 • Low power operation: — 10 mA/MHz operating current — 500 μA standby current • Static DC to 5 MHz operation • Software compatible with 80C86/8086/8088 • Hardware/software compatible with NMOS 8086

Pinout

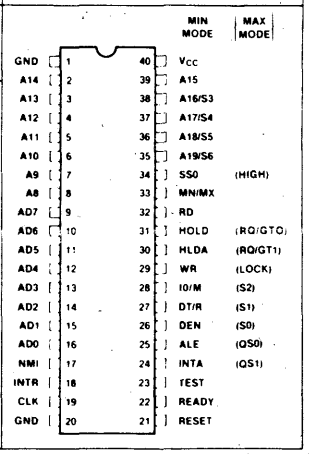

© IC MASTER 1984

Serial Communication Interface

Part Number	Features
82C52	• UART/Bit rate generator in a single 28-pin package • Operates from DC to 1 Mbaud with an asynchronous 16X clock • 72 programmable bit rates • Vectored interrupt capability • Low power operation: — 1 mA/MHz operating current, typical • 40-pin version available (HD-6406, see page 20)

Pinout

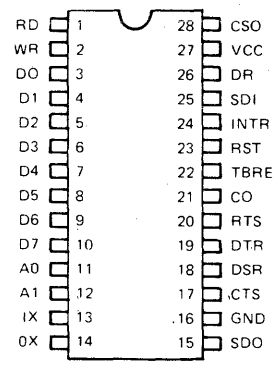

Programmable Interval Timer

Part Number	Features
82C54	• Compatible with NMOS 8254 • Enhanced version of NMOS 8253 • Three independent 16-bit counters • Six programmable counter modes • Completely TTL compatible • 8 MHz count frequency • Low power operation: — 10 mA @ 8 MHz count frequency — 10 μA standby current

Pinout

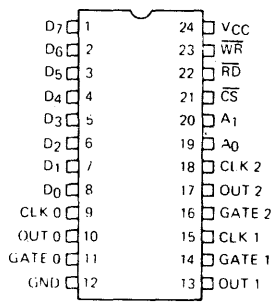

Programmable Peripheral Interface

Part Number	Features
82C55A	• Full compatibility with industry standard NMOS 8255A • 24 programmable I/0 pins • Handshake mode supported • Bit set/reset capability • Bus-hold circuits on all ports eliminate need for pull up/pull down resistors • ICC standby: 10 μA, maximum

Pinout

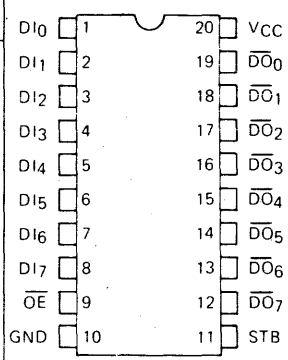

© IC MASTER 1984

Priority Interrupt Controller		Pinout
Part Number	**Features**	
82C59A	• Compatible with NMOS 8259A • Eight maskable interrupt inputs • Cascade circuits allow up to 64 interrupt inputs with no additional circuitry • Supports both 8080/85 and 80C86/88 input formats • Standby current: 10 μA, maximum	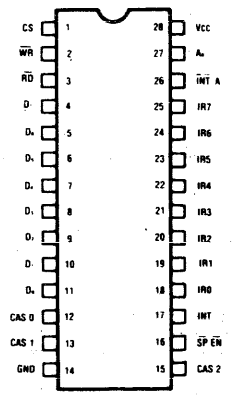

DMA Controller		Pinout
Part Number	**Features**	
COMING SOON 82C37A	• Compatible with NMOS 8237A • Provides control for direct memory access operation • Up to 1.6 Mb/s transfer rate • Four independently programmable DMA channels • Low power operation	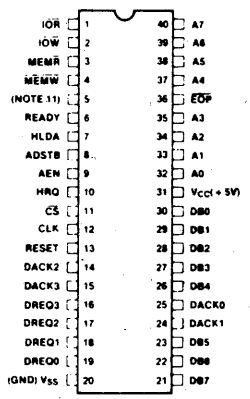

© IC MASTER 1984

Octal Latching Bus Driver

Part Number	Features
82C82	• Bipolar 8282 compatible • Propagation delay guaranteed: 35 ns maximum —Full temperature range —10% power supply tolerances — Load capacitance: 300 pf • Gated inputs reduce operating power • ICCSB: 10 μA maximum

Pinout

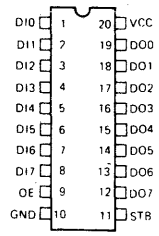

Octal Latching Inverting Bus Driver

Part Number	Features
COMING SOON 82C83	• Bipolar 8283 compatible • Full eight-bit latching buffer with inverted data output • Guaranteed propagation delay: 35 ns @ C_L = 300 pf • Gated inputs reduce operating power • ICCSB: 10 μA maximum

Pinout

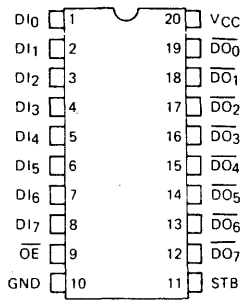

Clock Generator/Driver

Part Number	Features
82C84A	• Compatible with bipolar 8284A • Output frequencies up to 8 MHz • Provides ready synchronization • Parallel resonant crystal • ICC operating: 40 mA @ 8MHz system frequency

Pinout

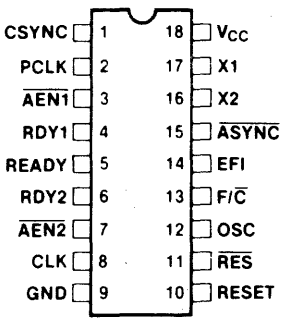

Octal Transceiver

Part Number	Features
COMING SOON 82C86	• Compatible with bipolar 8286 • Eight-bit bidirectional bus transceiver • Guaranteed propagation delay: 35 ns @ C_L = 300 pf • Gated inputs reduce power dissipation • ICCSB: 10 μA maximum

Pinout

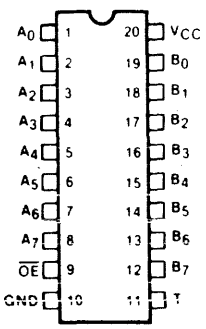

© IC MASTER 1984

Octal Inverting Transceiver		Pinout
Part Number	**Features**	
COMING SOON 82C87	• Bipolar 8287 compatible • Eight-bit bidirectional bus transceiver with inverting data outputs • Guaranteed propagation delay: 35 ns @ C_L = 300 pf • Gated inputs reduce operating power dissipation • ICCSB: 10 μA maximum	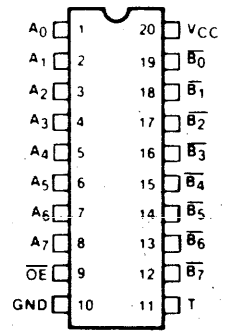

Bus Controller		Pinout
Part Number	**Features**	
82C88	• Pin compatible with bipolar 8288 • Generates system control signals for maximum mode 80C86/88, 8086/88 • Full TTL compatibility • Bipolar drive capability • Low power operation: — ICC standby: 10 μA maximum — ICC operating: 1 mA/MHz maximum	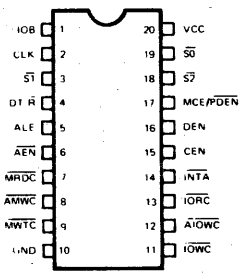

Bus Arbiter		Pinout
Part Number	**Features**	
COMING SOON 82C89	• Pin compatible with bipolar 8289 • Provides bus control arbitration in multi-master processor systems • Low power operation — ICC standby: 10 μA — ICC operating: 1 mA/MHz	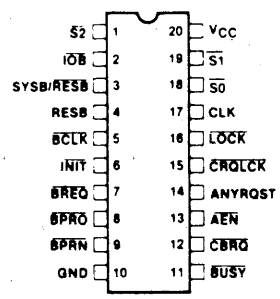

© IC MASTER 1984

CMOS 80C86 Family

80C86 CMOS 16-Bit Microprocessor

Intel	Description	Harris Equivalent
D8086	• Commercial temp, ceramic or plastic pkg	CD80C86 or CP80C86
ID8086	• Industrial temp, ceramic or plastic pkg	ID80C86 or IP80C86
MD8086/B	• Military temp range, ceramic pkg:	
	— with MIL-STD-883B processing	MD80C86/B
	— without MIL-STD-883B processing	MD80C86

82C54 CMOS Programmable Timer

Intel	Description	Harris Equivalent
P8254	• Commercial temp, plastic pkg	CP82C54
D8254	• Commercial temp, ceramic pkg	CD82C54
MD8254/B	• Military temp range, ceramic pkg:	
	— with MIL-STD-883B processing	MD82C54/B
	— without MIL-STD-883B processing	MD82C54

82C55A CMOS Programmable Peripheral Interface (PPI)

Intel	Description	Harris Equivalent
P8255A	• Commercial temp, plastic pkg, 2 MHz	CP82C55A
D8255A	• Commercial temp, ceramic pkg, 2 MHz	CD82C55A
P8255A-5	• Commercial temp, plastic pkg, 3 MHz	CP82C55A
D8255A-5	• Commercial temp, ceramic pkg, 3 MHz	CD82C55A
ID8255A	• Industrial temp, ceramic pkg, 2 MHz	IP82C55A or ID82C55A
MD8255A/B	• Military temp range, ceramic pkg	
	— with MIL-STD-883B processing	MD82C55A/B
	— without MIL-STD-883B processing	MD82C55A

82C59A CMOS Interrupt Controller

Intel	Description	Harris Equivalent
D8259A	• Commercial temp range, ceramic pkg, 5 MHz	CD82C59A
P8259A	• Commercial temp range, plastic pkg, 5 MHz	CP82C59A
D8259A-2	• Commercial temp range, ceramic pkg, 8 MHz	CD82C59A
P8259A-2	• Commercial temp range, plastic pkg, 8 MHz	CP82C59A
D8259A-8	• Commercial temp range, ceramic pkg, 2 MHz	CD82C59A
P8259A-8	• Commercial temp range, plastic pkg, 2 MHz	CP82C59A
ID8259A	• Industrial temp range, ceramic or plastic pkg	IP82C59A or ID82C59A
MD8259A	• Military temp range, ceramic pkg:	
	— with MIL-STD-883B processing	MD82C59A/B
	— without MIL-STD-883B processing	MD82C59A

© IC MASTER 1984

CMOS 80C86 Family

82C82 CMOS Octal Non-Inverting Latching Bus Driver

Intel	Description	Harris Equivalent
D8282	• Commercial temp range ceramic pkg	CD82C82
P8282	• Commercial temp range, plastic pkg	CP82C82
ID8282	• Industrial temp range, ceramic pkg	IP82C82 or ID82C82
MD8282/B	• Military temp range, ceramic pkg:	
	— with MIL-STD-883B processing	MD82C82/B
	— without MIL-STD-883B processing	MD82C82

82C84A CMOS Clock Generator Driver

Intel	Description	Harris Equivalent
P8284A	• Commercial temp, plastic pkg	CP82C84A
D8284A	• Commercial temp, ceramic pkg	CD82C84A
ID8284A	• Industrial temp, ceramic pkg	IP82C84A or ID82C84A
MD8284A/B	• Military temp, ceramic pkg:	
	— with MIL-STD-883B processing	MD82C84A/B
	— without MIL-STD-883B processing	MD82C84A

82C88 CMOS Bus Controller

Intel	Description	Harris Equivalent
D8288	• Commercial temp, ceramic or plastic pkg	DP82C88 or CD82C88
ID8288	• Industrial temp, ceramic pkg	IP82C88 or ID82C88
MD8288/B	• Military temp, ceramic pkg:	
	— with MIL-STD-883B processing	MD82C88/B
	— without MIL-STD-883B processing	MD82C88

© IC MASTER 1984

12-Bit Microprocessor		Pinout
Part Number	**Features**	
HM-6100	• Single phase clock • On-chip crystal oscillator • PDP-8/E software compatible • 12-bit data and instruction word	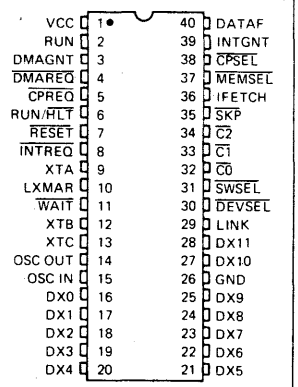

Parallel Interface Element (PIE)		Pinout
Part Number	**Features**	
HD-6101	• Control for two 12-bit input ports • Control for two 12-bit output ports • Priority vectored interrupts • 16 instructions for flexible PIE control	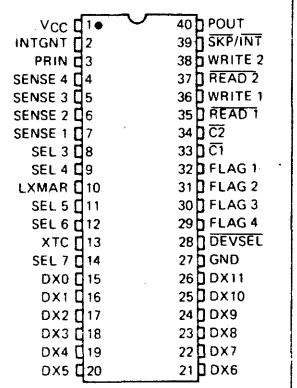

© IC MASTER 1984

12-Bit Microprocessor		Pinout
Part Number	**Features**	
HD-6120	• High-speed upgrade of HD-6100 • Redesigned architecture provides: — increased throughput due to variable number of T states/cycle — simplified I/O control signals • PDP-8/E software compatible	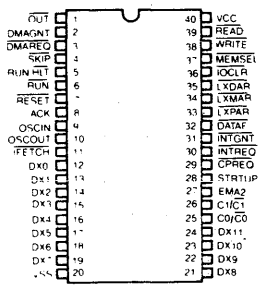

Input/output Controller		Pinout
Part Number	**Features**	
HD-6121	• HD-6120 compatible interface • Controls up to five 12-bit I/O ports • All ports can be either inputs or outputs • Independent device address and data direction programming • Strobe outputs are programmable high or low true • Low power operation	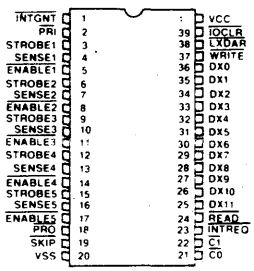

© IC MASTER 1984

Hex Latching Bus Driver					Pinout
Part Number	Capacitance Drive	Propagation Delay	Current Source	Current Sink	
HD-6431	300 pF	75 ns	4 mA	6 mA	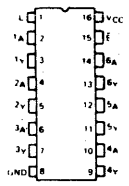

Hex Bi-Directional Bus Driver					Pinout
Part Number	Capacitance Drive	Propagation Delay	Current Source	Current Sink	
HD-6432	300 pF	55 ns	4 mA	6 mA	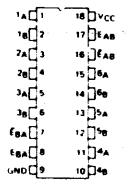

Quad Bus Separator/Driver					Pinout
Part Number	Capacitance Drive	Propagation Delay	Current Source	Current Sink	
HD-6433	300 pF	50 ns	4 mA	6 mA	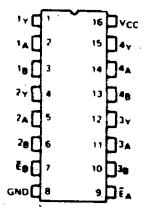

Octal Resettable Latching Bus Driver					Pinout
Part Number	Capacitance Drive	Propagation Delay	Current Source	Current Sink	
HD-6434	300 pF	50 ns	6 mA	9 mA	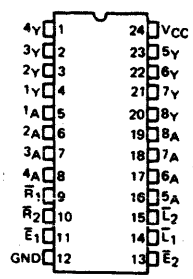

© IC MASTER 1984

Octal Bus Driver					Pinout
Part Number	Capacitance Drive	Propagation Delay	Current Source	Current Sink	
HD-6436	300 pF	55 ns	6 mA	9 mA	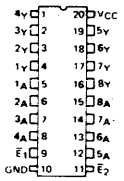

Latching 3 to 8 Line Decoder/Driver					Pinout
Part Number	Capacitance Drive	Propagation Delay	Current Source	Current Sink	
HD-6440	200 pF	100 ns	2 mA	2.4 mA	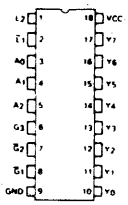

Hex Bus Driver					Pinout
Part Number	Capacitance Drive	Propagation Delay	Current Source	Current Sink	
HD-6495	300 pF	45 ns	4 mA	6 mA	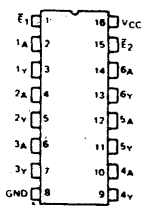

© IC MASTER 1984

Bit Rate Generator (BRG)

Part Number	Features
HD-4702	• Programmable bit rate selection • 13 commonly used bit rates • Uses standard 2.4576 MHz crystal • 5 mW typical power dissipation

Pinout

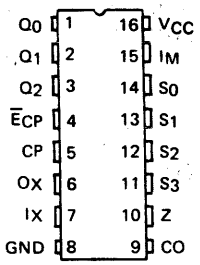

Universal Asynchronous Receiver/Transmitter (UART)

Part Number	Features
HD-6402	• Operates from 0 to 125 KBaud • Programmable word length, stop bits and parity • Industry standard pinout • Single +5 V power supply

Pinout

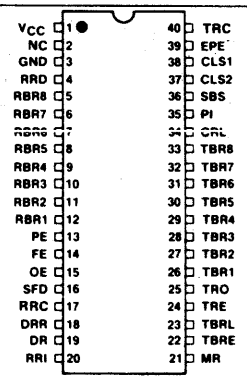

Programmable Asynchronous Communications Interface

Part Number	Features
HD-6406	• UART/Bit rate generator in a single 40-pin package • Data rates from DC to 1 Mbaud with an asynchronous 16X clock • 72 programmable bit rates • Complete modem interface signals • DMA handshaking operation • Low power operation: — 1 mA/MHz, typical • 28-pin version available (82C52, see page 14)

Pinout

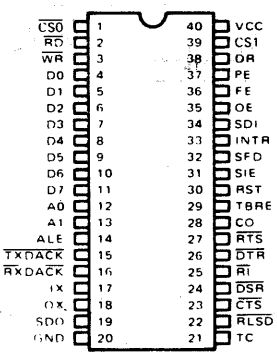

Asynchronous Serial Manchester Adapter (ASMA)

Part Number	Features
HD-6408	• 1 Mb/s data rate • Sync identification and lock-in • Clock recovery • Manchester II encode and decode • Local ARPA Networks

Pinout

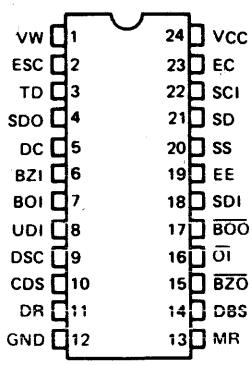

© IC MASTER 1984

Manchester Encoder/Decoder (MED)		Pinout
Part Number	**Features**	
HD-6409	• 1 Mb/s data rate • Digital PLL clock recovery • On chip oscillator • Manchester II encode and decode • Military temperature range available	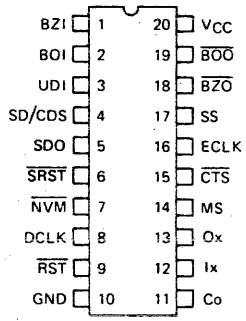

Manchester Encoder/Decoder (MED)		Pinout
Part Number	**Features**	
HD-15530	• Support of MIL-STD-1553 • 1.25 Mb/s data rate • Sync identification and lock-in • Clock recovery • Manchester II encode, decode • Separate encode and decode • Low operating power: 50 mW @ 5 Volts • Full military temperature range	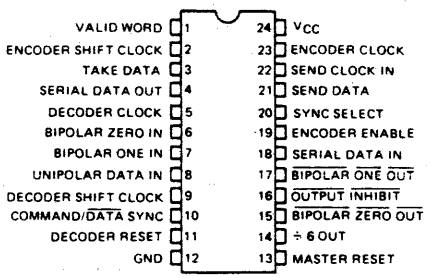

Manchester Encoder/Decoder (MED)		Pinout
Part Number	**Features**	
HD-15531	• Support of MIL-STD-1553 • 1.25 Mb/s data rate • 2.5 Mb/s option (HD-15531B) • Sync identification and lock-in • Clock recovery • Variable frame length to 32 bits • Manchester II encode, decode • Separate encode and decode • Low operating power: 50 mW @ 5 Volts • Full military temperature range	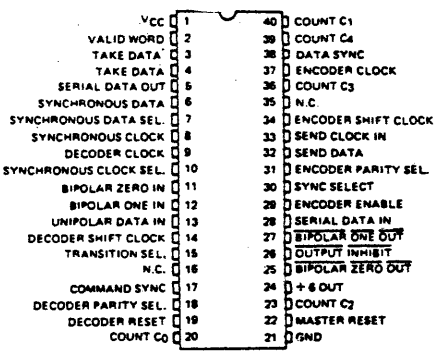

© IC MASTER 1984

82C52

CMOS Serial Controller Interface

Preview

Features

- SINGLE CHIP UART/BRG
- DC TO 16MHz OPERATION
- CRYSTAL OR EXTERNAL CLOCK INPUT
- ON CHIP BAUD RATE GENERATOR
  . . . 72 SELECTABLE BAUD RATES
- INTERRUPT MODE WITH MASK CAPABILITY
- MICROPROCESSOR BUS ORIENTED INTERFACE
- 80C86 COMPATIBLE
- SCALED SAJI IV CMOS PROCESS
- SINGLE 5V POWER SUPPLY
- LOW POWER – 1mA/MHz TYPICAL
- MODEM INTERFACE
- LINE BREAK GENERATION AND DETECTION
- LOOPBACK AND ECHO MODES

Pinout

Top View

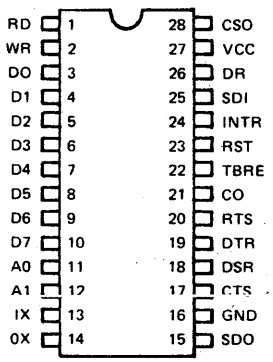

Description

The 82C52 is a high performance programmable Universal Asynchronous Receiver/Transmitter (UART) and Baud Rate Generator (BRG) on a single chip. Utilizing the Harris advanced Scaled SAJI IV CMOS process, the 82C52 will support data rates from D.C. to 1M baud/sec asynchronously with a 16X clock (0-16 MHz clock frequency).

The on-chip Baud Rate Generator can be programmed for any one of 72 different baud rates using a single industry standard crystal or external frequency source. A unique pre-scale divide circuit has been designed to provide standard RS-232-C baud rates when using any one of three industry standard baud rate crystals (1.8432 MHz, 2.4576 MHz, or 3.072MHz).

A programmable buffered clock output (CO) is available and can be programmed to provide either a 1X or 16X clock for general purpose system usage.

Inputs and outputs have been designed with full TTL/CMOS compatibility in order to facilitate mixed TTL/NMOS/CMOS system design.

Block Diagram

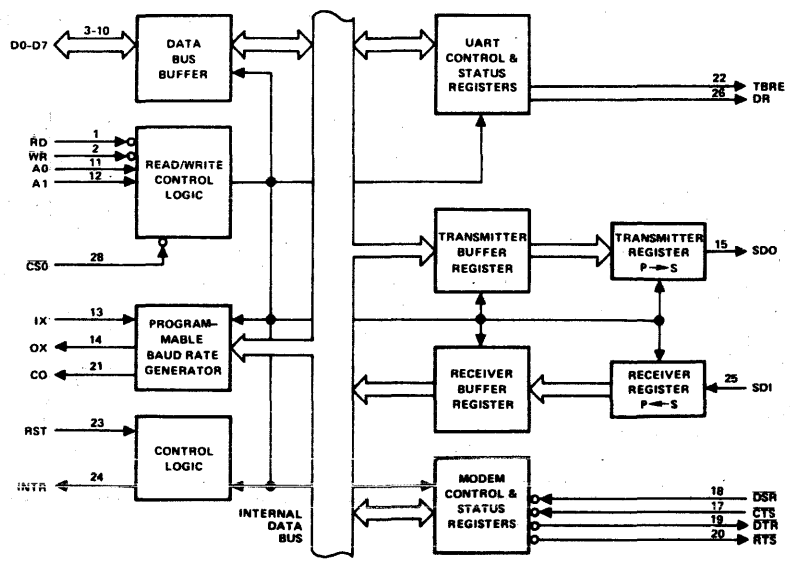

VCC - PIN 27
GND - PIN 16

CAUTION: These devices are sensitive to electrostatic discharge. Users should follow standard IC Handling Procedures.

Copyright © Harris Corporation 1983

© IC MASTER 1984

HARRIS

HD-6406

CMOS Programmable Asynchronous Communication Interface

Advance Information

Features

- SINGLE CHIP UART/BRG
- DC TO 16MHz OPERATION
- CRYSTAL OR EXTERNAL CLOCK INPUT
- ON CHIP BAUD RATE GENERATOR ...72 SELECTABLE BAUD RATES
- DMA OR VECTORED INTERRUPT MODE
- MASKABLE INTERRUPTS
- MICROPROCESSOR BUS ORIENTED INTERFACE
- SCALED SAJI IV CMOS PROCESS
- SINGLE 5V POWER SUPPLY
- LOW POWER – 1mA/MHz TYPICAL
- COMPLETE MODEM INTERFACE
- LINE BREAK GENERATION AND DETECTION
- LOOPBACK AND ECHO MODES

Pinout

Top View

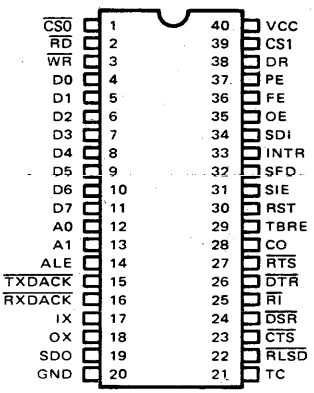

Description

The HD-6406 (PACI) is a high performance programmable Universal Asynchronous Receiver/Transmitter (UART) and Baud Rate Generator (BRG) on a single chip. Utilizing Harris Semiconductor's advanced Scaled SAJI IV CMOS process, the PACI will support data rates from DC to 1Mbaud (0-16MHz clock). In addition to all standard UART functions, the PACI includes a complete Data Communications Equipment (DCE) interface.

Provision is made for DMA control of the PACI so that operation at the higher data rates is not hindered by slow microprocessor response times. An ALE control input permits direct interfacing to multiplexed data/address buses common to many microprocessors.

The interrupt structure of the PACI is user-programmable and can be configured to provide a single interrupt for any status change. A subsequent read of an internal status register will identify the source of the interrupt. If desired, the PACI can also provide separate hardware interrupt outputs for the receiver, transmitter and modem status changes. Separate error condition outputs can be used to pinpoint the exact cause of any detected error condition.

Block Diagram

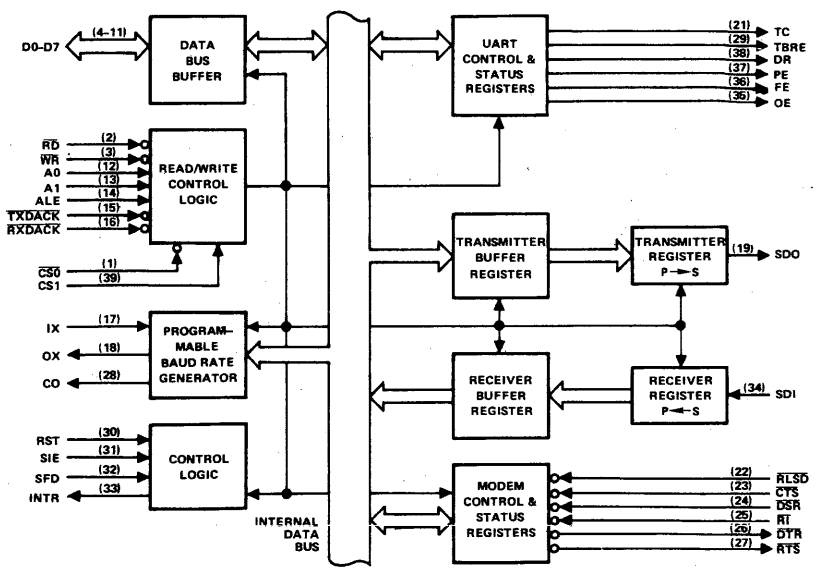

CAUTION: These devices are sensitive to electrostatic discharge. Users should follow standard IC Handling Procedures.

Copyright © Harris Corporation 1983

HD-6408

CMOS Asynchronous Serial Manchester Adapter (ASMA)

Features

- LOW BIT ERROR RATE
- ONE MEGABIT/SEC DATA RATE
- SYNC IDENTIFICATION AND LOCK-IN
- CLOCK RECOVERY
- MANCHESTER II ENCODE, DECODE
- SEPARATE ENCODE AND DECODE
- LOW OPERATING POWER: 50mW AT 5 VOLTS
- SINGLE POWER SUPPLY
- 24 PIN PACKAGE

Pinout

TOP VIEW

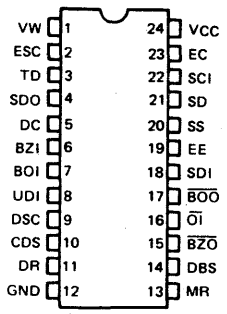

Description

The HD-6408 is a CMOS/LSI Manchester Encoder/Decoder for creating a very high speed asynchronous serial data bus. The Encoder converts serial NRZ data (typically from a shift register) to Manchester II encoded data adding a sync pulse and parity bit. The Decoder recognizes this sync pulse and identifies it as a Command Sync or a Data Sync. The data is then decoded and shifted out in the NRZ code (typically into a shift register). Finally, the parity bit is checked. If there were no Manchester or parity errors the Decoder responds with a valid word signal. This Decoder puts the Manchester code to full use to provide clock recovery and excellent noise immunity at these very high speeds.

The HD-6408 can be used in many commercial applications such as, security systems, environmental control systems, serial data links and many others. It utilizes a single 12X clock and achieves data rates of up to one million bits per second with a very minimum overhead of only 4 bits out of 20, leaving 16 bits for data.

Block Diagrams

ENCODER

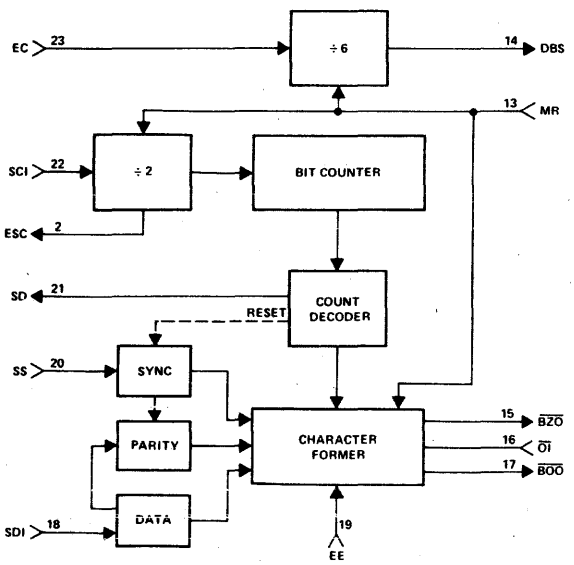

DECODER

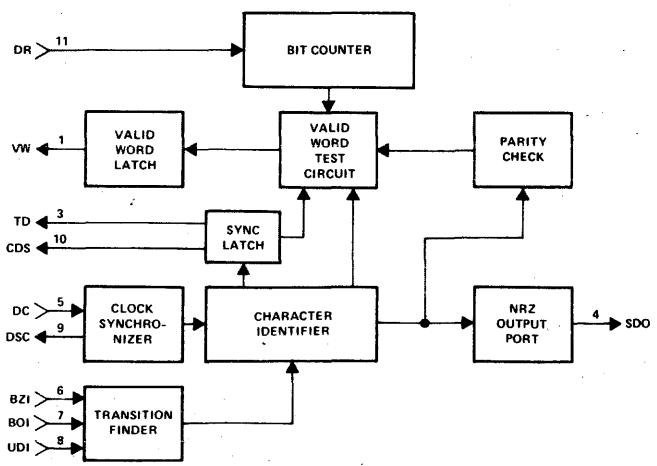

CAUTION: These devices are sensitive to electronic discharge. Proper I.C. handling procedures should be followed.

Copyright © Harris Corporation 1983

© IC MASTER 1984

HARRIS

HD-6409

CMOS Manchester Encoder-Decoder (MED)

Features

- CONVERTER OR REPEATER MODE
- INDEPENDENT MANCHESTER ENCODER AND DECODER OPERATION
- STATIC TO ONE MEGABIT/SEC DATA RATE GUARANTEED
- LOW BIT ERROR RATE
- DIGITAL PLL CLOCK RECOVERY
- ON CHIP OSCILLATOR
- SINGLE POWER SUPPLY
- LOW OPERATING POWER: 50mW AT 5 VOLTS
- INDUSTRIAL OR MILITARY TEMPERATURE RANGE
- 20 PIN PACKAGE

Pinout

TOP VIEW

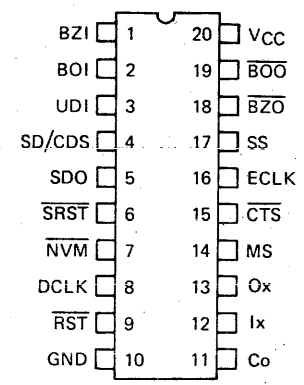

Description

The HD-6409 Manchester Encoder-Decoder (MED) is a high speed, low power device manufactured using self-aligned silicon gate technology. The device is intended for use in serial data communication, and can be operated in either of two modes. In the converter mode, the MED converts Nonreturn-to-Zero code (NRZ) into Manchester code and decodes Manchester code into Nonreturn-to-Zero code. For serial data communication, Manchester code does not have some of the deficiencies inherent in Nonreturn-to-Zero code. For instance, use of the MED on a serial line eliminates DC components, provides clock recovery, and gives a relatively high degree of noise immunity. Because the MED converts the most commonly used code (NRZ) to Manchester code, the advantages of using Manchester code are easily realized in a serial data link.

In the Repeater mode, the MED accepts Manchester code input and reconstructs it with a recovered clock. This minimizes the effects of noise on a serial data link. A digital phase lock loop generates the recovered clock. A maximum data rate of 1MHz requires only 50mW of power.

Manchester code is used in magnetic tape recording and in fiber optic communication, and generally is used where data accuracy is imperative. Because it frames blocks of data, the HD-6409 easily interfaces to protocol controllers.

Logic Symbol

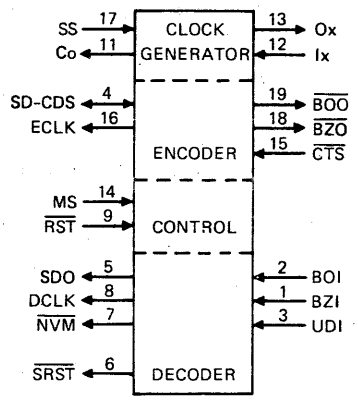

Functional Diagram

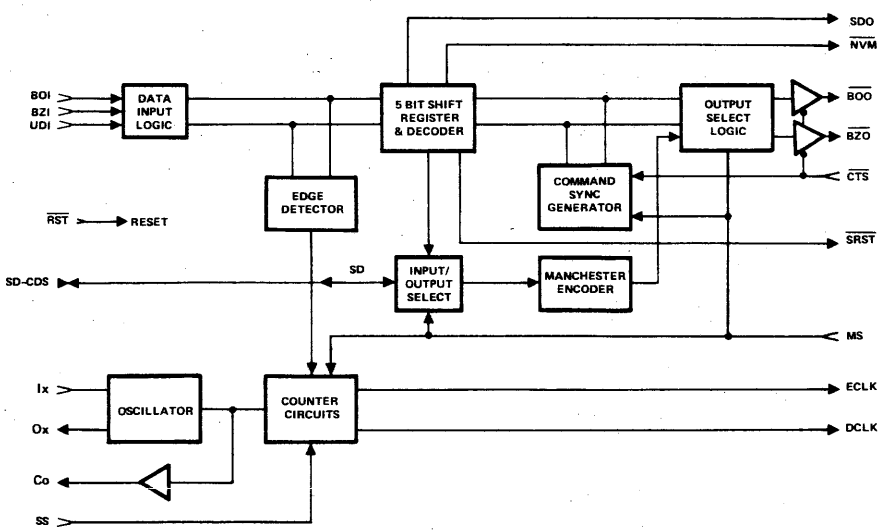

CAUTION: These devices are sensitive to electronic discharge. Proper I.C. handling procedures should be followed.

Copyright © Harris Corporation 1983

HARRIS

HD-15530

CMOS Manchester Encoder-Decoder

Features

- SUPPORT OF MIL-STD-1553
- 1.25 MEGABIT/SEC DATA RATE
- SYNC IDENTIFICATION AND LOCK-IN
- CLOCK RECOVERY
- MANCHESTER II ENCODE, DECODE
- SEPARATE ENCODE AND DECODE
- LOW OPERATING POWER: 50mW AT 5 VOLTS
- FULL MILITARY TEMPERATURE RANGE

Pinout

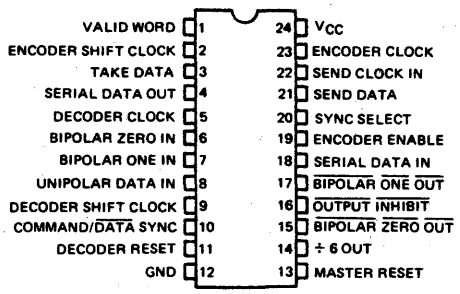

Description

The Harris HD-15530 is a high performance CMOS device intended to service the requirements of MIL-STD-1553 and similar Manchester II encoded, time division multiplexed serial data protocals. This LSI chip is divided into two sections, an Encoder and a Decoder. These sections operate completely independent of each other, except for the Master Reset function.

This circuit meets many of the requirements of MIL-STD-1553. The Encoder produces the sync pulse and the parity bit as well as the encoding of the data bits. The Decoder recognizes the sync pulse and identifies it as well as decoding the data bits and checking parity.

This integrated circuit is fully guaranteed to support the 1MHz data rate of MIL-STD-1553 over both temperature and voltage. It interfaces with CMOS, TTL or N channel support circuitry, and uses a standard 5 volt supply.

The HD-15530 can also be used in many party line digital data communications applications, such as an environmental control system driven from a single twisted pair cable or fiber optic cable throughout the building.

Block Diagrams

ENCODER

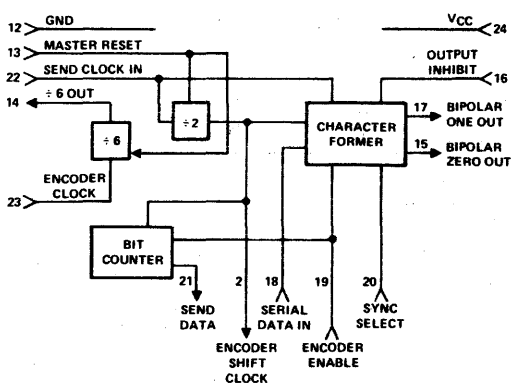

DECODER

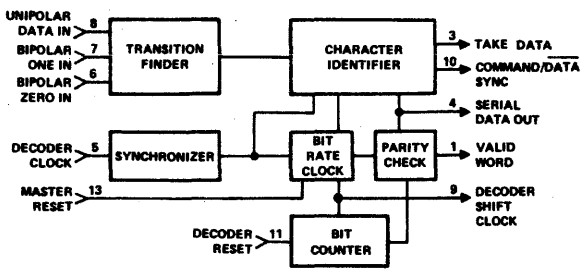

CAUTION: Electronic devices are sensitive to electrostatic discharge. Proper I.C. handling procedures should be followed.

Copyright © Harris Corporation 1983

© IC MASTER 1984

HARRIS

HD-15531B

CMOS Programmable Manchester Encoder-Decoder

Preliminary

Features

- 2.5 MEGABIT/SEC DATA RATE
- SYNC IDENTIFICATION AND LOCK-IN
- CLOCK RECOVERY
- VARIABLE FRAME LENGTH TO 32 BITS
- MANCHESTER II ENCODE AND DECODE
- HALF OR FULL DUPLEX OPERATION
- FULL MILITARY OR INDUSTRIAL TEMPERATURE RANGES
- WORD TYPE SELECT AND RECOGNITION
- DETECTS ALL SINGLE, DOUBLE, OR TRIPLE SAMPLING ERRORS

Pinout

V_{CC}	1	40	COUNT C_1
VALID WORD	2	39	COUNT C_4
TAKE DATA'	3	38	DATA SYNC
TAKE DATA	4	37	ENCODER CLOCK
SERIAL DATA OUT	5	36	COUNT C_3
SYNCHRONOUS DATA	6	35	N.C.
SYNCHRONOUS DATA SEL.	7	34	ENCODER SHIFT CLOCK
SYNCHRONOUS CLOCK	8	33	SEND CLOCK IN
DECODER CLOCK	9	32	SEND DATA
SYNCHRONOUS CLOCK SEL.	10	31	ENCODER PARITY SEL.
BIPOLAR ZERO IN	11	30	SYNC SELECT
BIPOLAR ONE IN	12	29	ENCODER ENABLE
UNIPOLAR DATA IN	13	28	SERIAL DATA IN
DECODER SHIFT CLOCK	14	27	$\overline{\text{BIPOLAR ONE OUT}}$
TRANSITION SEL	15	26	$\overline{\text{OUTPUT INHIBIT}}$
N.C.	16	25	$\overline{\text{BIPOLAR ZERO OUT}}$
COMMAND SYNC	17	24	÷6 OUT
DECODER PARITY SEL.	18	23	COUNT C_2
DECODER RESET	19	22	MASTER RESET
COUNT C_0	20	21	GND

Description

The Harris HD-15531B Programmable Manchester Encoder-Decoder (MED) is intended to be used as a high speed, low power, serial data link controller in applications where data integrity combined with low overhead is important. It is manufactured using Harris' Self Aligned Junction Isolated (SAJI) CMOS process.

This LSI chip is divided into two sections, an encoder and a decoder. These sections operate independently of each other except for the Master Reset and frame length select function. In addition to encoding/decoding of NRZ data the HD-15531B frames variable length data (2-28 bits) with one of two types of synchronization characters and a parity bit. Independent selection of even or odd parity for the encoder and decoder is included.

An internal error detection algorithm will detect all single, double or triple sampling errors. In addition, this algorithm will typically detect better than 99% of four or more errors in any one word.

Ideal applications include party line Local Area Networks as well as data acquisition systems where 8, 12 or 16 bit A/D converters are typically used for the digital transmission of data.

Block Diagrams

ENCODER

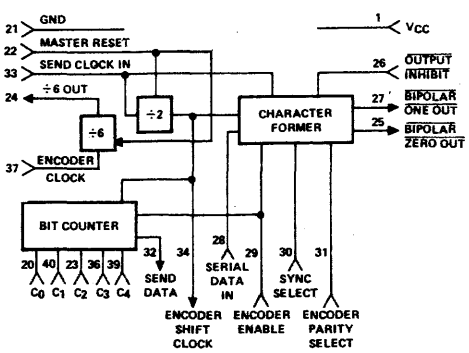

DECODER

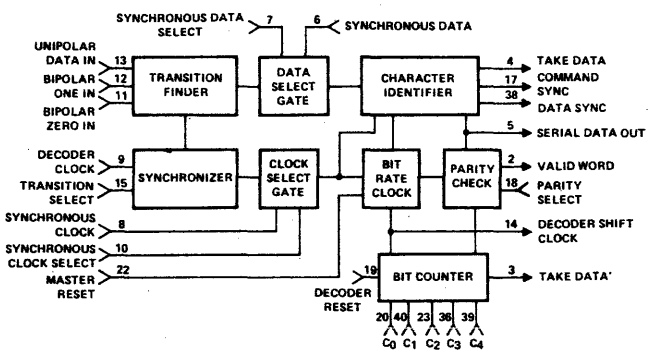

CAUTION: These devices are sensitive to electrostatic discharge. Users should follow standard IC Handling Procedures.

Copyright © Harris Corporation 1982

INTERSIL

PRELIMINARY
Specifications Subject To Change Without Notice

IM82C43
CMOS Input/Output Expander

FEATURES

- 8048/41 compatible I/O expander
- CMOS pin-for-pin replacement for standard NMOS 8243
- Low power dissipation — maximum 25mW active
- Four 4-bit I/O ports in 24-pin DIP
- Logical AND/OR directly to ports
- High output drive
- Single +5V supply

DESCRIPTION

The Intersil IM82C43 is a CMOS input/output expander equivalent to the NMOS 8243. It is designed to provide I/O expansion for the CMOS IM80C48 and NMOS 8048 families of single-chip microcomputers.

The 24-pin IM82C43 provides four 4-bit bidirectional I/O ports: 8048/41 instructions control bidirectional transfers between the 82C43 and the 8048 family microcomputers, and can execute logical AND/OR operations directly on the data contained in the 82C43 ports.

LOGICAL BLOCK DIAGRAM

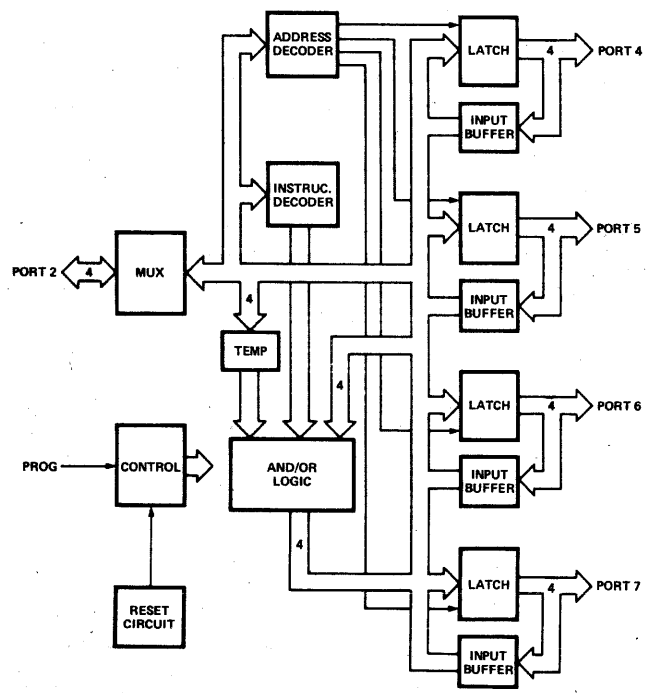

PIN CONFIGURATION

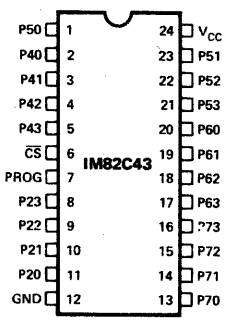

(outline drawings JG, PG)

ORDERING INFORMATION

PART NO.	PACKAGE
IM82C43CJG	24 PIN CERDIP
IM82C43CPG	24 PIN PLASTIC

© IC MASTER 1984

MOTOROLA
SEMICONDUCTORS
3501 ED BLUESTEIN BLVD., AUSTIN, TEXAS 78721

8-Bit MCUs
8-Bit MPUs
8-Bit Peripherals

Motorola has an unequaled line of single-chip microcomputers (MCUs) in depth and breath. By utilizing the "core concept", unlimited MCU possibilities are created while the processing element, or core, remains constant.

THE M6801 FAMILY PROCESSORS: HIGH-PERFORMANCE MCUs

Frequency				Memory
1 MHz	1.25 MHz	1.5 MHz	2 MHz	
MC6801	MC6801-1	MC68A01	MC68B01	2048 ROM, 128 Bytes RAM, Expansion Bus
MC68701	MC68701-1	–	–	2048 EPROM, 128 Bytes RAM, Expansion Bus
MC6803	MC6803-1	MC68A03	MC68B03	No ROM, 128 Bytes RAM, Expansion Bus
MC6803E	MC6803E-1	–	–	No ROM, 128 Bytes RAM, External Clock, Expansion Bus
MC6801U4	MC6801U4-1	–	–	4096 ROM, 192 Bytes RAM, Expansion Bus
MC68701U4	MC68701U4-1	–	–	4096 EPROM, 192 Bytes RAM, Expansion Bus
MC68701U5	MC68701U5-1	–	–	4096 EPROM, 192 Bytes RAM, Expansion Bus, Security
MC6803U4	MC6803U4-1	–	–	No ROM, 192 Bytes RAM, Expansion Bus
MC68120	MC68120-1	–	–	2048 ROM, 128 Bytes Dual-Port RAM, Expansion Bus
MC68121	MC68121-1	–	–	No ROM, 128 Bytes Dual-Port RAM, Expansion Bus

6801 SPECTRUM

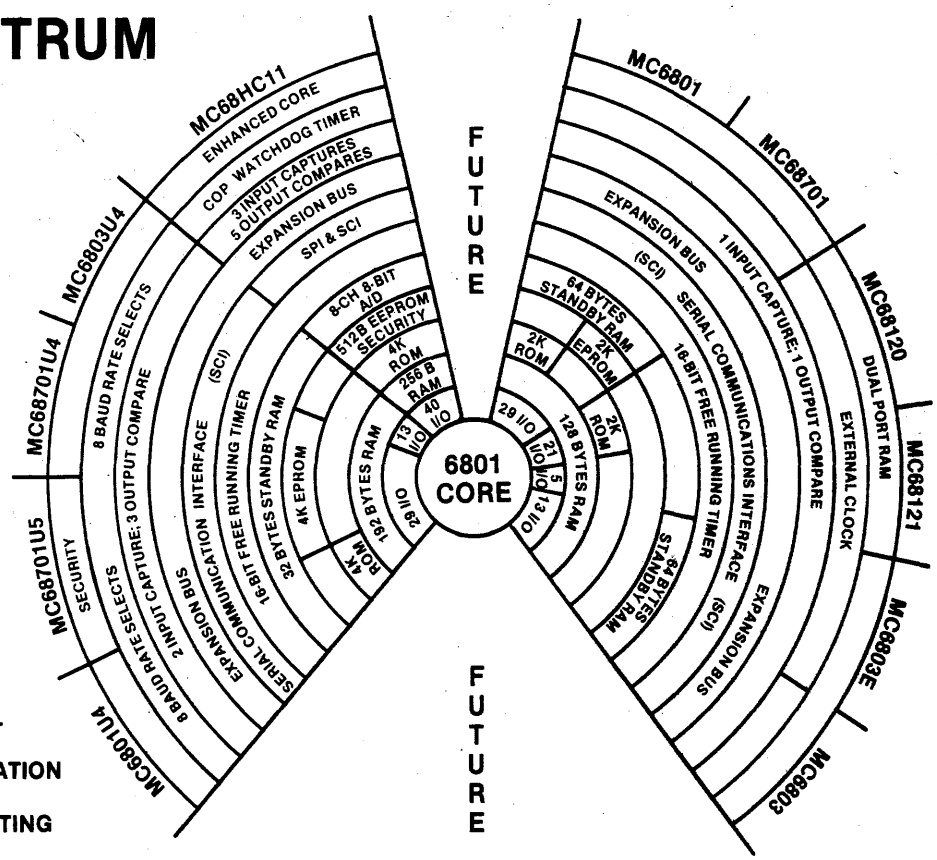

LEGEND

B = BYTES
STBY = STANDBY
CH = CHANNEL
SPI = SERIAL PERIPHERAL INTERFACE
SCI = SERIAL COMMUNICATION INTERFACE
COP = COMPUTER OPERATING PROPERLY

© IC MASTER 1984

THE HMOS M6805 FAMILY PROCESSORS: MEDIUM-PERFORMANCE MCUs

Device	No. of Pins	Memory (Bytes) ROM	EPROM	RAM	I/O Lines	Special Features
MC6805P2	28	1100	–	64	20 Programmable Bidirectional	Self-Check
MC6805P4	28	1100	–	112	20 Programmable Bidirectional	Self-Check, Standby RAM
MC6805R2	40	2048	–	64	2 to 5 Inputs, 24 Programmable Bidirectional	1 to 4 Channel 8-Bit A/D, Self-Check
MC6805R3	40	3776	–	112	2 to 5 Inputs, 24 Programmable Bidirectional	1 to 4 Channel 8-Bit A/D, Self-Check
MC6805T2	28	2508	–	64	2 Special Function, 19 Programmable Bidirectional	PPL, Self-Check
MC6805U2	40	2048	–	64	8 Inputs, 24 Programmable Bidirectional	Self-Check
MC6805U3	40	3776	–	112	8 Inputs, 24 Programmable Bidirectional	Self-Check
MC68705P3	28	–	1804	112	20 Programmable Bidirectional	Self-Programming Bootstrap
MC68705P5	28	–	1804	112	20 Programmable Bidirectional	Self-Programming Bootstrap, Security
MC6805P6	28	1804	–	64	20 Programmable Bidirectional	Self-Check
MC6805R3	40	–	3776	112	2 to 5 Inputs, 24 Programmable Bidirectional	1 to 4 Channel 8-Bit A/D Self-Check
MC68705R5	40	–	3776	112	2 to 5 Inputs, 24 Programmable Bidirectional	1 to 4 Channel 8-Bit A/D Self-Programming Bootstrap, Security
MC68705U3	40	–	3776	112	8 Inputs, 24 Programmable Bidirectional	Self-Programming Bootstrap
MC68705U5	40	0	3776	112	8 Inputs, 24 Programmable Bidirectional	Self-Programming Bootstrap, Security

6805 SPECTRUM

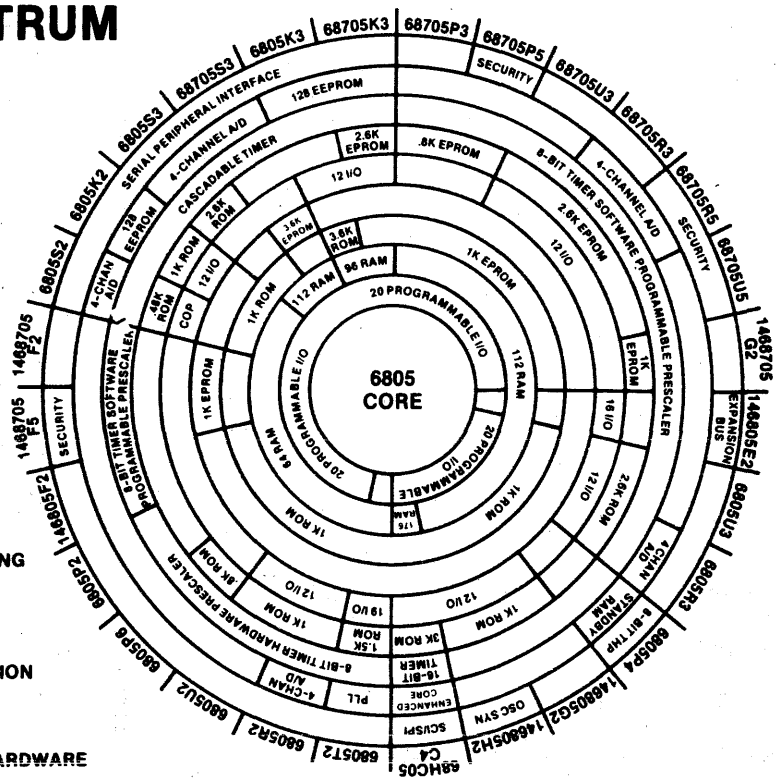

LEGEND

B = BYTE
CHAN = CHANNEL
COP = COMPUTER OPERATING PROPERLY
I/O = INPUT OUTPUT
OSC SYN = OSCILLATOR SYNTHESIZER
PLL = PHASE LOCK LOOP
SCI = SERIAL COMMUNICATION INTERFACE
SPI = SERIAL PERIPHERAL INTERFACE

8-BIT THP = 8-BIT TIMER HARDWARE PRESCALER

MOTOROLA *Semiconductor Products Inc.*

© IC MASTER 1984

THE CMOS M146805 FAMILY PROCESSORS: MEDIUM-PERFORMANCE MCUs

Device	No. of Pins	Memory (Bytes) ROM	RAM	EPROM	I/O Lines	Special Features
MC68HC05C4	40	4096	176	–	24 Programmable Bidirectional	SPI, SCI
MC146805E2	40	–	112	–	16 Programmable Bidirectional	External Bus
MC146805F2	28	1089	64	–	16 Programmable Bidirectional	Self-Check
MC146805G2	40	2106	112	–	32 Programmable Bidirectional	Self-Check
MC146805H2	40	2106	112	–	32 Programmable Bidirectional	Freq. Synthesis
MC1468705F2	28	–	64	1089	16 Programmable Bidirectional	Bootstrap
MC1468705F5	28	–	64	1089	16 Programmable Bidirectional	Bootstrap, Security
MC146805G2	40	–	–	2106	32 Programmable Bidirectional	Bootstrap

CMOS '05 AND CMOS '04 SPECTRUM

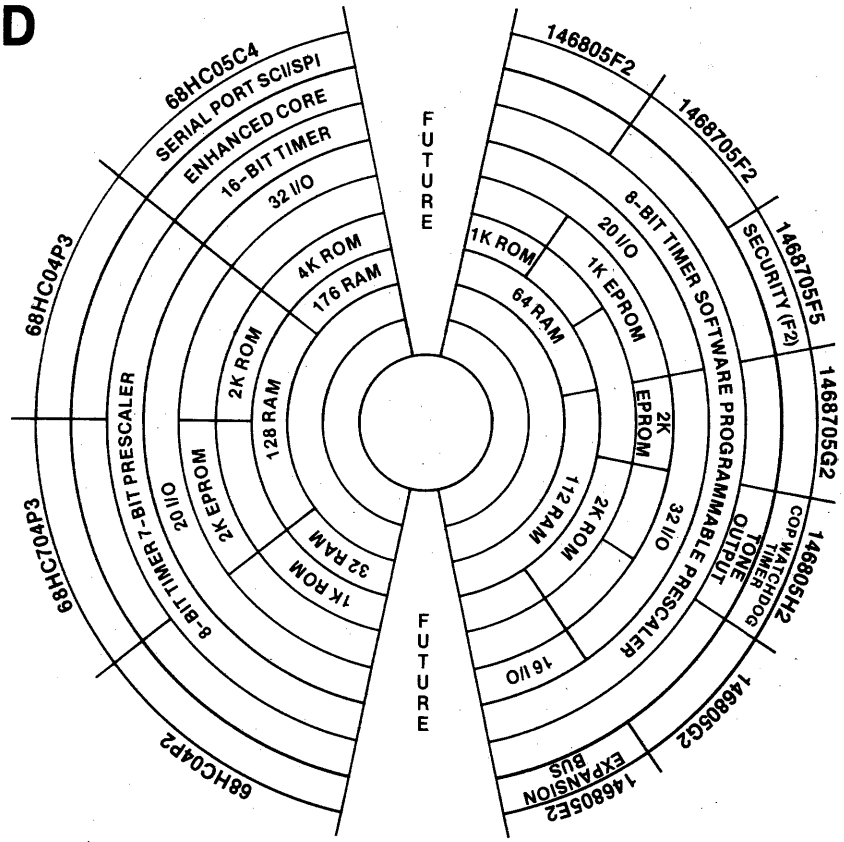

LEGEND

SPI = SERIAL PERIPHERAL INTERFACE
SCI = SERIAL COMMUNICATION INTERFACE
COP = COMPUTER OPERATING PROPERLY

© IC MASTER 1984

THE M6804 FAMILY PROCESSORS: VLE MCUs (Very Low End)

Device	No. of Pins	Memory (Bytes) ROM	RAM	EPROM	I/O Lines	Special Features
CMOS						
MC68HC04P2	28	1024	–	32	20 Programmable Bidirectional	Self-Check, 64 Bytes Data ROM
MC68HC04P3	28	2048	–	128	20 Programmable Bidirectional	Self-Check, 64 Bytes Data ROM
MC68HC704P3	28	–	2048	128	20 Programmable Bidirectional	Bootstrap, Self-Check
HMOS						
MC6804J2	20	1024	–	32	14 Programmable Bidirectional	Self-Check, 64 Bytes Data ROM
MC6804P2	28	1024	–	32	20 Programmable Bidirectional	Self-Check, 64 Bytes Data ROM
MC68704P2	28	–	1024	32	20 Programmable Bidirectional	Bootstrap, Self-Check

'04 FAMILY SPECTRUM

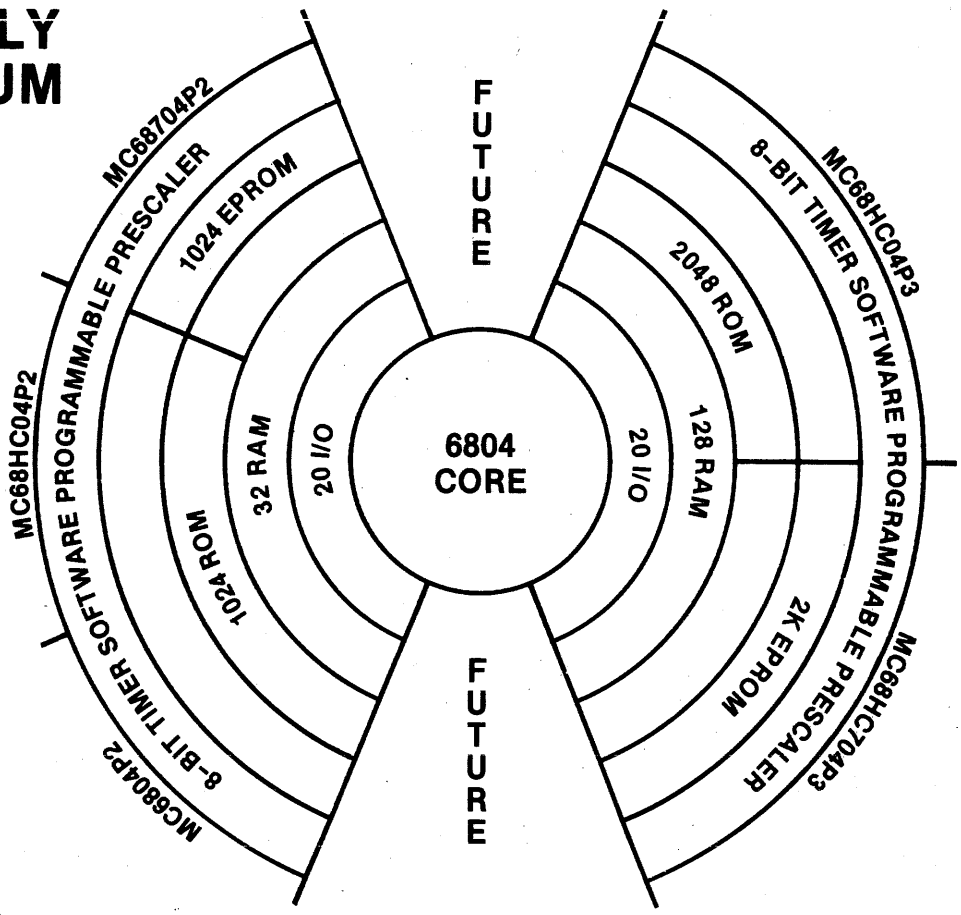

© IC MASTER 1984

THE M6809 FAMILY PROCESSORS: HIGH-PERFORMANCE MPUs

PROCESSORS

Device	Features
MC6809	On-Chip Oscillator
MC6809E	External Clocking for Synchronization of Multiprocessor Systems

THE M6800 FAMILY

Device	Function
MC6800	MPU
MC6802	MPU (with Clock, RAM)
MC6808	MPU (with Clock)

MPU PERIPHERALS

Device	Function
MCM6810	128×8 Static RAM
MC6821	Peripheral Interface Adapter
MC6822	Industrial Interface Adapter
MC6828*	Priority Interrupt Controller
MC6829	Memory Management Unit
MCM68HC34	256 Byte Dual Port RAM
MC6835	CRT Controller with ROM
MCM6836	CREEM Comb. ROM EEPROM Memory
MC6839	Floating Point ROM (IEEE Standard Draft 6.0)
MC6840	Programmable Timer
MC6843	Floppy-Disk Controller
MC6844	Direct Memory Access Controller
MC6845	CRT Controller
MC6846	ROM-I/O-Timer
MC6847, Y	Video Display Generator
MC6850	Asynchronous Interface Adapter
MC6852	Synchronous Serial Data Adapter
MC6854	Advanced Data Link Controller
MC6859	Data Security Device
MC6860**	Digital Modem
MC6862**	Digital Modulation
MC68488	General-Purpose Interface Adapter

* Motorola Digital Bipolar
** Motorola Logic and Special Functions

PRE-PROGRAMMED ROM-BASED MICROCOMPUTERS

Device	Source	Function
MC6801L1	MC6801	LILbug Monitor
MC6801G1	MC6801	LILbug Monitor
MC6805P2P2	MC6805P2	Monitor and Keyboard Encoder
MC6805P2P3	MC6805P2	Monitor and Game Plus
MC6805P2P4	MC6805P2	Monitor and Game (XTAL Osc)
MC6805R2L1	MC6805R2	Monitor and DVM
MC6805U2P2	MC6805U2	Monitor and Keyboard Encoder
MC6805P4P1*	MC6805P4	Mini-Monitor and Custom
MC6805T2P1	MC6805T2	Monitor and TV-Demo
MC6805T2P2	MC6805T2	Monitor and Ham Radio
MC146805G2P1	MC146805G2	Monitor and Bicycle Component
MC146805F2P1	MC146805F2	Monitor and Keyless Entry Demo.
MC68120L1	MC68120	UNICORN Monitor
MC6801U4L1	MC6801U4	UNICORN Monitor
MC6801U4G1	MC6801U4	UNICORN Monitor

*Mini-monitor has only two commands: execute and memory examine/charge.

MPUs/EXPANDABLE MCUs SUPPORTED BY ALL M6800-FAMILY PERIPHERALS

MC6800	MC6801	MC6803U4
MC6802	MC6801U4	MC68120
MC6808	MC68701	MC68121
MC6809	MC68701U4	MC146805E2
MC6809E	MC6803	
	MC6803E	

MOTOROLA *Semiconductor Products Inc.*

© IC MASTER 1984

THE M68000 FAMILY — AN INVESTMENT IN THE FUTURE

The family concept has been extremely popular in the Microprocessor industry. Motorola pioneered this family concept with the introduction of the M6800 Family in 1974. Led by the MC68000 Microprocessing Unit (MPU) in 1979 and followed by a host of peripherals, the M68000 Family offers the engineer a set of building blocks to construct cost-effective solutions to an ever-widening range of complex 16/32 bit applications. The tremendous popularity of the M68000 Family is not without warrant. HMOS technology, performance, and support are but a few of the many reasons why the M68000 Family continues to be the 16 bit industry leader.

It should be noted that the M68000 Family is a not-so-distant relative of the MC6800. All M6800 Family peripherals interface directly with the MC68000, so upward compatibility is built-in. Where low cost and medium performance are required, they present a very attractive alternative. The plan for the M68000 Family is a simple one. Provide the marketplace with the best 16-bit family and back it up with support that is second to none. And it's happening now.

What about expandability? The M68000 Family is designed with this in mind. All the way from an internally microcoded 32-bit architecture to the third-generation EXORmacs development system. Efficient high level language support provided by Pascal allows upward compatibility of software from 8-bit to 16-bit to 32-bit machines.

The majority of today's 16-bit microprocessor applications are quite complex, with long design times. Clearly, the required investment in design resources requires finished products to have increased longevity. Motorola understands this, and is committed to offering a family which will allow these products to remain state-of-the-art for years to come. Thus, the M68000 Family is an investment in the future.

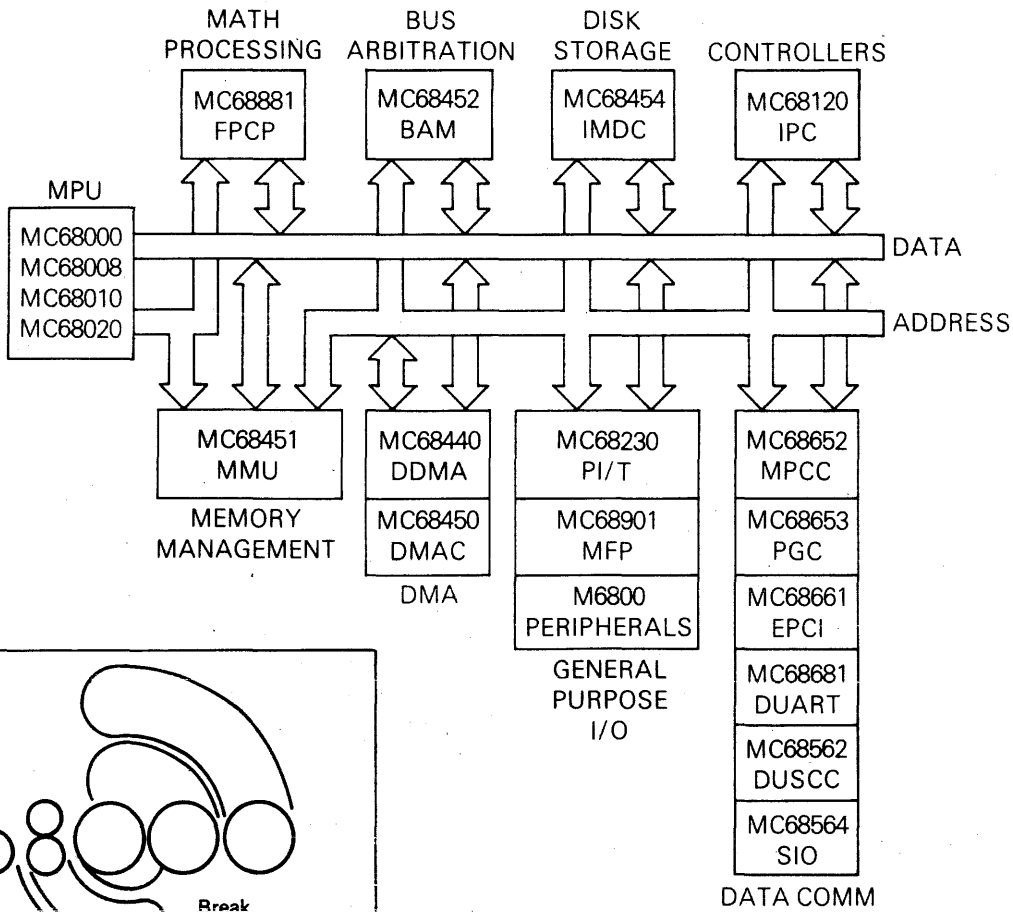

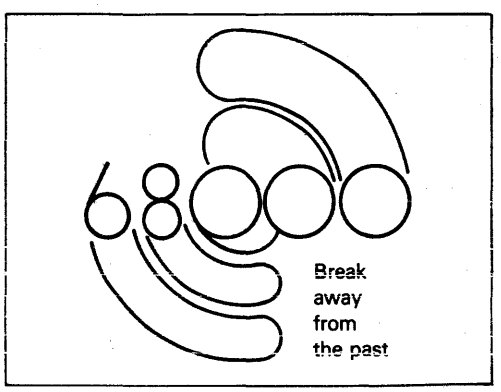

EXORmacs is a trademark of Motorola Inc.

© IC MASTER 1984

16-BIT MICROPROCESSING UNIT

MC68000L6 (6 MHz)

MC68000L8 (8 MHz)

MC68000L10 (10 MHz)

MC68000L12 (12.5 MHz)

Advances in semiconductor technology have provided the capability to place on a single silicon chip a microprocessor at least an order of magnitude higher in performance and circuit complexity than has been previously available. The MC68000 is the first of a family of such VLSI microprocessors from Motorola. It combines state-of-the-art technology and advanced circuit design techniques with computer sciences to achieve an architecturally advanced 16-bit microprocessor.

The resources available to the MC68000 user consist of the following:

- 32-Bit Data and Address Registers
- 16 Megabyte Direct Addressing Range
- 56 Powerful Instruction Types
- Operations on Five Main Data Types
- Memory Mapped I/O
- 14 Addressing Modes

As shown in the programming model, the MC68000 offers seventeen 32-bit registers in addition to the 32-bit program counter and a 16-bit status register. The first eight registers (D0-D7) are used as data registers for byte (8-bit), word (16-bit), and long word (32-bit) data operations. The second set of seven registers (A0-A6) and the system stack pointer may be used as software stack pointers and base address registers. In addition, these registers may be used for word and long word address operations. All seventeen registers may be used as index registers.

PROGRAMMING MODEL

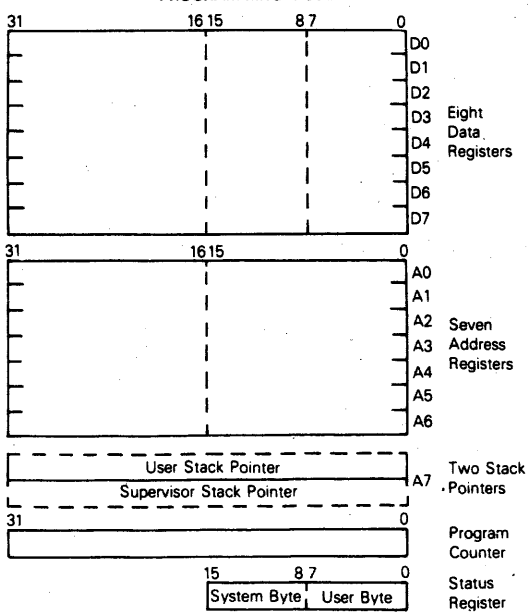

PIN ASSIGNMENT

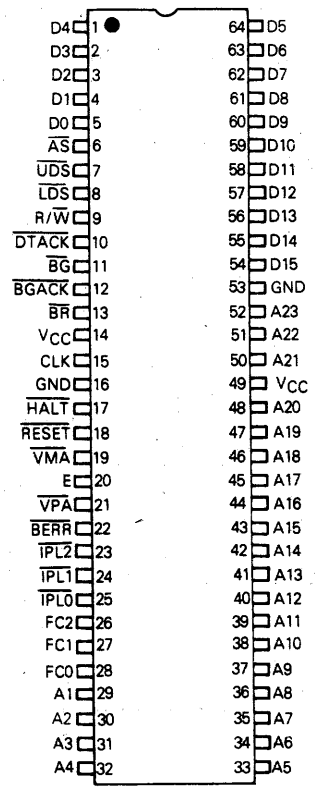

© IC MASTER 1984

REDUCED DATA BUS MC68000
MC68008

Mainframe architecture is now available for 8-bit systems. The new MC68008 member of the M68000 Family allows the design of cost effective systems using 8-bit data buses while providing the benefits of a 32-bit microprocessor architecture. The performance of the MC68008 is greater than any 8-bit microprocessor and superior to several 16-bit microprocessors.

The MC68008 is completely code compatible with the MC68000. This means that programs developed for the MC68000 will run on the MC68008 and vice versa. This applies equally to either source code or object code.

A system implementation based on an 8-bit data bus reduces system cost in comparison to 16-bit systems due to a more effective use of components. Byte-wide memories and peripherals can be used much more effectively. In addition, the non-multiplexed address and data buses eliminate the need for external demultiplexers, thus further simplifying the system.

The general purpose architecture of the MC68008 can easily satisfy market requirements for many diverse applications. The MC68008 provides the user with seventeen 32-bit registers, 56 basic instruction types, allows an efficient hardware system implementation, extensive exception processing capabilities and a 1 megabyte linear address space.

VIRTUAL MEMORY PROCESSOR
MC68010

The MC68010 is an MC68000 with enhancements that make it an ideal processor for virtual memory and virtual machine systems. Many of these changes concern the operation of the processor when a faulty bus cycle takes place.

The most significant MC68010 enhancement is the facility for complete, controlled storing of the internal processor state upon receipt of a bus error signal. This state can later be recovered by the processor for continuation after the faulty condition has been corrected. Additionally, the MC68010 may be used as a virtual processor with one governing operating system handling the supervisory chores of any number of subordinate operating systems. This also allows virtual input/output to be supported. A third major change is the allowance for a delayed bus error signal to abort a bus cycle. This bus relaxation allows error detection and correction (EDAC) to be performed with the MC68010 without impacting the execution time of instructions when no error occurs.

ENHANCED M68000 MICROPROCESSOR
MC68020

The MC68020 is another in a series of M68000 high performance 16/32-bit microprocessors from Motorola. Motorola's original MC68000 is the basis for this processor. This processor retains software compatibility with the MC68008, MC68000, and the MC68010.

The MC68020 is the first true 32-bit microprocessor. The power of the MC68020 allows its use in any application; even those previously limited to mainframes. Just as the MC68000 set the industry standard for 16-bit microprocessor performance, the MC68020 will be the standard for all 32-bit systems.

Motorola did not stop at merely rounding out the 32-bit architecture, but added instruction set enhancements, coprocessor operations, improved operating system support, cache for performance advantages, and innovative techniques to improve bus efficiency.

The MC68020 is designed to accommodate M68000 co-processors through a special co-processor interface and using new co-processor commands. Use of co-processors extends the capability of an M68000 system beyond the limits of a single processing element to numerous tightly-coupled processing units, each of which may be tailored to a particular data type, task, instruction set, etc. To further enhance special operations in an M68000 system, an instruction cache is included in the MC68020. This cache will allow repeated instruction streams to execute significantly faster while freeing the external bus for other processors.

© IC MASTER 1984

FLOATING-POINT CO-PROCESSOR
MC68881

The MC68881 is a high-performance HMOS floating-point processor designed to interface with the advanced MC68020 microprocessor. It can also be used as a peripheral in systems with other processors. The MC68881 is a comprehensive floating-point co-processor that provides a wide range of floating point capabilities seldom found even in a large main-frame computer. System performance with the MC68020 is the overriding design goal of the MC68881.

INTELLIGENT PERIPHERAL CONTROLLER
MC68120, MC68121

The MC68120/MC68121 Intelligent Peripheral Controller (IPC) is a general purpose, mask programmable peripheral controller. The IPC provides the interface between an M68000 or M6800 Family microprocessor and the final peripheral devices through a system bus and control lines. System bus data is transferred to and from the IPC via dual-port RAM while the software utilizes the semaphore registers to control RAM tasking or any other shared resource. Multiple operating modes range from a single chip mode with 21 I/O lines and 2 control lines to an expanded mode supporting an address space of 64K bytes. The MC68120 has 2K bytes of on-chip ROM to make full use of all operating modes. The MC68121 utilizes only the expanded address modes, due to the absence of on-chip ROM.

A serial communications interface, 16-bit timer, dual-ported RAM and semaphore registers are available for use by the IPC in all operating modes.

- Upward Compatible with MC6800 Source and Object Code
- 2048 Bytes of ROM (MC68120 Only)
- 128 Bytes of Dual-Ported RAM
- Multiple Operation Modes Ranging from Single Chip to Expanded, with 64K Byte Address Space
- Six Shared Semaphore Registers
- 21 Parallel I/O Lines and 2 Handshake Lines (5 I/O Lines on MC68121)
- Serial Communications Interface (SCI)
- 16-Bit Three-Function Timer
- 8-Bit CPU and Internal Bus
- Halt/Bus Available Capability Control
- 8×8 Multiply Instruction
- TTL Compatible Inputs and Outputs
- External and Internal Interrupts

PARALLEL INTERFACE/TIMER
MC68230

The MC68230 Parallel Interface/Timer provides versatile double buffered parallel interfaces and an operating system oriented timer to MC68000 systems. The parallel interfaces operate in unidirectional or bidirectional modes, either 8 or 16 bits wide. In the unidirectional modes, an associated data direction register determines whether the port pins are inputs or outputs. In the bidirectional modes the data direction regsiters are ignored and the direction is determined dynamically by the state of four handshake pins. These programmable handshake pins provide an interface flexible enough for connection to a wide variety of low, medium, or high speed peripherals or other computer systems. The PI/T ports allow use of vectored or autovectored interrupts, and also provide a DMA Request pin for connection to the MC68450 Direct Memory Access Controller or a similar circuit. The PIT timer contains a 24-bit wide counter and a 5-bit prescaler. The timer may be clocked by the system clock (PI/T CLK pin) or by an external clock (TIN pin), and a 5-bit prescaler can be used. It can generate periodic interrupts, a square wave, or a single interrupt after a programmed time period. Also it can be used for elapsed time measurement or as a device watchdog.

- 8 MHz Version: MC68230L8
- 10 MHz Version: MC68230L10
- Unidirectional 8-Bit and 16-Bit Mode
- Bidirectional 8-Bit and 16-Bit Mode
- Selectable Handshaking Options
- 24-Bit Programmable Timer
- Software Programmable Timer Modes
- Contains Interrupt Vector Generation Logic
- Separate Port and Timer Interrupt Service Requests
- Registers are Read/Write and Directly Addressable
- Registers are Addressed for MOVEP (Move Peripheral) and DMAC Compatibility

© IC MASTER 1984

DUAL DIRECT MEMORY ACCESS CONTROLLER
MC68440

DIRECT MEMORY ACCESS CONTROLLER
MC68450

The MC68440 and MC68450 are designed to complement the performance and architectural capabilities of M68000 Family microprocessors by moving blocks of data in quick, efficient manner with minimum intervention by the host processor. The DMA/DDMA performs memory-to-memory and peripheral-to-memory data transfers by utilizing the following features:

- Bus Compatible with the MC68000, MC68008, and MC68010
- Compatible with M68000 Peripherals
- On-Chip Registers allow Complete Software Control by the System MPU
- Auto Request or External Request
- Memory-to-Memory, Memory-to-Device, and Device-to-Memory Transfers
- Programmable Channel Prioritization
- Vectored Interrupt Capabilities with Two Vectors per Channel
- Two Independent Channels — MC68440
- Four Independent Channels — MC68450
- MC68440 a Subset of MC68450 — Pin for Pin Compatible with the MC68450

MEMORY MANAGEMENT UNIT
MC68451

The MC68451 Memory Management Unit (MMU) provides address translation and protection for the 16 megabyte addressing range of the MC68000 MPU. Each bus master (or processor) in the M68000 Family provides function code and an address during each bus cycle. The function code specifies an address space and the address specifies a location within that address space. The function codes distinguish between User, Supervisor spaces and, within these, between Data, Program spaces. This separation of address spaces is the basis for memory management and protection by the operating system. Provision is also made for other bus masters, such as the MC68450 DMAC, to have separate address spaces for efficient DMA. A multitasking operating system is simplified and reliability is enhanced through the use of the MMU.

NEW TRANSLATION TIMES 125 ns at 8 MHz

- MC68000 Bus Compatible
- Provides Efficient Memory Allocation
- Separates Address Space of System and User Resources
- Provides Write Protection
- Supports Paging and Segmentation
- 32 Segments of Variable Size with Each MMU
- Multiple MMU Capability to Expand to Any Number of Segments
- Allows Inter-Task Communication through Shared Segments
- Quick Context Switching to Cut Operating System Overhead
- Simplifies Programming Model of Address Space
- Increases System Reliability
- DMA Compatible
- 6-MHz Version: MC68451L6
- 8-MHz Version: MC68451L8
- 10-MHz Version: MC68451L10

SINGLE-MMU SYSTEM BLOCK DIAGRAM

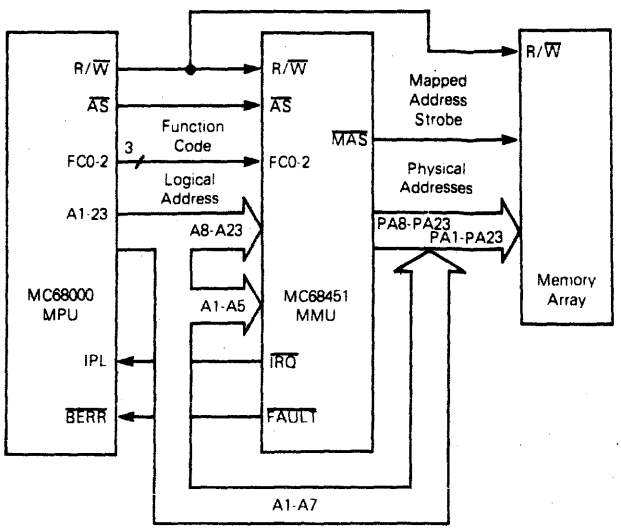

MOTOROLA Semiconductor Products Inc.

© IC MASTER 1984

FLOATING-POINT CO-PROCESSOR
MC68881

The MC68881 is a high-performance HMOS floating-point processor designed to interface with the advanced MC68020 microprocessor. It can also be used as a peripheral in systems with other processors. The MC68881 is a comprehensive floating-point co-processor that provides a wide range of floating point capabilities seldom found even in a large main-frame computer. System performance with the MC68020 is the overriding design goal of the MC68881.

INTELLIGENT PERIPHERAL CONTROLLER
MC68120, MC68121

The MC68120/MC68121 Intelligent Peripheral Controller (IPC) is a general purpose, mask programmable peripheral controller. The IPC provides the interface between an M68000 or M6800 Family microprocessor and the final peripheral devices through a system bus and control lines. System bus data is transferred to and from the IPC via dual-port RAM while the software utilizes the semaphore registers to control RAM tasking or any other shared resource. Multiple operating modes range from a single chip mode with 21 I/O lines and 2 control lines to an expanded mode supporting an address space of 64K bytes. The MC68120 has 2K bytes of on-chip ROM to make full use of all operating modes. The MC68121 utilizes only the expanded address modes, due to the absence of on-chip ROM.

A serial communications interface, 16-bit timer, dual-ported RAM and semaphore registers are available for use by the IPC in all operating modes.

- Upward Compatible with MC6800 Source and Object Code
- 2048 Bytes of ROM (MC68120 Only)
- 128 Bytes of Dual-Ported RAM
- Multiple Operation Modes Ranging from Single Chip to Expanded, with 64K Byte Address Space
- Six Shared Semaphore Registers
- 21 Parallel I/O Lines and 2 Handshake Lines (5 I/O Lines on MC68121)
- Serial Communications Interface (SCI)
- 16-Bit Three-Function Timer
- 8-Bit CPU and Internal Bus
- Halt/Bus Available Capability Control
- 8 × 8 Multiply Instruction
- TTL Compatible Inputs and Outputs
- External and Internal Interrupts

PARALLEL INTERFACE/TIMER
MC68230

The MC68230 Parallel Interface/Timer provides versatile double buffered parallel interfaces and an operating system oriented timer to MC68000 systems. The parallel interfaces operate in unidirectional or bidirectional modes, either 8 or 16 bits wide. In the unidirectional modes, an associated data direction register determines whether the port pins are inputs or outputs. In the bidirectional modes the data direction regsiters are ignored and the direction is determined dynamically by the state of four handshake pins. These programmable handshake pins provide an interface flexible enough for connection to a wide variety of low, medium, or high speed peripherals or other computer systems. The PI/T ports allow use of vectored or autovectored interrupts, and also provide a DMA Request pin for connection to the MC68450 Direct Memory Access Controller or a similar circuit. The PIT timer contains a 24-bit wide counter and a 5-bit prescaler. The timer may be clocked by the system clock (PI/T CLK pin) or by an external clock (TIN pin), and a 5-bit prescaler can be used. It can generate periodic interrupts, a square wave, or a single interrupt after a programmed time period. Also it can be used for elapsed time measurement or as a device watchdog.

- 8 MHz Version: MC68230L8
- 10 MHz Version: MC68230L10
- Unidirectional 8-Bit and 16-Bit Mode
- Bidirectional 8-Bit and 16-Bit Mode
- Selectable Handshaking Options
- 24-Bit Programmable Timer
- Software Programmable Timer Modes
- Contains Interrupt Vector Generation Logic
- Separate Port and Timer Interrupt Service Requests
- Registers are Read/Write and Directly Addressable
- Registers are Addressed for MOVEP (Move Peripheral) and DMAC Compatibility

© IC MASTER 1984

DUAL DIRECT MEMORY ACCESS CONTROLLER
MC68440

DIRECT MEMORY ACCESS CONTROLLER
MC68450

The MC68440 and MC68450 are designed to complement the performance and architectural capabilities of M68000 Family microprocessors by moving blocks of data in quick, efficient manner with minimum intervention by the host processor. The DMA/DDMA performs memory-to-memory and peripheral-to-memory data transfers by utilizing the following features:

- Bus Compatible with the MC68000, MC68008, and MC68010
- Compatible with M68000 Peripherals
- On-Chip Registers allow Complete Software Control by the System MPU
- Auto Request or External Request
- Memory-to-Memory, Memory-to-Device, and Device-to-Memory Transfers
- Programmable Channel Prioritization
- Vectored Interrupt Capabilities with Two Vectors per Channel
- Two Independent Channels — MC68440
- Four Independent Channels — MC68450
- MC68440 a Subset of MC68450 — Pin for Pin Compatible with the MC68450

MEMORY MANAGEMENT UNIT
MC68451

The MC68451 Memory Management Unit (MMU) provides address translation and protection for the 16 megabyte addressing range of the MC68000 MPU. Each bus master (or processor) in the M68000 Family provides function code and an address during each bus cycle. The function code specifies an address space and the address specifies a location within that address space. The function codes distinguish between User, Supervisor spaces and, within these, between Data, Program spaces. This separation of address spaces is the basis for memory management and protection by the operating system. Provision is also made for other bus masters, such as the MC68450 DMAC, to have separate address spaces for efficient DMA. A multitasking operating system is simplified and reliability is enhanced through the use of the MMU.

- MC68000 Bus Compatible
- Provides Efficient Memory Allocation
- Separates Address Space of System and User Resources
- Provides Write Protection
- Supports Paging and Segmentation
- 32 Segments of Variable Size with Each MMU
- Multiple MMU Capability to Expand to Any Number of Segments
- Allows Inter-Task Communication through Shared Segments
- Quick Context Switching to Cut Operating System Overhead
- Simplifies Programming Model of Address Space
- Increases System Reliability
- DMA Compatible
- 6-MHz Version: MC68451L6
- 8-MHz Version: MC68451L8
- 10-MHz Version: MC68451L10

NEW TRANSLATION TIMES 125 ns at 8 MHz

SINGLE-MMU SYSTEM BLOCK DIAGRAM

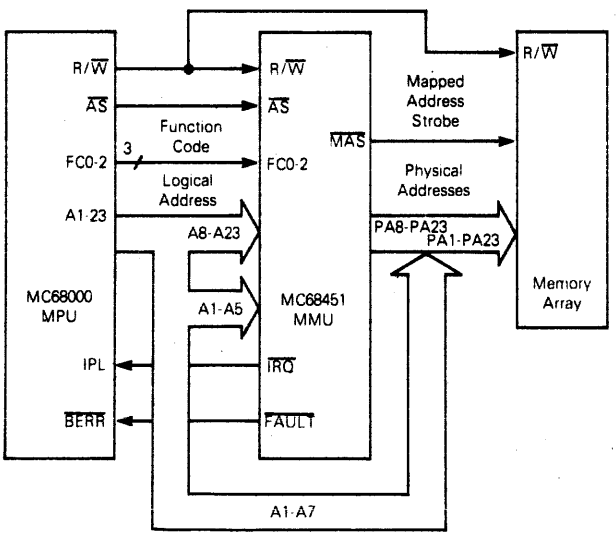

© IC MASTER 1984

BUS ARBITRATION MODULE
MC68452

The MC68452 bus arbitration module (BAM) is an asynchronous bus controller that allows multiple local buses to be multiplexed onto a common global bus enabling the local buses to share memory, I/O devices, and communicate with each other easily. A single BAM provides arbitration for up to eight local buses and can be expanded indefinitely to support more local buses.

DUAL UNIVERSAL SERIAL COMMUNICATIONS CONTROLLER
MC68562

The MC68562 Dual Universal Serial Communications Controller (DUSCC) is a single-chip MOS-LSI communications device that provides two independent, multiprotocol, full duplex receiver, transmitter channels in a single package. The DUSCC supports bit-oriented and character-oriented (byte count and byte control) synchronous data link controls as well as asynchronous protocols. The logic for both channels provides formats, synchronization, and validation for data transferred to and from the channel interface.

SERIAL INPUT/OUTPUT
MC68564

The MC68564 is a dual-channel serial input/output communication peripheral. It satisfies a wide variety of serial data communication requirements as it handles asynchronous, byte synchronous (bisync), and synchronous bit-oriented protocols (HDLC and SDLC). In addition, it is capable of supporting virtually any serial protocol used in an application other than data communication, such as a floppy disk interface.

MULTI-PROTOCOL COMMUNICATIONS CONTROLLER
MC68652/MC2652

The MC68652/MC2652 MPCC formats, transmits, and receives synchronous serial data while supporting Bit-Oriented (BOP) or Byte-Control (BCP) protocols. The parallel bus of the MPCC readily interfaces with M6800 and M68000 Microprocessor Families as well as many other 8- or 16-bit processors. Typical applications include intelligent terminals, front-end communications, remote-data concentrators, communication test equipment, and computer-to-computer links.

- DC to 2 Mbps Data Rate
- Bit-Oriented Protocols (BOP): SDLC, ADCCP, HDLC, X.25
  - Character Length — 1 to 8 Bits
  - Automatic Detection and Generation of Special Control Characters, i.e., FLAG, ABORT, GA
  - Automatic Zero Insertion and Deletion
  - Idle Transmission of FLAG or ABORT Characters
  - Automatic Generation and Checking of CRC-CCITT FCS
- Byte-Control Protocols (BCP): DDCMP, BISYNC External CRC)
  - Character Length — 5 to 8 Bits
  - SYNC Generation Detection and Stripping
  - Idle Transmission of SYNC or MARK Characters
  - Automatic Generation and Checking of CRC-16 or VRC
- Maintenance Mode for Self-Checking

© IC MASTER 1984

POLYNOMIAL GENERATOR CHECKER
MC68653/MC2653

The MC68653/MC2653 Polynomial Generator Checker (PGC) is a polynomial generator checker/character comparator circuit that complements a receiver/transmitter (R/T or USART/USRT/UART) in the support of character oriented data-link controls.

Parallel data characters transferred between the MPU and R/T are monitored by the PGC which performs block check character (BCC) and parity (VRC) generation/checking, single character detection, and two character sequence detection. Since the PGC operates on parallel characters, the data transmission format may be serial (synchronous or asynchronous) or parallel.

- Parallel Block Check Character Accumulation/Checking: CRC-16, CRC-12, LRC-8
- BISYNC Normal and Transparent Modes
- Automatic- or Single-Character Accumulation Modes
- Two Character Sequence Detection; Examples: DLE-STX, ACK 0, ACK 1, WACK, RVI, DISC, WBT
- 6-, 7-, or 8-Bit Characters
- VRC Generation/Checking on Data Bus
- Four Maskable Interrupt Conditions
- Maximum Character Accumulation Rate of 500 kHz (4 Mbps)
- No System Clock Required

ENHANCED PROGRAMMABLE COMMUNICATIONS INTERFACE
MC68661/MC2661

The MC2661/MC68661, Enhanced Programmable Communications Interface (EPCI), is a universal synchronous/asynchronous data communications controller chip that is an enhanced version of the Signetics 2651. The EPCI directly interfaces to most 8-bit MPUs and easily to the MC68000 MPU and other 16-bit MPUs. It may be used in either a polled or interrupt driven system. Programmed instructions can be accepted from the host MPU while supporting many synchronous or asynchronous serial-data communication protocols in a full or half-duplex mode. Special support for BISYNC is provided.

The EPCI converts parallel data characters, accepted from the microprocessor data bus, into transmit-serial data. Simultaneously, the EPCI can convert receive-serial data to parallel data characters for input to the microprocessor.

A baud rate generator in the EPCI can be programmed to either accept an external clock, or to generate internal transmit or receive clocks. Sixteen different baud rates can be selected under program control when operating in the internal clock mode. Each version of the EPCI (A, B, C) has a different set of baud rates.

- 3 Baud Rate Sets (A, B, C); 16 Internal Rates for Each Set
- 5- to 8-Bit Characters Plus Parity; Odd, Even, or No Parity
- Double Buffered Transmitter and Receiver
- Dynamic Character Length Switching
- Local or Remote Maintenance Loop-Back Mode
- RxC and TxC Pins and Short Circuit Protected

DUAL ASYNCHRONOUS RECEIVER/TRANSMITTER (DUART)
MC68681

The MC68681 Dual Universal Asynchronous Receiver/Transmitter (DUART) is a single-chip MOS-LSI communications device that provides two independent full-duplex asynchronous receiver/transmitter channels in a single package. It is compatible with other M68000 Family devices, and can also interface easily with other microprocessors. The DUART can be used in polled or interrupt driven systems.

- Quadruple Buffered Receiver Data Registers
- Programmable Data Format
  - 5 to 8 Data Bits Plus Parity
  - Odd, Even, No Parity, or Force Parity
  - 1, 1.5, or 2 Stop Bits Programmable in 1/16 Bit Increments
- Programmable Baud Rate for Each Receiver and Transmitter

MULTI-FUNCTION PERIPHERAL
MC68901

The MC68901 multi-function peripheral (MFP) is a combination of many of the necessary peripheral functions in a microprocessor system. Included are: four timers, interrupt controller for 16 sources, eight parallel I/O lines, and a single-channel USART. The use of the MFP in a system can significantly reduce chip count, thereby reducing system cost. The MFP is completely MC68000 bus compatible with 24 directly addressable internal registers that provide the necessary control and status interface to the programmer.

© IC MASTER 1984

NS16000
Elegance is everything.

NS16000 FAMILY

CPUs

- 08032 8/32-BIT CPU *
- 16032 16/32-BIT CPU *
- 16C032 CMOS 16032
- 32032 32-BIT CPU *
- 32032A 32-BIT CPU
- 32C032B 32-BIT CMOS CPU
- 32C032C 32-BIT CMOS CPU
- 32C132 NEXT GENERATION CPU

SLAVE PROCESSORS

- 16081 FLOATING POINT UNIT *
- 16082 MEMORY MANAGEMENT UNIT *
- CUSTOM UNIT

* Available as of January 1984.

National Semiconductor
MICROCOMPUTER SYSTEMS DIVISION

© IC MASTER 1984

NS16000
Elegance is everything.

NS16000 PERIPHERALS

16201 TIMING CONTROL UNIT *	16456 MULTIPLE PROTOCOL COMMUNICATIONS CONTROLLER	DP8350 CRT CONTROLLER
16202 INTERRUPT CONTROLLER *	16488 GPIB CONTROLLER	DP8392 LAN COAX TRANSCEIVER INTERFACE
16203 DMA CONTROLLER *	16455 TERMINAL MANAGEMENT PROCESSOR *	DP8400 ERROR CORRECTION *
16204 BUS ARBITER	8250 A UART *	DP8408/09 RAM CONTROLLER
16413 CRT CONTROLLER	GRAPHICS	DP8460 HARD DISK DATA SEPARATOR
16425 PACKET SWITCHING FRAME LEVEL CONTROLLER	16450 UART *	DP8464 HARD DISK PULSE DETECTOR

* Available as of January 1984.

National Semiconductor
MICROCOMPUTER SYSTEMS DIVISION

© IC MASTER 1984

NS16000
Elegance is everything.

SYS16™

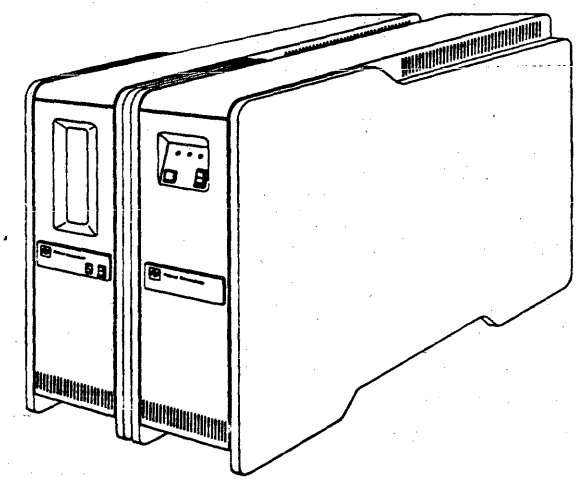

NS16000
Native Development System

GENIX™ Operating System
(Enhanced Berkeley 4.1 bsd UNIX™)

C And Pascal Compilers

Multi-user (8-Port System)

Up To 3.25 Mbyte RAM

20 Mbyte Winchester Disk

SYS 16™ and GENIX™ are trademarks of National Semiconductor Corp.
UNIX™ is a trademark of Bell Labs.

National Semiconductor
MICROCOMPUTER SYSTEMS DIVISION

© IC MASTER 1984

National Semiconductor

July 1983

NSC800™ High-Performance Low-Power Microprocessor

General Description

The NSC800 is an 8-bit microprocessor that functions as the central processing unit (CPU) in National Semiconductor's NSC800 microcomputer family. The device is fabricated using National's P²CMOS™ technology. This technology provides the system designer with devices equaling the performance levels of comparable NMOS products, combined with the low-power advantages of CMOS. Many system functions are incorporated on the device, such as: vectored priority interrupts, refresh control, power-save feature and interrupt acknowledge. The NSC800 is housed in dual-in-line and chip carrier packages.

Dedicated peripherals (NSC810 RAM I/O Timer, NSC831 I/O and NSC858 UART) have on-chip logic for direct interface to the NSC800. In addition, National also offers a full line of CMOS components to allow a full low-power solution to system designs.

For military applications, the NSC800 is available with class B screening in accordance with Method 5004 of MIL-STD-883.

Features

- Variable power supply 2.4V – 6.0V
- Fully compatible with Z80 instruction set
- Powerful set of 158 instructions
- 10 addressing modes
- 22 internal registers
- Low power: 50 mW at 5V V_{CC}
- Multiplexed bus structure
- On-chip bus controller and clock generator
- On-chip 8-bit dynamic RAM refresh circuitry
- Speed: 1.0 μs instruction cycle at 4.0 MHz
  - NSC800-4 4.0 MHz
  - NSC800 2.5 MHz
  - NSC800-1 1.0 MHz
- Capable of addressing 64k bytes of memory and 256 I/O devices
- Five interrupt request lines on-chip
- Schmitt trigger input on reset
- Unique standby-current (power-save) feature

CPU Functional Block Diagram

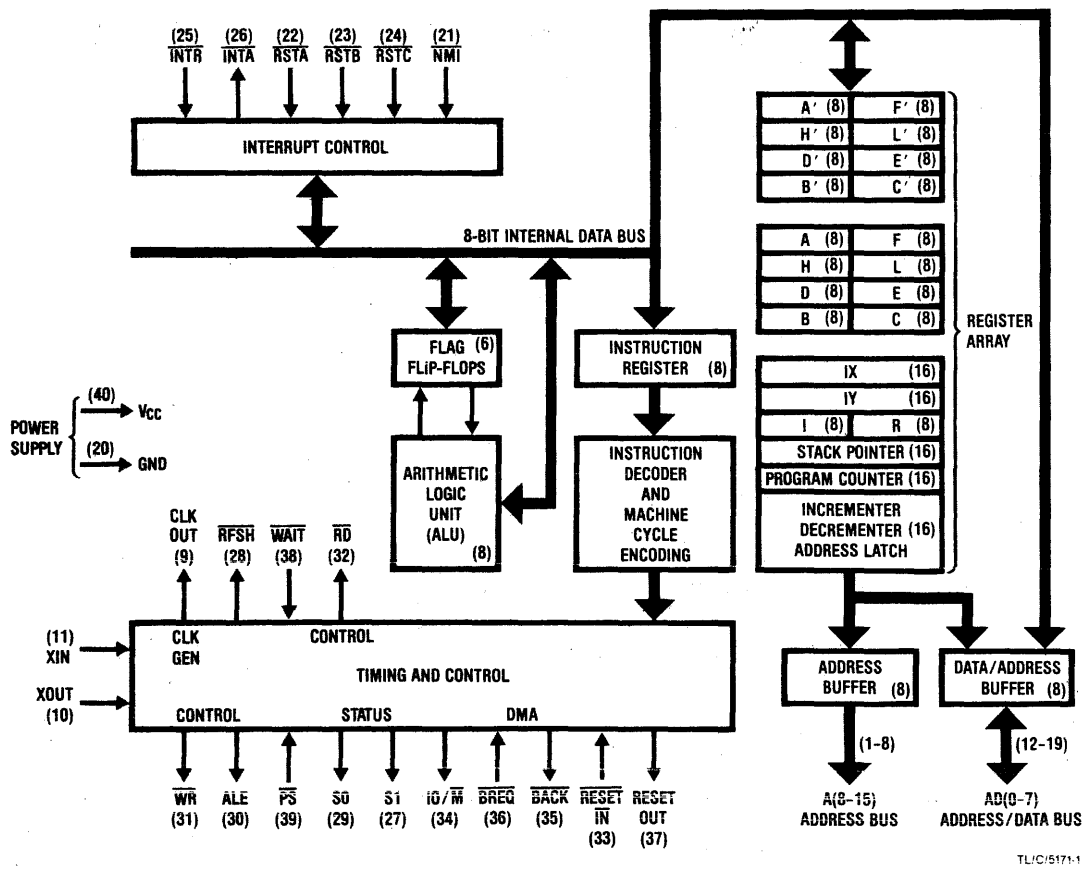

NSC800™ and P²CMOS™ are trademarks of National Semiconductor Corp.
TRI-STATE® is a registered trademark of National Semiconductor Corp.
Z80® is a registered trademark of Zilog Corp.

© 1983 National Semiconductor Corp. TL/C/5171

IM-B30M73/Printed in U.S.A.

© IC MASTER 1984

Absolute Maximum Ratings (Note 1)

Storage Temperature	−65°C to +150°C
Voltage on Any Pin with Respect to Ground	−0.3V to V_{CC} + 0.3V
Maximum V_{CC}	7V
Power Dissipation	1W
Lead Temperature (Soldering, 10 seconds)	300°C

Operating Conditions V_{CC} = 5V ± 10%

Ambient Temperature	
Military	−55°C to +125°C
Industrial	−40°C to +85°C
Commercial	0°C to +70°C

DC Electrical Characteristics T_A = −55°C to +125°C, V_{CC} = 5V ± 10%, GND = 0V, unless otherwise specified.

Symbol	Parameter	Conditions	Min	Typ	Max	Units
V_{IH}	Logical 1 Input Voltage		0.7 V_{CC}		V_{CC}	V
V_{IL}	Logical 0 Input Voltage		0		0.2 V_{CC}	V
V_{HY}	Hysteresis at RESET IN input	V_{CC} = 5V	0.25	0.5		V
V_{OH1}	Logical 1 Output Voltage	I_{OUT} = −1.0 mA	2.4			V
V_{OH2}	Logical 1 Output Voltage	I_{OUT} = −10 μA	V_{CC} − 0.5			V
V_{OL1}	Logical 0 Output Voltage	I_{OL} = 2 mA	0		0.4	V
V_{OL2}	Logical 0 Output Voltage	I_{OUT} = 10 μA	0		0.1	V
I_{IL}	Input Leakage Current	$0 \le V_{IN} \le V_{CC}$	−10.0		10.0	μA
I_{OL}	Output Leakage Current	$0 \le V_{IN} \le V_{CC}$	−10.0		10.0	μA
I_{CCA}	Active Supply Current	I_{OUT} = 0, $f_{(XIN)}$ = 5 MHz		10	15	mA
I_{CCA}	Active Supply Current	I_{OUT} = 0, $f_{(XIN)}$ = 8 MHz		15	21	mA
I_{CCQ}	Quiescent Current	$f_{(XIN)}$ = 0 MHz		2	4	mA
I_{CPS}	Power-Save Current	$f_{(XIN)}$ = 5.0 MHz		5		mA
C_{IN}	Input Capacitance			6	10	pF
C_{OUT}	Output Capacitance			8	12	pF
V_{CC}	Power Supply Voltage	Note 2	2.4	5	6	V

Note 1: Absolute Maximum Ratings indicate limits beyond which permanent damage may occur. Continuous operation at these limits is not intended and should be limited to those conditions specified under DC Electrical Characteristics.

Note 2: CPU operation at lower voltages will reduce the maximum operating speed. DC and AC electrical characteristics at voltages other than 5V ± 10% are forthcoming.

Preliminary (not tested)

Max CPU Speed*	NSC800-1	NSC800	NSC800-4	Units
@2.4V		500	500	kHz
@3.0V		1	1	MHz

*Speed of CPU is expressed in clock speed, not crystal speed.

I_{CC} vs System Speed

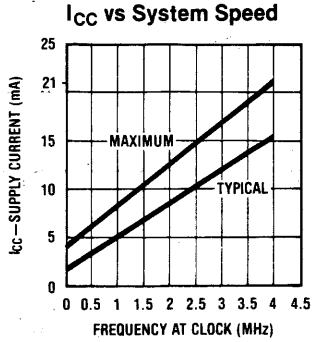

TL/C/5171-2

Connection Diagram

Dual-In-Line Package

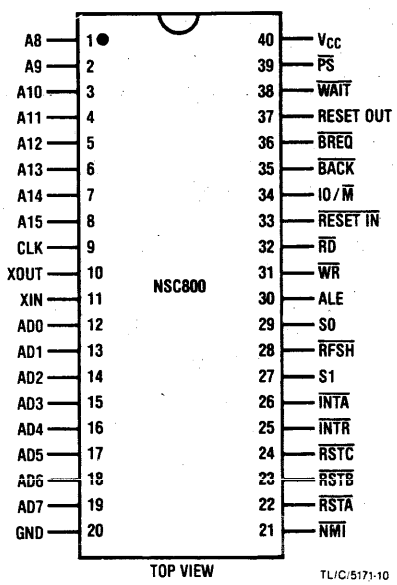

TL/C/5171-10

National Semiconductor

AC Electrical Characteristics $V_{CC} = 5V \pm 10\%$, GND = 0V

NSC800-1 → $T_A = 0°C$ to 70°C
$T_A = -40°C$ to $+85°C$
NSC800 → $T_A = 0°C$ to 70°C
$T_A = -40°C$ to $+85°C$
$T_A = -55°C$ to $+125°C$
NSC800-4 → $T_A = 0°C$ to 70°C
$T_A = -40°C$ to $+85°C$

Symbol	Parameter	NSC800-1		NSC800		NSC800-4		Units	Notes
		Min	Max	Min	Max	Min	Max		
t_X	Period at XIN and XOUT Pins	500	31250	200	31250	125	31250	ns	
T	Period at Clock Output ($=2\,t_X$)	1000	62500	400	62500	250	62500	ns	
t_R	Clock Rise Time		110		110		75	ns	Measured from 10%-90% of signal
t_F	Clock Fall Time		60		60		40	ns	Measured from 10%-90% of signal
t_L	Clock Low Time	490		190		95		ns	50% duty cycle, square wave input on XIN
t_H	Clock High Time	450		150		80		ns	50% duty cycle, square wave input on XIN
$t_{ACC\,(RD)}$	ALE to Valid Data		1375		500		300	ns	Add t for each $\overline{WAIT}$ STATE Add t/2 for memory read cycles
t_{AFR}	AD(0-7) Float after $\overline{RD}$ Falling		0		0		0	ns	
t_{BABE}	$\overline{BACK}$ Rising to Bus Enable		1000		400		250	ns	
t_{BABF}	$\overline{BACK}$ Falling to Bus Float		50		50		50	ns	
t_{BACL}	$\overline{BACK}$ Falling to CLK Falling	425		125		55		ns	
t_{BRH}	$\overline{BREQ}$ Hold Time	0		0		0		ns	
t_{BRS}	$\overline{BREQ}$ Set-Up Time	100		50		35		ns	
t_{CAF}	Clock Falling to ALE Falling	0	30	0	30	0	35	ns	
t_{CAR}	Clock Rising to ALE Rising	0	100	0	100	0	75	ns	
t_{DAI}	ALE Falling to $\overline{INTA}$ Falling	530		230		100		ns	
t_{DAR}	ALE Falling to $\overline{RD}$ Falling	525	575	225	250	125	160	ns	
t_{DAW}	ALE Falling to $\overline{WR}$ Falling	990	1010	390	410	220	250	ns	
$t_{D(BACK)1}$	ALE Falling to $\overline{BACK}$ Falling	2500		1000		600		ns	Add t for each $\overline{WAIT}$ state Add t for opcode fetch cycles
$t_{D(BACK)2}$	$\overline{BREQ}$ Rising to $\overline{BACK}$ Rising	500	1600	200	700	125	475	ns	
$t_{D(I)}$	ALE Falling to $\overline{INTR}$, $\overline{NMI}$, $\overline{RSTA\text{-}C}$, $\overline{PS}$, $\overline{BREQ}$, Inputs Valid		1375		475		250	ns	Add t for each $\overline{WAIT}$ state Add t for opcode fetch cycles
t_{DPA}	Rising $\overline{PS}$ to Falling ALE	500	1550	200	650	125	475	ns	See *Figure 12* also
$t_{D(RFSH)}$	Falling ALE to Falling $\overline{RFSH}$	1500		600		325		ns	Add t for each $\overline{WAIT}$ state
$t_{D(WAIT)}$	ALE Falling to $\overline{WAIT}$ Input Valid		550		250		125	ns	

© IC MASTER 1984

AC Electrical Characteristics (Continued) $V_{CC} = 5V \pm 10\%$, GND = 0V

NSC800-1 → $T_A = 0°C$ to 70°C
$T_A = -40°C$ to $+85°C$
NSC800 → $T_A = 0°C$ to 70°C
$T_A = -40°C$ to $+85°C$
$T_A = -55°C$ to $+125°C$
NSC800-4 → $T_A = 0°C$ to 70°C
$T_A = -40°C$ to $+85°C$

Symbol	Parameter	NSC800-1		NSC800		NSC800-4		Units	Notes
		Min	Max	Min	Max	Min	Max		
$t_{H(ADH)1}$	A(8-15) Hold Time During Opcode Fetch	0		0		0		ns	
$t_{H(ADH)2}$	A(8-15) Hold Time During Memory or IO, $\overline{RD}$ and $\overline{WR}$	400		100		60		ns	
$t_{H(ADL)}$	AD(0-7) Hold Time	400		100		50		ns	
$t_{H(WD)}$	Write Data Hold Time	400		100		75		ns	
t_{INH}	Interrupt Hold Time	0		0		0		ns	
t_{INS}	Interrupt Set-Up Time	100		50		35		ns	
t_{NMI}	Width of NMI Input	50		30		20		ns	
t_{RDH}	Data Hold after Read	0		0		0		ns	
t_{RFL}	$\overline{RFSH}$ Rising to ALE Rising		−100		−100		−70	ns	Negative number means ALE occurs first
$t_{RL(MR)}$	$\overline{RD}$ Rising to ALE Rising (Memory Read)	450		150		85		ns	
$t_{RL(OP)}$	$\overline{RD}$ Rising to ALE Rising (Opcode)		−75		−65		−55	ns	Negative number means ALE occurs first
$t_{S(AD)}$	AD(0-7) Set-Up Time	300		80		40		ns	
$t_{S(ALE)}$	A(8-15), SO, SI, IO/$\overline{M}$ Set-Up Time	350		100		50		ns	
$t_{S(WD)}$	Write Data Set-Up Time	385		85		50		ns	
$t_{W(ALE)}$	ALE Width	430		130		75		ns	
t_{WH}	$\overline{WAIT}$ Hold Time	0		0		0		ns	
$t_{W(I)}$	Width of $\overline{INTR}$, $\overline{RSTA\text{-}C}$, $\overline{PS}$, $\overline{BREQ}$	500		200		125		ns	
$t_{W(INTA)}$	$\overline{INTA}$ Strobe Width	1000		400		200		ns	Add two t states for first $\overline{INTA}$ of each interrupt response string Add t for each $\overline{WAIT}$ state
t_{WL}	$\overline{WR}$ Rising to ALE Rising	450		150		90		ns	
$t_{W(RD)}$	Read Strobe Width During Opcode Fetch	1000		400		225		ns	Add t for each $\overline{WAIT}$ State Add t/2 for Memory Read Cycles
$t_{W(RFSH)}$	Refresh Strobe Width	1925		725		400		ns	
t_{WS}	$\overline{WAIT}$ Set-Up Time	100		50		35		ns	
$t_{W(WAIT)}$	$\overline{WAIT}$ Input Width	550		250		175		ns	
$t_{W(WR)}$	Write Strobe Width	1000		400		220		ns	Add t for each $\overline{WAIT}$ state
t_{XCF}	XIN to Clock Falling	25	55	25	55	25	55	ns	
t_{XCR}	XIN to Clock Rising	45	75	45	75	45	75	ns	

Note 1: Test conditions: t = 1000 ns for NSC800-1, 400 ns for NSC800, 250 ns for NSC800-4.

Note 2: Output timings are measured with a purely capacitive load of 150 pF. The following correction factor can be used for other loads:
150 pF < $C_L \leq$ 300 pF: +0.25 ns/pF
50 pF ≤ C_L < 150 pF: −0.15 ns/pF.

Note 3: To calculate timing specifications at other values of t use Table I.

National Semiconductor

Opcode Fetch Cycle

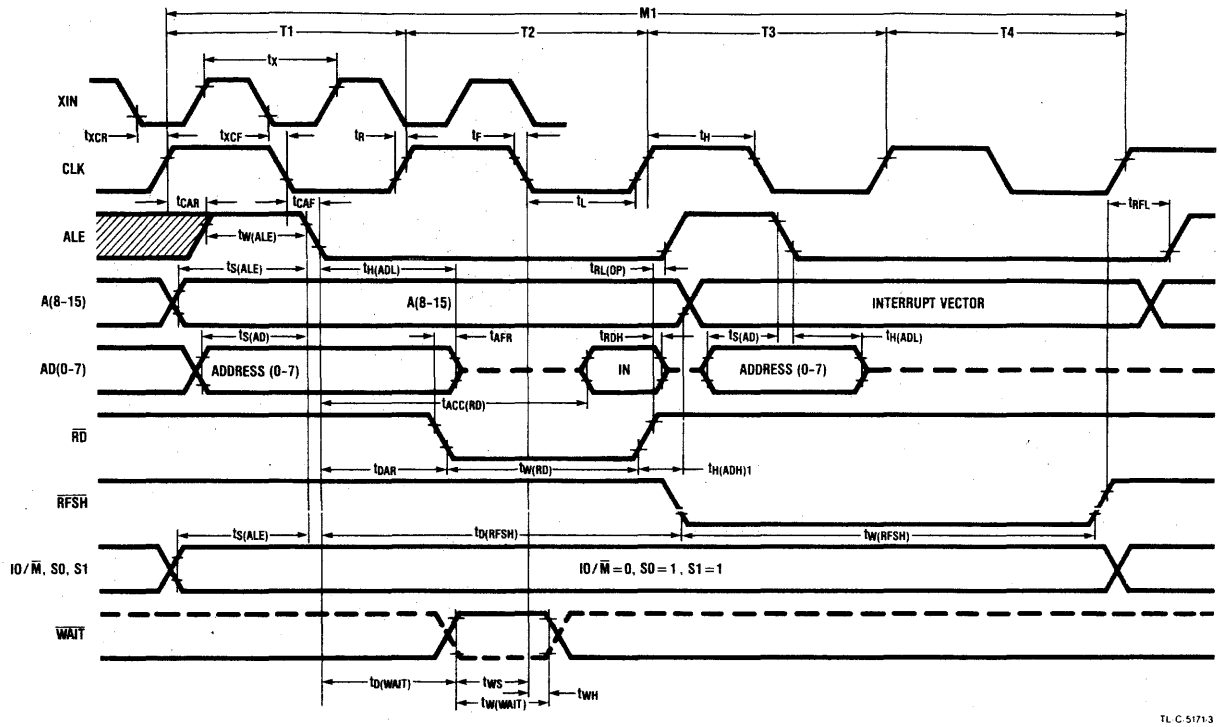

Memory Read and Write Cycle

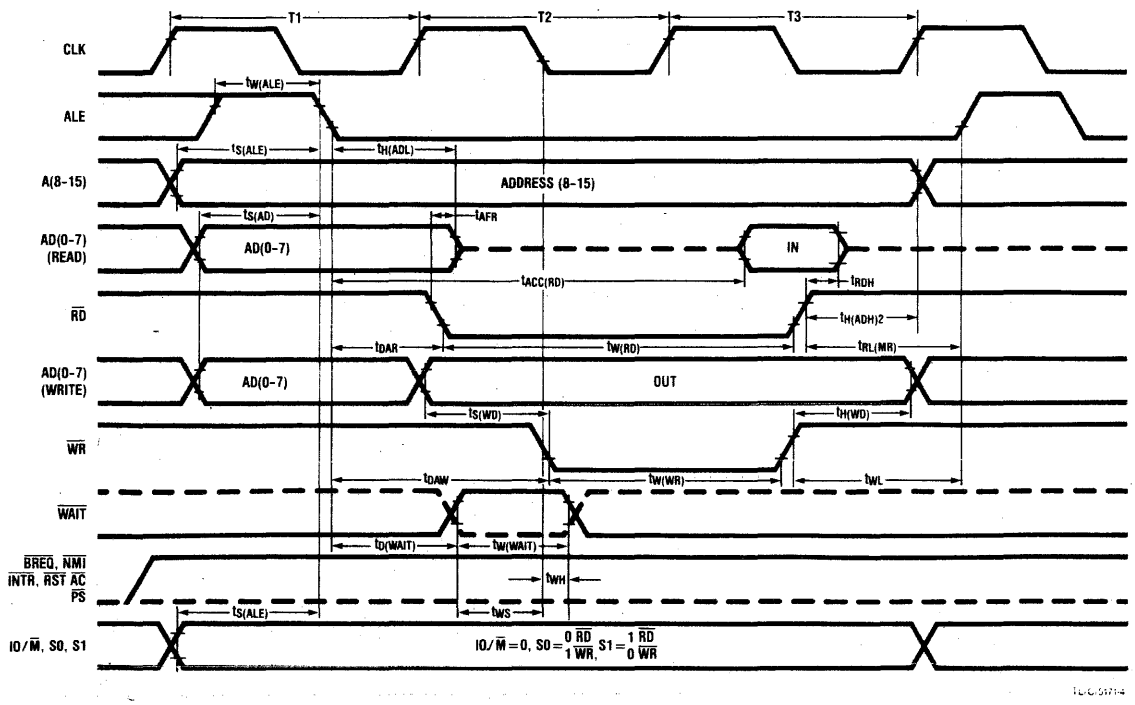

© iC MASTER 1984

Interrupt—Power-Save Cycle

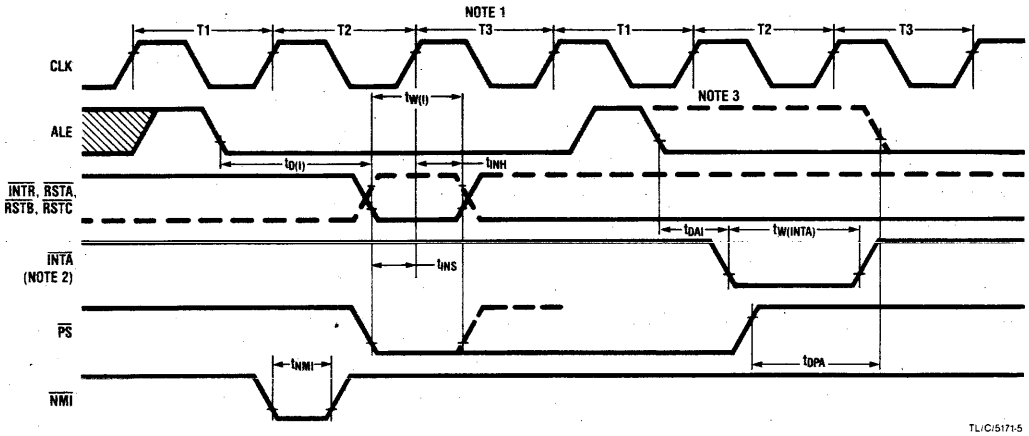

Note 1: This t state is the last t state of the last M cycle of any instruction.
Note 2: Response to INTR input.
Note 3: Response to PS input.

Bus Acknowledge Cycle

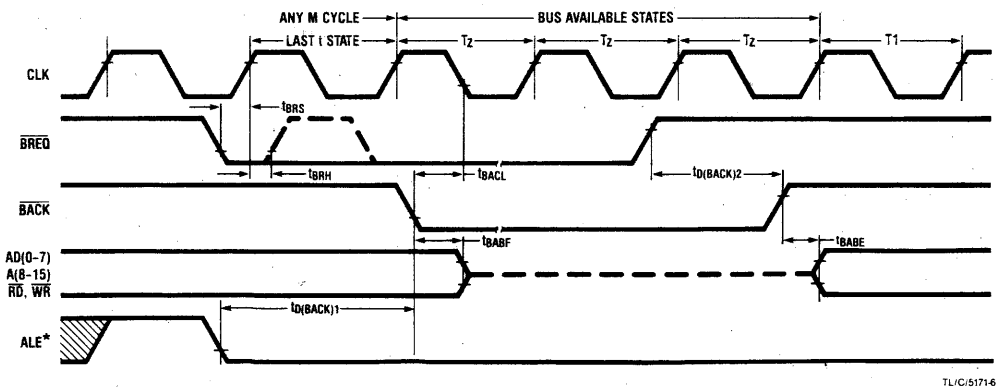

*Waveform not drawn to proportion. Use only for specifying test points.

AC Testing Input/Output Waveform

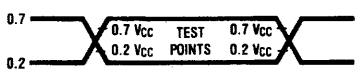

AC Testing Load Circuit

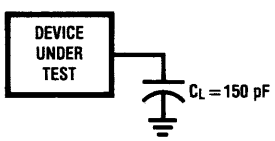

TABLE I. BUS TIMING AS T DEPENDENT

Symbol	1/T < 2.5 MHz	2.5 MHz < 1/T < 4.0 MHz		Symbol	1/T < 2.5 MHz	2.5 MHz < 1/T < 4.0 MHz	
t_L	(1/2)T − 10	(1/2)T − 30	Min	$t_{D(RFSH)}$	(3/2 + N)T	(3/2 + N)T − 50	Min
t_H	(1/2)T − 50	(1/2)T − 45	Min	$t_{D(WAIT)}$	(1/2)T + 50	(1/2)T	Max
$t_{ACC(RD)}$	(1 + N)T + 100	(1 + N)T + 50	Max	$t_{H(ADH)2}$	(1/2)T − 100	(1/2)T − 65	Min
t_{BABE}	T	T	Max	$t_{H(ADL)}$	(1/2)T − 100	(1/2)T − 75	Min
t_{BACL}	(1/2)T − 75	(1/2)T − 70	Min	$t_{H(WD)}$	(1/2)T − 100	(1/2)T − 50	Min
t_{DAI}	(1/2)T + 30	(1/2)T − 25	Min	$t_{RL(MR)}$	(1/2)T − 50	(1/2)T − 40	Min
t_{DAR}	(1/2)T + 25	(1/2)T	Min	$t_{S(AD)}$	(1/2)T − 120	(1/2)T − 85	Min
t_{DAR}	(1/2)T + 50	(1/2)T + 35	Max	$t_{S(ALE)}$	(1/2)T − 100	(1/2)T − 75	Min
t_{DAW}	T − 10	T − 30	Min	$t_{S(WD)}$	(1/2)T − 115	(1/2)T − 75	Min
t_{DAW}	T + 10	T	Max	$t_{W(ALE)}$	(1/2)T − 70	(1/2)T − 50	Min
$t_{D(BACK)1}$	(5/2 + N)T	(5/2 + N)T − 25	Min	$t_{W(INTA)}$	(1 + N)T	(1 + N)T − 50	Min
$t_{D(BACK)2}$	(1/2)T	(1/2)T	Min	t_{WL}	(1/2)T − 50	(1/2)T − 35	Min
$t_{D(BACK)2}$	(3/2)T + 100	(3/2)T + 100	Max	$t_{W(RD)}$	(1 + N)T	(1 + N)T − 25	Min
$t_{D(I)}$	(3/2 + N)T − 125	(3/2 + N)T − 125	Max	$t_{W(RFSH)}$	2T − 75	2T − 100	Min
t_{DPA}	(1/2)T	(1/2)T	Min	$t_{W(WR)}$	(1 + N)T	(1 + N)T − 30	Min
t_{DPA}	(3/2)T + 50	(3/2)T + 100	Max				

Note: N is equal to number of WAIT states.

Functional Pin Descriptions

The following describes the function of all NSC800 input/output pins. Some of these descriptions reference internal circuits.

INPUT SIGNALS

Reset Input ($\overline{\text{RESET IN}}$): Active low. Sets A (8–15) and AD (0–7) to TRI-STATE® (high impedance). Clears the contents of PC, I and R registers, disables interrupts, and causes a reset output to be activated.

Bus Request ($\overline{\text{BREQ}}$): Active low. Used when another device is requesting the system bus. $\overline{\text{BREQ}}$ is recognized at the end of the current machine cycle, then A(8–15), AD(0–7), IO/$\overline{\text{M}}$, $\overline{\text{RD}}$, and $\overline{\text{WR}}$ are set to the high impedance mode and the request is acknowledged via the $\overline{\text{BACK}}$ output signal.

Non-Maskable Interrupt ($\overline{\text{NMI}}$): Active low. The non-maskable interrupt, generated by the peripheral device(s), is the highest priority interrupt request line. The interrupt is edge sensitive and only a pulse is required to set an internal flip-flop which generates the internal interrupt request. Since the $\overline{\text{NMI}}$ flip-flop is monitored on the same clock edge as the other interrupts, it must also meet the minimum set-up time spec for the interrupt to be accepted in the current machine instruction. Once the interrupt is accepted the flip-flop is reset automatically. Its execution is independent of the interrupt enable flip-flop. $\overline{\text{NMI}}$ execution involves saving the PC on the stack and automatic branching to restart address X'0066 in memory.

Restart Interrupts A, B, C ($\overline{\text{RSTA}}$, $\overline{\text{RSTB}}$, $\overline{\text{RSTC}}$): Active low level sensitive. Restarts generated by the peripherals are recognized at the end of the current instruction if their respective interrupt enable bits and master enable bit are set. Execution is identical to $\overline{\text{NMI}}$ except interrupts are enabled for the following restart addresses:

Name	Restart Address (X')
$\overline{\text{NMI}}$	0066
$\overline{\text{RSTA}}$	003C
$\overline{\text{RSTB}}$	0034
$\overline{\text{RSTC}}$	002C
$\overline{\text{INTR}}$ (Mode 1)	0038

The order of priority is fixed (highest first) as follows:

1) $\overline{\text{NMI}}$ 2) $\overline{\text{RSTA}}$ 3) $\overline{\text{RSTB}}$ 4) $\overline{\text{RSTC}}$ 5) $\overline{\text{INTR}}$

Interrupt Request ($\overline{\text{INTR}}$): Active low level sensitive. An interrupt request input generated by a peripheral device is recognized at the end of the current instruction provided that the interrupt enable and master interrupt enable bits are set. $\overline{\text{INTR}}$ is the lowest priority interrupt request input. Under program control, $\overline{\text{INTR}}$ can be executed in three distinct modes in conjunction with the $\overline{\text{INTA}}$ output.

Wait ($\overline{\text{WAIT}}$): Active low. When set low during $\overline{\text{RD}}$, $\overline{\text{WR}}$ or $\overline{\text{INTA}}$ machine cycles, the CPU extends its machine cycle in increments of t (wait) states. The wait machine cycle continues until the $\overline{\text{WAIT}}$ input returns high.

The wait strobe input will be accepted only during machine cycles that have $\overline{\text{RD}}$, $\overline{\text{WR}}$ or $\overline{\text{INTA}}$ strobes and during the machine cycle immediately after an interrupt has been accepted by the CPU. The later cycle has its RD strobe suppressed but it will still accept the wait.

Power-Save ($\overline{\text{PS}}$): Active low. $\overline{\text{PS}}$ is sampled at the end of the current instruction cycle. When $\overline{\text{PS}}$ is low, the CPU stops executing at the end of current instruction and keeps itself in the low-power mode. Normal operation resumes when $\overline{\text{PS}}$ is returned high.

© IC MASTER 1984

Functional Pin Descriptions (Continued)

OUTPUT SIGNALS

Bus Acknowledge ($\overline{BACK}$): Active low. $\overline{BACK}$ indicates to the bus requesting device that the CPU bus and its control signals are in the TRI-STATE mode. The requesting device may then take control of the bus and its control signals.

Address Bits 8-15 [A(8-15)]: Active high. These are the most significant 8 bits of the memory address during a memory instruction. During an I/O instruction, the port address on the lower 8 bits of address get duplicated onto these 8 bits. During a BREQ/BACK cycle, the A (8-15) bus is in the TRI-STATE mode.

Reset Out (RESET OUT): Active high. When RESET OUT is high, it indicates the CPU is being reset. The signal is normally used to reset the peripheral devices.

Input/Output/Memory (IO/$\overline{M}$): An active high on the IO/$\overline{M}$ output signifies that the current machine cycle is relative to an input/output device. An active low on the IO/$\overline{M}$ output signifies that the current machine cycle is relative to memory. It is TRI-STATE during $\overline{BREQ}$/$\overline{BACK}$ cycles.

Refresh ($\overline{RFSH}$): Active low. The refresh output indicates that the dynamic RAM refresh cycle is in progress. $\overline{RFSH}$ goes low during T3 and T4 states of all M1 cycles. During the refresh cycle, AD(0-7) has the refresh address and A(8-15) indicates the interrupt vector register I.

Address Latch Enable (ALE): ALE is active only during the T1 state of any M cycle and also T3 state of M1 cycle. The high to low transition of ALE indicates that a valid memory/I-O/refresh address is available on the AD(0-7) lines.

Read Strobe ($\overline{RD}$): Active low. On the trailing edge of the $\overline{RD}$ strobe, data is input to the CPU via the AD(0-7) lines. The $\overline{RD}$ line is in the TRI-STATE mode during $\overline{BREQ}$/$\overline{BACK}$ cycles.

Write Strobe ($\overline{WR}$): While the $\overline{WR}$ line is low, valid data is output by the CPU on the AD(0-7) lines. The $\overline{WR}$ line is in the TRI-STATE mode during $\overline{BREQ}$/$\overline{BACK}$ cycles.

Clock (CLK): CLK is an output provided for use as a system clock. The CLK output is a square wave at one half the input frequency.

Interrupt Acknowledge ($\overline{INTA}$): Active low. The interrupt acknowledge output is activated in the M1 cycle (S) immediately following the t state in which the $\overline{INTR}$ input is recognized. [Output is normally used to gate the interrupt response vector from the peripheral controller onto the AD(0-7) lines.] It is used in two of the three interrupt modes. In mode 0, an instruction is gated onto the AD(0-7) line during $\overline{INTA}$. There will be from 1 to 4 $\overline{INTA}$ strobes issued for each mode 0 interrupt. The amount of $\overline{INTA}$ strobes issued is instruction dependent. In mode 2, a single interrupt response vector is gated onto the data bus. In mode 1, $\overline{INTA}$ is not used. In this mode, $\overline{INTR}$ functions like the restart interrupts.

Status (S0, S1): Bus status outputs indicate encoded information regarding the ensuing M cycle as follows:

Machine Cycle	Status			Control	
	S0	S1	IO/$\overline{M}$	$\overline{RD}$	$\overline{WR}$
Opcode Fetch	1	1	0	0	1
Memory Read	0	1	0	0	1
Memory Write	1	0	0	1	0
I/O Read	0	1	1	0	1
I/O Write	1	0	1	1	0
Halt*	0	0	0	0	1
Internal Operation*	0	1	0	1	1
Acknowledge of Int**	1	1	0	1	1

* ALE is not suppressed in this cycle.

** This is the cycle that occurs immediately after the CPU accepts an interrupt ($\overline{RSTA}$, $\overline{RSTB}$, $\overline{RSTC}$, $\overline{INTR}$, $\overline{NMI}$).

Note 1: During halt, CPU continues to do dummy opcode fetch from location following the halt instruction with a halt status. This is so CPU can continue to do its dynamic RAM refresh.

Note 2: No early status is provided for interrupt or hardware restarts.

INPUT/OUTPUT SIGNALS

Power (V_{CC}): +5V supply.

Ground (GND): 0V reference.

Crystal (XIN, XOUT): XIN may be used as an external clock input.

Multiplexed Address/Data [AD(0-7)]: Active high

At $\overline{RD}$ Time:	Input data to CPU.
At $\overline{WR}$ Time:	Output data from CPU.
At Falling Edge of ALE Time:	Least significant byte of address during memory reference cycle. 8-bit port address during I/O reference cycle.
During $\overline{BREQ}$/$\overline{BACK}$ Cycle:	High impedance.

Input Protection

All inputs are protected from static charge with diode clamps to both V_{CC} and GND. Normal precautions taken with MOS devices are recommended.

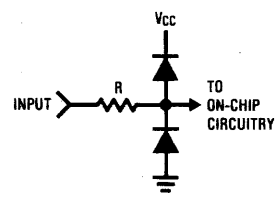

$100\Omega < R < 300\Omega$

National Semiconductor

National Semiconductor

Microcomputer/Microcontroller with Microwire Plus NS8050U, NS8040U, NS87P50U

General Description

NS8050U Microcomputer/Microcontroller with Microwire Plus is a self-contained, 8-bit parallel, 40-pin, dual-in-line device fabricated using National Semiconductor's scaled N-channel, silicon gate MOS process, XMOS™. The 8050U Microwire Plus device contains the system timing, control logic, ROM (where applicable) program memory and RAM data memory. Microwire™ Plus makes efficient use of every I/O line. Microwire Plus communicates with a variety of microwire peripherals such as the COP472 Display Driver or other 8050's. Thus, the Microwire Plus expands the capability of the 8050U family.

Microwire Plus consists basically of a three-wire communication port with a clocked 8-bit shift register. The shift register is referred to as the serial input/output register.

The three lines consist of a Serial Output (SO), a Serial Input (SI) and a Serial Clock (SK). For microwire applications, one 8050U must be designated as the master. The master supplies the clock for the microwire system and initiates all data transfers. All transfers are between the master and one or more slaves. A slave may be any microwire peripheral or another 8050U with microwire.

Features

- The master/slave feature is programmable
- NS87P50 Microwire Piggy-back Microcomputer
- NS8040 Microwire ROM-less
- NS8050U Microwire in 40-pin package
- 256 × 8 RAM array, 4K × 8 ROM array
- Serial data exchange with only three wires
- 8-bit timer/counter
- Binary and BCD arithmetic
- Single 5V power supply
- Low standby power
- Low voltage standby
- Expandable memory and I/O
- 2.5 μs cycle, 6 MHz clock; 1.36 μs cycle, 11 MHz clock

Block Diagram

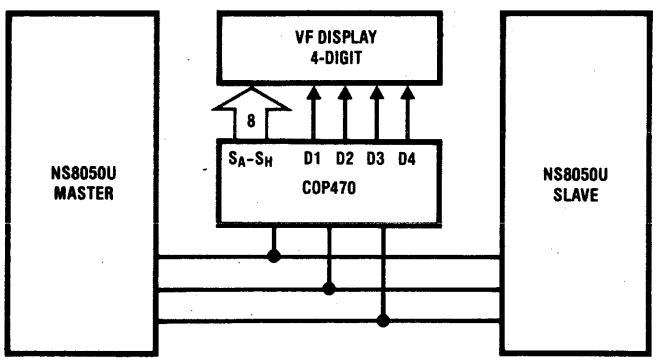

Connection Diagram

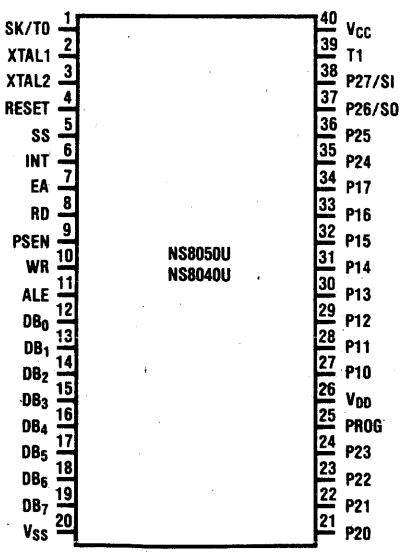

Microwire™ and XMOS™ are trademarks of National Semiconductor Corp.

© IC MASTER 1984

National Semiconductor

PRELIMINARY
October 1983

COP404C ROMless CMOS Microcontrollers

General Description

The COP404C ROMless Microcontroller is a member of the COPS™ family, fabricated using double-poly, silicon gate CMOS (P2CMOS) technology. The COP404C contains CPU, RAM, I/O and is identical to a COP444C device except the ROM has been removed and pins have been added to output the ROM address and to input the ROM data. The COP404C can be configured, by means of external pins, to function as a COP444C, a COP424C, or a COP410C. Pins have been added to allow the user to select the various functional options that are available on the family of mask-programmed CMOS parts. The COP404C is primarily intended for use in the development and debug of a COP program for the COP444C/445C, COP424C/425C, and COP410C/411C devices prior to masking the final part. The COP404C is also appropriate in low volume applications or when the program might be changing.

Features

- Accurate emulation of the COP444C, COP424C and COP410C
- Lowest Power Dissipation (50 μW typical)
- Fully static (can turn off the clock)
- Power saving IDLE state and HALT mode
- 4 μs instruction time, plus software selectable clocks
- 128 × 4 RAM, addresses 2k × 8 ROM
- True vectored interrupt, plus restart
- Three-level subroutine stack
- Single supply operation (2.4V to 5.5V)
- Programmable read/write 8-bit timer/event counter
- internal binary counter register with MICROWIRE™ serial I/O capability
- General purpose and TRI-STATE® outputs
- LSTTL/CMOS compatible
- MICROBUS™ compatible
- Software/hardware compatible with other members of the COP400 family
- Military devices (−55°C to +125°C) to be available

Block Diagram

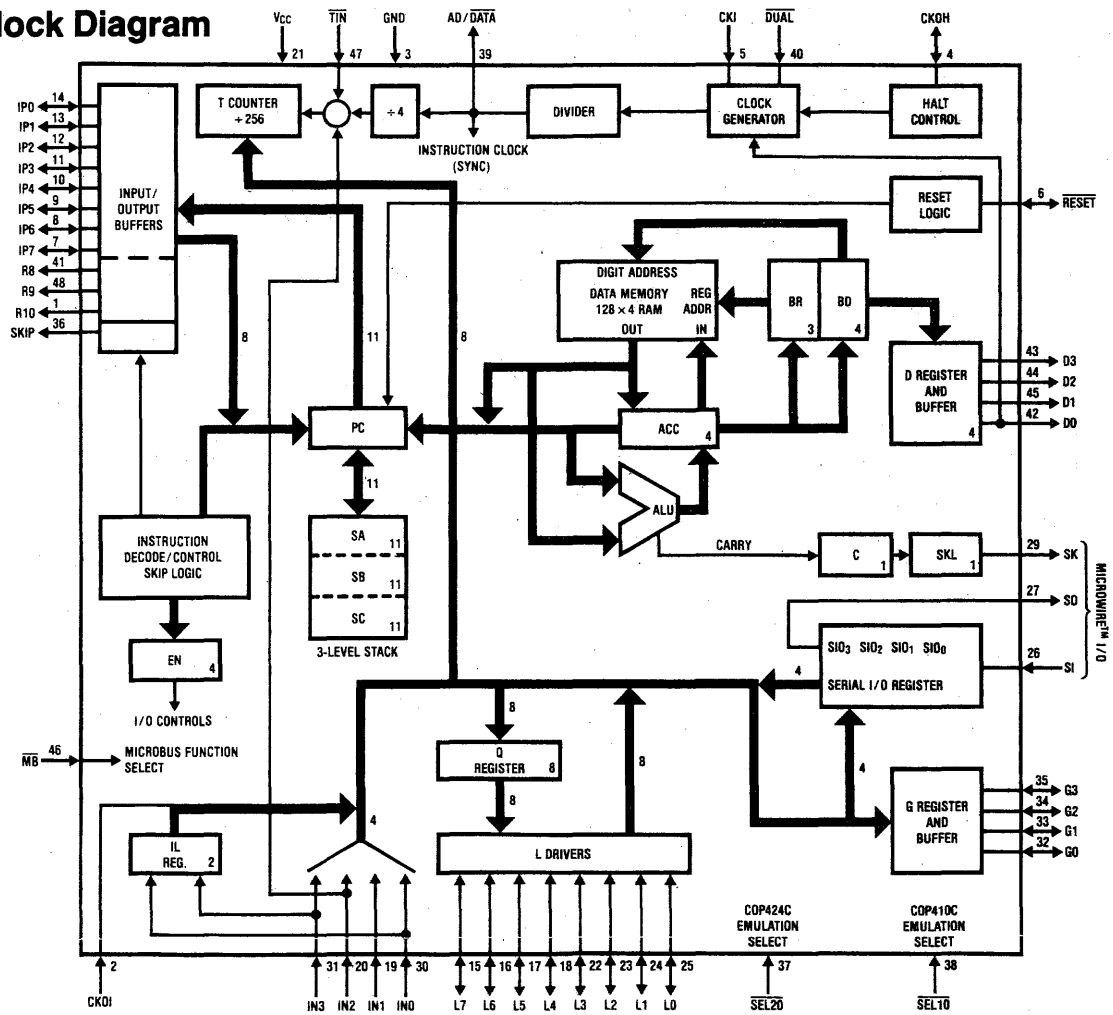

FIGURE 1

TL/B/5530–1

©1983 National Semiconductor Corporation TL/B/5530

RRD-B30M103/Printed in U. S. A.

© IC MASTER 1984

National Semiconductor

February 1983

COP410C/COP411C, COP310C/COP311C and COP210C/COP211C Single-Chip CMOS Microcontrollers

General Description

The COP410C, COP411C, COP310C, COP311C, COP210C, and COP211C fully static, single-chip CMOS microcontrollers are members of the COPS™ family, fabricated using double-poly, silicon-gate CMOS technology. These controller-oriented processors are complete microcomputers containing all system timing, internal logic, ROM, RAM, and I/O necessary to implement dedicated control functions in a variety of applications. Features include single supply operation, a variety of output configuration options, with an instruction set, internal architecture, and I/O scheme designed to facilitate keyboard input, display output, and BCD data manipulation. The COP411C is identical to the COP410C but with 16 I/O lines instead of 20. They are an appropriate choice for use in numerous human interface control environments. Standard test procedures and reliable high-density fabrication techniques provide the medium to large volume customers with a customized controller-oriented processor at a low end-product cost.

The COP310C/COP311C is the extended temperature range version of the COP410C/COP411C, and the COP210C/COP211C is the military temperature range version of the COP410C/COP411C.

TRI-STATE® is a registered trademark of National Semiconductor Corp.
COPS™ and MICROWIRE™ are trademarks of National Semiconductor Corp.

Features

- Lowest power dissipation (40 μW typical)
- Low cost
- Power-saving HALT mode with Continue function
- Powerful instruction set
- 512 × 8 ROM, 32 × 4 RAM
- 20 I/O lines (COP410C)
- Two-level subroutine stack
- DC to 4 μs instruction time
- Single supply operation (2.4V to 5.5V)
- General purpose and TRI-STATE® outputs
- Internal binary counter register with MICROWIRE™ compatible serial I/O
- LSTTL/CMOS compatible in and out
- Software/hardware compatible with other members of the COP400 family
- Extended temperature (−40°C to +85°C) devices available
- Military temperature (−55°C to +125°C) devices to be available

Note: At time of printing electrical specifications were not available.

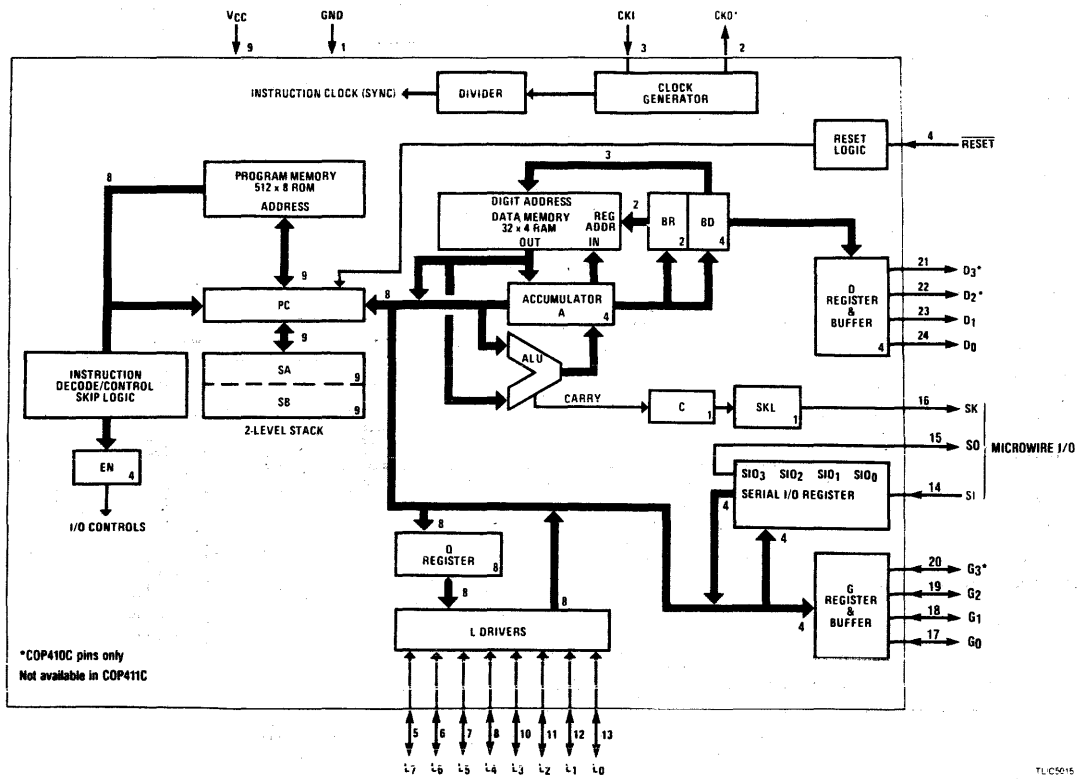

FIGURE 1. COP410C/411C Block Diagram

© 1983 National Semiconductor Corp. TL/C5015

DA-B25M23/Printed in U.S.A.

© IC MASTER 1984

National Semiconductor

PRELIMINARY
August 1983

COP424C, COP425C, COP324C, COP325C and COP444C, COP445C, COP344C, COP345C Single Chip 1k and 2k CMOS Microcontrollers

General Description

The COP424C, COP425C, COP444C and COP445C fully static, Single-Chip CMOS Microcontrollers are members of the COPS™ family, fabricated using double-poly, silicon gate CMOS (P2CMOS™) technology. These Controller Oriented Processors are complete microcomputers containing all system timing, internal logic, ROM, RAM, and I/O necessary to implement dedicated control functions in a variety of applications. Features include single supply operation, a variety of output configuration options, with an instruction set, internal architecture and I/O scheme designed to facilitate keyboard input, display output and BCD data manipulation. The COP424C and COP444C are 28 pin chips. The COP425C and COP445C are 24-pin versions (4 inputs removed). Standard test procedures and reliable high-density techniques provide the medium to large volume customers with a customized microcontroller at a low end-product cost. These microcontrollers are appropriate choices in many demanding control environments especially those with human interface.

The COP424C is an improved product which replaces the COP420C.

Features:

- Lowest Power Dissipation (50 μW typical)
- Fully static (can turn off the clock)
- Power saving IDLE state and HALT mode
- 4 μs instruction time, plus software selectable clocks
- 2k × 8 ROM, 128 × 4 RAM (COP444C/COP445C)
- 1k × 8 ROM, 64 × 4 RAM (COP424C/COP425C)
- 23 I/O lines (COP444C and COP424C)
- True vectored interrupt, plus restart
- Three-level subroutine stack
- Single supply operation (2.4V to 5.5V)
- Programmable read/write 8-bit timer/event counter
- Internal binary counter register with MICROWIRE™ serial I/O capability
- General purpose and TRI-STATE® outputs
- LSTTL/CMOS compatible
- MICROBUS™ compatible
- Software/hardware compatible with COP400 family
- Extended temperature range devices COP324C/COP325C and COP344C/COP345C (−40°C to +85°C)
- Military devices (−55°C to +125°C) to be available

COPS™, MICROBUS™, MICROWIRE™, and P2CMOS™ are trademarks of National Semiconductor Corp.
TRI-STATE® is a registered trademark of National Semiconductor Corp.

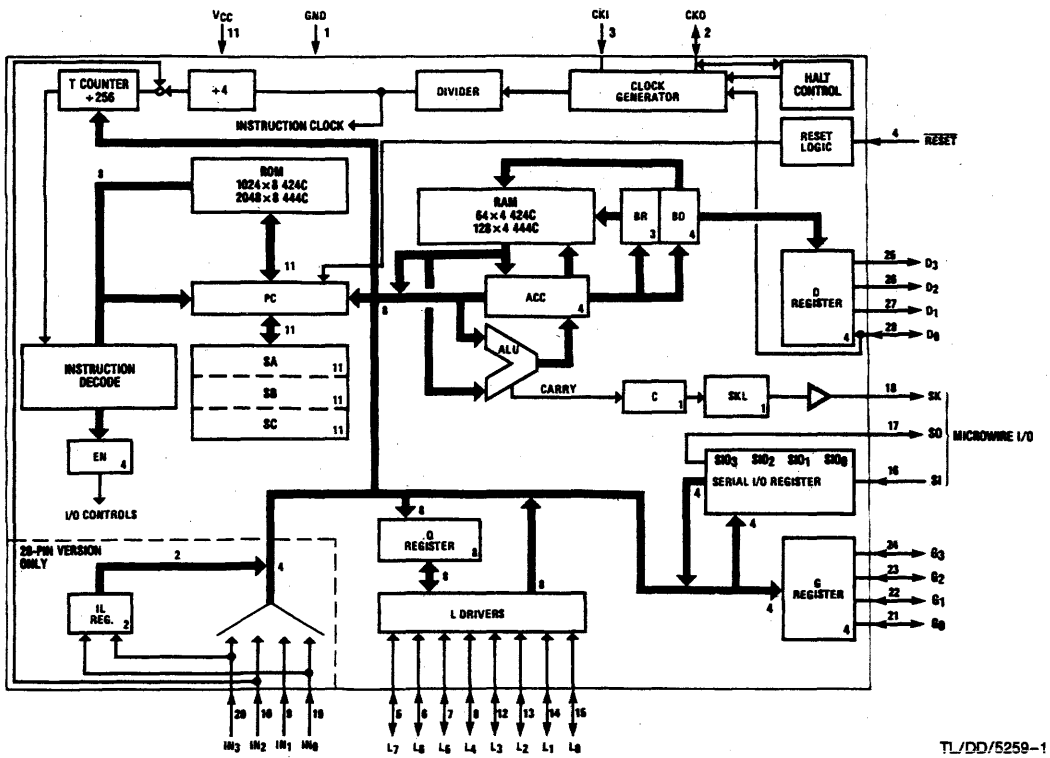

FIGURE 1. Block Diagram

©1983 National Semiconductor Corporation TL/DD/5259

RRD-B30M83/Printed in U. S. A.

National Semiconductor

NS455-Series Microcontroller

General Description

The NS455 is a CRT terminal controller on a chip. It is a microcomputer system which replaces the following LSI circuits commonly found in a CRT data terminal:

- Microcomputer
- Program ROM
- CRT Controller
- DMA Controller
- Character Generator
- UART
- Baud Rate Generator
- Interrupt Controller
- Parallel I/O Controller
- Timer

In addition, the NS455 includes powerful attribute logic, two graphics display modes, and fast video output circuits.

The NS455 is primarily intended for use in low-cost terminals, but contains many features which make it a superior building block for "smart" terminals and word processing systems.

The NS455 interfaces easily to the display monitor, keyboard, display memory, and I/O ports. The architecture and instruction set are derived from the 8048-Series microcontrollers. The instruction set has been enhanced and the architecture tailored to allow the NS455 CPU to efficiently manage a large display memory and an extensive interrupt environment.

Features

- Enhanced 8048 instruction set and architecture
- On-board ROM 2K × 8 — up to 8K × 8 external with ROM expand bus
- On-board RAM 64 × 8
- Programmable display format
- On-board video memory management unit
- 16-bit bidirectional display memory bus (direct video and attribute RAM interface)
- Built-in timer
- Real-time clock (may be programmed for 1 Hz)
- Video control signals
- Eight independent attributes
- Pixel and block graphics display modes
- Programmable cursor characteristics
- Programmable CRT refresh rate
- Light pen feature
- UART, programmable baud rate up to 19.2K baud
- Character generator (128 7 × 11 characters)
- Single 5V supply @ 120 mA (typ.)
- Up to 18 MHz video dot rate (12 MHz CPU clock)
- 48-pin package
- 8-bit parallel I/O port (multiplexed with external ROM)
- Extensive I/O expansion capabilities

© IC MASTER 1984

© IC MASTER 1984

NS455-Series Detailed Block Diagram

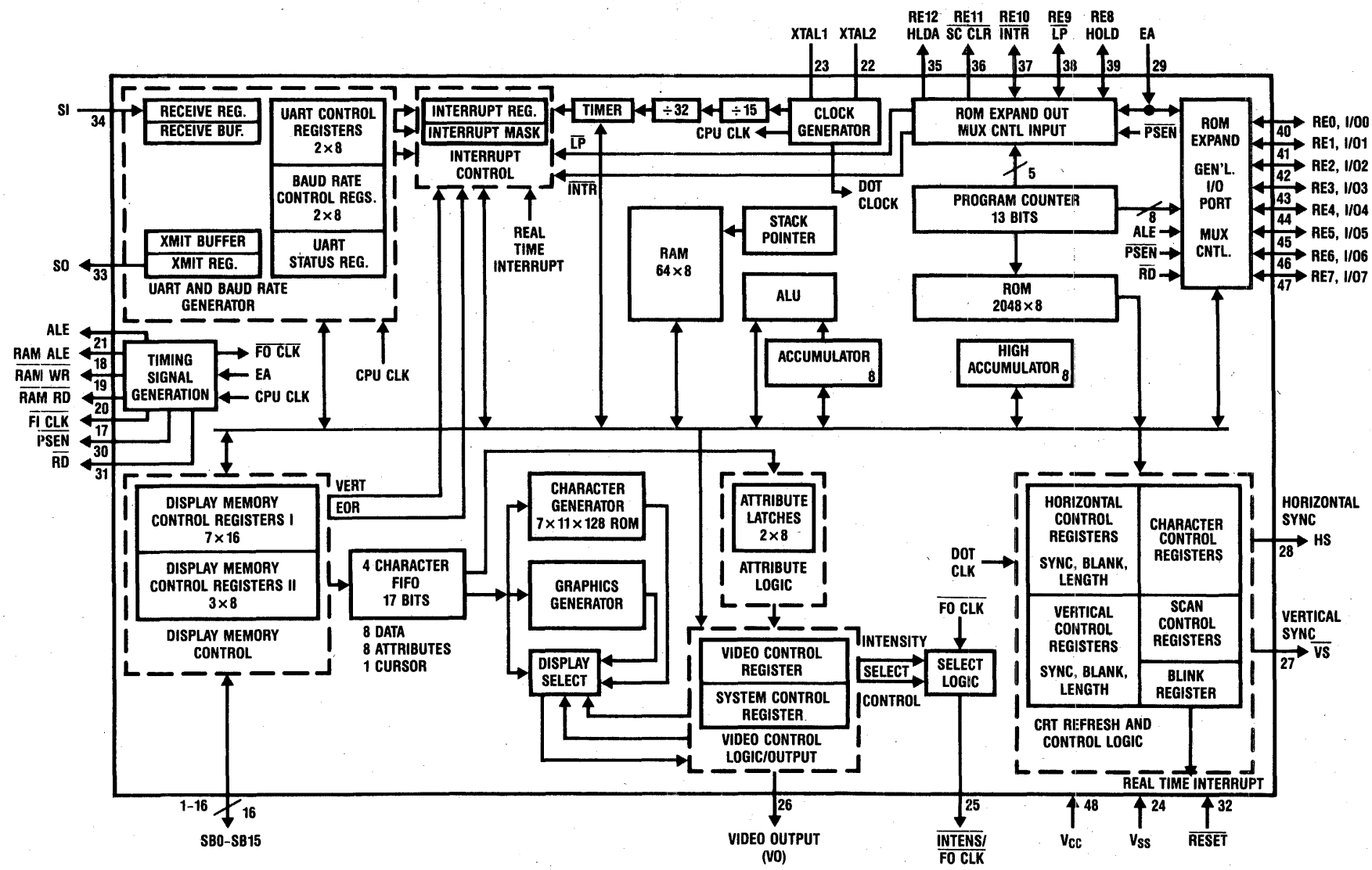

National Semiconductor

IC MASTER

INTERNATIONAL DISTRIBUTORS

ARGENTINA, COLUMBIA, ECUADOR, VENEZUELA, MEXICO, PERU
Intectra
2629 Terminal Blvd.
Mt. View, CA 94043
Tel. (415) 967-8818

AUSTRALIA
A J Distributors Pty Ltd.
P.O. Box 71
Prospect, S. Australia 5082
Tel. 269-1244
Telex (790) 82635

AUSTRIA
Becos Electronic Ges. M.G.H.
Gablenzgasse 52
A-1160 Vienna, Austria
Tel. 0222/959145
Telex (847) 134606

BELGIUM
J. P. LeMaire S.A.
Limberg, Stirum 243
1810 Wemmel, Belgium
Tel. 02/4784847
Telex (846) 24610

BRAZIL
Filcres Importacao
Rua Aurora
CEP 01209
Caixa Postal 18767
Sao Paulo, Brazil
Tel. (011) 223 7388
Telex (391) 113298

CANADA
Future Electronics
237 Hymus Blvd.
Pointe Claire
Quebec H9R 5C7
Canada
Tel. 514-694-7710
TWX: 610-421-3251
Telex 05-823554

DENMARK
Advanced Electronik
55, Mariendalsvej
DK2000, Copenhagen F, Denmark
Tel. 01 194433
Telex (855) 22431

ENGLAND
Paterson/Steadman & Partner Ltd.
The Hub
Emson Close
Saffron Walden, Essex
CB10 1HL, England
Tel. 27067
Telex (851) 81653

J. B. Tratsart Ltd.
Dogmersfield Nr.
Baskingstroke
Hampshire RG27 8SU, England
Tel. 02514 3334
Telex (851) 916196

FINLAND
ITT Multikomponent
Tyopajakatu 5
PL107,00501
Helsinki 50, Finland
Tel. 739100
Telex (857) 121450

FRANCE
Conseilet Promotion
28 Rue de la Procession
92150 Suresnes, France
Tel. 5064275
Telex (842) 614596F

HOLLAND
Manudax-Nederland B.V.
54732G Heeswijk (N.B.)
Meerstraat 7, Holland
Tel. 04139 2901
Telex (844) 50175

HONG KONG
Conmos Products, Ltd.
Haynein Bldg., 11th Floor
1 Tai Yip Street
Keun Tong, Kowloon, Hong Kong
Tel. 3-684572
Telex (780) 85448

INDIA, MALAYSIA, SINGAPORE, THAILAND
Radio & Craft Publications
4794/23 Bharat Ram Road
Daryanganj, New Delhi 2, India
Tel. 277147

ISRAEL
STG International Ltd.
10 Humberman Street
P. O. Box 1276
61012 Tel Aviv, Israel
Tel. 248231
Telex (922) 342229

ITALY
Gruppo Editoriale Jackson S.R.L.
Via Rosellini 12
20124 Milan, Italy
Tel. 68 80951
Telex (843) 315366

JAPAN
Asahi Glass Company, Ltd. Electronic Components Group
1-2 Marunouchi 2-chome
Chiyoda-ku, Tokyo 100, Japan
Tel. (03) 218-5813
Telex (781) TK4616

Overseas Data Service Co. Ltd.
Shugetsu Building No. 12-7
Kita-Aoyama 3-chome
Minato-ku, Tokyo 107, Japan
Tel. (03) 400-7090
Telex (781) J26487

Tokyo International Communications Inc.
Miyajima Bldg.
28 Yoyogi 1-chome,
Shibuya-ku
Tokyo 151, Japan
Tel. 379-2561
Telex (781) 33106

NORWAY
Fagbokservice A.S.
Ekebergn, 130B
Box 94
Bekkelagshogda, Oslo 2, Norway
Tel. (02) 282237

SOUTH AFRICA
Suntronika
Dargene House,
10 Station Street
Braamfontein, Johannesburg
South Africa
Tel. 725-1210
Telex (960) 4-24143

SPAIN
Sagitron
Castello 25, 2, °
Madrid 1, Spain
Tel. 402 6085
Telex (831) 43819

SWEDEN
Fertronic AB
Snormakarvagen 35
Box 56,
16126 Bromma, Sweden
Tel. 08/252610
Telex (854) 11181

SWITZERLAND
W. Stolz AG
Taefernstrasse 15
CH-5404 Baden-Daettwil
Switzerland
Tel. 056 840151
Telex (845) 54070Z

TAIWAN
Helm Engineering & Trading Co.
49 No. 143 Section 4
Hsin Yi Rd.
Taipei, Taiwan, ROC
Tel. 709-1888
Telex (785) 28204

TURKEY
EMPA Elektronik (Mamulleri Pazarlama AS)
Tersane Cad. Kuthan 38/408
Tr-Kara Koy — Istanbul, Turkey
Tel. (11) 496249
Telex 24429

WEST GERMANY
Astronic GmbH
Winzererstrasse 47d
8000 Munich 40, West Germany
Tel. (089) 309031
Telex (841) 5216187

Hearst
HEARST BUSINESS COMMUNICATIONS, INC./UTP DIVISION
645 Stewart Avenue, Garden City, NY 11530 (516) 222-2500 TWX: 510-222-1673

NEC
NEC Electronics

PRELIMINARY

μPD7201A MULTIPROTOCOL SERIAL COMMUNICATION CONTROLLER

Description

The μPD7201A is a dual-channel multifunction peripheral communication controller designed to satisfy a wide variety of serial data communication requirements in computer systems. Its basic function is a serial-to-parallel, parallel-to-serial converter/controller and within that role it is configurable by systems software so its "personality" can be optimized for a given serial data communications application.

The μPD7201A is capable of handling asynchronous and synchronous byte-oriented protocols such as IBM Bisync, and synchronous bit-oriented protocols such as HDLC and IBM SDLC. This versatile device can also be used to support virtually any other serial protocol for applications other than data communications.

The μPD7201A can generate and check CRC codes in any synchronous mode and can be programmed to check data integrity in various modes. The device also has facilities for modem controls in both channels. In applications where these controls are not needed the modem controls can be used for general-purpose I/O.

Features

- ☐ Two fully independent duplex serial channels
- ☐ Four independent DMA channels for send/received data for both serial inputs/outputs
- ☐ Programmable interrupt vectors and interrupt priorities
- ☐ Modem controls signals
- ☐ Variable software programmable data rate, up to 1.25M baud at 5MHz clock
- ☐ Double buffered transmitter data and quadruply buffered received data
- ☐ Programmable CRC algorithm
- ☐ Selection of Interrupt, DMA or Polling mode of operation
- ☐ Asynchronous operation
  - Character length: 5, 6, 7, or 8 bits
  - Stop bits: 1, 1½, 2
  - Transmission speed: x1, x16, x32, or x64 clock frequency
  - Parity: odd, even, or disable
  - Break generation and detection
  - Interrupt on parity, overrun, or framing errors
- ☐ Monosync, bisync, and external sync operations
  - Software selectable sync characters
  - Automatic sync insertion
  - CRC generation and checking
- ☐ HDLC and SDLC operations
  - Abort sequence generation and detection
  - Automatic zero insertion and detection
  - Address field recognition
  - CRC generation and checking
  - I-field residue handling
- ☐ N-channel MOS technology
- ☐ Single +5V power supply; interface to most microprocessors including 8080, 8085, 8086, and others.
- ☐ Single-phase TTL clock
- ☐ Available in plastic and ceramic dual-in-line packages

Pin Configuration

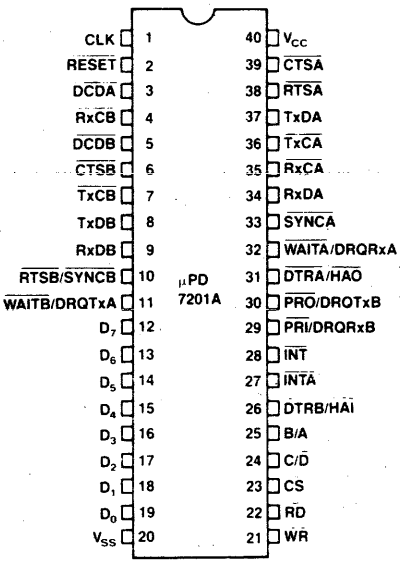

Pin Identification

Pin No.	Symbol	Name	I/O	Description
1	CLK	System Clock	I	A TTL-level system clock signal is applied to this input. The system clock frequency must be at least 4.5 times the data clock frequency applied to any of the data clock inputs (TxCA, TxCB, RxCA, or LRxCB).
2	RESET	Reset	I	A low on this input (one complete CLK cycle minimum) initializes the MPSC² to the following conditions: disables the receivers and transmitters; sets TxDA and TxDB to marking (high); and sets the modem control outputs (DTRA, DTRB, RTSA, RTSB) high. Additionally, all interrupts are disabled and all interrupt and DMA requests are cleared. All control registers must be rewritten after a reset and before a restart. (Active low)
3, 5	DCDA, DCDB	Data Carrier Detect	I	Data carrier detect generally indicates the presence of valid serial data at RxD. The MPSC² may be programmed so that the receiver is enabled only when DCD is low, and also so that any change in state that lasts longer than the minimum specified pulse width causes an interrupt and latches the DCD status bit to the new state. (Active low)
4, 35	RxCA, RxCB	Receiver Clocks	I	The receiver clock controls the sampling and shifting of serial data at RxD. The MPSC² may be programmed so that the clock rate is 1x, 16x, 32x, or 64x the data rate. RxD is sampled on the rising edge of RxC. RxC features a Schmitt-trigger input for relaxed rise and fall time requirements. (Active low)
6, 39	CTSA, CTSB	Clear to Send	I	Clear to send generally indicates that the receiving modem or peripheral is ready to receive data from the MPSC². The MPSC² may be programmed so that the transmitter is enabled only when CTS is low. As with DCD, the MPSC² may be programmed to cause an interrupt and latch the new state when CTS changes state for longer than the minimum specified pulse width. (Active low)

REV/1

© IC MASTER 1984

Pin Identification

Pin No.	Pin Symbol	Pin Name	I/O	Description
7, 36	$\overline{TxCA}$, $\overline{TxCB}$	Transmitter Clocks	I	The transmitter clock controls the rate at which data is shifted out at TxD. The MPSC² may be programmed so that the clock rate is 1x, 16x, 32x, or 64x the data rate. Data changes on the falling edge of TxC. TxC features a Schmitt-trigger input for relaxed rise and fall time requirements. (Active low)
8, 37	TxDA, TxDB	Transmit Data	O	Serial data from the MPSC² is output on these pins. (Marking high)
9, 34	RxDA, RxDB	Receive Data	I	Serial data to the MPSC² is input on these pins. (Marking high)
10, 33	$\overline{SYNCA}$, $\overline{SYNCB}$	Synchronization (Sync)	I/O	The function of the Sync pin depends on the MPSC² operating mode. In asynchronous mode, Sync is an input that the processor can read. It can be programmed to generate an interrupt in the same manner as $\overline{DCD}$ or $\overline{CTS}$. In external sync mode, $\overline{SYNC}$ is also an input that notifies the MPSC² that synchronization has been achieved. (See the timing waveforms for details). Once synchronization is achieved, $\overline{SYNC}$ should be held low until synchronization is lost or a new message is about to start. In internal synchronization modes (monosync, bisync, SDLC), $\overline{SYNC}$ is an output which is active wherever a Sync character match is made. There is no qualifying logic associated with this function. Regardless of character boundaries, $\overline{SYNC}$ is active on any match. (Active low)
10, 38	$\overline{RTSA}$, $\overline{RTSB}$	Request to Send	O	When the MPSC² is operated in one of the synchronous modes, $\overline{RTSA}$ and $\overline{RTSB}$ are general-purpose outputs that may be set or reset with commands to the MPSC². In asynchronous mode, $\overline{RTS}$ is active immediately as soon as it is programmed on. However, when programmed off, $\overline{RTS}$ remains active until the transmitter is completely empty. This feature simplifies the programming required to perform modem control. (Active low)
11, 29, 30, 32,	DRQTxA, DRQTxB, DRQRxA, DRQRxB	DMA Request	O	When these lines are active, they indicate to a DMA controller that a transmitter or receiver is requesting a DMA data transfer. (Active high)
11, 32	$\overline{WAITA}$ $\overline{WAITB}$	Wait	O	These outputs synchronize the processor with the MPSC² when block transfer mode is used. It may be programmed to operate with either the receiver or transmitter, but not both simultaneously. $\overline{WAIT}$ is normally inactive. For example, if the processor tries to perform an inappropriate data transfer such as write to the transmitter when the transmitter buffer is full, the $\overline{WAIT}$ output for the channel is active until the MPSC² is ready to accept the data. The $\overline{CS}$, C/$\overline{D}$, B/$\overline{A}$, $\overline{RD}$ and $\overline{WR}$ inputs must remain stable while $\overline{WAIT}$ is active. (Open drain)
12–19	D_0–D_7	Data Bus	I/O	The data bus lines are connected to the system data bus. Data or status from the MPSC² is output on these lines when $\overline{CS}$ and $\overline{RD}$ are active; data or commands are latched into the MPSC² on the rising edge of $\overline{WR}$ when $\overline{CS}$ is active. (Three-state)
20	V_{SS}	Ground		Ground.
21	$\overline{WR}$	Write	I	This input (with either $\overline{CS}$ during a read cycle or $\overline{HAI}$ during a DMA cycle) notifies the MPSC² to write data or control information to the device. (Active low)
22	$\overline{RD}$	Read	I	This input (with either $\overline{CS}$ during a read cycle or $\overline{HAI}$ during a DMA cycle) notifies the MPSC² to read data or status from the device. (Active low)
23	$\overline{CS}$	Chip Select	I	Chip select allows the MPSC² to transfer data or commands during a read or write cycle. (Active low)

Pin Identification

Pin No.	Pin Symbol	Pin Name	I/O	Description
24	C/$\overline{D}$	Control/Data Select	I	This input, with $\overline{RD}$, $\overline{WR}$, and B/$\overline{A}$ selects the data register (C/$\overline{D}$ = 0) or the control and status registers (C/$\overline{D}$ = 1) for access over the data bus.
25	B/$\overline{A}$	Channel Select	I	A low selects channel A and a high selects channel B for access during a read or write cycle.
26	$\overline{HAI}$	Hold Acknowledge In	I	This input notifies the MPSC² that the host processor has acknowledged the DMA request and has placed itself in the hold state. The MPSC² then performs a DMA cycle for the highest priority outstanding DMA request, if any. (Active low)
26 , 31	$\overline{DTRA}$, $\overline{DTRB}$	Data Terminal Ready	O	The $\overline{DTR}$ pins are general-purpose outputs which may be set or reset with commands to the MPSC² (Active low)
27*	$\overline{INTA}$	Interrupt Acknowledge	I	The processor generates two or three $\overline{INTA}$ pulses (depending on the processor type) to signal all peripheral devices that an interrupt acknowledge sequence is taking place. During the interrupt acknowledge sequence, the MPSC², if so programmed, places information on the data bus to vector the processor to the appropriate interrupt service location. (Active low)
28	$\overline{INT}$	Interrupt Request	O	$\overline{INT}$ is pulled low when an internal interrupt request is accepted. (Active low, open drain)
29	$\overline{PRI}$	Interrupt Priority In	I	This input informs the MPSC² that the highest priority device is requesting interrupt and is used with $\overline{PRO}$ to implement a priority resolution daisy chain when there is more than one interrupting device. The state of $\overline{PRI}$ and the programmed interrupt mode determine the MPSC²'s response to an interrupt acknowledge sequence. (Active low)
30	$\overline{PRO}$	Interrupt Priority Out	O	This output is active when $\overline{HAI}$ is active and the MPSC² is not requesting interrupt ($\overline{INT}$ is inactive). The active state informs the next lower priority device that there are no higher priority interrupt requests pending during an interrupt acknowledge sequence. (Active low)
31	$\overline{HAO}$	Hold Acknowledge Out	O	This output, with $\overline{HAI}$ implements a priority daisychain for multiple DMA devices. $\overline{HAO}$ is active when $\overline{HAI}$ is active and there are no DMA requests pending in the MPSC². (Active low)

© IC MASTER 1984

AC Characteristics
T_a = 0°C to +70°C; V_{CC} = +5V ± 10%

Parameter	Symbol	Limits Min	Typ	Max	Unit	Test Conditions
Clock Cycle	t_{CY}	200		4000	ns	
Clock High Width	t_{CH}	70		2000	ns	
Clock Low Width	t_{CL}	70		2000	ns	
Clock Rise Time	t_r	0		30	ns	
Clock Fall Time	t_f	0		30	ns	
Address Setup to RD	t_{AR}	0			ns	
Address Hold from RD	t_{RA}	0			ns	
RD Pulse Width	t_{RR}	200			ns	
Data Output Delay from Address	t_{AD}			140	ns	
Data Output Delay from RD	t_{RD}			140	ns	
Data Float Delay from RD	t_{DF}	0		70	ns	
Address Setup to WR	t_{AW}	0			ns	
Address Hold from WR	t_{WA}	0			ns	
WR Pulse Width	t_{WW}	200			ns	
Data Setup to WR	t_{DW}	130			ns	
Data Hold from WR	t_{WD}	0			ns	
PRO Delay from PRI	t_{PIPO}			100	ns	
PRO Delay from INTA	t_{IAPO}			200	ns	
PRI Setup to INTA	t_{PIN}	0			ns	
PRI Hold from INTA	t_{IP}	20			ns	
INTA Pulse Width	t_{II}	200			ns	
End of INTA to Next INTA	t_{IHIRL}	300			ns	
Data Output Delay from INTA	t_{ID}			140	ns	
Data Float Delay from INTA	t_{DF}	0		70	ns	
Request Hold from RD/WR	t_{CQ}			60	ns	
HAI Setup to RD/WR	t_{LR}	300			ns	
HAI Hold from RD/WR	t_{RL}	0			ns	
HAO Delay from HAI	t_{HIHO}			100	ns	
Data Clock Cycle	t_{DCY}	400			ns	RxC, TxC
Data Clock High Width	t_{DCH}	180			ns	RxC, TxC
Data Clock Low Width	t_{DCL}	180			ns	RxC, TxC
Tx Data Delay from TxC	t_{TD}			300	ns	x1 Mode
				1000		x16, 32, 64
Rx Data Setup to RxC	t_{DS}	0			ns	
Rx Data Hold from RxC	t_{DH}	140			ns	
INT Delay Time from Tx Data	t_{TID}			4–6	t_{CY}	
INT Delay Time from RxC	t_{IRD}			7–11	t_{CY}	
CTS, DCD, SYNC High Pulse Width	t_{PH}	200			ns	
CTS, DCD, SYNC Low Pulse Width	t_{PL}	200			ns	
External INT from CTS, DCD, SYNC	t_{IPD}			500	ns	
Recovery Time Between Controls	t_{RV}	300			ns	
WAIT Delay Time from Address	t_{CW}			80	ns	
SYNC Setup to RxC	t_{DRxC}			100	ns	

Notes: 1: $\overline{RESET}$ must be active for a minimum of one complete CLK cycle.
2: In all modes system clock rate must be 4.5 times data rate.

AC Waveform Measurement Points

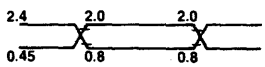

μPD7201A Target Specifications
Absolute Maximum Ratings

T_a = 25°C	
Power Supply, V_{CC}	−0.5V to +7.0V
Input Voltages, V_I	−0.5V to +7.0V
Output Voltages, V_O	−0.5V to +7.0V
Operating Temperature, T_{OPT}	0°C to +70°C
Storage Temperature, T_{STG}	−65°C to +125°C

*COMMENT: Exposing the device to stresses above those listed in Absolute Maximum Ratings could cause permanent damage. The device is not meant to be operated under conditions outside the limits described in the operational sections of this specification. Exposure to absolute maximum rating conditions for extended periods may affect device reliability.

DC Characteristics
T_a = 0°C to +70°C; V_{CC} = +5V ± 10%

Parameter	Symbol	Limits Min	Typ	Max	Unit	Test Conditions
Input Low Voltage	V_{IL}	−0.5		+0.8	V	
Input High Voltage	V_{IH}	+2.0		V_{CC} + 0.5	V	
Output Low Voltage	V_{OL}			+0.45	V	I_{OL} = +2.0mA
Output High Voltage	V_{OH}	+2.4			V	I_{OH} = 200μA
Input Leakage Current	I_{IL}			±10	μA	V_{IN} = V_{CC} to 0V
Output Leakage Current	I_{OL}			±10	μA	V_{OUT} = V_{CC} to 0V
V_{CC} Supply Current	I_{CC}			180	mA	

Capacitance
T_a = 25°C; V_{CC} = GND = 0V

Parameter	Symbol	Limits Min	Typ	Max	Unit	Test Conditions
Input Capacitance	C_{IN}			10	pF	fc = 1MHz Unmeasured pins returned to GND.
Output Capacitance	C_{OUT}			15	pF	
I/O Capacitance	C_{IO}			20	pF	

© IC MASTER 1984

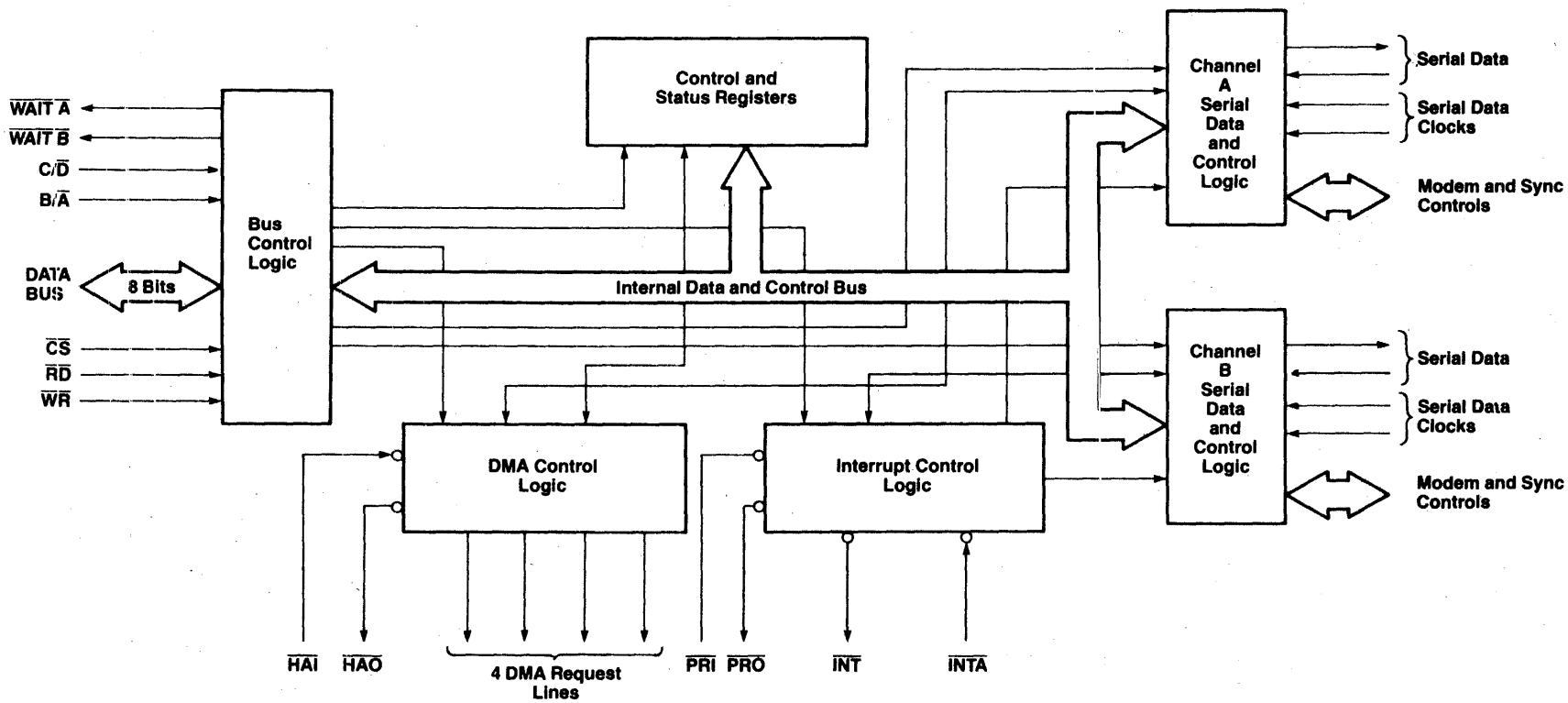
WAIT A
WAIT B
C/D
B/A
DATA BUS
8 Bits
CS
RD
WR
Bus Control Logic
Control and Status Registers
Internal Data and Control Bus
Channel A Serial Data and Control Logic
Serial Data
Serial Data Clocks
Modem and Sync Controls
Channel B Serial Data and Control Logic
Serial Data
Serial Data Clocks
Modem and Sync Controls
DMA Control Logic
Interrupt Control Logic
HAI
HAO
4 DMA Request Lines
PRI
PRO
INT
INTA

PRELIMINARY

μPD7210 INTELLIGENT GPIB INTERFACE CONTROLLER

DESCRIPTION

The μPD7210 TLC is an intelligent GPIB Interface Controller designed to meet all of the functional requirements for Talkers, Listeners, and Controllers as specified by the IEEE Standard 488-1978. Connected between a processor bus and the GPIB, the TLC provides high level management of the GPIB to unburden the processor and to simplify both hardware and software design. Fully compatible with most processor architectures, Bus Driver/Receivers are the only additional components required to implement any type of GPIB interface.

FEATURES

- All Functional Interface Capability Meeting IEEE Standard 488-1978
  - SH1 (Source Handshake)
  - AH1 (Acceptor Handshake)
  - T5 or TE5 (Talker or Extended Talker)
  - L3 or LE3 (Listener or Extended Listener)
  - SR1 (Service Request)
  - RL1 (Remote Local)
  - PP1 or PP2 ((Parallel Poll) (Remote or Local Configuration))
  - DC1 (Device Clear)
  - DT1 (Device Trigger)
  - C1-5 ((Controller) (All Functions))
- Programmable Data Transfer Rate
- 16 MPU Accessible Registers – 8 Read/8 Write
- 2 Address Registers
  - Detection of MTA, MLA, MSA (My Talk/Listen/Secondary Address)
  - 2 Device Addresses
- EOS Message Automatic Detection
- Command (IEEE Standard 488-78) Automatic Processing and Undefined Command Read Capability
- DMA Capability
- Programmable Bus Transceiver I/O Specification (Works with T.I./Motorola/Intel)
- 1 to 8 MHz Clock Range
- TTL Compatible
- N Channel MOS
- +5V Single Power Supply
- 40-Pin Plastic DIP
- 8080/85/86 Compatible

PIN CONFIGURATION

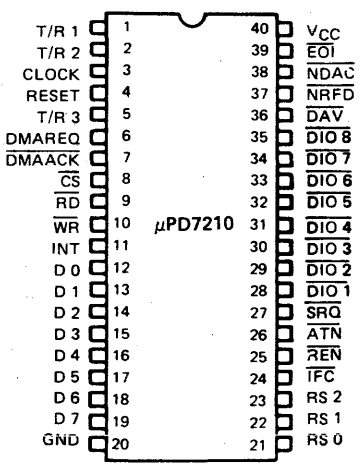

BLOCK DIAGRAM

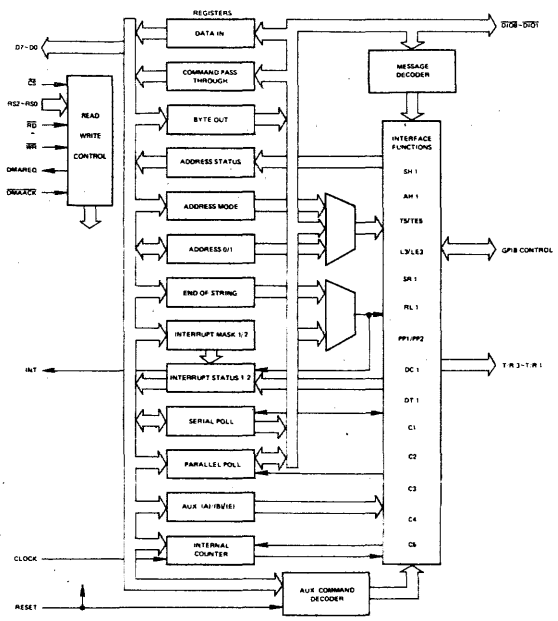

REV/2

© IC MASTER 1984

ABSOLUTE MAXIMUM RATINGS

(T_a = 25°C)

Parameter	Symbol	Test Conditions	Ratings	Unit
Supply Voltage	V_{CC}		−0.5 ~ + 7.0	V
Input Voltage	V_I		−0.5 ~ +7.0	V
Output Voltage	V_O		−0.5 ~ +7.0	V
Operating Temperature	T_{opt}		0 ~ +70	°C
Storage Temperature	T_{stg}		−65 ~ +125	°C

DC CHARACTERISTICS

(T_a = 0 ~ +70°C, V_{CC} = 5V ± 10%)

Parameter	Symbol	Test Conditions	Limits Min	Limits Typ	Limits Max	Unit
Input Low Voltage	V_{IL}		−0.5		+0.8	V
Input High Voltage	V_{IH}		+2.0		V_{CC} + 0.5	V
Low Level Output Voltage	V_{OL}	I_{OL} = 2 mA (4 mA : T/R1 Pin)			+0.45	V
High Level Output Voltage	V_{OH1}	I_{OH} = −400 μA (Except INT)	+2.4			V
High Level Output Voltage (INT Pin)	V_{OH2}	I_{OH} = −400 μA I_{OH} = −50 μA	+2.4 +3.5			V
Input Leakage Current	I_{IL}	V_{IN} = 0V ~ V_{CC}	−10		+10	μA
Output Leakage Current	I_{OL}	V_{OUT} = 0.45V ~ V_{CC}	−10		+10	μA
Supply Current	I_{CC}				+180	mA

CAPACITANCE

(T_a = 25°C, V_{CC} = GND = 0V)

Parameter	Symbol	Test Conditions	Limits Min	Limits Typ	Limits Max	Unit
Input Capacitance	C_{IN}	f = 1 MHz			10	pF
Output Capacitance	C_{OUT}	All Pins Except Pin Under Test Tied to AC Ground			15	pF
I/O Capacitance	$C_{I/O}$				20	pF

AC CHARACTERISTICS

(T_a = 0 ~ 70°C, V_{CC} = 5V ±10%)

Parameter	Symbol	Conditions	Limits Min	Limits Max	Unit
$\overline{EOI}$↓ → $\overline{DIO}$	t_{EODI}	PPSS → PPAS, ATN = True		250	ns
$\overline{EOI}$↓ → T/R1↑	t_{EOT11}	PPSS → PPAS, ATN = True		155	ns
$\overline{EOI}$↑ → T/R1↓	t_{EOT12}	PPAS → PPSS, ATN = False		200	ns
$\overline{ATN}$↓ → $\overline{NDAC}$↓	t_{ATND}	AIDS → ANRS, LIDS		155	ns
$\overline{ATN}$↓ → T/R1↓	t_{ATT1}	TACS + SPAS → TADS, CIDS		155	ns
$\overline{ATN}$↓ → T/R2↓	t_{ATT2}	TACS + SPAS → TADS, CIDS		200	ns
$\overline{DAV}$↓ → DMAREQ	t_{DVRQ}	ACRS → ACDS, LACS		600	ns
$\overline{DAV}$↓ → $\overline{NRFD}$↓	t_{DVNR1}	ACRS → ACDS		350	ns
$\overline{DAV}$↓ → $\overline{NDAC}$↑	t_{DVND1}	ACRS → ACDS → AWNS		650	ns
$\overline{DAV}$↑ → $\overline{NDAC}$↓	t_{DVND2}	AWNS → ANRS		350	ns
$\overline{DAV}$↑ → $\overline{NRFD}$↑	t_{DVNR2}	AWNS → ANRS → ACRS		350	ns
$\overline{RD}$↓ → $\overline{NRFD}$↑	t_{RNR}	ANRS → ACRS LACS, DI reg. selected		500	ns
$\overline{NDAC}$↑ → DMAREQ↑	t_{NDRQ}	STRS → SWNS → SGNS, TACS		400	ns
$\overline{NDAC}$↑ → $\overline{DAV}$↑	t_{NDDV}	STRS → SWNS → SGNS		350	ns
$\overline{WR}$↑ → $\overline{DIO}$	t_{WDI}	SGNS → SDYS, BO reg. selected		250	ns
$\overline{NRFD}$↑ → $\overline{DAV}$↓	t_{NRDV}	SDYS → STRS, T_1 = True		350	ns
$\overline{WR}$↑ → $\overline{DAV}$↓	t_{WDV}	SGNS → SDYS → STRS BO reg. selected, RFD = True N_F = fc = 8 MHz, T_1 (High Speed)		830 +t_{SYNC}	ns
TRIG Pulse Width	t_{TRIG}		50		ns

(T_a = 0 ~ 70°C, V_{CC} = 5V ± 10%)

Parameter	Symbol	Test Conditions	Limits Min	Limits Max	Unit
Address Setup to $\overline{RD}$	t_{AR}	RS0 ~ RS2	85		ns
		$\overline{CS}$	0		ns
Address Hold from $\overline{RD}$	t_{RA}		0		ns
$\overline{RD}$ Pulse Width	t_{RR}		170		ns
Data Delay from Address	t_{AD}			250	ns
Data Delay from $\overline{RD}$↓	t_{RD}			150	ns
Output Float Delay from $\overline{RD}$↑	t_{DF}		0	80	ns
$\overline{RD}$ Recovery Time	t_{RV}		250		ns
Address Setup to $\overline{WR}$	t_{AW}		0		ns
Address Hold from $\overline{WR}$	t_{WA}		0		ns
$\overline{WR}$ Pulse Width	t_{WW}		170		ns
Data Setup to $\overline{WR}$	t_{DW}		150		ns
Data Hold from $\overline{WR}$	t_{WD}		0		ns
$\overline{WR}$ Recovery Time	t_{RV}		250		ns
DMAREQ↓ Delay from $\overline{DMAACK}$	t_{AKRQ}			130	ns
Data Delay from $\overline{DMAACK}$	t_{AKD}			200	ns

© IC MASTER 1984

PIN IDENTIFICATION

PIN	NAME	I/O	DESCRIPTION
1	T/R1	O	Transmit/Receive Control – Input/Output Control Signal for the GPIB Bus Transceivers.
2	T/R2	O	Transmit/Receive Control – The functions of T/R2, T/R3 are determined by the values of TRM1, TRM0 of the address mode register.
3	CLK	I	Clock – (1-8 MHz) Reference Clock for generating the state change prohibit times T1, T6, T7, T9 specified in IEEE Standard 488-1978.
4	RST	I	Reset – Resets 7210 to an idle state when high (active high).
5	T/R3	O	Transmit/Receive Control – Function determined by TRM1 and TRM0 of address mode register (See T/R2).
6	DRQ	O	DMA Request – 7210 requests data transfer to the computer system, becomes low on input of DMA acknowledge signal $\overline{\text{DACK}}$.
7	$\overline{\text{DACK}}$	I	DMA Acknowledge – (Active Low) Signal connects the computer system data bus to the data register of the 7210.
8	$\overline{\text{CS}}$	I	Chip Select – (Active Low) Enables access to the register selected by RS0-2 (read or write operation).
9	$\overline{\text{RD}}$	I	Read – (Active Low) Places contents of read register specified by RS0-2 – on D0-7 (Computer Bus).
10	$\overline{\text{WR}}$	I	Write – (Active Low) writes data on D0-7 into the write register specified by RS0-2.
11	INT / $\overline{\text{INT}}$	O	Interrupt Request – (Active High/Low) Becomes active due to any 1 of 13 internal interrupt factors (unmasked) active state software configurable, active high on chip reset.
12-19	D0-7	I/O	Data Bus – 8-bit bidirectional data bus, for interface to computer system.
20	GND		Ground.
21-23	RS0-2	I	Register Select – These lines select one of eight read (write) registers during a read (write) operation.
24	$\overline{\text{IFC}}$	I/O	Interface Clear – Control line used for clearing the interface functions.
25	$\overline{\text{REN}}$	I/O	Remote Enable – Control line used to select remote or local control of the devices.
26	$\overline{\text{ATN}}$	I/O	Attention – Control line which indicates whether data on DIO lines is an interface message or device dependent message.
27	$\overline{\text{SRQ}}$	I/O	Service Request – Control line used to request the controller for service.
28-35	$\overline{\text{DIO1-8}}$	I/O	Data Input/Output – 8-bit bidirectional bus for transfer of message on the GPIB.
36	$\overline{\text{DAV}}$	I/O	Data Valid – Handshake line indicating that data on DIO lines is valid.
37	$\overline{\text{NRFD}}$	I/O	Ready for Data – Handshake line indicating that device is ready for data.
38	$\overline{\text{NDAC}}$	I/O	Data Accepted – Handshake line indicating completion of message reception.
39	$\overline{\text{EOI}}$	I/O	End or Identify – Control line used to indicate the end of multiple byte transfer sequence or to execute a parallel polling in conjunction with ATN.
40	V_{CC}		+5V DC – Technical Specifications: +5V; NMOS; 500 MW; 40 Pins; TTL Compatible; 1-8 MHz.

© IC MASTER 1984

μPD7220/GDC
μPD7220-1/μPD7220-2
GRAPHICS DISPLAY CONTROLLER

Description

The μPD7220 Graphics Display Controller (GDC) is an intelligent microprocessor peripheral designed to be the heart of a high-performance raster-scan computer graphics and character display system. Positioned between the video display memory and the microprocessor bus, the GDC performs the tasks needed to generate the raster display and manage the display memory. Processor software overhead is minimized by the GDC's sophisticated instruction set, graphics figure drawing, and DMA transfer capabilities. The display memory supported by the GDC can be configured in any number of formats and sizes up to 256K 16-bit words. The display can be zoomed and panned, while partitioned screen areas can be independently scrolled. With its light pen input and multiple controller capability, the GDC is ideal for advanced computer graphics applications.

For a more detailed description of the GDC's operation, please refer to the GDC Design Manual.

System Considerations

The GDC is designed to work with a general purpose microprocessor to implement a high-performance computer graphics system. Through the division of labor established by the GDC's design, each of the system components is used to the maximum extent through six-level hierarchy of simultaneous tasks. At the lowest level, the GDC generates the basic video raster timing, including sync and blanking signals. Partitioned areas on the screen and zooming are also accomplished at this level. At the next level, video display memory is modified during the figure drawing operations and data moves. Third, display memory addresses are calculated pixel by pixel as drawing progresses. Outside the GDC at the next level, preliminary calculations are done to prepare drawing parameters. At the fifth level, the picture must be represented as a list of graphics figures drawable by the GDC. Finally, this representation must be manipulated, stored, and communicated. By handling the first three levels, the GDC takes care of the high-speed and repetitive tasks required to implement a graphics system.

Features

- ☐ Microprocessor Interface
  - DMA transfers with 8257- or 8237-type controllers
  - FIFO Command Buffering
- ☐ Display Memory Interface
  - Up to 256K words of 16 bits
  - Read-Modify-Write (RMW) Display Memory cycles in under 800ns
  - Dynamic RAM refresh cycles for nonaccessed memory
- ☐ Light Pen Input
- ☐ External video synchronization mode
- ☐ Graphics Mode
  - Four megabit, bit-mapped display memory
- ☐ Character Mode
  - 8K character code and attributes display memory
- ☐ Mixed Graphics and Character Mode
  - 64K if all characters
  - 1 megapixel if all graphics
- ☐ Graphics Capabilities
  - Figure drawing of lines, arc/circles, rectangles, and graphics characters in 800ns per pixel
  - Display 1024-by-1024 pixels with 4 planes of color or grayscale
  - Two independently scrollable areas
- ☐ Character Capabilities
  - Auto cursor advance
  - Four independently scrollable areas
  - Programmable cursor height
  - Characters per row: up to 256
  - Character rows per screen: up to 100
- ☐ Video Display Format
  - Zoom magnification factors of 1 to 16
  - Panning
  - Command-settable video raster parameters
- ☐ Technology
  - Single +5 volt, NMOS, 40-pin DIP
- ☐ DMA Capability
  - Bytes or word transfers
  - 4 clock periods per byte transferred

Rev 4

© IC MASTER 1984

Pin Configuration

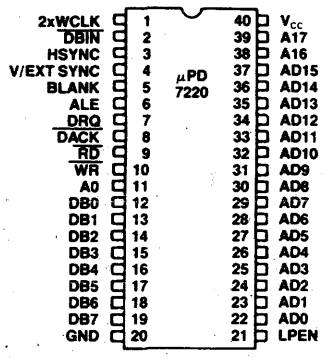

Pin Identification

Pin No.	Symbol	Direction	Function
1	2xWCLK	IN	Clock Input
2	$\overline{\text{DBIN}}$	OUT	Display Memory Read Input Flag
3	HSYNC	OUT	Horizontal Video Sync Output
4	V/EXT SYNC	IN/OUT	Vertical Video Sync Output or External VSYNC Input
5	BLANK	OUT	CRT Blanking Output
6	ALE ($\overline{\text{RAS}}$)	OUT	Address Latch Enable Output
7	DRQ	OUT	DMA Request Output
8	$\overline{\text{DACK}}$	IN	DMA Acknowledge Input
9	$\overline{\text{RD}}$	IN	Read Strobe Input for Microprocessor Interface
10	WR	IN	Write Strobe Input for Microprocessor Interface
11	A0	IN	Address Select Input for Microprocessor Interface
12-19	DB0 to 7	IN/OUT	Bidirectional Data Bus to Host Microprocessor
20	GND	—	Ground
21	LPEN	IN	Light Pen Detect Input
22-34	AD0 to 12	IN/OUT	Address and Data Lines to Display Memory
35-37	AD13 to 15	IN/OUT	Utilization Varies with Mode of Operation
38	A16	OUT	Utilization Varies with Mode of Operation
39	A17	OUT	Utilization Varies with Mode of Operation
40	V_{CC}	—	+ 5V ± 10%

Character Mode Pin Utilization

Pin No.	Name	Direction	Function
35-37	AD13 to 15	OUT	Line Counter Bits 0 to 2 Outputs
38	A16	OUT	Line Counter Bit 3 Output
39	A17	OUT	Cursor Output and Line Counter Bit 4*

Mixed Mode Pin Utilization

Pin No.	Name	Direction	Function
35-37	AD13 to 15	IN/OUT	Address and Data Bits 13 to 15
38	A16	OUT	Attribute Blink and Clear Line Counter* Output
39	A17	OUT	Cursor and Bit-Map Area* Flag Output

*Output 10 clock cycles after trailing edge of HSYNC. See figure for timing example.

Graphics Mode Pin Utilization

Pin No.	Name	Direction	Function
35-37	AD13 to 15	IN/OUT	Address and Data Bits 13 to 15
38	A16	OUT	Address Bit 16 Output
39	A17	OUT	Address Bit 17 Output

Block Diagram

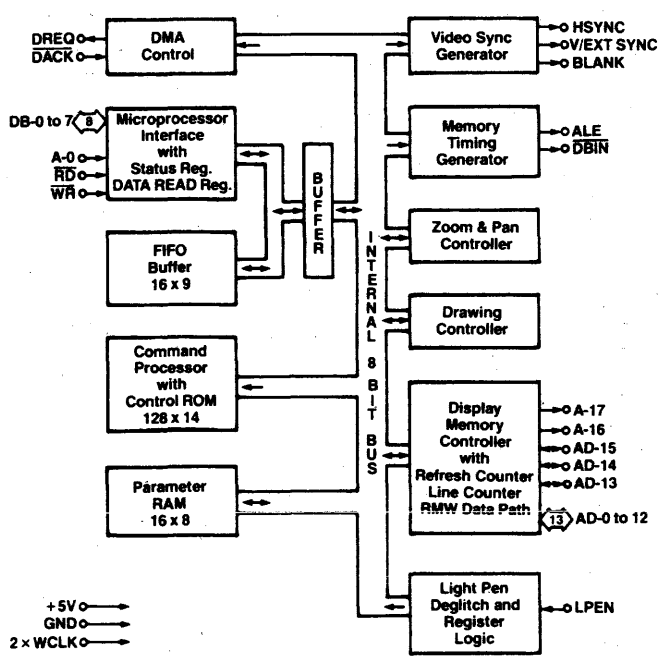

© IC MASTER 1984

Microprocessor Bus Interface

Control of the GDC by the system microprocessor is achieved through an 8-bit bidirectional interface. The status register is readable at any time. Access to the FIFO buffer is coordinated through flags in the status register and operates independently of the various internal GDC operations, due to the separate data bus connecting the interface and the FIFO buffer.

Command Processor

The contents of the FIFO are interpreted by the command processor. The command bytes are decoded, and the succeeding parameters are distributed to their proper destinations within the GDC. The command processor yields to the bus interface when both access the FIFO simultaneously.

DMA Control

The DMA control circuitry in the GDC coordinates transfers over the microprocessor interface when using an external DMA controller. The DMA Request and Acknowledge handshake lines directly interface with a μPD8257 or μPD8237 DMA controller, so that display data can be moved between the microprocessor memory and the display memory.

Parameter RAM

The 16-byte RAM stores parameters that are used repetitively during the display and drawing processes. In character mode, this RAM holds four sets of partitioned display area parameters; in graphics mode, the drawing pattern and graphics character take the place of two of the sets of parameters.

Video Sync Generator

Based on the clock input, the sync logic generates the raster timing signals for almost any interlaced, non-interlaced, or "repeat field" interlaced video format. The generator is programmed during the idle period following a reset. In video sync slave mode, it coordinates timing between multiple GDCs.

Memory Timing Generator

The memory timing circuitry provides two memory cycle types: a two-clock period refresh cycle and the read-modify-write (RMW) cycle which takes four clock periods. The memory control signals needed to drive the display memory devices are easily generated from the GDC's ALE and DBIN outputs.

Zoom & Pan Controller

Based on the programmable zoom display factor and the display area entries in the parameter RAM, the zoom and pan controller determines when to advance to the next memory address for display refresh and when to go on to the next display area. A horizontal zoom is produced by slowing down the display refresh rate while maintaining the video sync rates. Vertical zoom is accomplished by repeatedly accessing each line a number of times equal to the horizontal repeat. Once the line count for a display area is exhausted, the controller accesses the starting address and line count of the next display area from the parameter RAM. The system microprocessor, by modifying a display area starting address, can pan in any direction, independently of the other display areas.

Drawing Controller

The drawing processor contains the logic necessary to calculate the addresses and positions of the pixels of the various graphics figures. Given a starting point and the appropriate drawing parameters, the drawing controller needs no further assistance to complete the figure drawing.

Display Memory Controller

The display memory controller's tasks are numerous. Its primary purpose is to multiplex the address and data information in and out of the display memory. It also contains the 16-bit logic unit used to modify the display memory contents during RMW cycles, the character mode line counter, and the refresh counter for dynamic RAMs. The memory controller apportions the video field time between the various types of cycles.

Light Pen Deglitcher

Only if two rising edges on the light pen input occur at the same point during successive video fields are the pulses accepted as a valid light pen detection. A status bit indicates to the system microprocessor that the light pen register contains a valid address.

Programmer's View of GDC

The GDC occupies two addresses on the system microprocessor bus through which the GDC's status register and FIFO are accessed. Commands and parameters are written into the GDC's FIFO and are differentiated based on address bit A0. The status register or the FIFO can be read as selected by the address line.

A0	READ	WRITE
0	Status Register	Parameter Into FIFO
1	FIFO Read	Command Into FIFO

GDC Microprocessor Bus Interface Registers

Commands to the GDC take the form of a command byte followed by a series of parameter bytes as needed for specifying the details of the command. The command processor decodes the commands, unpacks the parameters, loads them into the appropriate registers within the GDC, and initiates the required operations.

The commands available in the GDC can be organized into five categories as described in the following section.

© IC MASTER 1984

GDC Command Summary

Video Control Commands

1. RESET — Resets the GDC to its idle state.
2. SYNC — Specifies the video display format.
3. VSYNC — Selects master or slave video synchronization mode.
4. CCHAR — Specifies the cursor and character row heights.

Display Control Commands

1. START — Ends Idle mode and unblanks the display.
2. BCTRL — Controls the blanking and unblanking of the display.
3. ZOOM — Specifies zoom factors for the display and graphics characters writing.
4. CURS — Sets the position of the cursor in display memory.
5. PRAM — Defines starting addresses and lengths of the display areas and specifies the eight bytes for the graphics character.
6. PITCH — Specifies the width of the X dimension of display memory.

Drawing Control Commands

1. WDAT — Writes data words or bytes into display memory.
2. MASK — Sets the mask register contents.
3. FIGS — Specifies the parameters for the drawing controller.
4. FIGD — Draws the figure as specified above.
5. GCHRD — Draws the graphics character into display memory.

Data Read Commands

1. RDAT: — Reads data words or bytes from display memory.
2. CURD: — Reads the cursor position.
3. LPRD: — Reads the light pen address.

DMA Control Commands

1. DMAR — Requests a DMA read transfer.
2. DMAW — Requests a DMA write transfer.

Status Register Flags

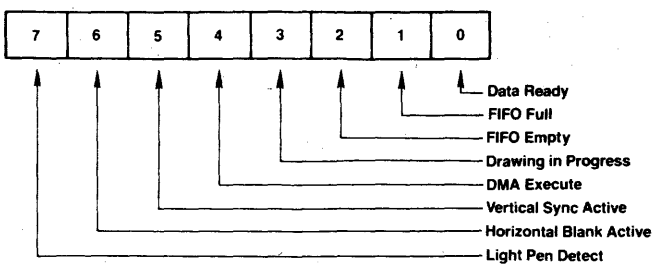

Status Register (SR)

SR-7: Light Pen Detect

When this bit is set to 1, the light pen address (LAD) register contains a deglitched value that the system microprocessor may read. This flag is reset after the 3-byte LAD is moved into the FIFO in response to the light pen read command.

SR-6: Horizontal Blanking Active

A 1 value for this flag signifies that horizontal retrace blanking is currently underway.

SR-5: Vertical Sync

Vertical retrace sync occurs while this flag is a 1. The vertical sync flag coordinates display format modifying commands to the blanked interval surrounding vertical sync. This eliminates display disturbances.

SR-4: DMA Execute

This bit is a 1 during DMA data transfers.

SR-3: Drawing in Progress

While the GDC is drawing a graphics figure, this status bit is a 1.

SR-2: FIFO Empty

This bit and the FIFO Full flag coordinate system microprocessor accesses with the GDC FIFO. When it is 1, the Empty flag ensures that all the commands and parameters previously sent to the GDC have been interpreted.

SR-1: FIFO Full

A 1 at this flag indicates a full FIFO in the GDC. A 0 ensures that there is room for at least one byte. This flag needs to be checked before each write into the GDC.

SR-0: Data Ready

When this flag is a 1, it indicates that a byte is available to be read by the system microprocessor. This bit must be tested before each read operation. It drops to a 0 while the data is transferred from the FIFO into the microprocessor interface data register.

FIFO Operation & Command Protocol

The first-in, first-out buffer (FIFO) in the GDC handles the command dialogue with the system microprocessor. This flow of information uses a half-duplex technique, in which the single 16-location FIFO is used for both directions of data movement, one direction at a time. The FIFO's direction is controlled by the system microprocessor through the GDC's command set. The host microprocessor coordinates these transfers by checking the appropriate status register bits.

The command protocol used by the GDC requires differentiation of the first byte of a command sequence from the succeeding bytes. The first byte contains the operation code and the remaining bytes carry parameters. Writing into the GDC causes the FIFO to store a flag value alongside the data byte to signify whether the byte was written into the command or the parameter address. The command processor in the GDC tests this bit as it interprets the entries in the FIFO.

The receipt of a command byte by the command processor marks the end of any previous operation. The number of parameter bytes supplied with a command is cut short by the receipt of the next command byte. A read operation from the GDC to the microprocessor can be terminated at any time by the next command.

The FIFO changes direction under the control of the system microprocessor. Commands written into the GDC always put the FIFO into write mode if it wasn't in it already.

© IC MASTER 1984

If it was in read mode, any read data in the FIFO at the time of the turnaround is lost. Commands which require a GDC response, such as RDAT, CURD and LPRD, put the FIFO into read mode after the command is interpreted by the GDC's command processor. Any commands and parameters behind the read-evoking command are discarded when the FIFO direction is reversed.

Read-Modify-Write Cycle

Data transfers between the GDC and the display memory are accomplished using a read-modify-write (RMW) memory cycle. The four clock period timing of the RMW cycle is used to: 1) output the address, 2) read data from the memory, 3) modify the data, and 4) write the modified data back into the initially selected memory address. This type of memory cycle is used for all interactions with display memory including DMA transfers, except for the two clock period display and RAM refresh cycles.

The operations performed during the modify portion of the RMW cycle merit additional explanation. The circuitry in the GDC uses three main elements: the Pattern register, the Mask register, and the 16-bit Logic Unit. The Pattern register holds the data pattern to be moved into memory. It is loaded by the WDAT parameters or, during drawing, from the parameter RAM. The Mask register contents determine which bits of the read data will be modified. Based on the contents of these registers, the Logic Unit performs the selected operations of REPLACE, COMPLEMENT, SET, or CLEAR on the data read from display memory.

The Pattern register contents are ANDed with the Mask register contents to enable the actual modification of the memory read data, on a bit-by-bit basis. For graphics drawing, one bit at a time from the Pattern register is combined with the Mask. When ANDed with the bit set to a 1 in the Mask register, the proper single pixel is modified by the Logic Unit. For the next pixel in the figure, the next bit in the Pattern register is selected and the Mask register bit is moved to identify the pixel's location within the word. The Execution word address pointer register, EAD, is also adjusted as required to address the word containing the next pixel.

In character mode, all of the bits in the Pattern register are used in parallel to form the respective bits of the modify data word. Since the bits of the character code word are used in parallel, unlike the one-bit-at-a-time graphics drawing process, this facility allows any or all of the bits in a memory word to be modified in one RMW memory cycle. The Mask register must be loaded with 1s in the positions where modification is to be permitted.

The Mask register can be loaded in either of two ways. In graphics mode, the CURS command contains a four-bit dAD field to specify the dot address. The command processor converts this parameter into the one-of-16 format used in the Mask register for figure drawing. A full 16 bits can be loaded into the Mask register using the MASK command. In addition to the character mode use mentioned above, the 16-bit MASK load is convenient in graphics mode when all of the pixels of a word are to be set to the same value.

The Logic Unit combines the data read from display memory, the Pattern Register, and the Mask register to generate the data to be written back into display memory. Any one of four operations can be selected: REPLACE, COMPLEMENT, CLEAR or SET. In each case, if the respective Mask bit is 0, that particular bit of the read data is returned to memory unmodified. If the Mask bit is 1, the modification is enabled. With the REPLACE operation, the Pattern Register data simply takes the place of the read data for modification enabled bits. For the other three operations, a 0 in the modify data allows the read data bit to be returned to memory. A 1 value causes the specified operation to be performed in the bit positions with set Mask bits.

Figure Drawing

The GDC draws graphics figures at the rate of one pixel per read-modify-write (RMW) display memory cycle. These cycles take four clock periods to complete. At a clock frequency of 5MHz, this is equal to 800ns. During the RMW cycle the GDC simultaneously calculates the address and position of the next pixel to be drawn.

The graphics figure drawing process depends on the display memory addressing structure. Groups of 16 horizontally adjacent pixels form the 16-bit words which are handled by the GDC. Display memory is organized as a linearly addressed space of these words. Addressing of individual pixels is handled by the GDC's internal RMW logic.

During the drawing process, the GDC finds the next pixel of the figure which is one of the eight nearest neighbors of the last pixel drawn. The GDC assigns each of these eight directions a number from 0 to 7, starting with straight down and proceeding counterclockwise.

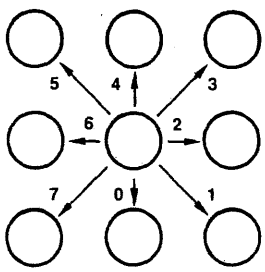

Drawing Directions

Figure drawing requires the proper manipulation of the address and the pixel bit position according to the drawing direction to determine the next pixel of the figure. To move to the word above or below the current one, it is necessary to subtract or add the number of words per line in display memory. This parameter is called the pitch. To move to the word to either side, the Execute word address cursor, EAD, must be incremented or decremented as the dot address pointer bit reaches the LSB or the MSB of the Mask register. To move to a pixel within the same word, it is necessary to rotate the dot address pointer register to the right or left.

© IC MASTER 1984

The table below summarizes these operations for each direction.

Dir	Operations to Address the Next Pixel
000	EAD + P → EAD
001	EAD + P → EAD dAD (MSB) = 1:EAD + 1 → EAD dAD → LR
010	dAD (MSB) = 1:EAD + 1 → EAD dAD → LR
011	EAD − P → EAD dAD (MSB) = 1:EAD + 1 → EAD dAD → LR
100	EAD − P → EAD
101	EAD − P → EAD dAD (LSB) = 1:EAD − 1 → EAD dAD → RR
110	dAD (LSB) = 1:EAD − 1 → EAD dAD → RR
111	EAD + P → EAD dAD (LSB) = 1:EAD − 1 → EAD dAD → RR

Where P = Pitch, LR = Left Rotate, RR = Right Rotate,
EAD = Execute Word Address, and
dAD = Dot Address stored in the Mask Register.

Whole word drawing is useful for filling areas in memory with a single value. By setting the Mask register to all 1s with the MASK command, both the LSB and MSB of the dAD will always be 1, so that the EAD value will be incremented or decremented for each cycle regardless of direction. One RMW cycle will be able to effect all 16 bits of the word for any drawing type. One bit in the Pattern register is used per RMW cycle to write all the bits of the word to the same value. The next Pattern bit is used for the word, etc.

For the various figures, the effect of the initial direction upon the resulting drawing is shown below:

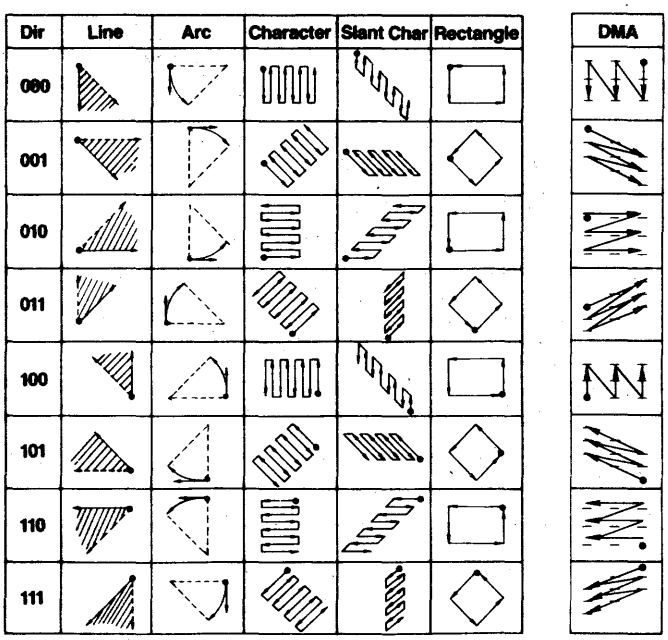

Note that during line drawing, the angle of the line may be anywhere within the shaded octant defined by the DIR value. Arc drawing starts in the direction initially specified by the DIR value and veers into an arc as drawing proceeds. An arc may be up to 45 degrees in length. DMA transfers are done on word boundaries only, and follow the arrows indicated in the table to find successive word addresses. The slanted paths for DMA transfers indicate the GDC changing both the X and Y components of the word address when moving to the next word. It does not follow a 45 degree diagonal path by pixels.

Drawing Parameters

In preparation for graphics figure drawing, the GDC's Drawing Processor needs the figure type, direction and drawing parameters, the starting pixel address, and the pattern from the microprocessor. Once these are in place within the GDC, the Figure Draw command, FIGD, initiates the drawing operation. From that point on, the system microprocessor is not involved in the drawing process. The GDC Drawing Controller coordinates the RMW circuitry and address registers to draw the specifed figure pixel by pixel.

The algorithms used by the processor for figure drawing are designed to optimize its drawing speed. To this end, the specific details about the figure to be drawn are reduced by the microprocessor to a form conducive to high-speed address calculations within the GDC. In this way the repetitive, pixel-by-pixel calculations can be done quickly, thereby minimizing the overall figure drawing time. The table below summarizes the parameters.

Drawing Type	DC	D	D2	D1	DM
Initial Value*	0	8	8	−1	−1
Line	$\lvert\Delta I\rvert$	$2\lvert\Delta D\rvert - \lvert\Delta I\rvert$	$2(\lvert\Delta D\rvert - \lvert\Delta I\rvert)$	$2\lvert\Delta D\rvert$	–
Arc**	$r\sin\phi$	$r-1$	$2(r-1)$	−1	$r\sin\theta\downarrow$
Rectangle	3	A−1	B−1	−1	A−1
Area Fill	B−1	A	A	–	–
Graphic Character***	B−1	A	A	–	–
Write Data	W−1	–	–	–	–
DMAW	D−1	C−1	–	–	–
DMAR	D−1	C−2	(C−2)/2†	–	–
Read Data	W	–	–	–	–

*Initial values for the various parameters remain as each drawing process ends.

**Circles are drawn with 8 arcs, each of which span 45°, so that $\sin\phi = 1/\sqrt{2}$ and $\sin\theta = 0$.

***Graphic characters are a special case of bit-map area filling in which B and A ≤ 8. If A = 8 there is no need to load D and D2.

Where:

−1 = all ONES value.

All numbers are shown in base 10 for convenience. The GDC accepts base 2 numbers (2s complement notation where appropriate).

– = No parameter bytes sent to GDC for this parameter.

ΔI = The larger at Δx or Δy.

ΔD = The smaller at Δx or Δy.

r = Radius of curvature, in pixels.

ϕ = Angle from major axis to end of the arc. $\phi \leq 45°$

θ = Angle from major axis to start of the arc. $\theta \leq 45°$

↑ = Round up to the next higher integer.

↓ = Round down to the next lower integer.

A = Number of pixels in the initially specified direction.

B = Number of pixels in the direction at right angles to the initially specified direction.

W = Number of words to be accessed.

C = Number of bytes to be transferred in the initially specified direction. (Two bytes per word if word transfer mode is selected.)

D = Number of words to be accessed in the direction at right angles to the initially specified direction.

DC = Drawing count parameter which is one less than the number of RMW cycles to be executed.

DM = Dots masked from drawing during arc drawing.

† = Needed only for word reads.

© IC MASTER 1984

Graphics Character Drawing

Graphics characters can be drawn into display memory pixel-by-pixel. The up to 8-by-8 character display is loaded into the GDC's parameter RAM by the system microprocessor. Consequently, there are no limitations on the character set used. By varying the drawing parameters and drawing direction, numerous drawing options are available. In area fill applications, a character can be written into display memory as many times as desired without reloading the parameter RAM.

Once the parameter RAM has been loaded with up to eight graphics character bytes by the appropriate PRAM command, the GCHRD command can be used to draw the bytes into display memory starting at the cursor. The zoom magnification factor for writing, set by the zoom command, controls the size of the character written into the display memory in integer multiples of 1 through 16. The bit values in the PRAM are repeated horizontally and vertically the number of times specified by the zoom factor.

The movement of these PRAM bytes to the display memory is controlled by the parameters of the FIGS command. Based on the specified height and width of the area to be drawn, the parameter RAM is scanned to fill the required area.

For an 8-by-8 graphics character, the first pixel drawn uses the LSB of RA-15, the second pixel uses bit 1 of RA-15, and so on, until the MSB of RA-15 is reached.

The GDC jumps to the corresponding bit in RA-14 to continue the drawing. The progression then advances toward the LSB of RA-14. This snaking sequence is continued for the other 6 PRAM bytes. This progression matches the sequence of display memory addresses calculated by the drawing processor as shown above. If the area is narrower than 8 pixels wide, the snaking will advance to the next PRAM byte before the MSB is reached. If the area is less than 8 lines high, fewer bytes in the parameter RAM will be scanned. If the area is larger than 8 by 8, the GDC will repeat the contents of the parameter RAM in two dimensions, as required to fill the area with the 8-by-8 mozaic. (Fractions of the 8-by-8 pattern will be used to fill areas which are not multiples of 8 by 8.)

Parameter RAM Contents: RAM Address RA 0 to 15

The parameters stored in the parameter RAM, PRAM, are available for the GDC to refer to repeatedly during figure drawing and raster-scanning. In each mode of operation the values in the PRAM are interpreted by the GDC in a predetermined fashion. The host microprocessor must load the appropriate parameters into the proper PRAM locations. PRAM loading command allows the host to write into any location of the PRAM and transfer as many bytes as desired. In this way any stored parameter byte or bytes may be changed without influencing the other bytes.

The PRAM stores two types of information. For specifying the details of the display area partitions, blocks of four bytes are used. The four parameters stored in each block include the starting address in display memory of each display area, and its length. In addition, there are two mode bits for each area which specify whether the area is a bit-mapped graphics area or a coded character area, and whether a 16-bit or a 32-bit wide display cycle is to be used for that area.

The other use for the PRAM contents is to supply the pattern for figure drawing when in a bit-mapped graphics area or mode. In these situations, PRAM bytes 8 through 16 are reserved for this patterning information. For line, arc, and rectangle drawing (linear figures) locations 8 and 9 are loaded into the Pattern Register to allow the GDC to draw dotted, dashed, etc. lines. For area filling and graphics bit-mapped character drawing locations 8 through 15 are referenced for the pattern or character to be drawn.

Details of the bit assignments are shown for the various modes of operation.

Character Mode

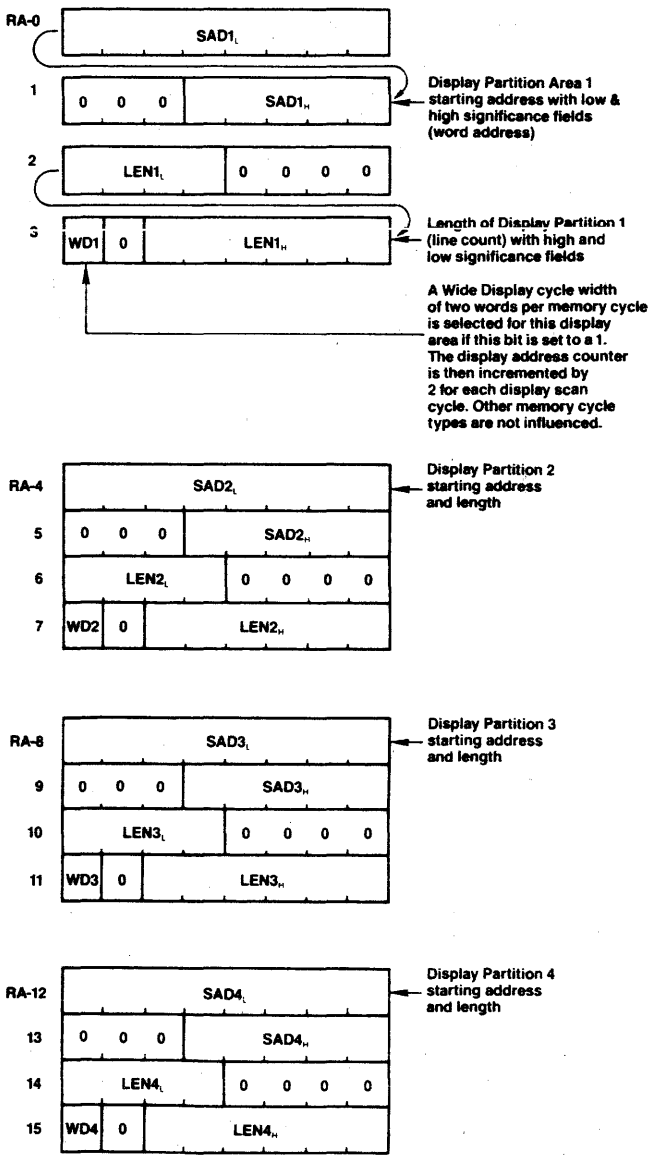

© IC MASTER 1984

Graphics and Mixed Graphics and Character Modes

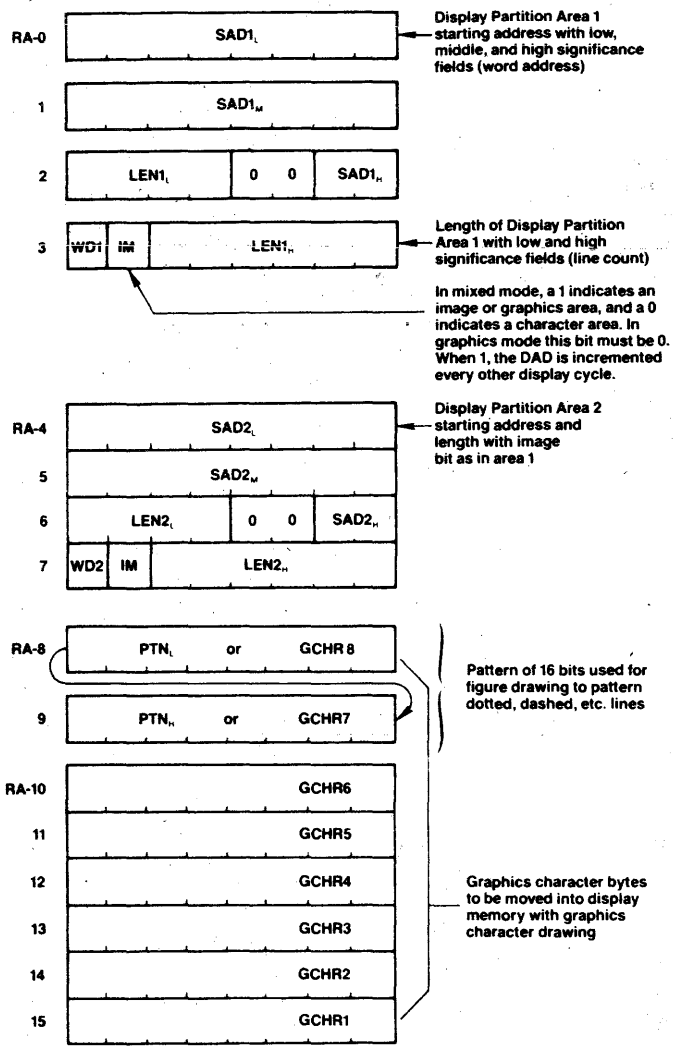

Command Bytes Summary

RESET	0	0	0	0	0	0	0	0
SYNC	0	0	0	0	1	1	1	DE
VSYNC	0	1	1	0	1	1	1	M
CCHAR	0	1	0	0	1	0	1	1
START	0	1	1	0	1	0	1	1
BCTRL	0	0	0	0	1	1	0	DE
ZOOM	0	1	0	0	0	1	1	0
CURS	0	1	0	0	1	0	0	1
PRAM	0	1	1	1	SA			
PITCH	0	1	0	0	0	1	1	1
WDAT	0	0	1	TYPE		0	MOD	
MASK	0	1	0	0	1	0	1	0
FIGS	0	1	0	0	1	1	0	0
FIGD	0	1	1	0	1	1	0	0
GCHRD	0	1	1	0	1	0	0	0
RDAT	1	0	1	TYPE		0	MOD	
CURD	1	1	1	0	0	0	0	0
LPRD	1	1	0	0	0	0	0	0
DMAR	1	0	1	TYPE		1	MOD	
DMAW	0	0	1	TYPE		1	MOD	

© IC MASTER 1984

Video Control Commands

Reset

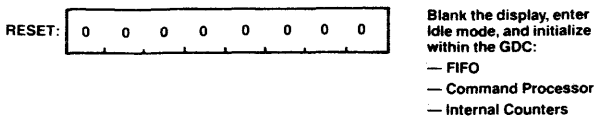

This command can be executed at any time and does not modify any of the parameters already loaded into the GDC.

If followed by parameter bytes, this command also sets the sync generator parameters as described below. Idle mode is exited with the START command.

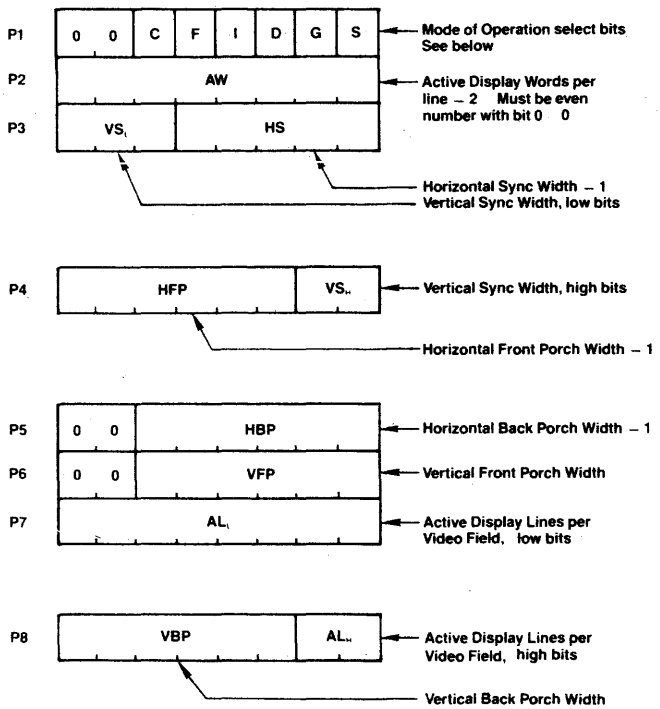

In graphics mode, a word is a group of 16 pixels. In character mode, a word is one character code and its attributes, if any. The number of active words per line must be an even number from 2 to 256. An all-zero parameter value selects a count equal to 2^n where n = number of bits in the parameter field for vertical parameters. All horizontal widths are counted in display words. All vertical intervals are counted in lines.

Horizontal Back Porch Constraints

1. In general:
   HBP ≥ 3 Display Word Cycles (6 clock cycles).
2. If the IMAGE or WD modes change within one video field:
   HBP ≥ 5 Display Word Cycles (10 clock cycles).
3. If interlace or mixed mode is used:
   HBP ≥ 5 Display Word Cycles (10 clock cycles).

Horizontal Front Porch Constraints

1. If the display ZOOM function is used at other than 1X:
   HFP ≥ 2 Display Word Cycles (4 clock cycles).
2. If the GDC is used in the video sync Slave mode:
   HFP ≥ 4 Display Word Cycles (8 clock cycles).
3. If the Light Pen is used:
   HFP ≥ 6 Display Word Cycles (12 clock cycles).
4. If interlace mode is used:
   HFP ≥ 3 Display Word Cycles (6 clock cycles).

Horizontal SYNC Constraints

1. If Interlaced display mode is used:
   HS ≥ 5 Display Word Cycles (10 clock cycles).

Modes of Operation Bits

C G	Display Mode
0 0	Mixed Graphics & Character
0 1	Graphics Mode
1 0	Character Mode
1 1	Invalid

I S	Video Framing
0 0	Noninterlaced
0 1	Invalid
1 0	Interlaced Repeat Field for Character Displays
1 1	Interlaced

Repeat Field Framing: 2 Field Sequence with ½ line offset between otherwise identical fields.

Interlaced Framing: 2 Field Sequence with ½ line offset. Each field displays alternate lines.

Noninterlaced Framing: 1 field brings all of the information to the screen.

Total scanned lines in interlace mode is odd. The sum of VFP + VS + VBP + AL should equal one less than the desired odd number of lines.

D	Dynamic RAM Refresh Cycles Enable
0	No Refresh — STATIC RAM
1	Refresh — Dynamic RAM

Dynamic RAM refresh is important when high display zoom factors or DMA are used in such a way that not all of the rows in the RAMs are regularly accessed during display raster generation and for otherwise inactive display memory.

F	Drawing Time Window
0	Drawing during active display time and retrace blanking
1	Drawing only during retrace blanking

Access to display memory can be limited to retrace blanking intervals only, so that no disruptions of the image are seen on the screen.

© IC MASTER 1984

AC Characteristics, μPD7220D

T_a = 0°C to 70°C; V_{CC} = 5.0V ± 10%; GND = 0V

Read Cycle (GDC ↔ CPU)

Parameter	Symbol	7220D Limits Min	7220D Limits Max	7220D-1 Limits Min	7220D-1 Limits Max	7220D-2 Limits Min	7220D-2 Limits Max	Unit	Test Conditions
Address Setup to RD ↓	t_{AR}	0		0		0		ns	
Address Hold from RD ↑	t_{RA}	0		0		0		ns	
RD Pulse Width	t_{RR1}	t_{RD1} + 20	t_{RCY} − ½ t_{CLK}	t_{RD1} + 20	t_{RCY} − ½ t_{CLK}	t_{RD1} + 20	t_{RCY} − ½ t_{CLK}	ns	
Data Delay from RD ↓	t_{RD1}		120		80		70	ns	C_L = 50 pF
Data Floating from RD ↑	t_{DF}	0	120	0	100	0	90	ns	
RD Pulse Cycle	t_{RCY}	4 t_{CLK}		4 t_{CLK}		4 t_{CLK}		ns	

Write Cycle (GDC ↔ CPU)

Parameter	Symbol	7220D Limits Min	7220D Limits Max	7220D-1 Limits Min	7220D-1 Limits Max	7220D-2 Limits Min	7220D-2 Limits Max	Unit	Test Conditions
Address Setup to WR ↓	t_{AW}	0		0		0		ns	
Address Hold from WR ↑	t_{WA}	0		0		10		ns	
WR Pulse Width	t_{WW}	120		100		90		ns	
Data Setup to WR ↑	t_{DW}	100		80		70		ns	
Data Hold from WR ↑	t_{WD}	10		10		10		ns	
WR Pulse Cycle	t_{WCY}	4 t_{CLK}		4 t_{CLK}		4 t_{CLK}		ns	

DMA Read Cycle (GDC ↔ CPU)

Parameter	Symbol	7220D Limits Min	7220D Limits Max	7220D-1 Limits Min	7220D-1 Limits Max	7220D-2 Limits Min	7220D-2 Limits Max	Unit	Test Conditions
DACK Setup to RD ↓	t_{KR}	0		0		0		ns	
DACK Hold from RD ↑	t_{RK}	0		0		0		ns	
RD Pulse Width	t_{RR2}	t_{RD2} + 20		t_{RD2} + 20		t_{RD2} + 20		ns	
Data Delay from RD ↓	t_{RD2}		1.5 t_{CLK} + 120		1.5 t_{CLK} + 80		1.5 t_{CLK} + 70	ns	C_L = 50 pF
DREQ Delay from 2XWCLK ↑	t_{REQ}		150		120		110	ns	C_L = 50 pF
DREQ Setup to DACK ↓	t_{QK}	0		0		0		ns	
DACK High Level Width	t_{DK}	t_{CLK}		t_{CLK}		t_{CLK}		ns	
DACK Pulse Cycle	t_E	4 t_{CLK}*		4 t_{CLK}*		4 t_{CLK}*		ns	
DREQ ↓ Delay from DACK ↓	$t_{KQ(R)}$		t_{CLK} + 150		t_{CLK} + 120		t_{CLK} + 110	ns	C_L = 50 pF

* for high byte and low byte transfers: t_E = 5 t_{CLK}

DMA Write Cycle (GDC ↔ CPU)

Parameter	Symbol	7220D Limits Min	7220D Limits Max	7220D-1 Limits Min	7220D-1 Limits Max	7220D-2 Limits Min	7220D-2 Limits Max	Unit	Test Conditions
DACK Setup to WR ↓	t_{KW}	0		0		0		ns	
DACK Hold from WR ↑	t_{WK}	0		0		0		ns	
DREQ ↓ Delay from DACK ↓	$t_{KQ(W)}$		t_{CLK} + 150		t_{CLK} + 120		t_{CLK} + 100	ns	C_L = 50 pF
WR Pulse Width	t_{WW}	120	3 t_{CLK}	100	3 t_{CLK}	90	3 t_{CLK}	ns	

R/M/W Cycle (GDC ↔ Display Memory)

Parameter	Symbol	7220D Limits Min	7220D Limits Max	7220D-1 Limits Min	7220D-1 Limits Max	7220D-2 Limits Min	7220D-2 Limits Max	Unit	Test Conditions
Address/ Data Delay from 2XWCLK ↑	t_{AD}	30	160	30	130	30	115	ns	C_L = 50 pF
Address/Data Floating from 2XWCLK ↑	t_{OFF}	30	160	30	130	30	115	ns	C_L = 50 pF
Input Data Setup to 2XWCLK ↓	t_{DIS}	0		0		0		ns	
Input Data Hold from 2XWCLK ↓	t_{DIH}	t_{DE} − 20		t_{DE} − 20		t_{DE} − 20		ns	
DBIN Delay from 2XWCLK ↓	t_{DE}	30	120	30	90	30	80	ns	C_L = 50 pF
ALE ↑ Delay from 2XWCLK ↑	t_{RR}	30	125	30	100	30	90	ns	C_L = 50 pF

© IC MASTER 1984

ALE ↓ Delay from 2XWCLK ↓	t_{RF}	30	100	30	80	30	70	ns	C_L = 50 pF
ALE Width	t_{RW}	⅓ t_{CLK}		⅓ t_{CLK}		⅓ t_{CLK}		ns	C_L = 50 pF
ALE Low Width	t_{RL}	t_{CLK} + 30		t_{CLK} + 30		t_{CLK} + 30		ns	

Display Cycle **(GDC ↔ Display Memory)**

Parameter	Symbol	7220D Limits Min	7220D Limits Max	7220D-1 Limits Min	7220D-1 Limits Max	7220D-2 Limits Min	7220D-2 Limits Max	Unit	Test Conditions
Video Signal Delay from 2XWCLK ↑	t_{VD}		150		120		100	ns	C_L = 50 pF

Input Cycle **(GDC ↔ Display Memory)**

Parameter	Symbol	7220D Limits Min	7220D Limits Max	7220D-1 Limits Min	7220D-1 Limits Max	7220D-2 Limits Min	7220D-2 Limits Max	Unit	Test Conditions
Input Signal Setup to 2XWCLK ↑	t_{PS}	30		20		15		ns	
Input Signal Width	t_{PW}	t_{CLK}		t_{CLK}		t_{CLK}		ns	

Clock **(2XWCLK)**

Parameter	Symbol	7220D Limits Min	7220D Limits Max	7220D-1 Limits Min	7220D-1 Limits Max	7220D-2 Limits Min	7220D-2 Limits Max	Unit	Test Conditions
Clock Rise Time	t_{CR}		20		20		20	ns	
Clock Fall Time	t_{CF}		20		20		20	ns	
Clock High Pulse Width	t_{CH}	105		80		70		ns	
Clock Low Pulse Width	t_{CL}	105		80		70		ns	
Clock Cycle	t_{CLK}	250	2000	200	2000	180	2000	ns	

DC Characteristics

T_a = 0°C to 70°C; V_{CC} = 5V ± 10%; GND = 0V

Parameter	Symbol	Limits Min	Limits Typ	Limits Max	Unit	Test Conditions
Input Low Voltage	V_{IL}	−0.5		0.8	V	①
Input High Voltage	V_{IH}	2.2		V_{CC} + 0.5	V	②
Output Low Voltage	V_{OL}			0.45	V	I_{OL} = 2.2 mA
Output High Voltage	V_{OH}	2.4			V	I_{OH} = −400 μA
Input Low Leak Current	I_{IL}			−10	μA	V_I = 0V
Input High Leak Current	I_{IH}			+10	μA	V_I = V_{CC}
Output Low Leak Current	I_{OL}			−10	μA	V_O = 0V
Output High Leak Current	I_{OH}			+10	μA	V_O = V_{CC}
Clock Input Low Voltage	V_{CL}	−0.5		0.6	V	
Clock Input High Voltage	V_{CH}	3.5		V_{CC} + 1.0	V	
V_{CC} Supply Current	I_{CC}			270	mA	

Capacitance

T_a = 25°C; V_{CC} = GND = 0V

Parameter	Symbol	Limits Min	Limits Typ	Limits Max	Unit	Test Conditions
Input Capacitance	C_{IN}			10	pF	fc = 1 MHz
I/O Capacitance	C_{IO}			20	pF	V_I (unmeasured) = 0V
Output Capacitance	C_{OUT}			20	pF	
Clock Input Capacitance	C_{ϕ}			20	pF	

Notes:
① For 2XWCLK, V_{IL} = −0.5V to +0.6V.
② For 2XWCLK, V_{IH} = +3.9V to V_{CC} +1.0V.

Absolute Maximum Ratings* (Tentative)

Ambient Temperature under Bias	0°C to 70°C
Storage Temperature	−65°C to 150°C
Voltage on Any Pin with Respect to Ground	−0.5V to +7V
Power Dissipation	1.5 W

*COMMENT: Exposing the device to stresses above those listed in Absolute Maximum Ratings could cause permanent damage. The device is not meant to be operated under conditions outside the limits described in the operational sections of this specification. Exposure to absolute maximum rating conditions for extended periods may affect device reliability.

© IC MASTER 1984

NEC
NEC Electronics

μPD765A/μPD7265 SINGLE/DOUBLE DENSITY FLOPPY DISK CONTROLLER

Description

The μPD765A is an LSI Floppy Disk Controller (FDC) chip which contains the circuitry and control functions for interfacing a processor to 4 floppy-disk drives. It is capable of supporting either IBM 3740 Single Density format (FM), or IBM System 34 Double Density format (MFM) including double-sided recording. The μPD765A provides control signals which simplify the design of an external phase locked loop and write precompensation circuitry. The FDC simplifies and handles most of the burdens associated with implementing a floppy-disk interface.

The μPD7265 is an addition to the FDC family that has been designed specifically for the Sony Micro Floppydisk® drive. The μPD7265 is pin-compatible and electrically equivalent to the 765A but utilizes the Sony recording format. The μPD7265 can read a diskette that has been formatted by the μPD765A.

Hand-shaking signals are provided in the μPD765A/μPD7265 which make DMA operation easy to incorporate with the aid of an external DMA Controller chip, such as the μPD8257. The FDC will operate in either the DMA or non-DMA mode. In the non-DMA mode the FDC generates interrupts to the processor every time a data byte is to be transferred. In the DMA mode, the processor need only load the command into the FDC and all data transfers occur under control of the FDC and DMA controllers.

There are 15 commands which the μPD765A/μPD7265 will execute. Each of these commands requires multiple 8-bit bytes to fully specify the operation which the processor wishes the FDC to perform. The following commands are available:

READ DATA	SCAN HIGH OR EQUAL	WRITE DELETED DATA
READ ID	SCAN LOW OR EQUAL	SEEK
SPECIFY	READ DELETED DATA	RECALIBRATE
READ TRACK	WRITE DATA	SENSE INTERRUPT STATUS
SCAN EQUAL	FORMAT TRACK	SENSE DRIVE STATUS

Features

Address Mark detection circuitry is internal to the FDC which simplifies the phase locked loop and read electronics. The track stepping rate, head load time, and head unload time are user-programmable. The μPD765A/μPD7265 offers additional features such as multitrack and multiside read and write commands and single and double density capabilities.

- ☐ Sony (EMCA) Compatible Recording Format (μPD7265)
- ☐ IBM-compatible Format (Single and Double Density) (μPD765A)
- ☐ Multisector and Multitrack Transfer Capability
- ☐ Drive Up to 4 Floppy or Micro Floppydisk® Drives
- ☐ Data Scan Capability—Will scan a single sector or an entire cylinder comparing byte-for-byte host memory and disk data
- ☐ Data Transfers in DMA or Non-DMA Mode
- ☐ Parallel Seek Operations on Up to Four Drives
- ☐ Compatible with μPD8080/85, μPD8086/88 and μPD780 (Z80™) Microprocessors
- ☐ Single Phase Clock (8 MHz)
- ☐ +5V Only
- ☐ 40-Pin Plastic Package

™Z80 is a registered trademark of Zilog Inc.
Micro Floppydisk® is a registered trademark of Sony Corporation.

Block Diagram

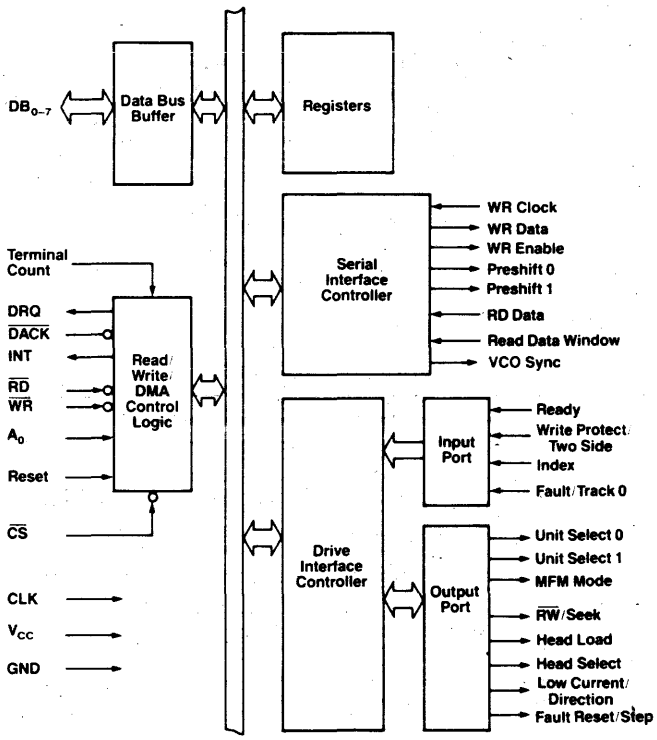

Absolute Maximum Ratings*

T_a = 25°C	
Operating Temperature	−10°C to +70°C
Storage Temperature	−40°C to +125°C
All Output Voltages	−0.5 to +7V
All Input Voltages	−0.5 to +7V
Supply Voltage V_{CC}	−0.5 to +7V
Power Dissipation	1W

*COMMENT: Exposing the device to stresses above those listed in Absolute Maximum Ratings could cause permanent damage. The device is not meant to be operated under conditions outside the limits described in the operational sections of this specification. Exposure to absolute maximum rating conditions for extended periods may affect device reliability.

Rev/1

© IC MASTER 1984

Pin Configuration

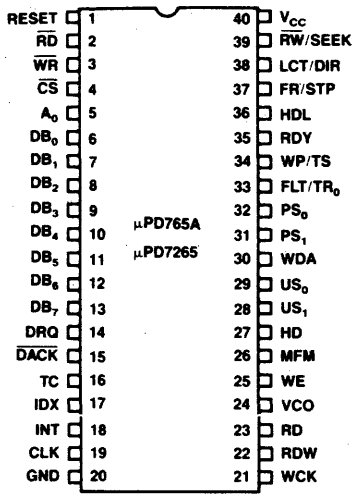

DC Characteristics

T_a = −10°C to +70°C;
V_{CC} = +5V ± 5% unless otherwise specified

Parameter	Symbol	Limits Min	Typ ①	Max	Unit	Test Conditions
Input Low Voltage	V_{IL}	−0.5		0.8	V	
Input High Voltage	V_{IH}	2.0		V_{CC} + 0.5	V	
Output Low Voltage	V_{OL}			0.45	V	I_{OL} = 2.0 mA
Output High Voltage	V_{OH}	2.4		V_{CC}	V	I_{OH} = −200 μA
Input Low Voltage (CLK + WR Clock)	$V_{IL}(\phi)$	−0.5		0.65	V	
Input High Voltage (CLK + WR Clock)	$V_{IH}(\phi)$	2.4		V_{CC} + 0.5	V	
V_{CC} Supply Current	I_{CC}			150	mA	
Input Load Current (All Input Pins)	I_{LI}			10	μA	V_{IN} = V_{CC}
				−10	μA	V_{IN} = 0V
High Level Output Leakage Current	I_{LOH}			10	μA	V_{OUT} = V_{CC}
Low Level Output Leakage Current	I_{LOL}			−10	μA	V_{OUT} = +0.45V

Note: ① Typical values for T_a = 25°C and nominal supply voltage.

Capacitance

T_a = 25°C; f_c = 1MHz; V_{CC} = 0V

Parameter	Symbol	Limits Min	Typ	Max	Unit	Test Conditions
Clock Input Capacitance	$C_{IN(\phi)}$			20	pF	All pins except pin under test tied to AC Ground
Input Capacitance	C_{IN}			10	pF	
Output Capacitance	C_{OUT}			20	pF	

Pin Identification

Pin No.	Symbol	Name	I/O	Connects To	Function
1	RST	Reset	I	Processor	Places FDC in idle state. Resets output lines to FDD to 0 (low). Does not affect SRT, HUT or HLT in Specify command. If RDY pin is held high during Reset, FDC will generate an interrupt within 1.024 msec. To clear this interrupt use Sense Interrupt Status command.
2	$\overline{RD}$	Read	I ①	Processor	Control signal for transfer of data from FDC to Data Bus, when 0 (low).
3	$\overline{WR}$	Write	I ①	Processor	Control signal for transfer of data to FDC via Data Bus, when 0 (low).
4	$\overline{CS}$	Chip Select	I	Processor	IC selected when 0 (low), allowing RD and WR to be enabled.
5	A_0	Data/Status Reg Select	I ①	Processor	Selects Data Reg (A_0 = 1) or Status Reg (A_0 = 0) contents of the FDC to be sent to Data Bus.
6–13	DB_0–DB_7	Data Bus	I/O ①	Processor	Bidirectional 8-bit Data Bus.
14	DRQ	Data DMA Request	O	DMA	DMA Request is being made by FDC when DRQ = 1.
15	$\overline{DACK}$	DMA Acknowledge	I	DMA	DMA cycle is active when 0 (low) and controller is performing DMA transfer.
16	TC	Terminal Count	I	DMA	Indicates the termination of a DMA transfer when 1 (high). It terminates data transfer during Read/Write/Scan command in DMA or Interrupt mode.
17	IDX	Index	I	FDD	Indicates the beginning of a disk track.
18	INT	Interrupt	O	Processor	Interrupt Request generated by FDC.
19	CLK	Clock	I		Single phase 8 MHz square-wave clock.
20	GND	Ground			DC power return.
21	WCK	Write Clock	I		Write data rate to FDD. FM = 500 KHz, MFM = 1 MHz, with a pulse width of 250 ns for both FM and MFM.
22	RDW	Read Data Window	I	Phase Lock Loop	Generated by PLL, and used to sample data from FDD.
23	RDD	Read Data	I	FDD	Read data from FDD, containing clock and data bits.
24	VCO/Sync	VCO/Sync	O	Phase Locked Loop	Inhibits VCO in PLL when 0 (low), enables VCO when 1.
25	WE	Write Enable	O	FDD	Enables write data into FDD.
26	MFM	MFM Mode	O	Phase Lock Loop	MFM mode when 1, FM mode when 0.
27	HD	Head Select	O	FDD	Head 1 selected when 1 (high), Head 0 selected when 0 (low).
28, 29	US_1, US_0	Unit Select	O	FDD	FDD Unit selected.
30	WDA	Write Data	O	FDD	Serial clock and data bits to FDD.
31, 32	PS_1, PS_0	Precompensation (preshift)	O	FDD	Write precompensation status during MFM mode. Determines early, late, and normal times.
33	FLT/TR_0	Fault/Track 0	I	FDD	Senses FDD fault condition in Read/Write mode; and Track 0 condition in Seek mode.
34	WP/TS	Write Protect Two Side	I	FDD	Senses Write Protect status in Read/Write mode; and Two-Side Media in Seek mode.
35	RDY	Ready	I	FDD	Indicates FDD is ready to send or receive data.
36	HDL	Head Load	O	FDD	Command which causes read write head in FDD to contact diskette.
37	FR/STP	Flt Reset Step	O	FDD	Resets fault FF in FDD in Read/Write mode, contains step pulses to move head to another cylinder in Seek mode.
38	LCT/DIR	Low Current Direction	O	FDD	Lowers Write current on inner tracks in Read/Write mode, determines direction head will step in Seek mode. A fault reset pulse is issued at the beginning of each Read or Write command prior to the occurrence of the Head Load signal.
39	$\overline{RW}$/SEEK	Read/Write Seek	O	FDD	When 1 (high) Seek mode selected and when 0 (low) Read/Write mode selected.
40	V_{CC}	+5V			DC power.

Note: ① Disabled when $\overline{CS}$ = 1

© IC MASTER 1984

AC Characteristics

T_a = −10°C to +70°C;
V_{CC} = +5V ±5% unless otherwise specified

Parameter	Symbol	Limits Min	Limits Typ ①	Limits Max	Unit	Test Conditions
Clock Period	ϕCY	120	125	500	ns	
			125			8" FDD
			250			5¼" FDD
			125			3½" Sony
Clock Active (High)	ϕ0	40			ns	
Clock Rise Time	ϕr			20	ns	
Clock Fall Time	ϕf			20	ns	
A_0, CS, DACK Setup Time to RD ↓	t_{AR}	0			ns	
A_0, CS, DACK Hold Time from RD ↑	t_{RA}	0			ns	
RD Width	t_{RR}	250			ns	
Data Access Time from RD ↓	t_{RD}			200	ns	C_L = 100 pf
DB to Float Delay Time from RD ↑	t_{DF}	20		100	ns	C_L = 100 pF
A_0, CS, DACK Setup Time to WR ↓	t_{AW}	0			ns	
A_0, CS, DACK Hold Time to WR ↑	t_{WA}	0			ns	
WR Width	t_{WW}	250			ns	
Data Setup Time to WR ↑	t_{DW}	150			ns	
Data Hold Time from WR ↑	t_{WD}	5			ns	
INT Delay Time from RD ↑	t_{RI}			500	ns	
INT Delay Time from WR ↑	t_{WI}			500	ns	
DRQ Cycle Time	t_{MCY}	13			μs	
DACK ↓ → DRQ ↓ Delay	t_{AM}			200	ns	
DRQ ↑ → DACK ↓ Delay	t_{MA}	200			ns	ϕ_{CY} = 125 ns
DACK Width	t_{AA}	2			ϕ_{CY}	
TC Width	t_{TC}	1			ϕCY	
Reset Width	t_{RST}	14			ϕCY	
WCK Cycle Time	t_{CY}		4		μs	MFM = 0 5¼"
			2			MFM = 1 5¼"
			2			MFM = 0 8"
			1			MFM = 1 8"
			2			MFM = 0 3½" ③
			1			MFM = 1 3½" ③
WCK Active Time (High)	t_0	80	250	350	ns	
WCK Rise Time	t_r			20	ns	
WCK Fall Time	t_f			20	ns	
Preshift Delay Time from WCK ↑	t_{CP}	20		100	ns	
WCK ↑ → WE ↑ Delay	t_{CWE}	20		100	ns	
WDA Delay Time from WCK ↑	t_{CD}	20		100	ns	
RDD Active Time (High)	t_{RDD}	40			ns	
Window Cycle Time	t_{WCY}		4		μs	MFM = 0 5¼"
			2			MFM = 1 5¼"
			2			MFM = 0 8"
			1			MFM = 1 8"
			2			MFM = 0 3½"
			1			MFM = 1 3½"
Window Hold Time to/from RDD	t_{RDW} t_{WRD}	15			ns	
$US_{0,1}$ Hold Time to RW SEEK ↑	t_{US}	12			μs	
RW/SEEK Hold Time to LOW CURRENT/DIRECTION ↑	t_{SD}	7			μs	
LOW CURRENT/DIRECTION Hold Time to FAULT RESET STEP ↑	t_{DST}	1.0			μs	
$US_{0,1}$ Hold Time from FAULT RESET STEP 1	t_{STU}	5.0			μs	8 MHz Clock Period ④
STEP Active Time (High)	t_{STP}	6	7	8	μs	④
STEP Cycle Time	t_{SC}	33	②	②	μs	④
FAULT RESET Active Time (High)	t_{FR}	8.0		10	μs	④
Write Data Width	t_{WDD}	T_0−50			ns	
$US_{0,1}$ Hold Time After SEEK	t_{SU}	15			μs	8 MHz Clock Period
Seek Hold Time from DIR	t_{DS}	30			μs	
DIR Hold Time after STEP	t_{STD}	24			μs	
Index Pulse Width	t_{IDX}	10			ϕCY	
RD ↓ Delay from DRQ	t_{MR}	800			μs	
WR ↓ Delay from DRQ	t_{MW}	250			μs	8 MHz Clock Period
WE or RD Response Time from DRQ ↑	t_{MRW}			12	μs	

Notes: ① Typical values for T_a = 25°C and nominal supply voltage.
② Under Software Control. The range is from 1 ms to 16 ms at 8 MHz clock period, and 2 to 32 ms at 4 MHz clock period.
③ Sony Micro Floppydisk™ 3½" drive.
④ Double these values for a 4 MHz clock period.

Timing Waveforms

Processor Read Operation

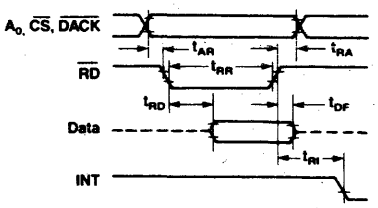

Processor Write Operation

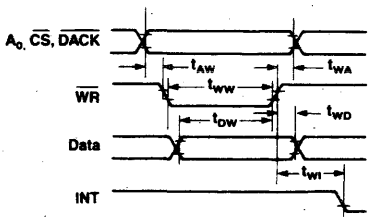

Clock

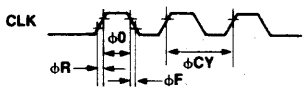

DMA Operation

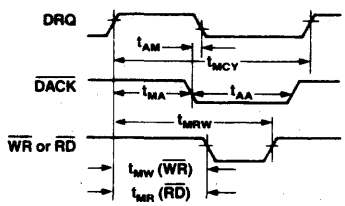

FDD Write Operation

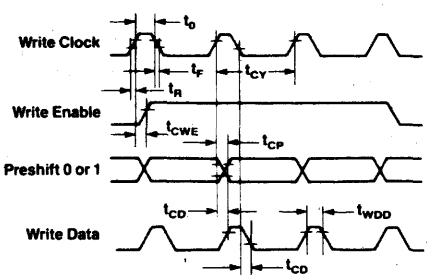

	Preshift 0	Preshift 1
Normal	0	0
Late	0	1
Early	1	0
Invalid	1	1

© IC MASTER 1984

Timing Waveforms (Cont.)

Seek Operation

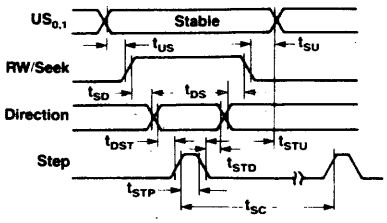

FLT Reset *Index*

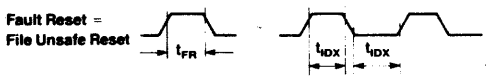

FDD Read Operation

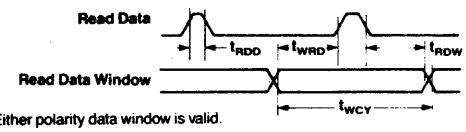

Note: Either polarity data window is valid.

Terminal Count *Reset*

Internal Registers

The μPD765A/μPD7265 contains two registers which may be accessed by the main system processor: a Status Register and a Data Register. The 8-bit Main Status Register contains the status information of the FDC, and may be accessed at any time. The 8-bit Data Register (which actually consists of several registers in a stack with only one register presented to the data bus at a time), stores data, commands, parameters, and FDD status information. Data bytes are read out of, or written into, the Data Register in order to program or obtain the results after a particular command. Only the Status Register may be read and used to facilitate the transfer of data between the processor and μPD765/μPD7265.

The relationship between the Status/Data registers and the signals $\overline{RD}$, $\overline{WR}$, and A_0 is shown below.

A_0	RD	WR	Function
0	0	1	Read Main Status Register
0	1	0	Illegal
0	0	0	Illegal
1	0	0	Illegal
1	0	1	Read from Data Register
1	1	0	Write into Data Register

Internal Registers (Cont.)

The bits in the Main Status Register are defined as follows:

Bit No.	Bit Name	Symbol	Description
DB_0	FDD 0 Busy	D_0B	FDD number 0 is in the Seek mode. If any of the bits is set FDC will not accept read or write command.
DB_1	FDD 1 Busy	D_1B	FDD number 1 is in the Seek mode. If any of the bits is set FDC will not accept read or write command.
DB_2	FDD 2 Busy	D_2B	FDD number 2 is in the Seek mode. If any of the bits is set FDC will not accept read or write command.
DB_3	FDD 3 Busy	D_3B	FDD number 3 is in the Seek mode. If any of the bits is set FDC will not accept read or write command.
DB_4	FDC Busy	CB	A read or write command is in process. FDC will not accept any other command.
DB_5	Execution Mode	EXM	This bit is set only during execution phase in non-DMA mode. When DB_5 goes low, execution phase has ended and result phase has started. It operates only during non-DMA mode of operation.
DB_6	Data Input/ Output	DIO	Indicates direction of data transfer between FDC and Data Register. If DIO = 1, then transfer is from Data Register to the processor. If DIO = 0, then transfer is from the processor to Data Register.
DB_7	Request for Master	RQM	Indicates Data Register is ready to send or receive data to or from the processor. Both bits DIO and RQM should be used to perform the hand-shaking functions of "ready" and "direction" to the processor.

The DIO and RQM bits in the Status Register indicate when data is ready and in which direction data will be transferred on the data bus. The maximum time between the last $\overline{RD}$ or $\overline{WR}$ during a command or result phase and DIO and RQM getting set or reset is 12 μs. For this reason every time the Main Status Register is read the CPU should wait 12 μs. The maximum time from the trailing edge of the last $\overline{RD}$ in the result phase to when DB_4 (FDC busy) goes low is 12 μs.

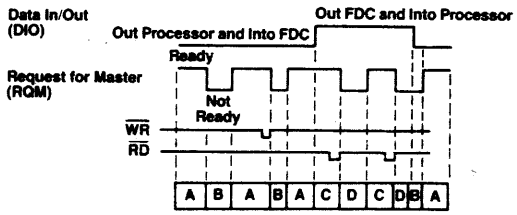

Notes: A — Data register ready to be written into by processor.
B — Data register not ready to be written into by processor.
C — Data register ready for next data byte to be read by processor.
D — Data register not ready to be read by processor.

© IC MASTER 1984

Status Register Identification

Bit No.	Name	Symbol	Description
			Status Register 0
D_7 D_6	Interrupt Code	IC	$D_7 = 0$ and $D_6 = 0$ Normal Termination of command, (NT). Command was completed and properly executed.
			$D_7 = 0$ and $D_6 = 1$ Abnormal Termination of command, (AT). Execution of command was started but was not successfully completed.
			$D_7 = 1$ and $D_6 = 0$ Invalid Command issue, (IC). Command which was issued was never started.
			$D_7 = 1$ and $D_6 = 1$ Abnormal Termination because during command execution the ready signal from FDD changed state.
D_5	Seek End	SE	When the FDC completes the SEEK command, this flag is set to 1 (high).
D_4	Equipment Check	EC	If a fault signal is received from the FDD, or if the Track 0 signal fails to occur after 77 step pulses (Recalibrate Command) then this flag is set.
D_3	Not Ready	NR	When the FDD is in the not-ready state and a read or write command is issued, this flag is set. If a read or write command is issued to Side 1 of a single-sided drive, then this flag is set.
D_2	Head Address	HD	This flag is used to indicate the state of the head at Interrupt.
D_1	Unit Select 1	US_1	These flags are used to indicate a Drive Unit Number at Interrupt.
D_0	Unit Select 0	US_0	
			Status Register 1
D_7	End of Cylinder	EN	When the FDC tries to access a sector beyond the final sector of a cylinder, this flag is set.
D_6			Not used. This bit is always 0 (low).
D_5	Data Error	DE	When the FDC detects a CRC① error in either the ID field or the data field, this flag is set.
D_4	Overrun	OR	If the FDC is not serviced by the host system during data transfers within a certain time interval, this flag is set.
D_3			Not used. This bit always 0 (low).
D_2	No Data	ND	During execution of READ DATA, WRITE DELETED DATA or SCAN command, if the FDC cannot find the sector specified in the IDR② Register, this flag is set.
			During execution of the READ ID command, if the FDC cannot read the ID field without an error, then this flag is set.
			During execution of the READ A cylinder command, if the starting sector cannot be found, then this flag is set.
D_1	Not Writable	NW	During execution of WRITE DATA, WRITE DELETED DATA or Format A cylinder command, if the FDC detects a write protect signal from the FDD, then this flag is set.
D_0	Missing Address Mark	MA	If the FDC cannot detect the ID Address Mark after encountering the index hole twice, then this flag is set.
			If the FDC cannot detect the Data Address Mark or Deleted Data Address Mark, this flag is set. Also at the same time, the MD (Missing Address Mark in data field) of Status Register 2 is set.
			Status Register 2
D_7			Not used. This bit is always 0 (low).
D_6	Control Mark	CM	During execution of the READ DATA or SCAN command, if the FDC encounters a sector which contains a Deleted Data Address Mark, this flag is set.
D_5	Data Error in Data Field	DD	If the FDC detects a CRC error in the data field then this flag is set.
D_4	Wrong Cylinder	WC	This bit is related to the ND bit, and when the contents of C③ on the medium is different from that stored in the IDR, this flag is set.
D_3	Scan Equal Hit	SH	During execution of the SCAN command, if the condition of "equal" is satisfied, this flag is set.
D_2	Scan Not Satisfied	SN	During execution of the SCAN command, if the FDC cannot find a sector on the cylinder which meets the condition, then this flag is set.
D_1	Bad Cylinder	BC	This bit is related to the ND bit, and when the contents of C on the medium is different from that stored in the IDR and the contents of C is $FF_{(16)}$, then this flag is set.
D_0	Missing Address Mark in Data Field	MD	When data is read from the medium, if the FDC cannot find a Data Address Mark or Deleted Data Address Mark, then this flag is set.

Status Register Identification (Cont.)

Bit No.	Name	Symbol	Description
			Status Register 3
D_7	Fault	FT	This bit is used to indicate the status of the Fault signal from the FDD.
D_6	Write Protected	WP	This bit is used to indicate the status of the Write Protected signal from the FDD.
D_5	Ready	RY	This bit is used to indicate the status of the Ready signal from the FDD.
D_4	Track 0	T0	This bit is used to indicate the status of the Track 0 signal from the FDD.
D_3	Two Side	TS	This bit is used to indicate the status of the Two Side signal from the FDD.
D_2	Head Address	HD	This bit is used to indicate the status of the Side Select signal to the FDD.
D_1	Unit Select 1	US_1	This bit is used to indicate the status of the Unit Select 1 signal to the FDD.
D_0	Unit Select 0	US_0	This bit is used to indicate the status of the Unit Select 0 signal to the FDD.

Notes: ① CRC = Cyclic Redundancy Check
② IDR = Internal Data Register
③ Cylinder (C) is described more fully in the Command Symbol Descripton on page 7.

Command Sequence

The μPD765A/μPD7265 is capable of performing 15 different commands. Each command is initiated by a multibyte transfer from the processor, and the result after execution of the command may also be a multibyte transfer back to the processor. Because of this multibyte interchange of information between the μPD765A/μPD7265 and the processor, it is convenient to consider each command as consisting of three phases:

Command Phase:	The FDC receives all information required to perform a particular operation from the processor.
Execution Phase:	The FDC performs the operation it was instructed to do.
Result Phase:	After completion of the operation, status and other housekeeping information are made available to the processor.

Following are shown the required preset parameters and results for each command. Most commands require 9 command bytes and return 7 bytes during the result phase. The "W" to the left of each byte indicates a command phase byte to be written, and an "R" indicates a result byte.

Instruction Set ① ②

Phase	R/W	Data Bus D_7	D_6	D_5	D_4	D_3	D_2	D_1	D_0	Remarks
Read Data										
Command	W	MT	MF	SK	0	0	1	1	0	Command Codes
	W	X	X	X	X	X	HD	US_1	US_0	③
	W	←			C				→	Sector ID information prior
	W	←			H				→	to command execution. The
	W	←			R				→	4 bytes are commanded
	W	←			N				→	against header on Floppy
	W	←			EOT				→	Disk.
	W	←			GPL				→	
	W	←			DTL				→	
Execution										Data transfer between the FDD and main system
Result	R	←			ST 0				→	Status information after
	R	←			ST 1				→	command execution
	R	←			ST 2				→	
	R	←			C				→	Sector ID information after
	R	←			H				→	command execution
	R	←			R				→	
	R	←			N				→	
Read Deleted Data										
Command	W	MT	MF	SK	0	1	1	0	0	Command Codes
	W	X	X	X	X	X	HD	US_1	US_0	
	W	←			C				→	Sector ID information prior
	W	←			H				→	to command execution. The
	W	←			R				→	4 bytes are commanded
	W	←			N				→	against header on Floppy
	W	←			EOT				→	Disk.
	W	←			GPL				→	
	W	←			DTL				→	
Execution										Data transfer between the FDD and main system
Result	R	←			ST 0				→	Status information after
	R	←			ST 1				→	command execution
	R	←			ST 2				→	
	R	←			C				→	Sector ID information after
	R	←			H				→	command execution
	R	←			R				→	
	R	←			N				→	
Write Data										
Command	W	MT	MF	0	0	0	1	0	1	Command Codes
	W	X	X	X	X	X	HD	US_1	US_0	
	W	←			C				→	Sector ID information prior
	W	←			H				→	to command execution. The
	W	←			R				→	4 bytes are commanded
	W	←			N				→	against header on Floppy
	W	←			EOT				→	Disk.
	W	←			GPL				→	
	W	←			DTL				→	
Execution										Data transfer between the main system and FDD
Result	R	←			ST 0				→	Status information after
	R	←			ST 1				→	command execution
	R	←			ST 2				→	
	R	←			C				→	Sector ID information after
	R	←			H				→	command execution
	R	←			R				→	
	R	←			N				→	

Notes: ① Symbols used in this table are described at the end of this section.
② A_0 should equal binary 1 for all operations.
③ X = Don't care, usually made to equal binary 0.

Instruction Set

Phase	R/W	Data Bus D_7	D_6	D_5	D_4	D_3	D_2	D_1	D_0	Remarks
Write Deleted Data										
Command	W	MT	MF	0	0	1	0	0	1	Command Codes
	W	X	X	X	X	X	HD	US_1	US_0	
	W	←			C				→	Sector ID information prior
	W	←			H				→	to command execution. The
	W	←			R				→	4 bytes are commanded
	W	←			N				→	against header on Floppy
	W	←			EOT				→	Disk.
	W	←			GPL				→	
	W	←			DTL				→	
Execution										Data transfer between the FDD and main system
Result	R	←			ST 0				→	Status information after
	R	←			ST 1				→	command execution
	R	←			ST 2				→	
	R	←			C				→	Sector ID information after
	R	←			H				→	command execution
	R	←			R				→	
	R	←			N				→	
Read A Track										
Command	W	0	MF	SK	0	0	0	1	0	Command Codes
	W	X	X	X	X	X	HD	US_1	US_0	
	W	←			C				→	Sector ID information prior
	W	←			H				→	to command execution
	W	←			R				→	
	W	←			N				→	
	W	←			EOT				→	
	W	←			GPL				→	
	W	←			DTL				→	
Execution										Data transfer between the FDD and main system. FDC reads all data fields from index hole to EOT.
Result	R	←			ST 0				→	Status information after
	R	←			ST 1				→	command execution
	R	←			ST 2				→	
	R	←			C				→	Sector ID information after
	R	←			H				→	command execution
	R	←			R				→	
	R	←			N				→	
Read ID										
Command	W	0	MF	0	0	1	0	1	0	Command Codes
	W	X	X	X	X	X	HD	US_1	US_0	
Execution										The first correct ID information on the cylinder is stored in Data Register.
Result	R	←			ST 0				→	Status information after
	R	←			ST 1				→	command execution
	R	←			ST 2				→	
	R	←			C				→	Sector ID information read
	R	←			H				→	during Execution phase from
	R	←			R				→	Floppy Disk.
	R	←			N				→	
Format A Track										
Command	W	0	MF	0	0	1	1	0	1	Command Codes
	W	X	X	X	X	X	HD	US_1	US_0	
	W	←			N				→	Bytes/Sector
	W	←			SC				→	Sectors/Track
	W	←			GPL				→	Gap 3
	W	←			D				→	Filler byte
Execution										FDC formats an entire track.
Result	R	←			ST 0				→	Status information after
	R	←			ST 1				→	command execution
	R	←			ST 2				→	
	R	←			C				→	In this case, the ID
	R	←			H				→	information has no meaning.
	R	←			R				→	
	R	←			N				→	
Scan Equal										
Command	W	MT	MF	SK	1	0	0	0	1	Command Codes
	W	X	X	X	X	X	HD	US_1	US_0	
	W	←			C				→	Sector ID information prior
	W	←			H				→	to command execution
	W	←			R				→	
	W	←			N				→	
	W	←			EOT				→	
	W	←			GPL				→	
	W	←			STP				→	
Execution										Data compared between the FDD and main system
Result	R	←			ST 0				→	Status information after
	R	←			ST 1				→	command execution
	R	←			ST 2				→	
	R	←			C				→	Sector ID information after
	R	←			H				→	command execution
	R	←			R				→	
	R	←			N				→	

© IC MASTER 1984

Instruction Set

Phase	R/W	Data Bus D_7	D_6	D_5	D_4	D_3	D_2	D_1	D_0	Remarks
Scan Low or Equal										
Command	W	MT	MF	SK	1	1	0	0	1	Command Codes
	W	X	X	X	X	X	HD	US_1	US_0	
	W	←			C				→	Sector ID information prior to command execution
	W	←			H				→	
	W	←			R				→	
	W	←			N				→	
	W	←			EOT				→	
	W	←			GPL				→	
	W	←			STP				→	
Execution										Data compared between the FDD and main system
Result	R	←			ST 0				→	Status information after command execution
	R	←			ST 1				→	
	R	←			ST 2				→	
	R	←			C				→	Sector ID information after command execution
	R	←			H				→	
	R	←			R				→	
	R	←			N				→	
Scan High or Equal										
Command	W	MT	MF	SK	1	1	1	0	1	Command Codes
	W	X	X	X	X	X	HD	US_1	US_0	
	W	←			C				→	Sector ID information prior to command execution
	W	←			H				→	
	W	←			R				→	
	W	←			N				→	
	W	←			EOT				→	
	W	←			GPL				→	
	W	←			STP				→	
Execution										Data compared between the FDD and main system
Result	R	←			ST 0				→	Status information after command execution
	R	←			ST 1				→	
	R	←			ST 2				→	
	R	←			C				→	Sector ID information after command execution
	R	←			H				→	
	R	←			R				→	
	R	←			N				→	
Recalibrate										
Command	W	0	0	0	0	0	1	1	1	Command Codes
	W	X	X	X	X	X	0	US_1	US_0	
Execution										Head retracted to Track 0
Sense Interrupt Status										
Command	W	0	0	0	0	1	0	0	0	Command Codes
Result	R	←			STO				→	Status information about the FDC at the end of seek operation
	R	←			PCN				→	
Specify										
Command	W	0	0	0	0	0	0	1	1	Command Codes
	W	←	SRT		→	←		HUT	→	
	W	←		HLT		→	←		ND	
Sense Drive Status										
Command	W	0	0	0	0	0	1	0	0	Command Codes
	W	X	X	X	X	X	HD	US_1	US_0	
Result	R	←			ST 3				→	Status information about FDD
Seek										
Command	W	0	0	0	0	1	1	1	1	Command Codes
	W	X	X	X	X	X	HD	US_1	US_0	
	W	←			NCN				→	
Execution										Head is positioned over proper cylinder on diskette.
Invalid										
Command	W	←			Invalid Codes				→	Invalid Command Codes (NoOp — FDC goes into Standby state.)
Result	R	←			ST 0				→	ST 0 = $80_{(16)}$

Command Symbol Description

Symbol	Name	Description
A_0	Address Line 0	A_0 controls selection of Main Status Register (A_0 = 0) or Data Register (A_0 = 1)
C	Cylinder Number	C stands for the current/selected cylinder (track) numbers 0 through 76 of the medium.
D	Data	D stands for the data pattern which is going to be written into a sector.
D_7–D_0	Data Bus	8-bit Data Bus, where D_7 stands for a most significant bit, and D_0 stands for a least significant bit.
DTL	Data Length	When N is defined as 00, DTL stands for the data length which users are going to read out or write into the sector.
EOT	End of Track	EOT stands for the final sector number on a cylinder. During Read or Write operations, FDC will stop data transfer after a sector number equal to EOT.
GPL	Gap Length	GPL stands for the length of Gap 3. During Read/Write commands this value determines the number of bytes that VCO Sync will stay low after two CRC bytes. During Format command it determines the size of Gap 3.
H	Head Address	H stands for head number 0 or 1, as specified in ID field.
HD	Head	HD stands for a selected head number 0 or 1 and controls the polarity of pin 27. (H = HD in all command words.)
HLT	Head Load Time	HLT stands for the head load time in the FDD (2 to 254 ms in 2 ms increments).
HUT	Head Unload Time	HUT stands for the head unload time after a Read or Write operation has occurred (16 to 240 ms in 16 ms increments).
MF	FM or MFM Mode	If MF is low, FM mode is selected, and if it is high, MFM mode is selected.
MT	Multitrack	If MT is high, a Multitrack operation is performed. If MT = 1 after finishing Read/Write operation on side 0, FDC will automatically start searching for sector 1 on side 1.
N	Number	N stands for the Number of data bytes written in a sector.
NCN	New Cylinder Number	NCN stands for a New Cylinder Number which is going to be reached as a result of the Seek operation. desired position of head.
ND	Non-DMA Mode	ND stands for operation in the Non-DMA mode.
PCN	Present Cylinder Number	PCN stands for the cylinder number at the completion of Sense Interrupt Status command. position of Head at present time.
R	Record	R stands for the sector number which will be read or written.
R/W	Read/Write	R/W stands for either Read (R) or Write (W) signal.
SC	Sector	SC indicates the number of Sectors per Cylinder.
SK	Skip	SK stands for Skip Deleted Data Address mark.
SRT	Step Rate Time	SRT stands for the Stepping Rate for the FDD (1 to 16 ms in 1 ms increments). Stepping Rate applies to all drives ($F_{(16)}$ = 1 ms, $E_{(16)}$ = 2 ms, etc.).
ST0 ST1 ST2 ST3	Status 0 Status 1 Status 2 Status 3	ST 0–3 stands for one of four registers which store the status information after a command has been executed. This information is available during the result phase after command execution. These registers should not be confused with the main status register (selected by A_0 = 0). ST 0–3 may be read only after a command has been executed and contains information relevant to that particular command.
STP		During a Scan operation, if STP = 1, the data in contiguous sectors is compared byte by byte with data sent from the processor (or DMA); and if STP = 2, then alternate sectors are read and compared.
US_0, US_1	Unit Select	US stands for a selected drive number 0 or 1.

© IC MASTER 1984

System Configuration

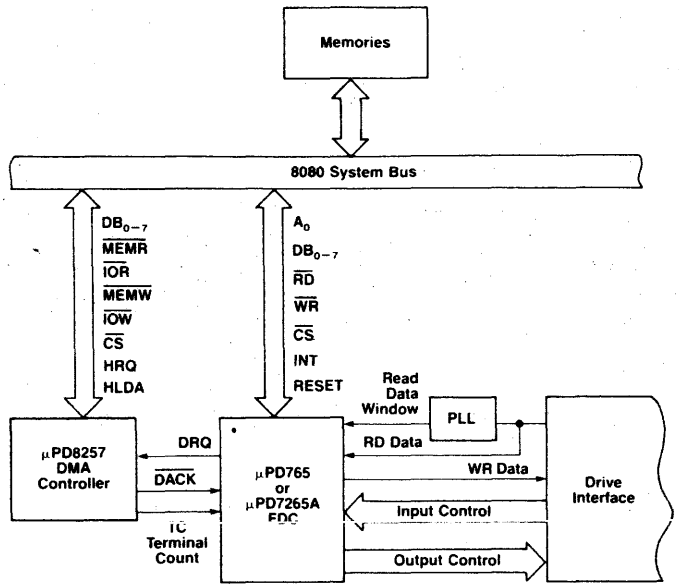

Processor Interface

During Command or Result phases the Main Status Register (described earlier) must be read by the processor before each byte of information is written into or read from the Data Register. After each byte of data read or written to the Data Register, CPU should wait for 12μs before reading Main Status Register. Bits D6 and D7 in the Main Status Register must be in a 0 and 1 state, respectively, before each byte of the command word may be written into the μPD765A/μPD7265. Many of the commands require multiple bytes and, as a result, the Main Status Register must be read prior to each byte transfer to the μPD765A/μPD7265. On the other hand, during the Result phase, D6 and D7 in the Main Status Register must both be 1's (D6 = 1 and D7 = 1) before reading each byte from the Data Register. Note that this reading of the Main Status Register before each byte transfer to the μPD765A/μPD7265 is required only in the Command and Result phases, and *not* during the Execution phase.

During the Execution phase, the Main Status Register need not be read. If the μPD765A/μPD7265 is in the non-DMA mode, then the receipt of each data byte (if μPD765A/μPD7265 is reading data from FDD) is indicated by an Interrupt signal on pin 18 (INT = 1). The generation of a Read signal ($\overline{RD}$ = 0) or Write signal ($\overline{WR}$ = 0) will clear the Interrupt as well as output the data onto the data bus. If the processor cannot handle Interrupts fast enough (every 13 μs for the MFM mode and 27 μs for the FM mode), then it may poll the Main Status Register and bit D7 (RQM) functions as the Interrupt signal. If a Write command is in process then the $\overline{WR}$ signal negates the reset to the Interrupt signal.

Note that in the non-DMA mode it is necessary to examine the Main Status Register to determine the cause of the interrupt, since it could be a data interrupt or a command termination interrupt, either normal or abnormal.

If the μPD765A/μPD7265 is in the DMA mode, no Interrupts are generated during the Execution phase. The μPD765A/μPD7265 generates DRQs (DMA Requests) when each byte of data is available. The DMA Controller responds to this request with both a $\overline{DACK}$ = 0 (DMA Acknowledge) and an $\overline{RD}$ = 0 (Read signal). When the DMA Acknowledge signal goes low ($\overline{DACK}$ = 0), then the DMA Request is cleared (DRQ = 0). If a Write command has been issued then a $\overline{WR}$ signal will appear instead of $\overline{RD}$. After the Execution phase has been completed (Terminal Count has occurred) or the EOT sector read/written, then an Interrupt will occur (INT = 1). This signifies the beginning of the Result phase. When the first byte of data is read during the Result phase, the Interrupt is automatically cleared (INT = 0).

The $\overline{RD}$ or $\overline{WR}$ signals should be asserted while $\overline{DACK}$ is true. The $\overline{CS}$ signal is used in conjunction with $\overline{RD}$ and $\overline{WR}$ as a gating function during programmed I/O operations. $\overline{CS}$ has no effect during DMA operations. If the non-DMA mode is chosen, the $\overline{DACK}$ signal should be pulled up to V_{CC}.

It is important to note that during the Result phase all bytes shown in the Command Table must be read. The Read Data command, for example, has seven bytes of data in the Result phase. All seven bytes must be read in order to successfully complete the Read Data command. The μPD765A/μPD7265 will not accept a new command until all seven bytes have been read. Other commands may require fewer bytes to be read during the Result phase.

The μPD765A/μPD7265 contains five Status Registers. The Main Status Register mentioned above may be read by the processor at any time. The other four Status Registers (ST0, ST1, ST2, and ST3) are available only during the Result phase and may be read only after completing a command. The particular command that has been executed determines how many of the Status Registers will be read.

The bytes of data which are sent to the μPD765A/μPD7265 to form the Command phase and are read out of the μPD765A/μPD7265 in the Result phase must occur in the order shown in the Command Table. That is, the Command Code must be sent first and the other bytes sent in the prescribed sequence. No foreshortening of the Command or Result phases is allowed. After the last byte of data in the Command phase is sent to the μPD765A/μPD7265, the Execution phase automatically starts. In a similar fashion, when the last byte of data is read out in the Result phase, the command is automatically ended and the μPD765A/μPD7265 is ready for a new command.

Polling Feature of the μPD765A/μPD7265

After Reset has been sent to the μPD765A/μPD7265, the Unit Select lines US_0 and US_1 will automatically go into a polling mode. In between commands (and between step pulses in the Seek command) the μPD765A/μPD7265 polls all four FDDs looking for a change in the Ready line from any of the drives. If the Ready line changes state (usually due to a door opening or closing), then the μPD765A/μPD7265 will generate an interrupt. When Status Register 0 (ST0) is read (after Sense Interrupt Status is issued), Not Ready (NR) will be indicated. The polling of the Ready line by the μPD765A/μPD7265 occurs continuously between commands, thus notifying the processor which drives are on or off line. Each drive is polled every 1.024 ms except during the Read/Write commands. When used with a 4 MHz clock for interfacing to minifloppies, the polling rate is 2.048 ms.

© IC MASTER 1984

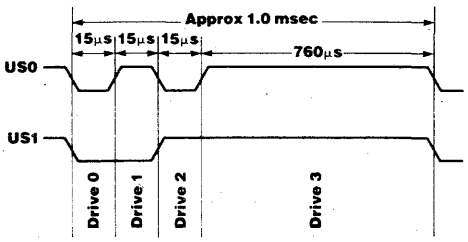

figure 1. (polling feature)

Read Data

A set of nine (9) byte words are required to place the FDC into the Read Data Mode. After the Read Data command has been issued the FDC loads the head (if it is in the unloaded state), waits the specified head settling time (defined in the Specify Command), and begins reading ID Address Marks and ID fields. When the current sector number ("R") stored in the ID Register (IDR) compares with the sector number read off the diskette, then the FDC outputs data (from the data field) byte-to-byte to the main system via the data bus.

After completion of the read operation from the current sector, the Sector Number is incremented by one, and the data from the next sector is read and output on the data bus. This continuous read function is called a "Multi-Sector Read Operation." The Read Data Command may be terminated by the receipt of a Terminal Count signal. TC should be issued at the same time that the $\overline{DACK}$ for the last byte of data is sent. Upon receipt of this signal, the FDC stops outputting data to the processor, but will continue to read data from the current sector, check CRC (Cyclic Redundancy Count) bytes, and then at the end of the sector terminate the Read Data Command. The amount of data which can be handled with a single command to the FDC depends upon MT (multitrack), MF (MFM/FM), and N (Number of Bytes/Sector). Table 1 below shows the Transfer Capacity.

Transfer Capacity

Multi-Track MT	MFM/FM MF	Bytes/Sector N	Maximum Transfer Capacity (Bytes/Sector) (Number of Sectors)	Final Sector Read from Diskettes
0	0	00	(128) (26) = 3,328	26 at Side 0
0	1	01	(256) (26) = 6,656	or 26 at Side 1
1	0	00	(128) (52) = 6,656	26 at Side 1
1	1	01	(256) (52) = 13,312	
0	0	01	(256) (15) = 3,840	15 at Side 0
0	1	02	(512) (15) = 7,680	or 15 at Side 1
1	0	01	(256) (30) = 7,680	15 at Side 1
1	1	02	(512) (30) = 15,360	
0	0	02	(512) (8) = 4,096	8 at Side 0
0	1	03	(1024) (8) = 8,192	or 8 at Side 1
1	0	02	(512) (16) = 8,192	8 at Side 1
1	1	03	(1024) (16) = 16,384	

The "multi-track" function (MT) allows the FDC to read data from both sides of the diskette. For a particular cylinder, data will be transferred starting at Sector 1, Side 0 and completing at Sector L, Side 1 (Sector L = last sector on the side). Note, this function pertains to only one cylinder (the same track) on each side of the diskette.

When N = 0, then DTL defines the data length which the FDC must treat as a sector. If DTL is smaller than the actual data length in a Sector, the data beyond DTL in the Sector, is not sent to the Data Bus. The FDC reads (internally) the complete Sector performing the CRC check, and depending upon the manner of command termination, may perform a Multi-Sector Read Operation. When N is non-zero, then DTL has no meaning and should be set to FF Hexidecimal.

At the completion of the Read Data Command, the head is not unloaded until after Head Unload Time Interval (specified in the Specify Command) has elapsed. If the processor issues another command before the head unloads then the head settling time may be saved between subsequent reads. This time out is particularly valuable when a diskette is copied from one drive to another.

If the FDC detects the Index Hole twice without finding the right sector, (indicated in "R"), then the FDC sets the ND (No Data) flag in Status Register 1 to a 1 (high), and terminates the Read Data Command. (Status Register 0 also has bits 7 and 6 set to 0 and 1 respectively.)

After reading the ID and Data Fields in each sector, the FDC checks the CRC bytes. If a read error is detected (incorrect CRC in ID field), the FDC sets the DE (Data Error) flag in Status Register 1 to a 1 (high), and if a CRC error occurs in the Data Field the FDC also sets the DD (Data Error in Data Field) flag in Status Register 2 to a 1 (high), and terminates the Read Data Command. (Status Register 0 also has bits 7 and 6 set to 0 and 1 respectively.)

If the FDC reads a Deleted Data Address Mark off the diskette, and the SK bit (bit D5 in the first Command Word) is not set (SK = 0), then the FDC sets the CM (Control Mark) flag in Status Register 2 to a 1 (high), and terminates the Read Data Command, after reading all the data in the Sector. If SK = 1, the FDC skips the sector with the Deleted Data Address Mark and reads the next sector. The CRC bits in the deleted data field are not checked when SK = 1.

During disk data transfers between the FDC and the processor, via the data bus, the FDC must be serviced by the processor every 27 μs in the FM Mode, and every 13 μs in the MFM Mode, or the FDC sets the OR (Overrun) flag in Status Register 1 to a 1 (high), and terminates the Read Data Command.

If the processor terminates a read (or write) operation in the FDC, then the ID information in the Result Phase is dependent upon the state of the MT bit and EOT byte. Table 2 shows the values for C, H, R, and N, when the processor terminates the Command.

Functional Description of Commands

MT	HD	Final Sector Transferred to Processor	ID Information at Result Phase C	H	R	N
0	0	Less than EOT	NC	NC	R+1	NC
	0	Equal to EOT	C+1	NC	R = 01	NC
	1	Less than EOT	NC	NC	R+1	NC
	1	Equal to EOT	C+1	NC	R = 01	NC
1	0	Less than EOT	NC	NC	R+1	NC
	0	Equal to EOT	NC	LSB	R = 01	NC
	1	Less than EOT	NC	NC	R+1	NC
	1	Equal to EOT	C+1	LSB	R = 01	NC

Notes: NC (No Change): The same value as the one at the beginning of command execution.
LSB (Least Significant Bit): The least significant bit of H is complemented.

Write Data

A set of nine (9) bytes is required to set the FDC into the Write Data mode. After the Write Data command has been issued the FDC loads the head (if it is in the unloaded state), waits the specified head settling time (defined in the Specify command), and begins reading ID fields. When all four bytes loaded during the command (C, H, R, N) match

the four bytes of the ID field from the diskette, the FDC takes data from the processor byte-by-byte via the data bus and outputs it to the FDD.

After writing data into the current sector, the sector number stored in "R" is incremented by one, and the next data field is written into. The FDC continues this "Multisector Write Operation" until the issuance of a Terminal Count signal. If a Terminal Count signal is sent to the FDC it continues writing into the current sector to complete the data field. If the Terminal Count signal is received while a data field is being written then the remainder of the data field is filled with zeros.

The FDC reads the ID field of each sector and checks the CRC bytes. If the FDC detects a read error (CRC error) in one of the ID fields, it sets the DE (Data Error) flag of Status Register 1 to a 1 (high) and terminates the Write Data command. (Status Register 0 also has bits 7 and 6 set to 0 and 1 respectively.)

The Write command operates in much the same manner as the Read command. The following items are the same, and one should refer to the Read Data command for details:

- Transfer Capacity
- EN (End of Cylinder) Flag
- ND (No Data) Flag
- Head Unload Time Interval
- ID Information when the processor terminates command
- Definition of DTL when N = 0 and when N ≠ 0

In the Write Data mode, data transfers between the processor and FDC, via the data bus, must occur every 27 μs in the FM mode and every 13 μs in the MFM mode. If the time interval between data transfers is longer than this, then the FDC sets the OR (Overrun) flag in Status Register 1 to a 1 (high) and terminates the Write Data command. (Status Register 0 also has bits 7 and 6 set to 0 and 1 respectively.)

Write Deleted Data

This command is the same as the Write Data command except a Deleted Data Address mark is written at the beginning of the data field instead of the normal Data Address mark.

Read Deleted Data

This command is the same as the Read Data command except that when the FDC detects a Data Address mark at the beginning of a data field (and SK = 0 (low)), it will read all the data in the sector and set the CM flag in Status Register 2 to a 1 (high), and then terminate the command. If SK = 1, then the FDC skips the sector with the Data Address mark and reads the next sector.

Read A Track

This command is similar to the Read Data command except that this is a continuous Read operation where the entire data field from each of the sectors is read. Immediately after sensing the index hole, the FDC starts reading all data fields on the track as continuous blocks of data. If the FDC finds an error in the ID or Data CRC check bytes, it continues to read data from the track. The FDC compares the ID information read from each sector with the value stored in the IDR and sets the ND flag of Status Register 1 to a 1 (high) if there is no comparison. Multitrack or skip operations are not allowed with this command.

This command terminates when the number of sectors read is equal to EOT. If the FDC does not find an ID Address mark on the diskette after it senses the index hole for the second time, it sets the MA (Missing Address mark) flag in Status Register 1 to a 1 (high) and terminates the command. (Status Register 0 has bits 7 and 6 set to 0 and 1 respectively.)

Read ID

The Read ID command is used to give the present position of the recording head. The FDC stores the values from the first ID field it is able to read. If no proper ID Address mark is found on the diskette before the index hole is encountered for the second time, then the MA (Missing Address mark) flag in Status Register 1 is set to a 1 (high), and if no data is found then the ND (No Data) flag is also set in Status Register 1 to a 1 (high). The command is then terminated with bits 7 and 6 in Status Register 0 set to 0 and 1 respectively. During this command there is no data transfer between FDC and the CPU except during the result phase.

Format A Track

The Format command allows an entire track to be formatted. After the index hole is detected, data is written on the diskette; Gaps, Address marks, ID fields and data fields, all per the IBM System 34 (Double Density) or System 3740 (Single Density) format are recorded. The particular format which will be written is controlled by the values programmed into N (Number of bytes/sector), SC (Sectors/Cylinder), GPL (Gap Length), and D (Data pattern) which are supplied by the processor during the Command phase. The data field is filled with the byte of data stored in D. The ID field for each sector is supplied by the processor; that is, four data requests per sector are made by the FDC for C (Cylinder number), H (Head number), R (Sector number) and N (Number of bytes/sector). This allows the diskette to be formatted with nonsequential sector numbers, if desired

The processor must send new values for C, H, R, and N to the μPD765A/μPD7265 for each sector on the track. If FDC is set for the DMA mode, it will issue four DMA requests per sector. If it is set for the Interrupt mode, it will issue four interrupts per sector and the processor must supply C, H, R, and N loads for each sector. The contents of the R register are incremented by 1 after each sector is formatted; thus, the R register contains a value of R when it is read during the Result phase. This incrementing and formatting continues for the whole track until the FDC detects the index hole for the second time, whereupon it terminates the command.

If a Fault signal is received from the FDD at the end of a Write operation, then the FDC sets the EC flag of Status Register 0 to a 1 (high) and terminates the command after setting bits 7 and 6 of Status Register 0 to 0 and 1 respectively. Also the loss of a Ready signal at the beginning of a command execution phase causes bits 7 and 6 of Status Register 0 to be set to 0 and 1 respectively.

Table 1 shows the relationship between N, SC, and GPL for various sector sizes.

© IC MASTER 1984

Functional Description of Commands (Cont.)

Format	Sector Size	N	SC	GPL [1]	GPL [2,3]
8" Standard Floppy					
FM Mode	128 bytes sector	00	1A	07	1B
	256	01	0F	0E	2A
	512	02	08	1B	3A
	1024	03	04	47	8A
	2048	04	02	C8	FF
	4096	05	01	C8	FF
MFM Mode [4]	256	01	1A	0E	36
	512	02	0F	1B	54
	1024	03	08	35	74
	2048	04	04	99	FF
	4096	05	02	C8	FF
	8192	06	01	C8	FF
5¼" Minifloppy					
FM Mode	128 bytes/sector	00	12	07	09
	128	00	10	10	19
	256	01	08	18	30
	512	02	04	46	87
	1024	03	02	C8	FF
	2048	04	01	C8	FF
MFM Mode [4]	256	01	12	0A	0C
	256	01	10	20	32
	512	02	08	2A	50
	1024	03	04	80	F0
	2048	04	02	C8	FF
	4096	05	01	C8	FF
3½" Sony Micro Floppydisk					
FM Mode	128 bytes/sector	0	0F	07	1B
	256	1	09	0E	2A
	512	2	05	1B	3A
MFM Mode [4]	256	1	0F	0E	36
	512	2	09	1B	54
	1024	3	05	35	74

Table 1

Notes: [1] Suggested values of GPL in Read or Write commands to avoid splice point between data field and ID field of contiguous sections.
[2] Suggested values of GPL in format command.
[3] All values except sector size are hexidecimal.
[4] In MFM mode FDC cannot perform a Read Write format operation with 128 bytes sector. (N 00)

Scan Commands

The Scan commands allow data which is being read from the diskette to be compared against data which is being supplied from the main system. The FDC compares the data on a byte-by-byte basis and looks for a sector of data which meets the conditions of $D_{FDD} = D_{Processor}$, $D_{FDD} \leq D_{Processor}$, or $D_{FDD} \geq D_{Processor}$. The hexidecimal byte of FF either from memory or from FDD can be used as a mask byte because it always meets the condition of the comparison. One's complement arithmetic is used for comparison (FF = largest number, 00 = smallest number). After a whole sector of data is compared, if the conditions are not met, the sector number is incremented (R + STP → R), and the scan operation is continued. The scan operation continues until one of the following conditions occur: the conditions for scan are met (equal, low, or high), the last sector on the track is reached (EOT), or the terminal count signal is received.

If the conditions for scan are met, then the FDC sets the SH (Scan Hit) flag of Status Register 2 to a 1 (high) and terminates the Scan command. If the conditions for scan are not met between the starting sector (as specified by R) and the last sector on the cylinder (EOT), then the FDC sets the SN (Scan Not Satisfied) flag of Status Register 2 to a 1 (high) and terminates the Scan command. The receipt of a Terminal Count signal from the processor or DMA controller during the scan operation will cause the FDC to complete the comparison of the particular byte which is in process and then to terminate the command. Table 2 shows the status of bits SH and SN under various conditions of Scan.

Command	Status Register 2 Bit 2 = SN	Status Register 2 Bit 3 = SH	Comments
Scan Equal	0	1	$D_{FDD} = D_{Processor}$
	1	0	$D_{FDD} \neq D_{Processor}$
Scan Low or Equal	0	1	$D_{FDD} = D_{Processor}$
	0	0	D_{FDD} $D_{Processor}$
	1	0	D_{FDD} $D_{Processor}$
Scan High or Equal	0	1	$D_{FDD} = D_{Processor}$
	0	0	D_{FDD} $D_{Processor}$
	1	0	D_{FDD} $D_{Processor}$

Table 2

If the FDC encounters a Deleted Data Address mark on one of the sectors (and SK = 0), then it regards the sector as the last sector on the cylinder, sets the CM (Control Mark) flag of Status Register 2 to a 1 (high) and terminates the command. If SK = 1, the FDC skips the sector with the Deleted Address mark and reads the next sector. In the second case (SK = 1), the FDC sets the CM (Control Mark) flag of Status Register 2 to a 1 (high) in order to show that a Deleted sector had been encountered.

When either the STP (contiguous sectors = 01, or alternate sectors = 02) sectors are read or the MT (Multitrack) is programmed, it is necessary to remember that the last sector on the track must be read. For example, if STP = 02, MT = 0, the sectors are numbered sequentially 1 through 26 and the Scan command is started at sector 21, the following will happen: Sectors 21, 23, and 25 will be read, then the next sector (26) will be skipped and the index hole will be encountered before the EOT value of 26 can be read. This will result in an abnormal termination of the command. If the EOT had been set at 25 or the scanning started at sector 20, then the Scan command would be completed in a normal manner.

During the Scan command, data is supplied by either the processor or DMA Controller for comparison against the data read from the diskette. In order to avoid having the OR (Overrun) flag set in Status Register 1, it is necessary to have the data available in less than 27 μs (FM mode) or 13 μs (MFM mode). If an Overrun occurs, the FDC ends the command with bits 7 and 6 of Status Register 0 set to 0 and 1, respectively.

Seek

The Read/Write head within the FDD is moved from cylinder to cylinder under control of the Seek command. FDC has four independent Present Cylinder Registers for each drive. They are cleared only after the Recalibrate command. The FDC compares the PCN (Present Cylinder Number) which is the current head position with the NCN (New Cylinder Number), and if there is a difference, performs the following operations:

PCN < NCN: Direction signal to FDD set to a 1 (high), and Step Pulses are issued. (Step In)

PCN > NCN: Direction signal to FDD set to a 0 (low), and Step Pulses are issued. (Step Out)

The rate at which Step pulses are issued is controlled by SRT (Stepping Rate Time) in the Specify command. After each Step pulse is issued NCN is compared against PCN, and when NCN = PCN, the SE (Seek End) flag is set in Status Register 0 to a 1 (high), and the command is terminated. At this point FDC interrupt goes high. Bits D_0B-D_3B in the Main Status Register are set during the Seek operation and are cleared by the Sense Interrupt Status command.

During the command phase of the Seek operation the FDC is in the FDC Busy state, but during the execution phase it is in the Nonbusy state. While the FDC is in the Nonbusy state, another Seek command may be issued, and in this manner parallel Seek operations may be done on up to four drives at once. No other command can be issued for as long as the FDC is in the process of sending step pulses to any drive.

If an FDD is in a Not Ready state at the beginning of the command execution phase or during the Seek operation, then the NR (Not Ready) flag is set in Status Register 0 to a 1 (high), and the command is terminated after bits 7 and 6 of Status Register 0 are set to 0 and 1 respectively.

If the time to write three bytes of Seek command exceeds 150μs, the timing between the first two step pulses may be shorter than set in the Specify command by as much as 1ms.

Recalibrate

The function of this command is to retract the Read/Write head within the FDD to the Track 0 position. The FDC clears the contents of the PCN counter and checks the status of the Track 0 signal from the FDD. As long as the Track 0 signal is low, the Direction signal remains 0 (low) and step pulses are issued. When the Track 0 signal goes high, the SE (Seek End) flag in Status Register 0 is set to a 1 (high) and the command is terminated. If the Track 0 signal is still low after 77 step pulses have been issued, the FDC sets the SE (Seek End) and EC (Equipment Check) flags of Status Register 0 to both 1s (highs) and terminates the command after bits 7 and 6 of Status Register 0 are set to 0 and 1 respectively.

The ability to do overlap Recalibrate commands to multiple FDDs and the loss of the Ready signal, as described in the Seek command, also applies to the Recalibrate command. If the Diskette has more than 77 tracks, then Recalibrate command should be issued twice, in order to position the Read/Write head to the Track 0.

Sense Interrupt Status

An Interrupt signal is generated by the FDC for one of the following reasons:

1. Upon entering the Result phase of:
   a. Read Data command
   b. Read A Track command
   c. Read ID command
   d. Read Deleted Data command
   e. Write Data command
   f. Format A Cylinder command
   g. Write Deleted Data command
   h. Scan commands
2. Ready Line of FDD changes state
3. End of Seek or Recalibrate command
4. During Execution phase in the non-DMA mode

Interrupts caused by reasons 1 and 4 above occur during normal command operations and are easily discernible by the processor. During an execution phase in non-DMA mode, DB5 in the Main Status Register is high. Upon entering the Result phase this bit gets cleared. Reasons 1 and 4 do not require Sense Interrupt Status commands. The interrupt is cleared by Reading/Writing data to the FDC. Interrupts caused by reasons 2 and 3 above may be uniquely identified with the aid of the Sense Interrupt Status command. This command when issued resets the Interrupt signal and via bits 5, 6, and 7 of Status Register 0 identifies the cause of the interrupt.

Seek End Bit 5	Interrupt Code Bit 6	Interrupt Code Bit 7	Cause
0	1	1	Ready Line changed state, either polarity
1	0	0	Normal Termination of Seek or Recalibrate command
1	1	0	Abnormal Termination of Seek or Recalibrate command

Table 3

The Sense Interrupt Status command is used in conjunction with the Seek and Recalibrate commands which have no result phase. When the disk drive has reached the desired head position the μPD765A/μPD7265 will set the Interrupt line true. The host CPU must then issue a Sense Interrupt Status command to determine the actual cause of the interrupt, which could be Seek End or a change in ready status from one of the drives. A graphic example is shown:

Seek, Recalibrate, and Sense Interrupt Status

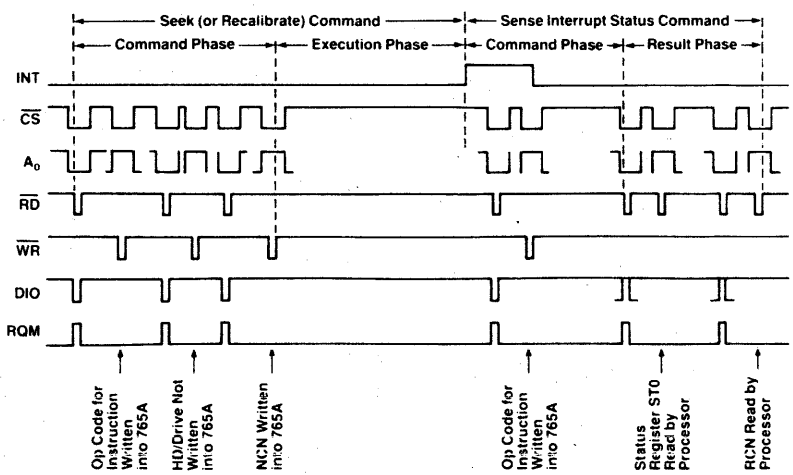

© IC MASTER 1984

Specify

The Specify command sets the initial values for each of the three internal timers. The HUT (Head Unload Time) defines the time from the end of the execution phase of one of the Read/Write commands to the head unload state. This timer is programmable from 16 to 240ms in increments of 16ms (01 = 16ms, 02 = 32ms . . . $0F_{16}$ = 240ms). The SRT (Step Rate Time) defines the time interval between adjacent step pulses. This timer is programmable from 1 to 16 ms in increments of 1 ms (F = 1ms, E = 2ms, D = 3ms, etc.). The HLT (Head Load Time) defines the time between when the Head Load signal goes high and the Read/Write operation starts. This timer is programmable from 2 to 254 ms in increments of 2 ms (01 = 2ms, 02 = 4ms, 03 = 6ms . . . 7F = 254ms).

The time intervals mentioned above are a direct function of the clock (CLK on pin 19). Times indicated above are for an 8MHz clock; if the clock was reduced to 4MHz (minifloppy application) then all time intervals are increased by a factor of 2.

The choice of a DMA or non-DMA operation is made by the ND (Non-DMA) bit. When this bit is high (ND = 1) the Non-DMA mode is selected, and when ND = 0 the DMA mode is selected.

Sense Drive Status

This command may be used by the processor whenever it wishes to obtain the status of the FDDs. Status Register 3 contains the Drive Status information stored internally in FDC registers.

Invalid

If an Invalid command is sent to the FDC (a command not defined above), then the FDC will terminate the command after bits 7 and 6 of Status Register 0 are set to 1 and 0 respectively. No interrupt is generated by the μPD765A/μPD7265 during this condition. Bits 6 and 7 (DIO and RQM) in the Main Status Register are both high (1), indicating to the processor that the μPD765A/μPD7265 is in the Result phase and the contents of Status Register 0 (ST0) must be read. When the processor reads Status Register 0 it will find an 80 hex, indicating an Invalid command was received.

A Sense Interrupt Status command must be sent after a Seek or Recalibrate Interrupt, otherwise the FDC will consider the next command to be an Invalid command.

In some applications the user may wish to use this command as a No-Op command to place the FDC in a standby or No Operation state.

μPD765A (FM Mode)

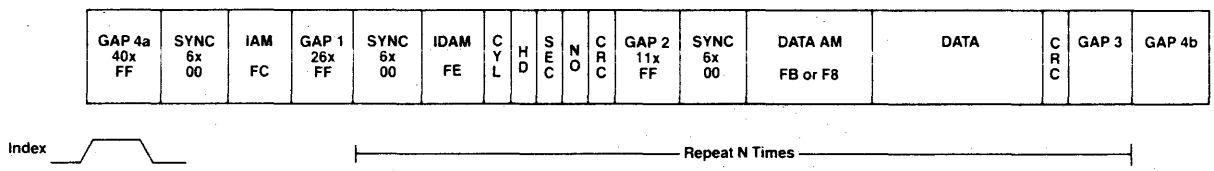

μPD7265 (FM Mode)

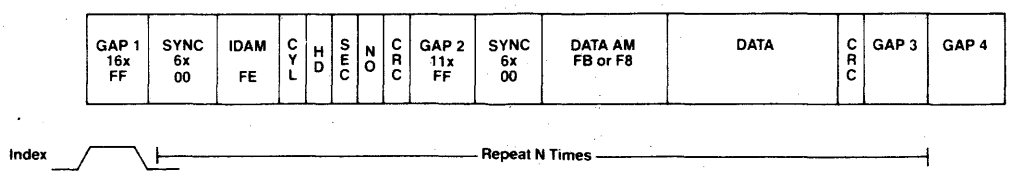

μPD765A (MFM Mode)

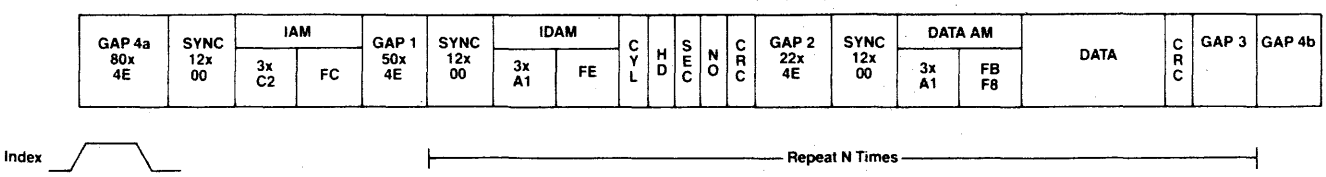

μPD7265 (MFM Mode)

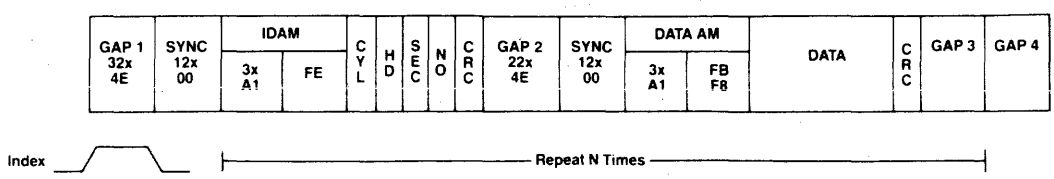

μPD7810/μPD7811 HIGH-END SINGLE-CHIP 8-BIT MICROCOMPUTER WITH A/D CONVERTER

Description

The NEC μPD7810/μPD7811 is a high-performance single-chip microcomputer integrating sophisticated on-chip peripheral functionality normally provided by external components. The device's internal 16-bit ALU and data paths, combined with a powerful instruction set and addressing, make the μPD7810/7811 appropriate in data processing as well as control applications. The device integrates a 16-bit ALU, 4K-ROM, 256-byte RAM with an 8-channel A/D converter, a multifunction 16-bit timer/event counter, two 8-bit timers, a USART and two zero-cross detect inputs on a single die, to direct the device into fast, high-end processing applications involving analog signal interface and processing.

The μPD7811 is the mask-ROM high volume production device embedded with custom customer program. The μPD7810 is a ROM-less version for prototyping and small volume production. The μPD78PG11E is a piggy-back EPROM version for design development.

Features

- ☐ NMOS silicon gate technology requiring +5V supply
- ☐ Complete single-chip microcomputer
  - 16-bit ALU
  - 4K-ROM
  - 256-byte RAM
- ☐ 44 I/O lines
- ☐ Two zero-cross detect inputs
- ☐ Two 8-bit timers
- ☐ Multifunction 16-bit timer/event counter
- ☐ Expansion capabilities
  - 8085A bus compatible
  - 60K-byte external memory address range
- ☐ 8-channel, 8-bit A/D converter
  - Auto scan
  - Channel select
- ☐ Full duplex USART
  - Synchronous and asynchronous
- ☐ 153 instruction set
  - 16-bit arithmetic, multiply and divide
- ☐ 1μs instruction cycle time (12MHz operation)
- ☐ Prioritized interrupt structure
  - 2 external
  - 4 internal
- ☐ Standby function
- ☐ On-chip clock generator
- ☐ 64-quil package

Pin Configuration

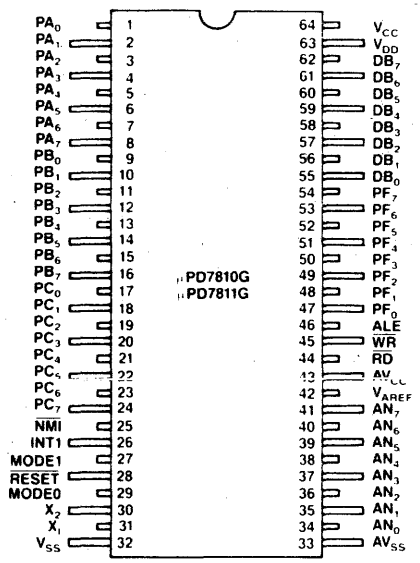

Pin Identification

Pin No.	Pin Symbol	Function	
1–8	PA_0–PA_7	Port A: (Three-state input/output) 8-bit programmable I/O port. Each line independently programmable as an input or output. Reset places all lines of Port A in input mode.	
9–16	PB_0–PB_7	Port B: (Three-state input/output) 8-bit programmable I/O port. Each line independently programmable as an input or output. Reset places all lines of Port B in input mode.	
17	PC_0	Port C: (Three-state input/output) 8-bit programmable I/O port. Each line independently programmable as an input or output. Alternatively, Port C may be used as control lines for USART and timer. Reset puts Port C in Port mode and all lines in input mode.	Transmit Data (TxD): Serial data output terminal.
18	PC_1		Receive Data (RxD): Serial data input terminal.
19	PC_2		Serial Clock ($\overline{SCK}$): Serial clock input/output terminal. When internal clock is used, the output can be selected; when an external clock is used, the input can be selected.
20	PC_3		Timer Input (TI)/interrupt request input (INT_2): Timer clock input terminal; can also be used as falling edge, maskable-interrupt input terminal and AC input zero-cross detection terminal.
21	PC_4		Timer Output (TO): This output signal is a square wave whose frequency is determined by the timer/counter.
22	PC_5		Counter Input (CI): External pulse input terminal to the timer/event counter.
23–24	PC_6, PC_7		Counter Outputs 0, 1 (CO_0–CO_1): Programmable rectangular wave output terminal based on timer/event counter.

© IC MASTER 1984

AC Characteristics

T_a = −10°C to 70°C; V_{CC} = +5.0V ± 5%; V_{SS} = 0V; V_{CC} − 0.8V ≤ V_{DD} ≤ V_{CC}

Read/Write Operation

Parameter	Symbol	Limits f_{XTAL} = 10MHz Min	Max	f_{XTAL} = 12 MHz Min	Max	Unit	Test Conditions
X_1 Input Cycle Time	t_{CYC}	100		83		ns	
Address Setup to ALE ↓	t_{AL}	100		65		ns	
Address Hold after ALE ↓	t_{LA}	70		50		ns	
Address to $\overline{RD}$ ↓ Delay Time	t_{AR}	200		150		ns	
$\overline{RD}$ ↓ to Address Floating	t_{AFR}		20		20	ns	
Address to Data Input	t_{AD}		480		360	ns	
ALE ↓ to Data Input	t_{LDR}		300		215	ns	
$\overline{RD}$ ↓ to Data Input	t_{RD}		250		180	ns	
ALE ↓ to $\overline{RD}$ ↓ Delay Time	t_{LR}	50		35		ns	
Data Hold Time to $\overline{RD}$ ↑	t_{RDH}	0		0		ns	
$\overline{RD}$ ↑ to ALE ↑ Delay Time	t_{RL}	150		115		ns	
$\overline{RD}$ Width Low	t_{RR}	350		280		ns	Data Read
		650		530		ns	OP Code Fetch
ALE Width High	t_{LL}	160		125		ns	
Address to $\overline{WR}$ ↓ Delay	t_{AW}	200		150		ns	
ALE ↓ to Data Output	t_{LDW}		210		195	ns	
$\overline{WR}$ ↓ to Data Output	t_{WD}	130		100		ns	
ALE ↓ to $\overline{WR}$ ↓ Delay	t_{LW}	50		35		ns	
Data Setup Time to $\overline{WR}$ ↑	t_{DW}	300		230		ns	
Data Hold Time to $\overline{WR}$ ↑	t_{WDH}	130		95		ns	
$\overline{WR}$ ↑ to ALE ↑ Delay Time	t_{WL}	150		115		ns	
$\overline{WR}$ Width Low	t_{WW}	350		280		ns	

Note: ① Load capacitance: C_L = 150pF.

Serial Operation

Parameter	Symbol	Limits Min	Typ	Max	Unit	Test Conditions	
$\overline{SCK}$ Cycle Time	t_{CYK}	1			μs	$\overline{SCK}$ Input	②
		500			ns		③
		2			μs	$\overline{SCK}$ Output	
$\overline{SCK}$ Width Low	t_{KKL}	400			ns	$\overline{SCK}$ Input	②
		200			ns		③
		900			ns	$\overline{SCK}$ Output	
$\overline{SCK}$ Width High	t_{KKH}	400			ns	$\overline{SCK}$ Input	②
		200			ns		③
		900			ns	$\overline{SCK}$ Output	
RxD Setup Time to $\overline{SCK}$ ↑	t_{RXK}	80			ns		②
RxD Hold Time After $\overline{SCK}$ ↑	t_{KRX}	80			ns		②
$\overline{SCK}$ ↓ TxD Delay Time	t_{KTX}			210	ns		②

Notes: ② 1x Baud rate in Asynchronous, Synchronous, or I/O Interface mode.
③ 16x Baud rate or 64x Baud rate in Asynchronous mode.

AC Characteristics (Cont.)

T_a = −10°C to +70°C; V_{CC} = +5.0V ± 5%; V_{SS} = 0V; V_{CC} − 0.8V ≤ V_{DD} ≤ V_{CC}

Zero-cross Characteristics

Parameter	Symbol	Limits Min	Typ	Max	Unit	Test Conditions
Zero-cross Detection Input	V_{ZX}	1		3	VAC_{p-p}	AC Coupled
Zero-cross Accuracy	A_{ZX}			±135	mV	60Hz Sine Wave
Zero-cross Detection Input Frequency	f_{ZX}	0.05		1	kHz	

T_a = −10°C to +70°C; V_{CC} = AV_{CC} = +5.0V ± 5%; V_{SS} = AV_{SS} = 0V; AV_{CC} − 0.5V ≤ V_{AREF} ≤ AV_{CC}

A/D Converter Characteristics

Parameter	Symbol	Limits Min	Typ	Max	Unit	Test Conditions
Resolution		8			Bits	
Absolute Accuracy				0.4% ± ½	LSB	T_a = −10°C to +50°C
				0.6% ± ½	LSB	T_a = −10°C to +70°C ④
Conversion Time	t_{CONV}	576			t_{CYC}	83ns ≤ t_{CYC} ≤ 110ns
		432			t_{CYC}	110ns ≤ t_{CYC} ≤ 170ns
Sampling Time	t_{SAMP}	96			t_{CYC}	83ns ≤ t_{CYC} ≤ 110ns
		72			t_{CYC}	110ns ≤ t_{CYC} ≤ 170ns
Analog Input Voltage	V_{IA}	0		V_{AREF}	V	

Note: ④ In case of f_{XTAL} ≤ 10MHz, T_a = 40°C to +85°C.

Bus Timing Depending on t_{CYC}

Symbol	Calculating Expression	Min/Max	Unit
t_{AL}	2T − 100	Min	ns
t_{LA}	T − 30	Min	ns
t_{AR}	3T − 100	Min	ns
t_{AD}	7T − 220	Max	ns
t_{LDR}	5T − 200	Max	ns
t_{RD}	4T − 150	Max	ns
t_{LR}	T − 50	Min	ns
t_{RL}	2T − 50	Min	ns
t_{RR}	4T − 50 (Data Read)	Min	ns
	7T − 50 (OP Code Fetch)		
t_{LL}	2T − 40	Min	ns
t_{AW}	3T − 100	Min	ns
t_{LDW}	T + 110	Max	ns
t_{LW}	T − 50	Min	ns
t_{DW}	4T − 100	Min	ns
t_{WDH}	2T − 70	Min	ns
t_{WL}	2T − 50	Min	ns
t_{WW}	4T − 50	Min	ns
t_{CYK}	12T ($\overline{SCK}$ Input) ①	Min	ns
	24T ($\overline{SCK}$ Output)		
t_{KKL}	6T − 100 ($\overline{SCK}$ Input) ①	Min	ns
	12T − 100 ($\overline{SCK}$ Output)		
t_{KKH}	6T − 100 ($\overline{SCK}$ Input) ①	Min	ns
	12T − 100 ($\overline{SCK}$ Output)		

Notes: ① 1x Baud rate in Asynchronous, Synchronous, or I/O Interface mode.
$T = t_{CYC} = 1/f_{XTAL}$.
The items out of this list are not dependent on oscillating frequency (f_{XTAL}).

© IC MASTER 1984

Instruction Groups (Cont.)

CPU Control

Mnemonic	Operand	OP Code B1	OP Code B2	OP Code B3	OP Code B4	State	Operation	Skip Condition
SK	f	01001000	00001 $F_2F_1F_0$			8	Skip if f = 1	f = 1
SKN	f		0001			8	Skip if f = 0	f = 0
SKIT	irf		010 $I_4I_3I_2I_1I_0$			8	Skip if irf = 1, then reset irf	irf = 1
SKNIT	irf		011 $I_4I_3I_2I_1I_0$			8	Skip if irf = 0 Reset irf, if irf = 1	irf = 0
NOP		00000000				4	No Operation	
EI		10101010				4	Enable Interrupt	
DI		10111010				4	Disable Interrupt	
HLT		01001000	00111011			11	Halt	

Notes: *①: B2 (Data): rpa2 = D + byte, H + byte.
*②: B3 (Data): rpa3 = D + byte, H + byte.
*③: Right side of slash (/) in states indicates case rpa2, rpa3 = D + byte, H + A, H + B, H + EA, H + byte
*④: In the case of skip condition, the idle states are as follows:
1-byte instruction: 4 states 2-byte instruction (with *): 7 states
2-byte instruction: 8 states 3-byte instruction (with *): 10 states
3-byte instruction: 11 states 4-byte instruction: 14 states

Absolute Maximum Ratings*

T_a = 25°C

Power Supply Voltages, V_{CC}		−0.5V to +7.0V
	V_{DD}	−0.5V to +7.0V
	AV_{CC}	−0.5V to +7.0V
Input Voltage, V_I		−0.5V to +7.0V
Output Voltage, V_O		−0.5V to +7.0V
Reference Input Voltage, V_{AREF}		−0.5V to +7.0V
Operating Temperature, T_{OPT}		
10MHz < f_{XTAL} ≤ 12MHz		−10°C to +70°C
f_{XTAL} ≤ 10MHz		−40°C to 85°C
Storage Temperature, T_{STG}		−65°C to +150°C

*COMMENT: Exposing the device to stresses above those listed in Absolute Maximum Ratings could cause permanent damage. The device is not meant to be operated under conditions outside the limits described in the operational sections of this specification. Exposure to absolute maximum rating conditions for extended periods may affect device reliability.

Operating Conditions

Parameter Osc. Freq.	T_a	V_{CC}, AV_{CC}
10MHz < f_{XTAL} ≤ 12 MHz	−10°C to +70°C	+5.0V ± 5%
f_{XTAL} ≤ 10MHz	−40°C to 85°C	+5.0V ± 10%

Capacitance

T_a = 25°C; V_{CC} = V_{DD} = V_{SS} = 0V

Parameter	Symbol	Limits Min	Limits Typ	Limits Max	Unit	Test Conditions
Capacitance	C_I			10	pF	Af_c = 1MHz Unmeasured pin returned to 0V.
Output Capacitance	C_O			20	pF	
I/O Capacitance	C_{IO}			20	pF	

DC Characteristics

T_a = −10°C to +70°C; V_{CC} = −5.0V ± 5%; V_{SS} = 0V; V_{CC} −0.8V ≤ V_{DD} ≤ V_{CC}

Parameter	Symbol	Limits Min	Limits Typ	Limits Max	Unit	Test Conditions
Input Low Voltage	V_{IL}	0		0.8	V	
Input High Voltage	V_{IH1}	2.0		V_{CC}	V	All except $\overline{SCK}$, $\overline{RESET}$ and X1
	V_{IH2}	0.8V_{CC}		V_{CC}	V	$\overline{SCK}$, X1
	V_{IH3}	0.8V_{DD}		V_{CC}	V	$\overline{RESET}$
Output Low Voltage	V_{OL}			0.45	V	I_{OL} = 2.0mA
Output High Voltage	V_{OH}	2.4			V	I_{OH} = −200μA
Input Current	I_I			±200	μA	INT_1, TI (PC_3); +0.45V ≤ V_{IN} < V_{CC}
Input Leakage Current	I_{LI}			±10	μA	All except INT_1, TI (PC_3) 0V ≤ V_{IN} ≤ V_{CC}
Output Leakage Current	I_{LO}			±10	μA	+0.45V ≤ V_O ≤ V_{CC}
V_{DD} Supply Current	I_{DD}		1.5①	3.5	mA	T_a = −40°C to +85°C
V_{CC} Supply Current	I_{CC}		110①	220	mA	T_a = −40°C to +85°C

Note: ① T_a = 25°C; V_{CC} = V_{DD} = +5.0V.

© IC MASTER 1984

Pin Identification (Cont.)

Pin No.	Pin Symbol	Function
25	$\overline{NMI}$	Falling-edge, nonmaskable interrupt ($\overline{NMI}$) input.
26	INT_1	This signal is a rising-edge, maskable interrupt input. This input is also used to make the zero-cross detection AC input.
27	MODE1	Used as input in conjunction with MODE0 to select appropriate memory expansion mode. Also outputs M1 Signal during each opcode fetch.
28	$\overline{RESET}$	(Input, active low), $\overline{RESET}$ initializes the μPD7811.
29	MODE0	Used as input in conjunction with MODE1 to select appropriate memory expansion mode. Also used to ouput $\overline{IO/M}$.
30–31	X_2, X_1 (crystal)	This is a crystal connection terminal for system clock oscillation. When an external clock is supplied X_1 is the input.
32	V_{SS}	Power supply ground potential.
33	AV_{SS}	A/D converter power supply ground potential. Sets conversion range lower limit.
34–41	AN_0–AN_7	Eight analog inputs to the A/D converter. AN_7–AN_4 can also be used as a digital input port for falling edge detection.
42	V_{AREF}	Reference voltage for A/D converter. Sets conversion range upper limit.
43	AV_{CC}	Power supply voltage for A/D converter.

Pin No.	Pin Symbol	Function	
44	$\overline{RD}$	(Three-state output, active low) $\overline{RD}$ is used as a strobe to gate data from external devices onto the data bus. $\overline{RD}$ goes high during Reset.	
45	$\overline{WR}$	(Three-state output, active low) $\overline{WR}$, when active, indicates that the data bus holds valid data. Used as a strobe signal for external memory or I/O write operations. $\overline{WR}$ goes high during Reset.	
46	ALE	The strobe signal is for latching the address signal to the output from PD_7–PD_0 when accessing external expansion memory.	
47–54	PF_0–PF_7	Port F: (Three-state input/output) 8-bit programmable I/O port. Each line configurable independently as an input or output.	Address Bus: When external expansion memory is used, multiplexed address/data bus can be selected.
55–62	DB_0–DB_7	Port D: 8-bit programmable I/O port. This byte can be designated as either input or output.	Address Bus: When external expansion memory is used, multiplexed address/data bus can be selected.
63	V_{DD}	This is a backup power terminal for on-chip RAM.	
64	V_{CC}	+5V power supply.	

Notes: 1 clock cycle = 1 CL = 3/f.
1 machine cycle = 3 or 4 clock cycles.
1 instruction cycle = 1 to 19 machine cycles.
f: System clock frequency (MHz).

Block Diagram

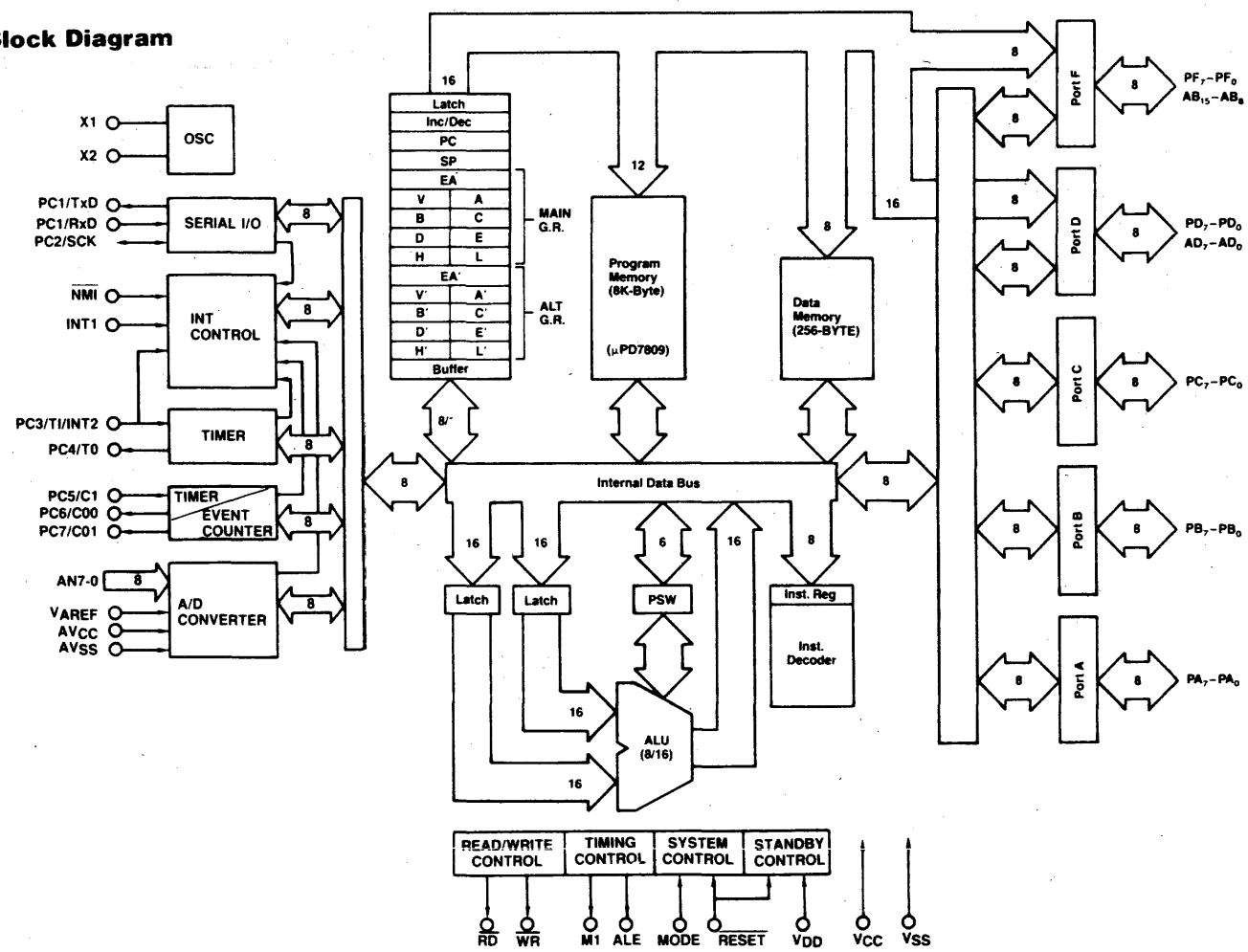

© IC MASTER 1984

PRELIMINARY

μPD7809/μPD7807/μPD78P09 HIGH-END SINGLE-CHIP 8-BIT MICROCOMPUTER WITH COMPARATOR, 8K ROM

Description

The μPD7809/7807/78P09 single chip microcomputer augments the high-end in NEC's family of 8-bit microcomputers with sophisticated on-chip peripheral functionality. Like its nearest relative in the family, the μPD7811, this device has a fast internal 16-bit ALU and data paths, 256 bytes of RAM, multifunction 16-bit timer/event counter, two 8-bit timers, a USART, and two zero-cross detect inputs. Features that distinguish this device in the NEC 8-bit family are: 8K ROM, programmable threshold comparator (8 inputs), programmable WAIT function, watchdog timer, hold and hold acknowledge for DMA interface, and bit test/write instructions for both RAM and I/O.

The μPD7809 is the mask-ROM version with the customer's program on chip. The μPD7807 is the ROM-less version for prototyping and small volume applications. The μPD78P09 is an EPROM version of the 8K ROM μPD7809.

Features

- ☐ NMOS silicon gate technology requiring +5v supply
- ☐ Complete single chip microcomputer
  - — 16-bit ALU
  - — 8K ROM
  - 256 bytes RAM
- ☐ Large I/O capability
  - — 40 I/O port lines (μPD7809)
  - — 28 I/O port lines (μPD7807)
  - — 8 input lines
- ☐ Two zero-cross detect inputs
- ☐ Expansion capability (total of 64K memory access)
  - — 8085A bus compatible
  - — 56K bytes external memory address range
- ☐ Programmable threshold comparator
  - — 8 inputs, 1 of 16 software selectable levels
- ☐ Full duplex USART
  - — Synchronous and asynchronous
- ☐ 165 powerful instructions
  - — 16-bit arithmetic, multiply and divide
- ☐ 1μs instruction cycle time
- ☐ Prioritized interrupt structure
  - — 3 external
  - — 8 internal
- ☐ Hold, hold acknowledge for DMA interface
- ☐ Programmable WAIT function
- ☐ Watchdog timer
- ☐ Standby function
- ☐ On-chip clock generator
- ☐ 64-pin QUIL package

Pin Configuration

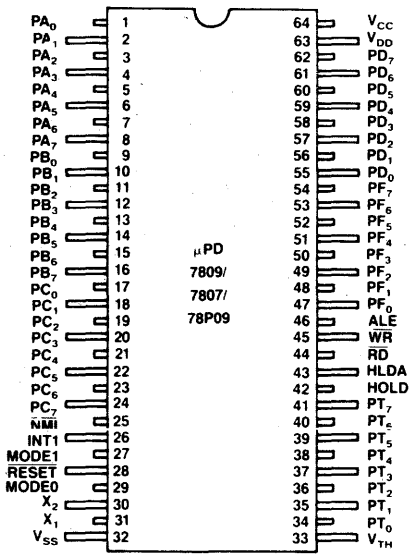

Pin Identification

Pin No.	Pin Symbol	Function	
1–8	PA_0–PA_7	Port A: (Three-state input/output) 8-bit programmable I/O port. Each line independently programmable as an input or output. Reset places all lines of Port A in input mode.	
9–16	PB_0–PB_7	Port B: (Three-state input/output) 8-bit programmable I/O port. Each line independently programmable as an input or output. Reset places all lines of Port B in input mode.	
17	PC_0	Port C: (Three-state input/output) 8-bit programmable I/O port. Each line independently programmable as an input or output. Alternatively, Port C may be used as control lines for USART and timer. Reset puts Port C in Port mode and all lines in input mode.	Transmit Data (TxD): Serial data output terminal.
18	PC_1		Receive Data (RxD): Serial data input terminal.
19	PC_2		Serial Clock (SCK): Serial clock input/output terminal. When internal clock is used, the output can be selected; when an external clock is used, the input can be selected.
20	PC_3		Timer Input (TI)/interrupt request input (INT_2): Timer clock input terminal; can also be used as falling edge, maskable-interrupt input terminal and AC input zero-cross detection terminal.
21	PC_4		Timer Output (TO): This output signal is a square wave whose frequency is determined by the timer/counter.
22	PC_5		Counter Input (CI): External pulse input terminal to the timer/event counter.
23–24	PC_6, PC_7		Counter Outputs 0, 1 (CO_0–CO_1): Programmable rectangular wave output terminal based on timer/event counter.

© IC MASTER 1984

Block Diagram

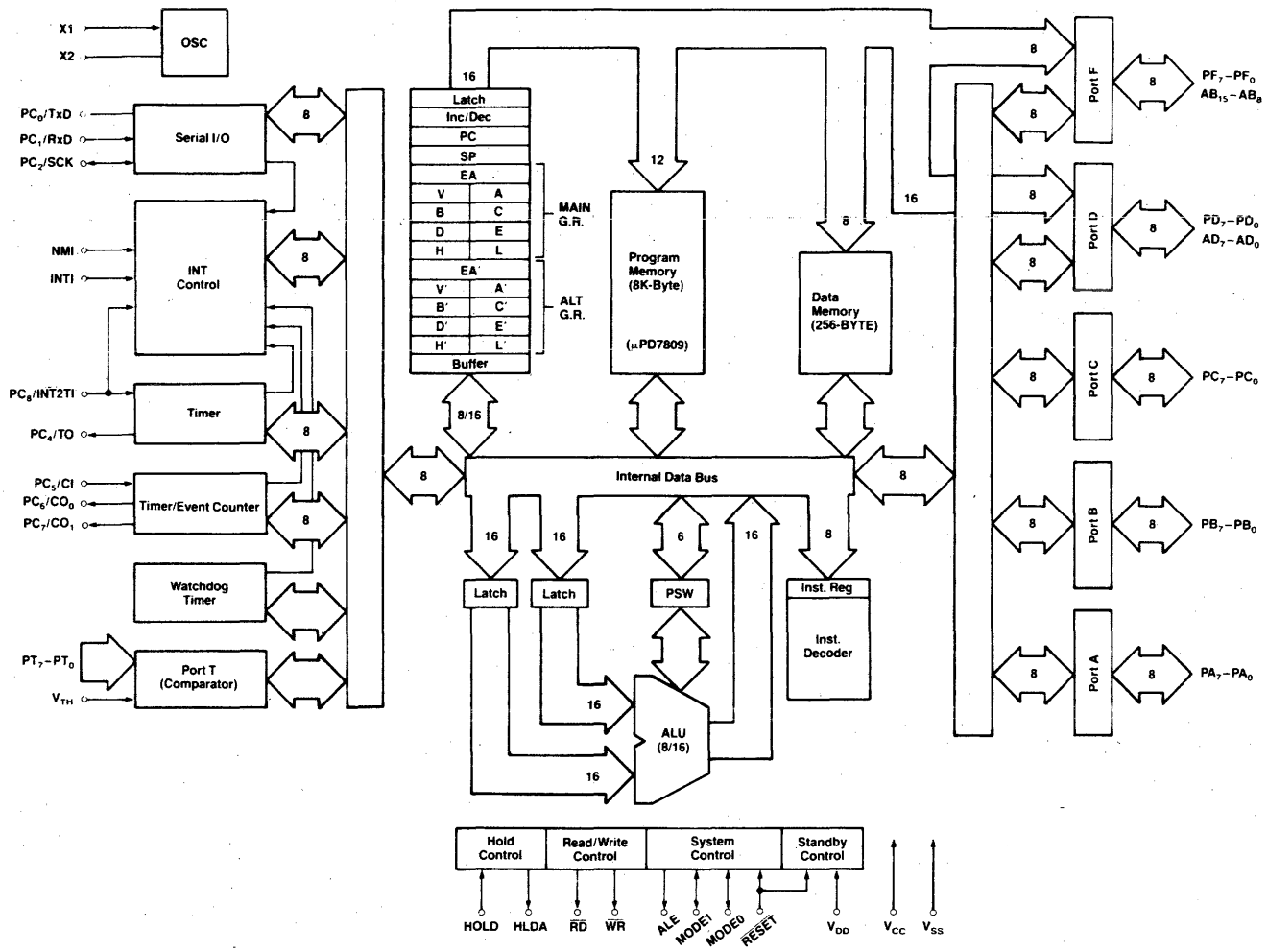

Note: The μPD7807 has no on chip ROM (8K bytes).

© IC MASTER 1984

Pin Identification (Cont.)

Pin No.	Pin Symbol	Function	
25	$\overline{NMI}$	Falling-edge, nonmaskable interrupt (NMI) input.	
26	INT_1	This signal is a rising-edge, maskable interrupt input. This input is also used to make the zero-cross detection AC input.	
27	MODE1	Used as input in conjunction with MODE0 to select appropriate memory expansion mode. Also outputs M1 Signal during each opcode fetch.	
28	RESET	(Input, active low), RESET initializes the μPD7811.	
29	MODE0	Used as input in conjunction with MODE1 to select appropriate memory expansion mode. Also used to ouput IO/M.	
30–31	X_2, X_1 (crystal)	This is a crystal connection terminal for system clock oscillation. When an external clock is supplied X_1 is the input.	
32	V_{SS}	Power supply ground potential.	
33	V_{TH}	V_{TH} threshold voltage input. Reference voltage for variable threshold input, Port T. Threshold voltage to each Port T input is software programmable to 16 different levels	
34–41	PT_1–PT_7	Eight variable threshold input ports. Ports T_0–T_7 inputs are each connected internally to comparators where the other input is the threshold voltage.	
42	HOLD	HOLD request input. When high, CPU is in a HOLD state until HOLD goes low.	
43	HLDA	HOLD Acknowledge output by CPU when HOLD state is accepted; goes low when HOLD is released.	
44	$\overline{RD}$	(Three-state output, active low) RD is used as a strobe to gate data from external devices onto the data bus. RD goes high during Reset.	
45	$\overline{WR}$	(Three-state output, active low) WR, when active, indicates that the data bus holds valid data. Used as a strobe signal for external memory or I/O write operations. WR goes high during Reset.	
46	ALE	The strobe signal is for latching the address signal to the output from PD_7–PD_0 when accessing external expansion memory.	
47–54	PF_0–PF_7	Port F: (Three-state input/output) 8-bit programmable I/O port. Each line configurable independently as an input or output.	Address Bus: When external expansion memory is used, multiplexed address/data bus can be selected.
55–62	DB_0–DB_7	Port D: 8-bit programmable I/O port. This byte can be designated as either input or output.	Address Bus: When external expansion memory is used, multiplexed address/data bus can be selected.
63	V_{DD}	This is a backup power terminal for on-chip RAM.	
64	V_{CC}	+5V power supply.	

Notes: 1 clock cycle = 1 CL = 3/f.
1 machine cycle = 3 or 4 clock cycles.
1 instruction cycle = 1 to 19 machine cycles.
f: System clock frequency (MHz).

Instruction Set

In addition to the basic 7800 family instruction set, the following instructions are incorporated in the μPD7809/7807/78P09:

- ☐ 16-bit data transfers between memory, registers, and extended accumulator
- ☐ 16-bit addition and subtraction
- ☐ 16-bit comparison and skip
- ☐ 16-bit and, or, ex-or operation
- ☐ 16-bit data shift and rotation
- ☐ Multiply
  8-bit by 8-bit, 16-bit product
  Less than 8μs execution
- ☐ Divide
  16-bit by 8-bit, 16-bit quotient, 8-bit remainder
  Less than 14μs execution
- ☐ Working register instructions for efficient RAM addressing, testing and manipulating
- ☐ Direct bit addressing for code-efficient addressing, testing and manipulating bits in RAM, port lines and mode registers

© IC MASTER 1984

Please refer to the section on μPD7811 for description of the following functions which are the same as on this device:

1. Memory expansion (except 56K bytes maximum for μPD7809)
2. Timer/event counter
3. USART
4. Interrupt structure
5. Standby function
6. Reset
7. External memory access and timing
8. Package information

Variable Threshold Input Port (Port T)

- ☐ 8 input lines
- ☐ 16 levels — from 1/16 of reference voltage (V_{TH}) to 16/16 V_{TH}
- ☐ Level selected by software write to Mode T register
- ☐ Input at Port bit reads 0 until voltage at pin exceeds selected level
- ☐ Comparison execution time: 12μs.

Block Diagram of Threshold Variable Input Port

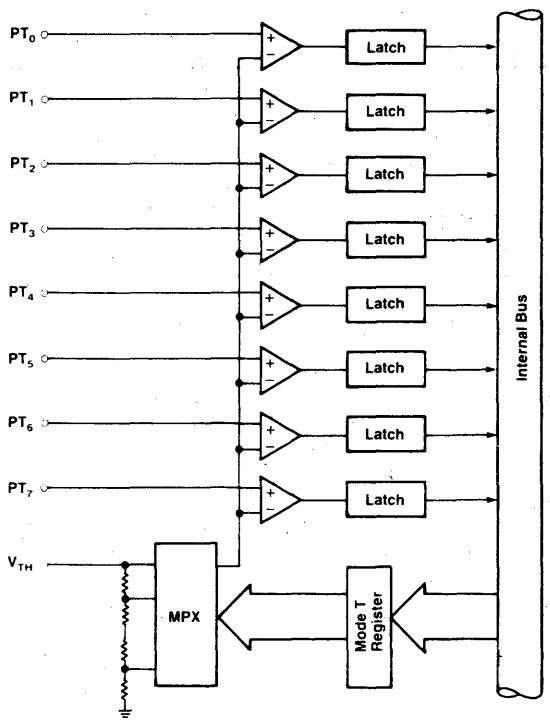

Input/Output

- ☐ 40 digital I/O lines — Five 8-bit ports (Port A, Port B, Port C, Port D, Port F)
- ☐ Port operation for Ports A, B, C, and F:
  Each line of these ports can be individually programmed as an input or as an output.
- ☐ Port D can be programmed as a byte input or a byte output.
- ☐ Control lines:
  Under software control, each line of Port C can be configured individually to provide control lines for serial interface, timer and timer/counter.

Block Diagram of Threshold Variable Port

Format of MODE T Register

7	6	5	4	3	2	1	0
–	–	–	–	MT_3	MT_2	MT_1	MT_0

Specification of 16 Threshold Levels

0	0	0	0	$V_{TH} \times 16/16$
0	0	0	1	$V_{TH} \times 1/16$
0	0	1	0	$V_{TH} \times 2/16$
0	0	1	1	$V_{TH} \times 3/16$
0	1	0	0	$V_{TH} \times 4/16$
0	1	0	1	$V_{TH} \times 5/16$
0	1	1	0	$V_{TH} \times 6/16$
0	1	1	1	$V_{TH} \times 7/16$
1	0	0	0	$V_{TH} \times 8/16$
1	0	0	1	$V_{TH} \times 9/16$
1	0	1	0	$V_{TH} \times 10/16$
1	0	1	1	$V_{TH} \times 11/16$
1	1	0	0	$V_{TH} \times 12/16$
1	1	0	1	$V_{TH} \times 13/16$
1	1	1	0	$V_{TH} \times 14/16$
1	1	1	1	$V_{TH} \times 15/16$

© IC MASTER 1984

Watchdog Timer

- ☐ Used for software safety check or overall performance safety check. Watchdog, if enabled, must be cleared at regular intervals in program execution to avoid watchdog interrupt. Intervals are software selectable.

Block Diagram for Watchdog Timer

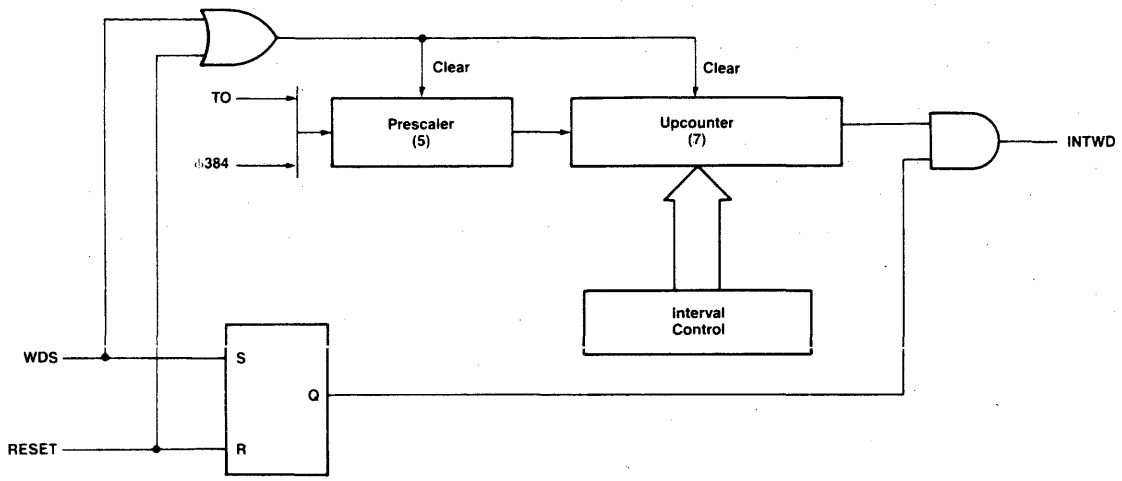

Note: $\phi 384 = f_{XTAL} \times 1/384$.

Bit Address Instructions

The following bits may be addressed directly with certain instructions:

- ☐ Any bit in a 16-byte group in RAM
- ☐ Any bit in the five 8-bit I/O ports (A, B, C, D, F)
- ☐ Any bit in the variable threshold port
- ☐ Any bit in the following special registers:
  9-bit interrupt mask register, serial mode register, timer mode register, timer/event counter output register

An addressed bit may be tested, set, cleared, or complemented.
An addressed bit may be moved to or from the carry flag.
An addressed bit may be ANDed, ORed, X-ORed with the carry flag.

Difference between the μPD7801, μPD7811, μPD7807, and μPD7809

		μPD7801	μPD7811	μPD7807	μPD7809
Number of Instructions		134	158	165	165
16-bit Operation Instruction		No	Yes	Yes	Yes
Multiply/Divide Instruction		No	Yes	Yes	Yes
Instruction Cycle		2μs/4MHz	1μs/12MHz	1μs/12MHz	1μs/12MHz
Number of General-purpose Registers		16	18	18	18
On-chip ROM Capacity		4K Bytes	4K Bytes	No	8K Bytes
On-chip RAM Capacity		128 Bytes	256 Bytes	256 Bytes	256 Bytes
Direct-Addressable External Memory Capacity		60K Bytes	60K Bytes	64K Bytes	56K Bytes
Interrupt Source	Internal	2	8	8	8
	External	3	3	3	3
I/O Lines		48	40+4	28*	40
Threshold Variable Port		No	No	8 Bits	8 Bits
Timer/Counter	Timer	12 Bits	8 Bits x 2	8 Bits x 2	8 Bits x 2
	Counter	No	16 Bits	16 Bits	16 Bits
Watchdog Timer		No	No	Yes	Yes
Serial Interface	Asynchronous	No	Yes	Yes	Yes
	Synchronous	No	Yes	Yes	Yes
	I/O Interface	Yes	Yes	Yes	Yes
A/D Converter		No	Yes	No	No
Standby Function		No	Yes	Yes	Yes
Hold Function		Yes	No	Yes	Yes
Technology		NMOS	NMOS	NMOS	NMOS
Package		64-Pin Flat	64-Pin QUIP	64-Pin QUIP	64-Pin QUIP

*: at 4K-byte Access

Package Outlines

For information, see Package Outline Section 7.

Plastic Quil, μPD7807G/09G
Plastic Shrinkdip, μPD7809CW/07CW

© IC MASTER 1984

μPD80C48/C35 CMOS 8-BIT SINGLE-CHIP MICROCOMPUTER

Description

The NEC μPD80C48 is a true stand-alone 8-bit microcomputer fabricated using CMOS technology. All of the functional blocks necessary for an integrated microcomputer are incorporated, including a 1K-byte ROM, a 64-byte RAM, 27 I/O lines, an 8-bit timer/event counter, and a clock generator. This integrated capability permits use in stand-alone applications. For designs requiring extra capability, the μPD80C48 can be expanded using peripherals and memory compatible with industry-standard 8080A/8085A processors. A version of the μPD80C48 without ROM is offered by the μPD80C35.

Providing compatibility with industry-standard 8048, 8748, and 8035 processors, the μPD80C48 features significant savings in power consumption. In addition to the power savings gained through CMOS technology, the μPD80C48 is distinct in offering two standby modes (Halt mode and Stop mode) to further minimize power drain.

Features

- ☐ 8-bit CPU with ROM, RAM, and I/O on a single chip
- ☐ Hardware/software-compatible with industry-standard 8048, 8748, and 8035 processors
- ☐ 1K x 8 ROM
- ☐ 64 x 8 RAM
- ☐ 27 I/O lines
- ☐ 2.5μs cycle time (6MHz crystal)
- ☐ All instructions executable in 1 or 2 cycles
- ☐ 97 instructions: 70 percent are single-byte instructions
- ☐ Internal timer/event counter
- ☐ 2 interrupts (an external interrupt and a timer interrupt)
- ☐ Easily expandable memory and I/O
- ☐ Bus compatible with 8080A/8085A peripherals
- ☐ Power-efficient CMOS technology requiring a single +2.5V to +5.5V power supply
- ☐ Available in 40-pin DIP, 44-pin flat pack, and 52-pin flat pack
- ☐ Halt mode
  - 1mA typical supply current
  - Maintenance of internal logic values and control states
  - Mode initialization via HALT instruction
  - Mode release via external interrupt or reset
- ☐ Stop mode
  - 1μA typical supply current
  - Disabling of internal clock generation and internal logic
  - Maintenance of RAM contents
  - Mode initialization via hardware (V_{DD})
  - Mode release via reset

Pin Identification

Pin No.	Symbol	Name	Function
1	T0	Test 0	Testable input using conditional jump instructions JT0 and JNT0. Also enables clock output via the ENTO CLK instruction.
2	XTAL1	Crystal 1	One of two inputs for external crystal oscillator or LC circuit to generate internal clock signals. May also be used as an input for external clock signals. (Non-TTL-compatible V_{IH}.)
3	XTAL2	Crystal 2	One of two inputs for external crystal oscillator or LC circuit to generate internal clock signals. (Non-TTL-compatible V_{IH}.)
4	$\overline{RESET}$	Reset	Active-low input line that initializes the processor. Also used to release both the Halt and Stop modes. ①
5	$\overline{SS}$	Single Step	Active-low input line, that, in conjunction with ALE, causes the processor to single-step through a program one instruction at a time.
6	$\overline{INT}$	Interrupt	Active-low input line that causes an interrupt if an enable instruction has been executed. A reset disables the interrupt. May be used as a testable input with a conditional jump instruction. Can also be used to release the Halt mode.
7	EA	External Access	Input line that inhibits internal program memory fetches and initiates access of external program memory. Essential for system testing and may also be used for program debugging.
8	$\overline{RD}$	Read	Active-low output strobe line that is used to read data from external data memory.
9	$\overline{PSEN}$	Program Store Enable	Active-low output line that is used to fetch instructions from external program memory.
10	$\overline{WR}$	Write	Active-low output strobe line that is used to write data into external data memory.
11	ALE	Address Latch Enable	Output line for address latch enable. At the falling edge of ALE, the address of either external data memory or external program memory is available on the bus.
12–19	DB_0–DB_7	Bus	These I/O lines constitute an 8-bit bidirectional data/address bus. Synchronous read and write operations can be performed on this bus using $\overline{RD}$ and $\overline{WR}$ signals. Data driven out on the bus by an OUTL BUS instruction is statically latched. The address of external memory is available on the bus at the falling edge of ALE when reading from external program memory or writing to and reading from external data memory. During external program memory fetches, the least-significant 8 bits of the external program memory address are driven out on the bus and the addressed instruction is fetched using $\overline{PSEN}$. When no external memory is used, the bus can serve as a true bidirectional 8-bit port. Information is strobed in or out by the $\overline{RD}$ and $\overline{WR}$ signals.
20	V_{SS}	Ground	Ground potential.
21–24, 35–38	P_{20}–P_{27}	Port 2	These lines constitute Port 2, an 8-bit quasi-bidirectional port. During external program memory fetches, P_{20}–P_{23} output the most-signficant 4 bits of the external program memory address. Lines P_{20}–P_{23} can also be used as a 4-bit I/O expander bus to interface with the optional μPD82C43 I/O expander.
25	PROG	Program Pulse	This line is used as an output strobe when interfacing with the optional μPD82C43 I/O expander.
26	V_{DD}	Oscillator Control Voltage Line	This input line is used to control oscillator stopping and restarting in Stop mode. Stop mode is enabled by forcing V_{DD} LOW during a reset.
27–34	P_{10}–P_{17}	Port 1	These lines constitute Port 1, an 8-bit, general-purpose quasi-bidirectional port.
39	T1	Test 1	Testable input using conditional jump instructions JT1 and JNT1. Can also be used as the timer/counter input line via the STRT CNT instruction.
40	V_{CC}	Primary Power Supply	Power supply. V_{CC} must be between +2.5V to +5.5V for normal operation. In Stop mode, V_{CC} must be at least +2V to ensure data retention.

Note: ① The pulse width of $\overline{RESET}$ must be a minimum of 5 machine cycles in length following oscillator stabilization to reinitialize the processor and stabilize CPU operation. At power-up, the states of the output lines are undefined until completion of reset.

Rev/1

© IC MASTER 1984

Pin Configuration

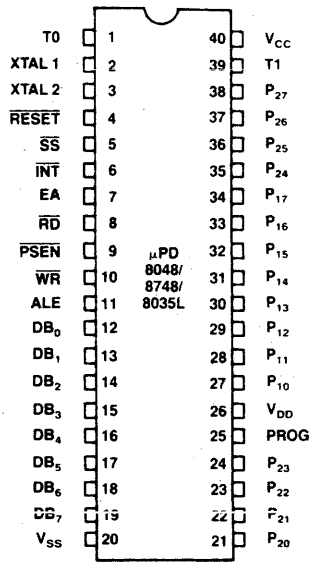

Standby Function

HALT mode

In Halt mode, the oscillator continues to operate, but the internal clock is disabled. The status of all internal logic just prior to execution of the HALT instruction is maintained by the CPU. In Halt mode, power consumption is less than 10 percent of normal μPD80C48 operation and less than 1 percent of normal 8048 operation.

The Halt mode is initiated by execution of the HALT instruction, and is released by either $\overline{INT}$ or $\overline{RESET}$ input.

$\overline{INT}$ input: When the $\overline{INT}$ pin receives a low-level input, if interrupts are enabled, the internal clock is restarted and the interrupt is executed after the first or second instruction following the HALT instruction. However, if interrupts are disabled, program operation is resumed from the next address following the HALT instruction. The first instruction following a HALT instruction should be a NOP instruction to ensure proper program execution.

If the Halt mode is released when interrupts are enabled, the interrupt service routine is usually executed after the first or second instruction following the release of Halt mode. However, if either a timer or external interrupt is accepted within one machine cycle prior to a HALT instruction, the corresponding timer or external interrupt service routine is executed immediately following the release of Halt mode. It is important to note this sequence of execution when considering interrupt service routine execution following a HALT instruction.

$\overline{RESET}$ input: When a low-level input is received by the $\overline{RESET}$ pin, Halt mode is released and the normal reset operation is activated, restarting program operation from address 0.

Stop mode

In Stop mode, the oscillator is deactivated and only the contents of RAM are maintained. The operation status of the μPD80C48 resembles that of a reset condition. Because only the contents of RAM are maintained, Stop mode provides even lower power consumption than Halt mode, only requiring a minimum V_{CC} as low as +2V.

Stop mode is initiated by setting V_{DD} to LOW when $\overline{RESET}$ is LOW, to protect the contents of RAM. Stop mode is released by first raising the supply voltage at the V_{CC} pin from standby level to correct operating level and setting V_{DD} to HIGH when $\overline{RESET}$ is LOW. After the oscillator has been restarted and the oscillation has stabilized, $\overline{RESET}$ must be set to HIGH, whereby program operation is started from address 0.

Stop Mode Circuit

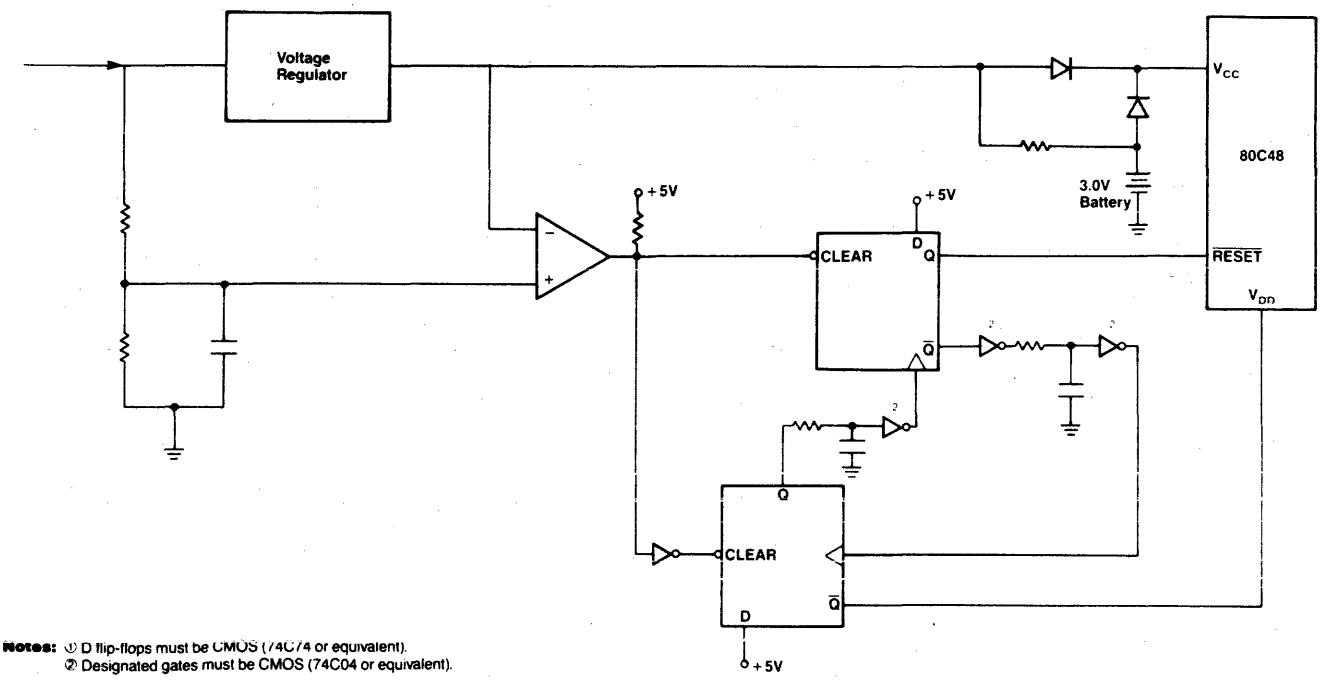

Notes: ① D flip-flops must be CMOS (74C74 or equivalent).
② Designated gates must be CMOS (74C04 or equivalent).

© IC MASTER 1984

Stop Mode Timing

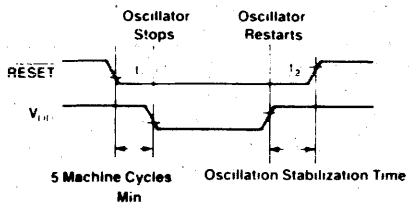

Stop Mode Circuit: Since V_{DD} controls the restarting of the oscillator, it is important that V_{DD} be protected from noise interference. The time required to reset the CPU is represented by t_1 (see Stop Mode Timing diagram), which is a minimum of 5 machine cycles. The reset operation will not be completed in less than 5 machine cycles. In Stop mode, it is important to note that if V_{DD} goes LOW before 5 machine cycles have elapsed, the CPU will be deactivated and the output of ALE, RD, WR, PSEN, and PROG will not have been stabilized.

Oscillation stabilization time is represented by t_2 (see Stop Mode Timing diagram). When V_{DD} goes HIGH, oscillator operation is reactivated, but it takes time before oscillation can be stabilized. In particular, such high Q resonators as crystals require longer periods to stabilize. Because there is a delay between restarting of the oscillator and oscillator stabilization, t_2 should be long enough to ensure that the oscillator has been fully stabilized.

To facilitate Stop mode control, an external capacitor can be connected to the $\overline{RESET}$ pin (see Stop Mode Control Circuit), affecting only t_2, allowing control of the oscillator stabilization time. When V_{DD} is asserted in Stop mode, the capacitor begins charging, pulling up $\overline{RESET}$. When $\overline{RESET}$ reaches a threshold level equivalent to a logic 1, Stop mode is released. The time it takes $\overline{RESET}$ to reach the threshold level of logic 1 determines the oscillator stabilization time, which is a function of the capacitance and pull-up resistance values.

Stop Mode Control Circuit

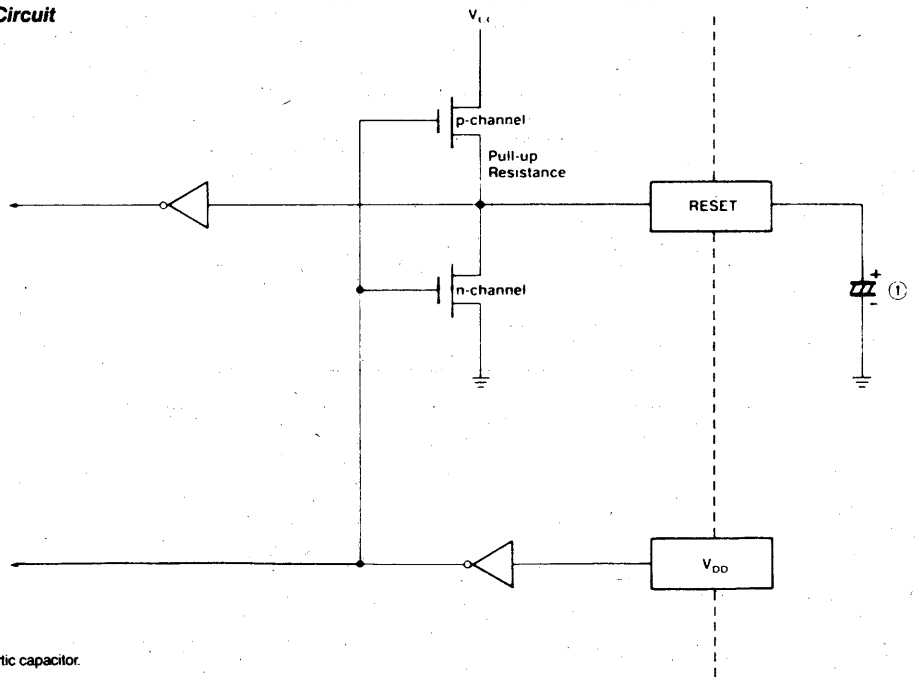

Note: ① Polarized electrolytic capacitor.

Port Operation

A port-loading option is offered at the time of ordering the mask. Individual source current requirements for Port 1 and the upper and lower halves of Port 2 may be factory set at either −5μA or −50μA (see Port-Loading Options table). The −50μA option is required for interfacing with TTL/NMOS devices. The −5μA option is recommended for interfacing to other CMOS devices. The CMOS option results in lower power consumption and greater noise immunity.

Port lines P_{10} to P_{17} and P_{24} to P_{27} include a protective circuit "E" to prevent a signal conflict at the port. The circuit prevents a logic 1 from being written to a line that is being pulled down externally (see Port Protection Circuit "E" diagram). When a logic 0 is detected at the port line and a logic 1 is written from the bus, the NOR gate sends a logic 1 to the D input of the flip-flop. The output is inverted, forcing the NAND gate to send a high-level output. This turns off transistor A, preventing the output of a logic 1 from the port.

Port-Loading Options

I_{OH} (min) V_{CC} = V_{DD} = 5V ± 10%; V_{OH} = 2.4V (min)

Option Selected	P_{10}–P_{17}	P_{20}–P_{23}	P_{24}–P_{27}	Unit
A	−5	−5	−5	μA
B	−50	−5	−5	μA
C	−5	−50	−5	μA
D	−50	−50	−5	μA
E	−5	−5	−50	μA
F	−50	−5	−50	μA
G	−5	−50	−50	μA
H	−50	−50	−50	μA

Notes: ① The selection of I_{OH} = −5μA will result in a port source current of I_{ILP} = −40μA max when used as input port.
② The selection of I_{OH} = −50μA will result in a port source current of I_{ILP} = −500μA max when used as input port.

© IC MASTER 1984

Oscillator Operation

The oscillator maintains an internal frequency for clock generation and controls all system timing cycles. The oscillation is initiated by either a self-generating external resonator or external clock input. The oscillator acts as a high-gain amplifier which produces square-wave pulses at the frequency determined by the resonator or clock source to which it is connected.

To obtain the oscillation frequency, an external LC network may be connected to the oscillator, or, a ceramic or crystal external resonator may be connected.

As the crystal frequency is lowered, there is an equivalent reduction in series resistance (R). As the temperature of the crystal is lowered, R is increased. Due to this relationship, it becomes difficult to stabilize oscillation when there is low power supply voltage. When V_{CC} is less than 2.7V and the oscillator frequency is 3MHz or less, T_a (ambient temperature) should not be less than −10°C.

Port Protection Circuit "E"

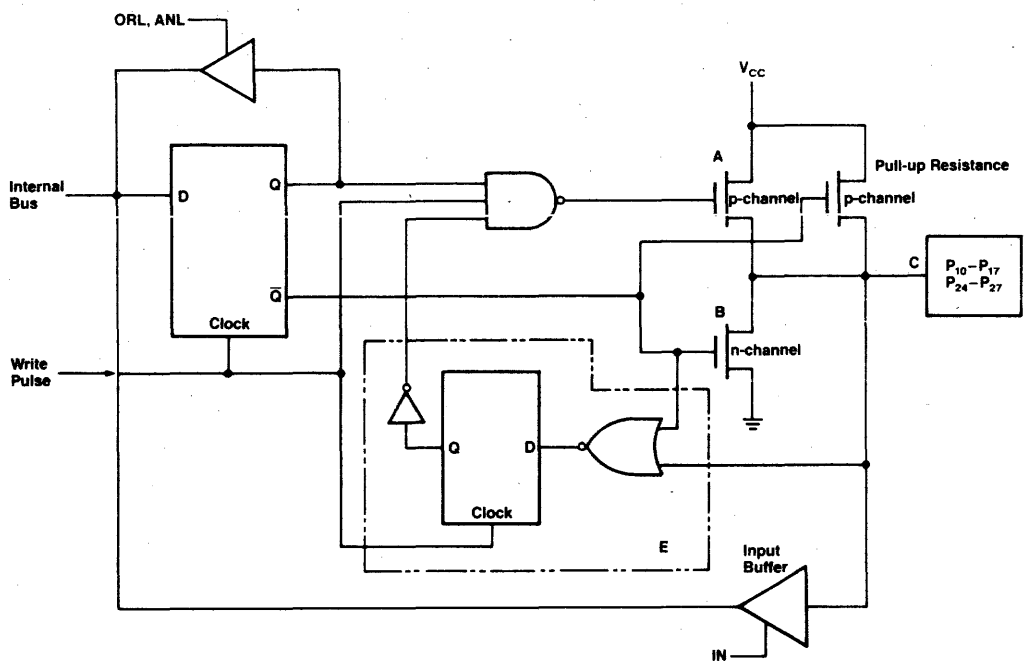

Crystal Frequency Reference Circuit

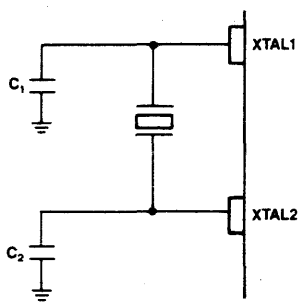

Notes: ① Crystal oscillator constants of f_{osc} = 6MHz
R_{max} = 50Ω
C_L = 16 ± 0.2pF
P = 1 ± 0.2mW

② Operating frequency less than 4MHz
$0 < C_1 \leq 20pF$
$0 < C_2 \leq 20pF$
$|C_2 - C_1| \leq 10pF$

③ Operating frequency more than 4MHz
$0 < C_1 \leq 10pF$
$0 < C_2 \leq 10pF$
$|C_2 - C_1| \leq 5pF$

LC Frequency Reference Circuit

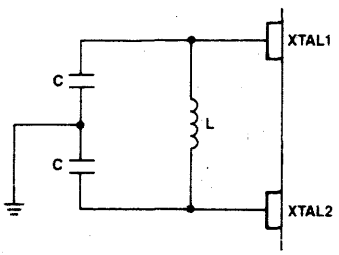

L	C	Nominal f
45μH	20pF	5.2MHz
120μH	20pF	3.2MHz

$$f \quad \frac{1}{2\pi\sqrt{LC}} \qquad C = \frac{C + 3C_{pp}}{2}$$

Note: C_{pp} = 5–10pF. Pin to pin capacitance should be approximately 20pF, including stray capacitance.

© IC MASTER 1984

Ceramic Resonator Frequency Reference Circuit

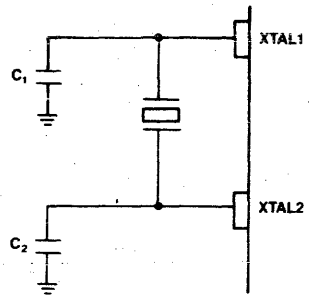

Note: $C_1 > C_2$
$|C_1 - C_2| \approx 20pF$
For example, C_1 = 30pF, and C_2 = 10pF.
Values of C_1 and C_2 do not include stray capacitance.

External Clock Frequency Reference Circuit

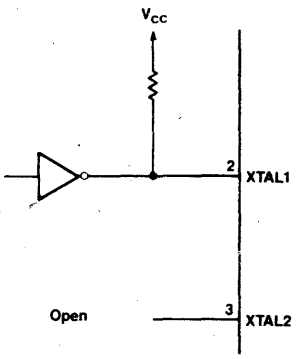

Note: A minimum voltage of V_{CC}-1 is required for XTAL1 to go HIGH.

Absolute Maximum Ratings*

T_a = 25°C	
Operating Temperature, T_{opt}	−40°C to +85°C
Storage Temperature (Cerdip Package), T_{stg}	−65°C to +150°C
Storage Temperature (Plastic Package), T_{stg}	−65°C to +125°C
Voltage on Any Pin, $V_{I/O}$	V_{SS} −0.3V to V_{CC} +0.3V
Supply Voltage, V_{CC}	V_{SS} −0.3 to +10V
Power Dissipation, P_D	0.35w

*COMMENT: Exposing the device to stresses above those listed in Absolute Maximum Ratings could cause permanent damage. The device is not meant to be operated under conditions outside the limits described in the operational sections of this specification. Exposure to absolute maximum rating conditions for extended periods may affect device reliability.

Major Input and Output Signals

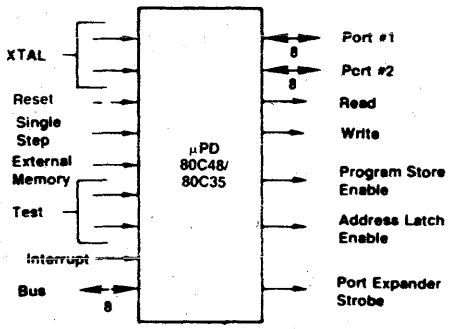

Instruction Set Symbol Definitions

Symbol	Description
A	Accumulator
AC	Auxiliary Carry Flag
addr	Program or data memory address (a_0–a_7) or (a_0–a_{10})
b	Accumulator bit (b = 0–7)
BS	Bank Switch
BUS	Bus
C	Carry Flag
CLK	Clock
CNT	Counter
data	8-bit binary data (d_0–d_7)
DBF	Memory Bank Flip-Flop
F0, F1	Flag 0, Flag 1
INT	Interrupt pin
n	Indicates the hex number of the specified register or port
PC	Program Counter
P_p	Port 1, Port 2, or Port 4–7 ($_p$ = 1, 2, or 4–7)
PSW	Program Status Word
R_r	Register R_0–R_7 ($_r$ = 0–7)
SP	Stack Pointer
T	Timer
TF	Timer Flag
T0, T1	Test 0, Test 1 pin
#	Immediate data indication
@	Indirect address indication
x	Indicates the hex number corresponding to the accumulator bit or page number specified in the operand
(x)	Contents of RAM
((x))	Contents of memory addressed by (x)
←	Transfer direction, result
∧	Logical product (logical AND)
∨	Logical sum (logical OR)
⊻	Exclusive OR
—	Complement

© IC MASTER 1984

DC Characteristics: Standard Voltage Range

T_a = −40°C to +85°C; V_{CC} = +5V ± 10%; V_{SS} = 0V

Parameter	Symbol	Limits Min	Limits Typ	Limits Max	Unit	Test Conditions
Input Low Voltage	V_{IL}	−0.3		0.8	V	
Input High Voltage	V_{IH}	V_{CC}−2		V_{CC}	V	All except XTAL1, XTAL2, $\overline{RESET}$
	V_{IH1}	V_{CC}−1		V_{CC}	V	$\overline{RESET}$, XTAL1, XTAL2
Output Low Voltage	V_{OL}			0.45	V	I_{OL} = 2.0mA
Output High Voltage	V_{OH}	2.4			V	Bus, $\overline{RD}$, $\overline{WR}$, $\overline{PSEN}$, ALE, PROG, T0; I_{OH} = −100μA
	V_{OH1}①	2.4			V	Port 1, Port 2; I_{OH} = −5μA (Type 0)
						Port 1, Port 2; I_{OH} = −50μA (Type 1)
	V_{OH2}	V_{CC}−0.5			V	All outputs; I_{OH} = −0.2μA
Input Current	I_{ILP}①		−15	−40	μA	Port 1, Port 2; $V_{IN} \le V_{IL}$ (Type 0)
				−500	μA	Port 1 Port 2; $V_{IN} \le V_{IL}$ (Type 1)
	I_{ILC}			−40	μA	$\overline{SS}$, $\overline{RESET}$; $V_{IN} \le V_{IL}$
Input Leakage Current	I_{LI1}			±1	μA	T1, $\overline{INT}$, V_{DD}; $V_{SS} \le V_{IN} \le V_{CC}$
	I_{LI2}			±3	μA	EA; $V_{SS} \le V_{IN} \le V_{CC}$
Output Leakage Current	I_{LO}			±1	μA	Bus, T0, High-Impedance State; $V_{SS} \le V_O \le V_{CC}$
Standby Current	I_{CC1}		0.4	0.8	mA	Halt mode; t_{CY} = 2.5μs
	I_{CC2}		1	20	μA	Stop mode②
Supply Current	I_{CC}		4	8	mA	t_{CY} = 2.5μs
Data Retention Voltage	V_{CCDR}	2.0			V	Stop mode (V_{DD}, $\overline{RESET}$ ≥ 0.4V)

DC Characteristics: Extended Voltage Range

T_a = −40°C to +85°C; V_{CC} = +2.5V to +5.5V; V_{SS} = 0V

Parameter	Symbol	Limits Min	Limits Typ	Limits Max	Unit	Test Conditions
Input Low Voltage	V_{IL}	−0.3		0.18 V_{CC}	V	
Input High Voltage (All Except XTAL 1, XTAL 2)	V_{IH}	0.7V_{CC}		V_{CC}	V	
Input High Voltage (XTAL 1, XTAL 2)	V_{IH1}	0.8V_{CC}		V_{CC}	V	
Output Low Voltage	V_{OL}			0.45	V	I_{OL} = 1.0mA
Output High Voltage (Bus, $\overline{RD}$, $\overline{WR}$, $\overline{PSEN}$, ALE, PROG, T0	V_{OH}	0.75V_{CC}			V	I_{OH} = −100μA
Output High Voltage (All Other Outputs	V_{OH1}	0.7V_{CC}			V	Port 1, Port 2; I_{OH} = −1μA (Type 0)
						Port 1, Port 2; I_{OH} = −10μA (Type 1)
Output High Voltage (All Outputs)	V_{OH2}	V_{CC} − 0.5			V	I_{OH} = −0.2μA
Input Leakage Current (Port 1, Port 2)	I_{ILP}		−15	−40	μA	$V_{IN} \le V_{IL}$ (Type 0)
				−500	μA	$V_{IN} \le V_{IL}$ (Type 1)
Input Leakage Current ($\overline{SS}$, $\overline{RESET}$)	I_{ILC}			−40	μA	$V_{IN} \le V_{IL}$
Input Leakage Current (T1, $\overline{INT}$)	I_{IL1}			±1	μA	$V_{SS} \le V_{IN} \le V_{CC}$
Input Leakage Current (EA)	I_{IL2}			±3	μA	$V_{SS} \le V_{IN} \le V_{CC}$
Output Leakage Current (Bus, T0 — High Impedance State)	I_{OL}			±1	μA	$V_{SS} \le V_O \le V_{CC}$
Supply Current	I_{CC}		0.8	1.6	mA	V_{CC} = 3V, t_{CY} = 10μs
Halt Mode Standby Current	I_{CC1}		100	200	μA	V_{CC} = 3V, t_{CY} = 10μs
Stop Mode Standby Current	I_{CC2}		1	20	μA	

Notes: ① Type 0 and type 1 options apply only to the μPD80C48; the μPD80C35 is type 1 only.
② Input Pin Voltage is V_{IN}, V_{IL}, or V_{IN}, V_{IH}.

AC Characteristics

Read, Write and Instruction Fetch: External Data and Program Memory

T_a = −40°C to +85°C; V_{CC} = V_{DD} = +5V ± 10%; V_{SS} = 0V

Parameter	Symbol	V_{CC} = +5V ± 10% Min	Typ	Max	V_{CC} = +2.5V to +5.5V Min	Typ	Max	Unit	Test Conditions
ALE Pulse Width	t_{LL}	400			2160			ns	
Address Setup before ALE	t_{AL}	120			1620			ns	
Address Hold from ALE	t_{LA}	80			330			ns	①
Control Pulse Width ($\overline{PSEN}$, $\overline{RD}$, $\overline{WR}$)	t_{CC}	700			3700			ns	
Data Setup before $\overline{WR}$	t_{DW}	500			3500			ns	
Data Hold after $\overline{WR}$	t_{WD}	120			370			ns	②
Cycle Time	t_{CY}	2.5		150	10		150	μs	6MHz XTAL
Data Hold	t_{DR}	0		200	0		950	ns	
$\overline{PSEN}$, $\overline{RD}$ to Data In	t_{RD}			500			2750	ns	
Address Setup before $\overline{WR}$	t_{AW}	230			3230			ns	①
Address Setup before Data In	t_{AD}			950			5450	ns	
Address Float to $\overline{RD}$, $\overline{PSEN}$	t_{AFC}	0			500			ns	
Control Pulse to ALE	t_{CA}	10			10			ns	

© IC MASTER 1984

Port 2 Timing
T_a = −40°C to +85°C; V_{CC} = +5V ± 10%

Parameter	Symbol	V_{CC} = +5V ± 10% Min	Typ	Max	V_{CC} = +2.5V to +5.5V Min	Typ	Max	Unit	Test Conditions
Port Control Setup before Falling Edge of PROG	t_{CP}	110			860			ns	
Port Control Hold after Falling Edge of PROG	t_{PC}	0		80	0		200	ns	④
PROG to Time P2 input must be Valid	t_{PR}			810			5310	ns	
Output Data Setup Time	t_{DP}	250			3250			ns	③
Output Data Hold Time	t_{PD}	65			820			ns	
Input Data Hold Time	t_{PF}	0		150	0		900	ns	
PROG Pulse Width	t_{PP}	1200			6450			ns	
Port 2 I/O Data Setup	t_{PL}	350			2100			ns	
Port 2 I/O Data Hold	t_{LP}	150			1400			ns	

Notes: ① For Control Outputs: C_L = 80pF; for Bus Outputs: C_L = 150pF
② C_L = 20pF
③ For Control Outputs: C_L = 80pF
④ Refer to the operating characteristic curves for Supply Voltage and Port Control Hold.

Block Diagram

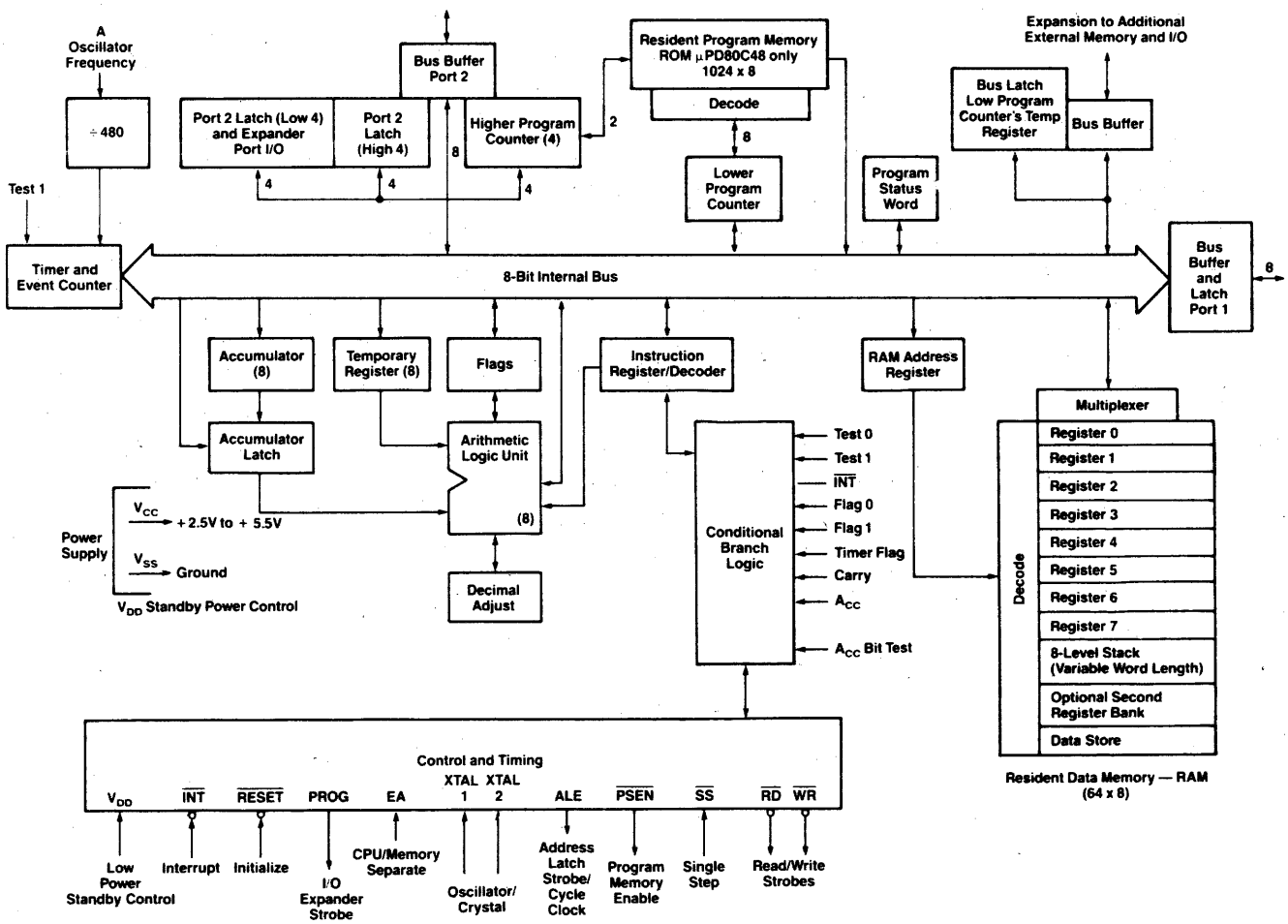

Note: μPD80C35 does not include ROM.

© IC MASTER 1984

μPD7500 SERIES CMOS 4-BIT SINGLE-CHIP MICROCOMPUTER FAMILY

Description

The μPD7500 Series CMOS 4-Bit Single Chip Microcomputer Family is a broad product line of 16 individual devices designed to fulfill a wide variety of applications. The advanced 4th generation architecture includes all of the functional blocks necessary for a single chip controller, including an ALU, Accumulator, Program Memory (ROM), Data Memory (RAM), four General Purpose Registers, Stack Pointer, Program Status Word (PSW), 8-Bit Timer/Event Counter, Interrupt Controller, Display Controller/Driver, and 8-Bit Serial Interface. The instruction set maximizes the efficient utilization of fixed Program Memory space, and includes a variety of addressing, Table-Look-up, Logical, Single Bit Manipulation, vectored jump, and Condition Skip instructions.

The μPD7500 Series includes four different devices, the μPD7501, μPD7502, μPD7503, and μPD7514, capable of directly driving Liquid Crystal Displays with up to 16 7-segment digits. The μPD7508A, μPD7528, μPD7517, μPD7538, μPD7537, and μPD7519 can directly drive up to 35V Vacuum Fluorescent Displays with up to 8 7-segment digits, and the μPD7519 can directly drive up to 35V Vacuum Fluorescent Displays with up to 16 7-segment digits.

All 16 devices are manufactured with a Silicon gate CMOS process, consuming only 900μA max at 5V, and only 400μA max at 3V. The HALT and STOP power-down instructions can significantly reduce power consumption even further.

The flexibility and the wide variety of μPD7500 Series devices available make the μPD7500 series ideally suited for a wide range of battery-powered, solar-powered, and portable products, such as telecommunication devices, hand-held instruments and meters, automotive products, industrial controls, energy management systems, medical instruments, portable terminals, portable measuring devices, appliances, and consumer products.

Features

- ☐ Advanced 4th Generation Architecture
- ☐ Choice of 8-Bit Program Memory (ROM) size:
  - 1K, 2K, 4K internal, or 8K external bytes
- ☐ Choice of 4-Bit Data Memory (RAM) size:
  - 64, 96, 128, 208, 224, or 256 internal nibbles
- ☐ RAM Stack
- ☐ Four General Purpose Registers: D, E, H, and L
  - Can address Data Memory and I/O ports
  - Can be stored to or retrieved from Stack
- ☐ Powerful Instruction Set
  - From 58 to 110 instructions, including:
    - Direct/indirect addressing
    - Table Look-up
    - RAM Stack Push/Pop
    - Single byte subroutine calls
    - RAM and I/O port single bit manipulation
    - Accumulator and I/O port Logical operations
    - 10 μs Instruction Cycle Time, typically
- ☐ Extensive General Purpose I/O Capability
  - One 4-Bit Input Port
  - Two 4-Bit latched tri-state Output Ports
  - Five 4-Bit input/latched tri-state Output Ports
  - Easily expandable with μPD82C43 CMOS I/O Expander
  - 8-Bit Parallel I/O capability
- ☐ Hardware Logic Blocks — Reduce Software Requirements
  - Operation completely transparent to instruction execution
  - 8-Bit Timer/Event Counter
    - Binary-up counter generates INT_T at coincidence
    - Accurate Crystal Clock or External Event operation possible
  - Vectored, Prioritized Interrupt Controller
    - Three external interrupts (INT_0, INT_1, INT_2)
    - Two internal interrupts (INT_T, INT_S)
  - Display Controller/Driver
    - Complete Direct Drive and Control of Multiplexed LCD or Vacuum Fluorescent Display
    - Display Data automatically multiplexed from RAM to dedicated segment/backplane/digit driver lines
  - 8-Bit Serial Interface
    - 3-line I/O configuration generates INT_S upon transmission of eighth bit
    - Ideal for distributed intelligence systems or communication with peripheral devices
  - Complete operation possible in HALT and STOP power-down modes
- ☐ Built-in System Clock Generator
- ☐ Built-in Schmidt-Trigger RESET Circuitry
- ☐ Single Power Supply, Variable from 2.7V to 5.5V
- ☐ Low Power Consumption Silicon Gate CMOS Technology
  - 900 μA max at 5V, 400 μA max at 3V
  - HALT, STOP Power-down instructions reduce power consumption to 20 μA max at 5V, 10μA at 3V (Stop mode)
- ☐ Extended −40°C to +85°C Temperature Range Available
- ☐ Choice of 28-pin, 40-pin, 42-pin dual-in-line packages, or 52-pin, 64-pin, or 80-pin flat plastic packages.

© IC MASTER 1984

Instruction Set

The μPD7500 Series Instruction Set consists of 110 powerful instructions designed to take full advantage of the advanced μPD7500 architecture in your application. It is divided into two subsets, according to the complexity of the device.

Instruction Set "A" is available for the higher-performance μPD7500 Series devices having either a 2K × 8-bit or a 4K × 8-bit Program Memory. It can be used with the μPD7500, μPD7502, μPD7503, μPD7507, μPD7507S, μPD7508, μPD7508A, μPD7519, μPD7514, μPD7527, μPD7528, μPD7537, and μPD7538 products.

Instruction Set "B" is available for the lower-cost μPD7500 Series devices having a 1K × 8-bit Program Memory. Its instructions are a compatible subset of Instruction Set "A," and can be used with the μPD7500, μPD7501, and μPD7506 products.

Instruction Set Symbol Definitions

The following abbreviations are used in the description of the μPD7500 Series Instruction sets:

Symbol	Explanation and Use
A	Accumulator
A_n	Bit "n" of Accumulator
addr	Address
bit	Operand specifying one bit of a nibble
B_n	Bit "n" of two-bit operand B_1 B_0 Bit Specified 0 0 Bit 0 (LSB) 0 1 Bit 1 1 0 Bit 2 1 1 Bit 3 (MSB)
Bank	Bank Flag of PSW (μPD7500 only)
borrow	Resulting value is less than 0H
C	Carry Flag
data	Immediate data operand
D	D Register
D_n	Bit "n" of immediate data operand
DE	DE Register Pair
DL	DL Register Pair
E	E Register
H	H Register
HL	HL Register Pair
IER	Interrupt Enable Register IER bit: 0 1 2 3 Interrupt: INT_T $INT_{0/S}$ INT_1 INT_2
IME	Interrupt Master Enable F/F
INT_n	Interrupt "n"
IRF_n	Interrupt Request Flag "n"
L	L Register
overflow	Resulting value is greater than FH
P( )	Parallel Input/Output Port addressed by the value within the parentheses
PC	Program Counter
PC_n	Bit "n" of Program Counter
PSW	Program Status Word PSW bit: 0 1 2 3 Flag: Carry Bank SK_0 SK_1
rp	Register Pair, specified by the 3-bit immediate data operand D_{2-0}, as follows: D_2 D_1 D_0 rp Additional Action 0 0 0 DL none (instruction set "A" only) 0 0 1 DE none (instruction set "A" only) 1 0 0 HL− decrement L; skip if L = FH 1 0 1 HL+ increment L; skip if L = OH 1 1 0 HL none
S	Skip Cycles: 0 when skip condition does not occur 1 when skip condition does occur
SIO	Serial I/O Shift Register
SIOCR	Serial I/O Count Register
SP	Stack Pointer
String	String Effect; in a string of similar instructions, only the first encountered is executed; the remainder of the instructions in the string are executed as NOP instructions
taddr	Operand specifying ROM Table Data
T_n	Bit "n" of ROM Table Data
TCR	Timer Counter Register
TMR	Timer Modulo Register
( )	The contents of the RAM location addressed by the value within the parentheses
[ ]	The contents of the ROM location addressed by the value within the brackets
←	Load, Store, or Transfer right operand into left operand
↔	Exchange the left and right operands
NOT	Logical NOT (One's complement)
AND	LOGICAL AND
OR	LOGICAL OR
XOR	LOGICAL Exclusive OR
	Instruction pertains to μPD7500 only

Instruction Set "A"

For the μPD7500, μPD7502, μPD7503, μPD7507, μPD7507S, μPD7508, μPD7508A, and μPD7519 devices only

Mnemonic	Function	Description	Instruction Code D_7	D_6	D_5	D_4	D_3	D_2	D_1	D_0	HEX	Bytes	Cycles	Skip Condition
			Load											
LADR addr	$A \leftarrow (D_{7-0})$	Load Accumulator from directly addressed RAM	0 D_7	0 D_6	1 D_5	1 D_4	1 D_3	0 D_2	0 D_1	0 D_0	38 00-FF	2	2	
LAI data	$A \leftarrow D_{3-0}$	Load Accumulator with immediate data	0	0	0	1	D_3	D_2	D_1	D_0	10-1F	1	1	String
LAM rp	$A \leftarrow (rp)$ rp = DL, DE, HL−, HL+, HL if rp = HL−, skip if borrow if rp = HL+, skip if overflow	Load Accumulator from Memory, possible skip	0	1	0	D_2	0	0	D_1	D_0	40, 41 50-52	1	1+S	See explanation of "rp" in symbol definitions
LAMT (μPD7500, μPD7502 only)	ROM addr = PC_{10-6}, 0, C, A_{3-0} $A \leftarrow [\text{ROM addr}]_{7-4}$ $(HL) \leftarrow [\text{ROM addr}]_{3-0}$	Load Accumulator and Memory from Table	0	1	0	1	1	1	1	0	5E	1	2	
LAMTL (μPD7500, μPD7503, μPD7507, μPD7507S, μPD7508, μPD7508A, μPD7519, only)	ROM addr = PC_{11-8}, A_{3-0}, $(HL)_{3-0}$ $A \leftarrow [\text{ROM addr}]_{7-4}$ $(HL) \leftarrow [\text{ROM addr}]_{3-0}$	Load Accumulator and Memory from Table Long	0 0	0 0	1 1	1 1	1 0	1 1	1 0	1 0	3F 34	2	2	
LDEI data	$D \leftarrow D_{7-4}$ $E \leftarrow D_{3-0}$	Load DE register pair with immediate data	0 D_7	1 D_6	0 D_5	0 D_4	1 D_3	1 D_2	1 D_1	1 D_0	4F 00-FF	2	2	
LDI data	$D \leftarrow D_{3-0}$	Load D register with immediate data	0 0	0 0	1 1	1 0	1 D_3	1 D_2	1 D_1	0 D_0	3E 20-2F	2	2	
LEI data	$E \leftarrow D_{3-0}$	Load E register with immediate data	0 0	0 0	1 0	1 0	1 D_3	1 D_2	1 D_1	0 D_0	3E 00-0F	2	2	
LHI data	$H \leftarrow D_{3-0}$	Load H register with immediate data	0 0	0 0	1 1	1 1	1 D_3	1 D_2	1 D_1	0 D_0	3E 30-3F	2	2	
LHLI data	$H \leftarrow D_{7-4}$ $L \leftarrow D_{3-0}$	Load HL register pair with immediate data	0 D_7	1 D_6	0 D_5	0 D_4	1 D_3	1 D_2	1 D_1	0 D_0	4E 00-FF	2	2	String
LHLT taddr	ROM addr = 0C0H + D_{3-0} $H \leftarrow [\text{ROM addr}]_{7-4}$ $L \leftarrow [\text{ROM addr}]_{3-0}$	Load HL register pair from ROM Table	1	1	0	0	D_3	D_2	D_1	D_0	C0-CF	1	2	String
LLI data	$L \leftarrow D_{3-0}$	Load L register with immediate data	0 0	0 0	1 0	1 1	1 D_3	1 D_2	1 D_1	0 D_0	3E 10-1F	2	2	
			Store											
ST	$(HL) \leftarrow A$	Store A to Memory	0	1	0	1	0	1	1	1	57	1	1	
			Transfer											
TAD	$D \leftarrow A$	Transfer A to D	0 1	0 0	1 1	1 0	1 1	1 0	1 1	0 0	3E AA	2	2	
TAE	$E \leftarrow A$	Transfer A to E	0 1	0 0	1 0	1 0	1 1	1 0	1 1	0 0	3E 8A	2	2	
TAH	$H \leftarrow A$	Transfer A to H	0 1	0 0	1 1	1 1	1 1	1 0	1 1	0 0	3E BA	2	2	
TAL	$L \leftarrow A$	Transfer A to L	0 1	0 0	1 0	1 1	1 1	1 0	1 1	0 0	3E 9A	2	2	
TDA	$A \leftarrow D$	Transfer D to A	0 1	0 0	1 1	1 0	1 1	1 0	1 1	0 1	3E AB	2	2	
TEA	$A \leftarrow E$	Transfer E to A	0 1	0 0	1 0	1 0	1 1	1 0	1 1	0 1	3E 8B	2	2	
THA	$A \leftarrow H$	Transfer H to A	0 1	0 0	1 1	1 1	1 1	1 0	1 1	0 1	3E BB	2	2	
TLA	$A \leftarrow L$	Transfer L to A	0 1	0 0	1 0	1 1	1 1	1 0	1 1	0 1	3E 9B	2	2	
			Exchange											
XAD	$A \leftrightarrow D$	Exchange A with D	0	1	0	0	1	0	1	0	4A	1	1	
XADR addr	$A \leftrightarrow (D_{7-0})$	Exchange A with directly addressed RAM	0 D_7	0 D_6	1 D_5	1 D_4	1 D_3	0 D_2	0 D_1	1 D_0	39 00-FF	2	2	
XAE	$A \leftrightarrow E$	Exchange A with E	0	1	0	0	1	0	1	1	4B	1	1	
XAH	$A \leftrightarrow H$	Exchange A with H	0	1	1	1	1	0	1	0	7A	1	1	
XAL	$A \leftrightarrow L$	Exchange A with L	0	1	1	1	1	0	1	1	7B	1	1	
XAM rp	$A \leftrightarrow (rp)$ rp = DL, DE, HL−, HL+, HL if rp = HL−, skip if borrow if rp = HL+, skip if overflow	Exchange A with Memory, Possible Skip	0	1	0	D_2	0	1	D_1	D_0	44, 45 54-56	1	1+S	See explanation or "rp" in symbol definitions
XHDR addr	$H \leftrightarrow (D_{7-0})$	Exchange H with directly addressed RAM	0 D_7	0 D_6	1 D_5	1 D_4	1 D_3	0 D_2	1 D_1	0 D_0	3A 00-FF	2	2	
XLDR addr	$L \leftrightarrow (D_{7-0})$	Exchange L with directly addressed RAM	0 D_7	0 D_6	1 D_5	1 D_4	1 D_3	0 D_2	1 D_1	1 D_0	3B 00-FF	2	2	

© IC MASTER 1984

Instruction Set "A" (Cont.)

For the μPD7500, μPD7502, μPD7503, μPD7507, μPD7507S, μPD7508, μPD7508A, and μPD7519 devices only

Mnemonic	Function	Description	Instruction Code D_7	D_6	D_5	D_4	D_3	D_2	D_1	D_0	HEX	Bytes	Cycles	Skip Condition
			Arithmetic											
ACSC	A, C←A+(HL)+C skip if carry	Add with carry; skip if carry	0	1	1	1	1	1	0	0	7C	1	1+S	Carry = 1
ADSC	A←A + D	Add D to A, skip if overflow	0 1	0 0	1 1	1 0	1 1	1 0	1 0	0 1	3E A9	2	2+S	Overflow
AESC	A←A + E	Add E to A, skip if overflow	0 1	0 0	1 0	1 0	1 1	1 0	1 0	0 1	3E 59	2	2+S	Overflow
AHSC	A←A + H	Add H to A, skip if overflow	0 1	0 0	1 1	1 1	1 1	1 0	1 0	0 1	8E B9	2	2+S	Overflow
AISC data	A←A + D_{3-0} skip if overflow	Add immediate skip if overflow	0	0	0	0	D_3	D_2	D_1	D_0	00-0F	1	1+S	Overflow
ALSC	A←A + L	Add H to A, skip if overflow	0 1	0 0	1 0	1 1	1 1	1 0	1 0	0 1	3E 99	2	2+S	Overflow
ASC	A←A + (HL) skip if overflow	Add memory; skip if overflow	0	1	1	1	1	1	0	1	7C	1	1+S	Carry = 1
SDSB	A←A − D skip if borrow	Subtract D from A, skip if borrow	0 1	0 0	1 1	1 0	1 1	1 0	1 0	0 0	3E A8	2	2+S	Borrow
SESB	A←A − E skip if borrow	Subtract E from A, skip if borrow	0 1	0 0	1 0	1 0	1 1	1 0	1 0	0 0	3E 88	2	2+S	Borrow
SHSB	A←A − H	Subtract H from A, skip if borrow	0 1	0 0	1 1	1 1	1 1	1 0	1 0	0 0	3E B8	2	2+S	Borrow
SLSB	A←A − L	Subtract L from A, skip if borrow	0 1	0 0	1 0	1 1	1 1	1 0	1 0	1 0	3E 98	2	2+S	Borrow
			Logical											
ANL	A←A AND (HL)	AND Accumulator and Memory	0 1	0 0	1 1	1 1	1 0	1 0	1 1	1 0	3F B2	2	2	
EXL	A←A XOR (HL)	Exclusive-Or Accumulator and Memory	0	1	1	1	1	1	1	0	7E	1	1	
ORL	A←A OR (HL)	OR Accumulator and Memory	0 1	0 0	1 1	1 1	1 0	1 1	1 1	1 0	3F B6	2	2	
			Accumulator											
CMA	A←NOT A	Complement Accumulator	0	1	1	1	1	1	1	1	7F	1	1	
RAL	C←A_3 A_3←A_2 A_2←A_1 A_1←A_0 A_0←C (old)	Rotate Accumulator left through Carry	0 1	0 0	1 1	1 1	1 0	1 1	1 1	1 1	3F B7	2	2	
RAR	C←A_0 A_0←A_1 A_1←A_2 A_2←A_3 A_3←C (old)	Rotate Accumulator right through Carry	0 1	0 0	1 1	1 1	1 0	1 0	1 1	1 1	3F B3	2	2	
			Program Status Word											
RC	C←0	Reset Carry	0	1	1	1	1	0	0	0	78	1	1	
SC	C←1	Set Carry	0	1	1	1	1	0	0	1	79	1	1	
			Increment and Decrement											
DDE	DE←DE − 1	Decrement DE	0 1	0 0	1 0	1 0	1 1	1 1	1 0	0 0	3E 8C	2	2	
DDRS addr	(D_{7-0})←(D_{7-0}) − 1 skip if (D_{7-0}) = FH	Decrement directly addressed RAM; skip if borrow	0 D_7	0 D_6	1 D_5	1 D_4	1 D_3	1 D_2	0 D_1	0 D_0	3C 00-FF	2	2+S	(D_{7-0}) = FH
DES	E←E − 1 skip if E = FH	Decrement E; skip if borrow	0	1	0	0	1	0	0	0	48	1	1+S	E = FH
DHL	HL←HL − 1	Decrement HL	0 1	0 0	1 0	1 1	1 1	1 1	1 0	0 0	3E 9C	2	2	
DLS	L←L − 1 skip if L = FH	Decrement L; skip if borrow	0	1	0	1	1	0	0	0	58	1	1+S	L = FH
IDE	DE←DE + 1	Increment DE	0 1	0 0	1 0	1 0	1 1	1 1	1 0	0 1	3E 8D	2	2	
IDRS addr	(D_{7-0})←(D_{7-0}) − 1 skip if (D_{7-0}) = 0H	Increment directly addressed; skip if overflow	0 D_7	0 D_6	1 D_5	1 D_4	1 D_3	1 D_2	0 D_1	1 D_0	3D 00-FF	2	2+S	(D_{7-0}) = 0H
IES	E←E + 1 skip if E = 0H	Increment E; skip if overflow	0	1	0	0	1	0	0	1	49	1	1+S	E = 0H
IHL	HL←HL + 1	Increment HL	0 1	0 0	1 0	1 1	1 1	1 1	1 0	0 1	3E 9D	2	2	
ILS	L←L + 1 skip if L = 0H	Increment L; skip if overflow	0	1	0	1	1	0	0	1	59	1	1+S	L = 0H 1
			Bit Manipulation											
RMB bit	(HL)$_{bit}$←0 bit = B_{1-0} (0-3)	Reset Memory bit	0	1	1	0	1	0	B_1	B_0	68-6B	1	1	
SMB bit	(HL)$_{bit}$←1 bit = B_{1-0} (0-3)	Set Memory bit	0	1	1	0	1	1	B_1	B_0	6C-6F	1	1	

© IC MASTER 1984

Instruction Set "A" (Cont.)

For the μPD7500, μPD7502, μPD7503, μPD7507, μPD7507S, μPD7508, μPD7508A, and μPD7519 devices only

Mnemonic	Function	Description	Instruction Code D_7	D_6	D_5	D_4	D_3	D_2	D_1	D_0	HEX	Bytes	Cycles	Skip Condition
			Branch											
CALL addr	$(SP-1)\leftarrow PC_{7-4}$ $(SP-2)\leftarrow PC_{3-0}$ $(SP-3)\leftarrow PSW$ $(SP-4)\leftarrow PC_{11-18}$ $SP\leftarrow SP-4$ $BANK\leftarrow 0$ $PC_{11}\leftarrow 0$ $PC_{10-0}\leftarrow D_{10-0}$	Call subroutine	0 D_7	0 D_6	1 D_5	1 D_4	0 D_3	D_{10} D_2	D_9 D_1	D_8 D_0	30-37 00-FF	2	2	
CALT addr	$(SP-1)\leftarrow PC_{7-4}$ $(SP-2)\leftarrow PC_{3-0}$ $(SP-3)\leftarrow PSW$ $(SP-4)\leftarrow PC_{11-8}$ ROM addr = $0C0H+D_{5-0}$ $BANK\leftarrow 0$ $PC_{11-10}\leftarrow 00$ $PC_{9-7}\leftarrow$[ROM addr]$_{7-5}$ $PC_{6-5}\leftarrow 00$ $PC_{4-0}\leftarrow$[ROM addr]$_{4-0}$	Call subroutine through ROM Table (single byte)	1	1	D_5	D_4	D_3	D_2	D_1	D_0	D0-FF	1	2	
JAM data	$PC_{11-8}\leftarrow D_{3-0}$ $PC_{7-4}\leftarrow A$ $PC_{3-0}\leftarrow (HL)$	Vectored Jump on Accumulator and Memory	0 0	0 0	1 0	1 1	1 D_3	1 D_2	1 D_1	1 D_0	3F 10-1F	2	2	
JCP addr	$PC_{5-0}\leftarrow D_{5-0}$	Jump within current page	1	0	D_5	D_4	D_3	D_2	D_1	D_0	80-BF	1	1	
JMP addr	$PC_{11-0}\leftarrow D_{11-0}$	Jump to specified address	0 D_7	0 D_6	1 D_5	0 D_4	D_{11} D_3	D_{10} D_2	D_9 D_1	D_8 D_0	20-2F 00-FF	2	2	
JUMPL addr	$BANK\leftarrow D_{12}$ $PC_{11-0}\leftarrow D_{11-0}$	Jump Long to specified address	0 0 D_7	0 0 D_6	1 D_{12} D_5	1 0 D_4	1 D_{11} D_3	1 D_{10} D_2	1 D_9 D_1	1 D_8 D_0	3F 00-0F 20-2F 00-FF	3	3	
RT	$PC_{11-8}\leftarrow (SP)$ $BANK\leftarrow (SP+1)$ $PC_{3-0}\leftarrow (SP+2)$ $PC_{7-4}\leftarrow (SP+3)$ $SP\leftarrow SP+4$	Return from Subroutine	0	1	0	1	0	0	1	1	53	1	1	
RTPSW	$PC_{11-8}\leftarrow (SP)$ $PSW\leftarrow (SP+1)$ $PC_{3-0}\leftarrow (SP+2)$ $PC_{7-4}\leftarrow (SP+3)$ $SP\leftarrow SP+4$	Return from Subroutine and restore PSW	0	1	0	0	0	0	1	1	43	1	2	
RTS	$PC_{11-8}\leftarrow (SP)$ $BANK\leftarrow (SP+1)$ $PC_{3-0}\leftarrow (SP+2)$ $PC_{7-4}\leftarrow (SP+3)$ $SP\leftarrow (SP+4)$ Skip unconditionally	Return from Subroutine; then skip next instruction	0	1	0	1	1	0	1	1	5B	1	1+S	Unconditional
			Stack											
POPDE	$E\leftarrow (SP)$ $D\leftarrow (SP+1)$ $SP\leftarrow SP+2$	Pop DE register pair off Stack	0 1	0 0	1 0	1 0	1 1	1 1	1 1	0 1	3E 8F	2	2	
POPHL	$L\leftarrow (SP)$ $H\leftarrow (SP+1)$ $SP\leftarrow SP+2$	Pop HL register pair off Stack	0 1	0 0	1 0	1 1	1 1	1 1	1 1	0 1	3E 9F	2	2	
PSHDE	$(SP-1)\leftarrow D$ $(SP-2)\leftarrow E$ $SP\leftarrow SP-2$	Push DE register pair on Stack	0 1	0 0	1 0	1 0	1 1	1 1	1 1	0 0	3E 8E	2	2	
PSHHL	$(SP-1)\leftarrow H$ $(SP-2)\leftarrow L$ $SP\leftarrow SP-2$	Push HL register pair on Stack	0 1	0 0	1 0	1 1	1 1	1 1	1 1	0 0	3E 9E	2	2	
TAMSP	$SP_{7-4}\leftarrow A$ $SP_{3-1}\leftarrow (HL)_{3-1}$ $SP_0\leftarrow 0$	Transfer Accumulator and Memory to Stack Pointer	0 0	0 0	1 1	1 1	1 0	1 0	1 0	1 1	3F 31	2	2	
TSPAM	$A\leftarrow SP_{7-4}$ $(HL)_{3-1}\leftarrow SP_{3-1}$ $(HL)_0\leftarrow 0$	Transfer Stack Pointer to Accumulator and Memory	0 0	0 0	1 1	1 1	1 0	1 1	1 0	1 1	3F 35	2	2	
			Conditional Skip											
SKABT bit	Skip if $A_{bit}=1$ bit = B_{1-0}(0-3)	Skip if Accumulator bit true	0	1	1	1	0	1	B_1	B_0	74-77	1	1+S	$A_{bit}=1$
SKAEI data	Skip if $A=D_{3-0}$	Skip if Accumulator equals immediate data	0 0	0 1	1 1	1 0	1 D_3	1 D_2	1 D_1	1 D_0	3F 60-6F	2	2+S	$A=D_{3-0}$
SKAEM	Skip if A = (HL)	Skip if Accumulator equals Memory	0	1	0	1	1	1	1	1	5F	1	1+S	A = (HL)
SKC	Skip if C = 1	Skip if Carry	0	1	0	1	1	0	1	0	5A	1	1+S	C = 1
SKDEI data	Skip if $D=D_{3-0}$	Skip if D equals immediate data	0 0	0 1	1 1	1 0	1 D_3	1 D_2	1 D_1	0 D_0	3E 60-6F	2	2+S	$D=D_{3-0}$
SKEEI data	Skip if $E=D_{3-0}$	Skip if E equals immediate data	0 0	0 1	1 0	1 0	1 D_3	1 D_2	1 D_1	0 D_0	3E 40-4F	2	2+S	$E=D_{3-0}$
SKHEI data	Skip if $H=D_{3-0}$	Skip if H equals immediate data	0 0	0 1	1 1	1 1	1 D_3	1 D_2	1 D_1	0 D_0	3E 70-7F	2	2+S	$H=D_{3-0}$

© IC MASTER 1984

Instruction Set "A" (Cont.)

For the μPD7500, μPD7502, μPD7503, μPD7507, μPD7507S, μPD7508, μPD7508A, and μPD7519 devices only

Mnemonic	Function	Description	Instruction Code D_7	D_6	D_5	D_4	D_3	D_2	D_1	D_0	HEX	Bytes	Cycles	Skip Condition
			Conditional Skip (Cont.)											
SKLEI data	Skip if L = D_{3-0}	Skip if L equals immediate data	0 0	0 1	1 0	1 1	1 D_3	1 D_2	1 D_1	0 D_0	3E 50-5F	2	2+S	L = D_{3-0}
SKMBF bit	Skip if $(HL)_{bit}$ = 0 bit = B_{1-0}(0-3)	Skip if Memory bit false	0	1	1	0	0	0	B_1	B_0	60-63	1	1+S	$(HL)_{bit}$ = 0
SKMBT bit	Skip if $(HL)_{bit}$ = 1 bit = B_{1-0}(0-3)	Skip if Memory bit true	0	1	1	0	0	1	B_1	B_0	64-67	1	1+S	$(HL)_{bit}$ = 1
SKMEI	Skip if (HL) = D_{3-0}	Skip if Memory equals immediate data	0 0	0 1	1 1	1 1	1 D_3	1 D_2	1 D_1	1 D_0	3F 70-7F	2	2+S	(HL) = D_{3-0}
			Timer/Event Counter											
TAMMOD	TMR_{7-4}←A TMR_{3-0}←(HL)	Transfer Accumulator and Memory to Timer Modulo Register	0 0	0 0	1 1	1 1	1 1	1 1	1 1	1 1	3F 3F	2	2	
TCNTAM	A←TCR_{7-4} (HL)←TCR_{3-0}	Transfer Timer Count Register to Accumulator and Memory	0 0	0 0	1 1	1 1	1 1	1 0	1 1	1 1	3F 3B	2	2	
TIMER	TCR_{7-0}←0 IRF_T←0	Start Timer	0 0	0 0	1 1	1 1	1 0	1 0	1 1	1 0	3F 32	2	2	
			Interrupt Control											
DI data	IME F/F←0 if data = 0 IER_{3-0}←IER_{3-0} AND NOT D_{3-0} if data < > 0	Disable Interrupt, Interrupt Master Enable F/F or specified	0 1	0 0	1 0	1 0	1 D_3	1 D_2	1 D_1	1 D_0	3F 80-8F	2	2	
EI data	IME F/F←1 if data = 0 IER_{3-0}←IER_{3-0} OR D_{3-0} if data < > 0	Enable Interrupt, Interrupt Master Enable F/F or specified	0 1	0 0	1 0	1 1	1 D_3	1 D_2	1 D_1	1 D_0	3F 90-9F	2	2	
SKI data	Skip if IRF_n AND D_{3-0} < > 0 IRF_n←IRF_n AND NOT D_{3-0}	Skip if Interrupt Request Flag is true	0 0	0 1	1 0	1 0	1 D_3	1 D_2	1 D_1	1 D_0	3F 40-4F	2	2+S	IRF_n = 1
			Serial Interface											
SIO	SIOCR←0 $IRF_{0/S}$←0	Start Serial I/O Operation	0 0	0 0	1 1	1 1	1 0	1 0	1 1	1 1	3F 33	2	2	
TAMSIO	SIO_{7-4}←A SIO_{3-0}←(HL)	Transfer Accumulator and Memory to SI Shift Register	0 0	0 0	1 1	1 1	1 1	1 1	1 1	1 0	3F 3E	2	2	
TSIOAM	A←SIO_{7-4} (HL)←SIO_{3-0}	Transfer SI Shift Register to Accumulator and Memory	0 0	0 0	1 1	1 1	1 1	1 0	1 1	1 0	3F 3A	2	2	
			Parallel I/O											
ANP data	$P(P_{3-0})$←$P(P_{3-0})$ AND D_{3-0}	AND output port latch with immediate data	0 D_3	1 D_2	0 D_1	0 D_0	1 P_3	1 P_2	0 P_1	0 P_0	4C 00-FF	2	2	
IP port	A←$P(P_{3-0})$	Input from port, immediate address	0 1	0 1	1 0	1 0	1 P_3	1 P_2	1 P_1	1 P_0	3F C0-CF	2	2	
IP1 (except μPD7507S)	A←P(1)	Input from Port 1	0	1	1	1	0	0	0	1	71	1	1	
IP54	A←P(5) (HL)←P(4)	Input Byte from Ports 5 and 4	0 0	0 0	1 1	1 1	1 1	1 0	1 0	1 0	3F 38	2	2	
IPL	A←P(L)	Input from Port specified by L	0	1	1	1	0	0	0	0	70	1	1	
OP port	$P(P_{3-0})$←A	Output to port, immediate address	0 1	0 1	1 1	1 0	1 P_3	1 P_2	1 P_1	1 P_0	3F E0-EF	2	2	
OP3	P(3)←A	Output to Port 3	0	1	1	1	0	0	1	1	73	1	1	
OP54	P(5)←A P(4)←(HL)	Output Byte to Ports 5 and 4	0 0	0 0	1 1	1 1	1 1	1 1	1 0	1 0	3F 3C	2	2	
OPL	P(L)←A	Output to port specified by L	0	1	1	1	0	0	1	0	72	1	1	
ORP data	$P(P_{3-0})$←(P_{3-0}) OR D_{3-0}	OR output port latch with immediate data	0 D_3	1 D_2	0 D_1	0 D_0	1 P_3	1 P_2	0 P_1	1 P_0	4D 00-FF	2	2	
RPBL	μPD82C43 I/O Expander Port (L_{3-2}) bit (L_{1-0})←0	Reset Port Bit specified by L	0	1	0	1	1	1	0	0	5C	1	1	
SPBL	μPD82C43 I/O Expander Port (L_{3-2}) bit (L_{1-0})←1	Set Port Bit specified by L	0	1	0	1	1	1	0	1	5D	1	1	
			CPU Control											
HALT		Enter HALT Mode	0 0	0 0	1 1	1 1	1 0	1 1	1 1	1 0	3F 36	2	2	
NOP		No operation	0	0	0	0	0	0	0	0	00	1	1	
STOP		Enter STOP Mode	0 0	0 0	1 1	1 1	1 0	1 1	1 1	1 1	3F 37	2	2	

© IC MASTER 1984

Instruction Set "B"

For the μPD7500, μPD7501, and μPD7506 devices only

Mnemonic	Function	Description	Instruction Code D_7	D_6	D_5	D_4	D_3	D_2	D_1	D_0	HEX	Bytes	Cycles	Skip Condition
			Load											
LADR addr	$A \leftarrow (D_{6-0})$	Load Accumulator from directly addressed RAM	0 0	0 D_6	1 D_5	1 D_4	1 D_3	0 D_2	0 D_1	0 D_0	38 00-5F	2	2	
LAI data	$A \leftarrow D_{3-0}$	Load Accumulator with immediate data	0	0	0	1	D_3	D_2	D_1	D_0	10-1F	1	1	String
LAM rp	$A \leftarrow (rp)$ rp = HL−, HL+, HL if rp = HL−, skip if borrow if rp = HL+, skip if overflow	Load Accumulator from Memory, possible skip	0	1	0	1	0	0	D_1	D_0	50-52	1	1+S	See explanation of "rp" in symbol definitions
LAMT	ROM addr = PC_{10-6}, 0, C, A_{3-0} $A \leftarrow [ROM\ addr]_{7-4}$ $(HL) \leftarrow [ROM\ addr]_{3-0}$	Load Accumulator and Memory from Table	0	1	0	1	1	1	1	0	5E	1	2	
LAMTL	ROM addr = PC_{10-8}, A_{3-0}, $(HL)_{3-0}$ $A \leftarrow [ROM\ addr]_{7-4}$ $(HL) \leftarrow [ROM\ addr]_{3-0}$	Load Accumulator and Memory from Table Long	0 0	0 0	1 1	1 1	1 0	1 1	1 0	1 0	3F 34	2	2	
LHI data	$H_3 \leftarrow 0$ $H_{2-0} \leftarrow D_{2-0}$	Load H register with immediate data	0	0	1	0	1	D_2	D_1	D_0	28-2F	1	1	
LHLI data	$H_{3-1} \leftarrow 0$ $H_0 \leftarrow D_4$ $L \leftarrow D_{3-0}$	Load HL register pair with immediate data	1	1	0	D_4	D_3	D_2	D_1	D_0	C0-DF	1	1	String
			Store											
ST	$(HL) \leftarrow A$	Store A to Memory	0	1	0	1	0	1	1	1	57	1	1	
STII data	$(HL) \leftarrow D_{3-0}$ $L \leftarrow L + 1$	Store immediate data and increment L	0	1	0	0	D_3	D_2	D_1	D_0	40-4F	1	1	
			Exchange											
XADR addr	$A \leftrightarrow (D_{6-0})$	Exchange A with directly addressed RAM	0 0	0 D_6	1 D_5	1 D_4	1 D_3	0 D_2	0 D_1	1 D_0	39 00-5F	2	2	
XAH	$A \leftrightarrow H$	Exchange A with H	0	1	1	1	1	0	1	0	7A	1	1	
XAL	$A \leftrightarrow L$	Exchange A with L	0	1	1	1	1	0	1	1	7B	1	1	
XAM rp	$A \leftrightarrow (rp)$ rp = HL−, HL+, HL if rp = HL−, skip if borrow if rp = HL+, skip if overflow	Exchange A with Memory, Possible Skip	0	1	0	1	0	1	D_1	D_0	54-56	1	1+S	See explanation or "rp" in symbol definitions
XHDR addr	$H \leftrightarrow (D_{6-0})$	Exchange H with directly addressed RAM	0 0	0 D_6	1 D_5	1 D_4	1 D_3	0 D_2	1 D_1	0 D_0	3A 00-5F	2	2	
XLDR addr	$L \leftrightarrow (D_{6-0})$	Exchange L with directly addressed RAM	0 0	0 D_6	1 D_5	1 D_4	1 D_3	0 D_2	1 D_1	1 D_0	3B 00-5F	2	2	
			Arithmetic											
ACSC	$A, C \leftarrow A \pm (HL) + C$ skip if carry	Add with carry; skip if carry	0	1	1	1	1	1	0	0	7C	1	1+S	Carry = 1
AISC data	$A \leftarrow A + D_{3-0}$ skip if overflow	Add immediate; skip if overflow	0	0	0	0	D_3	D_2	D_1	D_0	00-0F	1	1+S	Overflow
ASC	$A \leftarrow A + (HL)$ skip if overflow	Add memory; skip if overflow	0	1	1	1	1	1	0	1	7C	1	1+S	Carry = 1
			Logical											
ANL	$A \leftarrow A$ AND (HL)	AND Accumulator and Memory	0 1	0 0	1 1	1 1	1 0	1 0	1 1	1 0	3F B2	2	2	
EXL	$A \leftarrow A$ XOR (HL)	Exclusive-Or Accumulator and Memory	0	1	1	1	1	1	1	0	7E	1	1	
ORL	$A \leftarrow A$ OR (HL)	OR Accumulator and Memory	0 1	0 0	1 1	1 1	1 0	1 1	1 1	1 0	3F B6	2	2	
			Accumulator											
CMA	$A \leftarrow$ NOT A	Complement Accumulator	0	1	1	1	1	1	1	1	7F	1	1	
RAL	$C \leftarrow A_3$ $A_3 \leftarrow A_2$ $A_2 \leftarrow A_1$ $A_1 \leftarrow A_0$ $A_0 \leftarrow C$ (old)	Rotate Accumulator left through Carry	0 1	0 0	1 1	1 1	1 0	1 1	1 1	1 1	3F B7	2	2	
RAR	$C \leftarrow A_0$ $A_0 \leftarrow A_1$ $A_1 \leftarrow A_2$ $A_2 \leftarrow A_3$ $A_3 \leftarrow C$ (old)	Rotate Accumulator right through Carry	0 1	0 0	1 1	1 1	1 0	1 0	1 1	1 1	3F B3	2	2	
			Program Status Word											
RC	$C \leftarrow 0$	Reset Carry	0	1	1	1	1	0	0	0	78	1	1	
SC	$C \leftarrow 1$	Set Carry	0	1	1	1	1	0	0	1	79	1	1	

© IC MASTER 1984

Instruction Set "B" (Cont.)

For the μPD7500, μPD7501, and μPD7506 devices only

Mnemonic	Function	Description	Instruction Code D_7	D_6	D_5	D_4	D_3	D_2	D_1	D_0	HEX	Bytes	Cycles	Skip Condition
			Increment and Decrement											
DDRS addr	$(D_{6-0}) \leftarrow (D_{6-0}) - 1$ skip if (D_{6-0}) = FH	Decrement directly addressed RAM; skip if borrow	0 0	0 D_6	1 D_5	1 D_4	1 D_3	1 D_2	0 D_1	0 D_0	3C 00-5F	2	2+S	(D_{6-0}) = FH
DLS	$L \leftarrow L - 1$ skip if L = FH	Decrement L; skip if borrow	0	1	0	1	1	0	0	0	58	1	1+S	L = FH
IDRS addr	$(D_{6-0}) \leftarrow (D_{6-0}) + 1$ skip if (D_{6-0}) = 0H	Increment directly addressed; skip if overflow	0 0	0 D_6	1 D_5	1 D_4	1 D_3	1 D_2	0 D_1	1 D_0	3D 00-5F	2	2+S	(D_{6-0}) = 0H
ILS	$L \leftarrow L + 1$ skip if L = 0H	Increment L; skip if overflow	0	1	0	1	1	0	0	1	59	1	1+S	L = 0H
			Bit Manipulation											
RMB bit	$(HL)_{bit} \leftarrow 0$ bit = B_{1-0} (0-3)	Reset Memory bit	0	1	1	0	1	0	B_1	B_0	68-6B	1	1	
SMB bit	$(HL)_{bit} \leftarrow 1$ bit = B_{1-0} (0-3)	Set Memory bit	0	1	1	0	1	1	B_1	B_0	6C-6F	1	1	
			Branch											
CALL addr	$(SP-1) \leftarrow PC_{7-4}$ $(SP-2) \leftarrow PC_{3-0}$ $(SP-3) \leftarrow PSW$ $(SP-4) \leftarrow PC_{10-8}$ $SP \leftarrow SP - 4$ $BANK \leftarrow 0$ $PC_{10-0} \leftarrow D_{10-0}$	Call subroutine	0 D_7	0 D_6	1 D_5	1 D_4	0 D_3	D_{10} D_2	D_9 D_1	D_8 D_0	30-37 00-FF	2	2	
CAL addr	$(SP-1) \leftarrow PC_{7-4}$ $(SP-2) \leftarrow PC_{3-0}$ $(SP-3) \leftarrow PSW$ $(SP-4) \leftarrow PC_{10-8}$ $BANK \leftarrow 0$ $PC_{10-0} \leftarrow$ $001D_4D_3000D_2D_1D_0$	Call short to CAL address subroutine	1	1	1	D_4	D_3	D_2	D_1	D_0	E0-FF	1	2	
JAM data	$PC_{10-8} \leftarrow D_{2-0}$ $PC_{7-4} \leftarrow A$ $PC_{3-0} \leftarrow (HL)$	Vectored Jump on Accumulator and Memory	0 0	0 0	1 0	1 1	1 0	1 D_2	1 D_1	1 D_0	3F 10-17	2	2	
JCP addr	$PC_{5-0} \leftarrow D_{5-0}$	Jump within current page	1	0	D_5	D_4	D_3	D_2	D_1	D_0	80-BF	1	1	
JMP addr	$PC_{10-0} \leftarrow D_{10-0}$	Jump to specified address	0 D_7	0 D_6	1 D_5	0 D_4	0 D_3	D_{10} D_2	D_9 D_1	D_8 D_0	20-27 00-FF	2	2	
JMPL addr	$BANK \leftarrow D_{12}$ $PC_{11-0} \leftarrow D_{11-0}$	Jump Long to specified address	0 0 D_7	0 0 D_6	1 D_{12} D_5	1 0 D_4	1 D_{11} D_3	1 D_{10} D_2	1 D_9 D_1	1 D_8 D_0	3F 00-0F 20-2F 00-FF	3	3	
RT	$PC_{10-8} \leftarrow (SP)$ $BANK \leftarrow (SP+1)$ $PC_{3-0} \leftarrow (SP+2)$ $PC_{7-4} \leftarrow (SP+3)$ $SP \leftarrow SP + 4$	Return from Subroutine	0	1	0	1	0	0	1	1	53	1	1	
RTS	$PC_{10-8} \leftarrow (SP)$ $BANK \leftarrow (SP+1)$ $PC_{3-0} \leftarrow (SP+2)$ $PC_{7-4} \leftarrow (SP+3)$ $SP \leftarrow SP + 4$ Skip unconditionally	Return from Subroutine; then skip next instruction	0	1	0	1	1	0	1	1	5B	1	1+S	Unconditional
			Stack											
TAMSP	$SP_{7-4} \leftarrow A$ $SP_{3-1} \leftarrow (HL)_{3-1}$ $SP_0 \leftarrow 0$	Transfer Accumulator and Memory to Stack Pointer	0 0	0 0	1 1	1 1	1 0	1 0	1 0	1 1	3F 31	2	2	
TSPAM	$A \leftarrow SP_{7-4}$ $(HL)_{3-1} \leftarrow SP_{3-1}$ $(HL)_0 \leftarrow 0$	Transfer Stack Pointer to Accumulator and Memory	0 0	0 0	1 1	1 1	1 0	1 1	1 0	1 1	3F 35	2	2	
			Conditional Skip											
SKABT bit	Skip if A_{bit} = 1 bit = B_{1-0}(0-3)	Skip if Accumulator bit true	0	1	1	1	0	1	B_1	B_0	74-77	1	1+S	A_{bit} = 1
SKAEI data	Skip if A = D_{3-0}	Skip if Accumulator equals immediate data	0 0	0 1	1 1	1 0	1 D_3	1 D_2	1 D_1	1 D_0	3F 60-6F	2	2+S	A = D_{3-0}
SKAEM	Skip if A = (HL)	Skip if Accumulator equals Memory	0	1	0	1	1	1	1	1	5F	1	1+S	A = (HL)
SKC	Skip if C = 1	Skip if Carry	0	1	0	1	1	0	1	0	5A	1	1+S	C = 1
SKLEI data	Skip if L = D_{3-0}	Skip if L equals immediate data	0 0	0 1	1 0	1 1	1 D_3	1 D_2	1 D_1	0 D_0	3E 50-5F	2	2+S	L = D_{3-0}
SKMBF bit	Skip if $(HL)_{bit}$ = 0 bit = B_{1-0}(0-3)	Skip if Memory bit false	0	1	1	0	0	0	B_1	B_0	60-63	1	1+S	$(HL)_{bit}$ = 0
SKMBT bit	Skip if $(HL)_{bit}$ = 1 bit = B_{1-0}(0-3)	Skip if Memory bit true	0	1	1	0	0	1	B_1	B_0	64-67	1	1+S	$(HL)_{bit}$ = 1
SKMEI	Skip if (HL) = D_{3-0}	Skip if Memory equals immediate data	0 0	0 1	1 1	1 1	1 D_3	1 D_2	1 D_1	1 D_0	3F 70-7F	2	2+S	(HL) = D_{3-0}

© IC MASTER 1984

Instruction Set "B" (Cont.)

For the μPD7500, μPD7501, and μPD7506 devices only

Mnemonic	Function	Description	Instruction Code D_7	D_6	D_5	D_4	D_3	D_2	D_1	D_0	HEX	Bytes	Cycles	Skip Condition
			Timer/Event Counter											
TAMMOD	$TMR_{7-4} \leftarrow A$ $TMR_{3-0} \leftarrow (HL)$	Transfer Accumulator and Memory to Timer Modulo Register	0 0	0 0	1 1	1 1	1 1	1 1	1 1	1 1	3F 3F	2	2	
TCNTAM (except μPD7506)	$A \leftarrow TCR_{7-4}$ $(HL) \leftarrow TCR_{3-0}$	Transfer Timer Count Register to Accumulator and Memory	0 0	0 0	1 1	1 1	1 1	1 0	1 1	1 1	3F 3B	2	2	
TIMER	$TCR_{7-0} \leftarrow 0$ $IRF_T \leftarrow 0$	Clear Timer Counter Register	0 0	0 0	1 1	1 1	1 0	1 0	1 1	1 0	3F 32	2	2	
			Interrupts											
SKI data	Skip if IRF_n AND $D_{3-0} < > 0$ $IRF_n \leftarrow IRF_n$ AND NOT D_{3-0}	Skip if Interrupt Request Flag is true	0 0	0 1	1 0	1 0	1 0	1 D_2	1 D_1	1 D_0	3F 40-47	2	2+S	$IRF_n = 1$
			Serial Interface											
SIO (except μPD7506)	$SIOCR \leftarrow 0$ $IRF_{0/S} \leftarrow 0$	Start Serial I/O Operation	0 0	0 0	1 1	1 1	1 0	1 0	1 1	1 1	3F 33	2	2	
TAMSIO (except μPD7506)	$SIO_{7-4} \leftarrow A$ $SIO_{3-0} \leftarrow (HL)$	Transfer Accumulator and Memory to SIO Shift Register	0 0	0 0	1 1	1 1	1 1	1 1	1 1	1 0	3F 3E	2	2	
TSIOAM (except μPD7506)	$A \leftarrow SIO_{7-4}$ $HL \leftarrow SIO_{3-0}$	Transfer SIO Shift Register to Accumulator and Memory	0 0	0 0	1 1	1 1	1 1	1 0	1 1	1 0	3F 3A	2	2	
			Parallel I/O											
IP port	$A \leftarrow P(P_{3-0})$	Input from port, immediate address	0 1	0 1	1 0	1 0	1 P_3	1 P_2	1 P_1	1 P_0	3F C0-CF	2	2	
IP1	$A \leftarrow (1)$	Input from Port 1	0	1	1	1	0	0	0	1	71	1	1	
IP54	$A \leftarrow P(5)$ $(HL) \leftarrow P(4)$	Input Byte from Ports 5 and 4	0 0	0 0	1 1	1 1	1 1	1 0	1 0	1 0	3F 38	2	2	
IPL	$A \leftarrow P(L)$	Input from Port specified by L	0	1	1	1	0	0	0	0	70	1	1	
OP port	$P(P_{3-0}) \leftarrow A$	Output to port, immediate address	0 1	0 1	1 1	1 0	1 P_3	1 P_2	1 P_1	1 P_0	3F E0-EF	2	2	
OP3 (except μPD7506)	$P(3) \leftarrow A$	Output to Port 3	0	1	1	1	0	0	1	1	73	1	1	
OP54	$P(5) \leftarrow A$ $P(4) \leftarrow (HL)$	Output Byte to Ports 5 and 4	0 0	0 0	1 1	1 1	1 1	1 1	1 0	1 0	3F 3C	2	2	
OPL	$P(L) \leftarrow A$	Output to port specified by L	0	1	1	1	0	0	1	0	72	1	1	
RPBL	μPD82C43 I/O Expander Port (L_{3-2}) bit $(L_{1-0}) \leftarrow 0$	Reset Port Bit Specified by L	0	1	0	1	1	1	0	0	5C	1	1	
SPBL	μPD82C43 I/O Expander Port (L_{3-2}) bit $(L_{1-0}) \leftarrow 1$	Set Port Bit Specified by L	0	1	0	1	1	1	0	1	5D	1	1	
			CPU Control											
HALT		Enter HALT Mode	0 0	0 0	1 1	1 1	1 0	1 1	1 1	1 0	3F 36	2	2	
NOP		No operation	0	0	0	0	0	0	0	0	00	1	1	
STOP		Enter STOP Mode	0 0	0 0	1 1	1 1	1 0	1 1	1 1	1 1	3F 37	2	2	

Development Tools

For software development, editing, debugging, and assembly into object code, the NDS Development System, designed and manufactured by NEC Electronics U.S.A., Inc., is available. Additionally, for systems supporting either the ISIS-II (®Intel Corp.), CP/M (®Digital Research Corp.) operating systems, or Fortran IV ANSI 1966 V3.9, the ASM75 Cross-Assembler is available.

Once software development is complete, the code can be completely evaluated and debugged with hardware by the Evakit-7500 Evaluation Board. Available options include the Evakit-7500-LCD LCD driver board (for the μPD7501, μPD7502, and μPD7503), Evakit-7500-VFD Vacuum Fluorescent Display driver board (for the μPD7508A and μPD7519), and the Evakit-7500-RTT Real Time Tracer. The SE-7502 System Emulation Board will emulate complete functionality of the μPD7501, μPD7502, or μPD7503 for demonstrating your final system design. The SE-7508 System Emulation Board will emulate complete functionality of the μPD7506, μPD7507, μPD7507S, μPD7508, or μPD7508A for demonstrating your final system design. All of these boards take advantage of the capabilities of the μPD7500 Rom-less evaluation chip to perform their tasks.

Complete operation details on any μPD7500 Series CMOS 4-Bit Microcomputer can be found in the μPD7500 Series CMOS 4-Bit Microcomputer Technical Manual.

7500DS-REV1-7-83-TRIUM-CAT

© IC MASTER 1984

4-Bit One Chip-Microcomputer MN1400 Series Selection Guide

Item		MN1400	MN1402	MN1403	MN1404	MN1405	MN1430	MN1432	MN1435
Package		40-Lead DIL Plastic	28-Lead DIL Plastic	18-Lead DIL Plastic	16-Lead DIL Plastic	40-Lead DIL Plastic	40-Lead DIL Plastic	28-Lead DIL Plastic	40-Lead DIL Plastic
Process		NMOS	NMOS	NMOS	NMOS	NMOS	PMOS	PMOS	PMOS
Supply Voltage (standard)		+5V	+5V	+5V	+5V	+5V	−15V	−15V	−15V
Instruction Cycle		10 μs	10 μs	10 μs	10 μs	10 μs	15 μs	15 μs	15 μs
Number of Instruction		75	68	50	48	75	75	68	75
Instruction ROM	On Chip	1024 X 8 Bits	768 X 8 Bits	512 X 8 Bits	512 X 8 Bits	2048 X 8 Bits	1024 X 8 Bits	768 X 8 Bits	2048 X 8 Bits
	External	—	—	—	—	—	—	—	—
Total Data RAM		64 X 4 Bits	32 X 4 Bits	16 X 4 Bits	16 X 4 Bits	128 X 4 Bits	64 X 4 Bits	32 X 4 Bits	128 X 4 Bits
	Directly Addressable	4 Words	4 Words	4 Words	4 Words	4 Words	4 Words	4 Words	4 Words
Subroutine Stack		2 Levels	2 Levels	2 Levels	2 Levels	2 Levels	2 Levels	2 Levels	2 Levels
Counter/Timer		8 Bits	—	—	—	8 Bits	8 Bits	—	8 Bits
Input	Parallel	4 Bits X 2 Ports	4 Bits X 2 Ports	4 Bits X 1 Port	4 Bits X 1 Port	4 Bits X 2 Ports	4 Bits X 2 Ports	4 Bits X 2 Ports	4 Bits X 2 Ports
	Sense	2	2	1	1	2	2	2	2
Output	Parallel	4 Bits X 1 Port (With Latch)	4 Bits X 2 Ports (With Latch)	4 Bits X 1 Port (With Latch)	—	4 Bits X 1 Port (With Latch)	4 Bits X 1 Port (With Latch)	4 Bits X 2 Ports (With Latch)	4 Bits X 1 Port (With Latch)
	PLA	8 Bits X 1 Port	—	—	—	8 Bits X 1 Port	8 Bits X 1 Port	—	8 Bits X 1 Port
	Discrete	12 Bits X 1 Port	5 Bits X 1 Port	4 Bits X 1 Port	6 Bits X 1 Port	12 Bits X 1 Port	12 Bits X 1 Port	5 Bits X 1 Port	12 Bits X 1 Port
Initial Clear		Yes	Yes	Yes	Yes	Yes	Yes	Yes	Yes
On Chip Clock Generator		Yes	Yes	Yes	Yes	Yes	Yes	Yes	Yes
Assembler Support		Yes	Yes	Yes	Yes	Yes	Yes	Yes	Yes
Hardware Simulator		Yes	Yes	Yes	Yes	Yes	Yes	Yes	Yes
System Evaluator		MN1499	MN1499	MN1499	MN1499	MN1499	MN1499	MN1499	MN1499A

4-Bit One Chip-Microcomputer MN1400 Series Selection Guide

Item		MN1450	MN1453	MN1454	MN1455	MN1498	MN1499	MN1499A
Package		40-Lead DIL Plastic	18-Lead DIL Plastic	16-Lead DIL Plastic	40-Lead DIL Plastic	40-Lead DIL Plastic	64-Lead DIL Plastic	64-Lead DIL Plastic
Process		CMOS	CMOS	CMOS	CMOS	NMOS	NMOS	NMOS
Supply Voltage (standard)		+5V	+5V	+5V	+5V	+5V	+5V	+5V
Instruction Cycle		10 μs	10 μs	10 μs	10 μs	10 μs	10 μs	10 μs
Number of Instruction		75	50	48	75	66	75	75
Instruction ROM	On Chip	1024 X 8 Bits	512 X 8 Bits	512 X 8 Bits	2048 X 8 Bits	—	—	—
	External	—	—	—	—	1024 X 8 Bits	2048 X 8 Bits	2048 X 8 Bits
Total Data RAM		64 X 4 Bits	16 X 4 Bits	16 X 4 Bits	128 X 4 Bits	64 X 4 Bits	64 X 4 Bits	128 X 4 Bits
	Directly Addressable	4 Words	4 Words	4 Words	4 Words	4 Words	4 Words	4 Words
Subroutine Stack		2 Levels	2 Levels	2 Levels	2 Levels	2 Levels	2 Levels	2 Levels
Counter/Timer		8 Bits	—	—	8 Bits	—	8 Bits	8 Bits
Input	Parallel	4 Bits X 2 Ports	4 Bits X 1 Port	4 Bits X 1 Port	4 Bits X 2 Ports	4 Bits X 1 Port	4 Bits X 2 Ports	4 Bits X 2 Ports
	Sense	2	1	1	2	1	2	2
Output	Parallel	4 Bits X 1 Port (With Latch)	4 Bits X 1 Port (With Latch)	—	4 Bits X 1 Port (With Latch)	4 Bits X 1 Port (With Latch)	4 Bits 1 X Port (With Latch) 5 Bits X 1 Port (With Latch)	4 Bits X 1 Port (With Latch) 5 Bits X 1 Port (With Latch)
	PLA	8 Bits X 1 Port	—	—	8 Bits X 1 Port	—	—	—
	Discrete	12 Bits X 1 Port	4 Bits X 1 Port	6 Bits X 1 Port	12 Bits X 1 Port	9 Bits X 1 Port	12 Bits X 1 Port	12 Bits X 1 Port
Initial Clear		Yes	Yes	Yes	Yes	Yes	Yes	Yes
On Chip Clock Generator		Yes	Yes	Yes	Yes	Yes	Yes	Yes
Assembler Support		Yes	Yes	Yes	Yes	Yes	Yes	Yes
Hardware Simulator		Yes	Yes	Yes	Yes	Yes	Yes	Yes
System Evaluator		MN1499	MN1499	MN1499	MN1499A	MN1499	—	—

Panasonic®
PANASONIC INDUSTRIAL COMPANY
Division of Matsushita Electric Corporation of America / Electronic Components Division
One Panasonic Way, Secaucus, N.J. 07094 • Tel: (201) 348-5269 • TWX: 710-992-8920

© IC MASTER 1984

High Speed, High Performance 4-Bit One-Chip Microcomputer MN1500 Series Selection Guide

Item		MN1541	MN1542	MN1544	MN1562	MN1564	MN1599 (Evaluator)	MN1591 (I/O Expander)	Remark
Package		40-Lead DIL Plastic	40-Lead DIL Plastic	40-Lead DIL Plastic	64-Lead DIL Plastic	64-Lead DIL Plastic	64-Lead DIL Plastic	64-Lead DIL Plastic	
Process		NMOS	NMOS	NMOS	NMOS	NMOS	NMOS	NMOS	
Supply Voltage		+5V	+5V	+5V	+5V	+5V	+5V	+5V	
Instruction Cycle		2 μs	2 μs	2 μs	2 μs	2 μs	2 μs	—	
Number of Instruction		124	124	124	124	124	124	—	
Instruction Rom	On Chip	1536 X 8 Bits	2048 X 8 Bits	4096 X 8 Bits	2048 X 8 Bits	4096 X 8 Bits	—	—	
	External	—	—	—	—	—	8192 X 8 Bits	—	
Data RAM		128 X 4 Bits	152 X 4 Bits	256 X 4 Bits	152 X 4 Bits	256 X 4 Bits	256 X 4 Bits	—	With power down pin
Subroutine Stack		16 Levels	16 Levels	16 Levels	16 Levels	16 Levels	16 Levels	—	RAM area
Interrupt		4 Levels (External 2 Levels) (Internal 2 Levels)	4 Levels (External 2 Levels) (Internal 2 Levels)	4 Levels (External 2 Levels) (Internal 2 Levels)	4 Levels (External 2 Levels) (Internal 2 Levels)	4 Levels (External 2 Levels) (Internal 2 Levels)	5 Levels (External 3 Levels) (Internal 2 Levels)	—	
Counter/Timer		8 Bits	8 Bits	8 Bits	8 Bits	8 Bits	8 Bits	—	With 7-bit prescaler presettable
Serial Transfer Buffer		8 Bits	8 Bits	8 Bits	8 Bits	8 Bits	8 Bits	—	Clock either on chip or external
Input/Output	Parallel	4 Bits X 6 Ports	4 Bits X 6 Ports	4 Bits X 6 Ports	4 Bits X 12 Ports	4 Bits X 12 Ports	4 Bits X 6 Ports	4 Bits X 6 Ports	Byte I/O, bit I/O available
	Output Strobe	2	2	2	2	2	2	2	
	Serial	2	2	2	2	2	2	—	
	Counter/Timer	2	2	2	2	2	2	—	
	Interrupt	2	2	2	2	2	3	—	
Initial Clear		Yes	Yes	Yes	Yes	Yes	Yes	—	
Clock Generator		Yes	Yes	Yes	Yes	Yes	Yes	—	Resonator: CR, Quartz Ceramic filter
Software Support		Yes	Yes	Yes	Yes	Yes	Yes	—	
Hardware Support		Yes	Yes	Yes	Yes	Yes	Yes	—	
System Evaluator		MN1599	MN1599	MN1599	MN1599 (+MN1591 X 2)	MN1599 (+MN1591 X 2)	—	—	

CMOS Microprocessors, Peripherals and Memories

RCA offers an all CMOS line of microprocessor, memory and peripheral integrated circuits for use in a broad range of diverse industrial, consumer, and military applications. These devices offer the user all the advantages unique to CMOS technology, including:

- **Low power drain** — makes CMOS integrated circuits a natural choice for battery-operated systems, battery backed-up systems, and systems in which heat dissipation is a prime consideration.
- **High noise immunity and wide operating temperature range (-55°C to +125°C)** — allows CMOS integrated circuits to be used in the most demanding industrial environments.
- **Wide operating voltage range** — reduces the need for expensive regulated power supplies and thereby allows the design engineer greater freedom to concentrate on other aspects of system design.

CDP1800 Series

RCA's large and expanding CDP1800-series LSI product line offers the system designer exceptional flexibility in hardware/software tradeoffs. In addition to microprocessors and microcomputers, this product line includes a hardware multiply/divide unit (MDU), a programmable I/O, video and keyboard interface circuits, latches and decoders, a universal asynchronous receiver-transmitter (UART), buffers, separators, and a broad complement of directly interfaceable random-access memories (RAM's) and read-only memories (ROM's).

CDP6800 Series

RCA also offers the CDP6800 family, a new series of pin-for-pin replacements for the Motorola MC146805 Series of CMOS microprocessors and peripherals primarily intended for single-chip system applications. This family of parts includes the CDP6805E2 8-bit microprocessor; the CDP6805F2 8-bit microcomputer (1K ROM); the CDP6805G2 8-bit microcomputer (2K ROM); the CDP6818 Real-Time Clock plus RAM; the CDP6823 Parallel Interface I/O; and the CDP65516 2Kx8 Mask Programmable ROM. Additional types will be added as they become available.

General-Purpose Memories

In addition to the memories designed to interface directly with CDP1800-series microprocessors, RCA also offers a line of general-purpose memories. These memories include types in the MWS and CDM series.

Leadless Chip Carrier

RCA's broad CMOS LSI product line now includes standard CDP1800 series chips in leadless chip-carrier packages. This basic chip set consists of 20, 28, and 44-lead packages on 50-mil lead centers.

Extra-Value Product

Most RCA CDP1800 series parts are offered with burn-in (EVP — Extra-Value Program) and are designated by an "X", "Y" or "Q" suffix added to the part number, e.g., CDM5332EX.

For a complete summary of available microprocessors, memories and peripherals see RCA publication MPG-180D "CMOS 1800-Series LSI." For complete technical data refer to RCA publication SSD-260A "CMOS-LSI DATABOOK".

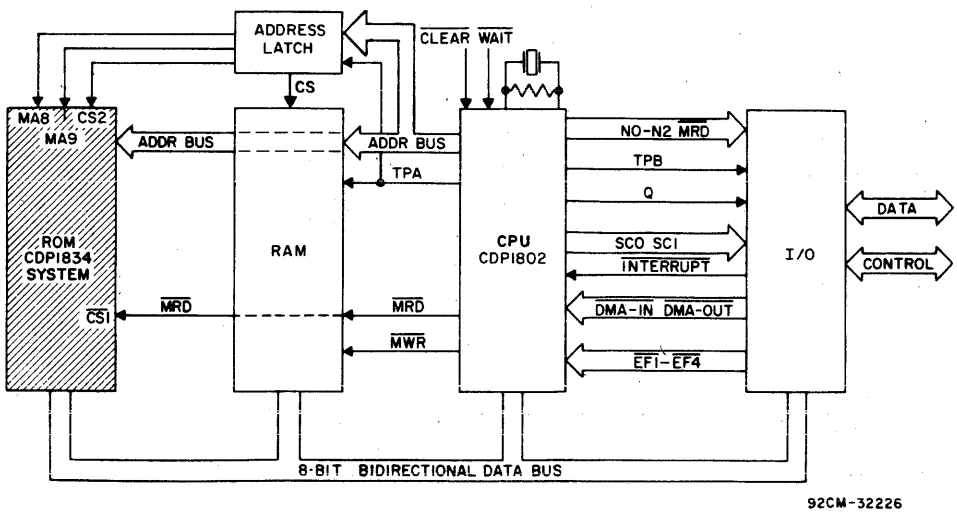

Typical CDP1802 microprocessor system.

© IC MASTER 1984

CMOS Microprocessors, Peripherals and Memories

CMOS 8-Bit Microprocessors

CDP1800 Series

The RCA CDP1800 series offers the most complete line of CMOS microprocessor and associated memory and peripheral devices in the industry. The heart of the series is the CDP1802A CPU. This unit, which features CMOS register-based architecture, offers 16 internal registers to facilitate data manipulation and to reduce the need for additional devices. The need for external devices is further reduced by use of an on-chip clock, and single-phase operation.

The CDP1804A microcomputer incorporates all the features of the CDP1802 with additional hardware and increased performance capability. Refer to the table below for a comparison of the features of the CDP1802A and the CDP1804A as well as those of four other available 8-bit microprocessors that are functional and performance enhancements of the CDP1802A, namely, the CDP1805, CDP1805A, CDP1806 and CDP1806A.

Type No.	Max. Clock Rate — MHz	On-Chip ROM	On-Chip RAM	Timer/ Counter	Number of Instructions
CDP1802A	3.2	—	—	—	91
CDP1802B	5.0	—	—	—	91
CDP1805	4.0	—	64 bytes	8 bit	113
CDP1806	4.0	—	64 bytes	8 bit	113
CDP1804A	5.0	2K bytes	64 bytes	8 bit	123
CDP1805A	5.0	—	64 bytes	8 bit	123
CDP1806A	5.0	—	64 bytes	8 bit	123

Features

- 8-bit parallel organization with bidirectional data bus
- Optional on-chip crystal-controlled oscillator
- Memory addressing up to 65,536 bytes
- Instruction fetch execute time of 2.5 or 3.75 μs (V_{DD} = 10 V); 5 or 7.5 μs (V_{DD} = 5 V)
- 16 x 16 matrix of registers for use as multiple program counter, data pointer, or data register
- Four I/O flag inputs directly tested by branch instructions
- Adaptability to any combination of standard RAM, ROM, or PROM memories
- Minimal power-supply requirements: low current drain, single supply, wide voltage range
- On-chip DMA controls
- Simple RESET, LOAD, PAUSE, and RUN controls
- Programmable serial output (Q)
- Full-temperature-range operation (-55 to +125°C)

Applications

- Industrial controls
- Automotive controls
- Medical electronics
- Remote station equipment (fixed and mobile) with low-power and wide-temperature-range requirements
- Commercial data-processing systems, particularly those requiring battery backup in case of power failure (e.g., point-of-sales terminals, inventory control systems)

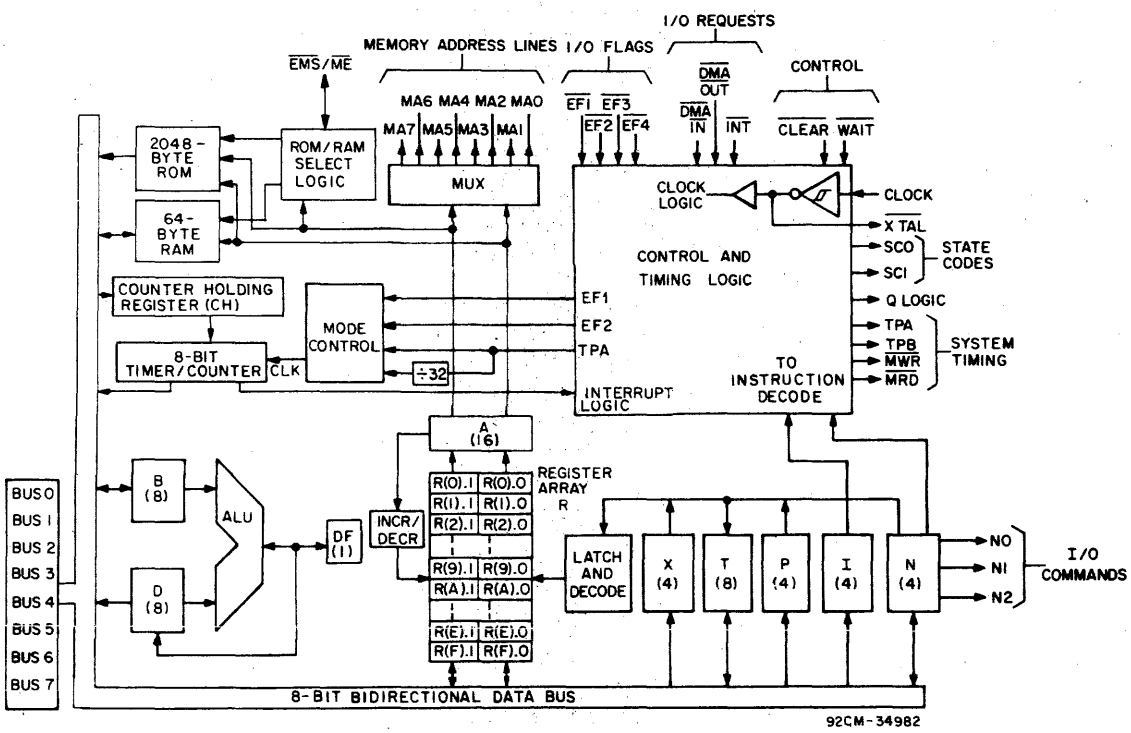

Block diagram CDP1804A Microcomputer.

CMOS 8-Bit Microprocessors

CDP6805 Series

RCA is offering a new line of CMOS 8-bit micro devices in the CDP6805 series. This family includes the CDP6805E2 microprocessor and the CDP6805F2 and CDP6805G2 microcomputers. Devices are supported by a number of input/output (I/O) circuits listed on the I/O circuit page and RAM/ROM pages. The instruction set of CDP6805 is an optimization of the CDP6800 microprocessor. The following chart lists the main features of this family.

	Microprocessor CDP6805E2	Microcomputer CDP6805F2	Microcomputer CDP6805G2
Technology	CMOS	CMOS	CMOS
Registers			
General	2	2	2
Special	3	3	3
Addressing Mode	10	10	10
Basic Instr. Types	61	61	61
Instruction Time			
Average — μs	3.9 to 4.0 μs/average instruction (1MHz)		
Subroutines	29 levels	13 levels	29 levels
Memory ROM	—	1K	2K
RAM Bytes	112	64	112
I/O Programmable			
Bidirect Lines	16	16	32
Package Size	40 pin	28 pin	40 pin
Prescaler	7 Bits programmable		
Counter Bits	8	8	8
Self-Check Mode	Ext. Bus	Yes	Yes
Power Req'ts			
Full Speed	35 mW	10 mW	15 mW
Wait Mode	5 mW	4 mW	4 mW
Stop Mode	25 μW	25 μW	25 μW
Output Drive	LSTTL	LSTTL	12-2 mA 4-LED (10 mA)
Ext. Memory Addressability	8K	—	—

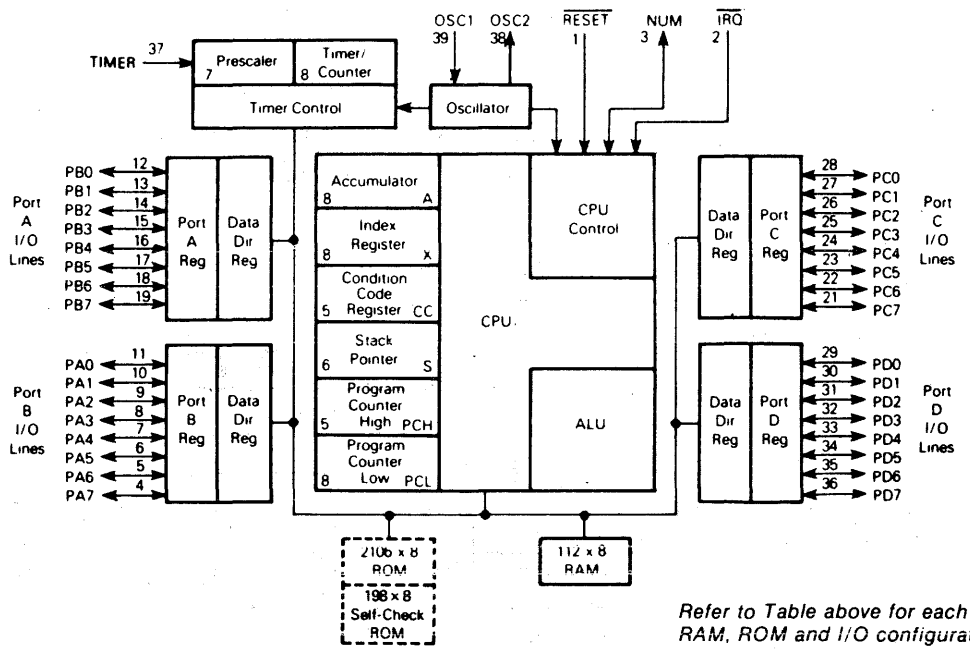

Refer to Table above for each device's RAM, ROM and I/O configuration.

CDP6805 family CMOS microcomputer block diagram.

© IC MASTER 1984

CMOS Memories

CMOS Read Only Memories (ROMs)

RCA offers a line of custom read-only memories (ROMs) which are mask-programmable. These ROMs are offered in both industry standard pin-out and CDP1800-series directly compatible versions.

Features

Common CMOS Features
- Low quiescent and operating power
- High noise immunity
- Full operating-temperature range (-55 to +125°C)
- Single power supply

Industry Standard Features	Organization	CDP1800-Series Compatible Features
• Pin compatible with industry types • Accepts standard memory address decoding • Polarity options on chip select		• Self contained high order address latch • Interface directly to CDP1800 series microprocessors • Chip enable output for RAM disable • Mask programmable address location • Polarity option on chip select • Compatible pinouts on all types
Type No.		**Type No.**
CDP1832	512 x 8	CDP1831
CDP1834	1024 x 8	CDP1833
CDP65516	2048 x 8	CDP1835
CDM5332/5333	4096 x 8	CDP1837
CDM5364	8192 x 8	
CDM53128	16384 x 8	
CDM53256	32768 x 8	

ROM EXPRESS

Type No.	Samples* New Order	Production Deliveries* New Order	Production Deliveries* Reorder
CDP1831,32,33,34	7 weeks	10 weeks	8 weeks
CDP1835,37	9 weeks	12 weeks	10 weeks
CDP65516	9 weeks	12 weeks	10 weeks
CDM5332,33,64,128,256	9 weeks	12 weeks	10 weeks

*After verification of custom pattern

© IC MASTER 1984

CMOS Memories

CMOS Random Access Memories (RAMs)

RCA offers a full line of low power CMOS RAMs with industry standard pinouts for general-purpose use as well as for use with the CDP1800 line of microprocessors. RAM sizes range from 256 bits to 16K bits and are designed for use in memory systems where high speed, low power, minimal data retention voltage and simplicity in use are desireable.

Features

- All the power savings and noise immunity of CMOS
- Low operating current
- Low standby currents
- Fast access times
- Data retention voltages as low as 2 volts
- CDP1800-series or industry standard pinouts

Type	Organization	Pins	Operating Voltage (V)	Operating Current (mA)	Access Time (ns)	Standby Current (μA)
CDP1821	1Kx1	16	5	4	250	500
			10	8	125	1000
CDP1822	256x4	22	5	8	450	500
			10	16	250	1000
CDP1823	128x8	24	5	8	450	500
			10	16	250	1000
CDP1824	32x8	18	5	8	710	100
			10	16	320	500
CDP1826	64x8	22	5	5	1000	50
MWS5101L2	256x4	22	5	8	250	50
MWS5101L3	256x4	22	5	8	350	200
MWS5101A	256x4	22	5	8	350	200
MWS5114-1	1Kx4	18	5	8	300	250
MWS5114-2	1Kx4	18	5	8	250	100
MWS5114-3	1Kx4	18	5	8	200	100
CDM6116AE2	2Kx8	24	5	35	200	30
CDM6116AE3	2Kx8	24	5	35	150	50
CDM6116AE9	2Kx8	24	5	35	250	100
CDM6116AD9	2Kx8	24	5	35	250	100
CDM6117-1	2Kx8	24	5	35	250	100
CDM6117-2	2Kx8	24	5	35	200	30
CDM6118-1	2Kx8	24	5	35	250	100
CDM6118-2	2Kx8	24	5	35	200	30

System Expanders

CDP1858/1859	Memory address latch with 4 bit latch decoders
CDP1866/1867/1868	4 bit latch decoders
CDP1881/1882	Memory address latch with 6 bit latch decoders
CDP1883	Memory address latch with 7 bit latch decoders

© IC MASTER 1984

Microprocessors, Peripherals and Memories

CMOS Peripheral Circuits

RCA offers a wide range of CMOS peripheral devices for the general marketplace. These devices are designed to interface to the 8-bit microprocessor and microcomputer market. Available are a hardware multiply/divide unit (MDU), a programmable I/O, video and keyboard interface circuits, latches and decoders, a universal asynchronous receiver-transmitter (UART), buffers and separators. See the following for a listing of these devices.

Type	Function	Interface to 1800 Series	Interface to 6805 Motel Bus
CDP1851	Programmable I/O Interface	Yes	Yes[1]
CDP1852	Byte Wide Latch	Yes	Yes
CDP1853	N Bit Decoder	Yes	—
CDP1854A	UART (Industry Std. Operation)	Yes	Yes
CDP1855	Multiply/Divide Unit	Yes	Yes[1]
CDP1856/57	4 Bit Bus Buffers/Separators	Yes	—
CDP1858/59	4 Bit Latch & Decoder	Yes	—
CDP1861	Video Display Controller (VDC)	Yes	—
CDP1862	Color Generator Circuit	Yes	—
CDP1863	Programmable Counter	Yes	—
CDP1864	PAL Video Display (VDC)	Yes	—
CDP1866/67/68	4 Bit Latch Decoder	Yes	—
CDP1869/70/76	Video Interface System (VIS)	Yes	—
CDP1871A	Keyboard Encoder (Industry Std. Operation)	Yes	—
CDP1872/74/75	Byte Wide High Speed Latches	Yes	Yes
CDP1873	N Bit Decoder High Speed	Yes	Yes
CDP1877	Programmable Interrupt Controller	Yes	—
CDP1878	Dual Counter-Timer	Yes	Use 6848
CDP1879	Real Time Clock	Yes	—
CDP1881/82	Latch Decoder 6-bit	Yes	Yes
CDP6402	Industry Standard UART	(Industry Std. Function)	
CDP6818	Real Time Clock	—	Yes
CDP6823*	Parallel Interface	—	Yes
CDP6853*	UART — with Baud Rate Gen.	—	Yes
CDP6848	Dual Timer-Counter	Use 1878	Yes
CDP6551*	UART — with Baud Rate Gen.	Yes	Use 6853

*To be announced.
[1]Not a direct interface; require additional parts.

IC MASTER BELONGS ON YOUR BOOKSHELF

If you use IC MASTER frequently, you can obtain your own copy by ordering now. Use the order cards contained in this publication, or order by telephone as described below.

IC MASTER is a two-volume set of technical data carefully organized to direct the engineer to the integrated circuits and related products that are closest to his specific needs. It is the surest way to find the optimum device to answer an engineering design requirement. By ordering now, you won't have to borrow or search for IC MASTER the next time you need it.

Typical Use of IC MASTER

Can an engineer find out who makes a 64K dynamic RAM with an access time of 120 nanoseconds or faster in less than 30 seconds?
He can if he turns to the Memory section of IC MASTER and looks for the 64K organization (words and bits per word) that he needs.
Because each device is listed in order of access time, he can easily determine the devices that satisfy his speed requirements.

In the United States only:

You can order IC MASTER simply by charging it to your VISA or Master Card credit card. To place your order, call now: (516) 222-2500.
Ask for Extension 314.

ORDER YOUR COPY NOW

72710
Self-Adaptive E²ROM Single Chip Microcomputer

ADVANCE DATA SHEET

October 1983

Features

- **1K x 8 5V E²ROM Program Memory**
- **Write to E²ROM Instruction Allows Processor to Load and Alter its Own Program Memory**
- **E²ROM Programmable Externally as Well as Under Processor Control**
- **E²ROM Programming Instruction can Program External E²ROM**
- **128 x 8 Static RAM**
- **1K E²ROM/128 Byte RAM Version of 72720**
- **Program Security Lock to Prevent External Access to User Code**
- **Silicon Signature™ and DiTrace™**
- **TMS 7000 Microlanguage Processor Architecture**

Description

The SEEQ 72710 is a full function single-chip microcomputer, fabricated in N-channel Silicon Gate technology, which contains a 1K x 8 5V non-volatile electrically erasable (E²ROM) program memory. This program memory can be erased and programmed via the processor itself during normal program execution or can be programmed under external control as if it were a standard 5V E²ROM memory component. The E²ROM can easily be expanded off-chip using the processor's Full Expansion Mode. External E²ROM can be programmed with the same instruction used to alter on-chip E²ROM.*

A security lock mechanism is implemented in E²ROM memory which allows the user's program to inhibit external access to its proprietary program code. Once activated this lock can be reset only by an external E²ROM block clear operation which erases the entire program memory contents.

As with other E²ROM devices which SEEQ manufactures, the 72710 has DiTrace™ and Silicon Signature™ features to facilitate production testing and tracking. Each device is encoded with detailed processing, testing, and burn-in results (when required) which are stored in a special E²ROM memory as it passes through the manufacturing cycle. Also stored is an unalterable identification code which contains information such as mask revision and E²ROM programming parameters.

Block Diagram

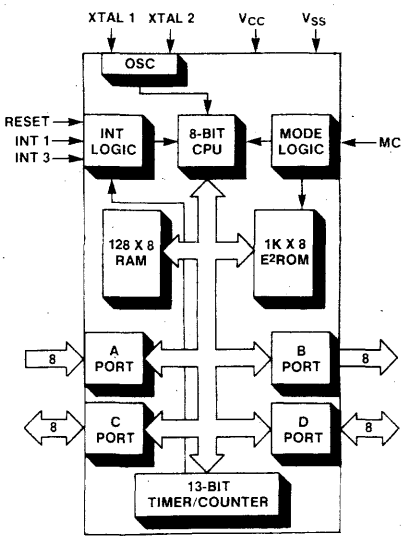

Pin Configuration

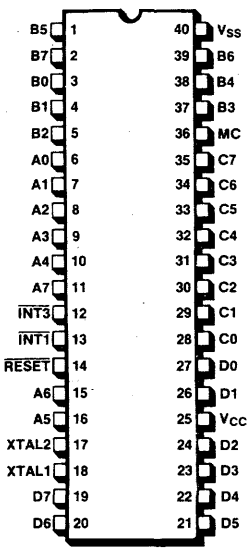

*TMS7000 under license of Texas Instruments Inc.

SEEQ Technology, Incorporated 1849 Fortune Drive, San Jose, California 95131 • (408) 942-1990

© IC MASTER 1984

8002
MCC™ MANCHESTER CODE CONVERTER

SHORT FORM DATA SHEET

JULY 1983

Features

- **Compatible with Ethernet and IEEE 802.3 Specification**
- **SEEQ 8001/8003 EDLC/Ethernet Transceiver Compatible**
- **All EDLC Interface Signals are TTL Compatible**
- **Manchester Data Encoding**
- **Manchester Data Decoding and Receiver Clock Recovery with Phase Locked Loop (PLL)**
- **Receiver Squelch Circuit and Noise Rejection Filter**
- **Collision Squelch Circuit and Noise Rejection Filter**
- **Differential TRANSMIT Cable Driver**
- **Loopback Capability for Diagnostics and Isolation**
- **Fail-Safe Watchdog Timer Circuit to Prevent Continuous Transmission**
- **20 MHz Crystal Oscillator or TTL Compatible Input 20 MHz Oscillator**
- **Transceiver Interface High Voltage (16 V) and Low Voltage Short Circuit Protection**
- **Single +5 V Power Supply**
- **Low Power CMOS Technology**
- **20 pin DIP Package (0.3" Wide)**

Description

The SEEQ 8002 Manchester Code Converter chip provides the Manchester data encoding and decoding functions of the Ethernet Local Area Network physical layer. It interfaces to the SEEQ 8001 or 8003 Ethernet Data Link Controller and any standard Ethernet transceiver, as defined by IEEE 802.3.

The SEEQ 8002 MCC™ is a functionally complete Encoder/Decoder including ECL level balanced driver and receivers, on board oscillator, analog phase locked loop for clock recovery and collision detection circuitry. In addition, the 8002 includes a 25 millisecond watchdog timer, a 4.8 microsecond window generator, an loopback mode for diagnostic operation.

Together with the 8001 or 8003 and a transceiver, the 8002 Manchester Code Converter provides a high performance minimum cost interface for any system to Ethernet.

Functional Block Diagram

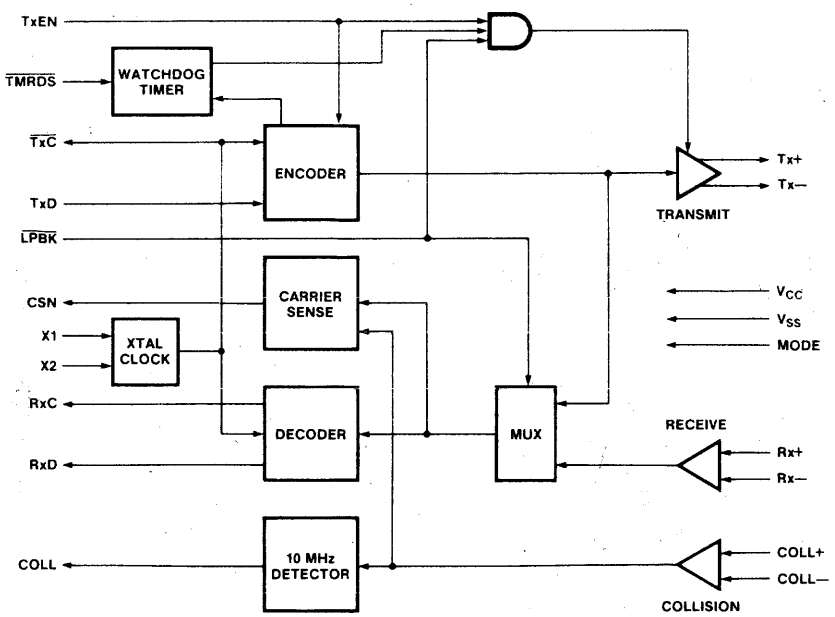

SEEQ Technology, Incorporated 1849 Fortune Drive, San Jose, California 95131 • (408) 942-1990

© IC MASTER 1984

Functional Description

The 8002 Manchester Code Converter chip has two portions, transmitter and receiver. The transmitter uses Manchester encoding to combine the clock and data into a serial stream. It also differentially drives up to 50 meters of twisted pair transmission line. The receiver detects the presence of data and collisions. The 8002 MCC™ recovers the Manchester encoded data stream into clock and data outputs.

Manchester encoding is the process of combining the clock and data stream so that they may be transmitted on a single twisted pair of wires, and the clock and data may be recovered accurately upon reception. Manchester encoding has the unique property of a transition at the center of each bit cell, a positive going transition for a "1", and a negative going transition for a "0".

Manchester Encoder Differential Output Driver

Data encoding and transmission begins with TxEN going active (high logic level). Encoding continues under timing control from the 8002's crystal clock while TxEN remains high for the course of the frame. At the end of the frame, TxEN goes inactive (low logic level) terminating the transmission.

The 8002 provides a balanced differential driver for interfacing the transmitter to the Access Unit Interface cable. Only two bias resistors are required to complete this interface.

Differential Input Circuit (Rx+/–, COLL+/–)

The 8002 provides the differential line receiver, squelch and noise rejection circuitry for the receive (Rx+/–) and Collision (COLL+/–) twisted-pair lines. All that is required to interface each of these inputs to the Access Unit Inferface cable is two resistors for biasing and two for line termination.

Manchester Decoder and Clock Recovery Circuit

The filtered data is processed by the data and clock recovery circuit using a phase-locked loop technique. The PLL is designed to lock onto the preamble of the incoming frame within 12 bit times, worst case. Once in lock, the PLL can recover data from a signal with transition timing jitter up to +/– 18 ns introduced by worst case system noise and distortion factors.

The Carrier Sense (CSN) signal is asserted by the chip whenever it is receiving data, indicating that the decoder circuitry is active.

Pin Configuration

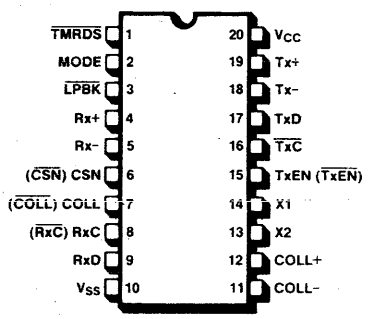

Collision Signaling Detector

A collision on the network is sensed by the Medium Access Unit (transceiver). It generates a 10 MHz +/– 15% signal when a collision is detected. The 10 MHz collision signal is carried to the 8002 on the Collision Signaling Pair (COLL+/–) of the Access Unit Interface cable. The 8002 contains a detector which will recognize the 10 MHz Collision Signal. When it occurs, the 8002 will assert a high logic level on the COLL pin to indicate the collision.

Loopback

In the loopback mode, encoded data is switched to the PLL decoder instead of to the Rx+/– outputs. The Tx+/– inputs are muted. Transmitted data is thus looped back to the communication processor for testing the station-resident transmit and receive circuitry off-line from the Access Unit Interface.

Application References Available from SEEQ

Application Note 3: Manchester Encoding and Decoding for Local Area Networks

Application Brief 5: Interfacing the 8001/8003 EDLC™ to a 16-Bit Bus

Application Brief 6: DMA Interconnection to the 8003 EDLC™

Application Brief 7: Low Cost CSMA/CD Using FIFO/8001 EDLC™ Interconnection

seeq Technology, Incorporated 1849 Fortune Drive, San Jose, California 95131 • (408) 942-1990

© IC MASTER 1984

8001
EDLC™ ETHERNET DATA LINK CONTROLLER

PRODUCT DESCRIPTION

DECEMBER 1982

Features

- **100% Ethernet Compatible**
- **10 MHz Serial/Parallel Conversion**
- **Preamble Generation and Removal**
- **Automatic 32-Bit FCS (CRC) Generation and Checking**
- **Collision Handling, Transmission Deferral and Retransmission with Automatic Jam and Backoff Functions**
- **Error Interrupt and Status Generation**
- **40 Pin Package**
- **Single 5V ±5% Power Supply**
- **Standard CPU and Peripheral Interface Control Signals**
- **Loopback Capability for Diagnostics**
- **Single Phase Clock**
- **Inputs and Outputs TTL Compatible**

Description

The SEEQ Ethernet Data Link Controller (EDLC) is designed to support the Data Link Layer (layer 2) of the Ethernet specification for Local Area Networks (LAN). The protocol used is Carrier Sense Multiple Access with Collision Detection (CSMA/CD). The 8001 EDLC chip is a single 40 pin VLSI device which replaces approximately 60 MSI and SSI devices. It is designed to greatly simplify the development of Ethernet communication in computer based systems. The 8001 provides an economic solution for the construction of an Ethernet node, providing high speed data communication at 10 Megabits/second and sees applications in terminals, workstations, personal computers, small business systems, and large computer systems, in both the office and industrial environment. The 8001 EDLC chip has a universal system interface which will interface with almost any microprocessor, microcomputer, or system bus with equal ease, allowing the system designer to make the price/performance tradeoffs for each application. The transmit and receive sections of the EDLC chip are independent and can operate simultaneously to allow reception of a transmitted frame for use in loopback diagnostics modes.

Functional Block Diagram

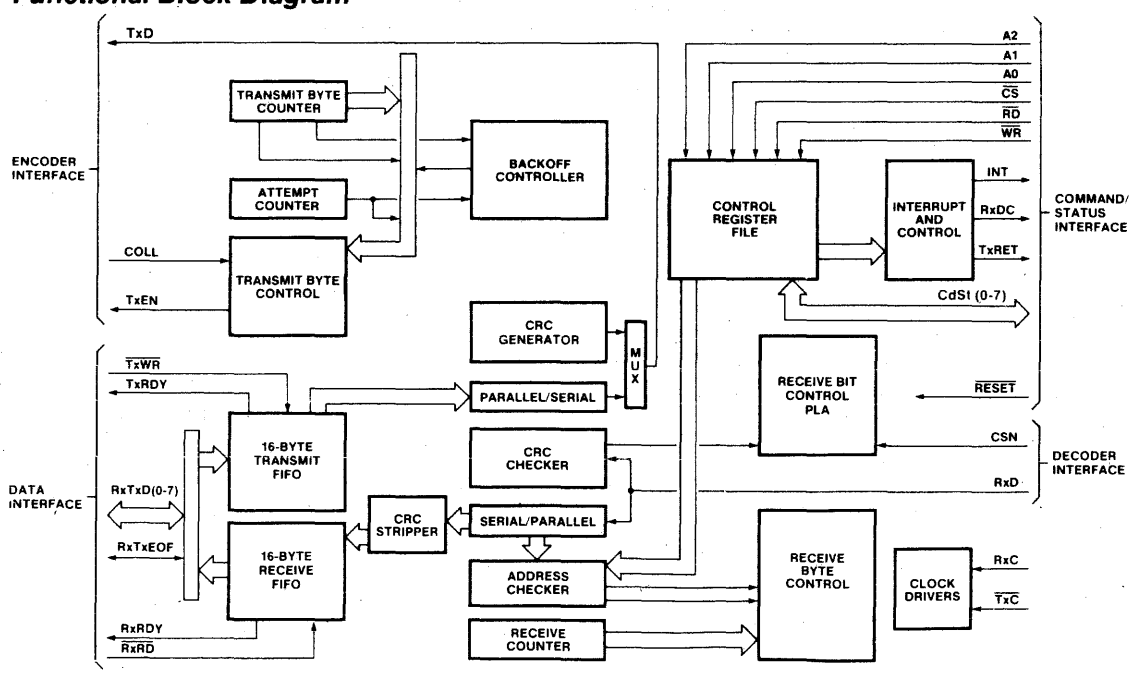

SEEQ Technology, Incorporated 1849 Fortune Drive, San Jose, California 95131 • (408) 942-1990

© IC MASTER 1984

Functional Description

Frame Format

On an Ethernet communication network, information is transmitted and received in packets or frames. An Ethernet frame consists of a preamble, two address fields, a type field, a data field, and a frame check sequence (FCS). Each field has a specific format which is described in detail below. An Ethernet frame has a minimum length of 64 bytes and a maximum length of 1518 bytes exclusive of the preamble. The Ethernet frame format is shown below.

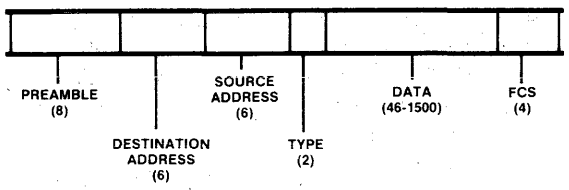

NOTE:
Field length in bytes in parentheses.

Preamble: *The preamble is a 64-bit field consisting of 62 alternating "1"s and "0"s followed by a "11" End-of-Preamble indicator.*

Destination Address: *The Destination Address is a 6-byte field containing either a specific Station Address, a Broadcast Address, or a Multicast Address to which this frame is directed.*

Source Address: *The Source Address is a 6-byte field containing the specific Station Address from which this frame originated.*

Type Field: *The Type Field consists of two bytes. This field is uninterpreted at the Data Link Layer, and is passed through the EDLC chip to be handled at the Client Layer.*

Data Field: *The Data Field consists of 46 to 1500 bytes of information which are fully transparent in the sense that any arbitrary sequence of bytes may occur.*

Frame Check Sequence: *The Frame Check Sequence (FCS) field is a 32-bit cyclic redundancy check (CRC) value computed as a function of the Destination Address Field, Source Address Field, Type Field, and Data Field. The FCS is appended to each transmitted frame, and used at reception to determine if the received frame is valid.*

Pin Description

Encoder/Decoder Interface

$\overline{TxC}$ Transmit Clock (Input): *10 MHz, 50% duty cycle transmit clock used to synchronize the transmit data*

TxD Transmit Data (Output): *Serial data output to the encoder. Active HIGH.*

TxEN Transmit Enable (Output): *This signal is used to activate the encoder. It becomes active when the first bit of the Preamble is transmitted and inactive when the last bit of the frame is transmitted. Active HIGH and cleared by Reset.*

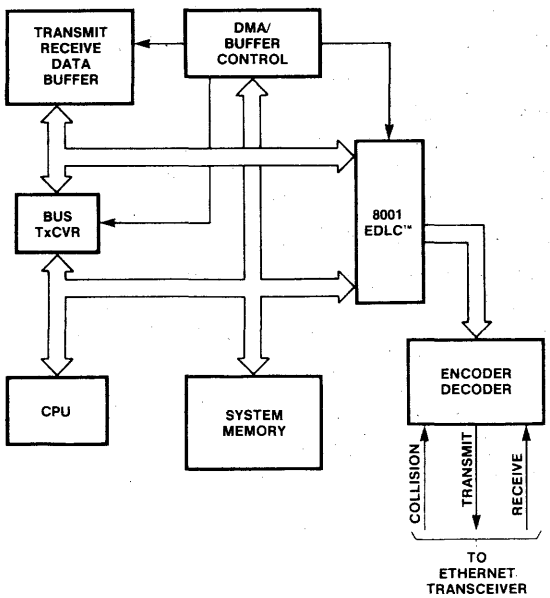

Typical Ethernet Node Configuration

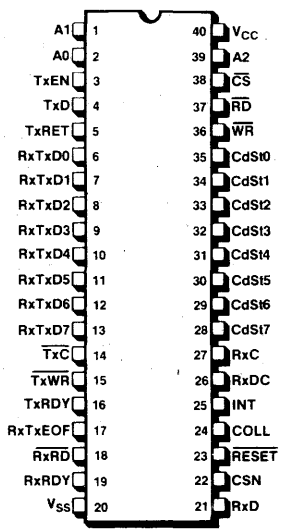

Pin Configuration

© IC MASTER 1984

RxC Receive Clock (Input): *10 MHz, 50% duty cycle nominal. The receive clock is used to synchronize incoming data to the EDLC chip from the decoder. This clock runs continuously, and is asynchronous to $\overline{TxC}$.*

RxD Receive Data (Input): *Serial input data to the EDLC chip from the decoder. Active HIGH.*

CSN Carrier Sense (Input): *Indicates traffic on the coaxial cable to the EDLC chip. Becomes active with the first bit of the Preamble received, and inactive one bit time after the last bit of the frame is received. Active HIGH.*

COLL Collision (Input): *Indicates transmission contention on the Ethernet cable. Once activated must be active until EDLC chip terminates Jam pattern transmission to assure recognition. Active High.*

Data Buffer Interface

RxTxD (0-7) Receive/Transmit Data Bus (I/O): *Carries Receive/Transmit data byte from/to the EDLC chip Receive/Transmit FIFOs. Active HIGH.*

RxTxEOF Receive/Transmit End of Frame (I/O): *Indicates last byte of data on the Receive/Transmit Data Bus. Effectively a ninth bit in the FIFOs with identical timing to RxTxD (0-7). Active HIGH.*

RxRDY Receive Ready (Output): *Indicates at least one byte of received data is available in the Receive FIFO. $\overline{RxRD}$ should not be activated if this pin is LOW. Active HIGH and cleared by Reset.*

$\overline{RxRD}$ Receive Read Strobe (Input): *Enables transfer of received data from the EDLC Receive FIFO to the RxTxD Bus. Data is valid from the EDLC Receive FIFO at the RxTxD pins on the rising edge of this signal. This signal should not be activated unless RxRDY is high. Active LOW.*

RxDC Receive Discard (Output): *Asserted when one of the following errors occur: (1) Receive FIFO overflow, (2) receive error renders current frame unusable, (3) receive frame address non-match or (4) current frame status lost because previous status was not read.*

RxDC acts internally to clear the Receive FIFO.

TxRDY Transmit Ready (Output): *Indicates that the EDLC Transmit FIFO has space available for transmit data bytes. Forced inactive during Reset. Active HIGH. Goes high after Reset.*

$\overline{TxWR}$ Transmit Write (Input): *Synchronizes data transfer from the RxTxD Bus to the Transmit FIFO. Data is written to the FIFO on the rising edge of this signal. This signal should not be active unless TxRDY is high. Active LOW.*

TxRET Transmit Retransmit (Output): *Asserted whenever either transmit underflow or transmit collision conditions occur. It is nominally 800 ns in width. Active HIGH. Asserted by Reset.*

TxRET clears the internal Transmit FIFO.

Command/Status Interface

CdSt (0-7) Command/Status Data Bus (I/O): *These lines carry commands and status as well as station address initialization information between the EDLC chip and CPU. These lines are nominally high impedance until activated by $\overline{CS}$ and $\overline{RD}$ being simultaneously active. Active HIGH.*

A0-A2 Address (0-2) (Input): *Address lines to select the proper EDLC internal registers for reading or writing. Active HIGH.*

$\overline{CS}$ Chip Select (Input): *Chip Select input, must be active in conjunction with $\overline{RD}$ or $\overline{WR}$ to successfully access the EDLC internal registers. Active LOW.*

$\overline{RD}$ Read (Input): *Enables reading of the EDLC internal registers in conjunction with $\overline{CS}$. Data from the internal registers is enabled via the falling edge of $\overline{RD}$ and is valid on the rising edge of the signal. Active LOW.*

$\overline{WR}$ Write (Input): *Enables writing of the EDLC internal registers in conjunction with $\overline{CS}$. Write data on the CdSt (0-7) data lines must be set up relative to the rising edge of the signal. Active LOW.*

INT Interrupt (Output): *Enabled as outlined above by a variety of transmit and receive conditions. Remains active until the status register containing the reason for the interrupt is read. Active HIGH.*

$\overline{RESET}$ (Input): *Initializes control logic, clears command registers, clears the Transmit Status Register, clears bits 0-5 of the Receive Status Register, sets the Old/New Status bit (bit 7 of the Receive Status Register), asserts RxDC and TxRET and clears the Receive and Transmit FIFOs. In addition, TxRDY is forced low during a reset. TxRDY goes high when $\overline{RESET}$ goes high, indicating the EDLC chip is ready to transmit. $\overline{RESET}$ is active LOW.*

© IC MASTER 1984

71840
UV EPROM
SINGLE CHIP MICROCOMPUTER

ADVANCE DATA SHEET October 1983

Features

- ***Fully Z8® Compatible****
- ***4K x 8 EPROM Program Memory***
- ***Intelligent Algorithm EPROM Programming***
- ***256 Byte Register File Including 236 General Purpose Registers***
- ***Average Instructions Execution Time of 2.2 μs Using 8 MHz Crystal***
- ***Silicon Security™ — EPROM Access Inhibit to Protect Proprietary Code***
- ***Single 5 V Power Supply***
- ***40 Pin Dip Package***
- ***Silicon Signature™***

Description

The SEEQ 71840 is a full function second generation single chip microcomputer containing 4K bytes of EPROM program memory, 236 bytes of static RAM, 32 I/O lines, full duplex UART; two programmable 14-bit timer counters, 8 vectored priority interrupts, and an 8 MHz oscillator in a standard 40 pin dual-in-line package. The 71840 is an instruction set, pin out, and electrically compatible with currently available ROM based Z8 single chip microcomputers.

The 71840 can be configured as a stand-alone microcomputer with 4K bytes of internal EPROM or a microprocessor with up to 128 of external memory.

This 4K x 8 on-board EPROM program memory is programmed externally by applying a 12-bit address to the I/O lines of Port 2 and the lower portion of Port 0 while data is applied to Port 1. A 21 volt programming supply is connected to pin 19 and a TTL level program pulse is applied to pin 18. The 71840 is programmed via an intelligent algorithm which applies the appropriate number of program pulses to properly program each byte. Typical byte programming time is 5 ms.

A security lock mechanism is implanted in EPROM memory which allows the user via his EPROM programmer to inhibit external access to proprietary program code. A second user activated lock prevents the processor from fetching code external to the chip. Once activated these locks can be reset only by erasing the entire EPROM array.

As with other EPROM devices which SEEQ manufactures, the 71840 has the Silicon Signature™ feature which consists of an internal ROM containing information such as mask version and EPROM programming parameters.

Block Diagram

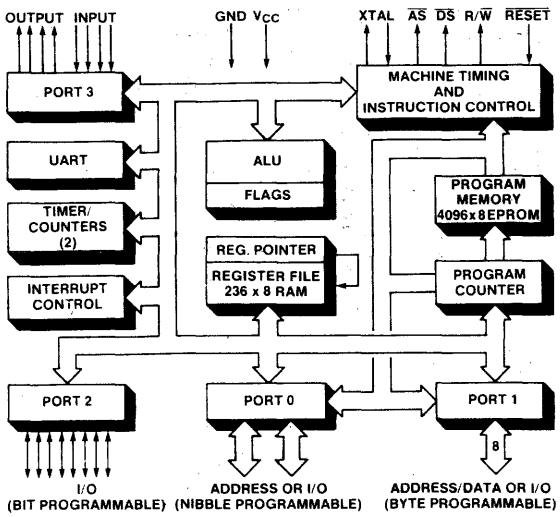

*Z8 is a registered trademark of Zilog, Inc.
Power Down Mode Not Supported.

Pin Configuration

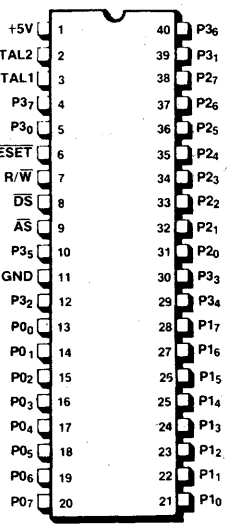

SEEQ Technology, Incorporated 1849 Fortune Drive, San Jose, California 95131 • (408) 942-1990

© IC MASTER 1984

72720

Self-Adaptive E²ROM Single Chip Microcomputer

ADVANCE DATA SHEET

February 1983

Features

- **2K x 8 5V E²ROM Program Memory**
- **Write to E²ROM Instruction Allows Processor to Load and Alter Its Own Program Memory**
- **E²ROM Programmable Externally as Well as Under Processor Control**
- **E²ROM Programming Instruction can Program External E²ROM**
- **256 x 8 Static RAM**
- **13 Millisecond E²ROM Byte Write/Byte Erase**
- **Program Security Lock to Prevent External Access to User Code**
- **Silicon Signature™ and DiTrace™**
- **TMS 7000 Microlanguage Processor Architecture**

Description

The SEEQ 72720 is a full function single-chip microcomputer, fabricated in N-channel Silicon Gate technology, which contains a 2K x 8 5V non-volatile electrically erasable (E²ROM) program memory. This program memory can be erased and programmed via the processor itself during normal program execution or can be programmed under external control as if it were a standard 5V E²ROM memory component. The E²ROM can easily be expanded off-chip using the processor's Full Expansion Mode. External E²ROM can be programmed with the same instruction used to alter on-chip E²ROM.*

A security lock mechanism is implemented in E²ROM memory which allows the user's program to inhibit external access to its proprietary program code. Once activated this lock can be reset only by an external E²ROM block clear operation which erases the entire program memory contents.

As with other E²ROM devices which SEEQ manufactures, the 72720 has DiTrace™ and Silicon Signature™ features to facilitate production testing and tracking. Each device is encoded with detailed processing, testing, and burn-in results (when required) which are stored in a special E²ROM memory as it passes through the manufacturing cycle. Also stored is an unalterable identification code which contains information such as mask revision and E²ROM programming parameters.

Block Diagram

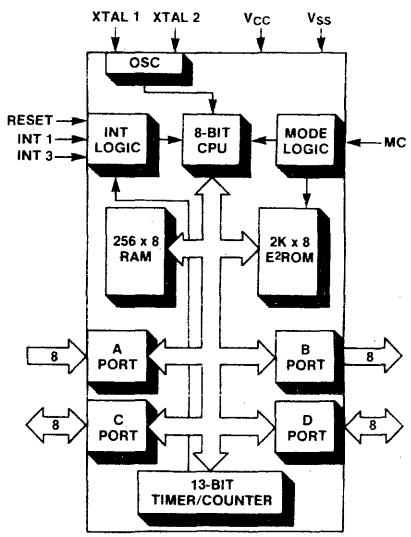

Pin Configuration

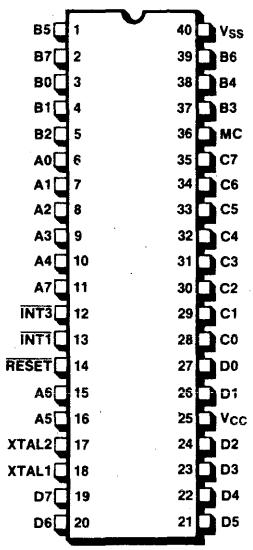

*TMS7000 under license of Texas Instruments Inc.

SEEQ Technology, Incorporated 1849 Fortune Drive, San Jose, California 95131 • (408) 942-1990

© IC MASTER 1984

Programming The E²ROM

The 72720 provides three modes in which the on-board memory can be programmed:

1. *The Slave Mode which can be activated by resetting the part with 5V applied to a dedicated Mode Control (MC) pin and two I/O port lines, allows the 72720 to be programmed like any E²ROM or EPROM memory component. Address, data and read/write strobes are applied externally. This mode allows the 72720 to be programmed by standard PROM programmers or in-circuit by a master processor.*
2. *In all three normal operating modes, Single Chip, Peripheral Expansion, or Full Expansion, the 72720 can be programmed by executing a new instruction called Program (PRG). The PRG instruction uses any 16-bit register pair in the Register File as a pointer to the E²ROM location to be programmed. The 8 bits of data to be programmed is placed in the A-Register prior to executing PRG. This addressing mode allows E²ROM memory to exist anywhere in the Memory address space of the 72720 (either on- or off-chip). The PRG instruction is a (13 ms) write operation which can write any bit already a "1" to a "0". Any word in E²ROM memory not erased i.e., not all "1s", must be initialized to all "1s", via an extra PRG instruction. The external read/write logic of the 72720 has been designed to allow the programming of external E²ROM memory as well as internal E²ROM using the PRG instruction. Therefore, on-chip E²ROM can be expanded off-chip with no impact on system software or timing.*
3. *A third programming option called the Macro mode (which operates in the Full Expansion mode) provides for E²ROM programming via the internal CPU executing externally stored code. Immediately after RESET, the first instruction fetch occurs from external rather than internal program memory. This mode allows the 72720 to bootstrap itself from external memory in situations where no code exists initially in on-board E²ROM memory.*

Mode Control (Normal Operation)

	Pin Voltages at Reset				
	MC Pin	A4 Pin	A7 Pin	I/O Control Register Bit 7	I/O Control Register Bit 6
Single Chip Mode	0V	X	X	0	0
Peripheral Expansion Mode	0V	X	X	0	1
Full Expansion Mode	0V	X	X	1	0
Read E² Memory Externally	+5V	0V	+5V	X	X
Write E² Memory Externally	+5V	+5V	+5V	X	X

X = Don't Care

Single Chip Mode

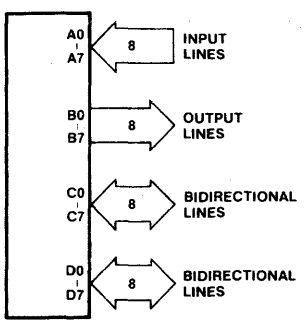

Peripheral Expansion Mode

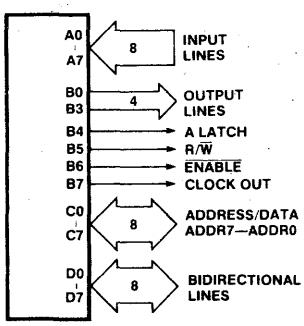

Full Expansion Mode

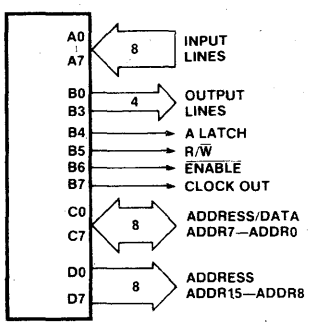

© IC MASTER 1984

Security Lock

Location 01FF in the Peripheral File is a special control register implemented in E²ROM which serves to disable external access to on-board program memory. Security is achieved by writing "1's" to this register after the 72720 has been initialized (at Reset) in either the Single Chip or Peripheral expansion modes. Once the lock is set, the mode of the 72720 cannot be altered via external pins, thereby preventing access to internal memory. The Security Lock can be reset only by an externally generated block clear which erases all internal E²ROM memory.

Memory Address Space

The 72720 has a single 64K byte address space divided into three basic areas: a Register File, a Peripheral File and Memory. The Register File resides in the lower 256 bytes of memory and contains the A-Register (accumulator), the B-Register (a secondary accumulator and index register) and 254 general purpose registers. The stack also residing in the Register File is accessed via a separate 8-bit stack pointer register. All accesses to Register File locations require only one machine cycle (400 ns), whereas all other accesses on- or off-chip, require two. The Register File resides entirely on-chip. The Peripheral File occupies the next 256 bytes above the Register File and contains all chip control/status registers and on-chip I/O ports within the first 11 bytes. The remaining 245 locations can be used to access off-chip I/O ports and peripherals in the Peripheral Expansion mode.

The remainder of the 64K address space is general purpose memory for storage of both programs and data. In the 72720 the upper 2K bytes exist on-chip as E²ROM which serves to store programs, constants, and can also be used to provide non-volatile storage of certain infrequently varying data. The remainder of the address space (≈ 61K) is available in the Full Expansion Mode for any type of memory (including E²ROM) or peripheral devices.

Instruction Set

The 72720 shares the standard instruction set of the TMS7000 Series, which has 61 different instructions, including arithmetic instructions which directly support BCD arithmetic (Decimal Add and Decimal Subtract on packed BCD bytes), single instruction I/O operations on bit fields from 1 to 8 bits that operate without using the accumulator, bit test and jump instructions that function on both I/O and memory, and an 8 x 8 multiply instruction. Also included are a decrement and jump if non-zero instruction for efficient implementation of program loops and several double byte operations including decrement and move.

72720 addressing modes include three byte direct addressing allowing register-to-register operations by-passing the accumulator, 16-bit indirect addressing to the entire 64K address space using any of the 128 register pairs on chip, a special double byte immediate load to the registers indexed with the B-Register, and 16-bit (64K) direct addressing indexed with the B-Register.

72720 Memory Map

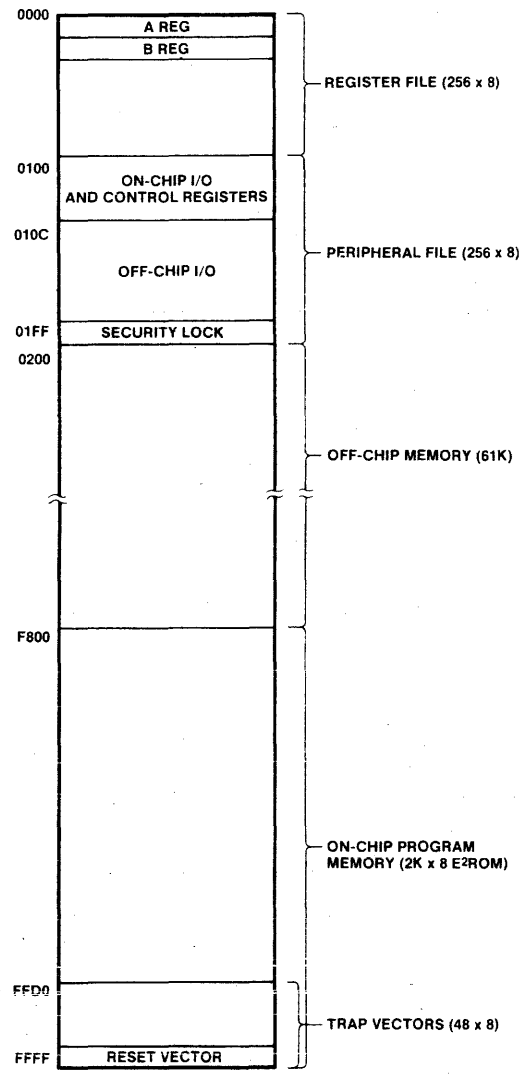

© IC MASTER 1984

Signetics

BIPOLAR LSI Microprocessor Products

8X305	8X360	8X41
8X310	8X371	8X60
8X320	8X372	9401
8X330	8X374	9403
8X350	8X376	SN3001
8X353	8X382	SN3002
8X355	8X02A	

signetics
a subsidiary of U.S. Philips Corporation
Signetics Corporation
811 E. Arques Avenue
P.O. Box 3409
Sunnyvale, California 94088-3409
Telephone 408/739-7700

© IC MASTER 1984

FEATURES	USER BENEFITS
■ MINIMUM PARTS COUNT	• Reduced Cost • Extended Life of Product
■ BIPOLAR DEVICE USING LOW-POWER SCHOTTKY TECHNOLOGY	• Full System Drive Without Buffering • TTL Compatibility • Proven Reliability
■ HIGH PERFORMANCE	• Instruction Cycle Time of 200ns (8X305) or 250ns (8X300) • Bit Addressability — Instruction Data Formats of 1-to-8 Bits Without Added Delay
■ SOURCE/DESTINATION ARCHITECTURE	• Efficient Use of Fixed Instruction Set • Easy to Program • Well-Suited for Control Applications
■ DESIGN FLEXIBILITY	• Single-Chip Processor • Full Complement of Support Devices
■ AFTER-SALES SUPPORT	• Development Systems • Training • Complete Documentation • Applications Support from Qualified Field Engineers

8X305 MICROCONTROLLER & FAMILY OF HIGH-SPEED PERIPHERALS

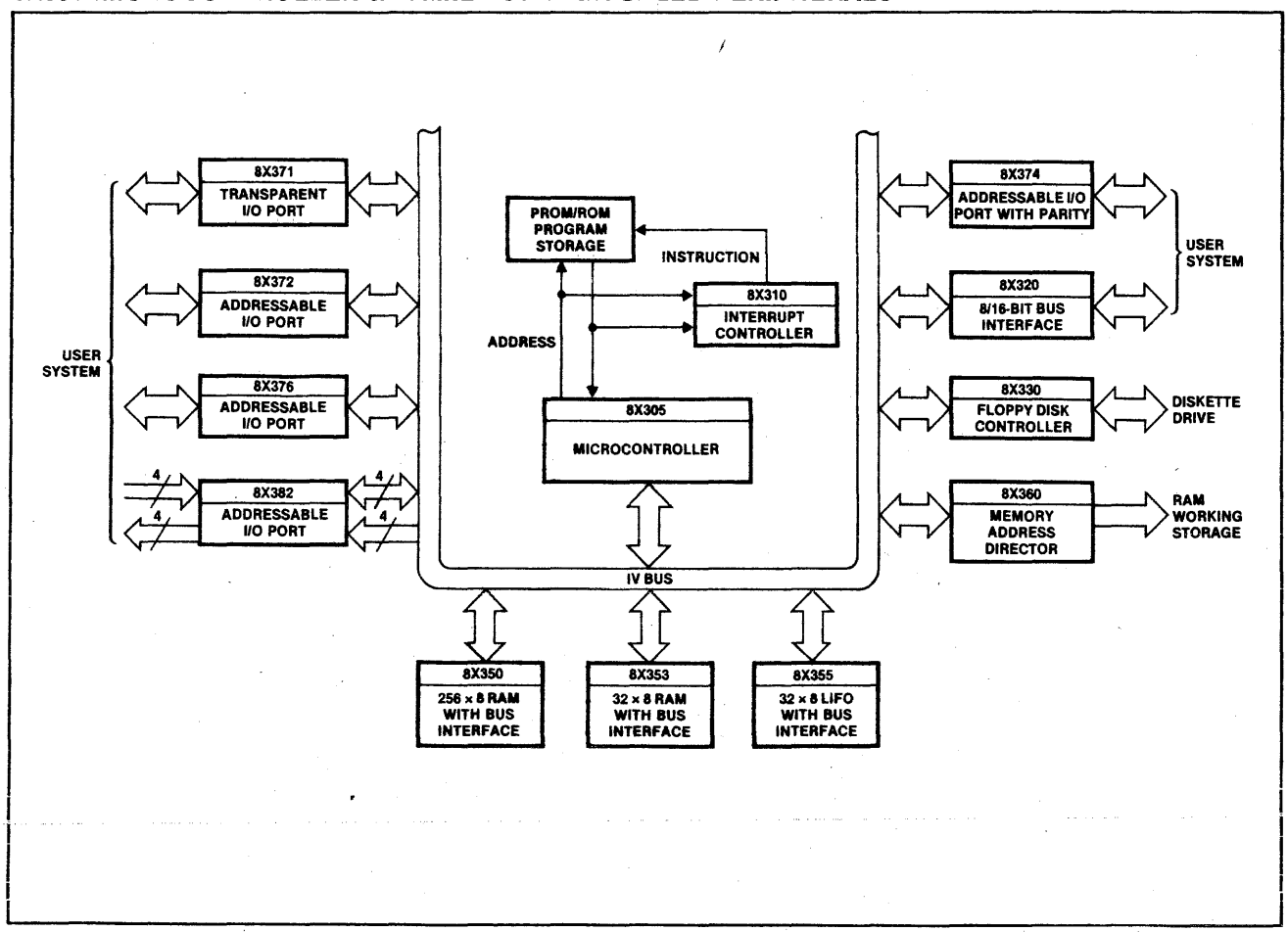

© IC MASTER 1984

PRODUCT LINE OVERVIEW

The Bipolar LSI Microprocessor product line is centered around two high-speed Schottky-fabricated, MicroControllers and an ever-expanding family of I/O devices, support ICs, and development tools to expedite and simplify systems design. No other microprocessor product line offers the advantages of the 8X300 Family in systems that require intelligent control of high-speed data streams.

Both the "new generation (8X305)" and the "old generation (8X300)" MicroControllers can fetch, decode, and execute an instruction in one machine cycle (200ns for the 8X305 and 250ns for the 8X300). In a single instruction, data can be read from the bus, masked, shifted, an ALU operation performed, after which the data can be rotated, merged, and returned to the bus. The architecture and instruction set of each MicroController are designed to provide high data throughput with both bit and byte oriented operations. The 8X305 offers more on-chip registers and significant data handling capability improvements over the original 8X300.

Because of its extremely high performance, the 8X300 Family permits many applications that would normally require special hardware to be implemented in software.

The 8X300 Family is implemented using bipolar, Low-power Schottky technology to provide TTL speeds and drive capability without additional buffering. In addition, the family is compatible with most special-purpose devices often required in control applications. The excellent environmental characteristics of the technology make the 8X300 Family ideal for military applications as well.

To simplify design with the 8X300 Family of parts, a complete complement of development-support tools is available. A self-contained universal development system that supports full speed in-circuit emulation is available; also available are evaluation and demonstration systems. Software modules are provided so that mainframes or minicomputers can be used to generate compatible software. Complete documentation is in place, including both data sheets and comprehensive reference manuals. To supplement these tools, Signetics employs a large, professional staff of applications engineers both in the field and at the factory to support your design efforts.

REFERENCE TABLE FOR 8X300 FAMILY

PART DESIG		PRODUCT DESCRIPTION	FUNCTION
NEW GEN	OLD GEN		
	8X300	MicroController	250ns processor for I/O and data control
8X305		Microcontroller	200ns processor for I/O and data control
8X310		Interrupt Controller	3 prioritized interrupts with 4-level stack
8X320		Bus Interface Array	2-port RAM for 8/16-bit mailbox interfacing
8X330		Floppy Disk Controller	1Mb/sec data rate, programmable, supports ECC
8X350		Bipolar RAM	256 × 8 high-speed memory with bus interface
8X353		32 × 8 RAM	32 × 8 high-speed memory
8X355		32 × 8 LIFO Memory	32 × 7 cascadabke stack
8X360		Memory Address Director	16-bit address controller for working storage
8X371		Transparent I/O Port	High-speed, 8-bit bidirectional, 3-state
8X372		Addressable I/O Port	High-speed, 8-bit bidirectional, synchronous, 3-state
8X374		Addressable I/O Port with Parity	
8X376		Addressable I/O Port	High-speed, 8-bit bidirectional, asynchronous, 3-state
8X382		Addressable I/O Port	High-speed, 4-in/4-out, 3-state
	8T31	Transparent I/O Port	8-bit, bidirectional, 3-state
	8T32	Addressable I/O Port	8-bit bidirectional, synchronous, 3-state
	8T36	Addressable I/O Port	8-bit bidirectional, asynchronous, 3-state

	PIN COUNT	PACKAGE WIDTH	PLASTIC	CERAMIC	CERDIP	COMMERCIAL	MILITARY	VOLTAGE	CURRENT (TYPICAL) (mA)
8X305	50	.9"	✓	✓		✓	✓	V_{CC} 5.0 V_{CR} 3.0*	180 200
8X310	40	.6"	✓	✓		✓	✓	V_{CC} 5.0	180
8X320	40	.6"	✓	✓		✓		V_{CC} 5.0	270
8X330	40	.6"	✓			✓		V_{CC} 5.0 V_{CR} 3.0*	200 250
8X350	22	.4"	✓		✓	✓	✓	V_{CC} 5.0	135
8X353	20	.3"	✓		✓	✓	✓	V_{CC} 5.0	160
8X355	20	.3"	✓		✓	✓	✓	V_{CC} 5.0	160
8X360	40	.6"	✓	✓		✓	✓	V_{CC} 5.0 V_{BB} 1.5	70 130
8X371	24	.4"	✓	✓		✓	✓	V_{CC} 5.0	90
8X372	24	.4"	✓	✓		✓	✓	V_{CC} 5.0	90
8X374	28	.6"	✓		✓	✓	✓	V_{CC} 5.0	100
8X376	24	.4"	✓	✓		✓	✓	V_{CC} 5.0	90
8X382	24	.4"	✓	✓		✓	✓	V_{CC} 5.0	90

*Internally Generated

© IC MASTER 1984

MICROCONTROLLER

8X305

N8X305N, N8X305I, S8X305I

PRODUCT DESCRIPTION

The Signetics 8X305 MicroController is a high-speed bipolar microprocessor implemented with low-power Schottky technology. In a single chip, the 8X305 combines speed, flexibility, and a bit-oriented instruction set. These features and other basic characteristics of the chip combine to provide cost-effective solutions for a broad range of applications. The 8X305 is particularly useful in systems that require high-speed bit manipulations — sophisticated controllers, data communications, very fast interface control, and other applications of a similar nature.

The 8X305 can fetch, decode, and execute a 16-bit instruction word in a minimum of 200 nanoseconds. Within one instruction cycle, the 8-bit data-processing path can be programmed to rotate, mask, shift, and/or merge single or multiple bit subfields and, in addition, perform an ALU operation; in the same instruction, an external data field can be input, processed, and output to a specified destination — likewise, single or multiple bit data fields can be internally moved from a given source to a given destination. To summarize, fixed or variable-length data fields can be fetched, processed, operated on by the ALU, and moved to a different location — all in a timeframe of 200 nanoseconds. To interface with I/O and program memory, the 8X305 uses a 13-bit instruction address bus, a 16-bit instruction bus, an 8-bit bidirectional multiplexed I/O data/address bus and a 5-bit I/O control bus.

A wide selection of I/O devices, interface chips, and special-purpose parts are available for systems use. In most applications, the more powerful 8X305 is functionally interchangeable with its predecessor — the 8X300.

FEATURES

- **Fetch, Decode, and Execute a 16-bit instruction in one machine cycle —**
  8X305: Commercial = 200ns
  Military = 250ns
- **Bit-oriented instruction set (addressable single-or-multiple bit subfields)**
- **Separate buses for Instruction, Instruction Address and I/O (Three-State I/O for 8X305)**
- **Thirteen 8-bit general-purpose working registers for 8X305**
- **Source/destination architecture**
- **Bipolar low-power Schottky technology/TTL inputs and outputs**
- **On-chip oscillator and timing generation**
- **Single +5V supply**
- **0.9-in. 50-pin DIP**

PIN CONFIGURATION

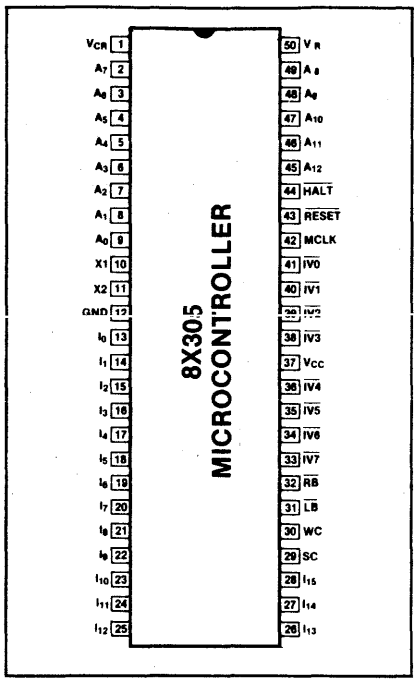

BLOCK DIAGRAM

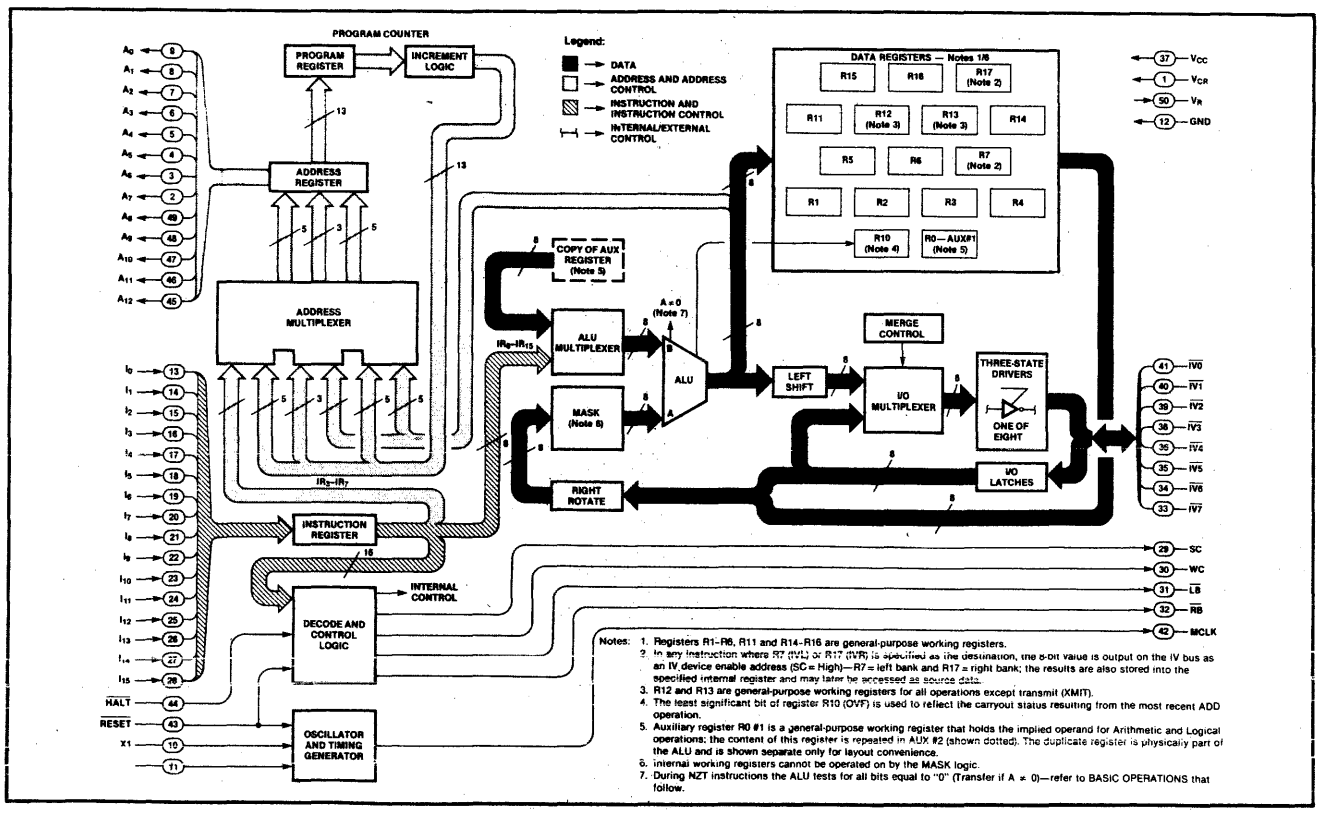

Notes:
1. Registers R1–R6, R11 and R14–R16 are general-purpose working registers.
2. In any instruction where R7 (IVL) or R17 (IVR) is specified as the destination, the 8-bit value is output on the IV bus as an IV device enable address (SC = High)—R7 = left bank and R17 = right bank; the results are also stored into the specified internal register and may later be accessed as source data.
3. R12 and R13 are general-purpose working registers for all operations except transmit (XMIT).
4. The least significant bit of register R10 (OVF) is used to reflect the carryout status resulting from the most recent ADD operation.
5. Auxiliary register R0 #1 is a general-purpose working register that holds the implied operand for Arithmetic and Logical operations; the content of this register is repeated in AUX #2 (shown dotted). The duplicate register is physically part of the ALU and is shown separate only for layout convenience.
6. Internal working registers cannot be operated on by the MASK logic.
7. During NZT instructions the ALU tests for all bits equal to "0" (Transfer if A ≠ 0)—refer to BASIC OPERATIONS that follow.

© IC MASTER 1984

DC CHARACTERISTICS (Commercial Part) $4.75V \leq V_{CC} \leq 5.25V$, $0°C \leq T_A \leq 70°C$

ABSOLUTE MAXIMUM RATINGS

Storage Temperature (T_{STG}) ratings are from −65 to +150°C

PIN	DESCRIPTION	RATING	UNIT	PIN	DESCRIPTION	RATING	UNIT
V_{CC}	Supply voltage	+7.0	V	All other pins	Logic input voltage	5.5	V
X1, X2	Crystal input voltage	2.0	V				

PARAMETER		TEST CONDITIONS	LIMITS Min	LIMITS Typ	LIMITS Max	UNIT	COMMENTS
V_{CC}	Supply voltage		4.75	5.0	5.25	V	
V_{IH}	High level input voltage		0.6 2.0		2.0 5.5	V	X1 and X2 All other pins
V_{IL}	Low level input voltage				0.4 0.8	V	X1 and X2 All other pins
V_{OH}	High level output voltage	V_{CC} = min; I_{OH} = −3mA	2.4			V	
V_{OL}	Low level output voltage	V_{CC} = min; I_{OL} = 6mA V_{CC} = min; I_{OL} = 16mA			0.55 0.55	V	A_0 through A_{12} All other outputs
V_{CR}	Regulator voltage	V_{CC} = 5V		3.1 2.9		V	T_A = 0°C T_A = 70°C
V_{IC}	Input clamp voltage	V_{CC} = min; I_{IN} = −10mA			−1.5	V	Crystal inputs X1 and X2 do not have internal clamp diodes
I_{IH}	High level input current	V_{CC} = max V_{IH} = 0.6V V_{IH} = 4.5V			4.0 50	mA μA	X1 and X2 All other pins
I_{IL}	Low-level input current	V_{CC} = max; V_{IL} = 0.4V			−3 −0.2 −1.6 −0.4	mA	X1 and X2 $\overline{IV0}$–$\overline{IV7}$ I0–I15 $\overline{HALT}$ and $\overline{RESET}$
I_{OS}	Short circuit output current	V_{CC} = max; (Note: At any time, no more than one output should be connected to ground.)	−30		−140	mA	All output pins
I_{CC}	Supply current	V_{CC} = max			180 195	mA	T_A = 70°C T_A = 0°C
I_{REG}	Regulator control	V_{CC} = 5.0V	−10		−25	mA	Max available base drive for series-pass transistor
I_{CR}	Regulator current	V_{CC} = max			200 230	mA	T_A = 70°C T_A = 0°C

Notes:
1. Operating temperature ranges are guaranteed after thermal equilibrium has been reached.
2. All voltages measured with respect to ground terminal.

AC CHARACTERISTICS (Commercial Part) CONDITIONS: $4.75V \leq V_{CC} \leq 5.25V$; $0°C \leq T_A \leq 70°C$

LOADING: (See test circuits)

PARAMETER (Note 1)		LIMITS (INSTRUCTION CYCLE TIME = 200ns) Min	Typ	Max	LIMITS (INSTRUCTION CYCLE TIME > 200ns) Min	Typ	Max	UNITS	COMMENTS
T_{PC}	Processor cycle time	200			200			ns	
T_{CP}	X1 clock period	100			100			ns	
T_{CH}	X1 clock high time	50			50			ns	
T_{CL}	X1 clock low time	50			50			ns	
T_{MCL}	MCLK low delay	15		40	15		40	ns	
T_W	MCLK pulse width	40		60	T_{4Q} − 10		T_{4Q} + 10	ns	Note 2
T_{MODO}	Output driver turn on time MCLK falling edge	125		145	T_{1Q} + T_{2Q} + 25		T_{1Q} + T_{2Q} + 45	ns	Note 9

© IC MASTER 1984

AC CHARACTERISTICS (Commercial Part) (Continued)

CONDITIONS: $4.75V \le V_{CC} \le 5.25V$; $0°C \le T_A \le 70°C$
LOADING: (See test circuits)

PARAMETER (Note 1)		LIMITS (INSTRUCTION CYCLE TIME = 200ns)			LIMITS (INSTRUCTION) CYCLE TIME > 200ns)			UNITS	COMMENTS
		Min	Typ	Max	Min	Typ	Max		
T_{DI}	Output driver turn-on time (SC/WC rising edge)	20			20			ns	Note 10
T_{DD}	Input data to output data	85		105	85		105	ns	
T_{MHS}	MCLK falling edge to $\overline{HALT}$ falling edge			30			$T_{1Q} - 20$	ns	Note 2
T_{MHH}	$\overline{HALT}$ hold time (MCLK falling edge)	65			$T_{1Q} + 15$			ns	Note 2
T_{ACC}	Program storage access time			60				ns	
T_{IO}	I/O port output enable time ($\overline{LR}/\overline{RB}$ to valide $\overline{IV}$ data input)			30				ns	
T_{MAS}	MCLK falling edge to address stable			140			$T_{1Q} + T_{2Q} + 40$	ns	Notes 2, 3 & 4
T_{IA}	Instruction to address			140			$T_{2Q} + 90$	ns	Notes 2, 3 & 5
T_{IVA}	Input data to address			85			85	ns	Notes 3 & 6
T_{MIS}	MCLK falling edge to instruction stable			30			$T_{1Q} - 20$	ns	Notes 2 & 10
T_{MIH}	Instruction hold time (MCLK falling edge)	55			$T_{1Q} + 5$			ns	Notes 2 & 8
T_{MWH}	MCLK falling edge to SC/WC rising edge	105		125	$T_{1Q} + T_{2Q} + 5$		$T_{1Q} + T_{2Q} + 25$	ns	Note 2
T_{MWL}	MCLK falling edge to SC/WC falling edge	5		15	5		15	ns	
T_{MIBS}	MCLK falling edge to $\overline{LB}/\overline{RB}$ (Input phase)	10		25	10		25	ns	
T_{IIBS}	Instruction to $\overline{LB}/\overline{RB}$ (Input phase)			25			25	ns	
T_{MOBS}	MCLK falling edge to $\overline{LB}/\overline{RB}$ (Output phase)	115		145	$T_{1Q} + T_{2Q} + 15$		$T_{1Q} + T_{2Q} + 45$	ns	Note 2
T_{MIDS}	MCLK falling edge to input data stable			55			$T_{1Q} + T_{2Q} - 45$	ns	Note 2
T_{MIDH}	Input data hold time (MCLK falling edge)	115			$T_{1Q} + T_{2Q} + 15$			ns	Note 2
T_{MODH}	Output data hold time (MCLK falling edge)	11			11			ns	
T_{MODS}	Output data stable (MCLK falling edge)	130		150	$T_{1Q} + T_{2Q} + 30$		$T_{1Q} + T_{2Q} + 50$	ns	Note 2

NOTES:
1. X1 and X2 inputs are driven by an external pulse generator with an amplitude of 1.5 volts; all timing parameters are measured at this voltage level.
2. Respectively, T_{1Q}, T_{2Q}, T_{3Q}, and T_{4Q} represent time intervals for the first, second, third, and fourth quarter cycles.
3. Capacitive loading for the address bus is 150 picofarads.
4. T_{MAS} is obtained by forcing a valid instruction and an I/O bus input to occur earlier than the specified minimum set up time.
5. T_{IA} is obtained by forcing a valid instruction input to occur earlier than the minimum set up time.
6. T_{IVA} is obtained by forcing a valid I/O bus input to meet the minium set up time.
7. T_{MIS} represents the setup time required by internal latches of the 8X305. In system applications, the instruction input may have to be valid before the worst-case set up time in order for the system to respond with a valid I/O bus input that meets the I/O bus input set up time (T_{IDS} and T_{MIDS}).
8. T_{MIH} represents the hold time required by internal latches of the 8X305. To generate proper $\overline{LB}/\overline{RB}$ signals, the instruction must be held valid until the address bus changes.
9. The minimum figure for these parameters represents the earliest time that I/O bus output drivers of the 8X305 will turn on.
10. This parameter represents the latest time that the output drivers of the input device should be turned off.

© IC MASTER 1984

TEST CIRCUITS

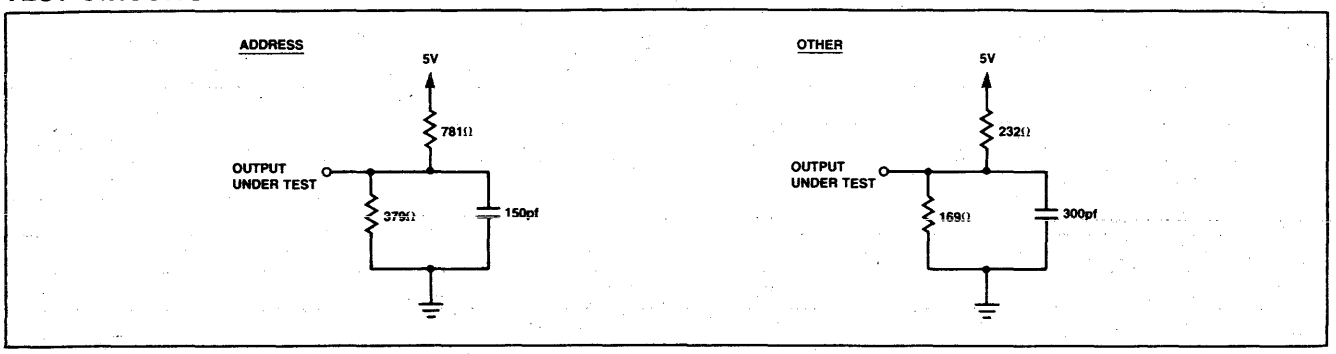

ABSOLUTE MAXIMUM RATINGS

Storage Temperature (T_{STG}) ratings are from −65 to +150°C

PIN	DESCRIPTION	RATING	UNIT	PIN	DESCRIPTION	RATING	UNIT
V_{CC}	Supply voltage	+7.0	V	All other pins	Logic input pins	5.5	V
X1, X2	Crystal input voltage	2.0	V				

DC CHARACTERISTICS (Military Part)

$4.5V \le V_{CC} \le 5.5V$, $-55°C \le T_C \le +125°C$

PARAMETER		TEST CONDITIONS	LIMITS Min	Typ	Max	UNIT	COMMENTS
V_{CC}	Supply voltage		4.5	5.0	5.5	V	
V_{IH}	High level input voltage		0.6 2.0		2.0	V	X1 and X2 All other pins
V_{IL}	Low level input voltage				0.4 0.8	V	X1 and X2 All other pins
V_{OH}	High level output voltage	V_{CC} = min; I_{OH} = −3mA	2.4			V	
V_{OL}	Low level output voltage	V_{CC} = min; I_{OL} = 6mA V_{CC} = min; I_{OL} = 16mA			0.55 0.55	V	A_0 through A_{12} All other outputs
V_{CR}	Regulator voltage	V_{CC} = 5V		3.5 3.1 2.6		V	T_C = −55°C T_C = 0°C T_C = 125°C
V_{IC}	Input clamp voltage	V_{CC} = min; I_{IN} = −10mA			−1.5	V	Crystal inputs X1 and X2 do not have internal clamp diodes.
I_{IH}	High level input current	V_{CC} = max V_{IH} = 0.6V V_{IH} = 4.5V			4.0 50	mA μA	X1 and X2 All other pins
I_{IL}	Low-level input current	V_{CC} = max; V_{IL} = 0.4V			−3 −0.3 −1.6 −0.4	mA	X1 and X2 $\overline{IV0}$-$\overline{IV7}$ I0-I15 $\overline{HALT}$ and $\overline{RESET}$
I_{OS}	Short circuit output current	V_{CC} = max; (Note: At any time, no more than one output should be connected to ground.)	−30		−140	mA	All output pins
I_{CC}	Supply current	V_{CC} = max			175 205	mA	T_C = 125°C T_C = −55°C
I_{REG}	Regulator control	V_{CC} = 5.0V	−10		−25	mA	Max available base drive for series-pass transistor
I_{CR}	Regulator current	V_{CC} = max			180 260	mA	T_C = 125°C T_C = −55°C

NOTES:
1. Operating temperature ranges are guaranteed after thermal equilibrium has been reached.
2. All voltages measured with respect to ground terminal.

© IC MASTER 1984

AC CHARACTERISTICS (Military Part)

CONDITIONS: $4.5V \leq V_{CC} \leq 5.5V$; $-55°C \leq T_C \leq 125°C$
LOADING: (See test circuits)

PARAMETER (Note 1)		LIMITS (INSTRUCTION CYCLE TIME = 200ns)			LIMITS (INSTRUCTION) CYCLE TIME > 200ns)			UNITS	COMMENTS
		Min	Typ	Max	Min	Typ	Max		
T_{PC}	Processor cycle time	250			250			ns	
T_{CP}	X1 clock period	125			125			ns	
T_{CH}	X1 clock high time	62			62			ns	
T_{CL}	X1 clock low time	62			62			ns	
T_{MCL}	MCLK low delay	15		40	15		40	ns	
T_W	MCLK pulse width	47		72	$T_{4Q} - 15$		$T_{4Q} + 10$	ns	Note 2
T_{MODO}	Output driver turn-on time (MCLK falling edge)	145		175	$T_{1Q} + T_{2Q} + 20$		$T_{1Q} + T_{2Q} + 50$	ns	Note 9
T_{DI}	Output driver turn-on time (SC/WC rising edge)	20			20			ns	Note 10
T_{DD}	Input data to output data	80		115	80		115	ns	
T_{MHS}	MCLK falling edge to $\overline{HALT}$ falling edge			40			$T_{1Q} - 22$	ns	Note 2
T_{MHH}	$\overline{HALT}$ hold time (MCLK falling edge)	80			$T_{1Q} + 18$			ns	Note 2
T_{ACC}	Program storage access time			90				ns	
T_{IO}	I/O port output enable time ($\overline{LB}/\overline{RB}$ to valid $\overline{IV}$ data input)			40				ns	
T_{MAS}	MCLK falling edge to address stable			160			$T_{1Q} + T_{2Q} + 35$	ns	Notes 2, 3 & 4
T_{IA}	Instruction to address			160			$T_{2Q} + 98$	ns	Notes 2, 3 & 5
T_{IVA}	Input data to address			90			90	ns	Notes 3 & 6
T_{MIS}	MCLK falling edge to instruction stable			40			$T_{1Q} - 22$	ns	Notes 2 & 10
T_{MIH}	Instruction hold time (MCLK falling edge)	70			$T_{1Q} + 8$			ns	Notes 2 & 8
T_{MWH}	MCLK falling edge to SC/WC rising edge	127		154	$T_{1Q} + T_{2Q} + 2$		$T_{1Q} + T_{2Q} + 29$	ns	Note 2
T_{MWL}	MCLK falling edge to SC/WC falling edge	5		25	5		25	ns	
T_{MIBS}	MCLK falling edge to $\overline{LB}/\overline{RB}$ (Input phase)	10		35	10		35	ns	
T_{IIBS}	Instruction to $\overline{LB}/\overline{RB}$ (Input phase)			30			30	ns	
T_{MOBS}	MCLK falling edge to $\overline{LB}/\overline{RB}$ (Output phase)	140		170	$T_{1Q} + T_{2Q} + 15$		$T_{1Q} + T_{2Q} + 45$	ns	Note 2
T_{MIDS}	MCLK faling edge to input data stable			75			$T_{1Q} + T_{2Q} - 50$	ns	Note 2
T_{MIDH}	Input data hold time (MCLK falling edge)	140			$T_{1Q} + T_{2Q} + 15$			ns	Note 2
T_{MODH}	Output data hold time (MCLK falling edge)	11			11			ns	
T_{MODS}	Output data stable (MCLK falling edge)	150		180	$T_{1Q} + T_{2Q} + 25$		$T_{1Q} + T_{2Q} + 55$	ns	Note 2

NOTES:
1. X1 and X2 inputs are driven by an external pulse generator with an amplitude of 1.5 volts; all timing parameters are measured at this voltage level.
2. Respectively, T_{1Q}, T_{2Q}, T_{3Q}, and T_{4Q} represent time intervals for the first, second, third, and fourth quarter cycles.
3. Capacitive loading for the address bus is 150 picofarads.
4. T_{MAS} is obtained by forcing a valid instruction and an I/O bus input to occur earlier than the specified minimum set up time.
5. T_{IA} is obtained by forcing a valid instruction input to occur earlier than the minimum set up time.
6. T_{IVA} is obtained by forcing a valid I/O bus input to meet the minium set up time.
7. T_{MIS} represents the setup time required by internal latches of the 8X305. In system applications, the instruction input may have to be valid before the worst-case set up time in order for the system to respond with a valid I/O bus input that meets the I/O bus input set up time (T_{IDS} and T_{MIDS}).
8. T_{MIH} represents the hold time required by internal latches of the 8X305. To generate proper $\overline{LB}/\overline{RB}$ signals, the instruction must be held valid until the address bus changes.
9. The minimum figure for these parameters represents the earliest time that I/O bus output drivers of the 8X305 will turn on.
10. This parameter represents the latest time that the output drivers of the input device should be turned off.

© IC MASTER 1984

INTERRUPT CONTROL COPROCESSOR 8X310

FEATURES

- **Three prioritized interrupts**
- **Subroutine handling capabilities**
- **4-level LIFO stack for return address storage**
- **Interrupt masking by software and hardware**
- **Stack full flag**
- **Directly compatible with 8X305 MicroController**
- **Bipolar ISL (Integrated Schottky Logic) and low-power Schottky technology**
- **Single +5 volt power supply**
- **0.6 inch, 40-pin DIP**

PRODUCT DESCRIPTION

The Signetics 8X310 Interrupt Control Coprocessor (ICC) supports the 8X305 MicroController in systems that are interrupt driven and those that require subroutine handling capabilities.

As shown in Figure 1, the ICC provides three prioritized interrupt request lines, INT 0 (highest priority), INT 1 and INT 2. A low-to-high transition applied to any of these input lines latches in an interrupt request which may be serviced when sampled by the ICC once each instruction cycle of the MicroController. When an interrupt request is serviced, the ICC forces the MicroController to jump to one of three fixed locations in program memory; instruction addresses 4, 5, and 6 correspond to INT 0, INT 1 and INT 2. At each of these addresses, the user programs a JMP instruction to another address where the user's interrupt service routine begins.

During interrupt servicing, the ICC also stores the proper return address into a four deep, Last-In-First-Out (LIFO) stack. At the conclusion of the interrupt service routine, the user program instructs the ICC to return to the main program at the location previously stored in the stack. The return operation is implemented by coding a special RETURN instruction which is decoded directly off the instruction bus by the ICC. There are five such special instructions relating to interrupt and subroutine handling functions performed by the ICC. These instruction codes are all treated as non-operational instructions (NOPs) by the MicroController.

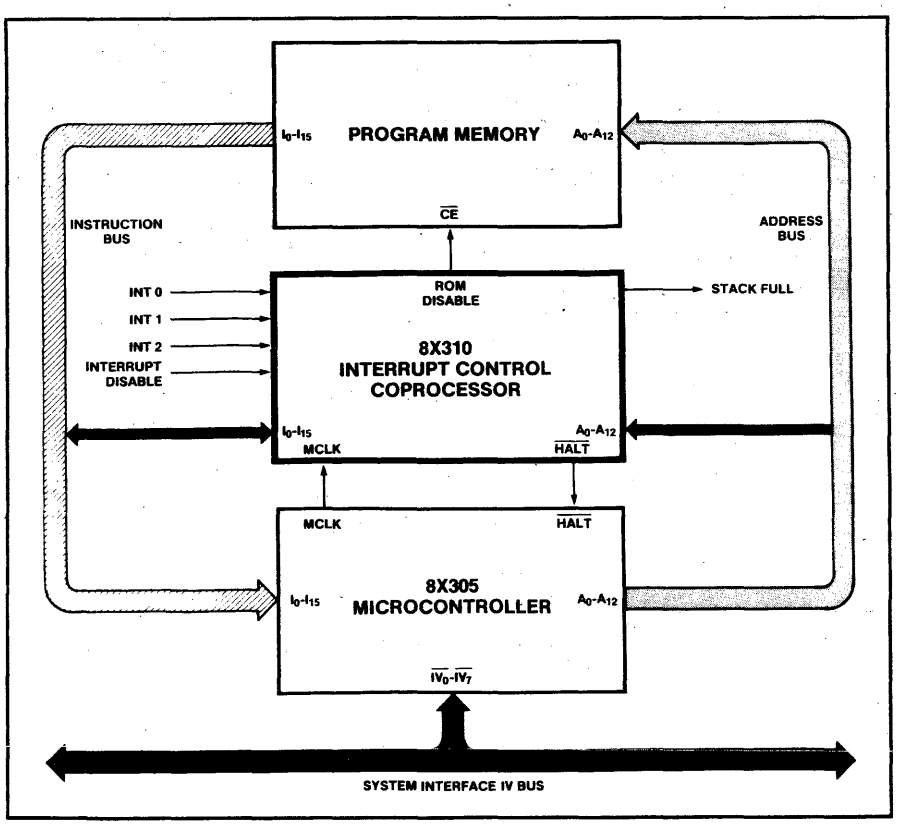

Figure 1. Typical System Connections Using ICC

PIN CONFIGURATION

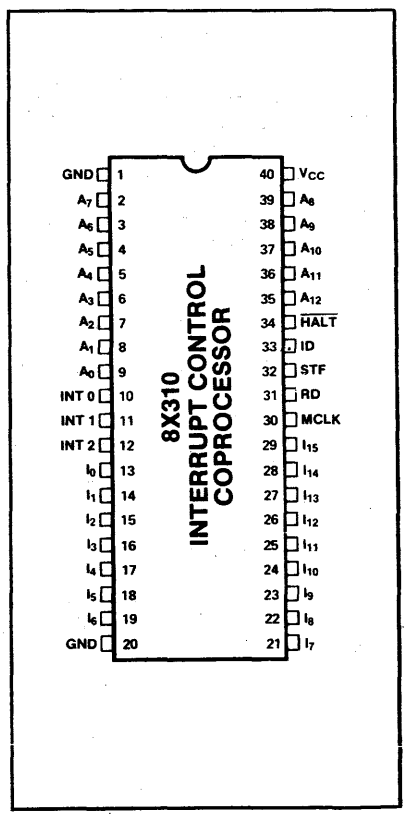

© IC MASTER 1984

An internal one-bit mask is used to inhibit interrupt servicing. Whenever the mask is set, the ICC does not respond to any pending interrupt requests; however, any requests remain latched for future servicing. The mask can be set and cleared either by the user program or automatically during certain ICC functions. The special instructions SET MASK and CLEAR MASK are provided for user control. The Interrupt Disable input also inhibits interrupt request servicing.

The ICC provides a facility for implementing subroutines in the user program. A special PUSH instruction directs the ICC to store the return address into the stack in a manner similar to interrupt servicing. The jump to the subroutine, however, is performed by the user program. Subroutines may be nested (called from within other subroutines) depending on remaining vacancies in the four deep stack.

In general, the ICC adds some useful and very flexible facilities to the 8X305-based system. It offers both hardware and software capabilities that can improve efficiency and decrease program size. These features, from both a chip and system aspect, are described in subsequent paragraphs.

FUNCTIONAL OPERATION

Basic Functions

The ICC performs the three general functions indicated below.

Function 1: Provides a means for the 8X305 MicroController to respond to interrupt requests by diverting the program flow of the 8X305 MicroController to the proper interrupt service routine or, in the case of a subroutine, the ICC stores the return address in the 4-level LIFO stack (Figure 2).

Function 2: Returns the user to the proper point in the main program for both interrupt and subroutine activities.

Function 3: Provides both automatic and programmed masking capabilities.

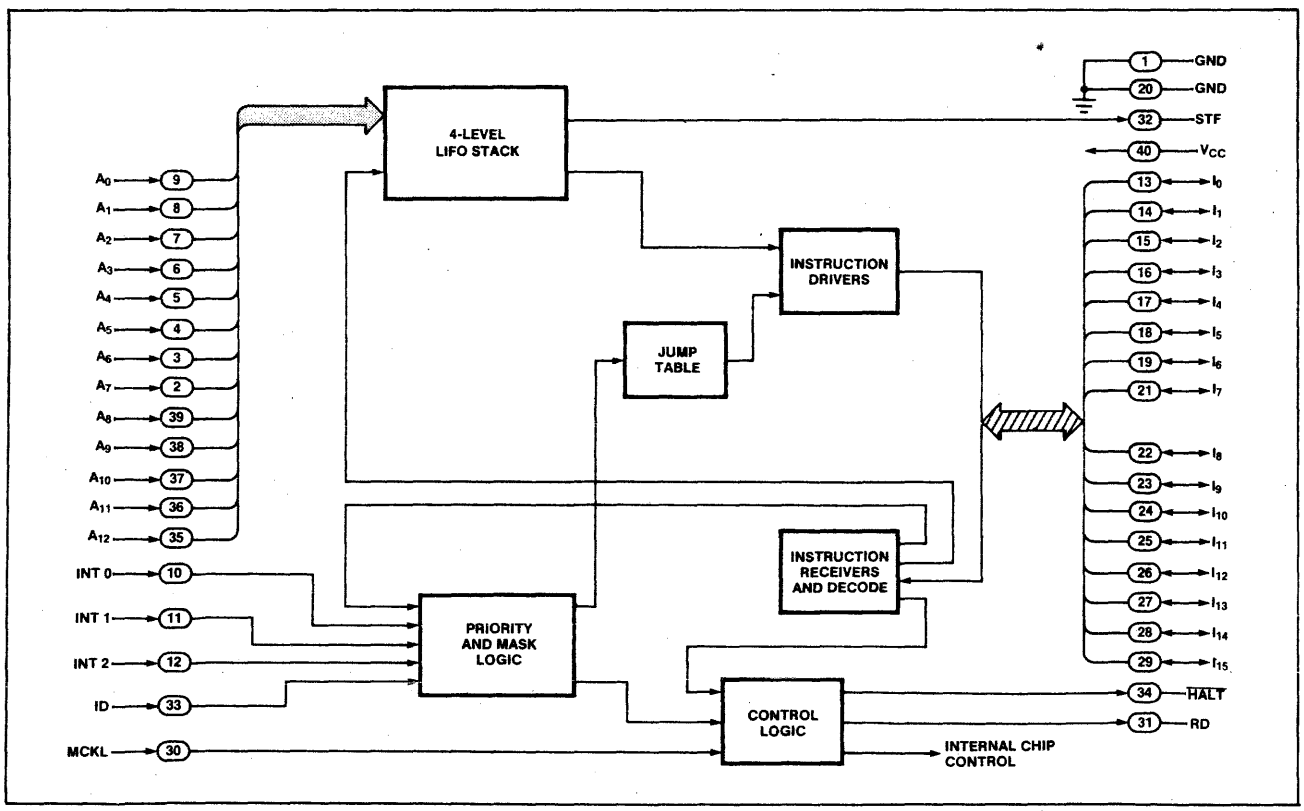

Figure 2. 8X310 Interrupt/Control Coprocessor — Functional Block Diagram

© IC MASTER 1984

DC ELECTRICAL CHARACTERISTICS

COMMERCIAL: V_{CC} = 5.0 V (±5%); 0° C ≤ T_A ≤ 70° C
MILITARY: V_{CC} = 5.0 V (±10%); T_A ≥ -55° C
T_C ≤ 125° C

ABSOLUTE MAXIMUM RATINGS

Parameter		Rating	Unit	Parameter		Rating	Unit
V_{CC}	Power supply voltage	+7	V DC	V_O	Off-state output voltage	+5.5	V DC
V_{IN}	Input voltage	+5.5	V DC	T_{STG}	Storage temperature range	−65 to +150	°C

Parameter		Test Conditions		Limits (Commercial) Min	Typ	Max	Limits (Military) Min	Typ	Max	Unit
V_{IH}	High Level Input Voltage			2.0			2.0			V
V_{IL}	Low Level Input Voltage					0.8			0.8	V
V_{OH}	High Level Output Voltage	V_{CC} = Min.; I_{OH} = −1.0 mA		2.4			2.4			V
V_{OL}	Low Level Output Voltage	V_{CC} = Min.	COMMERCIAL: I_{OL} = 8 mA			0.55				V
			MILITARY: I_{OL} = 4.25 mA						0.55	
V_{CL}	Input Clamp-Diode Voltage	V_{CC} = Min; I_{CL} = −10 mA				−1.5			−1.5	V
I_{IH}	High Level Input Current	V_{CC} = Max; V_{IH} = 2.7 V				100			100	μA
I_{IL}	Low Level Input Current	V_{CC} = Max; V_{IL} = 0.4 V				−550			−700	μA
I_{OS}	Short Circuit Output Current	V_{CC} = Max; V_O = 0 V		−15		−80	−15		−80	mA
I_{CC}	Supply Current	V_{CC} = Max; I_0-I_{15} = High-Z								mA
		T_A = 0° C[2]				200				
		T_A = 70° C				185				
		T_A = −55° C[2]							230	
		T_C = 125° C							170	

AC ELECTRICAL CHARACTERISTICS

LOADING: See TEST LOADING CIRCUITS

COMMERCIAL: V_{CC} = 5.0 V (±5%); 0° C ≤ T_A ≤ 70° C
MILITARY: V_{CC} = 5.0 V (±10%); T_A ≥ −55° C
T_C ≤ 125° C

Parameter		References From	To	Test Conditions	Limits (Commercial) Min	Typ	Max	Limits (Military) Min	Typ	Max	Unit
Pulse Widths:											
t_{WIH}	Interrupt High	↑INT_i	↓INT_i		30			30			ns
t_{WIL}	Interrupt Low	↓INT_i	↑INT_i		35			35			ns
t_{WMH}	MCLK High	↑MCLK	↓MCLK	For all Functions	40			47			ns
Propagation Delays:											
t_{PRH}	RD High	↑MCLK	↑RD	Interrupt or Return			70			75	ns
t_{PRL}	RD Low	↑MCLK	↓RD	Interrupt or Return			15			17	ns
t_{PHL}	HALT Low	↑MCLK	↓HALT	Interrupt or Return			70			87	ns
t_{PHH}	HALT High	↑MCLK	↑HALT	Interrupt or Return			65			75	ns
t_{PSH}	Stack Full High	↓MCLK	↑STF	Interrupt or Subroutine Call			105			105	ns
t_{PSL}	Stack Full Low	↓MCLK	↓STF	Return or Reset			110			115	ns

© IC MASTER 1984

AC ELECTRICAL CHARACTERISTICS (continued)

Parameter		References From	References To	Test Conditions	Limits (Commercial) Min	Limits (Commercial) Typ	Limits (Commercial) Max	Limits (Military) Min	Limits (Military) Typ	Limits (Military) Max	Unit
Setup Times:											
t_{SIH}	Interrupt Input Setup[3]	↑INT_i	↑MCLK		35			35			ns
t_{SA}	Address Setup	A_0-A_{13}	↑MCLK	Interrupt, Subroutine Call, or Reset	0			0			ns
t_{SC}	Instruction Setup[5]	I_{0-15}	↓MCLK	All Commands	Note 5			Note 5			ns
t_{SD}	Interrupt Disable Setup[3]	ID	↑MCLK		30			30			ns
Hold and Reset Recovery Times:											
t_{HIL}	Interrupt Low Input Hold[3]	↑MCLK	↑INT_i		15			15			ns
t_{HA}	Address Hold	↓MCLK	A_{0-13}	Subroutine Call or Reset	75			90			ns
t_{HC}	Instruction Hold	↓MCLK	I_{0-15}	All Commands	55			55			ns
t_{HD}	Interrupt Disable Hold[3]	↑MCLK	ID		25			25			ns
t_{RI}	Interrupt Reset Recovery[4]	↓MCLK	↑INT_i	Reset or Cancel Command	70			70			ns
Output Enable/Disable Delays:											
t_{OEC}	Instruction Output Enable	↑MCLK	I_{0-15}	Interrupt or Return			70			87	ns
t_{ODC}	Instruction Output Disable	↑MCLK	I_{0-15}	Interrupt or Return			40			47	ns

Notes:

1. All electrical characteristics are guaranteed after power is applied and thermal equilibrium has been reached.
2. The 200 and 230 milliampere values are worst case over the entire temperature range for the Commercial and Military parts, respectively.
3. Parameters t_{SIH}, t_{HIL}, T_{SD}, and t_{HD} are used only to determine whether an interrupt request will be serviced during the current or a subsequent instruction cycle. The INT_i and ID inputs are asynchronous and transitions on either input may safely occur at any time with respect to MCLK. A low-to-high transition on INT_i occurring after t_{SIH} and before t_{HIL} means only that it cannot be determined for sure whether or not the interrupt request will be honored during the current instruction cycle. Similarly, transitions on ID between t_{SD} and t_{HD} make it uncertain as to whether or not masking applies during the current instruction cycle.
4. When clearing interrupt requests (including a reset operation), any new low-to-high transitions appearing at the INT_i inputs that occur before t_{RI} risk being cleared and therefore ignored; however, any transition after t_{RI} is certain to be latched.
5. COMMERCIAL: t_{SC} (minimum) = 15 ns — t_{PRL} (actual).
   MILITARY: t_{SC} (minimum) = 17 ns — t_{PRL} (actual).
   (The required instruction enable time for the program memory depends on the sum of the t_{PRL} and t_{SC}.)

TEST SETUPS

RD, STF, and $\overline{HALT}$ Outputs —

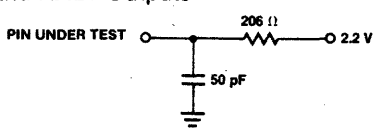

I_0-I_{15} Outputs (t_{OEC} and t_{ODC}) t_{PZH} and t_{PHZ}:

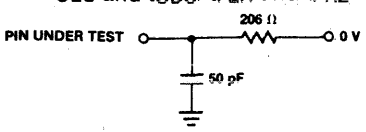

t_{PZL} and t_{PLZ}:

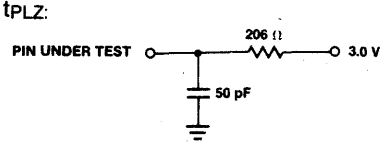

Notes:

1. V_{MEAS} = 1.5 V for all input signals and RD, STF, and HALT outputs.
2. For I_0-I_{15} (t_{OEC}): V_{MEAS} = 1.5 V
   For I_0-I_{15} (t_{ODC}): V_{MEAS} (t_{PLZ}) = V_{OL} + 0.5 V
   V_{MEAS} (t_{PHZ}) = V_{OH} − 0.5 V

© IC MASTER 1984

BUS INTERFACE REGISTER ARRAY

8X320

N8X320N

PRODUCT DESCRIPTION

The Signetics 8X320 Bus Interface Register Array is a dual-port RAM memory designed for use between a host processor and a peripheral processor. Specifically, the register array provides a convenient and economical interface between the 8X305 Micro-Controller (secondary port) and User's Host System (primary port); the host can be almost any bus-oriented device—another processor, a minicomputer, or a mainframe computer. The host has 8-bit (byte) or 16-bit (word) access to the primary port; data can be read-from or written-into any memory location as determined by the primary-port address and control lines. The secondary port (8X305 bus) consists of eight input/output lines and four bus control lines. To implement the secondary-port interface, an 8-bit memory location is addressed during one machine cycle and, during another cycle, data is read or written under control of the secondary (8X305) processor. Both primary and secondary ports feature three-state outputs and both ports are bidirectional.

Besides the convenience and economy of a two-port memory, the array also provides simple handshake control via two 8-bit flag registers, logic to facilitate DMA transfers, and a write-protect feature for the primary port in both byte and word modes of operation.

FEATURES

- **16-Byte/2-Port interface**
- **8 or 16 Bit primary-port (Host) interface (user selectable)**
- **8-Bit secondary-port interface**
- **Two 8-Bit flag registers (handshake control)**
- **DMA or programmed I/O operation**
- **Two Three-State Bidirectional Ports**
- **Secondary Port is bus compatible with 8X305**
- **Single 5V supply**
- **40-Pin package**

BLOCK DIAGRAM

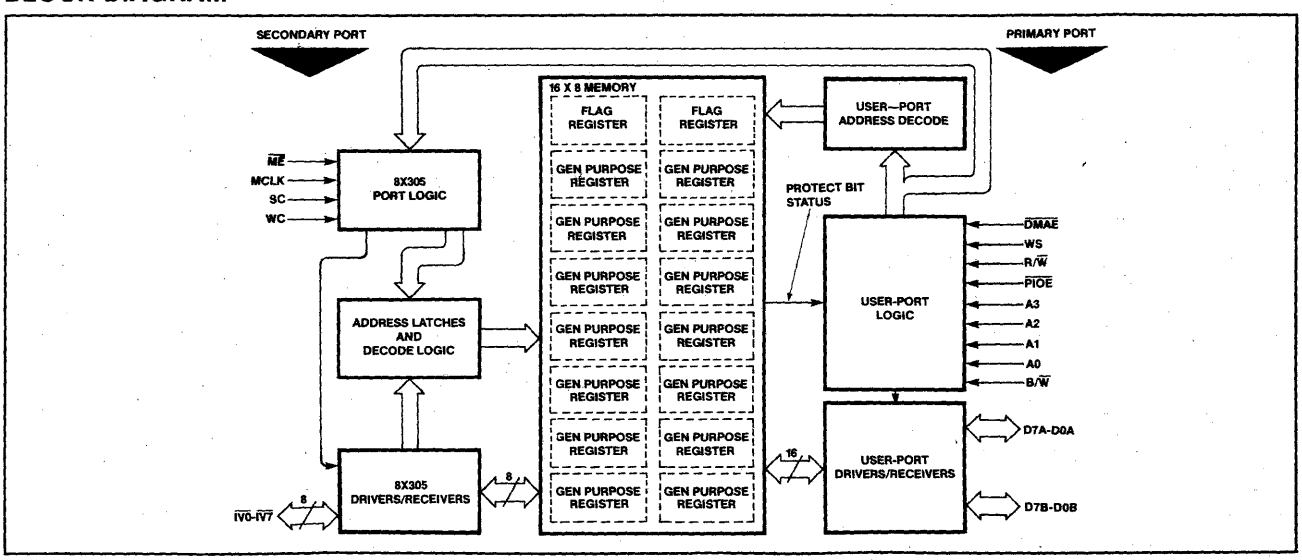

8X320 Applications

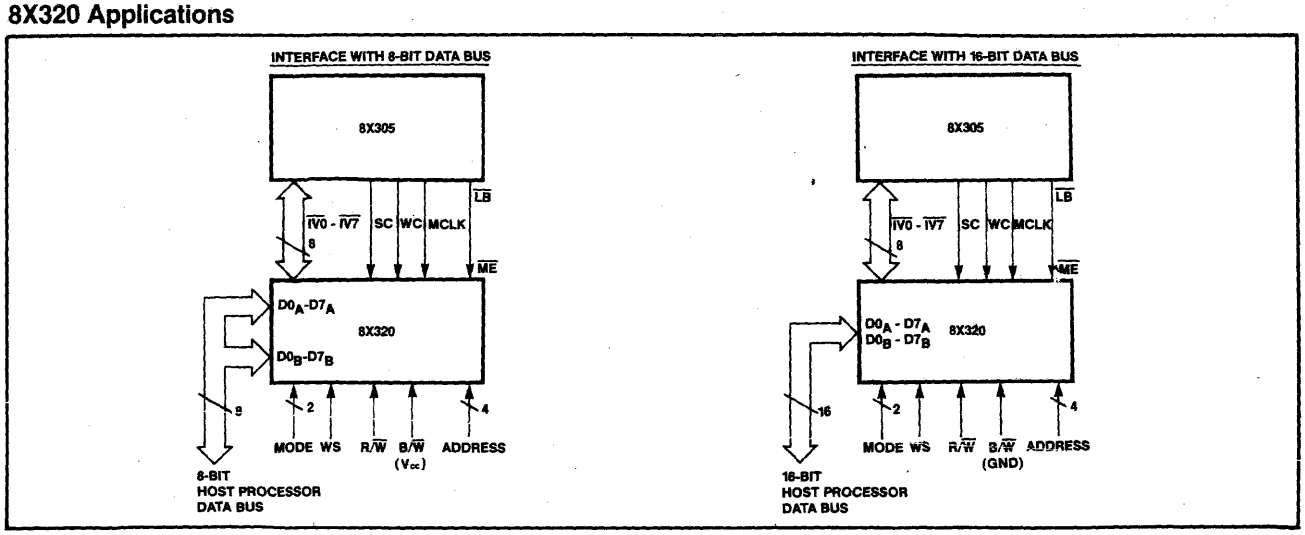

DC CHARACTERISTICS $0°C \leq T_A \leq 70°C$; $4.75V \leq V_{CC} \leq 5.25V$

PARAMETER		TEST CONDITIONS[1, 2]	LIMITS			UNIT
			Min	Typ	Max	
V_{CC}	Supply voltage		4.75	5	5.25	V
V_{IN} (L)	Low level input voltage				0.80	V
V_{IN} (H)	High level input voltage		2.0			V
V_{OL}	Low level output voltage	V_{CC} = 4.75V; I_{OL} = 16mA			0.55	V
V_{OH}	High level output voltage	V_{CC} = 4.75V; I_{OH} = −3mA	2.40			V
V_{CL}	Input clamp voltage	I_I = −5mA			−1.00	V
I_{CC}	Supply current	V_{CC} = 5.25V (Both ports high-Z)			270	mA
I_{OS}	Short circuit output current[3]	V_{CC} = 4.75V	−20		−100	mA
I_{IN} (L)	WC, MCLK, SC, & $\overline{ME}$	V_{CC} = 5.25V; V_{IL} = 0.50V			−1.0	mA
I_{IN} (L)	B/$\overline{W}$	V_{CC} = 5.25V; V_{IL} = 0.50V			−1.6	mA
I_{IN} (L)	A0-A3	V_{CC} = 5.25V; V_{IL} = 0.50V			−1.0	mA
I_{IN} (L)	$\overline{DMAE}$	V_{CC} = 5.25V; V_{IL} = 0.5V			−800	μA
I_{IN} (L)	WS, $\overline{PIOE}$, & R/$\overline{W}$	V_{CC} = 5.25V; V_{IL} = 0.5V			−400	μA
I_{IN} (L)	$\overline{IV0}$-$\overline{IV7}$	V_{CC} = 5.25V; V_{IL} = 0.5V			−400 each line	μA
I_{IN} (L)	$D0_A$-$D7_A$/$D0_B$-$D7_B$	V_{CC} = 5.25V; V_{IL} = 0.5V			−400 each line	μA
I_{IN} (H)	WC, SC, MCLK, & $\overline{ME}$	V_{CC} = 5.25V; V_{IH} = 5.25V			100	μA
I_{IN} (H)	B/$\overline{W}$	V_{CC} = 5.25V; V_{IH} = 5.25V			240	μA
I_{IN} (H)	A0	V_{CC} = 5.25V; V_{IH} = 5.25V			120	μA
I_{IN} (H)	A1-A3	V_{CC} = 5.25V; V_{IH} = 5.25V			60	μA
I_{IN} (H)	$\overline{DMAE}$	V_{CC} = 5.25V; V_{IH} = 5.25V			120	μA
I_{IN} (H)	WS, $\overline{PIOE}$, & R/$\overline{W}$	V_{CC} = 5.25V; V_{IH} = 5.25V			60	μA
I_{IN} (H)	$\overline{IV0}$-$\overline{IV7}$ and $D0_A$-$D7_A$/$D0_B$-$D7_B$	V_{CC} = 5.25V; V_{IH} = 5.25V			100	μA

Notes:
1. Operating temperature ranges are guaranteed after terminal equilibrium has been reached.
2. All voltages are measured with respect to ground terminal.
3. Short only one output at a time.

© IC MASTER 1984

BUS INTERFACE REGISTER ARRAY

8X320

N8X320N

PRODUCT DESCRIPTION

The Signetics 8X320 Bus Interface Register Array is a dual-port RAM memory designed for use between a host processor and a peripheral processor. Specifically, the register array provides a convenient and economical interface between the 8X305 Micro-Controller (secondary port) and User's Host System (primary port); the host can be almost any bus-oriented device—another processor, a minicomputer, or a mainframe computer. The host has 8-bit (byte) or 16-bit (word) access to the primary port; data can be read-from or written-into any memory location as determined by the primary-port address and control lines. The secondary port (8X305 bus) consists of eight input/output lines and four bus control lines. To implement the secondary-port interface, an 8-bit memory location is addressed during one machine cycle and, during another cycle, data is read or written under control of the secondary (8X305) processor. Both primary and secondary ports feature three-state outputs and both ports are bidirectional.

Besides the convenience and economy of a two-port memory, the array also provides simple handshake control via two 8-bit flag registers, logic to facilitate DMA transfers, and a write-protect feature for the primary port in both byte and word modes of operation.

FEATURES

- **16-Byte/2-Port Interface**
- **8 or 16 Bit primary-port (Host) interface (user selectable)**
- **8-Bit secondary-port interface**
- **Two 8-Bit flag registers (handshake control)**
- **DMA or programmed I/O operation**
- **Two Three-State Bidirectional Ports**
- **Secondary Port is bus compatible with 8X305**
- **Single 5V supply**
- **40-Pin package**

BLOCK DIAGRAM

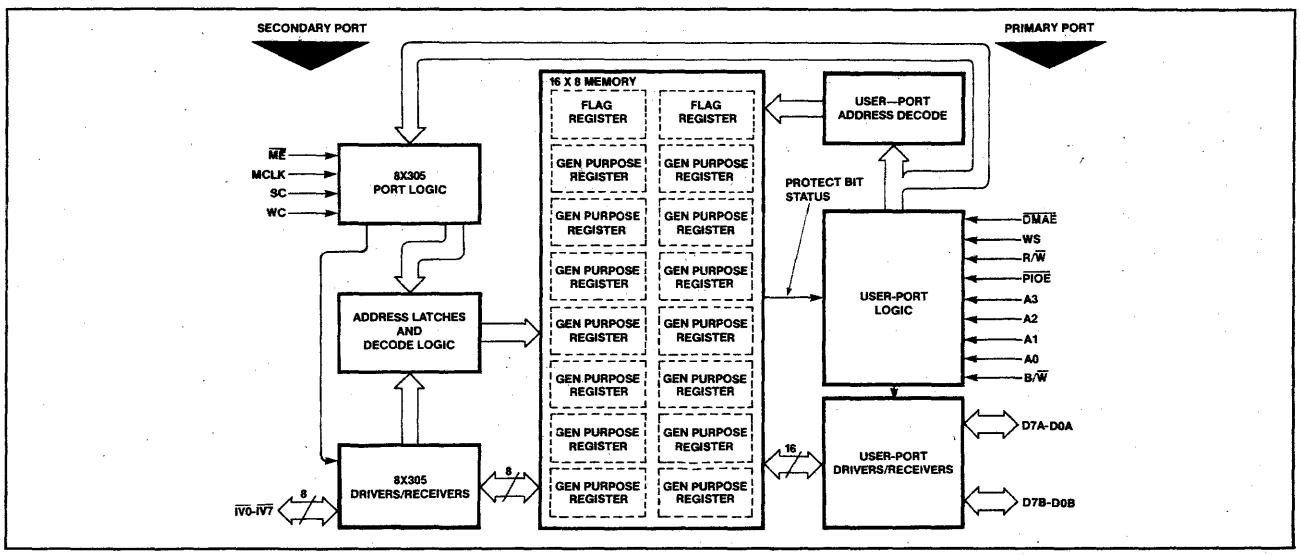

8X320 Applications

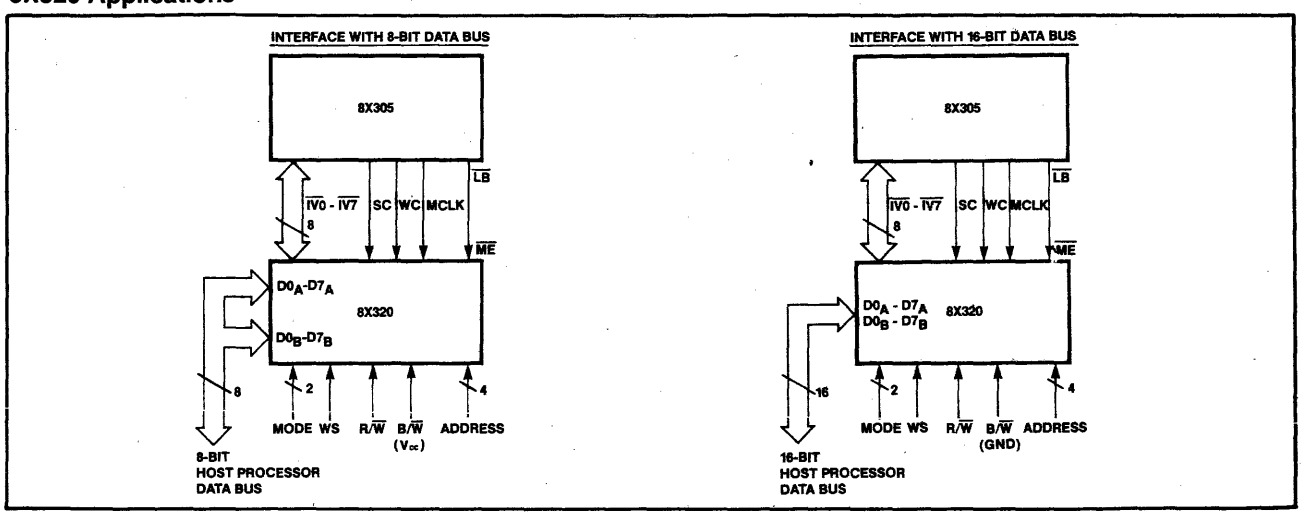

© IC MASTER 1984

DC CHARACTERISTICS $0°C \leq T_A \leq 70°C$; $4.75V \leq V_{CC} \leq 5.25V$

PARAMETER		TEST CONDITIONS[1, 2]	LIMITS			UNIT
			Min	Typ	Max	
V_{CC}	Supply voltage		4.75	5	5.25	V
$V_{IN\ (L)}$	Low level input voltage				0.80	V
$V_{IN\ (H)}$	High level input voltage		2.0			V
V_{OL}	Low level output voltage	$V_{CC} = 4.75V$; $I_{OL} = 16mA$			0.55	V
V_{OH}	High level output voltage	$V_{CC} = 4.75V$; $I_{OH} = -3mA$	2.40			V
V_{CL}	Input clamp voltage	$I_I = -5mA$			−1.00	V
I_{CC}	Supply current	$V_{CC} = 5.25V$ (Both ports high-Z)			270	mA
I_{OS}	Short circuit output current[3]	$V_{CC} = 4.75V$	−20		−100	mA
$I_{IN\ (L)}$	WC, MCLK, SC, & $\overline{ME}$	$V_{CC} = 5.25V$; $V_{IL} = 0.50V$			−1.0	mA
$I_{IN\ (L)}$	B/$\overline{W}$	$V_{CC} = 5.25V$; $V_{IL} = 0.50V$			−1.6	mA
$I_{IN\ (L)}$	A0-A3	$V_{CC} = 5.25V$; $V_{IL} = 0.50V$			−1.0	mA
$I_{IN\ (L)}$	$\overline{DMAE}$	$V_{CC} = 5.25V$; $V_{IL} = 0.5V$			−800	μA
$I_{IN\ (L)}$	WS, $\overline{PIOE}$, & R/$\overline{W}$	$V_{CC} = 5.25V$; $V_{IL} = 0.5V$			−400	μA
$I_{IN\ (L)}$	$\overline{IV0}$-$\overline{IV7}$	$V_{CC} = 5.25V$; $V_{IL} = 0.5V$			−400 each line	μA
$I_{IN\ (L)}$	$D0_A$-$D7_A$/$D0_B$-$D7_B$	$V_{CC} = 5.25V$; $V_{IL} = 0.5V$			−400 each line	μA
$I_{IN\ (H)}$	WC, SC, MCLK, & $\overline{ME}$	$V_{CC} = 5.25V$; $V_{IH} = 5.25V$			100	μA
$I_{IN\ (H)}$	B/$\overline{W}$	$V_{CC} = 5.25V$; $V_{IH} = 5.25V$			240	μA
$I_{IN\ (H)}$	A0	$V_{CC} = 5.25V$; $V_{IH} = 5.25V$			120	μA
$I_{IN\ (H)}$	A1-A3	$V_{CC} = 5.25V$; $V_{IH} = 5.25V$			60	μA
$I_{IN\ (H)}$	$\overline{DMAE}$	$V_{CC} = 5.25V$; $V_{IH} = 5.25V$			120	μA
$I_{IN\ (H)}$	WS, $\overline{PIOE}$, & R/$\overline{W}$	$V_{CC} = 5.25V$; $V_{IH} = 5.25V$			60	μA
$I_{IN\ (H)}$	$\overline{IV0}$-$\overline{IV7}$ and $D0_A$-$D7_A$/$D0_B$-$D7_B$	$V_{CC} = 5.25V$; $V_{IH} = 5.25V$			100	μA

Notes:
1. Operating temperature ranges are guaranteed after terminal equilibrium has been reached.
2. All voltages are measured with respect to ground terminal.
3. Short only one output at a time.

© IC MASTER 1984

AC CHARACTERISTICS OF PRIMARY PORT

$0°C \leq T_A \leq 70°C$; $4.75V \leq V_{CC} \leq 5.25V$
Loading: See Test Circuit

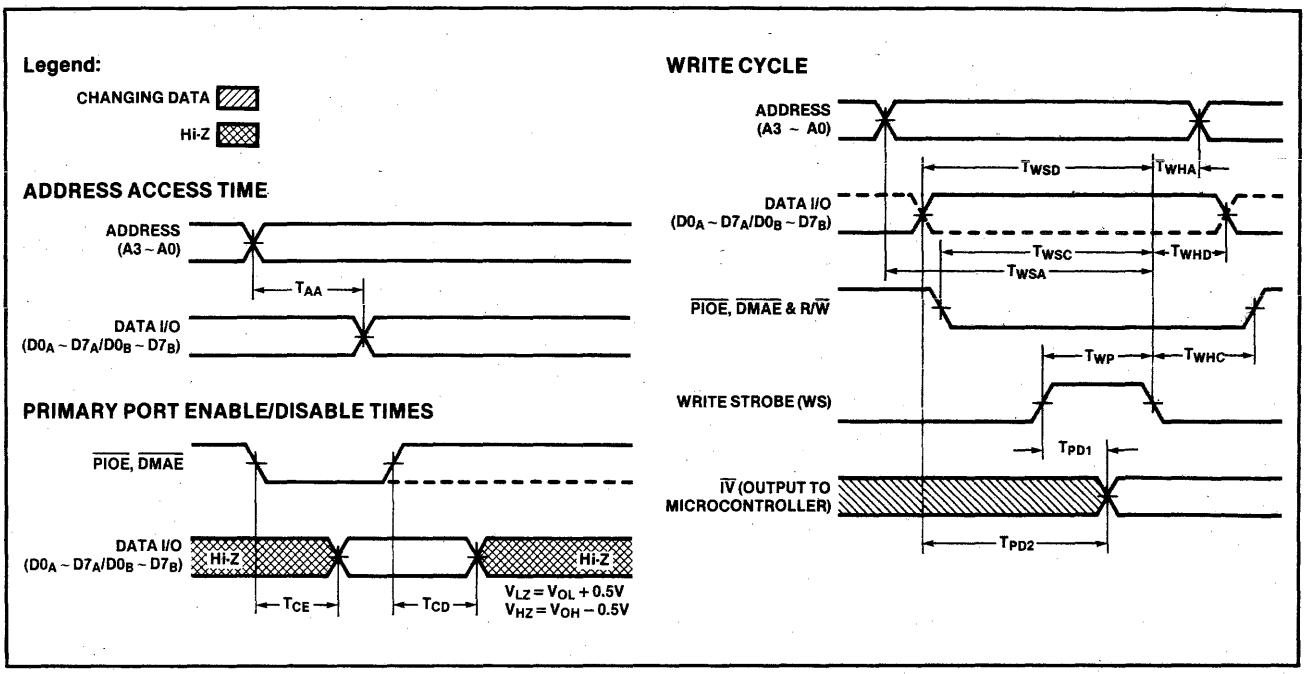

	PARAMETER	FROM	TO	LIMITS Min	LIMITS Typ	LIMITS Max	UNIT
T_{AA}	Address Access Time	A3-A0	$D0_A$-$D7_A$/$D0_B$-$D7_B$			45	ns
T_{CE}	Primary port enable time	↓PIOE ↓DMAE	$D0_A$-$D7_A$/$D0_B$-$D7_B$			30	ns
T_{CD}	Primary port disable time	↑PIOE ↑DMAE	$D0_A$-$D7_A$/$D0_B$-$D7_B$			35	ns
T_{WSA}	Address setup time	A3-A0	↓WS	40			ns
T_{WHA}	Address hold time	↓WS	A3-A0	0			ns
T_{WSD}	Primary port data setup time	$D0_A$-$D7_A$/$D0_B$-$D7_B$	↓WS	30			ns
T_{WHD}	Primary port data hold time	↓WS	$D0_A$-$D7_A$/$D0_B$-$D7_B$	0			ns
T_{WSC}	Write mode control setup time	PIOE DMAE R/W	↓WS ↓WS ↓WS	30 40 30			ns ns ns
T_{WHC}	Write mode control hold time	↓WS	PIOE DMAE R/W	10 10 10			ns ns ns
T_{WP}	Write strobe pulse width			25			ns
T_{PD1}[1]	Primary port data delay	$D0_A$-$D7_A$/$D0_B$-$D7_B$	IV0-IV7			75	ns
T_{PD2}[2]	Primary port data delay from WS	↑WS	IV0-IV7			75	ns

Notes:
1. Measurement with Write Strobe set High and the control signals of the secondary port set for output data from the same register.
2. Measurement with primary port data stable and control signals of secondary port set for output data from the same register.

AC CHARACTERISTICS OF SECONDARY PORT

$0°C \leq T_A \leq 70°C$, $4.75V \leq V_{CC} \leq 5.25V$
Loading: See Test Circuit

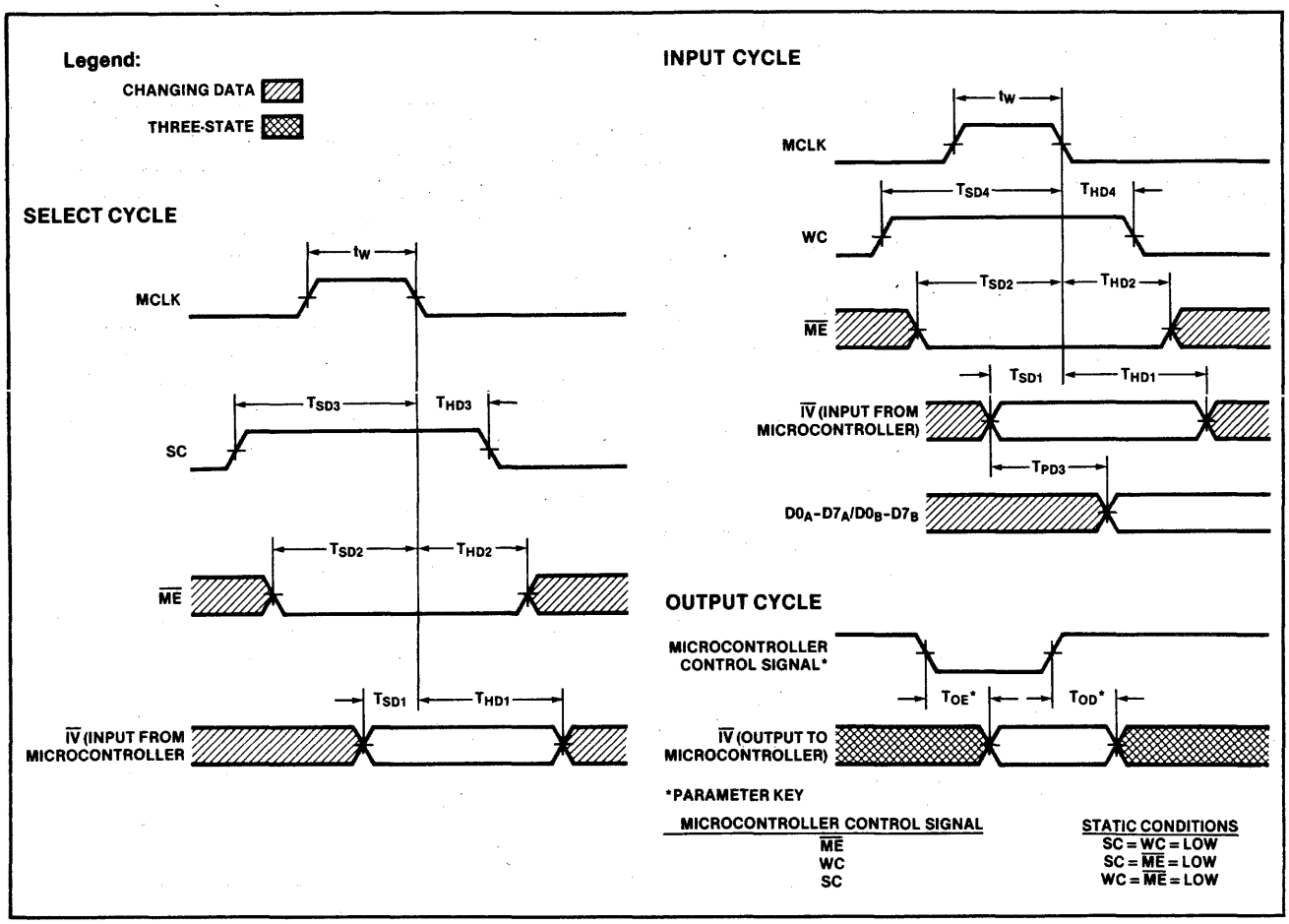

	PARAMETER	FROM	TO	LIMITS			UNIT
				Min	Typ	Max	
t_W	MCLK pulse width			30			ns
T_{SD1}	Data setup time	$\overline{IV0}$–$\overline{IV7}$	↓MCLK	35			ns
T_{SD2}	$\overline{ME}$ setup time	$\overline{ME}$	↓MCLK	30			ns
T_{SD3}	SC setup time	SC	↓MCLK	30			ns
T_{SD4}	WC setup time	WC	↓MCLK	30			ns
T_{HD1}	Data hold time	↓MCLK	$\overline{IV0}$–$\overline{IV7}$	0			ns
T_{HD2}	$\overline{ME}$ hold time	↓MCLK	$\overline{ME}$	0			ns
T_{HD3}	SC hold time	↓MCLK	SC	0			ns
T_{HD4}	WC hold time	↓MCLK	WC	0			ns
T_{PD3} (Note)	$\overline{IV}$ propagation delay	$\overline{IV}$	$D0_A$–$D7_A$/$D0_B$–$D7_B$			45	ns
T_{OE}	Output enable	$\overline{ME}$, SC, or WC	$\overline{IV0}$–$\overline{IV7}$			30	ns
T_{OD}	Output disable	$\overline{ME}$, SC, or WC	$\overline{IV0}$–$\overline{IV7}$			20	ns

Note:
Measured with MCLK = High and control signals of the primary port set for output data from the same register.

© IC MASTER 1984

FLOPPY DISK FORMATTER/CONTROLLER 8X330

N8X330N

PRODUCT DESCRIPTION

The Signetics 8X330 Floppy Disk Formatter/Controller is a special purpose member of the 8X300 Family designed to provide all control and data transfer functions required for diskette drives. The device is programmable, permitting the use of virtually any format on the diskette. It is capable of data rates of up to 1 Megabit/second to support both current generation and future drives. The 8X330 is unique among Floppy Disk controller ICs in that all functions and encoding schemes are supported on the chip, including a PLL data separator, write precompensation, address mark and preamble detection, and power failure protection. In addition, 16 bytes of scratchpad RAM are provided for storage of control and status parameters. Twelve user definable command and status lines are also provided for. Using the 8X330 coupled with an 8X305 MicroController and an external low pass filter, a complete controller can be built using less than ten ICs. If desired, Error Checking and Correction (ECC) can be implemented in 8X305 software since the 8X330 optionally provides the CRC remainder required to perform correction. The 8X330 Floppy Disk Formatter/Controller is implemented using a combination of Bipolar Schottky and I^2L technologies to provide these advanced functions.

FEATURES

- **Single or double density encoding/decoding**
- **On-chip data separator**
- **Programmable:**
  - **FM, MFM, and M^2FM encoding/decoding**
  - **Preamble Polarity**
  - **Data transfer rate**
  - **Address mark encoding/decoding**
  - **Sector length**
  - **Output port (7-bits disk command)**
  - **Input port (5-bits disk status)**
- **Write Precompensation with on/off control**
- **On-chip phase lock loop**
- **CRC generator with software-controlled error correction capabilities**
- **40-pin package**
- **+5 volt operation**

BLOCK DIAGRAM

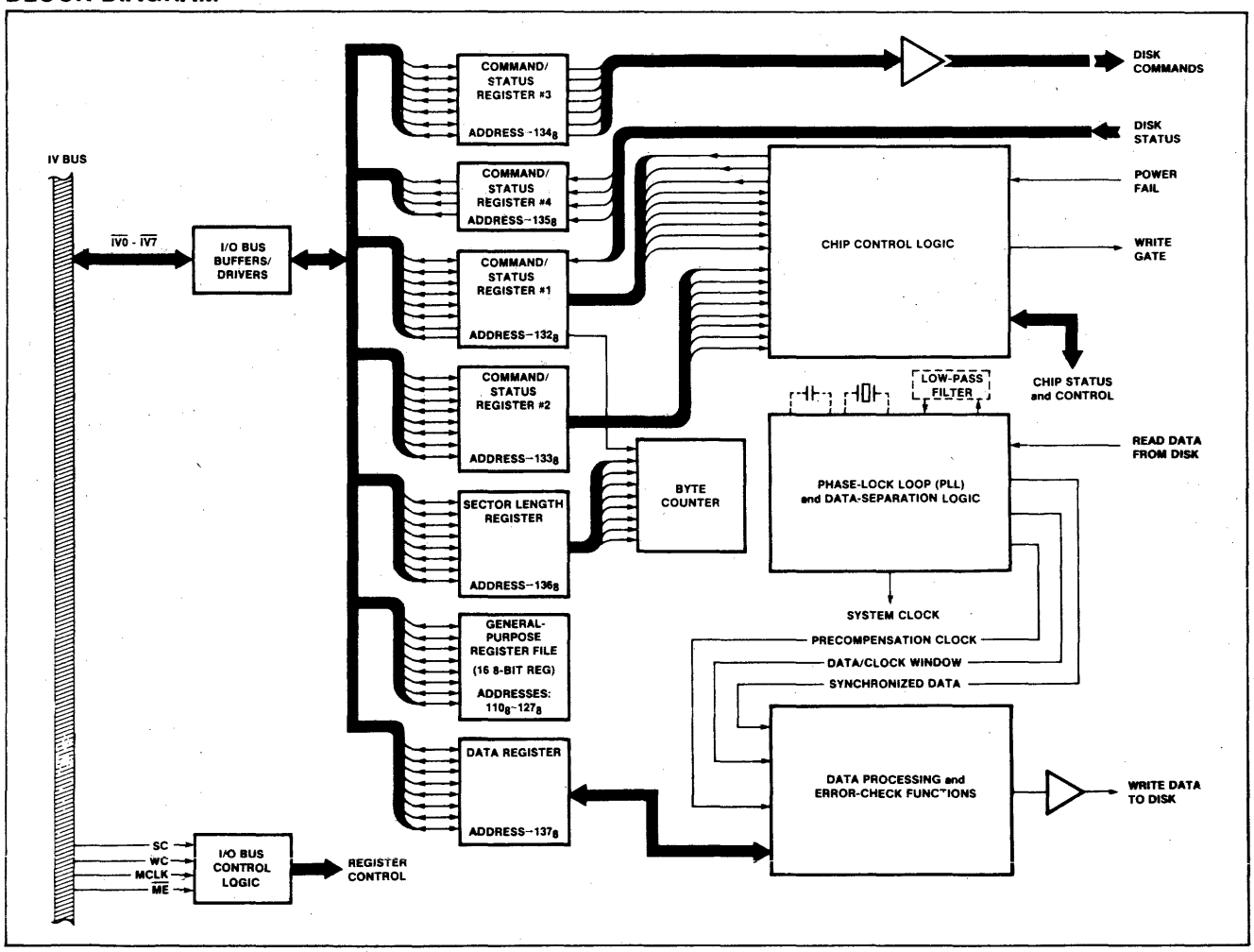

DC CHARACTERISTICS V_{CC} = 5V (±5%), T_A = 0°C to 70°C

PARAMETER		TEST CONDITIONS	LIMITS Min	LIMITS Typ	LIMITS Max	UNITS	COMMENTS
V_{IH}	High level input voltage		2.0		V_{CC}	V	For all inputs except X1, X2, C1, C2, CCO, and V_{CR}
V_{IL}	Low level input voltage		−1.0		0.8	V	
V_{CC}	Supply voltage		4.75	5.0	5.25	V	5V (±5%)
V_{CR}	Regulator voltage	V_{CC} = 5V		3.1		V	From series-pass transistor
V_{CL}	Input clamp voltage	V_{CC} = Min I_{IN} = −5mA	−1.0			V	Inputs X1, X2, C1, C2, and CCO do not have internal clamp diodes.
V_{OH}	High level output voltage	V_{CC} = Min; I_{OH} = −0.4mA	2.7			V	DC1 through DC7 (Pins 6-12) & $\overline{DW}$ (Pin 4)
		V_{CC} = Min; I_{OH} = −3mA	2.4			V	$\overline{IV0}$-$\overline{IV7}$ (Pins 25-32)
V_{OL}	Low level output voltage	V_{CC} = Min; I_{OL} = 8mA			0.5	V	DC1 through DC7 (Pins 6-12); $\overline{PUP}$, $\overline{PDN}$ (Pins 33, 34); $\overline{DW}$ (Pin 4)
		V_{CC} = Min; I_{OL} = 16mA			0.55	V	$\overline{IV0}$-$\overline{IV7}$ (Pins 25-32)
		V_{CC} = Min; I_{OL} = 40mA			0.55	V	$\overline{WG}$ (Pin 19)
I_{CEX}	Open-collector leakage current with output set to 1.	V_{CC} = Min; V_{OUT} = V_{CC}			100	μA	$\overline{WG}$ (Pin 19); $\overline{PUP}$ (Pin 34); $\overline{PDN}$ (Pin 33)
I_{IH}	High level input current	V_{CC} = Max; V_{IN} = 2.7V			20	μA	DS1-DS5 (Pins 13-17); $\overline{PF}$ (Pin 18); $\overline{DR}$ (Pin 5)
					40	μA	$\overline{ME}$ (Pin 21); MCLK (Pin 22); SC (Pin 23); WC (Pin 24)
		V_{CC} = Max; V_{IN} = 5.25V; CCO (Pin 35) input current = 0mA			4	mA	With C1 (Pin 36) under test, C2 (Pin 37) is open and, vice-versa.
		V_{CC} = Max; V_{IN} = 5.25V CCO (Pin 35) input current = 1mA			2	mA	
		V_{CC} = Max; V_{IN} = 0.6V			4	mA	With X2 (Pin 2) under test, X1 (Pin 3) is open and, vice-versa.
		V_{CC} = Max; V_{IN} = 4.5V			50	μA	$\overline{IV0}$ - $\overline{IV7}$ (pins 25-32)
V_{CCO}	Input voltage for current-controlled oscillator	V_{CC} = 5V; T_A = 25°C CCO input current (Pin 35) = 300 μA		750		mV	

© IC MASTER 1984

DC CHARACTERISTICS (Cont'd) V_{CC} = 5V (±5%), T_A = 0°C to 70°C

PARAMETER		TEST CONDITIONS	LIMITS Min	LIMITS Typ	LIMITS Max	UNITS	COMMENTS
I_{IL}	Low level input current	V_{CC} = Max; V_{IN} = 0.4V			−400	μA	DS1-DS5 (Pins 13-17); $\overline{PF}$ (Pin 18); $\overline{DR}$ (Pin 5)
					−800	μA	$\overline{ME}$ (Pin 21); MCLK (pin 22); SC (Pin 23); WC (Pin 24)
					−4	mA	X1 (Pin 2), X2 (Pin 3), with X1 under test, X2 is open and, vice-versa.
		V_{CC} = Max V_{IN} = 0.5V			−550	μA	$\overline{IV0}$-$\overline{IV7}$ (Pins 25-32)
I_{OS}	Output short-circuit current	V_{CC} = Max; Output = "1"; V_{OUT} = "0".	−15		−100	mA	DC1-DC7 (Pins 6-12) & $\overline{DW}$ (Pin 4)
		(NOTE At any time, no more than one output should be connected to ground)	−30		−140	mA	$\overline{IV0}$-$\overline{IV7}$ (Pins 25-32)
I_{CC}	(Pin 40)	V_{CC} = Max			200	mA	
I_{CR}		V_{CC} = Max			250	mA	
I_{REG}	(Pin 39)	V_{CC} = 5V; V_{CR} = 0V & V_R = 2V	−16		−27	mA	

NOTES
1. Operating temperature ranges are guaranteed after thermal equilibrium has been reached.
2. All voltages measured with respect to ground terminal.
3. Unless otherwise specified, each test requires that V_{CR} be supplied through a series-pass transistor as shown in the accompanying drawing.

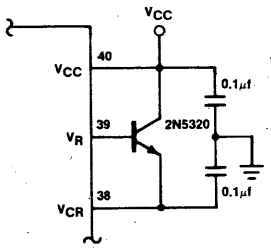

© IC MASTER 1984

AC CHARACTERISTICS V_{CC} = 5V (±5%), T_A = 0°C to 70°C

MNEMONIC	REFERENCE	INPUT	OUTPUT	Min	Typ	Max	COMMENTS
t_{PD}		$\overline{PF}$	$\overline{WG}$			60ns	Refer to Note 3 and Test Loading Circuit #1.
t_{PD}		MCLK	$\overline{WG}$			100ns	
t_{PD}		MCLK	$\overline{WG}$			100ns	
t_{PD}		MCLK	DC1-7			70ns	Refer to Note 3 and Test Loading Circuit #2.
t_{PD}		MCLK	DC1-7			70ns	
t_{pw}		$\overline{PF}$		50ns			
t_{pw}		$\overline{DR}$		50ns			
t_{pw}			$\overline{DW}$				Note 1
t_{SETUP}	SC	Input on DS1-5		55ns			Note 2
t_{SETUP}	WC	Input on DS1-5		55ns			Note 2
t_{SETUP}	$\overline{ME}$	Input on DS1-5		55ns			Note 2
t_{HOLD}	SC	Input on DS1-5		0ns			Note 2
t_{HOLD}	WC	Input on DS1-5		0ns			Note 2
t_{HOLD}	$\overline{ME}$	Input on DS1-5		0ns			Note 2
t_{OE}—$\overline{ME}$, SC & WC		$\overline{ME}$, SC, WC	I/O bus			25ns	Refer to Test Loading Circuit #3.
t_{OD}—$\overline{ME}$, SC & WC		$\overline{ME}$, SC, WC	I/O bus (three-state)			30ns	
t_w (MCLK pulse width)		MCLK		45ns			
t_{SD} (data setup time)	MCLK	I/O bus		50ns			
t_{SD} ($\overline{ME}$ setup time)	MCLK	$\overline{ME}$		45ns			
t_{SD} (SC setup time)	MCLK	SC		45ns			
t_{SD} (WC setup time)	MCLK	WC		45ns			
t_{HD} (data hold time)	MCLK	I/O bus		0ns			
t_{HD} ($\overline{ME}$ hold time)	MCLK	$\overline{ME}$		0ns			
t_{HD} (SC hold time)	MCLK	SC		0ns			
t_{HD} (WC hold time)	MCLK	WC		0ns			

NOTES
1. Write pulse width = $2/F_{XTAL}$, that is, for 8MHz crystal, t_{pw} = 250nsec (typical)
2. Changes on DS1-5 are not stored in read mode ($\overline{ME}$ = 0, SC = 0, and WC = 0)
3. During the period when MCLK is high, measurement is made with $\overline{ME}$ = Low, SC = Low, and WC = High.

© IC MASTER 1984

2048-BIT BIPOLAR RAM (256×8)

8X350

N8X350N, N8X350F

DESCRIPTION

The 8X350 bipolar RAM is designed principally as a working storage element in an 8X305-based system. Internal circuitry is provided for direct use in 8X305 applications. When used with the 8X305 the RAM address and data busses are tied together and connected to the IV bus of the system.

The data inputs and outputs share a common I/O bus with 3-state outputs.

The 8X350 is available in commercial and military temperature ranges.

FEATURES

- **On-chip address latches**
- **3-state outputs**
- **Schottky clamped TTL**
- **Internal control logic for 8X305 system**
- **Directly interfaces with the 8X305 Bipolar MicroController with no external logic**

TRUTH TABLE

$\overline{ME}$	SC	WC	MCLK	BUSSED DATA/ADDRESS LINES
1	X	X	X	High Z data out
0	1	0	1	Address High Z
0	1	0	0	High Z data out
0	0	1	1	Data in
0	0	1	0	High Z data out
0	0	0	X	Data out
0	1	1	1	—
0	1	1	0	High Z data out

X = Don't care

PIN CONFIGURATION

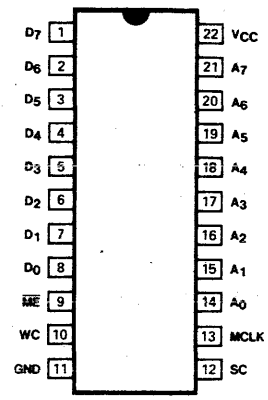

TOP VIEW

ABSOLUTE MAXIMUM RATINGS

PARAMETER		RATING	UNIT
V_{CC}	Supply voltage	+7	Vdc
V_{IN}	Input voltage	+5.5	Vdc
	Output voltage		Vdc
V_{OH}	High	+5.5	
V_O	Off-state	+5.5	
	Temperature range		°C
T_A	Operating		
	Commercial	0 to +75	
	Military	−55 to +125	
T_{STG}	Storage	−65 to +150	

BLOCK DIAGRAM

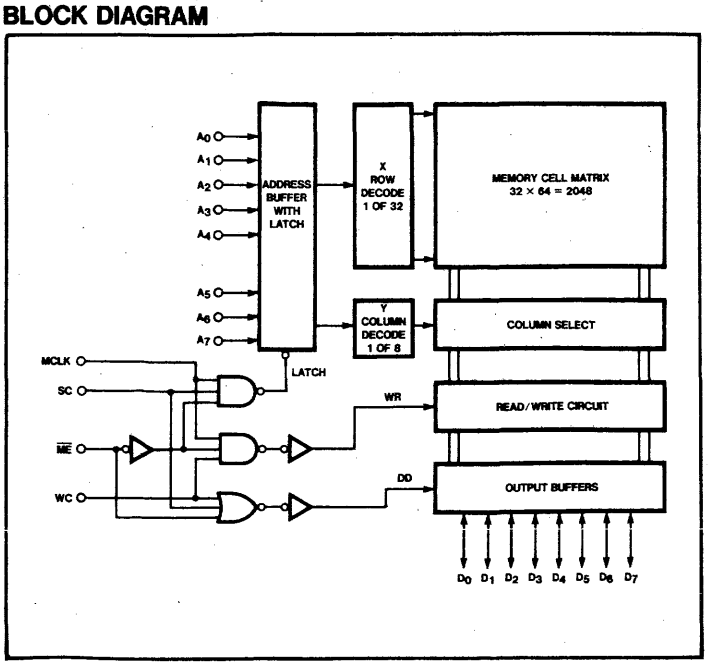

8X350 APPLICATIONS

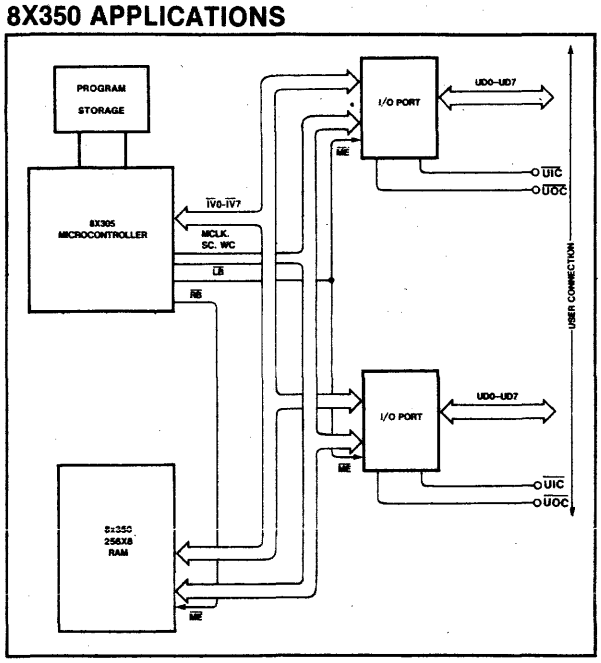

© IC MASTER 1984

DC ELECTRICAL CHARACTERISTICS[2]

N8X350: $0°C \leq T_A \leq +75°C$, $4.75V \leq V_{CC} \leq 5.25V$
S8X350: $-55°C \leq T_A \leq +125°C$, $4.75V \leq V_{CC} \leq 5.25V$

PARAMETER		TEST CONDITIONS	N8X350 Min	N8X350 Typ	N8X350 Max	S8X350 Min	S8X350 Typ	S8X350 Max	UNIT
	Input voltage								V
V_{IL}	Low[1]	V_{CC} = Min			.85			.80	
V_{IH}	High[1]	V_{CC} = Max	2.0			2.0			
V_{IC}	Clamp[1,3]	V_{CC} = Min, I_{IN} = −12mA			−1.2			−1.2	
	Output voltage	V_{CC} = Min							V
V_{OL}	Low[1,4]	I_{OL} = 9.6mA			0.5			.5	
V_{OH}	High[1,5]	I_{OH} = −2mA	2.4			2.4			
	Input current								μA
I_{IL}	Low	V_{IN} = 0.45V			−100			−150	
I_{IH}	High	V_{IN} = 5.5V			25			50	
	Output current								μA
$I_{O(OFF)}$	High Z state	$\overline{ME}$ = High, V_{OUT} = 5.5 V			40			60	μA
		$\overline{ME}$ = High, V_{OUT} = 0.5 V			−100			−100	
I_{OS}	Short circuit[3,6]	SC = WC, $\overline{ME}$ = Low, V_{OUT} = 0V, Stored High	−20		−70	−15		−85	mA
I_{CC}	V_{CC} supply current[7]	V_{CC} = Max			185			200	mA
	Capacitance	$\overline{ME}$ = High, V_{CC} = 5.0V							pF
C_{IN}	Input	V_{IN} = 2.0V		5			5		
C_{OUT}	Output	V_{OUT} = 2.0V		8			8		

AC ELECTRICAL CHARACTERISTICS[2,9]

N8X350: $0°C \leq T_A \leq +75°C$, $4.75V \leq V_{CC} \leq 5.25V$ $R_1 = 470\Omega$, $R_2 = 1k\Omega$, $C_L = 30pF$
S8X350: $-55°C \leq T_A \leq +125°C$, $4.75V \leq V_{CC} \leq 5.25V$

PARAMETER		TO	FROM	N8X350 Min	N8X350 Typ	N8X350 Max	S8X350 Min	S8X350 Typ	S8X350 Max	UNIT
	Enable time									ns
T_{E1}	Output	Data out	SC−			35			40	
T_{E2}	Output	Data out	$\overline{ME}$−			35			40	
	Disable time									ns
T_{D1}	Output	Data out	SC+			35			40	
T_{D2}	Output	Data out	$\overline{ME}$+			35			40	
	Pulse width									ns
T_W	Master clock[8]			40			50			
	Setup and hold time									ns
T_{SA}	Setup time	MCLK−	Address	30			40			
T_{HA}	Hold time	Address	MCLK−	5			10			
T_{SD}	Setup time	MCLK−	Data in	35			45			
T_{HD}	Hold time	Data in	MCLK−	5			10			
T_{S3}	Setup time	MCLK−	$\overline{ME}$−	40			50			
T_{H3}	Hold time	$\overline{ME}$+	MCLK−	5			5			
T_{S1}	Setup time	MCLK−	$\overline{ME}$−	30			40			
T_{H2}	Hold time	$\overline{ME}$−	MCLK−	5			5			
T_{S2}	Setup time	$\overline{ME}$−	SC−,WC−	0			5			
T_{H1}	Hold time	SC−	MCLK−	5			5			
T_{H4}	Hold time	WC−	MCLK−	5			5			

NOTES

1. All voltage values are with respect to network ground terminal.
2. The operating ambient temperature ranges are guaranteed with transverse air flow exceeding 400 linear feet per minute and a 2-minute warm-up.
   Typical thermal resistance values of the package at maximum temperature are:
   Θ_{JA} junction to ambient at 400fpm air flow - 50°C/watt
   Θ_{JA} junction to ambient - still air - 90°C/watt
   Θ_{JA} junction to case - 20°C/watt
3. Test each pin one at a time.
4. Measured with a logic low stored. Output sink current is supplied through a resistor to V_{CC}.
5. Measured with a logic high stored.
6. Duration of the short circuit should not exceed 1 second.
7. I_{CC} is measured with the write enable and memory enable inputs grounded, all other inputs at 4.5V and the output open.
8. Minimum required to guarantee a Write into the slowest bit.
9. Applied to the 8X300 based system with the data and address pins tied to the IV Bus.
10. SC + $\overline{ME}$ = 1 to avoid bus conflict.
11. WC + $\overline{ME}$ = 1 to avoid bus conflict.
12. The SC and WC outputs from the 8X300 are never at 1 simultaneously.

© IC MASTER 1984

BIPOLAR RAM (32x8) 8X353

PRODUCT DESCRIPTION

The 8X353 is a 32-byte RAM designed principally as a working storage element in 8X305-based systems. The 8X353 is ideal for applications requiring a relatively small amount of data storage and maximum I/O flexibility. Since the 8X353 takes up 32 of 256 locations on a controller bank, this device allows single-cycle, bank to bank data transfer and other implementations in which the user does not wish to dedicate an entire I/O bank to data storage. Contributing to the versatility of the 8X353 is a fast select feature which allows the chip to be selected externally of the $\overline{IV}$ bus. A block diagram and summary of operation is shown below.

FEATURES

- **32 bytes of storage**
- **Dedicated port address**
- **Fast select feature for use with extended microcode**
- **On chip address decoding**
- **Separate address input pins**
- **Single 5 volt power supply**
- **0.3 inch, slim line package**

BLOCK DIAGRAM

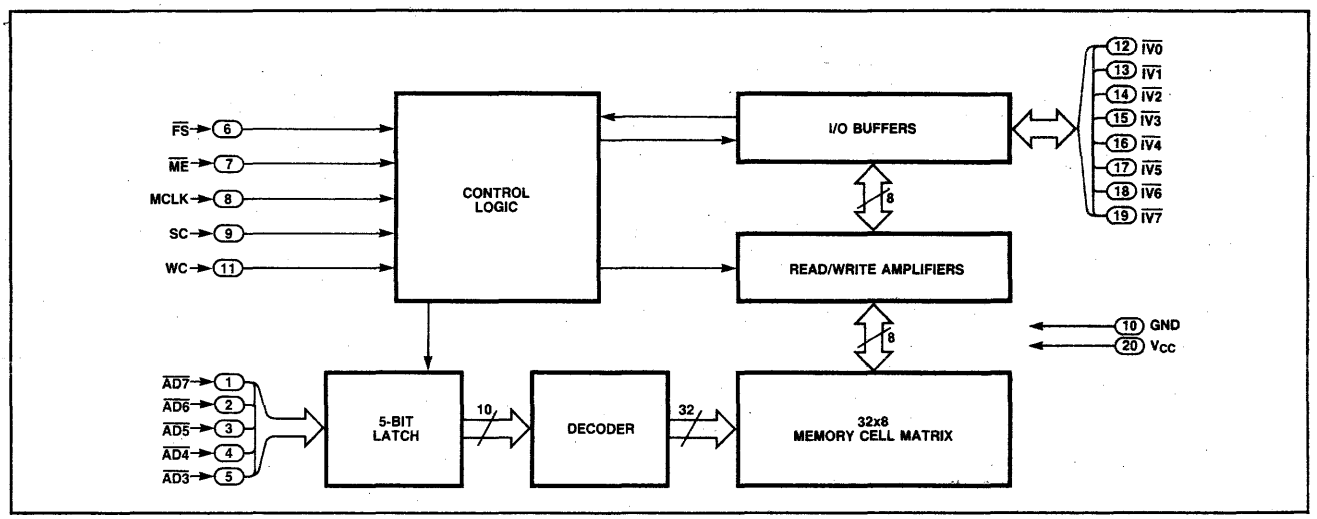

SUMMARY OF OPERATION

INPUT						RESULTING OUTPUT				
$\overline{ME}$	SC	WC	MCLK	$\overline{FS}$	SELECT LATCH	$\overline{IV}$ BUS	ADDRESS BUS	DATA	ADDRESS LATCH	SELECT LATCH
H	X	X	X	H	X	Ignore	Ignore	Keep	Keep	Keep
H	X	X	H	L	X	Ignore	Input	Keep	Update	Keep
H	X	X	L	L	X	Ignore	Ignore	Keep	Keep	Keep
L	L	L	L	L	X	Output	Ignore	Keep	Keep	Keep
L	L	L	L	H	L	Ignore	Ignore	Keep	Keep	Keep
L	L	L	L	H	H	Output	Ignore	Keep	Keep	Keep
L	X	L	H	L	X	Ignore	Input	Keep	Update	Keep
L	L	H	L	X	X	Ignore	Ignore	Keep	Keep	Keep
L	L	H	H	L	X	Input	Ignore	Update	Keep	Keep
L	L	H	H	H	L	Ignore	Ignore	Keep	Keep	Keep
L	L	H	H	H	H	Input	Ignore	Update	Keep	Keep
L	H	L	L	X	X	Ignore	Ignore	Keep	Keep	Keep
L	H	L	H	X	X	Input (Address)	Input	Keep	Update	Update*
X	H	H	X	X	X	Not Defined				

Notes:
* Depending on IV bus data
X = don't care

© IC MASTER 1984

LIFO STACK MEMORY (32x8) 8X355

PRODUCT DESCRIPTION

The 8X355 is a Last In/First Out stack memory designed to be compatible with 8X305-based systems. In addition to a 32-byte storage capacity, the 8X355 contains the necessary logic to allow cascaded operation.

The LIFO stack may be addressed using either conventional 8X305 techniques, i.e., $\overline{IV}$ bus select, or, in systems where extremely high performance is required, extended microcode can be implemented. A single enabling address is employed so that once enabled, a stack of 8X355s can accept an uninterrupted stream of data. By omitting the need for address select cycles prior to each data access, the LIFO stack delivers a much higher performance than conventional memories; this feature is particularly valuable for saving internal registers during interrupt servicing.

FEATURES

- **32 bytes of storage**
- **Cascadable LIFO operation**
- **Dedicated port address**
- **Fast select feature for use with extended microcode**
- **Three state TTL outputs**
- **Single 5 volt power supply**
- **0.3 inch, slim line package**

BLOCK DIAGRAM

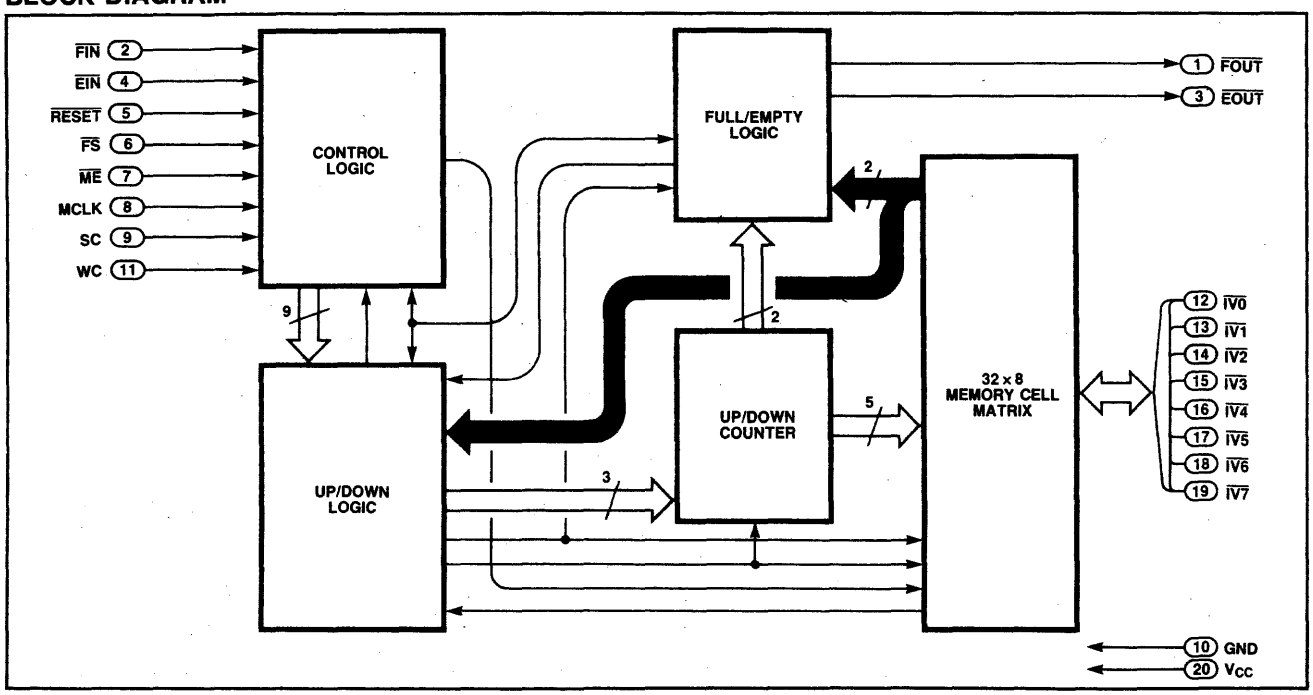

TYPICAL CASCADED CONFIGURATION

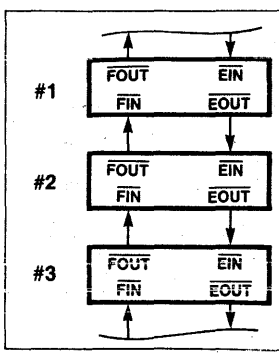

INPUT				RESULTING OUTPUT				COMMENTS
$\overline{EIN}$	$\overline{FIN}$	$\overline{EOUT}$	$\overline{FOUT}$	$\overline{EOUT}$	$\overline{FOUT}$	PUSH	POP	
X	X	L	L	Not possible				Empty and full status
L	L	L	H	Update	H	Yes	No	Top of data stack at top of #1
L	L	H	L	H	Update	No	Yes	Top of data stack at top of #2
L	L	H	H	Update	Update	Yes	Yes	Top of data stack within #2
X	H	X	X	L	H	No	No	Top of data stack below #2
H	L	X	H	Not defined				Top of data stack moves from bottom to top
H	L	H	L	H	L	No	No	Top of data stack above #2

Notes:
Status signals and Push/Pop operations reference stack chip #2
X = don't care

© IC MASTER 1984

MEMORY ADDRESS DIRECTOR 8X360

N8X360N, N8X360I, S8X360I

PRODUCT DESCRIPTION

The 8X360 Memory Address Director (MAD) is a high-performance member of the 8X300 Family that generates sequential memory addresses to facilitate the transfer of data to and from memory. The MAD provides a highly-efficient and cost-effective solution for DMA and other applications requiring large working-storage memories and high-speed data transfers. Once initialized with such information as starting address, ending address, byte count, address increment, address decrement, etc., the 8X360 performs all bookkeeping chores automatically and all address-management software is off-loaded from the processor. The 8X360 can be addressed by conventional means or by extended microcode; system status is available to the user via I/O pins.

FEATURES

- **Address control for working storage**
- **16-bit addressing capability**
- **Byte and word addressing support**
- **Automatic increment and decrement**
- **11 Address and word-count registers**
- **Reduces number of 8X305 instructions required**

BLOCK DIAGRAM OF 8X360

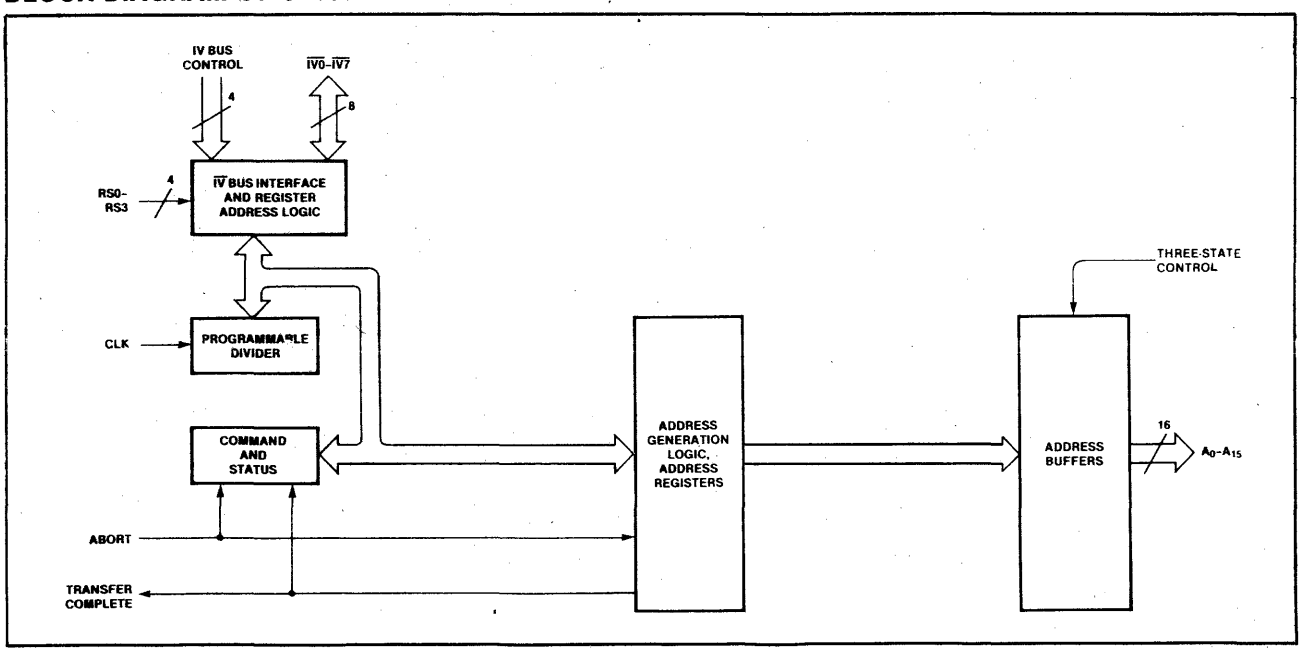

8X360 APPLICATIONS

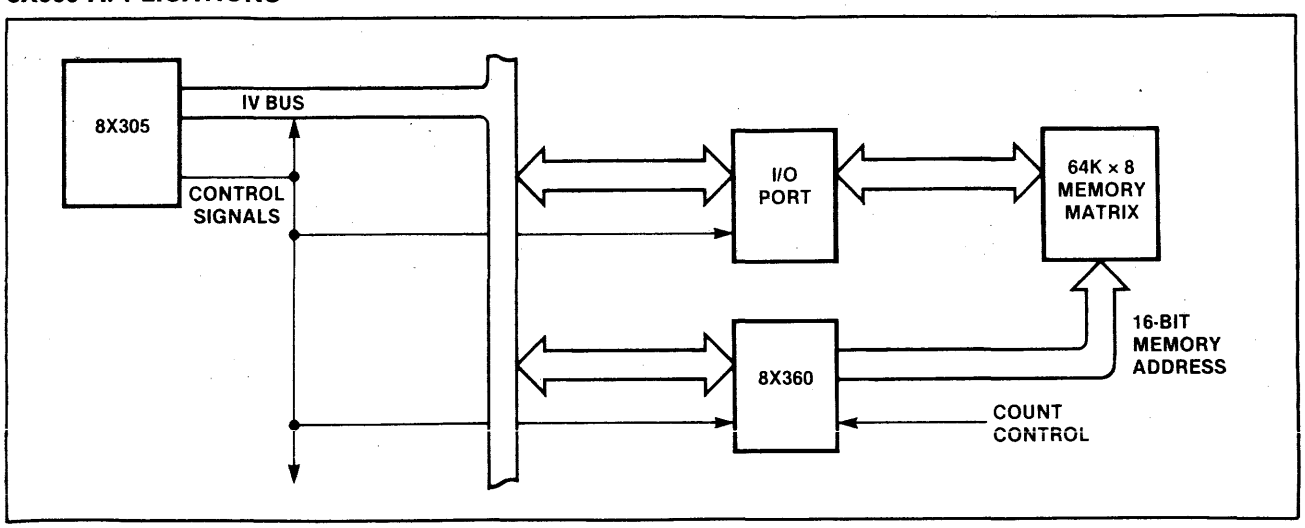

© IC MASTER 1984

8-BIT LATCHED BIDIRECTIONAL I/O PORT — 8X371

PRODUCT DESCRIPTION

The 8X371 I/O Port is a bidirectional device designed for use as an interface element in systems that use TTL-compatible busses. Typically, the 8X371 is used with the 8X305 MicroController and its associated Interface Vector ($\overline{IV}$) bus; however, it can also be used with the 8X300 MicroController or an equivalent microprocessor. The 8X371 is functionally the same and pin-for-pin compatible with the older 8T31/8X31 but features improved performance and increased drive current. As shown in the logic diagram of Figure 1, the 8X371 consists of eight identical data latches—bits 0 through 7. The latches are accessed from either of two 8-bit busses—the MicroController ($\overline{IV}$ bus) and the user data (UD bus). Separate controls are provided for each bus and both busses operate independently, except when both attempt to input data at the same time; in such situations, the user bus always has priority. A Master Enable ($\overline{ME}$) input is available for additional control over the $\overline{IV}$ bus. The data latches are transparent, in that, while either bus is enabled for input, all input-data transitions are propagated to the other bus, if enabled for output.

FEATURES

- **Two bidirectional 8-bit busses**
- **Independent bus operation (user-bus priority for data entry)**
- **User data input synchronous with respect to MCLK**
- **Three-state TTL outputs with high-drive capabilities**
- **Power-up to predetermined logic state**
- **Directly compatible with 8X305 (or 8X300) MicroControllers**
- **Single +5V supply**
- **0.4 inch 24-pin DIP**

8X371 PACKAGE and PIN DESIGNATIONS

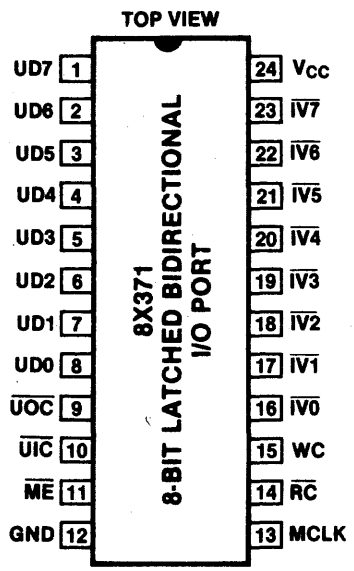

PIN. NO.	IDENTIFIER	FUNCTION
1-8	UD7-UD0	Three-state, bidirectional User Data (UD) bus; UD0 and corresponds to $\overline{IV0}$.
9	$\overline{UOC}$	User Output Control—active low input to enable data output to UD0-UD7.
10	$\overline{UIC}$	User Input Control—active low input to enable data input from UD0-UD7.
11	$\overline{ME}$	Master Enable—active low input to enable the $\overline{IV}$ bus for data input, or data output; UD-bus operations are unaffected.
12	GND	Ground.
13	MCLK	Master Clock—active high input (from MicroController) used to strobe data into data latches from the $\overline{IV}$ and UD buses.
14	$\overline{RC}$	Read Control—active low input to enable data output to $\overline{IV0}$-$\overline{IV7}$.
15	WC	Write Command—active high input (from MicroController) to enable the writing of data into the data latches from the $\overline{IV}$ bus (provided $\overline{UIC}$ is not low).
16-23	$\overline{IV0}$-$\overline{IV7}$	Interface Vector (Input/Output Bus)—three-state, bidirectional, MicroController data bus; $\overline{IV0}$ corresponds to UD0.
24	Vcc	+5V power supply.

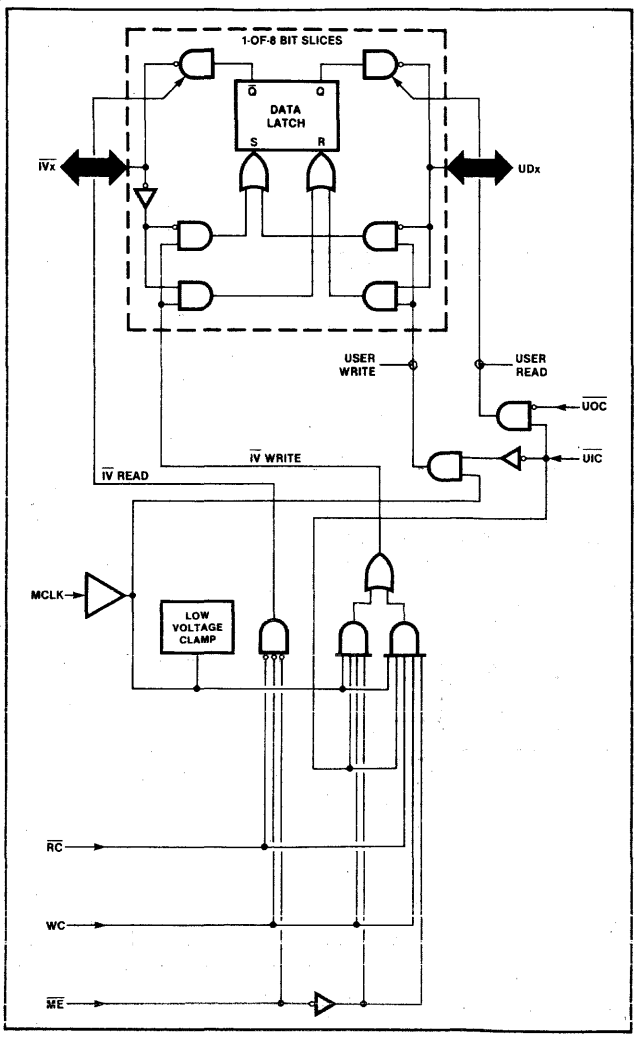

Figure 1. Logic Diagram

© IC MASTER 1984

8-BIT LATCHED BIDIRECTIONAL I/O PORT

DC ELECTRICAL CHARACTERISTICS

COMMERCIAL: $4.75V \leq V_{CC} \leq 5.25V$, $0°C \leq T_A \leq 70°C$
MILITARY: $4.5V \leq V_{CC} \leq 5.5V$, $-55°C \leq T_C \leq 125°C$

ABSOLUTE MAXIMUM RATINGS

PARAMETER		RATING	UNIT
V_{CC}	Power supply voltage	+7	Vdc
V_{IN}	Input voltage	+5.5	Vdc
T_{STG}	Storage temperature range	-65 to +150	°C

PARAMETER		TEST CONDITIONS	LIMITS (COMMERCIAL)			LIMITS (MILITARY)			UNIT
			Min	Typ	Max	Min	Typ	Max	
V_{CC}	Supply Voltage		4.75	5	5.25	4.5	5	5.5	V
V_{IH}	High Level Input Voltage		2.0			2.0			V
V_{IL}	Low Level Input Voltage				0.8			0.8	V
V_{CL}	Input Clamp Voltage	V_{CC}=Min; I_I=-10mA			-1.5			-1.5	V
I_{IH}	High Level Input Current[1]	V_{CC}=Max; V_{IH}=2.7V		5	100		5	100	μA
I_{IL}	Low Level Input Current[1]	V_{CC}=Max; V_{IL}<0.5V		-350	-550		-350	-550	μA
V_{OL}	Low Level Output Voltage $\overline{IV}$ Bus ($\overline{IV0}$-$\overline{IV7}$)	V_{CC}=Min; I_{OL}= 16mA			0.55			0.55	V
	User Bus (UD4-UD7)	V_{CC}=Min; I_{OL}=24mA			0.55			0.55	V
V_{OH}	High Level Output Voltage	V_{CC}=Min; I_{OH}=-3.2mA	2.4			2.4			V
I_{OS}	Short Circuit Output Current[3] $\overline{IV}$ Bus ($\overline{IV0}$-$\overline{IV7}$)	V_{CC}=Max	-20			-20			mA
	UD Bus (UD4-UD7)	V_{CC}=Max	-10			-10			mA
I_{CC}	Supply Current	V_{CC}=Max; $\overline{ME}$=$\overline{UOC}$=V_{CC}		90	150		90	150	mA

Notes:
1. The input current includes the Three-state leakage current of the output driver on the data lines.
2. Only one output may be shorted at a time.

AC ELECTRICAL CHARACTERISTICS

COMMERCIAL: $4.75V \leq V_{cc} \leq 5.25V$, $0°C \leq T_A \leq 70°C$
MILITARY: $4.5V \leq V_{cc} \leq 5.5V$, $-55°C \leq T_C \leq 125°C$

LOADING: See TEST LOADING CIRCUITS

PARAMETER		REFERENCES FROM	REFERENCES TO	TEST CONDITIONS	LIMITS (COMMERCIAL)			LIMITS (MILITARY)			UNIT
					Min	Typ	Max	Min	Typ	Max	
Pulse Widths:											
t_{W1}	Clock High	↑MCLK	↓MCLK		35			35			ns
t_{W2}	User Input Control	↓$\overline{UIC}$	↑$\overline{UIC}$	MCLK=High	35			35			ns
Propagation Delays:											
t_{PD1}	UD Propagation Delay	UD	$\overline{IV}$	MCLK=High $\overline{RC}$=WC=$\overline{ME}$=$\overline{UIC}$=Low			30			30	ns
t_{PD2}	UD Clock Delay	↑MCLK	$\overline{IV}$	UD=Stable; $\overline{RC}$=WC=$\overline{ME}$=$\overline{UIC}$=Low			50			50	ns
t_{PD3}	UD Input Delay	↓$\overline{UIC}$	$\overline{IV}$	UD=Stable; MCLK=High; $\overline{RC}$=WC=$\overline{ME}$=Low			50			50	ns
t_{PD4}	$\overline{IV}$ Data Propagation Delay	$\overline{IV}$	UD	MCLK=WC=$\overline{UIC}$=High; $\overline{ME}$=$\overline{UOC}$=$\overline{RC}$=Low			45			45	ns
t_{PD5}	$\overline{IV}$ Data Clock Delay	↑MCLK	UD	WC=$\overline{UIC}$=High; $\overline{IV}$=Stable, $\overline{ME}$=$\overline{UOC}$=$\overline{RC}$=Low			55			55	ns
Output Enable Timing:											
t_{OE1}	UD Output Enable	↓UOC	UD	$\overline{UIC}$=High			30			30	ns
t_{OE2}	UD Input Recovery	↑$\overline{UIC}$	UD	$\overline{UOC}$=Low			30			30	ns
t_{OE3}	$\overline{IV}$ Data Master Enable	↓$\overline{ME}$	$\overline{IV}$	WC=$\overline{RC}$=Low			22			25	ns
t_{OE4}	$\overline{IV}$ Data Read Enable	↓$\overline{RC}$	$\overline{IV}$	WC=$\overline{ME}$=Low			25			25	ns

© IC MASTER 1984

AC ELECTRICAL CHARACTERISTICS (Cont'd)

PARAMETERS		REFERENCES FROM	REFERENCES TO	TEST CONDITIONS	LIMITS (COMMERCIAL) Min	Typ	Max	LIMITS (MILITARY) Min	Typ	Max	UNIT
t_{OE5}	$\overline{IV}$ Data Write Recovery	↓WC	$\overline{IV}$	$\overline{RC}$ = $\overline{ME}$ = Low			25			25	ns
Output Disable Timing:											
t_{OD1}	UD Output Disable	↑$\overline{UOC}$	UD	$\overline{UIC}$ = High			25			25	ns
t_{OD2}	UD Input Override	↓$\overline{UIC}$	UD	$\overline{UOC}$ = Low			30			30	ns
t_{OD3}[1]	IV Data Master Disable	↑$\overline{ME}$	$\overline{IV}$	WC = $\overline{RC}$ = Low			20			20	ns
t_{OD4}[1]	IV Data Read Disable	↑$\overline{RC}$	$\overline{IV}$	WC = $\overline{ME}$ = Low			20			20	ns
t_{OD5}[1]	IV Data Write Override	↑WC	$\overline{IV}$	$\overline{RC}$ = $\overline{ME}$ = Low			20			20	ns
Setupt Times:											
t_{S1}	UD Clock Setup Time	UD	↓MCLK	$\overline{UIC}$ = Low	15			15			ns
t_{S2}	UD Setup Time	UD	↑UIC	MCLK = High	15			15			ns
t_{S3}	User Input Control Setup Time	↓$\overline{UIC}$	↓MCLK		25			25			ns
t_{S4}	$\overline{IV}$ Data Setup Time	$\overline{IV}$	↓MCLK	WC = $\overline{UIC}$ = High; $\overline{ME}$ = Low	35			35			ns
t_{S5}[2]	$\overline{IV}$ Master Enable Setup Time	↓$\overline{ME}$	↓MCLK	WC = $\overline{UIC}$ = High	30			30			ns
t_{S6}	$\overline{IV}$ Write Control Setup Time	↑WC	↓MCLK	$\overline{ME}$ = Low; $\overline{UIC}$ = High	30			30			ns
Hold Times:											
t_{H1}	UD Clock Hold Time	↓MCLK	UD	$\overline{UIC}$ = Low	15			15			ns
t_{H2}	UD Control Hold Time	↑$\overline{UIC}$	UD	MCLK = High	15			15			ns
t_{H3}	User Input Control Hold Time	↓MCLK	↑$\overline{UIC}$		0			0			ns
t_{H4}	$\overline{IV}$ Data Hold Time	↓MCLK	$\overline{IV}$	WC = $\overline{UIC}$ = High; $\overline{ME}$ = Low	5			5			ns
t_{H5}[2]	$\overline{IV}$ Master Enable Hold Time	↓MCLK	↑$\overline{ME}$	WC = $\overline{UIC}$ = High	0			0			ns
t_{H6}	$\overline{IV}$ Write Control Hold Time	↓MCLK	↓WC	$\overline{ME}$ = Low; $\overline{UIC}$ = High	0			0			ns

Notes:
1. These parameters are measured with a capacitive loading of 50 pF and represent the output driver turn-off time.
2. If $\overline{ME}$ is to be high (inactive), it must be setup before the rising edge and held after the falling edge of MCLK to avoid unintended writing into or selection of the I/O port.

© IC MASTER 1984

ADDRESSABLE/BIDIRECTIONAL I/O PORTS 8X372/8X376

PRODUCT IDENTITY

8X372—Synchronous, three-state, bidirectional I/O port with programmed address.

8X376—Asynchronous, three-state, bidirectional I/O port with programmed address.

PRODUCT DESCRIPTION

Each of these I/O ports is an addressable device designed for use as a bidirectional interface element in systems that use TTL-compatible busses. Typically, these I/O ports are used with the 8X305 MicroController and its associated Interface Vector ($\overline{IV}$) bus; however, either port can also be used with the 8X300 MicroController or an equivalent microprocessor. The 8X372 and 8X376 are funtionally the same and pin-for-pin compatible with their respective counterparts, the 8T32/8X32 and 8T36/8X36; however, the new parts feature better performance, increased drive current, and improved programming procedures.

As shown in the logic diagram of Figure 1, each I/O port consists of eight identical data latches—bits 0 through 7. These latches are accessed through either of two 8-bit busses—one connecting to the MicroController ($\overline{IV}$ bus) and the other to the user system (UD bus). Separate controls are provided for each bus and both busses operate independently, except when both attempt to input data at the same time. In such situations, the user bus always has priority. The data latches are transparent, in that, while either bus is enabled for input, all transitions in input data are propagated to the other bus, if enabled for output.

Both the 8X372 and 8X376 are available with preprogrammed addresses (0_{10} through 255_{10}); either device can be field-programmed over the same address range. Input/output operations can begin once the I/O port is selected and appropriate control signals are generated. Port selection is implemented by putting the I/O port address (0_{10}-255_{10}) on the $\overline{IV}$ bus; once selected, the I/O port remains selected until a different "port address" is put on the bus. Thus, software overhead is minimized. Data is accessible on the UD bus at all times. A Master Enable ($\overline{ME}$) input, which is typically connected to the Left Bank ($\overline{LB}$) or Right Bank ($\overline{RB}$) output of the MicroController, provides the capability of organizing the $\overline{IV}$ bus into two separate and independent banks of I/O devices.

FEATURES

- **Two bidirectional 8-bit busses**
- **Independent bus operation (user-bus priority for data entry)**
- **User data input synchronous (8X372) or asynchronous (8X376) with respect to MCLK**
- **Programmed MicroController port address**
- **Three-state TTL outputs with high-drive capabilities**
- **Power-up to predetermined logic state**
- **Directly compatible with 8X305 or 8X300 MicroControllers**
- **Single +5V supply**
- **0.4 inch 24-pin DIP**

8X372/8X376 PACKAGE and PIN DESIGNATIONS

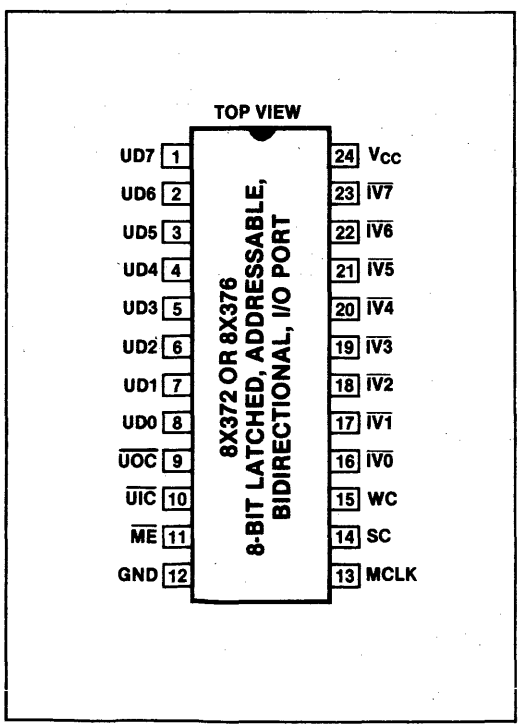

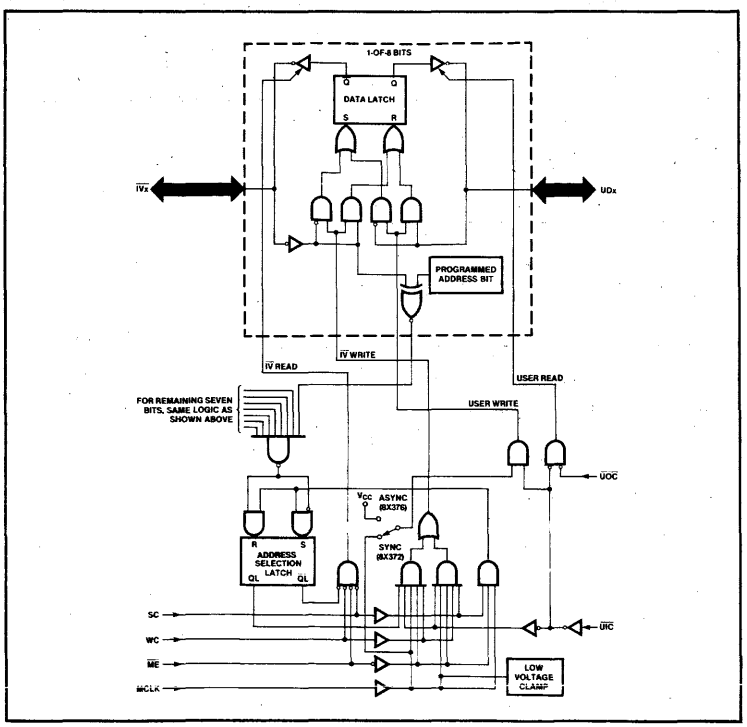

Figure 1. Logic Diagram for 8X372/8X376 I/O Ports

© IC MASTER 1984

DC ELECTRICAL CHARACTERISTICS

COMMERCIAL: 4.75V ≤ V_{CC} ≤ 5.25V, 0°C ≤ T_A ≤ 70°C
MILITARY: 4.5V ≤ V_{CC} ≤ 5.5V, -55°C ≤ T_C ≤ 125°C

ABSOLUTE MAXIMUM RATINGS

PARAMETER		RATING	UNIT
V_{CC}	Power supply voltage[3]	+7	Vdc
V_{IN}	Input voltage[3]	+5.5	Vdc
T_{STG}	Storage temperature range	-65 to +150	°C

PARAMETER		TEST CONDITIONS	LIMITS (COMMERCIAL)			LIMITS (MILITARY)			UNIT
			Min	Typ	Max	Min	Typ	Max	
V_{CC}	Supply Voltage		4.75	5	5.25	4.5	5	5.5	V
V_{IH}	High Level Input Voltage		2.0			2.0			V
V_{IL}	Low Level Input Voltage				0.8			0.8	V
V_{CL}	Input Clamp Voltage	V_{CC}=Min; I_I=-10mA			-1.5			-1.5	V
I_{IH}	High Level Input Current[1]	V_{CC}=Max; V_{IH}= 2.7V		5.0	100		5.0	100	μA
I_{IL}	Low Level Input Current[1]	V_{CC}=Max; V_{IL}=0.5V		-350	-550		-350	-550	μA
V_{OL}	Low Level Output Voltage $\overline{IV}$ Bus ($\overline{IV0}$-$\overline{IV7}$)	V_{CC}=Min; I_{OL}=16mA			0.55		0.55	V	
	User Bus (UD0-UD7)	V_{CC}=Min; I_{OL}=24mA			0.55			0.55	V
V_{OH}	High Level Output Voltage	V_{CC}=Min; I_{OH}=-3.2mA	2.4			2.4			V
I_{OS}	Short Circuit Output Current[2] $\overline{IV}$ Bus ($\overline{IV0}$-$\overline{IV7}$)	V_{CC}=Max	-20			-20			mA
	UD Bus (UD0-UD7)	V_{CC}=Max	-10			-10			mA
I_{CC}	Supply Current	V_{CC}=Max; $\overline{ME}$=$\overline{UOC}$=V_{CC}		90	150		90	150	mA

Notes:
1. The input current includes the Three-state leakage current of the output driver on the data lines.
2. Only one output may be shorted at a time.
3. These limits do not apply during address programming.

AC ELECTRICAL CHARACTERISTICS

COMMERCIAL: 4.75V ≤ V_{CC} ≤ 5.25V, 0°C ≤ T_A ≤ 70°C
MILITARY: 4.5V ≤ V_{CC} ≤ 5.5V, -55°C = T_C ≤ 125°C
LOADING: See TEST LOADING CIRCUITS

PARAMETER		REFERENCES[1]		TEST CONDITIONS	LIMITS (COMMERCIAL)			LIMITS (MILITARY)			UNIT
		FROM	TO		Min	Typ	Max	Min	Typ	Max	
Pulse Widths:											
t_{W1}	Clock High	↑MCLK	↓MCLK		35			35			ns
t_{W2}	User Input Control	↓$\overline{UIC}$	↑$\overline{UIC}$	MCLK=High	35			35			ns
Propagation Delays:											
t_{PD1}	UD Propagation Delay	UD	$\overline{IV}$	MCLK=High SC=WC=$\overline{ME}$=$\overline{UIC}$=Low			30			30	ns
t_{PD2}	UD Clock Delay (8X732 only)	↑MCLK	$\overline{IV}$	UD=Stable; SC=WC=$\overline{ME}$=$\overline{UIC}$=Low			50			50	ns
t_{PD3}	UD Input Delay	↓$\overline{UIC}$	$\overline{IV}$	UD=Stable; MCLK=High; SC=WC=$\overline{ME}$=Low			50			50	ns
t_{PD4}	$\overline{IV}$ Data Propagation Delay	$\overline{IV}$	UD	MCLK=WC=$\overline{UIC}$=High; $\overline{ME}$=$\overline{UOC}$=SC=Low			45			45	ns
t_{PD5}	$\overline{IV}$ Data Clock Delay	↑MCLK	UD	WC=$\overline{UIC}$=High; $\overline{IV}$=Stable, $\overline{ME}$=$\overline{UOC}$=SC=Low			55			55	ns
Output Enable Timing:											
t_{OE1}	UD Output Enable	↓$\overline{UOC}$	UD	$\overline{UIC}$=High			30			30	ns
t_{OE2}	UD Input Recovery	↑$\overline{UIC}$	UD	$\overline{UOC}$=Low			30			30	ns
t_{OE3}	$\overline{IV}$ Data Master Enable	↓$\overline{ME}$	$\overline{IV}$	WC=SC=Low			22			25	ns
t_{OE5}	$\overline{IV}$ Data Write Recovery	↓WC	$\overline{IV}$	SC=$\overline{ME}$=Low			25			25	ns
t_{OE6}	$\overline{IV}$ Data Select Recovery	↓SC	$\overline{IV}$	SC=$\overline{ME}$=Low			25			25	ns

© IC MASTER 1984

AC ELECTRICAL CHARACTERISTICS (Cont'd)

PARAMETERS	REFERENCES FROM	REFERENCES TO	TEST CONDITIONS	LIMITS (COMMERCIAL) Min	Typ	Max	LIMITS (MILITARY) Min	Typ	Max	UNIT
Output Disable Timing:										
t_{OD1} UD Output Disable	↑$\overline{UOC}$	UD	$\overline{UIC}$ = High			25			25	ns
t_{OD2} UD Input Override	↓$\overline{UIC}$	UD	$\overline{UOC}$ = Low			30			30	ns
t_{OD3}[2] $\overline{IV}$ Data Master Disable	↑$\overline{ME}$	$\overline{IV}$	WC = SC = Low			20			20	ns
t_{OD4}[2] $\overline{IV}$ Data Write Override	↑WC	$\overline{IV}$	SC = $\overline{ME}$ = Low			20			20	ns
t_{OD5}[2] $\overline{IV}$ Data Write Override	↑SC	$\overline{IV}$	WC = $\overline{ME}$ = Low			20			20	ns
Setup Times:										
t_{S1} UD Clock Setup Time (8X8372 only)	UD	↓MCLK	$\overline{UIC}$ = Low	15			15			ns
t_{S2} UD Control Setup Time	UD	↑$\overline{UIC}$	MCLK = High	15			15			ns
t_{S3} User Input Control Setup Time (8X372 only)	↓$\overline{UIC}$	↓MCLK		25			25			ns
t_{S4} $\overline{IV}$ Data Setup Time	$\overline{IV}$	↓MCLK	WC = High or SC = High; $\overline{ME}$ = Low; $\overline{UIC}$ = High	35			35			ns
t_{S5} $\overline{IV}$ Master Enable Setup Time	↓ME	↓MCLK	WC = High or SC = High; $\overline{UIC}$ = High	30			30			ns
t_{S6} $\overline{IV}$ Write Control Setup Time	↑WC	↓MCLK	SC = $\overline{ME}$ = Low; $\overline{UIC}$ = High	30			30			ns
t_{S7} $\overline{IV}$ Select Control Setup Time	↑SC	↓MCLK	WC = $\overline{ME}$ = Low	30			30			ns
Hold Times:										
t_{H1} UD Clock Hold Time (8X372 only)	↓MCLK	UD	$\overline{UIC}$ = Low	15			15			ns
t_{H2} UD Control Hold Time	↑$\overline{UIC}$	UD	MCLK = High	15			15			ns
t_{H3} User Input Control Hold Time (8X372 only)	↓MCLK	↑$\overline{UIC}$		0			0			ns
t_{H4} $\overline{IV}$ Data Hold Time	↓MCLK	$\overline{IV}$	WC = High or SC = High; $\overline{ME}$ = Low, $\overline{UIC}$ = High	5			5			ns
t_{H5}[3] $\overline{IV}$ Master Enable Hold Time	↓MCLK	↑$\overline{ME}$	WC = High or SC = High; $\overline{UIC}$ = High	0			0			ns
t_{H6} $\overline{IV}$ Write Control Hold Time	↓MCLK	↓WC	SC = $\overline{ME}$ = Low; $\overline{UIC}$ = High	0			0			ns
t_{H7} $\overline{IV}$ Select Control Hold Time	↓MCLK	↓SC	WC = $\overline{ME}$ = Low	0			0			ns

Notes:
1. All measurements to the IV bus assumes the address selection latch is set.
2. These parameters are measured with a capacitive loading of 50 pF and represent the output driver turn-off time.
3. If ME is to be high (inactive), it must be setup before the rising edge and held after the falling edge of MCLK to avoid unintended writing into or selection of the I/O port.

© IC MASTER 1984

ADDRESSABLE/BIDIRECTIONAL I/O PORT WITH PARITY 8X374

FEATURES

- **Two bidirectional 8-bit busses**
- **Independent bus operation (user bus priority for data entry)**
- **Parity generate/check logic with:**
  Odd/Even parity select
  Strobed error flag output
- **Synchronous data input**
- **Programmable MicroController port address**
- **Three-state TTL outputs (for all except parity error flag)**
- **High drive capabilities**
- **Power-up to predetermined state**
- **Directly compatible with 8X305 MicroController**
- **Single +5V supply**
- **0.6 inch, 28-pin DIP**

PRODUCT DESCRIPTION

The Signetics 8X374 is an addressable 8-bit I/O Port that features on-chip parity generate/check logic. The 8X374 port is designed for applications that require an 8-bit bidirectional interface element with parity-generate and parity-check capabilities. Typically, the 8X374 is used with the 8X305 MicroController and its associated Interface Vector (IV) bus.

As shown in the logic diagram of Figure 1, the 8X374 consists of eight identical latches, bits 0 through 7. These latches are accessed through either of two 8-bit busses, one connecting to the MicroController (IV bus) and the other to the user system (UD bus). Separate controls are provided for each bus and both busses operate independently, except when both attempt to input data at the same time. In such situations, the user bus always has priority. The data latches are transparent, in that, while either bus is enabled for input, all transitions in input data are propagated to the other bus, if enabled for output. The data latch in Figure 1 is common to both busses, that is, data traveling from the IV bus to the UD bus, or vice-versa, is latched and applied to the parity generate/check logic. The parity-bit latch is interfaced to the UD bus and latches the parity bit. The user can implement the parity features of the chip by simply selecting odd or even parity via the Parity SeLect (PSL) input pin. When data is output to the UD bus, a parity bit is generated and appended to each byte of data; for incoming data, parity is checked and the result is transmitted to an error-flag latch. The status of the latch (0 = no parity error/1 = parity error) is reflected by the Error Flag (EF) output pin. Operation of the error-flag latch is controlled by the Error Flag Hold (EFH) signal. With EFH low, the operation is transparent; when high the contents of the latch are frozen to avoid false errors while data latches are changing.

PIN CONFIGURATION

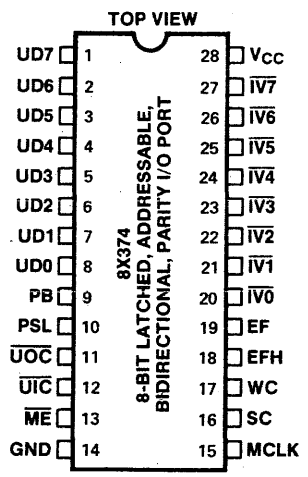

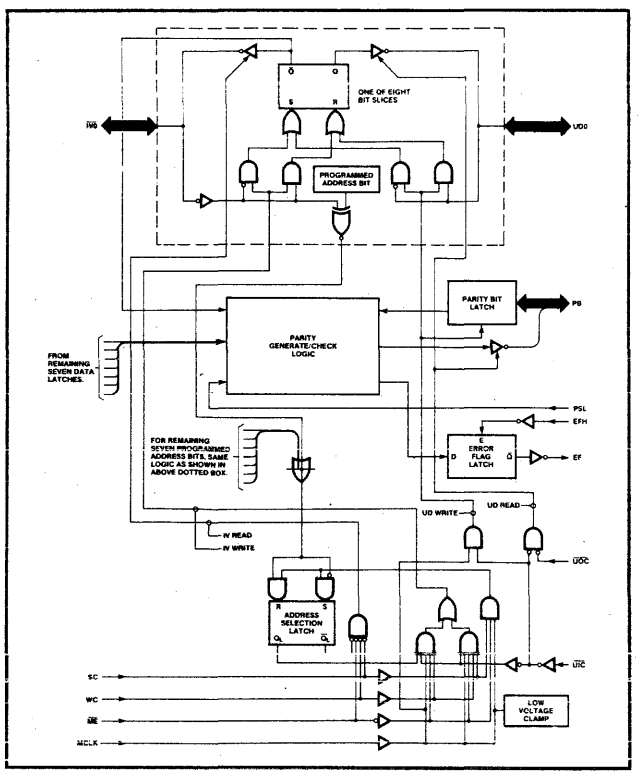

Figure 1. Logic Diagram for 8X374 I/O Port

© IC MASTER 1984

ADDRESSABLE/BIDIRECTIONAL I/O PORT WITH PARITY 8X374

The 8X374 is available with either preprogrammed addresses (0_{10} to 255_{10}) or unprogrammed; the device can be field-programmed over the same address range as the preprogrammed port. Input/Output operations to the Micro-Controller bus can begin once the 8X374 enabling address has been selected and appropriate control signals from the IV bus are generated. Port selection is implemented by putting the 8X374 address (0_{10} to 255_{10}) on the IV bus. Once selected, the I/O port remains selected until a different port address is put on the bus.

With appropriate control inputs, data is accessible on the UD bus at all times. A Master Enable (ME) input, which is typically connected to the Left Bank (LB) or Right Bank (RB) output of the MicroController, provides the capability of organizing the IV bus into two separate and independent banks of I/O devices.

ABSOLUTE MAXIMUM RATINGS

Parameter		Rating	Unit
V_{CC}	Power supply voltage[3]	+7	V DC
V_{IN}	Input voltage[3]	+5.5	V DC
T_{STG}	Storage temperature range	-65 to +150	°C

DC ELECTRICAL CHARACTERISTICS

COMMERCIAL: V_{CC} = 5 V (±5%); $T_A \geq 0°C$
$T_A \leq 70°C$
MILITARY: V_{CC} = 5 V (±10%); $T_A \geq -55°C$
$T_C \leq 125°C$

Parameter		Test Conditions	Limits (Commercial)			Limits (Military)			Unit
			Min	Typ	Max	Min	Typ	Max	
V_{CC}	Supply Voltage		4.75	5	5.25	4.5	5	5.5	V
V_{IH}	High Level Input Voltage		2.0			2.0			V
V_{IL}	Low Level Input Voltage				0.8			0.8	V
V_{CL}	Input Clamp Voltage	V_{CC} = Min; I_I = -10 mA			-1.5			-1.5	V
I_{IH}	High Level Input Current[1]	V_{CC} = Max; V_{IH} = 2.7 V		5.0	100		5.0	250	μA
I_{IL}	Low Level Input Current[1]	V_{CC} = Max; V_{IL} = 0.5 V		-350	-550		-350	-550	μA
V_{OL}	Low Level Output Voltage $\overline{IV}$ Bus ($\overline{IV0}$-$\overline{IV7}$)	V_{CC} = Min; I_{OL} = 16 mA			0.55			0.55	V
	User Bus (UD0-UD7) and PB	V_{CC} = Min; I_{OL} = 24 mA			0.55			0.55	V
	EF	V_{CC} = Min; I_{OL} = 8 mA			0.55			0.55	V
V_{OH}	High Level Output Voltage EF	V_{CC} = Min; I_{OH} = -1 mA	2.4			2.4			V
	Others	V_{CC} = Min; I_{OH} = -3.2 mA	2.4			2.4			V
I_{OS}	Short Circuit Output Current[2] $\overline{IV}$ Bus ($\overline{IV0}$-$\overline{IV7}$)	V_{CC} = Max	-20			-20			mA
	UD Bus (UD0-UD7)	V_{CC} = Max	-10			-10			mA
I_{CC}	Supply Current	V_{CC} = Max; $\overline{ME}$ = $\overline{UOC}$ = V_{CC}		90	150		90	160	mA

Notes:
1. The input current includes the high-Z leakage current of the output drivers ($\overline{IV0}$-$\overline{IV7}$, UD0-UD7) on the data lines.
2. Only one output may be shorted at a time for testing purposes.
3. These limits do not apply during address programming.

© IC MASTER 1984

AC ELECTRICAL CHARACTERISTICS

COMMERCIAL: V_{CC} = 5 V (±5%); $T_A \geq 0°C$, $T_A \leq 70°C$
MILITARY: V_{CC} = 5 V (±10%); $T_A \geq -55°C$, $T_C \leq 125°C$
LOADING: See TEST LOADING CIRCUITS

Parameter	References From	References To	Test Conditions[1]	Limits (Commercial) Min	Limits (Commercial) Typ	Limits (Commercial) Max	Limits (Military) Min	Limits (Military) Typ	Limits (Military) Max	Unit
Pulse Widths:										
t_{W1} Clock High	↑MCLK	↓MCLK		35			35			ns
t_{W2} User Input Control	↓$\overline{UIC}$	↑$\overline{UIC}$	MCLK = High	35			35			ns
Propagation Delays:										
t_{PD1} UD Propagation Delay	UD	$\overline{IV}$	MCLK = High SC = WC = $\overline{ME}$ = $\overline{UIC}$ = Low			40			40	ns
t_{PD2} UD Clock Delay	↑MCLK	$\overline{IV}$	UD = Stable; SC = WC = $\overline{ME}$ = $\overline{UIC}$ = Low			50			50	ns
t_{PD3} UD Input Delay	↓$\overline{UIC}$	$\overline{IV}$	UD = Stable; MCLK = High; SC = WC = $\overline{ME}$ = Low			50			50	ns
t_{PD4} $\overline{IV}$ Data Propagation Delay	$\overline{IV}$	UD	MCLK = WC = $\overline{UIC}$ = High; $\overline{ME}$ = $\overline{UOC}$ = SC = Low			45			45	ns
t_{PD5} $\overline{IV}$ Data Clock Delay	↑MCLK	UD	WC = $\overline{UIC}$ = High; $\overline{IV}$ = Stable, $\overline{ME}$ = $\overline{UOC}$ = SC = Low			55			55	ns
t_{PD6} Error Flag Propagation Delay	UD, PB	EF	MCLK = High; $\overline{UIC}$ = EFH = Low			55			55	ns
t_{PD7} Parity Generate Propagation Delay	$\overline{IV}$	PB	MCLK = WC = $\overline{UIC}$ = High; $\overline{UOC}$ = $\overline{ME}$ = Low			55			55	ns
t_{PD8} Error Flag Strobe Delay[3]	↓EFH	EF				20			20	ns
Output Enable Timing:										
t_{OE1} UD Output Enable	↓$\overline{UOC}$	UD, PB	$\overline{UIC}$ = High			30			30	ns
t_{OE2} UD Input Recovery	↑$\overline{UIC}$	UD, PB	$\overline{UOC}$ = Low			30			30	ns
t_{OE3} $\overline{IV}$ Data Master Enable	↓$\overline{ME}$	$\overline{IV}$	WC = SC = Low			22			25	ns
t_{OE4} $\overline{IV}$ Data Write Recovery	↓WC	$\overline{IV}$	SC = $\overline{ME}$ = Low			25			25	ns
t_{OE5} $\overline{IV}$ Data Select Recovery	↓SC	$\overline{IV}$	SC = $\overline{ME}$ = Low			25			25	ns

© IC MASTER 1984

AC ELECTRICAL CHARACTERISTICS (Continued)

Parameter	References From	References To	Test Conditions[1]	Limits (Commercial) Min	Limits (Commercial) Typ	Limits (Commercial) Max	Limits (Military) Min	Limits (Military) Typ	Limits (Military) Max	Unit
Output Disable Timing:										
t_{OD1} UD Output Disable	↑$\overline{UOC}$	UD, PB	$\overline{UIC}$ = High			25			25	ns
t_{OD2} UD Input Override	↑$\overline{UIC}$	UD, PB	$\overline{UOC}$ = Low			30			30	ns
t_{OD3} $\overline{IV}$ Data Master Disable	↑$\overline{ME}$	$\overline{IV}$	WC = SC = Low			20			20	ns
t_{OD4} $\overline{IV}$ Data Write Override	↑WC	$\overline{IV}$	SC = $\overline{ME}$ = Low			20			20	ns
t_{OD5} $\overline{IV}$ Data Select Override	↑SC	$\overline{IV}$	WC = $\overline{ME}$ = Low			20			20	ns
Setup Times:										
t_{S1} UD Clock Setup Time	UD, PB	↓MCLK	$\overline{UIC}$ = Low	15			15			ns
t_{S2} UD Control Setup Time	UD, PB	↑$\overline{UIC}$	MCLK = High	15			15			ns
t_{S3} User Input Control Setup Time	↓$\overline{UIC}$	↓MCLK		25			25			ns
t_{S4} $\overline{IV}$ Data Setup Time	$\overline{IV}$	↓MCLK	WC = High or SC = High; $\overline{ME}$ = Low; $\overline{UIC}$ = High	35			35			ns
t_{S5}[2] $\overline{IV}$ Master Enable Setup Time	↓$\overline{ME}$	↓MCLK	WC = High or SC = High; $\overline{UIC}$ = High	30			30			ns
t_{S6} $\overline{IV}$ Write Control Setup Time	↑WC	↓MCLK	SC = $\overline{ME}$ = Low; $\overline{UIC}$ = High	30			30			ns
t_{S7} $\overline{IV}$ Select Control Setup Time	↑SC	↓MCLK	WC = $\overline{ME}$ = Low	30			30			ns
Hold Times:										
t_{H1} UD Clock Hold Time	↓MCLK	UD, PB	$\overline{UIC}$ = Low	15			15			ns
t_{H2} UD Control Hold Time	↑$\overline{UIC}$	UD, PB	MCLK = High	15			15			ns
t_{H3} User Input Control Hold Time	↓MCLK	↑$\overline{UIC}$		0			0			ns
t_{H4} $\overline{IV}$ Data Hold Time	↓MCLK	$\overline{IV}$	WC = High or SC = High; $\overline{ME}$ = Low, $\overline{UIC}$ = High	5			5			ns
t_{H5}[2] $\overline{IV}$ Master Enable Hold Time	↓MCLK	↑$\overline{ME}$	WC = High or SC = High; $\overline{UIC}$ = High	0			0			ns
t_{H6} $\overline{IV}$ Write Control Hold Time	↓MCLK	↓WC	SC = $\overline{ME}$ = Low; $\overline{UIC}$ = High	0			0			ns
t_{H7} $\overline{IV}$ Select Control Hold Time	↓MCLK	↑SC	WC = $\overline{ME}$ = Low	0			0			ns

Notes:
1. All measurements to the $\overline{IV}$ bus assumes the address selection latch is set.
2. If $\overline{ME}$ is to be high (inactive), it must be setup before the rising edge and held after the falling edge of MCLK to avoid unintended writing into or selection of the I/O port.
3. Parameters are measured by holding $\overline{UIC}$ = High and MCLK = Low and changing the state of the PSL input before each EFH pulse.

© IC MASTER 1984

4-INPUT/4-OUTPUT ADDRESSABLE I/O PORT 8X382

PRODUCT DESCRIPTION

The 8X382 I/O Port is an addressable, three-state device designed for use as an interface element in systems that use TTL-compatible busses. Typically, the 8X382 is used with the 8X305 MicroController and its associated Interface Vector ($\overline{IV}$) bus; however, it can also be used with the 8X300 MicroController or an equivalent microprocessor. The 8X382 is functionally the same and pin-for-pin compatible with the older 8X42; however, the new port features better performance, increased drive current, and improved programming procedures.

As shown in the logic diagram of Figure 1, the I/O port consists of eight data latches—bits 0 through 7. These latches are accessed through either of two busses—an 8-bit bidirectional $\overline{IV}$ bus connected to the MicroController and a User Data (UD) bus consisting of four dedicated inputs (bits UD0 through UD3) and four dedicated outputs (bits UD4 through UD7). All eight bits may be read from or four data bits ($\overline{IV4}$-$\overline{IV7}$) can be written into via the $\overline{IV}$ bus; eight bits of I/O address can be written from the $\overline{IV}$ bus. Separate controls are provided for each bus and both busses operate independently. The I/O data latches are transparent, in that, when either bus is enabled for input, all transitions in input data are propagated to the other bus, if that bus in enabled for output.

The 8X382 is available with preprogrammed addresses (0_{10} through 255_{10}); it can also be field-programmed over the same address range. Input/output operations can begin once the I/O port is selected and appropriate control signals are generated. Port selection is implemented by putting the I/O port address (0_{10}-255_{10}) on the $\overline{IV}$ bus; once selected, the I/O port remains selected until a different "port address" is put on the bus. Thus, software overhead is minimized. Data is accessible on the UD bus at all times. A Master Enable ($\overline{ME}$) input, which is typically connected to the Left Bank ($\overline{LB}$) or Right Bank ($\overline{RB}$) output of the MicroController, provides the capability of organizing the $\overline{IV}$ bus into two separate and independent banks of I/O devices.

FEATURES

- **Bidirectional 8-bit MicroController ($\overline{IV}$) bus**
- **User bus—four input bits and four output bits**
- **independent bus operation**
- **Synchronous user data input**
- **Programmed MicroController port address**
- **Three-state TTL outputs with high-drive capabilities**
- **Power-up to predetermined logic state**
- **Directly compatible with 8X305 or 8X300 MicroControllers**
- **Single +5V supply**
- **0.4 inch 24-pin DIP**

PIN CONFIGURATIONS

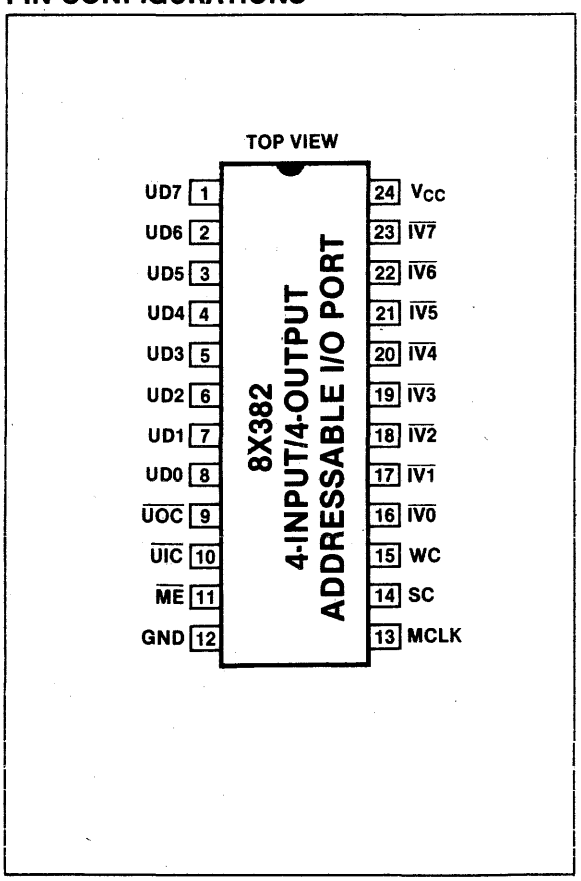

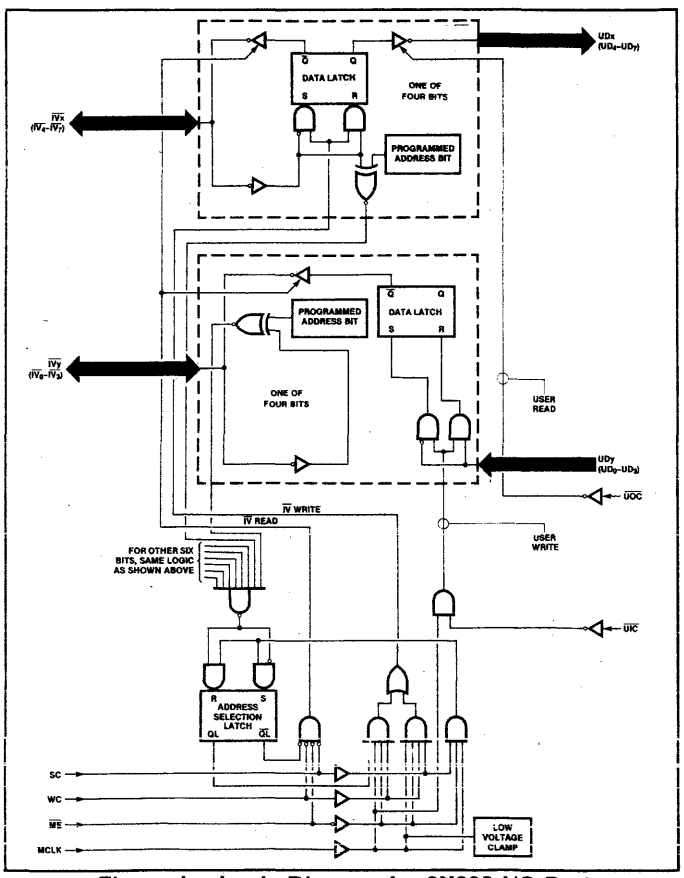

Figure 1. Logic Diagram for 8X382 I/O Port

© IC MASTER 1984

4-INPUT/4-OUTPUT ADDRESSABLE I/O PORT 8X382

DC ELECTRICAL CHARACTERISTICS

COMMERCIAL: 4.75V ≤ V_{CC} ≤ 5.25V, 0°C ≤ T_A ≤ 70°C
MILITARY: 4.5V ≤ V_{CC} ≤ 5.5V, -55°C ≤ T_C ≤ 125°C

ABSOLUTE MAXIMUM RATINGS

PARAMETER		RATING	UNIT
V_{CC}	Power supply voltage[3]	+7	Vdc
V_{IN}	Input voltage[3]	+5.5	Vdc
T_{STG}	Storage temperature range	-65 to +150	°C

PARAMETER		TEST CONDITIONS	LIMITS (COMMERCIAL)			LIMITS (MILITARY)			UNIT
			Min	Typ	Max	Min	Typ	Max	
V_{CC}	Supply Voltage		4.75	5	5.25	4.5	5	5.5	V
V_{IH}	High Level Input Voltage		2.0			2.0			V
V_{IL}	Low Level Input Voltage				0.8			0.8	V
V_{CL}	Input Clamp Voltage	V_{CC}=Min; I_I=-10mA			-1.5			-1.5	V
I_{IH}	High Level Input Current[1]	V_{CC}=Max; V_{IH}=2.7V		5.0	100		5.0	100	μA
I_{IL}	Low Level Input Current[1]	V_{CC}=Max; V_{IL}=0.5V		-350	-550		-350	-550	μA
I_{OZH}	High-Z State Output Current—High Level[4]	V_{CC}=Max; V_{OH}=2.5V			100			100	μA
I_{OZL}	High-Z State Output Current—Low Level[4]	V_{CC}=Max; V_{OL}=0.5V			-100			-100	μA
V_{OL}	Low Level Output Voltage $\overline{IV}$ Bus ($\overline{IV0}$-$\overline{IV7}$)	V_{CC}=Min; I_{OL}= 16mA			0.55			0.55	V
	User Bus (UD4-UD7)	V_{CC}=Min; I_{OL}=24mA			0.55			0.55	V
V_{OH}	High Level Output Voltage	V_{CC}=Min; I_{OH}=-3.2mA	2.4			2.4			V
I_{OS}	Short Circuit Output Current[2] $\overline{IV}$ Bus ($\overline{IV0}$-$\overline{IV7}$)	V_{CC}=Max	-20			-20			mA
	UD Bus (UD4-UD7)	V_{CC}=Max	-10			-10			mA
I_{CC}	Supply Current	V_{CC}=Max; $\overline{ME}$=$\overline{UOC}$=V_{CC}		90	150		90	150	mA

Notes:
1. The input current includes the Three-state leakage current of the output driver on the data lines.
2. Only one output may be shorted at a time.
3. These limits do not apply during address programming.
4. Applies only to pins UD4-UD7.

AC ELECTRICAL CHARACTERISTICS

COMMERCIAL: 4.75V ≤ V_{CC} ≤ 5.25V, 0°C ≤ T_A ≤ 70°C
MILITARY: 4.5V ≤ V_{CC} ≤ 5.5V, -55°C ≤ T_C ≤ 125°C

LOADING: See TEST LOADING CIRCUITS

PARAMETER		REFERENCES[1] FROM	TO	TEST CONDITIONS	LIMITS (COMMERCIAL)			LIMITS (MILITARY)			UNIT
					Min	Typ	Max	Min	Typ	Max	
Pulse Widths:											
t_{W1}	Clock High	↑MCLK	↓MCLK		35			35			ns
t_{W2}	User Input Control	↓$\overline{UIC}$	↑$\overline{UIC}$	MCLK=High	35			35			ns
Propagation Delays:											
t_{PD1}	UD Propagation Delay	UD_{0-3}	$\overline{IV}_{0-3}$	MCLK=High SC=WC=$\overline{ME}$=$\overline{UIC}$=Low			30			30	ns
t_{PD2}	UD Clock Delay	↑MCLK	$\overline{IV}_{0-3}$	UD_{0-3}=Stable; MCLK=High; SC=WC=$\overline{ME}$=$\overline{UIC}$=Low			50			50	ns
t_{PD3}	UD Input Delay	↓$\overline{UIC}$	$\overline{IV}_{0-3}$	UD_{0-3}=Stable; MCLK=High; SC=WC=$\overline{ME}$=Low			50			50	ns
t_{PD4}	$\overline{IV}$ Data Propagation Delay	$\overline{IV}_{4-7}$	UD_{4-7}	MCLK=WC=High; $\overline{ME}$=$\overline{UOC}$=SC=Low			45			45	ns
t_{PD5}	$\overline{IV}$ Data Clock Delay	↑MCLK	UD_{4-7}	$\overline{IV}_{4-7}$=Stable; WC=High; $\overline{ME}$=$\overline{UOC}$=SC=Low			55			55	ns
Output Enable Timing:											
t_{OE1}	UD Output Enable	↓$\overline{UOC}$	UD_{4-7}				30			30	ns
t_{OE3}	$\overline{IV}$ Data Master Enable	↓$\overline{ME}$	$\overline{IV}$	WC=SC=Low			22			25	ns
t_{OE5}	$\overline{IV}$ Data Write Recovery	↓WC	$\overline{IV}$	SC=$\overline{ME}$=Low			25			25	ns
t_{OE6}	$\overline{IV}$ Data Select Recovery	↓SC	$\overline{IV}$	WC=$\overline{ME}$=Low			25			25	ns

© IC MASTER 1984

AC ELECTRICAL CHARACTERISTICS (Cont'd)

PARAMETERS		REFERENCES FROM	REFERENCES TO	TEST CONDITIONS	LIMITS (COMMERCIAL) Min	Typ	Max	LIMITS (MILITARY) Min	Typ	Max	UNIT
Output Disable Timing:											
t_{OD1}	UD Output Disable	↑$\overline{UOC}$	UD_{4-7}				25			25	ns
t_{OD3}[2]	$\overline{IV}$ Data Master Disable	↑$\overline{ME}$	$\overline{IV}$	WC = SC = Low			25			25	ns
t_{OD5}[2]	$\overline{IV}$ Data Write Override	↑WC	$\overline{IV}$	SC = $\overline{ME}$ = Low			20			20	ns
t_{OD6}[2]	$\overline{IV}$ Data Write Override	↑SC	$\overline{IV}$	WC = $\overline{ME}$ = Low			20			20	ns
Setup Times:											
t_{S1}	UD Clock Setup Time	UD_{0-3}	↓MCLK	$\overline{UIC}$ = Low	15			15			ns
t_{S2}	UD Control Setup Time	UD_{0-3}	↑$\overline{UIC}$	MCLK = High	15			15			ns
t_{S3}	User Input Control Setup Time (8X372 only)	↓$\overline{UIC}$	↓MCLK		25			25			ns
t_{S4}	$\overline{IV}$ Data Setup Time	$\overline{IV}$	↓MCLK	WC = High or SC = High; $\overline{ME}$ = Low;	35			35			ns
t_{S5}[3]	$\overline{IV}$ Master Enable Setup Time	↓$\overline{ME}$	↓MCLK	WC = High or SC = High;	30			30			ns
t_{S6}	$\overline{IV}$ Write Control Setup Time	↑WC	↓MCLK	SC = $\overline{ME}$ = Low;	30			30			ns
t_{S7}	$\overline{IV}$ Select Control Setup Time	↑SC	↓MCLK	WC = $\overline{ME}$ = Low	30			30			ns
Hold Times:											
t_{H1}	UD Clock Hold Time	↓MCLK	UD	$\overline{UIC}$ = Low	15			15			ns
t_{H2}	UD Control Hold Time	↑$\overline{UIC}$	UD	MCLK = High	15			15			ns
t_{H3}	User Input Control Hold Time	↓MCLK	↑$\overline{UIC}$		0			0			ns
t_{H4}	Data Hold Time	↓MCLK	$\overline{IV}$	WC = High or SC = High; $\overline{ME}$ = Low,	5			5			ns
t_{H5}[3]	Master Enable Hold Time	↓MCLK	↑$\overline{ME}$	WC = High or SC = High;	0			0			ns
t_{H6}	$\overline{IV}$ Write Control Hold Time	↑MCLK	↓WC	SC = $\overline{ME}$ = Low;	0			0			ns
t_{H7}	$\overline{IV}$ Select Control Hold Time	↑MCLK	↓SC	WC = $\overline{ME}$ = Low	0			0			ns

Notes:
1. All measurements to the $\overline{IV}$ bus assumes the address selection latch is set.
2. These parameters are measured with a capacitive loading of 50 pF and represent the output driver turn-off time.
3. If $\overline{ME}$ is to be high (inactive), it must be setup before the rising edge and held after the falling edge of MCLK to avoid unintended writing into or selection of the I/O port.

© IC MASTER 1984

BIDIRECTIONAL BUS EXTENDER/REPEATER 8X41

N8X41F, N8X41N

PRODUCT DESCRIPTION

The Signetics Asynchronous Bidirectional Bus Extender and Repeater is a general purpose device ideal for system bus expansion applications. The 8X41 consists of eight data channels, each with one pair of terminals (A_i and B_i); each data channel can be operated independently.

The device requires no external controls since all intelligence is internally generated; thus, operation of the device is completely autonomous. The first logic low signal that occurs on one channel terminal (A_i or B_i) will be repeated on the corresponding terminal (B_i or A_i) of the same channel.

FUNCTIONAL OPERATION

As shown, the 8X41 consists of eight functionally independent yet logically identical channels. Each channel consists of two bus terminals (A_i and B_i); each terminal is internally connected to an open-collector driver and a high-impedance receiver. The monitoring state of each channel is defined when both terminals (A_i and B_i) are "high"; in this state, the internal logic of the 8X41 continually examines the A and B bus signals to determine signal direction—A_i to B_i or B_i to A_i. A low signal occurring at either of the two terminals causes the open-collector driver on the opposite terminal to follow suit; hence, the signal is repeated by the 8X41. For each channel, latches L1 and L2 determine signal direction.

The internal automatic direction control can be overridden by either or both of the common disable inputs—DBA and DAB. When DBA is driven low (DAB = high), the B_i to A_i path is interrupted and the 8X41 becomes a unidirectional repeater in the A_i to B_i direction only. With these conditions reversed (DAB = low and DBA = high), the A_i to B_i path is interrupted and the chip functions as a unidirectional repeater in the B_i to A_i direction. When both control signals are low, data passage is inhibited in both directions.

DESIGN FEATURES

- **Intelligent bidirectional bus repeater with self-generating or external control**
- **Eight independent channels**
- **Open-collector outputs (meets DEC UNIBUS* specifications)**
- **TTL compatible**
- **High speed (30-nanoseconds max)**
- **Expandable to any number of bits**
- **High input impedance for every operating value of V_{CC}**
- **Low input current (less than 100-microamperes); high output current (up to 70-milliamperes)**
- **24-pin DIP**
- **+5V supply**

*Trademark of the Digital Equipment Corporation

PIN CONFIGURATIONS

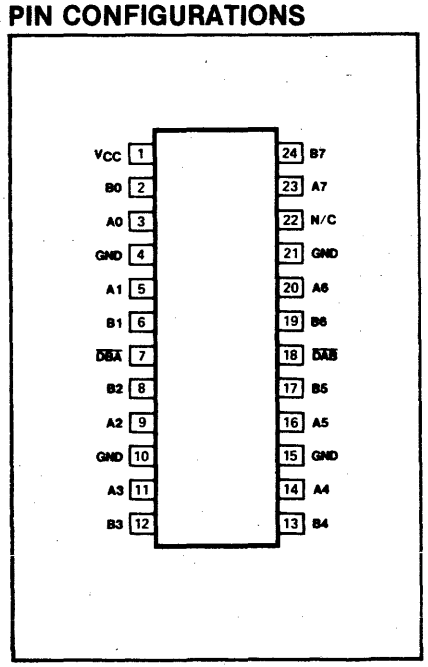

LOGIC DIAGRAM

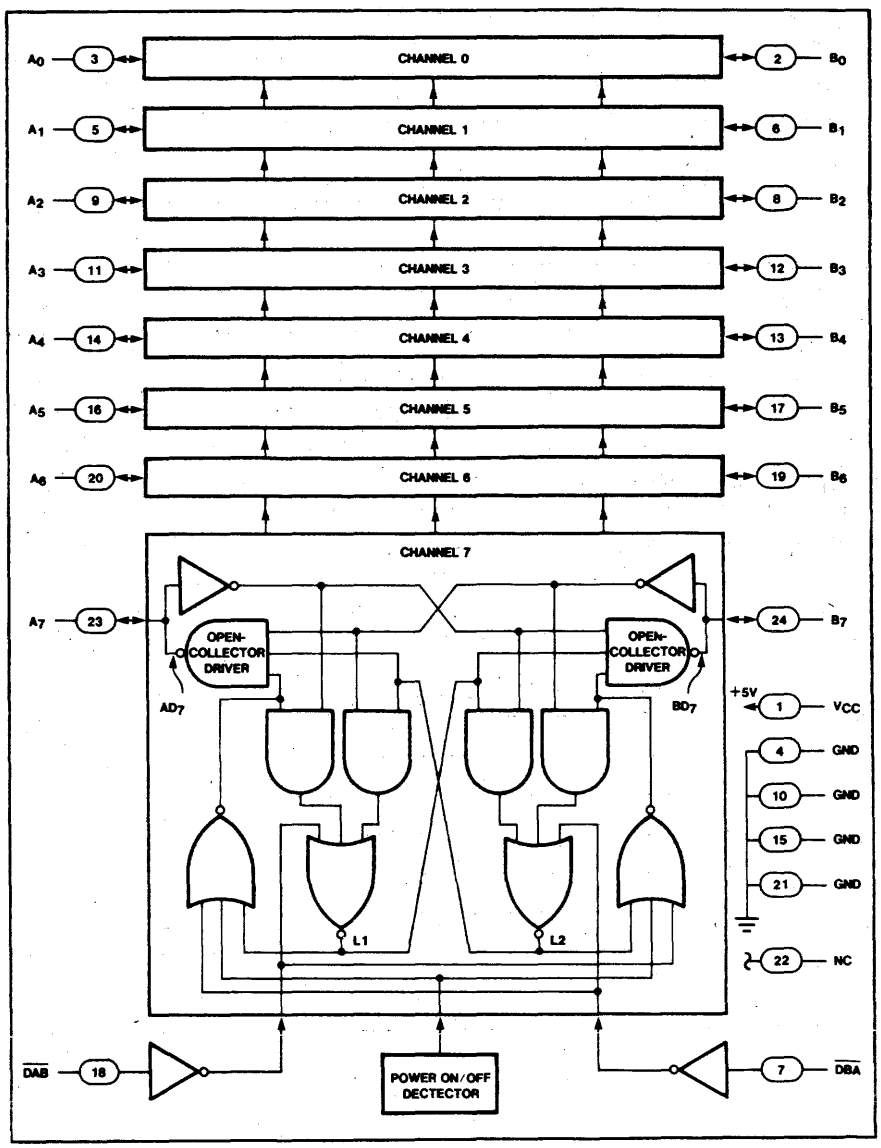

AUTODIRECTIONAL BUS TRANSCEIVER 8X41

DC CHARACTERISTICS V_{CC} = 5V (± 5%); T_A = 0°C to 70°C

PARAMETER	DESCRIPTION	TEST CONDITIONS	LIMITS			UNITS
			Min	Typ	Max	
V_{OL}	Bus output low voltage (driver ON)	I_{OL} = 70 mA; V_{CC} = Min			0.5	V
*V_B	Bus input threshold voltage (driver OFF)		1.3		1.7	V
V_{IH} ($\overline{DBA}$, $\overline{DAB}$ only)	High level input voltage		2.0			V
V_{IL} ($\overline{DBA}$, $\overline{DAB}$ only)	Low level input voltage				0.8	V
V_{IC}	Input clamp voltage	V_{CC} = Min; I_{IL} = −18mA			−1.5	V
V_{PD}	Power ON/OFF detector threshold voltage		3.7		4.35	V
I_{IH} ($\overline{DBA}$, $\overline{DAB}$ only)	High level input current	V_{CC} = Max; V_{IN} = 2.7V			20	μA
I_{IL} ($\overline{DBA}$, $\overline{DAB}$ only)	Low level input current	V_{CC} = Max; V_{IN} = 0.4V			−0.4	mA
I_I	Bus input current (driver OFF)	V_{CC} = Max; V_B = 2.5V*			100	μA
		V_{CC} = Max; V_B = 0V*			−20	μA
I_{OFF}	Bus leakage current (power OFF)	V_{CC} = 0V; V_B = 2.5V*			100	μA
I_{CC}	Supply current	V_{CC} = Max; A_0-A_7 = Low or B_0-B_7 = Low and $\overline{DBA}$ = $\overline{DAB}$ = High		145	180	mA

*V_B = V_{BUS}

LOAD CIRCUIT FOR OUTPUTS

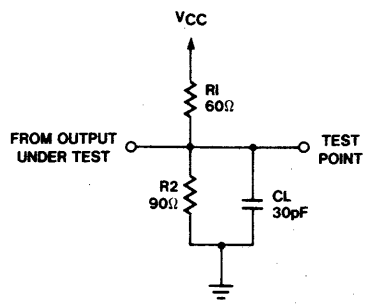

Note:
C_L includes probe and jig capacitance

AC CHARACTERISTICS V_{CC} = 5V (± 5%); T_A = 0°C to 70°C

PARAMETER	DESCRIPTION	FROM	TO	TEST CONDITIONS	LIMITS			UNITS
					Min	Typ	Max	
t_{PLL}	Propagation delay	Low A_i Low B_i	Low BD_i Low AD_i	$\overline{DBA}$ = $\overline{DAB}$ = High			30	ns
t_{PHH}	Propagation delay	High A_i High B_i	High BD_i High AD_i	$\overline{DBA}$ = $\overline{DAB}$ = High			30	ns
t_{DHH}	Propagation delay	High A_i	High BD_i	$\overline{DBA}$ = Low; $\overline{DAB}$ = High			25	ns
		High B_i	High AD_i	$\overline{DAB}$ = Low; $\overline{DBA}$ = High			25	ns
t_{DLL}	Propagation delay	Low A_i	Low BD_i	$\overline{DBA}$ = Low; $\overline{DAB}$ = High			25	ns
		Low B_i	Low AD_i	$\overline{DAB}$ = Low; $\overline{DBA}$ = High			25	ns
t_{DEH}	Propagation delay	Low $\overline{DBA}$	High AD_i	$\overline{DAB}$ = Low; B_i = Low			30	ns
t_{DEL}	Propagation delay	High $\overline{DBA}$	Low AD_i	$\overline{DAB}$ = Low; B_i = Low			30	ns
t_{DEH}	Propagation delay	Low $\overline{DAB}$	High BD_i	$\overline{DBA}$ = Low; A_i = Low			30	ns
t_{DEL}	Propagation delay	High $\overline{DAB}$	Low BD_i	$\overline{DBA}$ = Low; A_i = Low			30	ns
t_r	Recovery time (see timing diagram)	—	—	$\overline{DBA}$ = $\overline{DAB}$ = High		20		ns

Notes: A_i = External signal AD_i = Output A driver B_i = External signal BD_i = Output B driver

© IC MASTER 1984

FIFO RAM CONTROLLER (FRC) 8X60

PRODUCT DESCRIPTION

The Signetics 8X60 FIFO RAM Controller (FRC) is an address and status generator designed to implement a high-speed/high-capacity First-In/First-Out (FIFO) stack utilizing standard off-the-shelf RAMs. The FRC can control up to 4096 words of buffer memory; intermediate buffer sizes can be selected—refer to the memory length table on the next page. Built-in arbitration logic handles read/write operations on a first-come/first-served basis.

As shown in Figure 1, the FRC consists of:

- A 12-Bit Write Address Generation Counter (Counter #1) and a 12-Bit Read Address Generation Counter (Counter #2).
- A 12-Bit Up/Down Status Counter (Counter #3).
- Twelve Three-State Address Drivers.
- Control Logic.

The two address counters, #1 and #2, respectively, are used to generate write and read addresses; the outputs of these counters are multiplexed to the three-state address drivers. Counter #3 generates *full, empty,* and *half full* status.

DESIGN FEATURES

- **12-Bit FIFO Address Generator**
- **Data Rate Exceeding 8MHz**
- **Asynchronous Read/Write Operations**
- **Three-State Address Outputs**
- **User-Defined Word Width**
- **Specifically Designed for Use with High-Speed Bipolar RAMs (Adaptable for Use with MOS RAMs)**
- **TTL Input and Output**
- **16mA Address-Drive Capability**

USE AND APPLICATION

- **Interface Between Independently-Clocked Systems**
- **Buffer Memories for Disk and/or Tape**
- **Data Communication Concentrators**
- **CPU/Terminal Buffering**
- **DMA Applications**
- **CRT Terminals**

PACKAGE AND PIN DESIGNATIONS

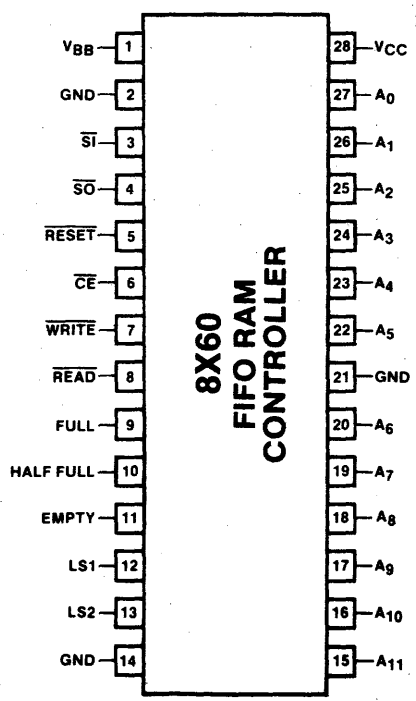

PIN NO.	IDENTIFIER	FUNCTION
1	V_{BB}	Supply voltage for internal circuits.
2, 14, 21	GND	Circuit ground.
3	$\overline{SI}$	Shift-In request for write cycle; active-low input.
4	$\overline{SO}$	Shift-Out request for read cycle; active-low input.
5	$\overline{RESET}$	Active-low master reset input.
6	$\overline{CE}$	Active-low chip enable input.
7	$\overline{WRITE}$	Write cycle address valid; active-low output.
8	$\overline{READ}$	Read cycle address valid; active-low output.
9	FULL	Memory full status output; also, override input capability. Active when *high*.
10	HALF FULL	Memory half-full status output; active-high.
11	EMPTY	Memory empty status output; also, override input capability. Active when *high*
12	LS1	Least significant bit (LSB) of the memory length select input.
13	LS2	Most significant bit (MSB) of the memory length select input.
15-20 22-27	A_{11}-A_0	Three-state address outputs; A_0 = LSB.
28	V_{CC}	Supply voltage.

© IC MASTER 1984

FIFO RAM CONTROLLER (FRC) 8X60

positive-going edge of $\overline{SO}$ when Counter #3 reaches a count of 127, the HALF FULL output will go from *high*-to-*low*.

- **FULL**—this signal serves both as a status output and as an override input. The FULL signal goes *high* on the negative-going edge of $\overline{SI}$ if all bits of Counter #3 for selected length are equal to "1". The FULL output goes from *high*-to-*low* on the negative-going edge of $\overline{SO}$.
- **EMPTY**—this signal also serves as a status output and as an override input. On the negative-going edge of $\overline{SO}$, the EMPTY output is driven *high* if Status Counter #3 contains a value of "1"; on the positive-going edge of $\overline{SO}$, the counter is decremented to "0". The EMPTY output goes from *high*-to-*low* on the negative-going edge of $\overline{SI}$.

Once the FULL signal is *high*, further Write Cycle Requests ($\overline{SI}$ = low) are ignored; similarly, once the EMPTY signal is *high*, further Read Cycle requests ($\overline{SO}$ = low) are ignored. However, to accommodate diversified applications, the FULL and EMPTY outputs are open-collector with on-chip 4.7K passive pull-up resistors. If either the FULL or EMPTY pins are forced *low* via external control, the corresponding *write* or *read* cycle may resume (provided the external FULL or EMPTY input is held *low* until the corresponding $\overline{WRITE}$ or $\overline{READ}$ output goes *low* and the address/status counters will continue normal operation.

The user must force the $\overline{RESET}$ input *low* to initialize the chip. (*Note.* If the $\overline{RESET}$ signal is driven *low* during a *write* or *read* cycle, the address output may have a short period of uncertainty before assuming a high-impedance state.) The following actions occur when $\overline{RESET}$ is active:

- All internal counters are set to "0".
- All address output lines are forced to the high-impedance state.
- HALF FULL and FULL outputs are forced *low*.
- $\overline{WRITE}$, $\overline{READ}$, and EMPTY outputs are forced high.

When $\overline{CE}$ is *high*, the address output lines are forced to the high-impedance state, further *write* or *read* cycle requests are ignored, and all counters remain unchanged. If $\overline{CE}$ switches from *low*-to-*high* during a *write* or *read* cycle, the cycle in progress is always completed before the disabled state is entered.

SUMMARY OF OPERATION

INPUTS				INITIAL	RESULTING OUTPUTS			
$\overline{RESET}$	$\overline{CE}$	$\overline{SI}$	$\overline{SO}$	CONDITIONS	$\overline{WRITE}$	$\overline{READ}$	ADDRESS BUS	COMMENTS
L	X	X	X		H	H	Hi-Z	Reset all counters to 0.
H	X	H	H		H	H	Hi-Z	No action
H	L	L	H	FULL = L	L	H	Write address from Ctr #1	Shift into FIFO stack (Write Cycle)
H	L	L	H	FULL = H	H	H	Hi-Z	Stack full (Write inhibited)
H	L	H	L	EMPTY = L	H	L	Read address from Ctr #2	Shift out of FIFO stack (Read Cycle)
H	L	H	L	EMPTY = H	H	H	Hi-Z	Stack empty (Read inhibited)
H	L	L	↓	Write cycle in progress	L	H	Write address from Ctr #1	Continue write cycle (until $\overline{SI}$ goes high)
H	L	↓	L	Read cycle in progress	H	L	Read address from Ctr #2	Continue read cycle (until $\overline{SO}$ goes high)
H	L	L	L	EMPTY = H	L	H	Write address from Ctr #1	Shift in (Read inhibited)
H	L	L	L	FULL = H	H	L	Read address from Ctr #2	Shift out (Write inhibited)
H	L	↑	H	Write cycle in progress	↑	H	Goes to Hi-Z	Increment write address counter #1 and status counter #3
H	L	H	↑	Read cycle in progress	H	↑	Goes to Hi-Z	Increment read address counter #2; decrement status counter #3
H	L	↑	L	Write cycle in progress (Note 1)	↑	↓	Changes to read address from Ctr #2	Increment write address counter #1 and status counter #3
H	L	L	↑	Read cycle in progress (Note 2)	↓	↑	Changes to write address from Ctr #1	Increment read address counter #2; decrement status counter #3
H	H	↓	H		H	H	Hi-Z	Chip disabled
H	H	H	↓		H	H	Hi-Z	Chip disabled
H	↑	L	X	FULL = L; write cycle begun (Note 1)	L	H	Write address from Ctr #1	Continue write cycle (until $\overline{SI}$ goes high)
H	↑	X	L	EMPTY = L; read cycle begun (Note 2)	H	L	Read address from Ctr #2	Continue read cycle (until $\overline{SO}$ goes high)
H	↓	L	L	FULL = L; EMPTY = L	—	—	—	This set of conditions should be avoided

Notes:

1. Write cycle will occur if either $\overline{SI}$ goes *low* before $\overline{SO}$ goes *low* or EMPTY = H when $\overline{SO}$ goes *low*.
2. Read cycle will occur if either $\overline{SO}$ goes *low* before $\overline{SI}$ goes *low* or FULL = H when $\overline{SI}$ goes

© IC MASTER 1984

FIFO RAM CONTROLLER (FRC) 8X60

BLOCK DIAGRAM

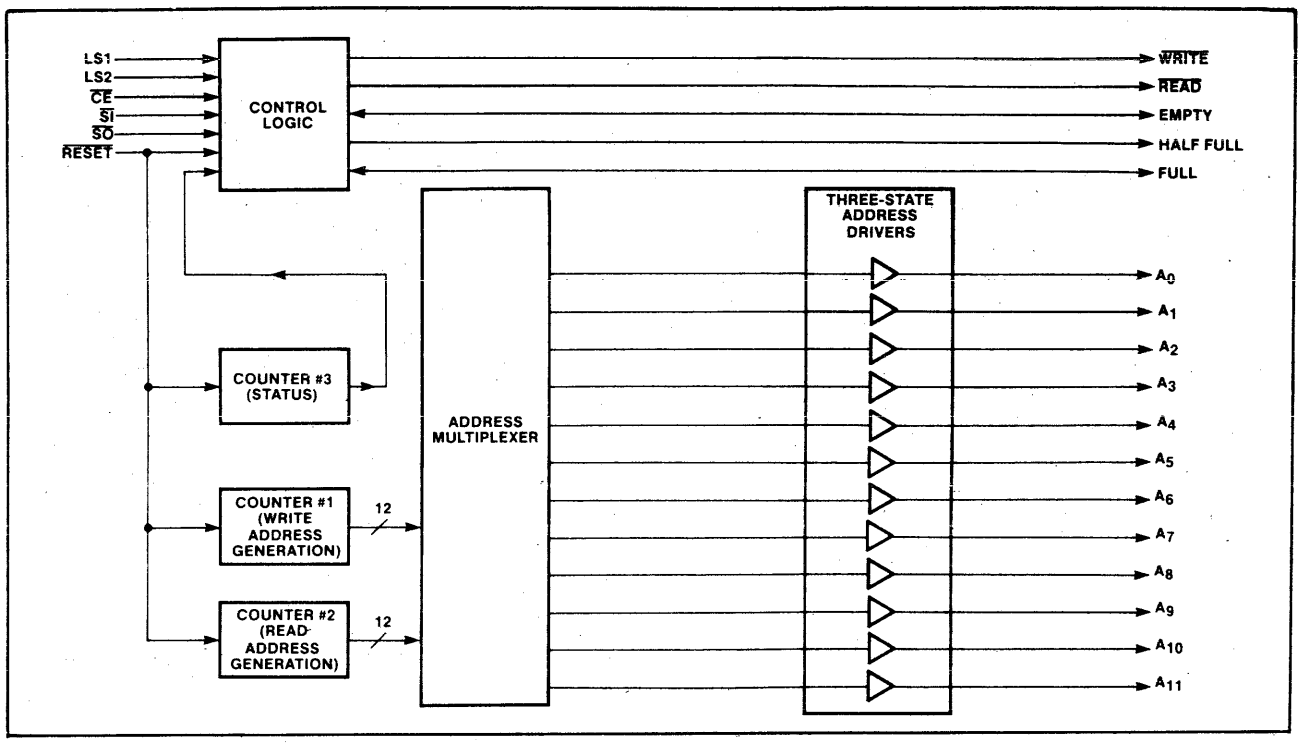

Figure 1. Functional Block Diagram of FIFO RAM Controller

FUNCTIONAL OPERATION

The FRC operates in either of two basic modes—*write* into the FIFO buffer memory or *read* from the FIFO buffer memory. These two operations are described in subsequent paragraphs and the complete sequence is summarized on the next page.

FIFO BUFFER MEMORY—WRITE CYCLE

To perform a write operation, $\overline{SO}$ must be *high* and SI must be *low*. When these conditions exist and other control parameters are satisfied, the write address in Counter #1 is output to the address bus via the multiplexer and the $\overline{WRITE}$ output goes *low*. (*Note.* Normally, the $\overline{WRITE}$ output goes *low* after the address output becomes stable. The $\overline{WRITE}$ output may then act as a *write* or *chip* enable for the RAMs that are used to implement the memory.)

When the *write* cycle is ended ($\overline{SI}$ is forced high), the $\overline{WRITE}$ output goes *high*, the address output buffers return to a high-impedance state, Counter #1 (Write Address Generation) and Counter #3 (Status) are both incremented, and Counter #2 (Read Address Generation) remains unchanged.

FIFO BUFFER MEMORY—READ CYCLE

To perform a read operation, $\overline{SI}$ must be *high* and $\overline{SO}$ must be *low*. When these conditions exist and other control parameters are satisfied, the read address contained in Counter #2 is output to the address bus and the $\overline{READ}$ output goes *low*.

When the *read* cycle is ended ($\overline{SO}$ is forced *high*), the $\overline{READ}$ output goes *high*, the output buffers return to a high-impedance state, Counter #2 (Read Address Generation) is incremented, Counter #3 (Status) is decremented, and Counter #1 (Write Address Generation) remains unchanged.

CONTROL LOGIC

To prevent the possibility of operational conflicts, $\overline{SI}$ and $\overline{SO}$ are treated on a first-come/first-served basis; these two input signals are controlled by internal arbitration logic. If one cycle is requested while the other cycle is in progress, the requested cycle will commence as soon as the current cycle is complete (provided other control parameters are satisfied).

As shown in the accompanying diagram, the buffer length of the FIFO memory can be hardware-selected via the Length Select (LS1.LS2) inputs. When less than the maximum length is selected, the unused high-order bits of the address outputs are held in the high-impedance state.

MEMORY LENGTH

LSI	LS2	HALF LENGTH	FULL LENGTH
L	L	2048	4096
H	L	32	64
L	H	512	1024
H	H	128	256

Generation of the status output signals (HALF FULL, FULL, and EMPTY) is a function of the Length Select (LS1, LS2) inputs and the current state of Status Counter #3. In general, the status outputs reflect the conditions that follow:

- **HALF FULL**— this status output signal goes *high* on the positive-going edge of SI if the MSB of the selected length of Counter #3 becomes a "1". The HALF FULL signal will go from *high*-to-*low* on the positive-going edge of $\overline{SO}$ when, after the *read* cycle, the selected length of Counter #3 changes from "100...00" to "011...11". For example, if the selected memory length is 256 words (FULL = 256), then HALF FULL = 128 words; hence, on the

© IC MASTER 1984

ABSOLUTE MAXIMUM RATINGS

PARAMETER	DESCRIPTION	RATING	UNIT
V_{CC}	Power Supply Voltage	+7	Vdc
V_{BB}	Supply Voltage for Internal Circuits	+4	Vdc
V_{IN}	Input Voltage	+5.5	Vdc
V_O	Off-State Output Voltage	+5.5	Vdc
T_{STG}	Storage Temperature Range	−65 to +150	°C

CONDITIONS: Commercial— V_{CC} = 5.0V (±5%), V_{BB} = 1.5V (±5%)[1], 0°C≤T_A≤70°C

Military— V_{CC} = 5.0V (±10%), V_{BB} = 1.5V (±10%)[1], T_A ≤ −55°C, T_C ≤ 125°C

DC ELECTRICAL CHARACTERISTICS

PARAMETER		TEST CONDITIONS	LIMITS (COMMERCIAL) MIN	TYP[2]	MAX	LIMITS (MILITARY) MIN	TYP[2]	MAX	UNITS
V_{IH}	High level input voltage	Note 3	2.0			2.0			V
V_{IL}	Low level input voltage				0.8			0.8	V
V_{OH}	High level output voltage: All outputs except FULL and EMPTY	V_{CC} = Min; I_{OH} = −2.6mA	2.7	3.5		2.5	3.5		V
V_{OL}	Low level output voltage: Address Bus, $\overline{WRITE}$, $\overline{READ}$	V_{CC} = Min, I_{OL} = 16mA		0.38	0.5		0.38	0.5	V
	HALF FULL, FULL, and EMPTY	V_{CC} = Min; I_{OL} = 8mA		0.35	0.5		0.35	0.5	V
V_{CD}	Diode clamp voltage: All inputs except FULL and EMPTY	V_{CC} = Min; I_{CD} = −18mA	−1.5	−0.8		−1.5	−0.8		V
I_{IH}	High level input current: All inptus except FULL and EMPTY	V_{CC} = Max; V_{IH} = 2.7V		0.1	20		0.1	20	μA
	FULL and EMPTY	V_{CC} = Max; V_{IH} = 2.7V; Stack FULL or Stack EMPTY (Note 3)		−470	−750		−470	−900	μA
I_{IL}	Low level input current: All inputs except FULL and EMPTY	V_{CC} = Max; V_{IL} = 0.4V		−0.17	−0.4		−0.17	−0.4	mA
	FULL and EMPTY	V_{CC} = Max; V_{IL} = 0.4V; Stack FULL or Stack EMPTY		−1.12	−1.8		−1.12	−1.8	mA
I_{OH}	High level output current: FULL, EMPTY	V_{CC} = Min, V_{OH} = V_{CC} (min)		15	100		15	100	μA
I_{OZH}	High-Z output current (HIGH); Address Bus (Three-State)	V_{CC} = Max; V_{OUT} = 2.4V		0.9	20		0.9	20	μA
I_{OZL}	High-Z output current (LOW); Address Bus (Three-State)	V_{CC} = Max; V_{OUT} = 0.5V		−0.6	−20		−0.6	−20	μA
I_I	Input leakage current: All inputs except FULL and EMPTY	V_{CC} = Max; V_{IN} = 5.5V		0.03	0.1		0.03	0.1	mA
I_{OS}	Short-circuit output current: Address Bus and HALF FULL	V_{CC} = Max; V_{OH} = 0V	−15	−68	−100	−15	−68	−100	mA
	$\overline{WRITE}$, $\overline{READ}$	V_{CC} = Max; V_{OH} = 0V	−40	−73	−100	−40	−73	−100	mA
I_{CC}	Supply current from V_{CC}	V_{CC} = Max; Address Bus = High-Z, 0°C →		81	140	−55°C →		140	mA
		V_{CC} = Max; Address Bus = High-Z, 70°C →		81	110	125°C →		100	mA
I_{BB}	Supply current from V_{BB}	V_{BB} = Max, 0°C →		63	95	−55°C	63	100	mA
		V_{BB} = Max, 70°C →		63	85	125°C	63	90	mA

NOTES
1. V_{BB} can be obtained from a regulated 1.5V supply; alternately, proper supply current (I_{BB}) can be obtained by connecting a 56-ohm (±5%, 0.5W) resistor in series with V_{CC} as shown later in the **APPLICATIONS** diagram.
2. Typical limits are: V_{CC} = 5.0V; T_A = 25°C.
3. Because of the internal pull-up resistor on the FULL and EMPTY pins, a negative current is required to force the required voltage.
4. V_{OL} at I_{OL} = 4mA for Military part.

© IC MASTER 1984

FIFO RAM CONTROLLER (FRC) 8X60

CONDITIONS: Commercial— V_{CC} = 5.0V (±5%), V_{BB} = 1.5V (±5%), 0°C≤T_A≤70°C

Military— V_{CC} = 5.0V (±10%), V_{BB} = 1.5V (±10%), T_A ≤ −55°C, T_C ≤ 125°C

Loading— See TEST LOADING CIRCUITS

AC ELECTRICAL CHARACTERISTICS

PARAMETERS	REFERENCES FROM	REFERENCES TO	TEST CONDITIONS	LIMITS (COMMERCIAL) MIN	TYP	MAX	LIMITS (MILITARY) MIN	TYP	MAX	UNITS
PULSE WIDTHS										
T_{LH} $\overline{SI}$ high	↑$\overline{SI}$	↓$\overline{SI}$	Stack approaching FULL (Note 1)	25	13		25	13		ns
T_{DH} $\overline{SO}$ high	↑$\overline{SO}$	↓$\overline{SO}$	Stack approaching EMPTY (Note 1)	30	16		30	16		ns
WRITE CYCLE TIMING										
T_{LA} Address stable delay	↓$\overline{SI}$	An	FULL = Low; $\overline{SO}$ = High		40	55		40	60	ns
T_{AW} Address lead time	An	↓$\overline{WRITE}$		3			0			ns
T_{LAW} $\overline{WRITE}$ output active delay	↓$\overline{SI}$	↓$\overline{WRITE}$	FULL = Low; $\overline{SO}$ = High	35	51	65	35	51	70	ns
T_{LW} $\overline{WRITE}$ output inactive delay	↑$\overline{SI}$	↑$\overline{WRITE}$			3	10		3	10	ns
T_{WA} Address lag time	↑$\overline{WRITE}$	An		20	34		10	34		ns
T_{LT} Address output disable	↑$\overline{SI}$	An(Hi-Z)			37	60		37	60	ns
T_{LF} FULL status active delay	↓$\overline{SI}$	↑FULL	Stack approaching FULL; $\overline{SO}$ = High		39	65		39	70	ns
T_{LE} EMPTY status inactive delay	↓$\overline{SI}$	↓EMPTY	Stack = EMPTY		40	65		40	65	ns
T_{HFH} HALF-FULL status active delay	↑$\overline{SI}$	↑HALF FULL	Stack approaching HALF FULL		30	45		30	50	ns
T_{DW} $\overline{WRITE}$ output active after read	↑$\overline{SO}$	↓$\overline{WRITE}$	Both $\overline{SI}$ & $\overline{READ}$ = Low		74	95		74	100	ns
READ CYCLE TIMING										
T_{DA} Address stable delay	↓$\overline{SO}$	An	EMPTY = Low; $\overline{SI}$ = High		40	55		40	60	ns
T_{AR} Address lead time	An	↓$\overline{READ}$		−1			−5			ns
T_{DAR} $\overline{READ}$ output active delay	↓$\overline{SO}$	↓$\overline{READ}$	EMPTY = Low; $\overline{SI}$ = High	30	48	65		35	70	ns
T_{DR} $\overline{READ}$ output inactive delay	↑$\overline{SO}$	↑$\overline{READ}$			5	10		5	10	ns
T_{RA} Address lag time	↑$\overline{READ}$	An		20	32		10	32		ns
T_{DT} Address output disable	↑$\overline{SO}$	An(Hi-Z)			37	60		37	60	ns
T_{DE} EMPTY status active delay	↓$\overline{SO}$	↑EMPTY	Stack approaching EMPTY; $\overline{SI}$=High		38	50		38	50	ns
T_{DF} FULL status inactive delay	↓$\overline{SO}$	↓FULL	Stack =FULL		38	50		38	65	ns
T_{HFL} HALF-FULL status inactive delay	↑$\overline{SO}$	↓HALF FULL	Stack exactly HALF FULL		54	75		54	85	ns
T_{LR} $\overline{READ}$ output active after write	↑$\overline{SI}$	↓$\overline{READ}$	Both $\overline{SO}$ & $\overline{WRITE}$ = Low		70	90		70	100	ns
CHIP ENABLE TIMING (WRITE)										
T_{HEW} Chip enable hold time[2]	↓$\overline{SI}$	↑$\overline{CE}$	FULL = Low; $\overline{SO}$ = High	10	1		10	1		ns
T_{SEW} Chip disable setup time[3]	↑$\overline{CE}$	↓$\overline{SI}$	FULL = Low; $\overline{SO}$ = High	10	1		10	1		ns
T_{PEW} Chip enable delay time	↓$\overline{CE}$	↓$\overline{WRITE}$	FULL = Low; $\overline{SI}$ = Low; $\overline{SO}$ = High		69	95		69	110	ns
CHIP ENABLE TIMING (READ)										
T_{HER} Chip enable hold time[2]	↓$\overline{SO}$	↑$\overline{CE}$	EMPTY = Low; $\overline{SI}$ = High	10	1		10	1		ns
T_{SER} Chip disable setup time[3]	↑$\overline{CE}$	↓$\overline{SO}$	EMPTY = Low; $\overline{SI}$ = High	10	1		10	1		ns
T_{PER} Chip enable delay time	↓$\overline{CE}$	↓$\overline{READ}$	EMPTY = Low; $\overline{SO}$ = Low; $\overline{SI}$ = High		64	95		64	105	ns
RESET TIMING										
T_{RR} $\overline{RESET}$ recovery	↑$\overline{RESET}$	↓$\overline{WRITE}$	$\overline{SI}$ = Low		57	75		57	80	ns
T_{RL} $\overline{RESET}$ pulse width (low)	↓$\overline{RESET}$	↑$\overline{RESET}$		25	8		25	8		ns
FULL/EMPTY OVERRIDE TIMING:										
T_{FW} Override Recovery for FULL	↓FULL	↓$\overline{WRITE}$	Stack = FULL; $\overline{SI}$ = Low; $\overline{SO}$ = High		70	95		70	110	ns
T_{ER} Override Recovery for EMPTY	↓EMPTY	↓$\overline{READ}$	Stack = EMPTY; $\overline{SO}$ = Low; $\overline{SI}$ = High		65	90		65	105	ns

NOTES
1. Such that write/read request is inhibited after stack becomes full/empty.
2. The earliest rising edge of $\overline{CE}$ such that the $\overline{WRITE}$ or $\overline{READ}$ output always occurs.
3. The latest rising edge of $\overline{CE}$ such that the $\overline{WRITE}$ or $\overline{READ}$ output never occurs.

© IC MASTER 1984

SUPPORT FACILITIES

The 8X300 Family is strongly supported with Development Systems, Support Software, Applications, Training and Documentation. Together, this support provides the user with a powerful set of tools to evaluate, design, debug, and implement a simple or complex system.

DEVELOPMENT SYSTEMS

EZ-PRO (Manufactured by American Automation)

- Universal Development System
- Relocating macroassembler
- Full speed in-circuit emulator/debugger
- Maximum memory support

8X305 ICEPACK (Manufactured by Sigen Corp.)

- Full speed in-circuit emulator/debugger
- RS-232 interface to CP/M or Intellec
- 4K word memory/8-bit extended microcode
- Low cost

Signetics 8X305 Prototyping System

- Single board module
- RS-232 interface
- Resident monitor
- 256 to 4096 words of Writable Control Storage
- Minimum cost

SOFTWARE

MCCAP CrossAssembler

- Full function macroassembler
  - — Free format source code
  - — Symbolic address assignment
  - — Nested macro support
  - — Cross-reference table
  - — Supports extended microcode
- Multiple output formats
- Availabe in two versions
  - — FORTRAN source code
  - — Intellec/ISIS object code

APPLICATIONS SUPPORT

Field applications engineers

Product applications engineers

Application notes

- Floppy disk controller
- ECC
- Hard disk controller
- Local network interfacing

TRAINING AND DOCUMENTATION

- Videocassette training course
- Designer's seminar
- 8X305 User's Manual
- 8X300 Family Product Capabilities Manual
- MCCAP Programming Manual
- Full complement of Data Sheets

BLOCK DIAGRAM

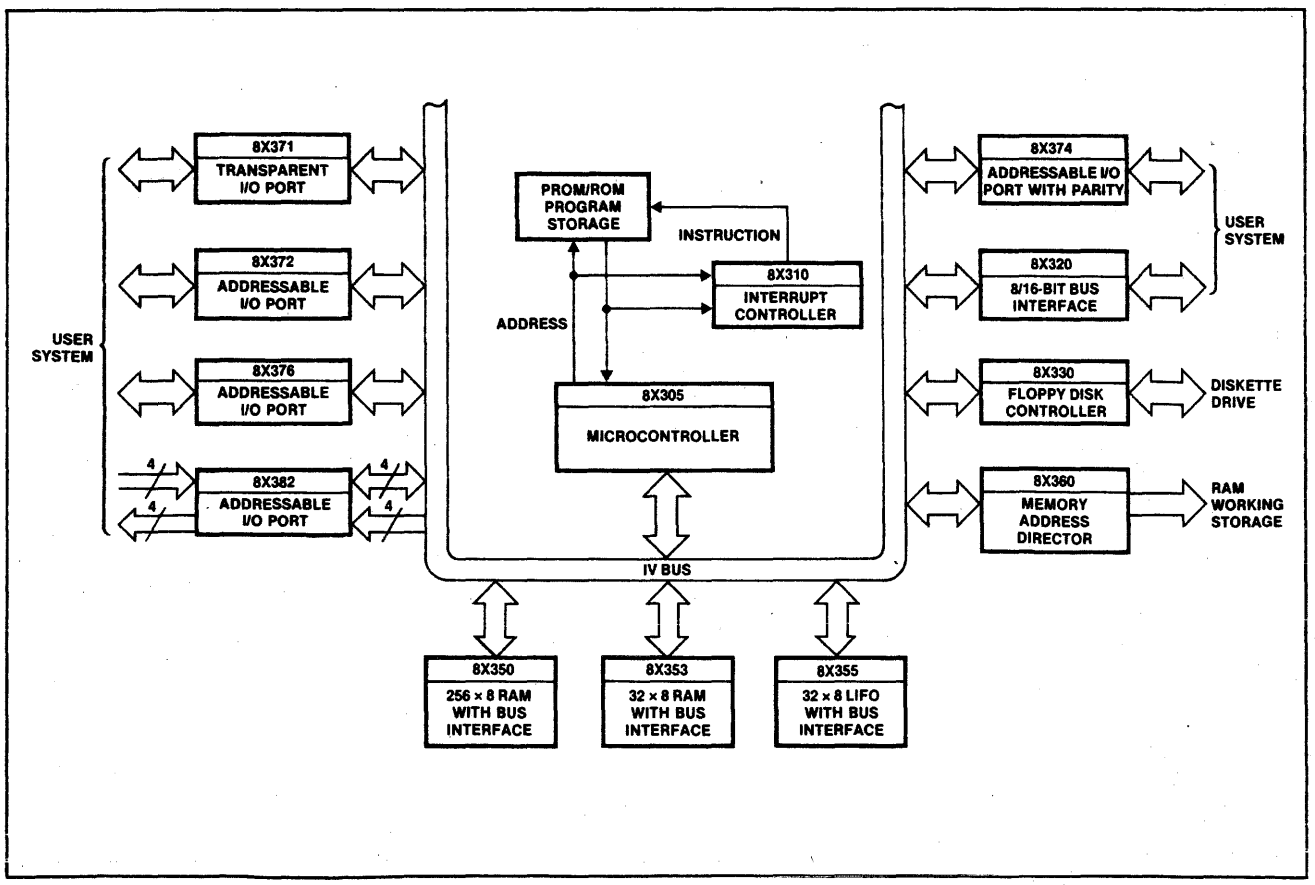

© IC MASTER 1984

CONTROL STORE SEQUENCER 8X02A

N8X02AN

PRODUCT DESCRIPTION

The Signetics 8X02A Control Store Sequencer generates addresses to access instructions from a microprogram memory (control store). This high-speed device provides an efficient means of controlling the flow through a microprogram with a powerful set of sequencing functions. The 8X02A can directly address up to 1024 microinstructions; however, the total address space can be expanded by adding conventional paging techniques. Combined with memory, the 8X02A forms a powerful control section for CPU's, controllers, test equipment, and other microprogram-controlled systems.

FEATURES

- **10-Bit Address Generator (1024 Microinstruction Addressability)**
- **Operating Frequency Exceeding 12 MHz**
- **Direct Branching Over Full Address Range**
- **Conditional Branching**
- **Subroutine Branching Capability**
- **4-Level Stack Register File**
- **Loop Control Facility Using Stack**
- **Three-State Address Outputs**

8X02A PACKAGE AND PIN DESIGNATIONS

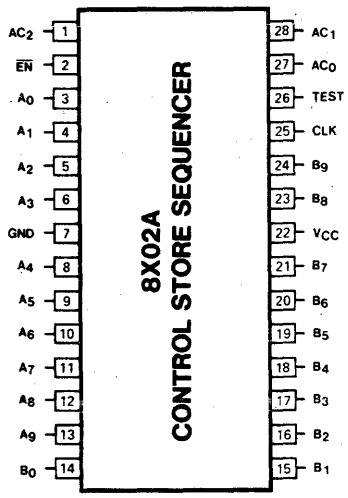

PIN NO.	IDENTIFIER	FUNCTION
1, 28, 27	AC_2-AC_0	Inputs used to select any one of eight Address Control Functions—see Table 1.
2	$\overline{EN}$	Enable three-state address outputs (A_0-A_9); active-low input.
3-6, 8-13	A_0-A_9	Three-state address outputs used to specify microprogram address; (A_0 = LSB, A_9 = MSB).
7	GND	Ground.
14-21, 23, 24	B_0-B_9	Branch address inputs: (B_0 = LSB, B_9 = MSB).
22	V_{CC}	Supply voltage.
25	CLK	Clock input (positive edge used for all triggering).
26	TEST	Active-high condition input used to determine conditional skips, branches, subroutine calls, and loop termination.

BLOCK DIAGRAM

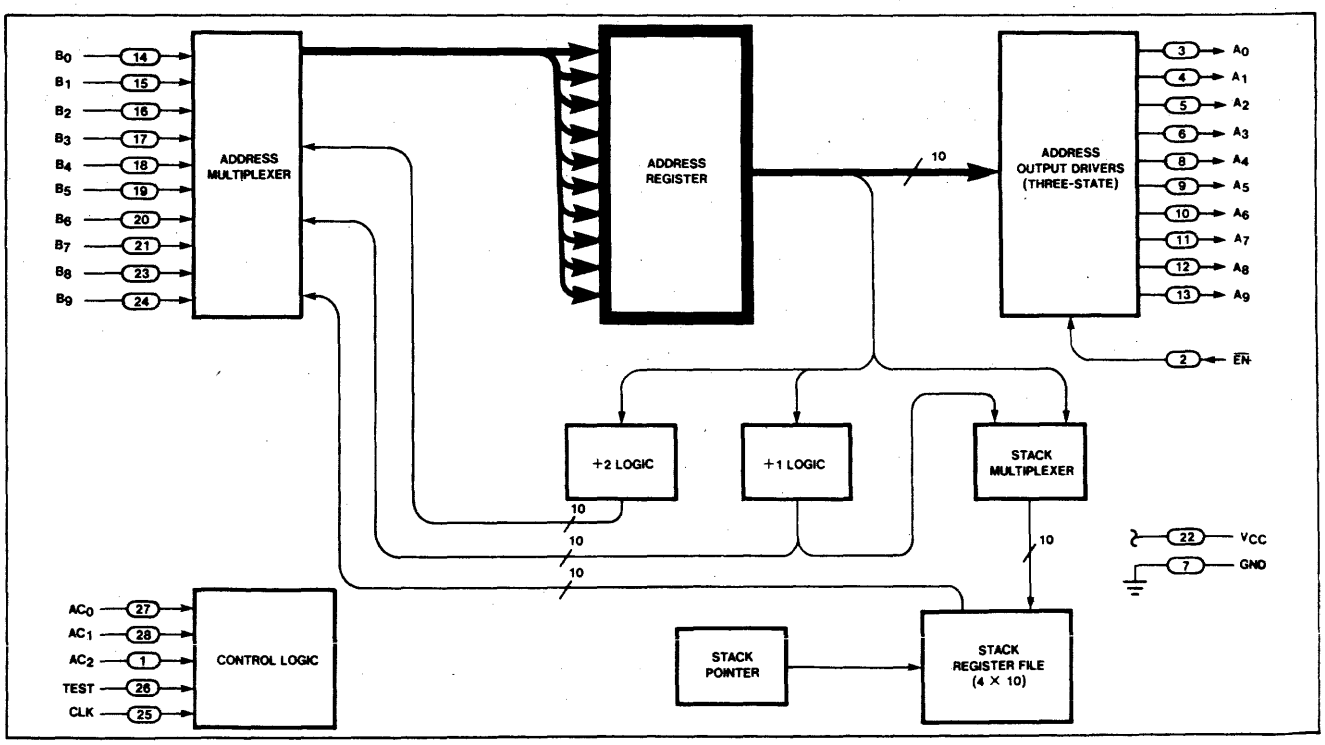

© IC MASTER 1984

ABSOLUTE MAXIMUM RATINGS

PARAMETER		RATING	UNIT
V_{CC}	Power supply voltage	+7	Vdc
V_{IN}	Input Voltage	+5.5	Vdc
V_O	Off-State output voltage	+5.5	Vdc
T_{STG}	Storage temperature range	−65 to +150	°C

DC ELECTRICAL CHARACTERISTICS

CONDITIONS:

Commercial—

V_{CC} = 5.0V (±5%)

0°C ≤ T_A ≤ 70°C

PARAMETER	DESCRIPTION	TEST CONDITIONS	LIMITS MIN	LIMITS TYP[1]	LIMITS MAX	UNITS
V_{IH}	High Level Input Voltage	V_{CC} = Min	2			V
V_{IL}	Low Level Input Voltage	V_{CC} = Min			0.8	V
V_{IC}	Input Clamp Voltage	V_{CC} = Min; I_I = −18 mA			−1.5	V
V_{OH}	High Level Output Voltage	V_{CC} = Min; I_{OH} = −2.6 mA	2.4	3.4		V
V_{OL}	Low Level Output Voltage	V_{CC} = Min; I_{OL} = 8 mA		0.42	0.5	V
I_I	Input Current at Maximum Input Voltage	V_{CC}= Max; V_I = 5.5V		1	100	μA
I_{IH}	High Level Input Current: AC_2-AC_0, TEST, CLK	V_{CC} = Max; V_{IH} = 2.7V		<0.1	40	μA
	B_9-B_0, $\overline{EN}$			<0.1	20	μA
I_{IL}	Low Level Input Current: AC_2-AC_0, TEST, CLK	V_{CC} = Max; V_{IL} = 0.4V		−24	−800	μA
	B_9-B_0, $\overline{EN}$			−12	−400	μA
I_{OS}	Short Circuit Output Current[2]	V_{CC} = Max	−15	−60	−100	mA
I_{OZH}	High-Z State Output Current—High Level	V_{CC} = Max; V_{OH} = 2.7V			20	μA
I_{OZL}	High-Z State Output Current—Low Level	V_{CC} = Max; V_{OL} = 0.4V			−20	μA
I_{CC}	Supply Current	V_{CC} = Max		170	250	mA

NOTES:

1. Typical limits are: V_{CC} = 5.0V and T_A = 25°C.
2. For purposes of testing, not more than one output should be shorted at a time.

© IC MASTER 1984

AC ELECTRICAL CHARACTERISTICS

CONDITIONS:

Commercial—
V_{CC} = 5.0V (±5%)
0°C ≤ T_A ≤ 70°C

Loading—
See TEST LOADING CIRCUIT

PARAMETERS[1]	REFERENCES		LIMITS[4]			UNITS
	FROM	TO	MIN	TYP[2]	MAX	
Pulse Width:						
t_{CW} — Clock cycle time	↑CLK	↑CLK	80			ns
t_{PWH} — Clock high	↑CLK	↓CLK	35	24		ns
t_{PWL} — Clock low	↓CLK	↑CLK	15	9		ns
Propagation Delay:						
t_{PLZ} — Low to High-Z	↑$\overline{EN}$	A_0-A_9		14	20	ns
t_{PHZ} — High to High-Z	↑$\overline{EN}$	A_0-A_9		35	42	ns
t_{PZL} — High-Z to Low	↓$\overline{EN}$	A_0-A_9		10	20	ns
t_{PZH} — High-Z to High	↓$\overline{EN}$	A_0-A_9		20	30	ns
t_{PHL} — High to Low	↑CLK	↓A_0-A_9		25	45	ns
t_{PLH} — Low to High	↑CLK	↑A_0-A_9		25	45	ns
t_{HA} — Address output hold time[3]	↑CLK	A_0-A_9	13			ns
Set-Up/Hold Times:						
t_{SF} — Function set-up time	AC_0-AC_2	↑CLK	20	18		ns
t_{SK} — Branch set-up time	B_0-B_9	↑CLK	15	7		ns
t_{SI} — Test set-up time	TEST	↑CLK	20	15		ns
t_{HF} — Function hold time	↑CLK	AC_0-AC_2	20	2		ns
t_{HK} — Branch hold time	↑CLK	B_0-B_9	15	9		ns
t_{HI} — Test hold time	↑CLK	TEST	12	−2		ns

NOTES

1. Parameter definitions are illustrated in the Timing Diagrams—See Figure 2.
2. Typical limits are: V_{CC} = 5.0V and T_A = 25°C.
3. t_{HA} is the minimum time the current address outputs remain stable before changing. This delay may be used to provide some of the hold times required for the AC, B, and TEST inputs, if these inputs are determined by the microprogram memory addressed by the 8X02A.
4. This data supersedes the November, 1980 edition of this data sheet.

© IC MASTER 1984

CRC GENERATOR/CHECKER 9401

PRODUCT DESCRIPTION

The 9401 CRC Generator/Checker provides error-correction capabilities for digital systems that handle serial data.

The serial data stream is divided by a selected polynomial; the remainder resulting from this algebraic process is transmitted at the end of the data stream as a Cyclic Redundancy Check Character (CRCC). At the receiving end, the same calculation is performed on the data. If the received message is error-free, the calculated remainder should satisfy a predetermined pattern which, in most cases, is zero.

Eight polynomials are provided and any of these can be selected via a 3-bit control bus. Popular polynomials, such as CRC-16 and CCITT are implemented and the one selected can be programmed to start with all zeroes or all ones. Right justification for polynomials of degree less than 16 is automatic.

FUNCTIONAL OPERATION

The CRC Generator/Checker circuit provides a means of detecting errors in a serial data communications environment. A binary message can be interpreted as a binary polynomial H(x). This polynomial can be divided by a generator polynomial P(x) such that H(x) = P(x) Q(x) + R(x) whereby Q(x) is the quotient and R(x) is the remainder. During transmission, the remainder is appended to the end of the message as check bits. For a given message, a unique remainder is generated.

Each polynomial can be selected via control inputs S_0, S_1 and S_2. To generate the check bits, the data stream is entered via the Data (D) input, using the high to low transition of the Clock (CP) input. This data is gated with the most significant output (Q) of the shift register which, in turn, controls the exclusive OR gates. The Check Word Enable (CWE) must be held high while the data is being entered. After the last data bit is entered, the CWE is brought low and the check bits are shifted out of the register and appended to the data bits using external gating.

To check an incoming message for errors, both the data and check bits are entered through the "D" input with the CWE input held high. If no error is detected during the data transmission, all bits of the internal register are low and the ERror output is also low; if an error is detected, it is reflected by the bit pattern and the ERror output is high. The ERror output status remains valid until the next high-to-low transition of CP or until initialized by the preset ($\overline{P}$) or reset (MR) functions. The PME line must be high if the ERror output is used to indicate an all-zero result.

A high level applied to the Master Reset (MR) input asynchronously clears the shift register. A low level applied to the Preset (P) input asynchronously sets all bits to the appropriate state if the control-code inputs (S_0, S_1, and S_2) specify a 16-bit polynomial. In the case of check polynomials that are 8-or-12 bits in length, only the most significant 8-12 bits of the shift register are set; all remaining bits are cleared.

DESIGN FEATURES

- **TTK inputs/outputs**
- **12MHz (Max) data rate**
- **Separate preset/reset controls**
- **Automatic right justification**
- **V_{CC} = 5V**
- **14-Pin DIP**

PACKAGE/PIN DESIGNATOR

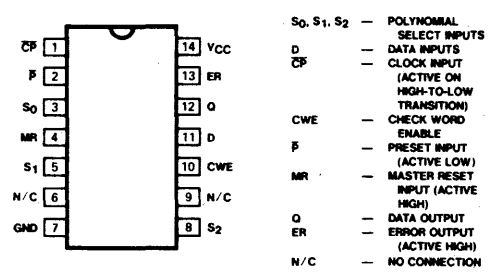

BLOCK DIAGRAM

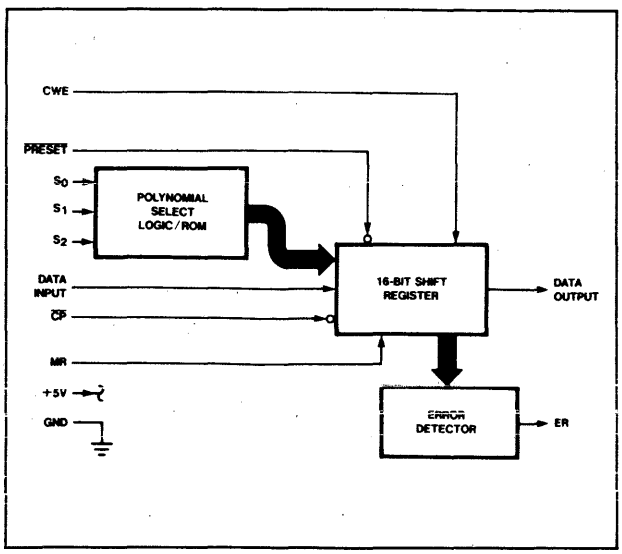

© IC MASTER 1984

TEST CIRCUIT

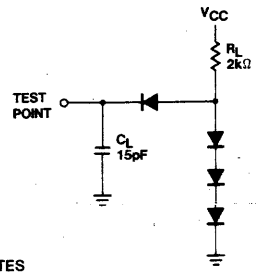

NOTES
1. Diodes are 1N3064 or equivalent.
2. C_L includes jig and probe capacitance.

INPUT/OUTPUT STRUCTURES

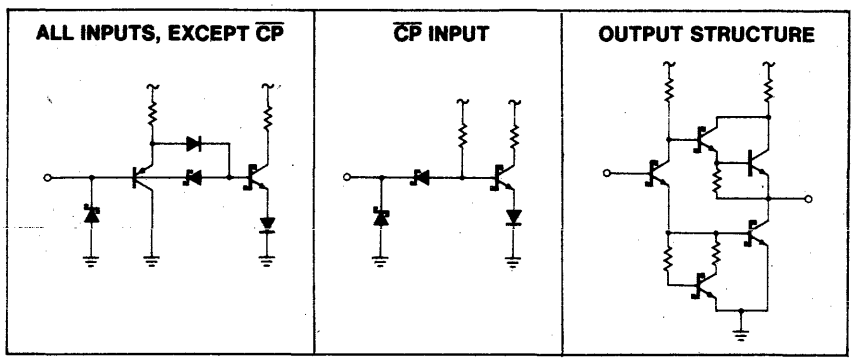

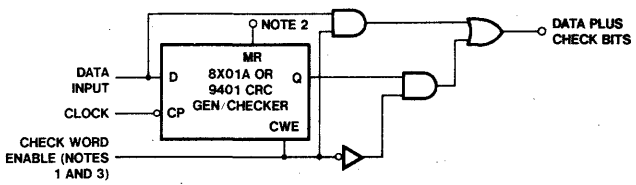

NOTES
1. Check Word Enable is HIGH while data is being clocked; it is LOW during transmission of check bits.
2. The 8X01A (or 9401) must be RESET or PRESET before each computation.
3. CRC check bits are generated and appended to data bits.

Figure 1. Check Word Generation

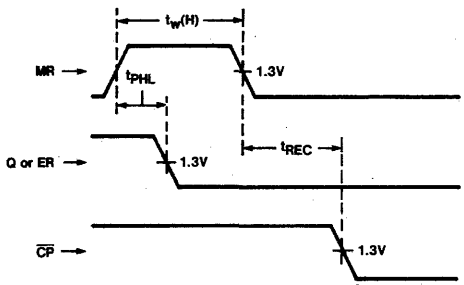

Figure 4. Propagation Delay—MR to Q and ER; Recovery Time—MR to $\overline{CP}$

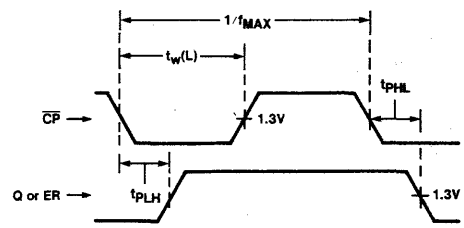

Figure 2. Propagation Delay—$\overline{CP}$ to Q and $\overline{CP}$ to ER

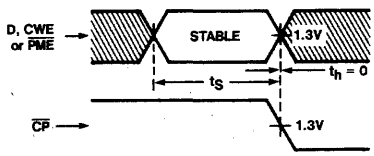

Figure 5. Setup and Hold Times—D to $\overline{CP}$, CWE to $\overline{CP}$, and $\overline{PME}$ to $\overline{CP}$

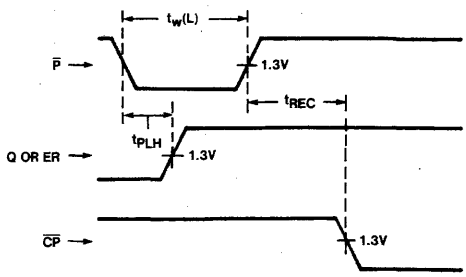

Figure 3. Propagation Delay—$\overline{P}$ to Q and ER; Recovery Time—$\overline{P}$ to $\overline{CP}$

© IC MASTER 1984

AC ELECTRICAL CHARACTERISTICS FOR 8X01A V_{CC} = 5V, T_A = +25°C

PARAMETER	DESCRIPTION	FROM	TO	TEST CONDITIONS	LIMITS (COMMERCIAL)			LIMITS (MILITARY)			UNIT
					Min	Typ	Max	Min	Typ	Max	
f_{max}	Max clock freq				12			12			MHz
PULSE WIDTHS:											
t_w-$\overline{CP}$(L)	Clock low			See figure 2	35			35			ns
t_w-$\overline{P}$(L)	Preset low			See figure 3	35			35			ns
t_w-MR(H)	Master reset high			See figure 4	35			35			ns
SETUP/HOLD TIMES:											
t_s-D	Setup time	Data	Clock		55			55			ns
t_s-CWE	Setup time	CWE	Clock	See figure 5	55			55			ns
t_h-D & CWE	Hold time	Data & CWE	Clock		0			0			ns
PROPAGATION DELAY:											
$t_{PLH,PHL}$	Low-to-High and High-to-Low	$\overline{PRESET}$	Data output	See figures 1, 2, & 3			55			55	ns
$t_{PLH,PHL}$	Low-to-High and High-to-Low	Master reset	Data output	See figure 4			55			55	ns
$t_{PLH,PHL}$	Low-to-High and High-to-Low	$\overline{PRESET}$	Error output	See figure 3			55			55	ns
$t_{PLH,PHL}$	Low-to-High and High-to-Low	Master reset	Error output	See figure 4			55			55	ns
$t_{PLH,PHL}$	Low-to-High and High-to-Low	$\overline{CP}$	Data output	See figure 2			55			55	ns
$t_{PLH,PHL}$	Low-to-High and High-to-Low	$\overline{CP}$	Error output	See figure 2			55			55	ns
t_{REC}	Recovery time	Preset, MR	Clock	See fig. 3 & 4	35			35			ns

AC ELECTRICAL CHARACTERISTICS FOR 9401 V_{CC} = 5V, T_A = +25°C

PARAMETER	DESCRIPTION	FROM	TO	TEST CONDITIONS	LIMITS (COMMERCIAL)			LIMITS (MILITARY)			UNIT
					Min	Typ	Max	Min	Typ	Max	
f_{max}	Max clock freq				12	20		12	20		MHz
PULSE WIDTHS:											
t_w-$\overline{CP}$(L)	Clock low			See figure 2	35			35			ns
t_w-$\overline{P}$(L)	Preset low			See figure 3	40	30		40	30		ns
t_w-MR(H)	Master reset high			See figure 4	35	25		35	25		ns
SETUP/HOLD TIMES:											
t_s-D	Setup time	Data	Clock		55	35		55	35		ns
t_s-CWE	Setup time	CWE	Clock	See figure 5	55	35		55	35		ns
t_h-D & CWE	Hold time	Data & CWE	Clock		0	−8		0	−8		ns
PROPAGATION DELAY:											
$t_{PLH,PHL}$	Low-to-High and High-to-Low	$\overline{PRESET}$	Data output	See figures 1, 2, & 3		40	60		40	60	ns
$t_{PLH,PHL}$	Low-to-High and High-to-Low	Master reset	Data output	See figure 4		30	55		30	55	ns
$t_{PLH,PHL}$	Low-to-High and High-to-Low	$\overline{PRESET}$	Error output	See figure 3		40	60		40	60	ns
$t_{PLH,PHL}$	Low-to-High and High-to-Low	Master reset	Error output	See figure 4		40	60		40	60	ns
$t_{PLH,PHL}$	Low-to-High and High-to-Low	$\overline{CP}$	Data output	See figure 2		30	55		30	55	ns
$t_{PLH,PHL}$	Low-to-High and High-to-Low	$\overline{CP}$	Error output	See figure 2		40	60		40	60	ns
t_{REC}	Recovery time	Preset, MR	Clock	See fig. 3 & 4	35	25		35	25		ns

© IC MASTER 1984

CRC GENERATOR/CHECKER 9401

TRUTH TABLE

SELECT CODE			POLYNOMIAL	REMARKS
S_2	S_1	S_0		
L	L	L	$x^{16} + x^{15} + x^2 + 1$	CRC-16
L	L	H	$x^{16} + x^{14} + x + 1$	CRC-16 REVERSE
L	H	L	$x^{16} + x^{15} + x^{13} + x^7 + x^4 + x^2 + x^1 + 1$	
L	H	H	$x^{12} + x^{11} + x^3 + x^2 + x + 1$	CRC-12
H	L	L	$x^8 + x^7 + x^5 + x^4 + x + 1$	
H	L	H	$x^8 + 1$	LRC-8
H	H	L	$x^{16} + x^{12} + x^5 + 1$	CRC-CCITT
H	H	H	$x^{16} + x^{11} + x^4 + 1$	CRC-CCITT REVERSE

RECOMMENDED OPERATING CONDITIONS

PARAMETER		LIMITS			UNIT
		Min	Typ	Max	
V_{CC}	Supply voltage	4.75	5.0	5.25	V
$\overline{CP}$	Clock input	0		12	MHz

DC ELECTRICAL CHARACTERISTICS FOR 8X01A

PARAMETER	DESCRIPTION	TEST CONDITIONS[1]	LIMITS (COMMERCIAL)			LIMITS (MILITARY)			UNIT
			Min	Typ	Max	Min	Typ	Max	
V_{IH}	Input high voltage		2.0			2.0			V
V_{IL}	Input low voltage				0.8			0.7	V
V_{IC}	Input clamp diode voltage	V_{CC} = Min, I_{IN} = −18mA		−0.9	−1.5		−0.9	−1.5	V
V_{OH}	Output high voltage	V_{CC} = Min, I_{OH} = −400μA	2.7	3.4		2.4	3.4		V
V_{OL}	Output low voltage	V_{CC} = Min, I_{OL} = 4.0mA		0.35	0.4		0.35	0.4	V
		V_{CC} = Min, I_{OL} = 8.0mA		0.45	0.5		—	—	V
I_{IL}	Input low current	V_{CC} = Max, V_{IN} = 0.4V		−0.22	−0.36		−0.22	−0.36	mA
I_{IH}	Input high current	V_{CC} = Max, V_{IN} = 2.7V			20			20	μA
I_{IH}	Max input current	V_{CC} = Max, V_{IN} = 7V			0.1			0.1	mA
I_{OS}	Output short circuit current	V_{CC} = Max, V_{OUT} = 0V[2]	−10		−42	−10		−42	mA
I_{CC}	Supply current	V_{CC} = Max, inputs open		60	110		60	110	mA

DC ELECTRICAL CHARACTERISTICS FOR 9401

PARAMETER	DESCRIPTION	TEST CONDITIONS[1]	LIMITS (COMMERCIAL)			LIMITS (MILITARY)			UNIT
			Min	Typ	Max	Min	Typ	Max	
V_{IH}	Input high voltage	Guar. input high voltage	2.0			2.0			V
V_{IL}	Input low voltage	Guar. input low voltage			0.8			0.7	V
V_{IC}	Input clamp diode voltage	V_{CC} = Min I_{IN} = −18mA		−0.9	−1.5		−0.9	−1.5	V
V_{OH}	Output high voltage	V_{CC} = Min, I_{OH} = −400μA	2.4	3.4		2.4	3.4		V
V_{OL}	Output low voltage	V_{CC} = Min, I_{OL} = 4.0mA		0.35	0.4		0.35	0.4	V
		V_{CC} = Min, I_{OL} = 8.0mA		0.45	0.5		—	—	V
I_{IL}	Input low current	V_{CC} = Max, V_{IN} = 0.4V		−0.22	−0.36		−0.22	−0.36	mA
I_{IH}	Input high current	V_{CC} = Max, V_{IN} = 2.7V		1.0	40		1.0	40	μA
		V_{CC} = Max, V_{IN} = 5.5V			1.0			1.0	mA
I_{OS}	Output short circuit current[2]	V_{CC} = Max, V_{OUT} = 0V	−15		−100	−15		−100	mA
I_{CC}	Supply current	V_{CC} = Max, inputs open		70	110		70	110	mA

NOTES: 1. Commercial—V_{CC}(min) = 4.75V; V_{CC}(max) = 5.25V. Military—V_{CC}(min) = 4.50V; V_{CC}(max) = 5.50V. 2. No more than one output should be shorted at a time.

© IC MASTER 1984

64-BIT FIFO BUFFER MEMORY (16×4) 9403

Manufacturer reserves the right to make design and process changes and improvements.

PRODUCT DESCRIPTION

The 9403 is an expandable fall-through type First-In First-Out (FIFO) Buffer Memory that is optimized for high-speed disc/tape controllers and communication-buffer applications. In multiples of four, the device can be expanded to any number of bits and subsequently, to any number of words. Serial or parallel data can be asynchronously entered or retrieved which makes the 9403 *the* cost-effective solution for implementing buffer memories.

FEATURES

- **10MHz Serial or Parallel Data Rate**
- **Serial or Parallel Input and Output**
- **Expandable Without External Logic**
- **Three-State Outputs**
- **Fully TTL-Compatible**
- **Slim (0.4 in.) 24-Pin DIP**

PIN DESIGNATIONS & DESCRIPTIONS

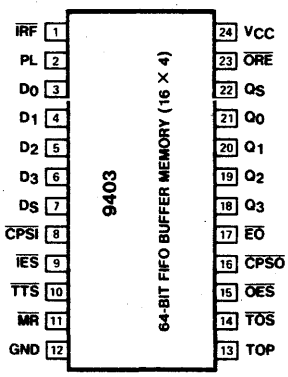

MNEMONIC AND FUNCTION		DESCRIPTION
$\overline{IRF}$	= Input register full output	Low when input register is full
PL	= Parallel load input	High on PL enables D_0-D_3; not edge-triggered, 1's catching
D_0-D_3	= Parallel data input	—
D_S	= Serial data input	—
$\overline{CPSI}$	= Serial input clock	Edge-triggered and activates on falling edge
$\overline{IES}$	= Serial input enable	When low, serial input is enabled
$\overline{TTS}$	= Transfer to stack input	When low, initiates fall-through
$\overline{MR}$	= Master Reset	Active low
TOP	= Transfer out parallel input	When high and $\overline{TOS}$ is low, enables word transfer from stack to output register—not edge-triggered

MNEMONIC AND FUNCTION		DESCRIPTION
$\overline{TOS}$	= Transfer out serial input	When low and TOP is high, enables word transfer from stack to output register—not edge-triggered
$\overline{OES}$	= Serial output enable input	When low, enables serial output
$\overline{CPSO}$	= Serial output clock input	Edge-triggered and activates on falling edge
$\overline{EO}$	= Output enable	Active low
Q_0-Q_3	= Parallel data output	
Q_S	= Serial data output	
$\overline{ORE}$	= Output register empty output	When high, output register contains valid data
GND	= Ground	—
V_{CC}	= Supply voltage	+5 volts

FUNCTIONAL DESCRIPTION

As shown in Figure 1, the 9403 consists of three parts which operate asynchronously and are virtually independent. These parts are:

- **Input Register**—with serial and parallel data inputs and control signals that permit easy expansion and a handshake interface.
- **FIFO Stack**—4-bit wide, 14-word deep fall-through type with self-contained control logic.
- **Output Register**—with serial and parallel data outputs and control signals that permit easy expansion and a handshake interface.

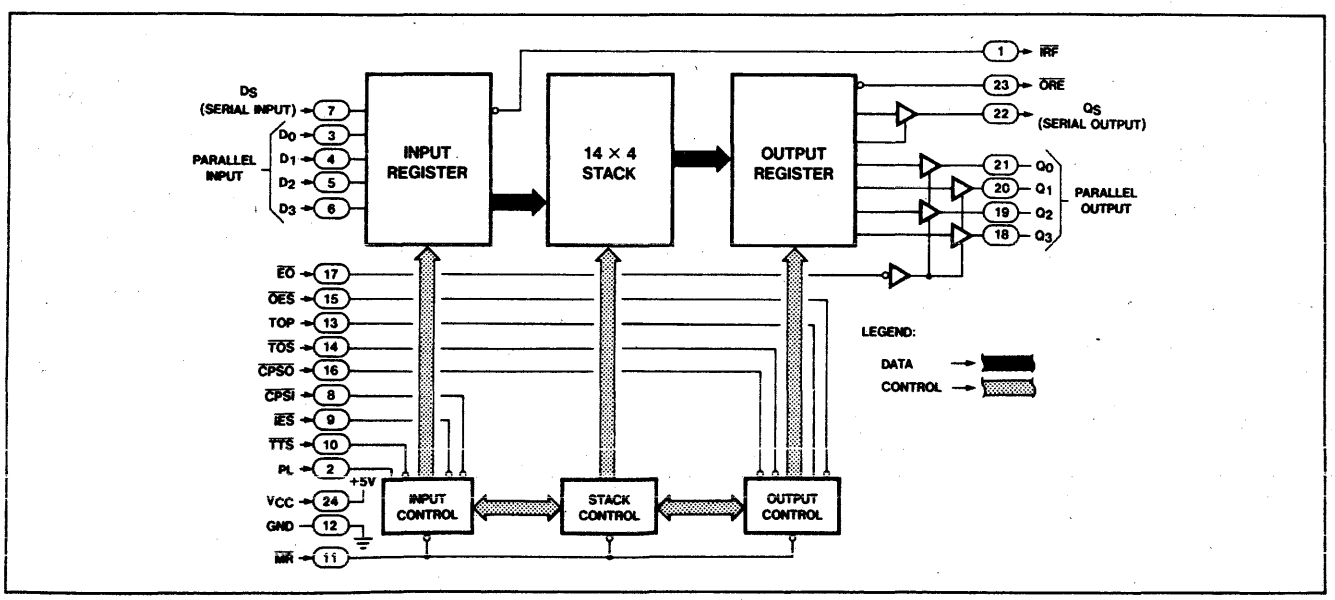

Figure 1. Simplified Block Diagram of 9403 Buffer Memory

© IC MASTER 1984

64-BIT FIFO BUFFER MEMORY (16×4)

ABSOLUTE MAXIMUM RATINGS

PARAMETER		RATING	UNIT
V_{CC}	Power supply voltage	+7	Vdc
V_{IN}	Input voltage	+5.5	Vdc
V_O	Off-state output voltage	+5.5	Vdc
T_A	Operating temperature range	0 to +70	°C
T_{stg}	Storage temperature range	−65 to +150	°C

DC ELECTRICAL CHARACTERISTICS Over operating temperature range unless otherwise noted

PARAMETER		TEST CONDITIONS[1,2]	LIMITS Min	LIMITS Typ	LIMITS Max	UNIT
V_{IH}	Input high voltage	Guaranteed input high voltage	2.0			V
V_{IL}	Input low voltage	Guaranteed input low voltage			0.8	V
V_{CD}	Input Clamp Diode Voltage	V_{CC} = Min, I_{IN} = −18mA		−0.9	−1.5	V
V_{OH}	Output high voltage, $\overline{ORE}$, $\overline{IRF}$	V_{CC} = Min, I_{OH} = −400μA	2.4	3.4		V
V_{OH}	Output high voltage, Q_0-Q_3, Q_S	I_{OH} = −5.7mA, V_{CC} = Min	2.4	3.1		V
V_{OL}	Output low voltage, Q_0-Q_3; Q_S	V_{CC} = Min, I_{OL} = 16mA		0.35	0.5	V
V_{OL}	Output low voltage, $\overline{ORE}$, $\overline{IRF}$	V_{CC} = Min, I_{OL} = 8.0mA		0.35	0.5	V
I_{OZH}	Output off current high, Q_0-Q_3, Q_S	V_{CC} = Max, V_{OUT} = 2.4V, V_E = 2V			100	μA
I_{OZL}	Output off current low, Q_0-Q_3, Q_S	V_{CC} = Max, V_{OUT} = 0.5V, V_E = 2V			−100	μA
I_{IH}	Input high current	V_{CC} = Max, V_{IN} = 2.7V		1.0	40	μA
		V_{CC} = Max, V_{IN} = 5.5V			1.0	mA
I_{IL}	Input low current, all except $\overline{OES}$ & $\overline{IES}$	V_{CC} = Max, V_{IN} = 0.4V			−0.36 −0.96	mA
I_{OS}	Output short circuit current, Q_0-Q_3, Q_S $\overline{ORE}$, $\overline{OES}$	V_{CC} = Max, V_{OUT} = 0, (Note 3)	−30		−130	mA
I_{CC}	Supply Current	V_{CC} Max, Inputs open		115	170	mA

NOTES
1. Operating temperature ranges are guaranteed after terminal equilibrium has been reached.
2. All voltages measured with respect to ground terminal.
3. No more than one output should be shorted at a time.

AC ELECTRICAL CHARACTERISTICS V_{CC} = 5.0V, C_L = 15pF, T_A = 25° C

PARAMETER		FROM INPUT	TO OUTPUT	TEST CONDITIONS[1,2,3]	LIMITS Min	LIMITS Typ	LIMITS Max	UNIT
FALL-THROUGH TIME: t_{DFT}		Positive going PL	Q_0-Q_3	$\overline{TTS}$ connected to $\overline{IRF}$, $\overline{TOS}$ connected to $\overline{ORE}$, $\overline{IES}$, $\overline{OES}$, $\overline{EO}$, $\overline{CPSO}$ low, TOP high		450	600	ns
PROPAGATION DELAY:								ns
t_{PLH}	Low-to-high	Negative going $\overline{TTS}$	$\overline{IRF}$	Stack not full, PL low		48	64	
t_{PHL}	High-to-low	Negative going $\overline{CPSI}$	$\overline{IRF}$			18	25	
t_{PLH}	Low-to-high	Negative going $\overline{CPSO}$	Q_S	Serial output $\overline{OES}$ low, TOP high		30	40	ns
t_{PHL}	High-to-low					17	28	
t_{PHL}	High-to-low	Negative going $\overline{CPSO}$	$\overline{ORE}$			32	42	ns
t_{PLH}	Low-to-high	Positive going TOP	Q_0-Q_3	$\overline{EO}$, $\overline{CPSO}$ low		40	56	ns
t_{PHL}	High-to-low					31	45	
t_{PLH}	Low-to-high	Positive going TOP	$\overline{ORE}$	Parallel output, $\overline{EO}$, $\overline{CPSO}$ low		51	68	ns
t_{PHL}	High-to-low	Negative going TOP	$\overline{ORE}$			40	54	
t_{PLH}	Low-to-high	Negative going $\overline{TOS}$	Positive going $\overline{ORE}$	Data in stack, TOP high,		41	56	ns
t_{PHL}	High-to-low	Positive going PL	Negative going $\overline{IRF}$	Stack not full		20	33	ns
t_{PLH}	Low-to-high	Negative going PL	Positive going $\overline{IRF}$			33	46	ns
t_{PLH}	Low-to-high	Positive going $\overline{OES}$	$\overline{ORE}$			26	44	
t_{PLH}	Low-to-high	Positive going $\overline{IES}$	Positive going $\overline{IRF}$			31	40	
ENABLE DELAY:								ns
t_{PZH}	High	$\overline{EO}$	Q_0-Q_3	Out of high impedance state		9	14	
t_{PZL}	Low						20	
t_{PZL}	Low	Negative going $\overline{OES}$	Q_S			13	25	ns
t_{PZH}	High						20	

© IC MASTER 1984

AC ELECTRICAL CHARACTERISTICS V_{CC}= 5.0V, C_L= 15 pF, T_A= 25°C (Cont'd)

PARAMETER	FROM	TO	TEST CONDITIONS[1,2,3]	LIMITS Min	LIMITS Typ	LIMITS Max	UNIT
DISABLE DELAY:							ns
t_{PLZ} Low t_{PHZ} High	$\overline{EO}$	Q_0-Q_3	Into high impedance state		7	14	
t_{PLZ} Low t_{PHZ} High	Negative going $\overline{OES}$	Q_S			7	14	ns
APPEARANCE TIME:							ns
t_{AP} Parallel t_{AS} Serial	$\overline{ORE}$ $\overline{ORE}$	Q_0-Q_3 Q_S	Time elapsed between $\overline{ORE}$ going going high and valid data appearing at output, negative number indicates data available before $\overline{ORE}$ goes high		−12 6	−5 10	
PULSE WIDTH							ns
t_{PWL} $\overline{CPSI}$ low t_{PWH} $\overline{CPSI}$ high			Stack not full, PL low	20 33	11 19		
t_{PWL} TOP low t_{PWH} TOP high			$\overline{CPSO}$ low, data available in stack	30 26	17 13		ns
t_{PWL} $\overline{CPSO}$ low t_{PWH} $\overline{CPSO}$ high			TOP high, data in stack,	30 32	16 18		ns
t_{PWH} PL high			Stack not full	40	29		ns
t_{PWL} $\overline{TTS}$ low (serial or parallel mode)			Stack not full	20	9		ns
t_{PWL} $\overline{MR}$ low				25	13		ns
SETUP and HOLD TIME:							ns
t_s Setup time t_h Hold time	D_S D_S	Negative $\overline{CPSI}$ $\overline{CPSI}$	PL low	28 0	17 −6		
t_s Setup time	Parallel inputs	PL	Length of time parallel inputs must be applied prior to rising edge of PL	0	−22		ns
t_h Hold time	Parallel inputs	PL	Length of time parallel inputs must remain applied after falling edge of PL	2			ns
t_s Setup time (serial or parallel mode	$\overline{TTS}$	$\overline{IRF}$		0	−20		ns
t_s Setup time	Negative going $\overline{ORE}$	Negative going $\overline{TOS}$	TOP high	0	−24		ns
t_s Setup time t_s Setup time	Negative going $\overline{IES}$ Negative $\overline{TTS}$	$\overline{CPSI}$ $\overline{CPSI}$		45 84	23 58		ns
RECOVERY TIME: t_{rec}	$\overline{MR}$	Any input		15	5		ns

Notes:
1. Initialization requires a master reset to occur after power has been applied.
2. $\overline{TTS}$ normally connected to $\overline{IRF}$.
3. If stack is full, $\overline{IRF}$ will stay low.

© IC MASTER 1984

MICROPROGRAM CONTROL UNIT

SN3001

N3001N, N3001I, S3001I

DESCRIPTION

The SN3001 MCU is 1 element of a bipolar microcomputer set. When used with the SN3002, 54/74S182, ROM or PROM memory, a powerful microprogrammed computer can be implemented.

The 3001 MCU controls the fetch sequence of microinstructions from the microprogram memory. Functions performed by the 3001 include:

- Maintenance of microprogram address register
- Selection of next microinstruction address
- Decoding and testing of data supplied via several input buses
- Saving and testing of carry output data from the central processing (CP) array
- Control of carry/shift input data to the CP array
- Control of carry/shift input data to the CP array

FEATURES

- **Schottky TTL process**
- **45ns cycle time (typ.)**
- **Direct addressing of standard bipolar PROM or ROM**
- **512 microinstruction addressability**
- **Advanced organization:**
  - **9-bit microprogram address register and bus organized to address memory by row and column**
  - **4-bit program latch**
  - **2-flag registers**
- **11 address control functions:**
  - **3 jump and test latch functions**
  - **16 way jump and test instructions**
- **8 flag control functions:**
  - **4 flag input functions**
  - **4 flag output functions**

PIN CONFIGURATION

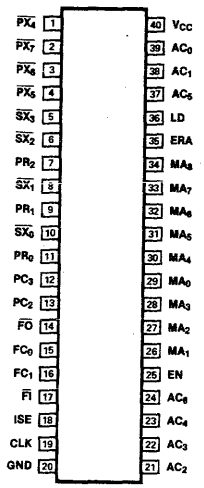

TOP VIEW

BLOCK DIAGRAM

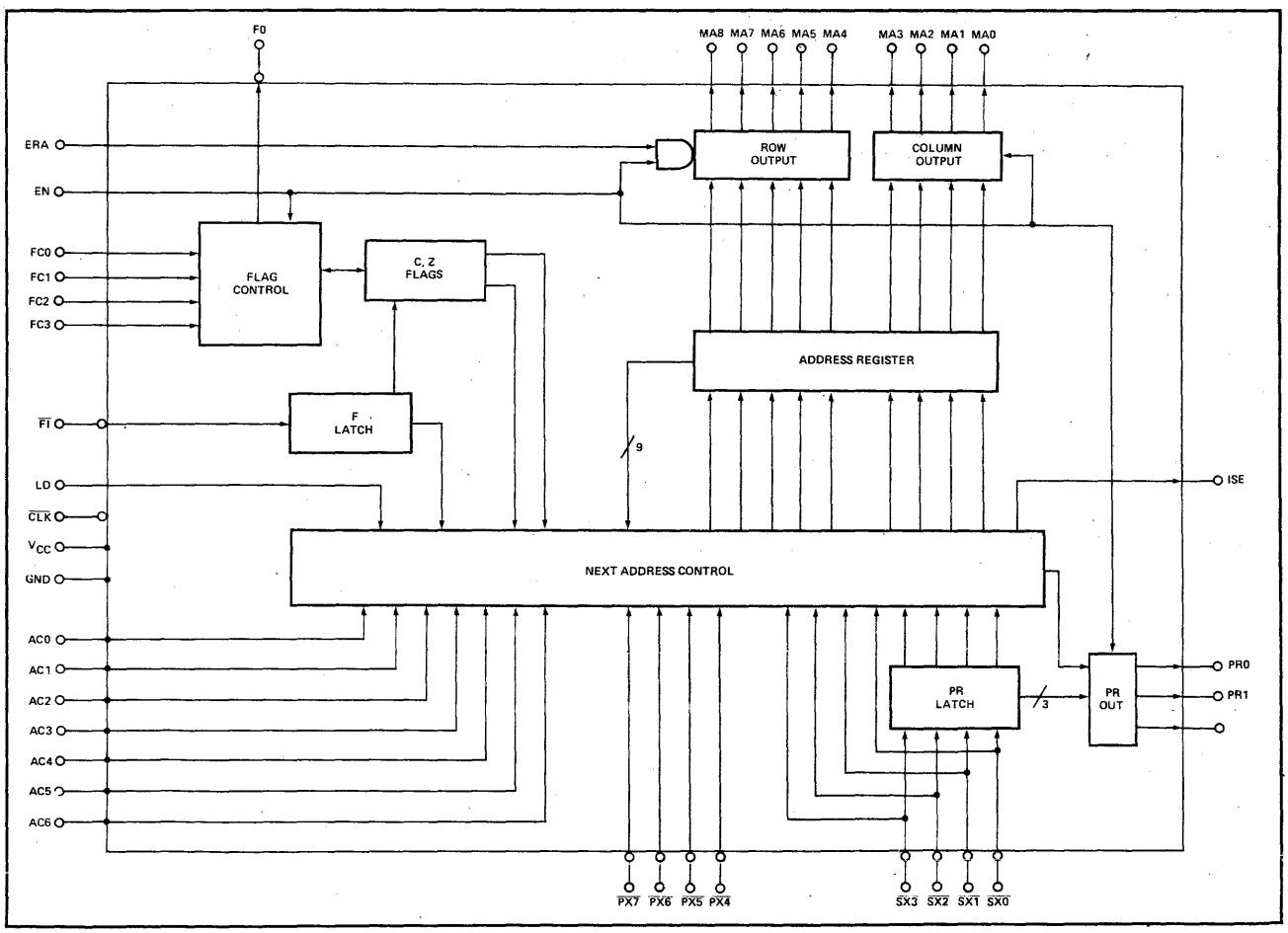

© IC MASTER 1984

AC ELECTRICAL CHARACTERISTICS

N3001 T_A = 0°C to +70°C, V_{CC} = 5.0V, ± 5%
S3001 T_A = -55°C to +125°C, V_{CC} = 5.0V ± 10%

S/N3001-I

	PARAMETER	N3001			S3001			UNIT
		Min	Typ[1]	Max	Min	Typ[1]	Max	
t_{CY}	Cycle Time[2]	60	45		95	45		ns
t_{PW}	Clock Pulse Width	17	10		40	10		ns
	Control and Data Input Set-Up Times:							
t_{SF}	LD, AC_0-AC_6 (Set to "1"/"0")	20	3/14		20	3/14		ns
t_{SK}	FC_0, FC_1	7	5		10	5		ns
t_{SX}	PX_4-PX_7 (Set to "1"/"0")	28	4/13		35	4/13		ns
t_{SI}	FI (Set to "1"/"0")	12	-6/0		15	-6/10		ns
t_{SX}	SX_0-SX_3	15	5		35	5		ns
	Control and Data Input Hold Times:							
t_{HF}	LD, AC_0-AC_6 (Hold to "1"/"0")	4	-3/-14		5	-3/-14		ns
t_{HK}	FC_0, FC_1	4	-5		10	-5		ns
t_{HX}	PX_4-PX_7 (Hold to "1"/"0")	0	-4/-13		25	-4/-13		ns
t_{HI}	FI (Hold to "1"/"0")	16	6.5/0		22	6.5/0		ns
t_{HX}	SX_0-SX_3	0	-5		25	-5		ns
t_{CO}	Propagation Delay from Clock Input (CLK) to Outputs (mA_0-mA_8, FO) (tPHL/tPLH)		17/24	36	10	17/24	45	ns
t_{KO}	Propagation Delay from Control Inputs FC_2 and FC_3 to Flag Out (FO)		13	24		13	50	ns
t_{FO}	Propagation Delay from Control Inputs AC_0-AC_6 to Latch Outputs (PR_0-PR_2)		21	32		21	50	ns
t_{EO}	Propagation Delay from Enable Inputs EN and ERA to Outputs (mA_0-mA_8, FO, PR_0-PR_2)		17	26		17	35	ns
t_{FI}	Propagation Delay from Control Inputs AC_0-AC_6 to Interrupt Strobe Enable Output (ISE)		20	32		20	40	ns

NOTE

1. Typical values are for TA = 25°C and 5.0 supply voltage.
2. S3001: tCY = tWP + tSF + tCO

© IC MASTER 1984

CENTRAL PROCESSING ELEMENT

SN3002

S3002I, N3002F, N3002N

DESCRIPTION

The N3002 Central Processing Element (CPE) is one part of a bipolar microcomputer set. The N3002 is organized as a 2-bit slice and performs the logical and arithmetic functions required by microinstructions. A system with any number of bits in a data word can be implemented by using multiple N3002s, the N3001 microcomputer control unit, the N74S182 carry look-ahead unit and ROM or PROM memory.

FEATURES

- **45ns cycle time (typ)**
- **Easy expansion to multiple of 2 bits**
- **11 general purpose registers**
- **Full function accumulator**
- **Useful functions include:**
  - **2's complement arithmetic**
  - **Logical AND, OR, NOT, exclusive-NOR**
  - **Increment, decrement**
  - **Shift left/shift right**
  - **Bit testing and zero detection**
  - **Carry look-ahead generation**
  - **Masking via K-bus**
  - **Conditioned clocking allowing non-destructive testing of data in accumulator and scratchpad**
- **3 input buses**
- **2 output buses**
- **Control bus**

FUNCTION TRUTH TABLE

FUNCTION GROUP	F_6	F_5	F_4
0	0	0	0
1	0	0	1
2	0	1	0
3	0	1	1
4	1	0	0
5	1	0	1
6	1	1	0
7	1	1	1

REGISTER GROUP	REGISTER	F_3	F_2	F_1	F_0
I	R_0	0	0	0	0
	R_1	0	0	0	1
	R_2	0	0	1	0
	R_3	0	0	1	1
	R_4	0	1	0	0
	R_5	0	1	0	1
	R_6	0	1	1	0
	R_7	0	1	1	1
	R_8	1	0	0	0
	R_9	1	0	0	1
	T	1	1	0	0
	AC	1	1	0	1
II	T	1	0	1	0
	AC	1	0	1	1
III	T	1	1	1	0
	AC	1	1	1	1

PIN CONFIGURATION

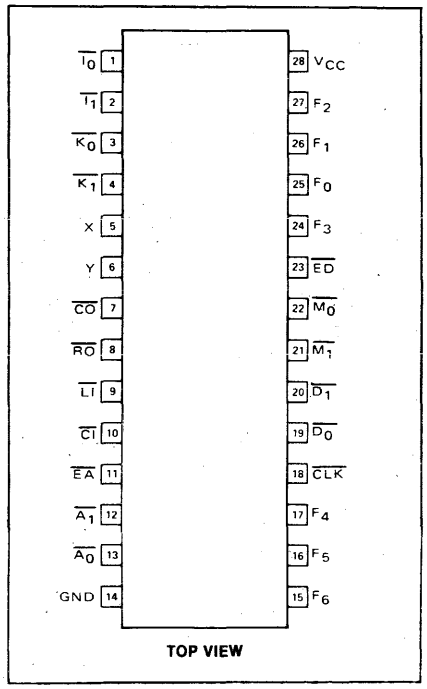

BLOCK DIAGRAM

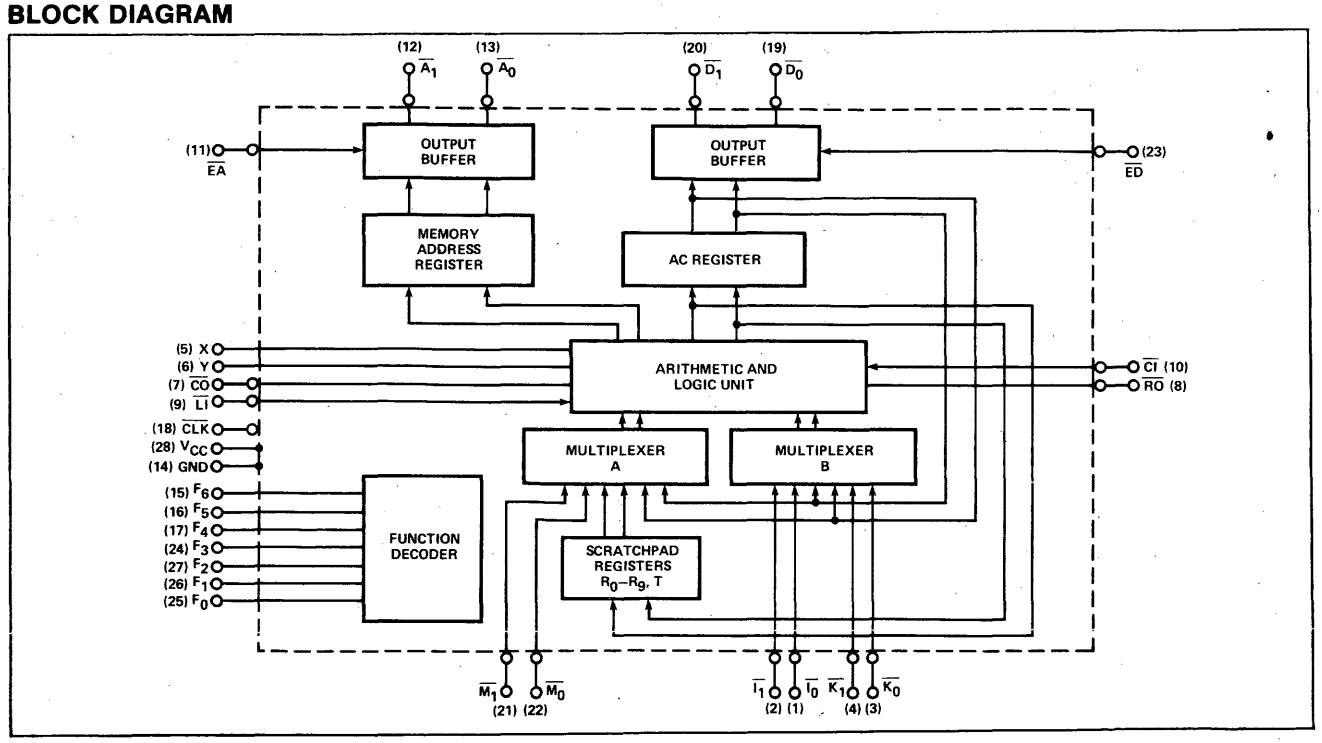

© IC MASTER 1984

AC ELECTRICAL CHARACTERISTICS N3001 = T_A = 0°C to +70°C, V_{CC} = 5V ± 5%
S3001 = T_A = -55°C to +125°C, V_{CC} = 5V ± 10%

PARAMETER	N3002			S3002			UNIT
	Min	Typ*	Max	Min	Typ*	Max	
tCY Clock Cycle Time	70	45		120	45		ns
tWP Clock Pulse Width	17	10		42	10		ns
tFS Function Input Set-Up Time (F_0 through F_6)	48	-23 → 35		70	-23 → 35		ns
Data Set-Up Time:							
tDS I_0, I_1, M_0, M_1, K_0, K_1	40	12 → 29		60	12 → 29		ns
tSS LI, CI	21	0 → 7		30	0 → 7		ns
Data and Function Hold Time:							
tFH F_0 through F_6	4	0		5	0		ns
tDH I_0, I_1, M_0, M_1, K_0, K_1	4	-28 → -11		5	-28 → -11		ns
tSH LI, CI	12	-7 → 0		15	-7 → 0		ns
Propagation Delay to X, Y, RO from:							
tXF Any Function Input		28	52		28	65	ns
tXD Any Data Input		16 → 20	33		16 → 20	65	ns
tXT Trailing Edge of CLK		33	48		33	75	ns
tXL Leading Edge of CLK	13	18 → 40	70	13	18 → 40	90	ns
Propagation Delay to CO from:							
tCL Leading Edge of CLK	16	24 → 44	70		24 → 44	90	ns
tCT Trailing Edge of CLK		30 → 40	56		30 → 40	100	ns
tCF Any Function Input		25 → 35	52		25 → 35	75	ns
tCD Any Data Input		17 → 23	55		17 → 23	65	ns
tCC CI (Ripple Carry)		9 → 13	20		9 → 13	30	ns
Propagation Delay to A_0, A_1, D_0, D_1 from:							
tDL Leading Edge of CLK		17 → 25	40		17 → 25	75	ns
tDE Enable Input ED, EA		10 → 12	20		10 → 12	35	ns

*NOTE
Typical values are for T_A = 25°C and typical supply voltage.

© IC MASTER 1984

SALES OFFICES

SIGNETICS HEADQUARTERS

811 East Argues Avenue
P.O. Box 409
Sunnyvale, California 94086
Phone: (408) 739-7700

ARIZONA
Phoenix
Phone: (602) 265-4444

CALIFORNIA
Canoga Park
Phone: (213) 340-1431

Cupertino
Phone: (408) 725-8100

Inglewood
Phone: (213) 670-1101

Irvine
Phone: (714) 833-8980
(213) 588-3281

San Diego
Phone: (619) 560-0242

COLORADO
Aurora
Phone: (303) 751-5011

CONNECTICUT
Danbury
Phone: (203) 748-3722

FLORIDA
Clearwater
Phone: (813) 796-7086

Ft. Lauderdale
Phone: (305) 486-6300

GEORGIA
Atlanta
Phone: (404) 953-0067

ILLINOIS
Schaumburg
Phone: (312) 843-7805

INDIANA
Kokomo
Phone: (317) 453-6462

KANSAS
Overland Park
Phone: (913) 341-8181

MARYLAND
Glen Burnie
Phone: (301) 787-0220

MASSACHUSETTS
Woburn
Phone: (617) 938-1000

MICHIGAN
Farmington Hills
Phone: (313) 476-1610

MINNESOTA
Edina
Phone: (612) 835-7455

NEW JERSEY
Parsippany
Phone: (201) 334-4405

NEW YORK
Liverpool
Phone: (315) 451-5470

Melville
Phone: (516) 752-0130

Wappingers Falls
Phone: (914) 297-4074

NORTH CAROLINA
Raleigh
Phone: (919) 851-2013

OHIO
Worthington
Phone: (614) 888-7143

PENNSYLVANIA
Horsham
Phone: (215) 443-5500

TENNESSEE
Greeneville
Phone: (615) 639-0251

TEXAS
Austin
Phone: (512) 458-2591

Richardson
Phone: (214) 644-3500

CANADA
SIGNETICS CANADA, LTD.
Etobicoke, Ontario
Phone: (416) 622-9314

Ottawa, Ontario
Tech-Trek, Ltd.
Phone: (613) 230-3927

REPRESENTATIVES

ALABAMA
Huntsville
Electronic Sales, Inc.
Phone: (205) 533-1735

ARIZONA
Thom Luke Sales, Inc.
Phone: (602) 941-1901

CALIFORNIA
Los Gatos
Sierra Technology
Phone: (714) 354-1626

San Diego
Mesa Engineering
Phone: (619) 278-8021

CANADA
Etobicoke
Tech-Trek, Ltd.
Phone: (416) 626-6676

Pointe Claire
Tech-Trek, Ltd.
Phone: (514) 697-3385

CONNECTICUT
Yalesville
Kanan Associates
Phone: (203) 265-2404

ILLINOIS
Schaumburg
Micro-Tex, Inc.
Phone: (312) 885-1131

IOWA
Marion
Rep. Associates Corp.
Phone: (319) 373-0152

KANSAS
Kansas City
B. C. Electronic Sales
Phone: (913) 342-1211

MASSACHUSETTS
Reading
Kanan Associates
Phone: (617) 944-8484

MICHIGAN
Bloomfield Hills
Enco Marketing
Phone: (313) 642-0203

MINNESOTA
Minneapolis
High Technology Sales
Phone: (612) 888-8088

MISSOURI
Bridgeton
B. C. Electronic Sales
Phone: (314) 291-1101

NEW JERSEY
East Hanover
Emtec Sales, Inc.
Phone: (201) 428-0600

NEW MEXICO
Albuquerque
Power Enterprises
Phone: (505) 298-1918

NEW YORK
Ithaca
Bob Dean, Inc.
Phone: (607) 257-1111

Melville
Emtec Sales, Inc.
Phone: (516) 752-1630

OREGON
Hillsboro
Western Technical Sales
Phone: (503) 640-4621

PENNSYLVANIA
Pittsburgh
Covert & Newman
Phone: (412) 531-2002

UTAH
Salt Lake City
Electrodyne
Phone: (801) 486-3801

WASHINGTON
Bellevue
Western Technical Sales
Phone: (206) 641-3900

Spokane
Western Technical Sales
Phone: (509) 922-7600

WISCONSIN
Waukesha
Micro-Tex, Inc.
Phone: (414) 542-5352

DISTRIBUTORS

ALABAMA
Huntsville
Hamilton/Avnet Electronics
Phone: (205) 837-7210
Pioneer Electronics
Phone: (205) 837-9300

ARIZONA
Phoenix
Hamilton/Avnet Electronics
Phone: (602) 231-5100
Wyle Distribution Group
Phone: (602) 249-2232

CALIFORNIA
Chatsworth
Anthem Electronics
Phone: (213) 700-1000
Arrow Electronics
Phone: (213) 701-7500

Costa Mesa
Avnet Electronics
Phone: (714) 754-6111
Hamilton Electro Sales
Phone: (714) 641-4100

Culver City
Hamilton/Avnet Electronics
Phone: (213) 558-2121
Hamilton/Avnet Electronics
Military
Phone: (213) 558-2901

El Segundo
Wyle Distribution Group
Phone: (213) 322-8100

Irvine
Schweber Electronics
Phone: (714) 556-3880
Wyle Distribution Group
Phone: (714) 863-9953

Newport Beach
Arrow Electronics
Phone: (714) 851-8961

Sacramento
Hamilton/Avnet Electronics
Phone: (916) 920-3150

San Diego
Anthem Electronics
Phone: (619) 453-4871
Arrow Electronics
Phone (619) 565-4800
Hamilton/Avnet Electronics
Phone: (619) 571-7510
Wyle Distribution Group
Phone: (619) 565-9171

San Jose
Anthem Electronics Inc.
Phone: (408) 946-8000

Santa Clara
Schweber Electronics
Phone: (408) 748-4700
Wyle Distribution Group
Phone: (408) 727-2500

Sunnyvale
Arrow Electronics
Phone: (408) 745-6600
Hamilton/Avnet Electronics
Phone: (408) 743-3366

Tustin
Anthem Electronics
Phone: (714) 730-8000

Woodland Hills
Avnet Electronics
Phone: (213) 883-0000

CANADA
Calgary, Alberta
Hamilton/Avnet Electronics
Phone: (403) 230-3586
Zentronics
Phone: (403) 272-1021

Downsview, Ontario
Cesco Electronics
Phone: (416) 661-0220

Mississauga, Ontario
Hamilton/Avnet Electronics
Phone: (416) 677-7432
Zentronics
Phone: (416) 451-9600

Montreal, Quebec
Cesco Electronics
Phone: (514) 735-5511
Zentronics
Phone: (514) 735-5361

Ottawa, Ontario
Cesco Electronics
Phone: (613) 226-6903
Hamilton/Avnet Electronics
Phone: (613) 226-1700
Zentronics
Phone: (613) 238-6411

Quebec City
Cesco Electronics
Phone: (418) 524-4641

Vancouver
Zentronics
Phone: (604) 688-2533

Ville St. Laurent, Quebec
Hamilton/Avnet Electronics
Phone: (514) 331-6443

Waterloo
Zentronics
Phone: (519) 884-5700

Winnipeg
Zentronics
Phone: (204) 775-8661

COLORADO
Aurora
Arrow Electronics
Phone (303) 696-1111

Denver
Wyle Distribution Group
Phone: (303) 457-9953

Englewood
Hamilton/Avnet Electronics
Phone: (303) 740-1000

CONNECTICUT
Danbury
Hamilton/Avnet Electronics
Phone: (203) 797-2800
Schweber Electronics
Phone: (203) 792-3500

Wallingford
Arrow Electronics
Phone: (203) 265-7741

FLORIDA
Ft. Lauderdale
Arrow Electronics
Phone: (305) 776-7790
Hamilton/Avnet Electronics
Phone: (305) 971-2900

Hollywood
Schweber Electronics
Phone: (305) 927-0511

Palm Bay
Arrow Electronics
Phone: (305) 725-1480

St. Petersburg
Hamilton/Avnet Electronics
Phone: (813) 576-3930

GEORGIA
Atlanta
Schweber Electronics
Phone: (404) 449-9170

Norcross
Arrow Electronics
Phone: (404) 449-8252
Hamilton/Avnet Electronics
Phone: (404) 447-7500
Schweber Electronics
Phone: (404) 449-9170

ILLINOIS
Chicago
Bell Industries
Phone: (312) 982-9210

Elk Grove
Schweber Electronics
Phone: (312) 364-3750

Schaumburg
Arrow Electronics
Phone: (312) 397-3440

Bensenville
Hamilton/Avnet Electronics
Phone: (312) 860-7700

INDIANA
Indianapolis
Pioneer Electronics
Phone: (317) 849-7300
Arrow Electronics
Phone: (317) 243-9353
Hamilton/Avnet Electronics
Phone: (317) 844-9333

KANSAS
Overland Park
Hamilton/Avnet Electronics
Phone: (913) 888-8900

MARYLAND
Baltimore
Arrow Electronics
Phone: (301) 247-5200

Columbia
Hamilton/Avnet Electronics
Phone: (301) 995-3500

Gaithersburg
Pioneer Washington Electronics
Phone: (301) 948-0710
Schweber Electronics
Phone: (301) 840-5900

MASSACHUSETTS
Bedford
Schweber Electronics
Phone: (617) 275-5100

Burlington
Lionex Corp.
Phone: (617) 272-9400

Woburn
Arrow Electronics
Phone: (617) 933-8130
Hamilton/Avnet Electronics
Phone: (617) 273-7500

MICHIGAN
Ann Arbor
Arrow Electronics
Phone: (313) 971-8220

Grand Rapids
Hamilton/Avnet Electronics
Phone: (616) 243-8805

Livonia
Hamilton/Avnet Electronics
Phone: (313) 522-4700
Pioneer Electronics
Phone: (313) 525-1800
Schweber Electronics
Phone: (313) 525-8100

MINNESOTA
Eden Prairie
Schweber Electronics
Phone: (612) 941-5280

Edina
Arrow Electronics
Phone: (612) 830-1800

Minneapolis
Arrow Electronics
Phone: (612) 830-1800
Hamilton/Avnet Electronics
Phone: (612) 932-0600

Minnetonka
Hamilton/Avnet Electronics
Phone: (612) 932-0666

MISSOURI
Earth City
Hamilton/Avnet Electronics
Phone: (314) 344-1200

St. Louis
Arrow Electronics
Phone: (314) 567-6888

NEW HAMPSHIRE
Manchester
Arrow Electronics
Phone: (603) 668-6968

NEW JERSEY
Cherry Hill
Hamilton/Avnet Electronics
Phone: (609) 424-0100

Fairfield
Arrow Electronics
Phone: (201) 575-5300
Hamilton/Avnet Electronics
Phone: (201) 575-3390
Lionex Corporation
Phone: (201) 227-7960
Schweber Electronics
Phone: (201) 227-7880

Moorestown
Arrow Electronics
Phone: (609) 235-1900

NEW MEXICO
Albuquerque
Hamilton/Avnet Electronics
Phone: (505) 765-1500
Arrow Electronics
Phone: (505) 243-4566

NEW YORK
Buffalo
Summit Distributors
Phone: (716) 887-2800

East Syracuse
Arrow Electronics
Phone: (315) 652-1000
Hamilton/Avnet Electronics
Phone: (315) 437-2642

Hauppauge, L.I.
Arrow Electronics
Phone: (516) 231-1000
Lionex Corp.
Phone: (516) 273-1660

Liverpool
Arrow Electronics
Phone: (315) 652-1000

Melville
Hamilton/Avnet Electronics
Phone: (516) 454-6012

Rochester
Arrow Electronics
Phone: (716) 275-0300
Hamilton/Avnet Electronics
Phone: (716) 475-9130
Schweber Electronics
Phone: (716) 424-2222

Westbury, L.I.
Schweber Electronics
Phone: (516) 334-7474

NORTH CAROLINA
Charlotte
Pioneer Electronics
Phone: (704) 527-8188

Raleigh
Arrow Electronics
Phone: (919) 876-3132
Hamilton/Avnet Electronics
Phone: (919) 878-0819
Schweber Electronics
Phone: (919) 876-0000

Winston-Salem
Arrow Electronics
Phone: (919) 725-8711

OHIO
Beechwood
Schweber Electronics
Phone: (216) 464-2970

Cleveland
Hamilton/Avnet Electronics
Phone: (216) 831-3500
Pioneer Electronics
Phone: (216) 587-3600

Centerville
Arrow Electronics
Phone: (513) 435-5563

Dayton
Hamilton/Avnet Electronics
Phone: (513) 433-0610
Pioneer Standard Electronics
Phone: (513) 236-9900

Solon
Arrow Electronics
Phone: (216) 248-3990

OKLAHOMA
Tulsa
Quality Components
Phone: (918) 664-8812

OREGON
Hillsboro
Wyle Distribution Group
Phone: (503) 640-6000

Lake Oswego
Hamilton/Avnet Electronics
Phone: (503) 635-8831

PENNSLYVANIA
Horsham
Schweber Electronics
Phone: (215) 441-0600

Pittsburgh
Arrow Electronics
Phone: (412) 856-7000
Pioneer/Pittsburgh
Phone: (412) 782-2300

TEXAS
Austin
Arrow Electronics
Phone: (512) 835-4180
Hamilton/Avnet Electronics
Phone: (512) 837-8911
Quality Components
Phone: (512) 835-0220

Dallas
Arrow Electronics
Phone: (214) 386-7500
Hamilton/Avnet Electronics
Phone: (214) 659-4111
Quality Components
Phone: (214) 387-4949
Schweber Electronics
Phone: (214) 661-5010

Houston
Arrow Electronics
Phone: (713) 530-4700
Hamilton/Avnet Electronics
Phone: (713) 780-1771
Quality Components
Phone: (713) 772-7100
Schweber Electronics
Phone: (713) 784-3600

UTAH
Salt Lake City
Hamilton/Avnet Electronics
Phone: (801) 972-4300
Wyle Distribution Group
Phone: (801) 974-9953

WASHINGTON
Bellevue
Arrow Electronics
Phone: (206) 643-4800
Hamilton/Avnet Electronics
Phone: (206) 453-5844
Wyle Distribution Group
Phone: (206) 453-8300

WISCONSIN
New Berlin
Hamilton/Avnet Electronics
Phone: (414) 784-4510

Oak Creek
Arrow Electronics
Phone: (414) 764-6600

Waukesha
Bell Industries
Phone: (414) 784-0235

FOR SIGNETICS PRODUCTS WORLDWIDE:

ARGENTINA
Philips Argentina S.A.
Buenos Aires
Phone: 541-7141

AUSTRALIA
Philips Industries Holdings Ltd.
Lane Cove, N.S.W.
Phone: 61-2-427-0888

AUSTRIA
Osterrichische Philips Bauelemente
Wien
Phone: 43-222-93-26-2

BELGIUM
N. V. Philips & MBLE
Bruxelles
Phone: 32-02-242-7400

BRAZIL
Ibrape
Sao Paulo
Phone: 55-011-211-2600

CHILE
Philips Chilena S.A.
Santiago
Phone: 56-2-39-4001

COLOMBIA
Sadape S.A.
Bogota D.E.
Phone: 600 600

DENMARK
Miniwatt A/S
Kobenhavn N.V.
Phone: 45-01-69-1622

FINLAND
Oy Philips Ab
Helsinki
Phone: 358-1-7271

FRANCE
R.T.C. La Radiotechnique-Compelec
Paris
Phone: 33-1-355-4499

GERMANY
Valvo
Hamburg
Phone: 49-40-3296-19

GREECE
Philips S.A. Hellenique
Athens
Phone: 9215111

HONG KONG
Philips Hong Kong, Ltd.
Kwai Chung
Phone: 852-0-245121

INDIA
Philips India & Elect. Ltd.
Bombay
Phone: 91-22-295144

INDONESIA
P.T. Philips-Ralin Electronics
Jakarta
Phone: 716 131

IRELAND
Philips Electrical Ltd.
Dublin
Phone: 353-1-69-3355

ISRAEL
Rapac Electronics, Ltd.
Tel Aviv
Phone: 972-3-477115

ITALY
Philips S.p.A.
Milano
Phone: 39-2-6994

JAPAN
Signetics Japan, Ltd.
Tokyo
Phone: 813-230-1521
Osaka
Phone: 816-304-6171

KOREA
Philips Elect. Korea Ltd.
Seoul
Phone: 794-4202

MALAYSIA
Philips Malaysia Sdn. Berhad
Kuala Lumpur
Phone: 77 44 11

MEXICO
Electronica S.A. de C.V.
Mexico D.F.
Phone: 52-721-61300

NETHERLANDS
Philips Nederland B.V.
Eindhoven
Phone: 31-40-79-3333

NEW ZEALAND
Philips Electrical Ind. Ltd.
Auckland
Phone: 64-9-605914

NORWAY
Norsk A/S Philips
Oslo
Phone: 47-2-680200

PERU
Cadesa
Lima
Phone: 326070

PHILIPPINES
Philips Industrial Dev., Inc.
Makati-Rizal
Phone: 868951

PORTUGAL
Philips Portuguesa SARL
Lisboa
Phone: 351-19-68-3121

SINGAPORE
Philips Project Dev. Pte., Ltd.
Singapore
Phone: 65-253-8811

SOUTH AFRICA
E.D.A.C. (PTY), Ltd.
Johannesburg
Phone: 27-11-614-2362

SPAIN
Miniwatt S.A.
Barcelona
Phone: 301 63 12

SWEDEN
A.B. Elcoma
Stockholm
Phone: 46-08-67-9780

SWITZERLAND
Philips A.G.
Zurich
Phone: 41-01-988-2211

TAIWAN
Philips Taiwan, Ltd.
Taipei
Phone: 886-2-563-1717

THAILAND
Philips Electrical Co. of Thailand Ltd.
Bangkok
Phone: 233-6330-9

TURKEY
Turk Philips
Ticaret A.S.
Istanbul
Phone: 43 59 10

UNITED KINGDOM
Mullard, Ltd.
London
Phone: 44-01-580-6633

UNITED STATES
Signetics International Corp.
Sunnyvale, California
Phone: (408) 739-7700

URUGUAY
Luzilectron S.A.
Montevideo
Phone: 91 43 21

VENEZUELA
Industrias Venezolanas Philips S.A.
Caracas
Phone: 58-2-36-0511

Signetics

MOS MICROPROCESSOR Products

Data Communications

SCN2651
SCN2652/SCN68652
SCN2653/SCN68653
SCN2661/SCN68661
SCN2681 SERIES

CRT Chip Set

SCN2670
SCN2671
SCN2672
SCB2673
SCN2674
SCB2675
SCB2677

Single Chip

SCN80 SERIES
SCC80 SERIES
SCN8031/SCN8051
SCC80C31/SCC80C51

S68000 Microprocessor Family

SCN68000
SCN68008
SCN68010
SCN68020
SCN68230
SCB68430
SCN68440
SCN68451
SCN68454
SCB68459
SCN68562
SCN68681

signetics
a subsidiary of U.S. Philips Corporation

Signetics Corporation
811 E. Arques Avenue
P.O. Box 3409
Sunnyvale, California 94088-3409
Telephone 408/739-7700

© IC MASTER 1984

PROGRAMMABLE COMMUNICATIONS INTERFACE (PCI) SCN2651

DESCRIPTION

The Signetics SCN2651 PCI is a universal synchronous/asynchronous data communications controller chip designed for microcomputer systems. It interfaces directly to the Signetics SCN2650 microprocessor and may be used in a polled or interrupt driven system environment. The SCN2651 accepts programmed instructions from the microprocessor and supports many serial data communication disciplines, synchronous and asynchronous, in the full or half-duplex mode.

The PCI serializes parallel data characters received from the microprocessor for transmission. Simultaneously, it can receive serial data and convert it into parallel data characters for input to the microcomputer.

The SCN2651 contains a baud rate generator which can be programmed to either accept an external clock or to generate internal transmit or receive clocks. Sixteen different baud rates can be selected under program control when operating in the internal clock mode.

The PCI is constructed using Signetics n-channel silicon gate depletion load technology and is packaged in a 28-pin DIP.

FEATURES

- **Synchronous operation**
  - **5 to 8-bit characters**
  - **Single or double SYN operation**
  - **Internal character synchronization**
  - **Transparent or non-transparent mode**
  - **Automatic SYN or DLE-SYN insertion**
  - **SYN or DLE stripping**
  - **Odd, even, or no parity**
  - **Local or remote maintenance loop back mode**
  - **Baud rate: dc to 1M bps (1X clock)**
- **Asynchronous operation**
  - **5 to 8-bit characters**
  - **1, 1 1/2 or 2 stop bits**
  - **Odd, even, or no parity**
  - **Parity, overrun and framing error detection**
  - **Line break detection and generation**
  - **False start bit detection**
  - **Automatic serial echo mode**
  - **Local or remote maintenance loop back mode**
  - **Baud rate: dc to 1M bps (1X clock)**
    - **dc to 62.5K bps (16X clock)**
    - **dc to 15.625K bps (64X clock)**

OTHER FEATURES

- **Internal or external baud rate clock**
- **16 internal rates-50 to 19,200 baud**
- **Double buffered transmitter and receiver**
- **Full or half duplex operation**
- **Fully compatible with 2650 CPU**
- **TTL compatible inputs and outputs**
- **Single 5V power supply**
- **No system clock required**
- **28-pin dual in-line package**

PIN CONFIGURATION

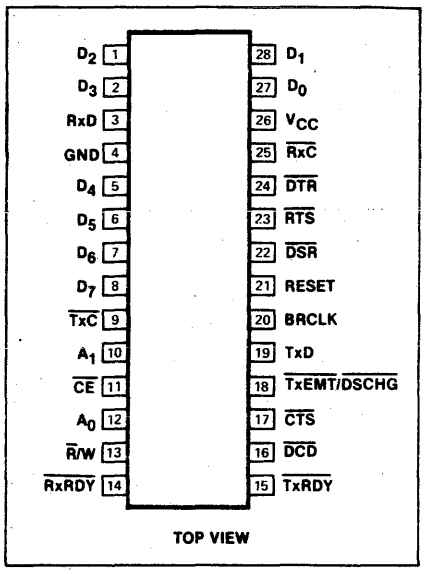

APPLICATIONS

- **Intelligent terminals**
- **Network processors**
- **Front end processors**
- **Remote data concentrators**
- **Computer to computer links**
- **Serial peripherals**

BLOCK DIAGRAM

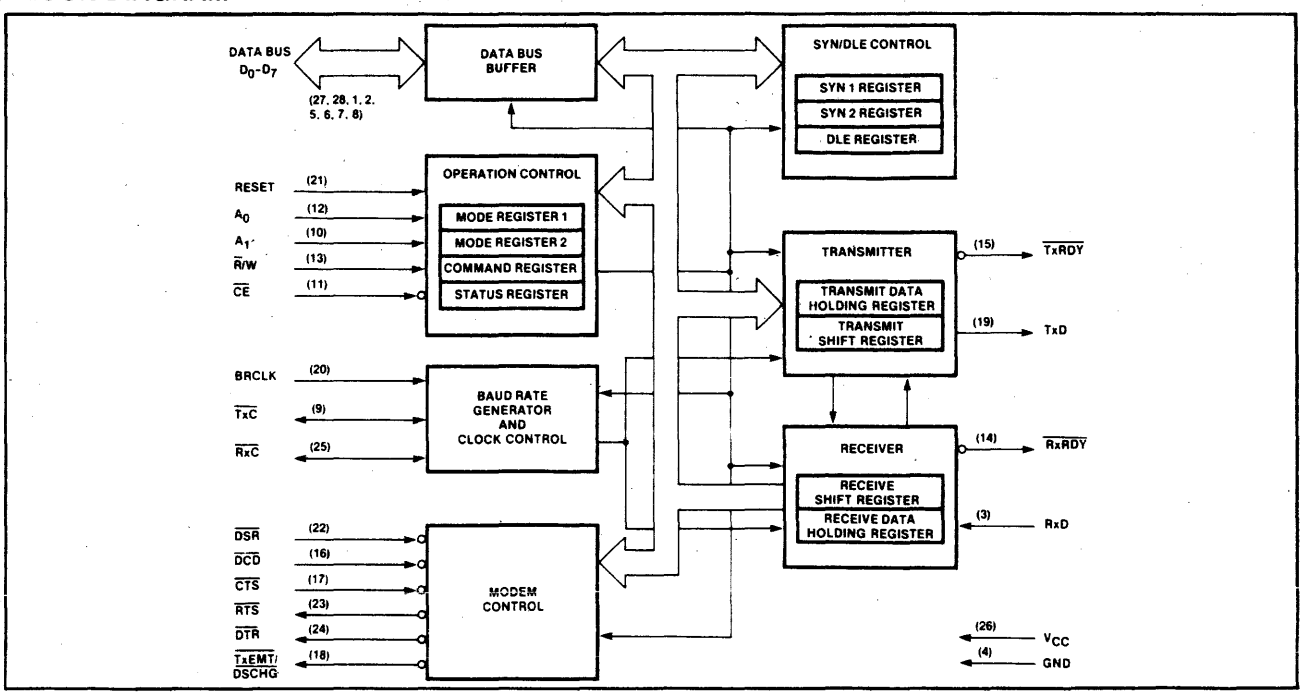

© IC MASTER 1984

MULTI-PROTOCOL COMMUNICATIONS CONTROLLER SCN2652/SCN68652

DESCRIPTION

The SCN2652/68652 Multi-Protocol Communications Controller (MPCC) is a monolithic n-channel MOS LSI circuit that formats, transmits and receives synchronous serial data while supporting bit-oriented or byte control protocols. The chip is TTL compatible, operates from a single +5V supply, and can interface to a processor with an 8 or 16-bit bidirectional data bus.

FEATURES

- DC to 1Mbps or 2Mbps data rate
- Bit-oriented protocols (BOP): SDLC, ADCCP, HDLC
- Byte-control protocols (BCP): DDCMP, BISYNC (external CRC)
- Programmable operation
  - 8 or 16-bit tri-state data bus
  - Error control—CRC or VRC or none
  - Character length—1 to 8 bits for BOP or 5 to 8 bits for BCP
  - SYNC or secondary station address comparison for BCP-BOP
  - Idle transmission of SYNC/FLAG or MARK for BCP-BOP
- Automatic detection and generation of special BOP control sequences, i.e., FLAG, ABORT, GA
- Zero insertion and deletion for BOP
- Short character detection for last BOP data character
- SYNC generation, detection, and stripping for BCP
- Maintenance Mode for self-testing
- TTL compatible
- Single +5V supply

APPLICATIONS

- Intelligent terminals
- Line controllers
- Network processors
- Front end communications
- Remote data concentrators
- Communication test equipment
- Computer to computer links

PIN CONFIGURATION

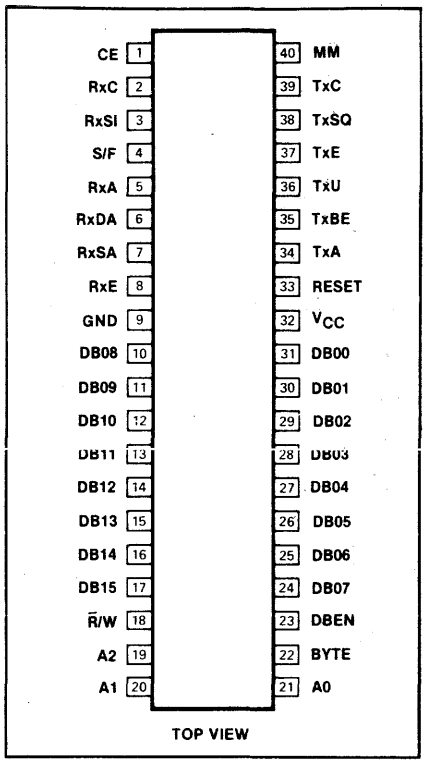

BLOCK DIAGRAM

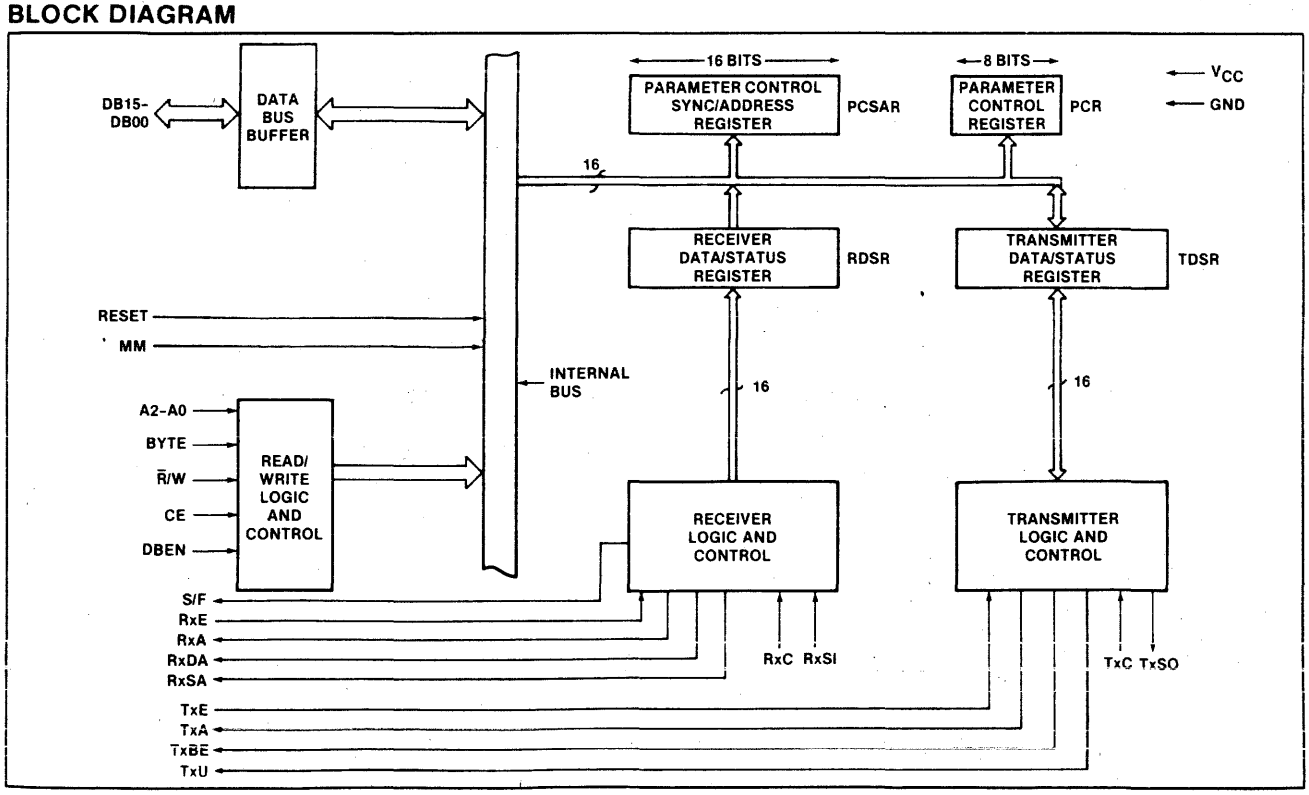

© IC MASTER 1984

POLYNOMIAL GENERATOR CHECKER (PGC) SCN2653/SCN68653

DESCRIPTION

The Signetics SCN2653/68653 Polynomial Generator Checker (PGC) is a polynomial generator checker/character comparator circuit that complements a receiver/transmitter (R/T or USART/USRT/UART) in the support of character oriented data link controls. Table 1 defines many of the more commonly used PGC terms and abbreviations.

Parallel data characters transferred between the CPU and R/T are monitored by the PGC which performs block check character (BCC) and parity (VRC) generation/checking, single character detection, and two character sequence detection. Since the PGC operates on parallel characters, the data transmission format may be serial (synchronous or asynchronous) or parallel.

There are four modes of BCC accumulation and each mode can select one of three polynomials to compute the BCC. In the BISYNC normal and transparent modes, the PGC determines which characters are to be accumulated and which characters are to be excluded from the accumulation. The block terminating characters and the initiation and termination of BISYNC transparent text can be detected and an interrupt generated. The single interrupt output represents the inclusive OR of four maskable status conditions.

In the automatic accumulation mode, all characters are accumulated while the single accumulate mode requires a specific accumulation command for each character to be accumulated.

Character accumulation control and character comparisons are facilitated by a character class array which places each of 128 characters into one of four character classes. The four classes are normal, SYN/BISYNC not included, block terminating character (BTC)/search character (SC), and secondary search character (SSC).

Additional PGC applications include off-line R/T operation where the BCC is generated on data not sent to the R/T, BCC multiplexing by sharing the PGC among several R/Ts and reading/writing the partial BCC accumulation on a character by character basis, VRC generation/checking on characters appearing on a bidirectional data bus, and programmable character comparisons or searches.

PGC operation is half duplex (either receive or transmit, one way or two way alternate). Full duplex (two way simultaneous) is achieved by using two PGCs. The device is directly compatible with the Signetics SCN2651 Programmable Communications Interface (PCI) and SCN2661 Enhanced Programmable Communications Interface (EPCI). When used in BISYNC modes with the SCN2661, software requirements are minimized by the SCN2653-SCN2661 control character comparisons, character sequence comparisons, and automatic DLE insertion/detection.

Other bus oriented R/Ts can be interfaced to the PGC with a minimum of external circuitry. See figure 1 for a typical system configuration.

This NMOS LSI circuit is TTL compatible, operates from a single + 5V supply and is contained in a 16 pin dual in line package.

PIN CONFIGURATION

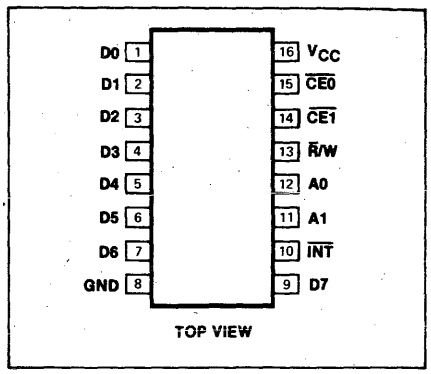

FEATURES

- Parallel Block Check Character accumulation/checking: CRC-16, CRC-12, LRC-8
- BISYNC normal and transparent modes
- Automatic or single character accumulation modes
- Character detection - up to 128 characters
- Two character sequence detection; examples: DLE-STX, ACK 0, ACK 1, WACK, RVI, DISC, WBT
- 6, 7, or 8-bit characters
- VRC generation/checking on data bus
- Four maskable interrupt conditions
- Four classes of characters
- Internal power-on reset
- Maximum character accumulation rate of 500 kHz (4 Mbps)
- Directly compatible with Signetics SCN2651, SCN2652 and SCN2661
- No system clock required
- TTL compatible inputs and outputs
- Single 5V supply
- 16-pin dual in line package

APPLICATIONS

- Character oriented data link control:
  - -dedicated to one USART/USRT
  - -multiplexed among several USART/USRTs
- Automated BISYNC with 2661 (minimal software intervention)
- BCC and VRC generation/detection on a block of memory or peripheral data
- Programmable character array comparator

© IC MASTER 1984

BLOCK DIAGRAM

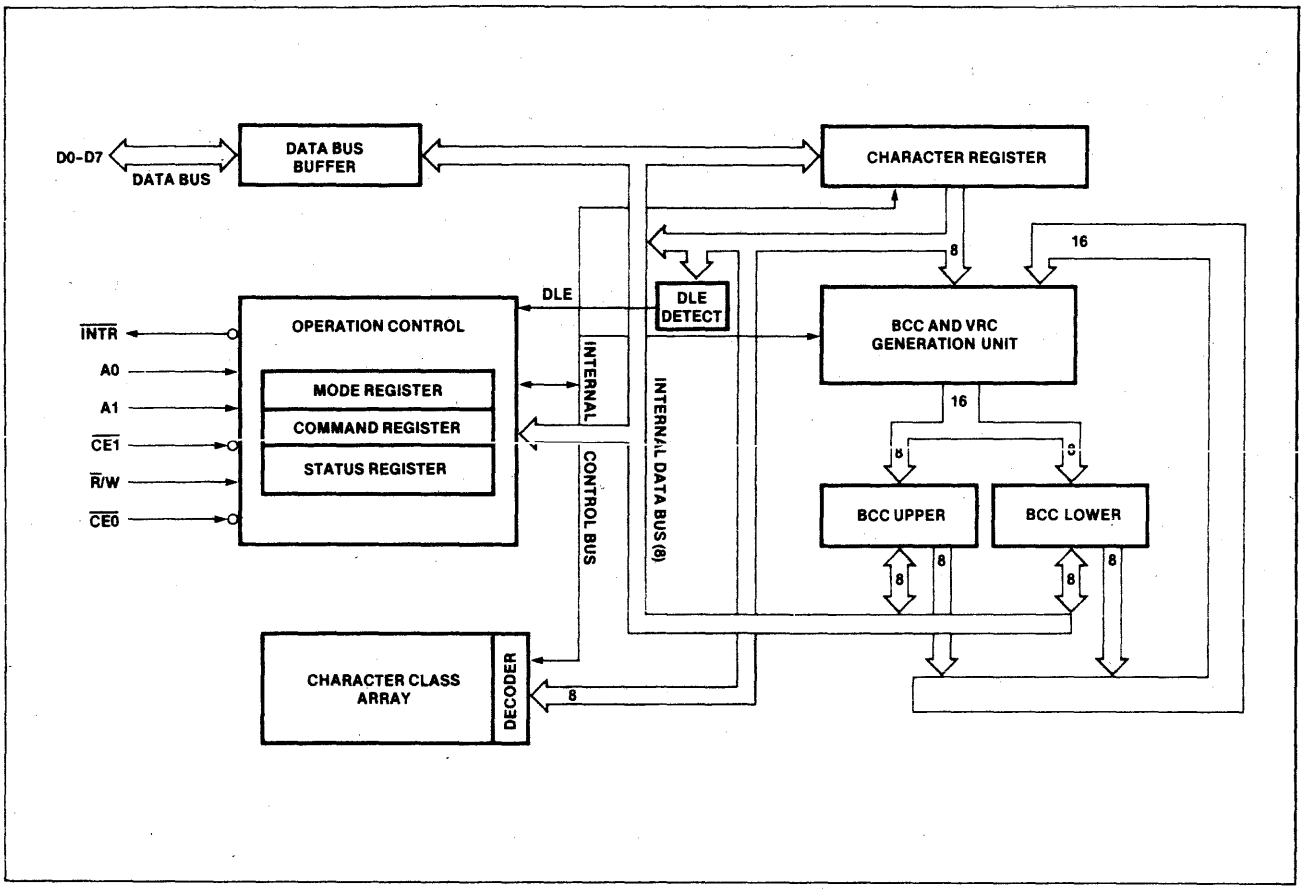

© IC MASTER 1984

ENHANCED PROGRAMMABLE COMMUNICATIONS INTERFACE SCN2661/68661

DESCRIPTION

The Signetics SCN2661 EPCI is a universal synchronous/asynchronous data communications controller chip that is an enhanced version of the SCN2651. It interfaces easily to all 8-bit and 16-bit microprocessors and may be used in a polled or interrupt driven system environment. The SCN2661 accepts programmed instructions from the microprocessor while supporting many serial data communications disciplines—synchronous and asynchronous—in the full or half-duplex mode. Special support for BISYNC is provided.

The EPCI serializes parallel data characters received from the microprocessor for transmission. Simultaneously, it can receive serial data and convert it into parallel data characters for input to the microcomputer.

The SCN2661 contains a baud rate generator which can be programmed to either accept an external clock or to generate internal transmit or receive clocks. Sixteen different baud rates can be selected under program control when operating in the internal clock mode. Each version of the EPCI (A, B, C) has a different set of baud rates.

The EPCI is available in two packages: a 28-pin (0.6" wide) DIP and a 24-pin (0.4" wide) DIP. The following are the differences between the 24-pin and the 28-pin versions:

1. The 24-pin version provides a single interrupt output ($\overline{INTR}$) instead of the three interrupt outputs ($\overline{RxRDY}$, $\overline{TxRDY}$, $\overline{TxEMT}$/$\overline{DSCHG}$) supplied on the 28-pin version. $\overline{INTR}$ will be asserted (low) when one or more of the status bits SR0, SR1 or SR2 is a logic one.
2. Two modem interface pins, the $\overline{DTR}$ output and the $\overline{DSR}$ input, are eliminated in the 24-pin version. Because of this, status bit SR7 should be ignored and the setting of status bit SR2 due to a data set change (DSCHG) can be caused only by a change of the $\overline{DCD}$ input. Since the $\overline{DTR}$ output is eliminated, command register bit CR1 does not perform any function, although it remains writable and readable.

Other than the above, the functional operation, DC electrical characteristics, and AC electrical characteristics of the 24-pin version are identical to the 28-pin version.

FEATURES

- Synchronous operation
  - 5 to 8-bit characters plus parity
  - Single or double SYN operation
  - Internal or external character synchronization
  - Transparent or non-transparent mode
  - Transparent mode DLE stuffing (Tx) and detection (Rx)
  - Automatic SYN or DLE-SYN insertion
  - SYN, DLE and DLE-SYN stripping
  - Odd, even, or no parity
  - Local or remote maintenance loop back mode
  - Baud rate: dc to 1M bps (1X clock)
- Asynchronous operation
  - 5 to 8-bit characters plus parity
  - 1, 1½ or 2 stop bits transmitted
  - Odd, even, or no parity
  - Parity, overrun and framing error detection
  - Line break detection and generation
  - False start bit detection
  - Automatic serial echo mode (echoplex)
  - Local or remote maintenance loop back mode
  - Baud rate: dc to 1M bps (1X clock)
    - dc to 62.5K bps (16X clock)
    - dc to 15.625K bps (64X clock)

OTHER FEATURES

- Internal or external baud rate clock
- 3 baud rate sets
- 16 internal rates for each set
- Double buffered transmitter and receiver
- Dynamic character length switching
- Full or half duplex operation
- TTL compatible inputs and outputs
- RxC and TxC pins are short circuit protected
- Single 5V power supply
- No system clock required

APPLICATIONS

- Intelligent terminals
- Network processors
- Front end processors
- Remote data concentrators
- Computer to computer links
- Serial peripherals
- BISYNC adaptors

PIN CONFIGURATIONS

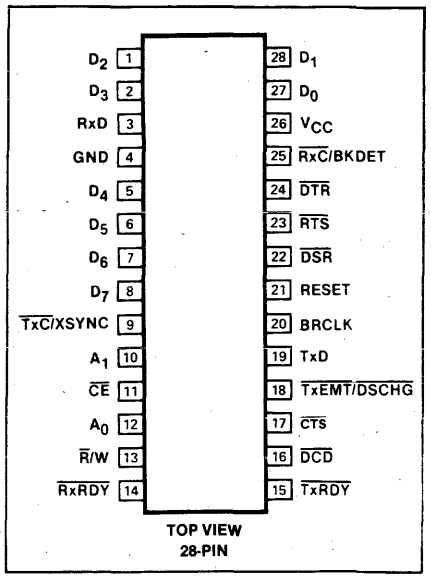

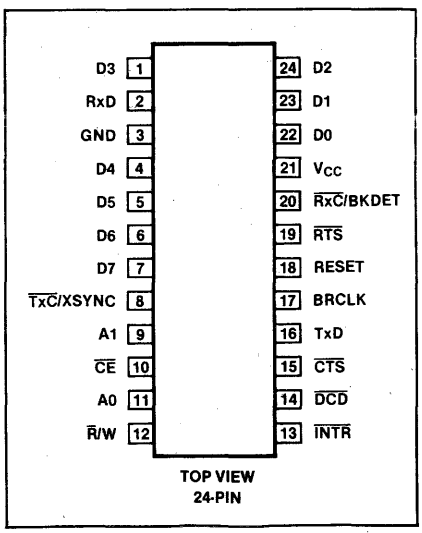

© IC MASTER 1984

BLOCK DIAGRAM

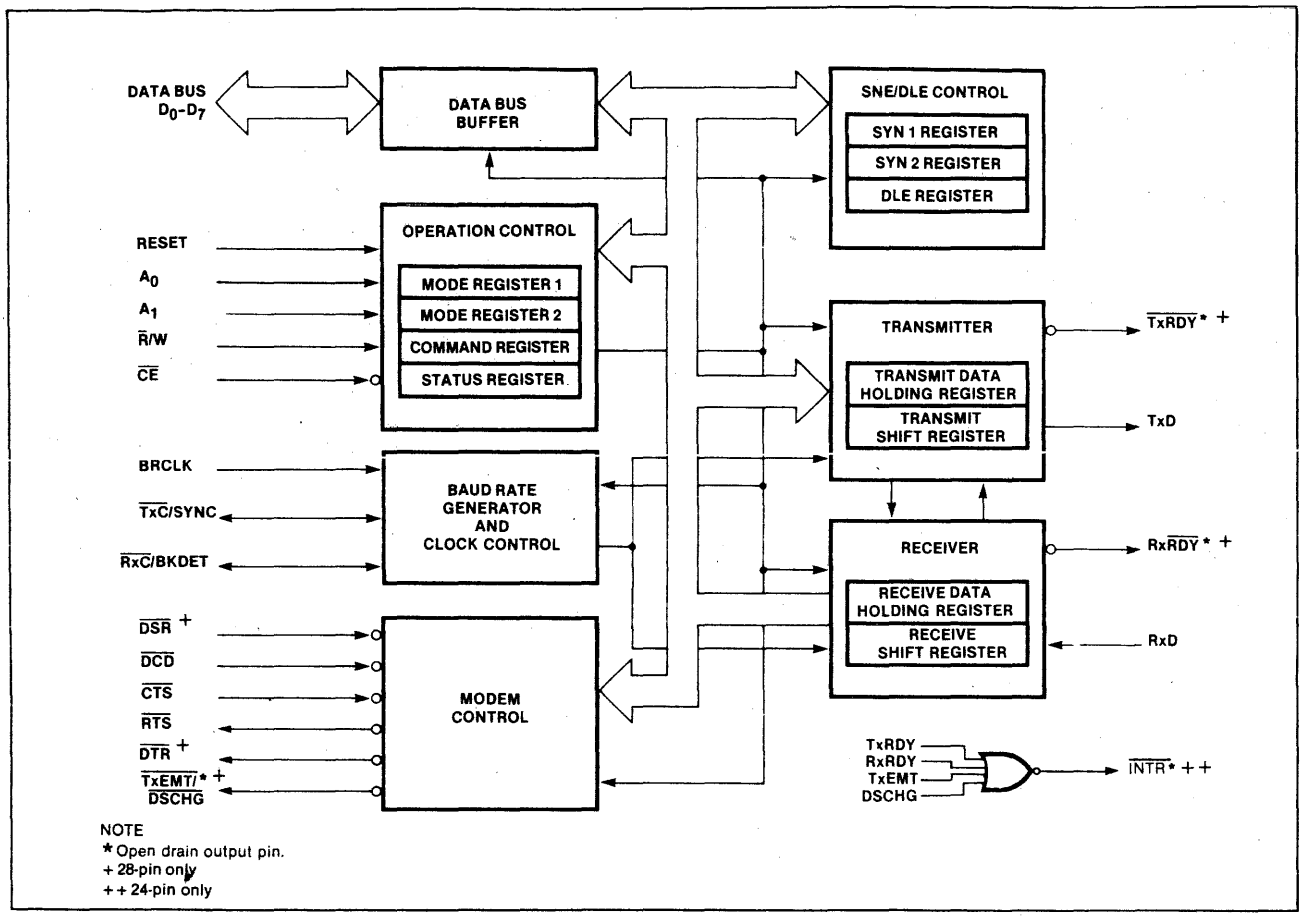

NOTE
* Open drain output pin.
+ 28-pin only
++ 24-pin only

© IC MASTER 1984

DUAL ASYNCHRONOUS RECEIVER/TRANSMITTER (DUART) SCN2681 SERIES

DESCRIPTION

The Signetics SCN2681 Dual Universal Asynchronous Receiver/Transmitter (DUART) is a single chip MOS-LSI communications device that provides two independent full-duplex asynchronous receiver/transmitter channels in a single package. It interfaces directly with microprocessors and may be used in a polled or interrupt driven system.

The operating mode and data format of each channel can be programmed independently. Additionally, each receiver and transmitter can select its operating speed as one of eighteen fixed baud rates, a 16x clock derived from a programmable counter/timer, or an external 1x or 16x clock. The baud rate generator and counter/timer can operate directly from a crystal or from external clock inputs. The ability to independently program the operating speed of the receiver and transmitter make the DUART particularly attractive for dual-speed channel applications such as clustered terminal systems.

Each receiver is quadruply buffered to minimize the potential of receiver overrun or to reduce interrupt overhead in interrupt driven systems. In addition, a flow control capability is provided to disable a remote DUART transmitter when the buffer of the receiving device is full.

Also provided on the SCN2681 are a multipurpose 7-bit input port and a multipurpose 8-bit output port. These can be used as general purpose I/O ports or can be assigned specific functions (such as clock inputs or status/interrupt outputs) under program control.

The SCN2681 is available in three package versions to satisfy various system requirements: 40-pin and 28-pin, both 0.6″ wide DIPs, and a compact 24-pin, 0.4″ wide, DIP.

FEATURES

- **Dual full-duplex asynchronous receiver/transmiter**
- **Quadruple buffered receiver data registers**
- **Programmable data format**
  - **—5 to 8 data bits plus parity**
  - **—Odd, even, no parity or force parity**
  - **—1, 1.5 or 2 stop bits programmable in 1/16 bit increments**
- **Programmable baud rate for each receiver and transmiter selectable from:**
  - **—18 fixed rates: 50 to 38.4K baud**
  - **—One user defined rate derived from programmable timer/counter**
  - **—External 1x or 16x clock**
- **Parity, framing, and overrun error detection**
- **False start bit detection**
- **Line break detection and generation**
- **Programmable channel mode**
  - **—Normal (full duplex)**
  - **—Automatic echo**
  - **—Local loopback**
  - **—Remote loopback**
- **Multi-function programmable 16-bit counter/timer**
- **Multi-function 7-bit input port**
  - **—Can serve as clock or control inputs**
  - **—Change of state detection on four inputs**
- **Multi-function 8-bit output port**
  - **—Individual bit set/reset capability**
  - **—Outputs can be programmed to be status/interrupt signals**
- **Versatile interrupt system**
  - **—Single interrupt output with eight maskable interrupting conditions**
  - **—Output port can be configured to provide a total of up to six separate wire-OR'able interrupt outputs**
- **Maximum data transfer: 1X — 1MB/sec, 16X — 125KB/sec**
- **Automatic wake-up mode for multidrop applications**
- **Start-end break interrupt/status**
- **Detects break which originates in the middle of a character**
- **On-chip crystal oscillator**
- **TTL compatible**
- **Single +5V power supply**

PIN CONFIGURATION

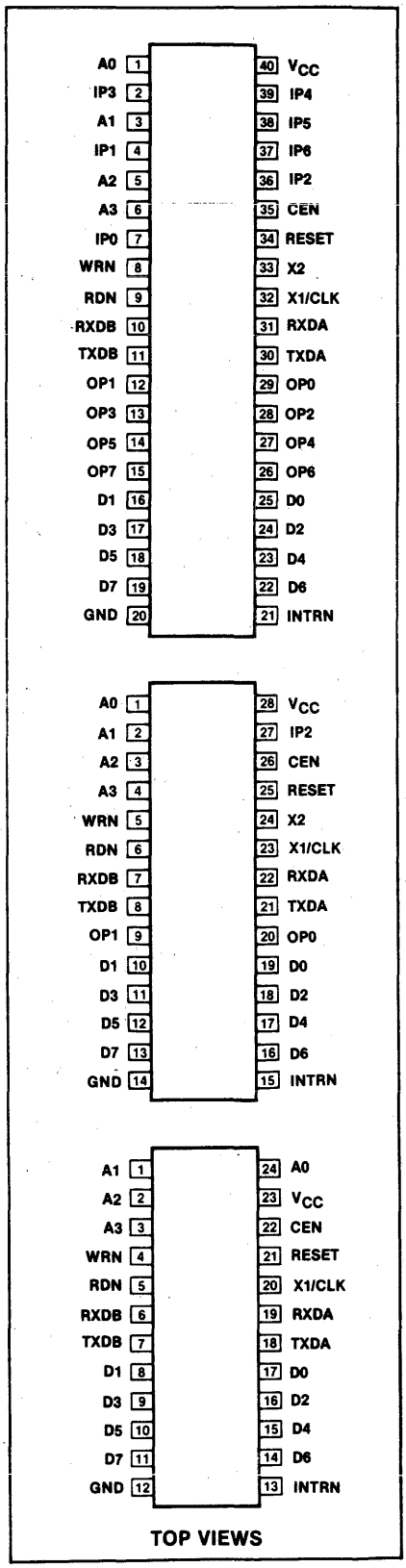

TOP VIEWS

© IC MASTER 1984

BLOCK DIAGRAM

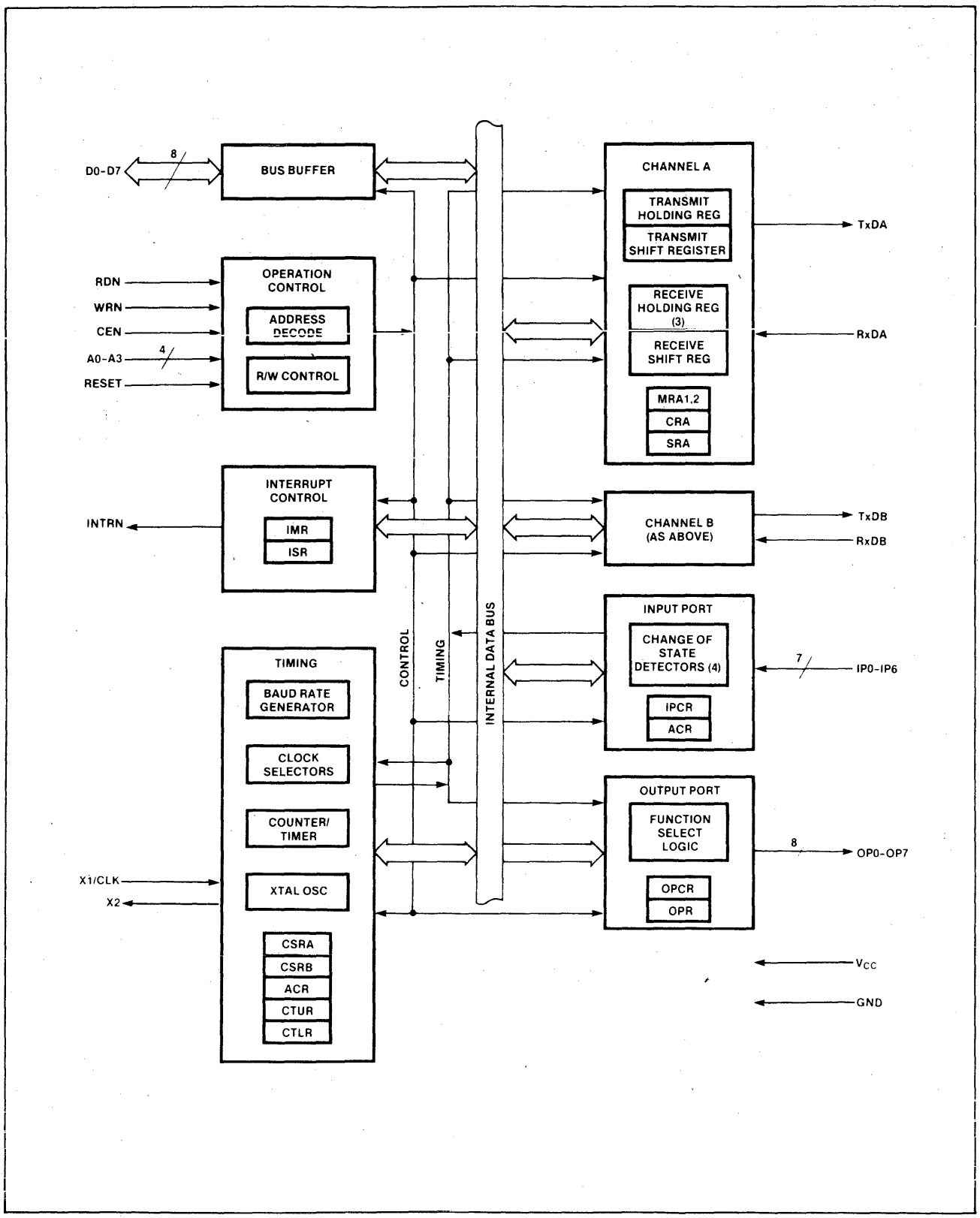

© IC MASTER 1984

DISPLAY CHARACTER AND GRAPHICS GENERATOR (DCGG) SCN2670

DESCRIPTION

The Signetics Display Character and Graphics Generator (DCGG) is a mask-programmable 11,648-bit line select character generator. It contains 128 10X9 characters placed in a 10X16 matrix, and has the capability of shifting certain characters, such as j, y, g, p and q, that normally extend below the baseline. Character shifting, previously requiring additional external circuitry, is now accomplished internally by the DCGG; effectively, the 9 active lines are lowered within the matrix to compensate for the character's position.

Seven bits of an 8-bit address code are used to select 1 of the 128 available characters. The eighth bit functions as a chip enable signal. Each character is defined by a pattern of logic Is and 0s stored in a 10X9 matrix. When a specific 4-bit binary line address code is applied, a word of 10 parallel bits appears at the output. The lines can be sequentially selected, providing a 9-word sequence of 10 parallel bits per word for each character selected by the address inputs. As the line address inputs are sequentially addressed, the device will automatically place the 10X9 character in 1 of 2 preprogrammed positions on the 16-line matrix with the positions defined by the 4-line address inputs. One or more of the 10 parallel outputs can be used as control signals to selectively enable functions such as half-dot shift, color selection, etc.

The 2670 DCGG includes latches to store the character address and line address data. A control input to inhibit character data output for certain groups of characters is also provided. The 2670 also includes a graphics capability, wherein the 8-bit character code is translated directly into 256 possible user programmable graphic patterns. Thus, the DCGG can generate data for 384 distinct patterns, of which 128 are defined by the mask programmable ROM. See figure 1 for a typical applications display.

FEATURES

- 128 10 x 9 matrix characters
- 256 graphic characters
- Optional thin graphics for forms
- Character and line address latches
- Internal descend logic
- 200nsec and 300nsec character select access time versions
- Control character output inhibit logic
- Static operation—no clocks required
- Single 5V power supply
- TTL compatible inputs and outputs

PIN CONFIGURATION

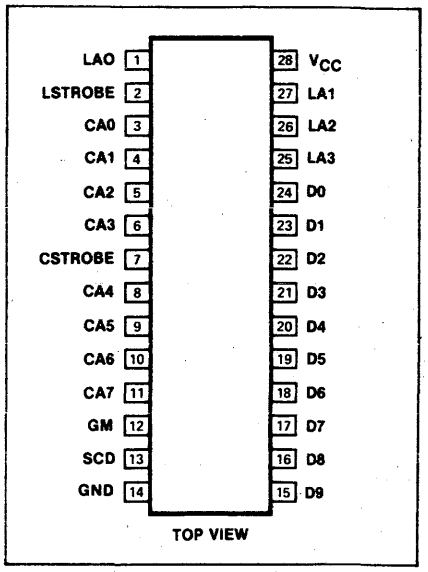

BLOCK DIAGRAM

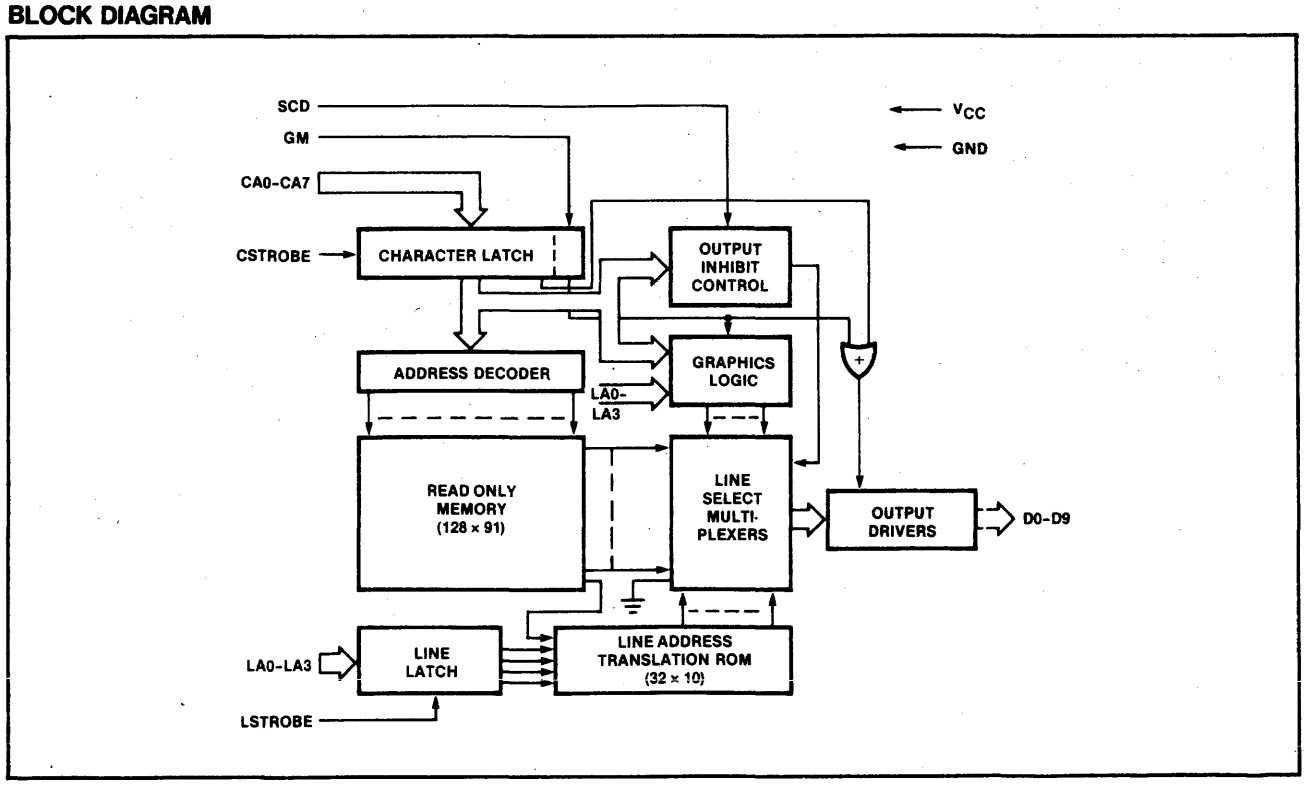

© IC MASTER 1984

PROGRAMMABLE KEYBOARD AND COMM CONTROLLER (PKCC) SCN2671

DESCRIPTION

The Signetics 2671 Programmable Keyboard and Communications Controller (PKCC) is an MOS LSI device which provides a versatile keyboard encoder and an independent full duplex asynchronous communications controller. It is intended for use in microprocessor based systems and provides an eight bit data bus interface.

The keyboard encoder handles the scanning, debounce, and encoding of a keyboard matrix with a maximum of 128 keys. It provides four levels of key encoding corresponding to the separate SHIFT and CONTROL input combinations. Four keyboard rollover modes can be programmed including provisions for up to 16 latched keys. Control outputs are provided for interfacing with contact or capacitive keyboards. An eight bit keyboard status register provides status information to the CPU.

The receiver section of the communications controller accepts serial data from the RxD pin and converts it to parallel data characters. Simultaneously, the transmitter section accepts parallel data from the data bus and outputs serialized data onto the TxD pin. Received data is checked for parity and framing errors, and break conditions are flagged. Character lengths can be programmed as 5, 6, 7, or 8 bits not including parity, start or stop bits. An internal baud rate generator (BRG) with 16 divider ratios can be used to derive the receive and/or transmit clocks. The BRG can accept an external clock or operate directly from a crystal. An eight bit communications status register provides status information to the CPU.

The PKCC has an interrupt mask register to selectively enable certain keyboard and communications status bits to generate interrupts. Priority encoded interrupt vectoring is available. Upon receipt of an interrupt acknowledge, an interrupt vector will be output on D0-D7 reflecting the source of the interrupt. The interrupt source can also be read from an interrupt status register.

FEATURES

- **Keyboard interface**
  - **Contact or capacitive keyboard**
  - **Up to 128 keys on an 8 X 16 matrix**
  - **Encoded or unencoded operation**
  - **Four code levels per key**
  - **Latched key option—separate depress and release codes**
  - **Programmable scan rate and debounce time**
  - **Programmable rollover modes**
  - **Programmable auto-repeat for selected keys**
  - **Tone output—two frequencies**
- **Asynchronous communication interface**
  - **Internal baud rate generator—16 rates**
  - **Full duplex operation**
  - **Detection of start and end of break**
  - **Programmable break generation**
  - **Programmable character parameters**
  - **Auto-echo and maintenance loopback modes**
- **Polled or interrupt operation**
- **Interrupt priority controller and vector generator**
- **Operates directly from crystal or external clocks**
- **TTL compatible**
- **Single +5 volt power supply**
- **40 pin dual in-line package**

APPLICATIONS

- **CRT terminals**
- **Hard copy terminals**
- **Word processing systems**
- **Data entry terminals**
- **Small business computers**

PIN CONFIGURATION

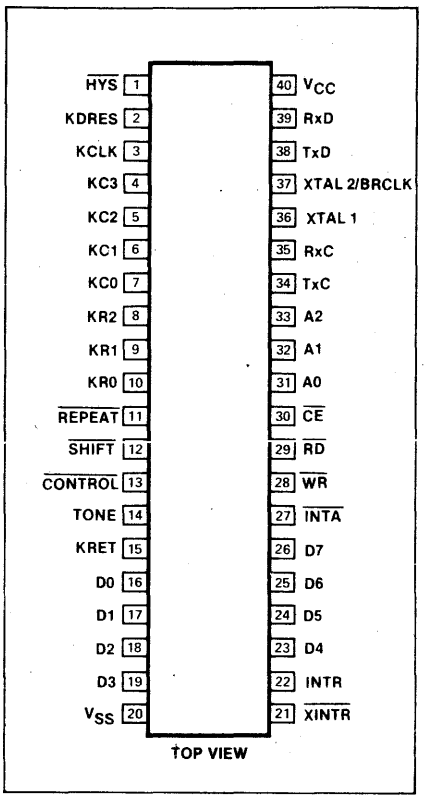

© IC MASTER 1984

PROGRAMMABLE KEYBOARD AND COMM CONTROLLER (PKCC) SCN2671

BLOCK DIAGRAM

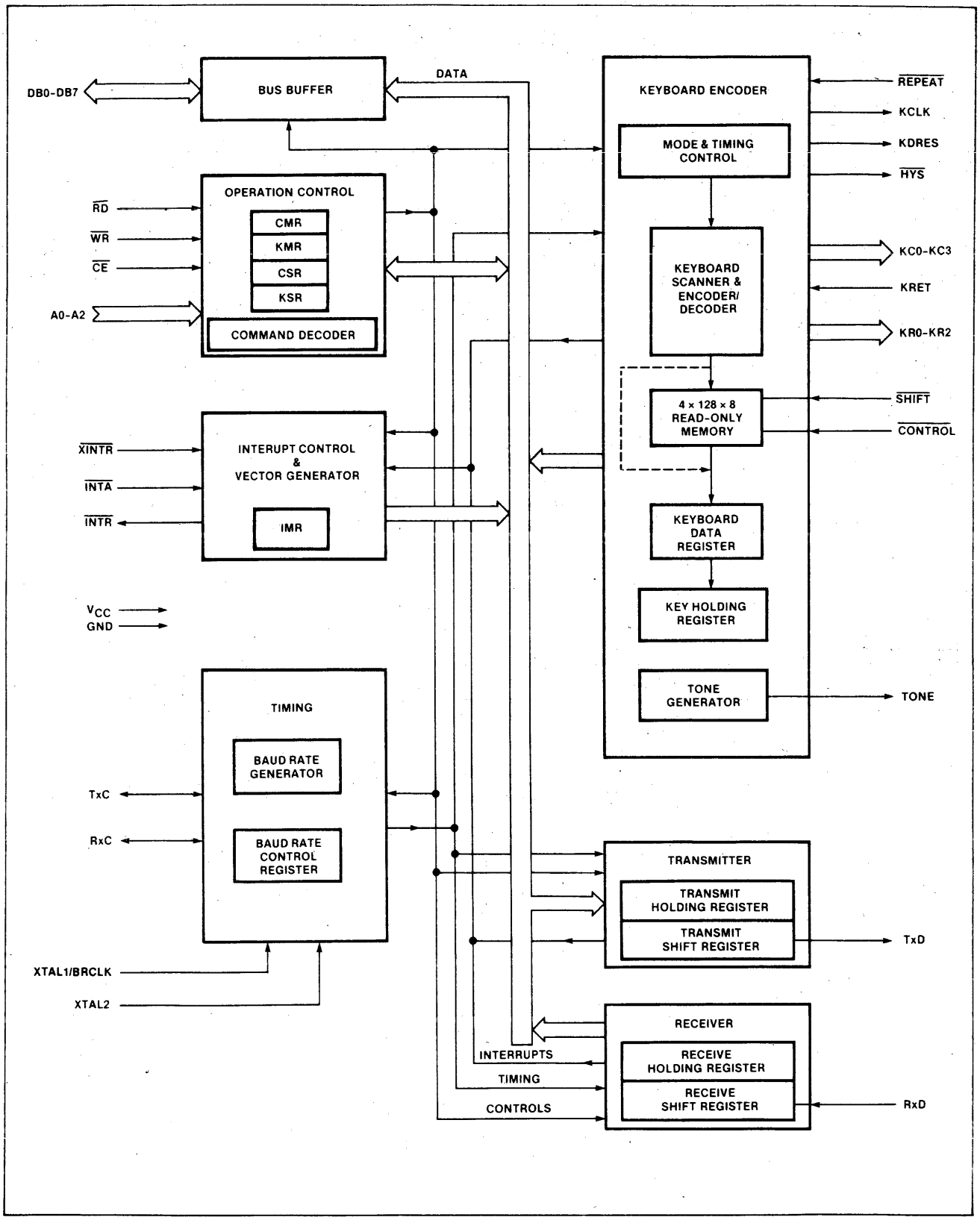

© IC MASTER 1984

PROGRAMMABLE VIDEO TIMING CONTROLLER (PVTC) SCN2672

DESCRIPTION

The Signetics SCN2672 Programmable Video Timing Controller (PVTC) is a programmable device designed for use in CRT terminals and display systems that employ raster scan techniques. The PVTC generates the vertical and horizontal timing signals necessary for the display of interlaced or non-interlaced data on a CRT monitor. It provides consecutive addressing to a user specified display buffer memory domain and controls the CPU-display buffer interface for various buffer configuration modes. A variety of operating modes, display formats, and timing profiles can be implemented by programming the control registers in the PVTC.

A minimum CRT terminal system configuration consists of a PVTC, a SCN2671 Keyboard and Communication Controller (PKCC), a SCN2670 Display Character and Graphics Generator (DCSG), a SCN2670 Video and Attributes Controller (VAC), a single chip microcomputer such as the 8048, a display buffer RAM, and a small amount of TTL for miscellaneous address decoding, interface, and control. Typically, the package count for a minimum system is between 15 and 20 devices; system complexity can be enhanced by upgrading the microprocessor and expanding via the system address and data busses.

FEATURES

- **4MHz and 2.7MHz character rate versions**
- **Up to 256 characters per row**
- **1 to 16 raster lines per character row**
- **Up to 128 character rows per frame**
- **Programmable horizontal and vertical sync generators**
- **Interlaced or non–interlaced operation**
- **Up to 16K RAM addressing for multiple page operation**
- **Automatic wraparound of RAM**
- **Addressable incrementable and readable cursor**
- **Programmable cursor size, position, and blink**
- **Split screen and horizontal scroll capability**
- **Light pen register**
- **Selectable buffer interface modes**
- **Dynamic RAM refresh**
- **Completely TTL compatible**
- **Single +5 volt power supply**
- **Power on reset circuit**

APPLICATIONS

- **CRT terminals**
- **Word processing systems**
- **Small business computers**
- **Home Computers**

PIN CONFIGURATION

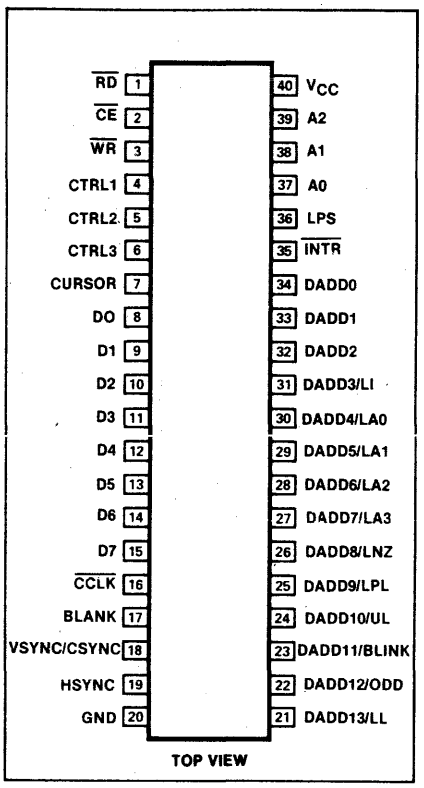

BLOCK DIAGRAM

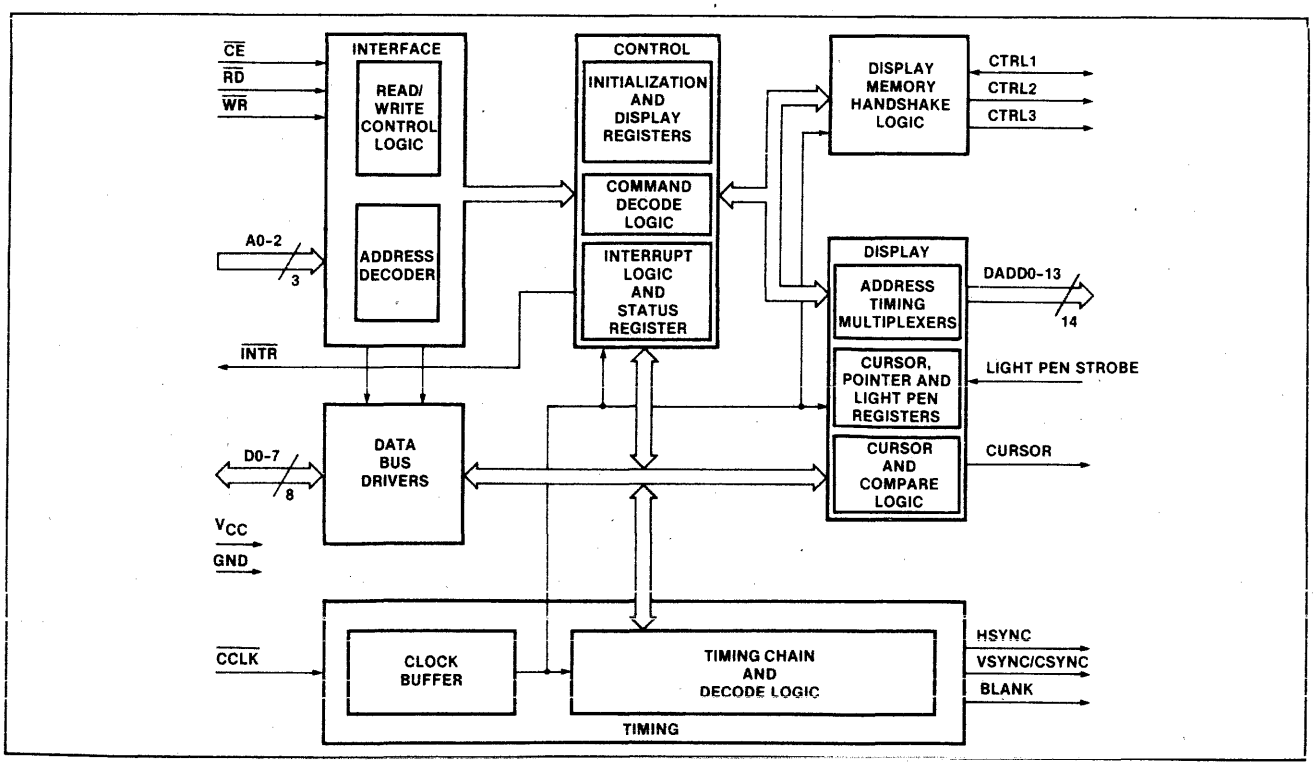

© IC MASTER 1984

VIDEO ATTRIBUTES CONTROLLER (VAC) SCB2673

DESCRIPTION

The Signetics 2673A and 2673B Video Attributes Controllers (VAC) are bipolar LSI devices designed for CRT terminals and display systems that employ raster scan techniques. Each contains a high speed video shift register, field and character attributes logic, attribute latch, cursor format logic and half dot shift control.

The VAC provides control of visual attributes on a field or character by character. Internal logic preserves field attribute data from character row to character row so that an attribute byte is not required at the beginning of each row. The 2673B provides for reverse video, blank (non-display), blink, underline and highlight attributes and a graphics mode attribute to work in conjunction with the Signetics 2670 Display Character and Graphics Generator (DCGG). The 2673A substitutes a light pen (strike-thru) attribute for the graphics attribute.

The horizontal dot frequency is the basic timing input to the VAC. Internally, this clock is divided down to provide a character clock output for system synchronization. Up to ten bits of video dot data are parallel loaded into the video shift register on each character boundary. The video data is shifted out on three outputs at the dot frequency. On the VIDEO output, the data is presented as a three level signal representing low, medium and high intensities. The three intensities are also encoded on two TTL compatible video outputs. Light or dark screen background can be selected.

FEATURES

- **25MHz video dot rate**
- **Three level current driven (75 ohms) video output**
- **Three level encoded TTL video outputs**
- **Character/field attribute logic**
  Reverse video
  Character blank
  Character blink
  Underline
  Highlight
  Light pen strike-thru or graphics control
- **Field attributes extend from row to row**
- **Light or dark field**
- **Cursor reverse video logic**
- **Up to 10 dots per character**
- **Composite blanking for light field retrace**
- **Optional field graphics control output**
- **High speed bipolar design**
- **40 pin dual in-line package**
- **TTL compatible**
- **Compatible with Signetics 2672 PVTC and 2670 DCGG**

APPLICATIONS

- **CRT terminals**
- **Word processing systems**
- **Small business computers**

PIN CONFIGURATION

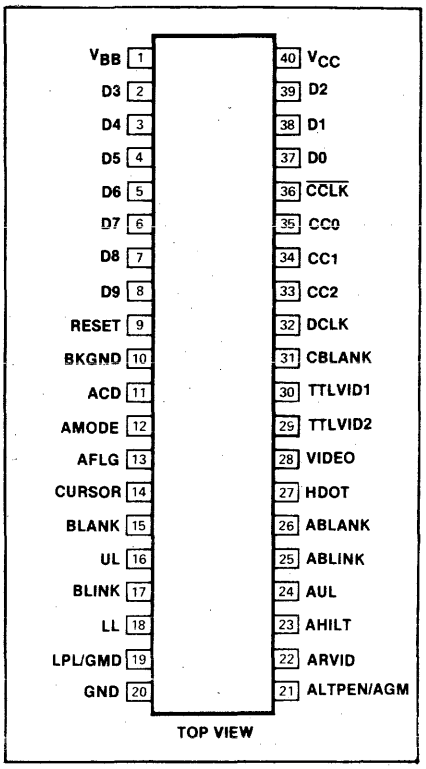

BLOCK DIAGRAM

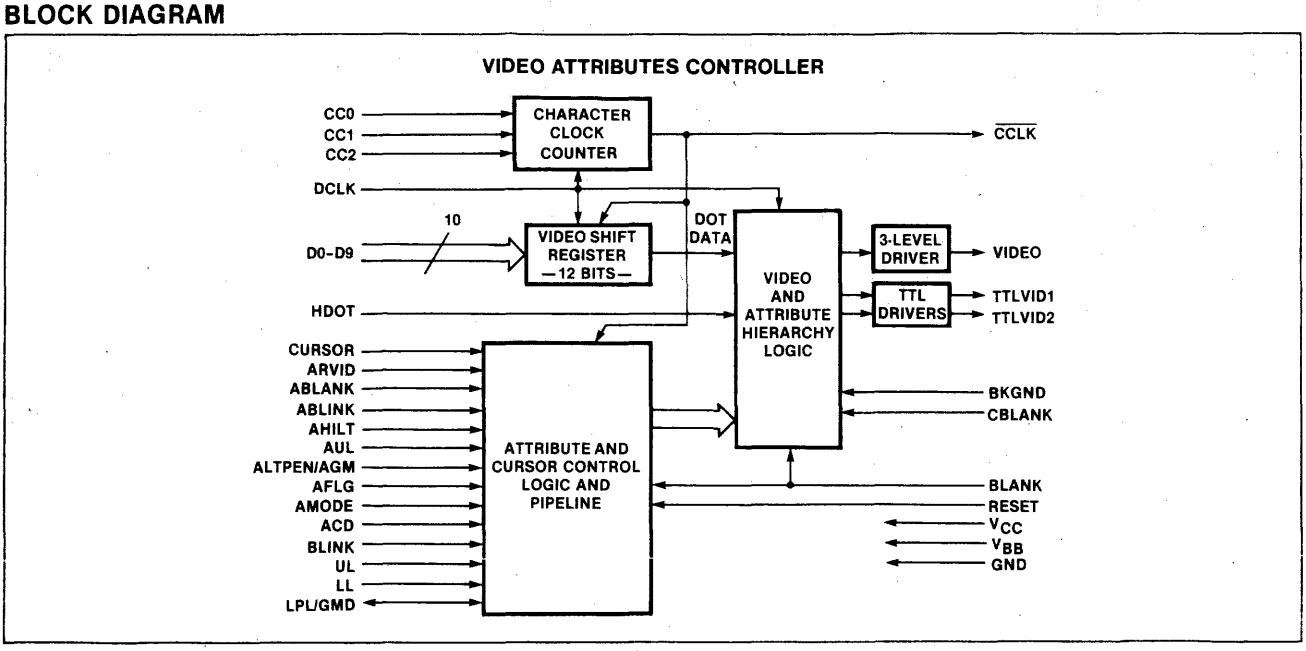

© IC MASTER 1984

ADVANCED VIDEO DISPLAY CONTROLLER (AVDC) SCN2674

DESCRIPTION

The Signetics SCN2674 Advanced Video Display Controller (AVDC) is a programmable device designed for use in CRT terminals and display systems that employ raster scan techniques. The AVDC generates the vertical and horizontal timing signals necessary for the display of interlaced or non-interlaced data on a CRT monitor. It provides consecutive addressing to a user specified display buffer memory domain and controls the CPU-display buffer interface for various buffer configuration modes. A variety of operating modes, display formats, and timing profiles can be implemented by programming the control registers in the AVDC.

A minimum CRT terminal system configuration consists of an AVDC, an SCN2671 Keyboard and Communication Controller (PKCC), an SCN2670 Display Character and Graphics Generator (DCGG), an SCB2675 Color/Monochrome Attributes Controller (CMAC), a single chip microcomputer such as the 8048, a display buffer RAM, and a small amount of TTL for miscellaneous address decoding, interface, and control. Typically, the package count for a minimum system is between 15 and 20 devices; system complexity can be enhanced by upgrading the microprocessor and expanding via the system address and data busses.

FEATURES

- 4MHz character rate
- 1 to 256 characters per row
- 1 to 16 raster lines per character row
- 1 to 128 character rows per frame
- Bit mapped graphics mode
- Programmable horizontal and vertical sync generators
  - RS170 compatible sync
- Interlaced or non-interlaced operation
- Up to 64K RAM addressing for multiple page operation
- Readable, writable and incrementable cursor
  - Programmable cursor size and blink
- AC line lock
- Automatic wraparound of RAM
- Automatic split screen
- Automatic bidirectional soft scrolling
  - Programmable scan line increment
- Row table addressing mode
- Double height tops and bottoms
- Double width control output
- Selectable buffer interface modes
- Dynamic RAM refresh
- Completely TTL compatible
- Single +5 volt power supply
- Power on reset circuit

APPLICATIONS

- CRT terminals
- Word processing systems
- Small business computers
- Home computers

PIN CONFIGURATION

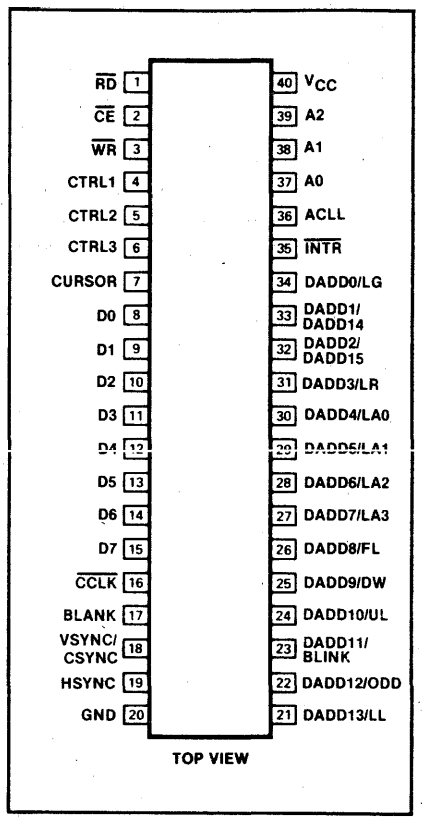

BLOCK DIAGRAM

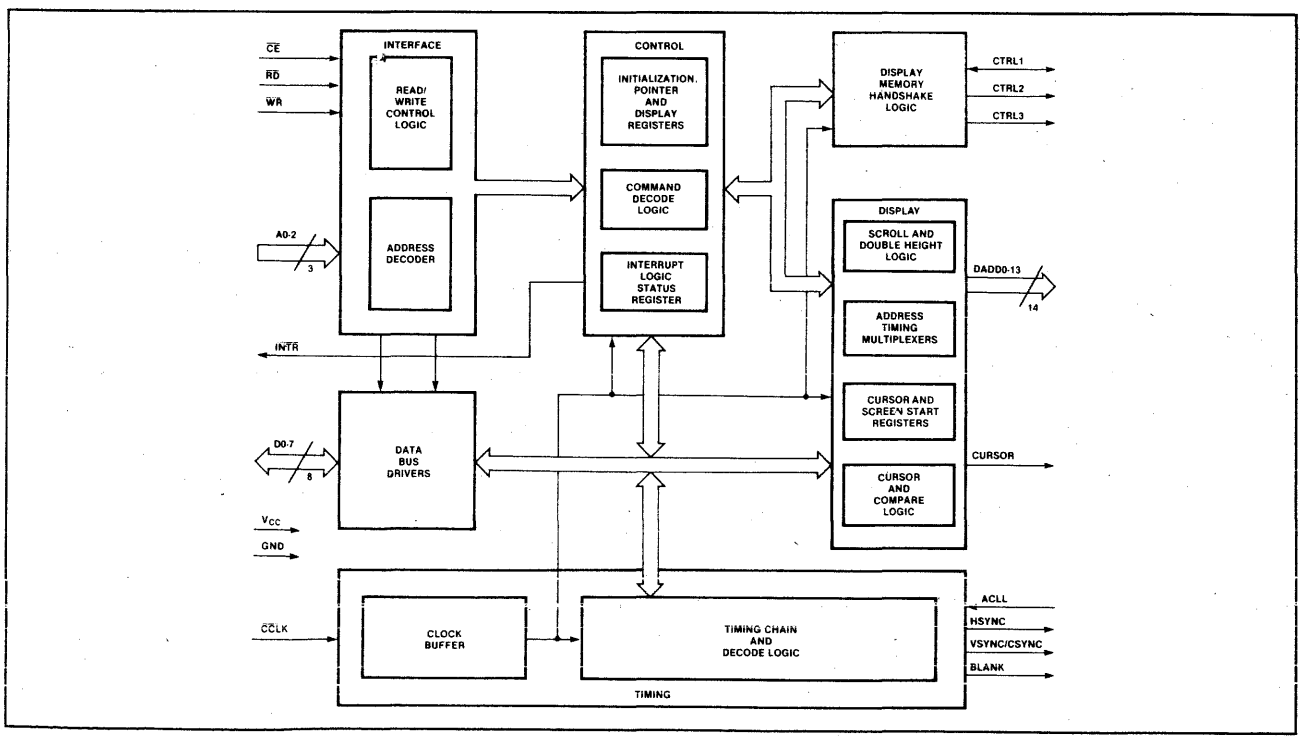

© IC MASTER 1984

COLOR/MONOCHROME ATTRIBUTES CONTROLLER (CMAC) SCB2675

DESCRIPTION

The Signetics SCB2675 Color/Monochrome Attributes Controller (CMAC) is a bipolar LSI device designed for CRT terminals and display systems that employ raster scan techniques. It contains a programmable dot clock divider to generate a character clock, a high speed shift register to serialize input dot data into a video stream, latches and logic to apply visual attributes to the resulting display, and logic to display a cursor on the display.

The CMAC provides control of visual attributes on a character by character basis for two operating modes: monochrome and color. The monochrome mode provides reverse video, blank, highlight and two general purpose user definable attributes. In this mode, the display characters can be specified to appear on either a light or dark screen background. Retrace video suppression can be automatically or externally controlled. The color mode provides eight colors for foreground (character) video and eight colors for background video together with a luminance output for external color set selection or to simultaneously drive a monochrome monitor. Additionally, both modes provide double width, underline, blink, dot stretching and dot width attributes. In monochrome mode, the SCB2675 emulates the attribute characteristics of Digital Equipment Corporation's VT100 terminal.

The horizontal dot frequency is the basic timing input to the CMAC. This clock is divided internally to provide a character clock output for system synchronization. Up to ten bits of dot data are parallel loaded into the video shift register on each character boundary. The two TTL video data outputs in monochrome mode are encoded to provide four video intensities (black, gray, white and highlight). The video data in color mode is encoded to provide eight foreground colors and shifted out on three TTL outputs, together with the luminance output.

FEATURES

- **25 and 18MHz video dot rate versions***
- **Four video intensities encoded on two TTL outputs (monochrome mode)**
- **Eight foreground and background colors encoded on three TTL outputs (color mode)**
- **Internally latched character attributes:**
  - **— Reverse video**
  - **— Blank**
  - **— Blink**
  - **— Underline**
  - **— Highlight**
  - **— Two general purpose**
  - **— Eight foreground colors**
  - **— Eight background colors**
  - **— Dot width control**
  - **— Double width characters**
- **VT100 compatible attributes**
- **Reverse video cursor with optional white cursor in color mode**
- **Up to 10 dots per character**
- **Light or dark background in monochrome mode**
  - **— Automatic retrace blanking**
- **Programmable dot stretching**
- **Compatible with SCN2674 AVDC and SCN2670 DCGG**
- **TTL compatible**
- **40-pin dual in-line package**

APPLICATIONS

- **CRT terminals**
- **Word processing systems**
- **Small business computers**

*For faster versions consult factory.

PIN CONFIGURATION

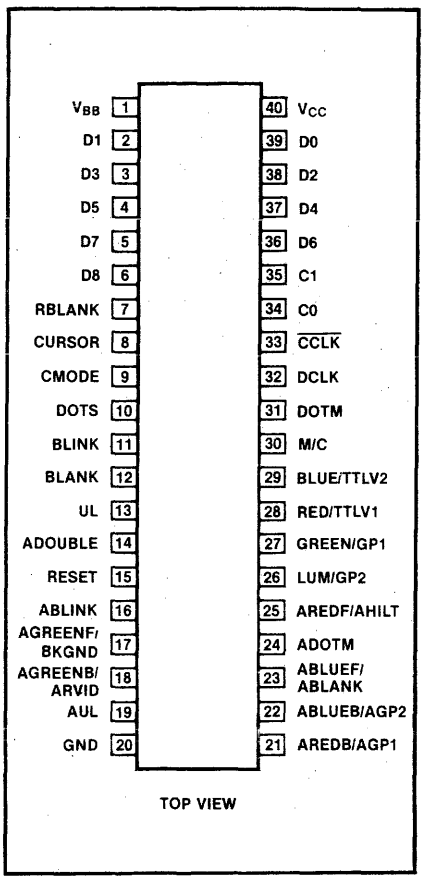

BLOCK DIAGRAM

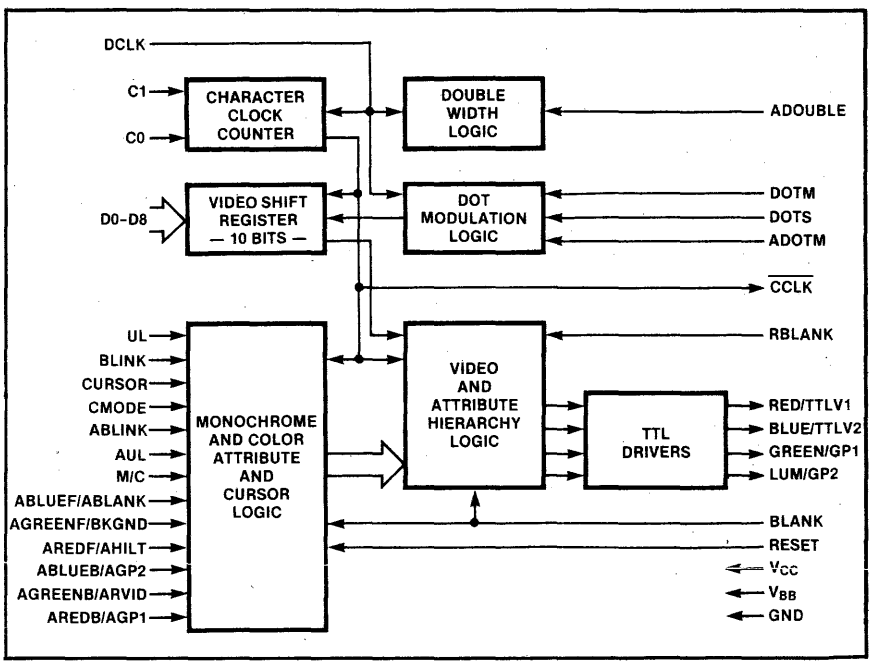

© IC MASTER 1984

VIDEO ATTRIBUTES CONTROLLER (VAC)

SCB2677

DESCRIPTION

The Signetics 2677A and 2677B Video Attributes Controllers (VAC) are bipolar LSI devices designed for CRT terminals and display systems that employ raster scan techniques. Each contains a high speed video shift register, field and character attributes logic, attribute latch, cursor format logic and half dot shift control.

The VAC provides control of visual attributes on a field or character by character. Internal logic preserves field attribute data from character row to character row so that an attribute byte is not required at the beginning of each row. The 2677B provides for reverse video, blank (non-display), blink, underline and highlight attributes and a graphics mode attribute to work in conjunction with the Signetics 2670 Display Character and Graphics Generator (DCGG). The 2677A substitutes a strike-thru attribute for the graphics attribute.

The horizontal dot frequency is the basic timing input to the VAC. Internally, this clock is divided down to provide a character clock output for system synchronization. Up to ten bits of video dot data are parallel loaded into the video shift register on each character boundary. The video data is encoded to three levels of intensity (black, gray and white) and output on two TTL outputs. Light or dark screen background may be specified.

FEATURES

- **25MHz video dot rate**
- **Three level encoded TTL video outputs**
- **Character/field attribute logic**
  Reverse video
  Character blank
  Character blink
  Underline
  Highlight
- **Strike-thru or graphics control**
- **Field attributes extend from row to row**
- **Light or dark field**
- **Cursor reverse video logic**
- **Up to 10 dots per character**
- **Retrace blanking for light field**
- **Optional field graphics control output**
- **High speed bipolar design**
- **40 pin dual in-line package**
- **TTL compatible**
- **Compatible with Signetics 2672 PVTC, 2674 AVDC and 2670 DCGG**

APPLICATIONS

- **CRT terminals**
- **Word processing systems**
- **Small business computers**

PIN CONFIGURATION

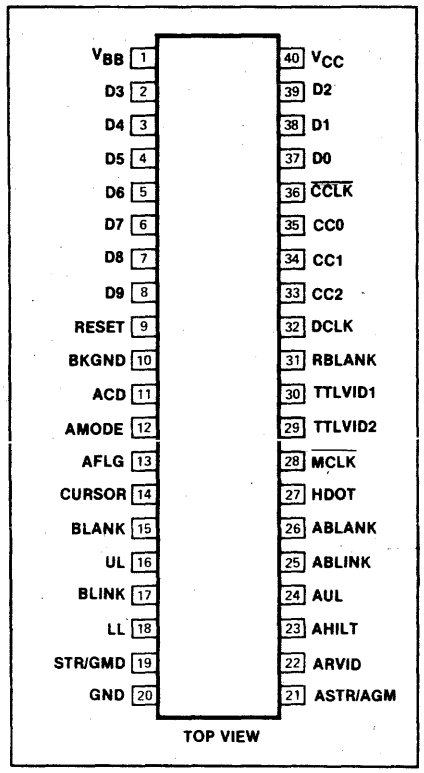

BLOCK DIAGRAM

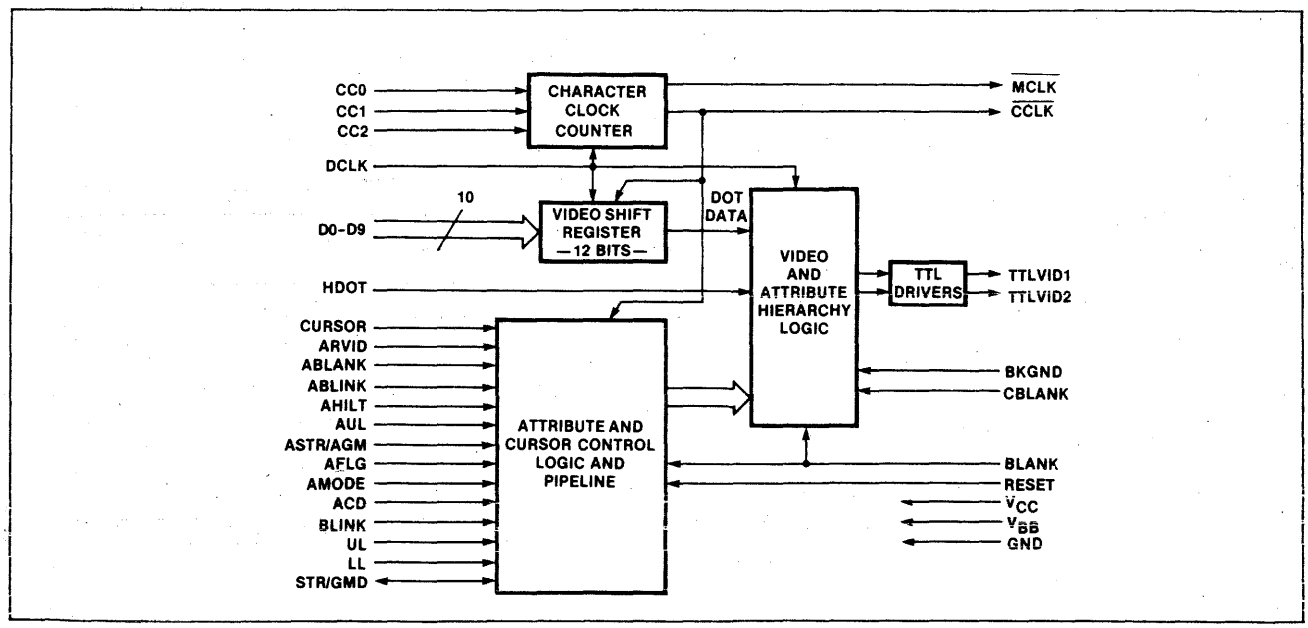

© IC MASTER 1984

DESCRIPTION

The Signetics SCN80 Series microcomputers are self-contained, 8-bit processors which contain the system timing, control logic, RAM data memory, ROM program memory (8048/49/50 only), and I/O lines necessary to implement dedicated control functions. All SCN80 Series devices are pin and program compatible, differing only in the size of the on-board program ROM and data RAM, as follows:

TYPE	RAM SIZE	ROM SIZE
8031	128 × 8	—
8035	64 × 8	—
8039	128 × 8	—
8040	256 × 8	—
8048	64 × 8	1K × 8
8049	128 × 8	2K × 8
8050	256 × 8	4K × 8
8051	128 × 8	2K × 8

Program memory can be expanded externally up to a maximum total of 4K bytes without paging. Data memory can also be expanded externally. I/O capabilities can be expanded using standard devices or the 8243 I/O expander.

The SCN80 Series processors are designed to be efficient control processors as well as arithmetic processors. They provide an instruction set which allows the user to directly set and reset individual lines within its I/O ports as well as test individual bits within the accumulator. A large variety of branch and table look-up instructions make these processors very efficient in implementing standard logic functions. Also, special attention has been given to code efficiency. Over 70% of the instructions are a single byte long and all others are only 2 bytes long.

An on-chip 8-bit counter is provided which can count, under program control, either internal clock pulses (with a divide by 32 prescaler) or external events. The counter can be programmed to cause an interrupt on terminal count.

FEATURES

- **8-bit CPU, ROM, RAM, I/O in a 40-pin package**
- **24 quasi bidirectional I/O lines**
- **Two test inputs**
- **Internal counter/timer**
- **Single-level vectored interrupts: external, counter/timer**
- **Over 90 instructions, 70% single byte**
- **1.36μs or 2.5μs instruction cycle, all instructions one or two cycles**
- **Expandable memory and I/O**
- **Low voltage standby**
- **TTL compatible inputs and outputs**
- **Single +5V power supply**

PIN CONFIGURATION

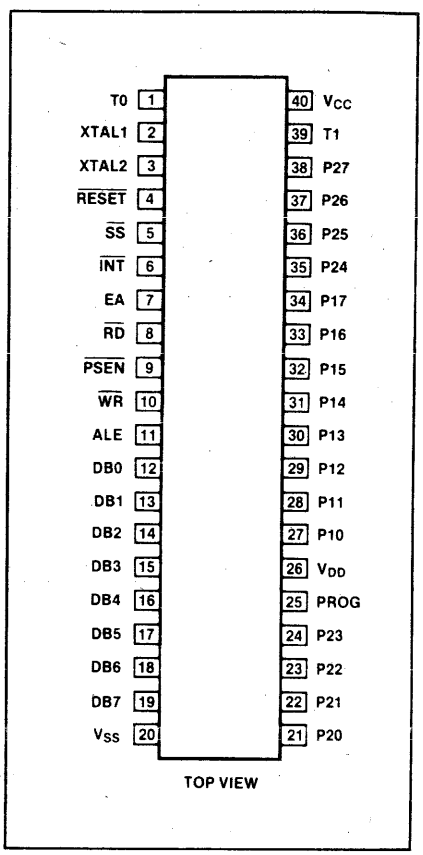

SCN8031, SCN8051 BLOCK DIAGRAM

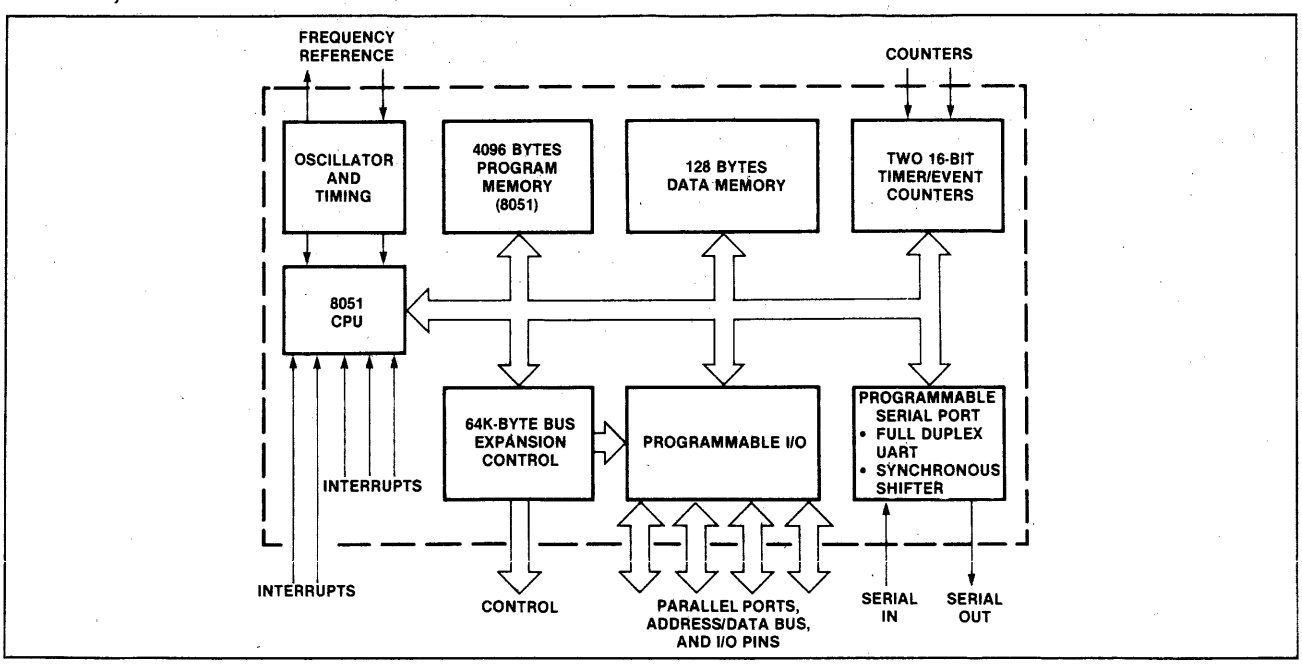

CMOS SINGLE CHIP 8-BIT MICROCOMPUTERS

SCC80 SERIES

DESCRIPTION

The Signetics SCC80 Series microcomputers are low power, CMOS versions of the popular SCN80 series NMOS equivalents. They are self-contained, 8-bit processors which contain the system timing, control logic, RAM data memory, ROM program memory (80C48/C49/C50 only), and I/O lines necessary to implement dedicated control functions. All SCC80 Series devices are pin and program compatible, differing only in the size of the on-board program ROM and data RAM, as follows:

TYPE	RAM SIZE	ROM SIZE
SCC80C48	64 × 8	1K × 8
SCC80C49	128 × 8	2K × 8
SCC80C50	256 × 8	4K × 8
SCC80C35	64 × 8	—
SCC80C39	128 × 8	—
SCC80C40	256 × 8	—

Program memory can be expanded externally up to a maximum total of 4K bytes without paging. Data memory can also be expanded externally. I/O capabilities can be expanded using standard devices or the 8243 I/O expander.

The SCC80 Series processors are designed to be efficient control processors as well as arithmetic processors. They provide an instruction set which allows the user to directly set and reset individual lines within its I/O ports as well as test individual bits within the accumulator. A large variety of branch and table look-up instructions make these processors very efficient in implementing standard logic functions. Also, special attention has been given to code efficiency. Over 70% of the instructions are a single byte long and all others are only 2 bytes long.

An on-chip 8-bit counter is provided which can count, under program control, either internal clock pulses (with a divide by 32 prescaler) or external events. The counter can be programmed to cause an interrupt on terminal count.

The CMOS design of the SCC80 Series opens new application areas that require battery operation, low power standby, wide voltage range, and the ability to maintain operation during AC power line interruptions. These applications include portable and hand-held instruments, telecommunications, consumer, and automotive.

FEATURES

- **8-bit CPU, ROM, RAM, I/O in a 40-pin package**
- **24 quasi bidirectional I/O lines**
- **Two test inputs**
- **Internal counter/timer**
- **Single-level vectored interrupts: external, counter/timer**
- **Over 90 instructions, 70% single byte**
- **1.36μs instruction cycle, all instructions one or two cycles**
- **Expandable memory and I/O**
- **Low voltage standby**
- **TTL compatible inputs and outputs**
- **Single +5V power supply**
- **Pin-to-pin compatible with SCN80 Series**
- **Ability to maintain operation during AC power line interruptions**
- **Exit Idle mode with an external or internal interrupt signal**
- **Battery operation**
- **3 power consumption selections**
  - **Normal operation: 15mA @ 11MHz @ 6V**
  - **Idle mode: 500μA @ 11MHz @ 6V**
  - **Power down: 10μA @ 2.0V**
- **11MHz, TTL compatible operation; V_{CC} = 5V ± 10%**
  CMOS compatible operation; V_{CC} = 5V ± 20%

PIN CONFIGURATION

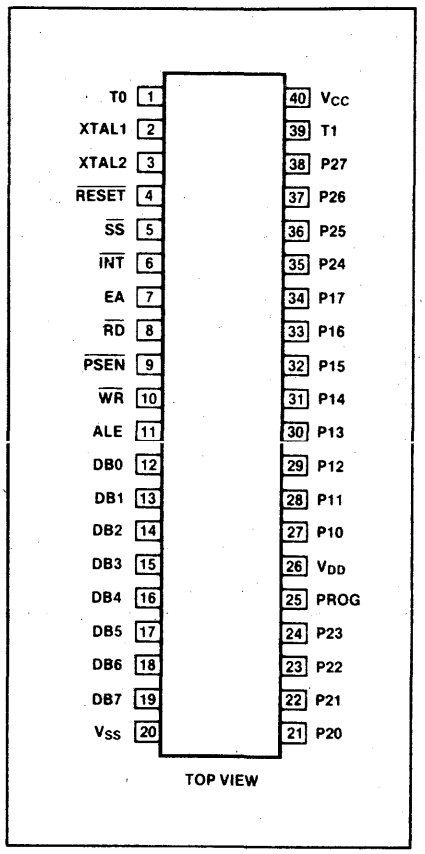

© IC MASTER 1984

SINGLE CHIP 8-BIT MICROCOMPUTERS

SCN8031, SCN8051

DESCRIPTION

The Signetics SNC8031/8051 is a stand-alone, high-performance single-chip computer fabricated with Signetics' highly-reliable +5 volt, depletion-load, N-Channel, silicon-gate MOS technology and packaged in a 40-pin DIP. It provides the hardware features, architectural enhancements and new instructions that are necessary to make it a powerful and cost effective controller for applications requiring up to 64K bytes of program memory and/or up to 64K bytes of data storage.

The SCN8051 contains a 4K × 8 read-only program memory; a 128 × 8 read/write data memory; 32 I/O lines; two 16-bit timer/counters; a five-source, two-priority-level, nested interrupt structure; a serial I/O port for either multi-processor communications, I/O expansion, or full duplex UART; and on-chip oscillator and clock circuits. The SCN8031 is identical, except that it lacks the program memory. For systems that require extra capability, the SCN8051 can be expanded using standard TTL compatible memories and byte oriented peripheral controllers.

The SCN8051 microcomputer, like its SCN8048 predecessor, is efficient both as a controller and as an arithmetic processor. It has extensive facilities for binary and BCD arithmetic and excels in bit-handling capabilities. Efficient use of program memory results from an instruction set consisting of 44% one-byte, 41% two-byte, and 15% three-byte instructions. With a 12MHz crystal, 58% of the instructions execute in 1μs, 40% in 2μs and multiple and divide require only 4μs. Among the many instructions added to the standard SCN8048 instruction set are multiply, divide, subtract and compare.

FEATURES

- **4K × 8 ROM (SCN8051)**
- **128 × 8 RAM**
- **Four 8-bit ports, 32 I/O lines**
- **Two 16-bit timer/event counters**
- **High-performance full-duplex serial channel**
- **External memory expandable to 128K**
- **Boolean processor**
- **SCN80 series architecture enhanced with:**
  - **Non-paged jumps**
  - **Direct addressing**
  - **Four 8-register banks**
  - **Stack depth up to 128-bytes**
  - **Multiply, divide, subtract, compare**
- **Most instructions execute in 1μs**
- **4μs multiply and divide**

PIN CONFIGURATION

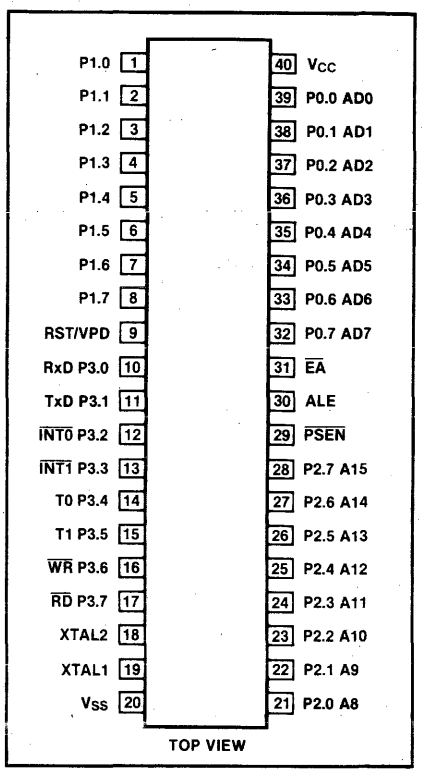

BLOCK DIAGRAM

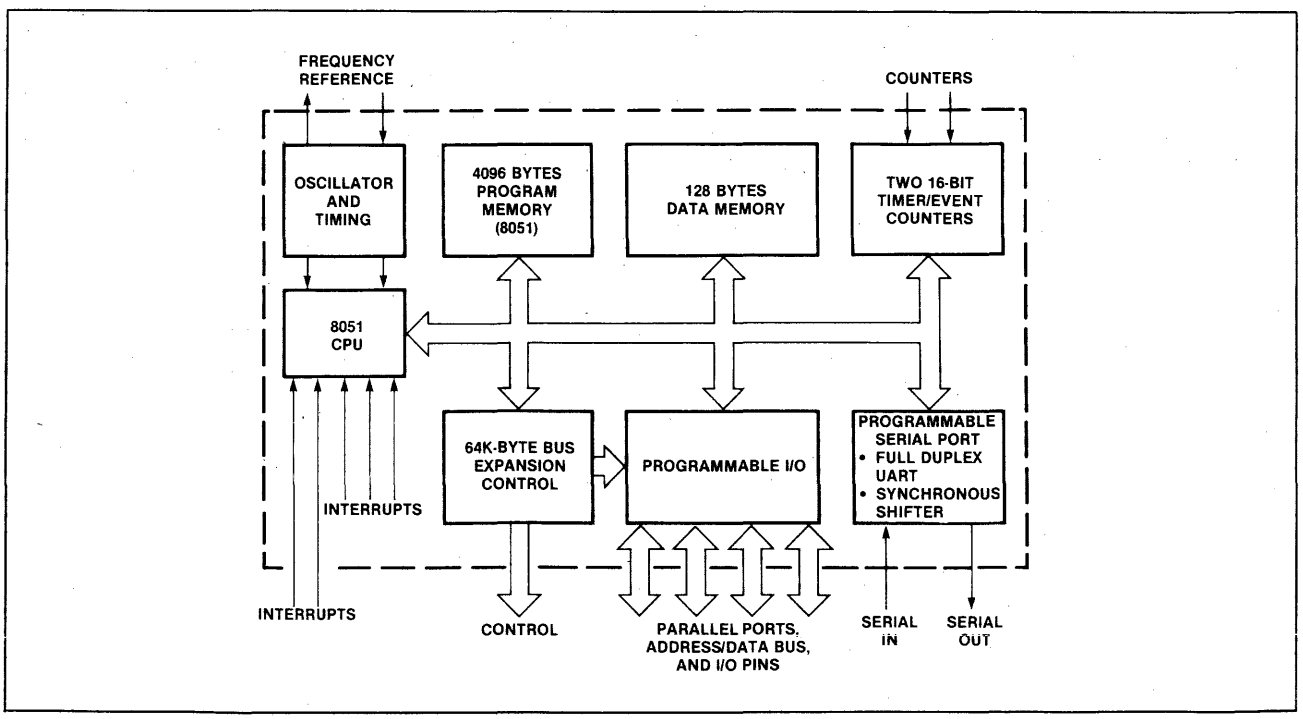

© IC MASTER 1984

CMOS SINGLE CHIP 8-BIT MICROCOMPUTERS SCC80C31, SCC80C51

DESCRIPTION

The Signetics SCC80C31/80C51 is a stand-alone, high performance single-chip computer fabricated with Signetics' highly-reliable CMOS technology and packaged in a 40-pin DIP. It provides the hardware features, architectural enhancements and new instructions that are necessary to make it a powerful and cost effective controller for applications requiring up to 64K bytes of program memory and/or up to 64K bytes of data storage.

The SCC80C51 contains a 4K × 8 read-only program memory; a 128 × 8 read/write data memory; 32 I/O lines; two 16-bit timer/counters; a five-source, two-priority-level, nested interrupt structure; a serial I/O port for either multi-processor communications, I/O expansion, or full duplex UART; and on-chip oscillator and clock circuits. The SCC80C31 is identical, except that it lacks the program memory. For systems that require extra capability, the SCC80C51 can be expanded using standard TTL compatible memories and byte oriented peripheral controllers.

The SCC80C51 microcomputer, like its SCC80C48 predecessor, is efficient both as a controller and as an arithmetic processor. It has extensive facilities for binary and BCD arithmetic and excels in bit-handling capabilities. Efficient use of program memory results from an instruction set consisting of 44% one-byte, 41% two-byte, and 15% three-byte instructions. With a 12MHz crystal, 58% of the instructions execute in 1μs, 40% in 2μs and multiple and divide require only 4μs. Among the many instructions added to the standard SCC80C48 instruction set are multiply, divide, subtract and compare.

FEATURES

- **4K × 8 ROM (SCN8051)**
- **128 × 8 RAM**
- **Four 8-bit ports, 32 I/O lines**
- **Two 16-bit timer/event counters**
- **High-performance full-duplex serial channel**
- **External memory expandable to 128K**
- **Boolean processor**
- **SCN80 series architecture enhanced with:**
  - **Non-paged jumps**
  - **Direct addressing**
  - **Four 8-register banks**
  - **Stack depth up to 128-bytes**
  - **Multiply, divide, subtract, compare**
- **Most instructions execute in 1μs**
- **4μs multiply and divide**

PIN CONFIGURATION

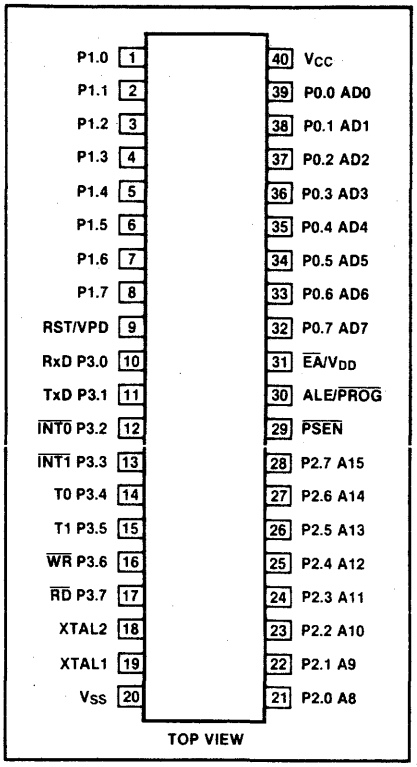

BLOCK DIAGRAM

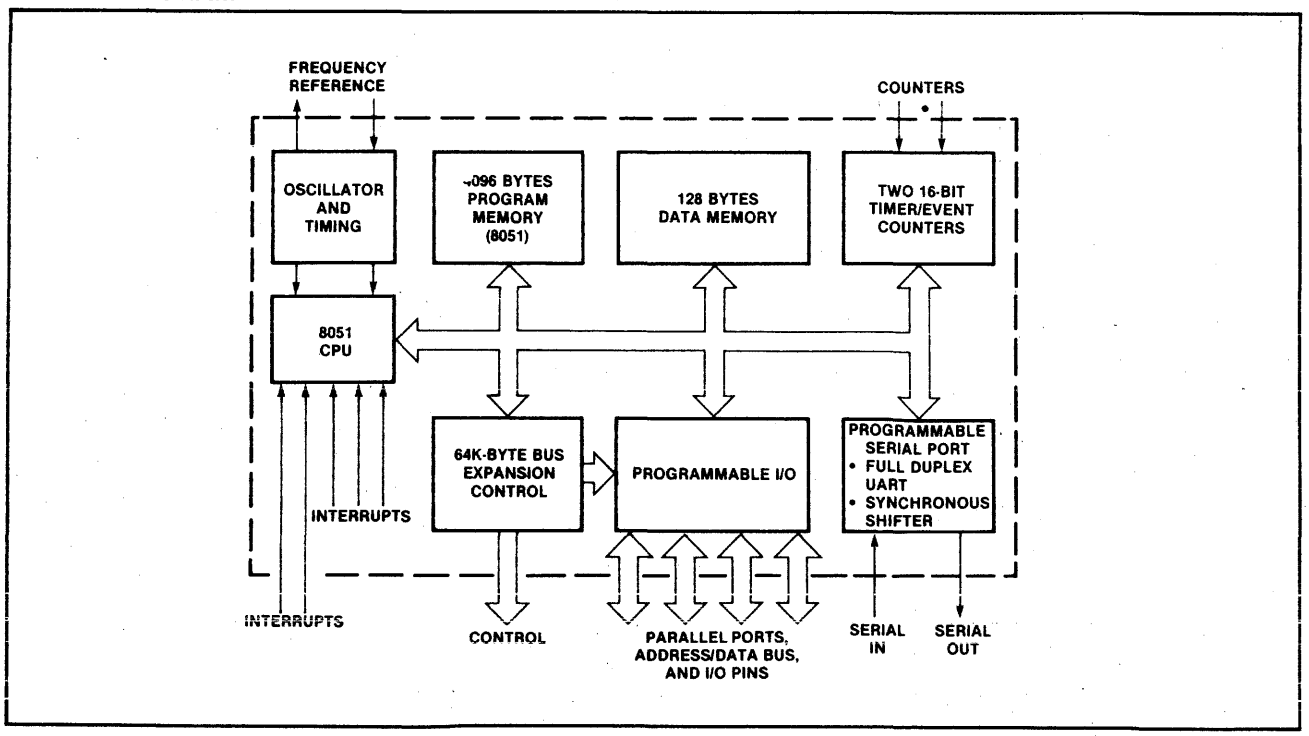

© IC MASTER 1984

TODAY AND TOMORROW COMPONENTS

TODAY

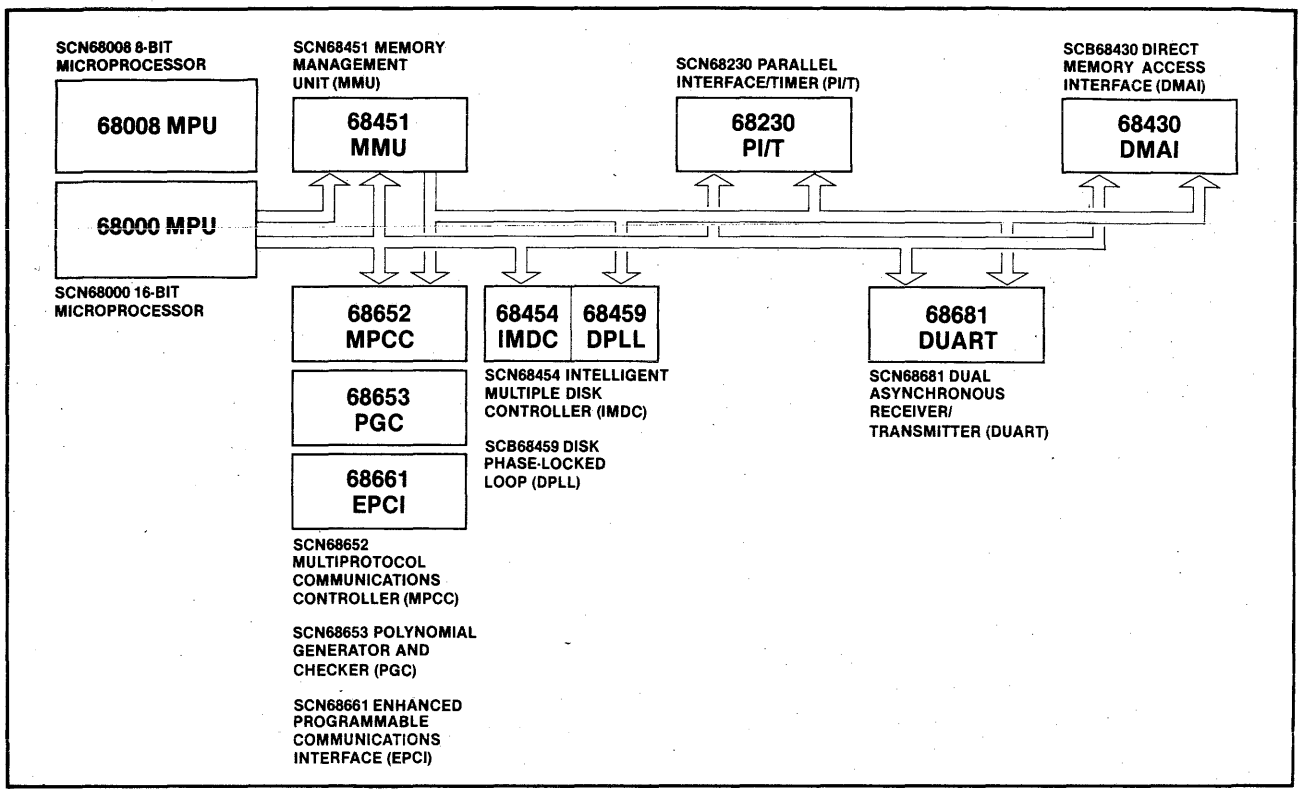

TOMORROW

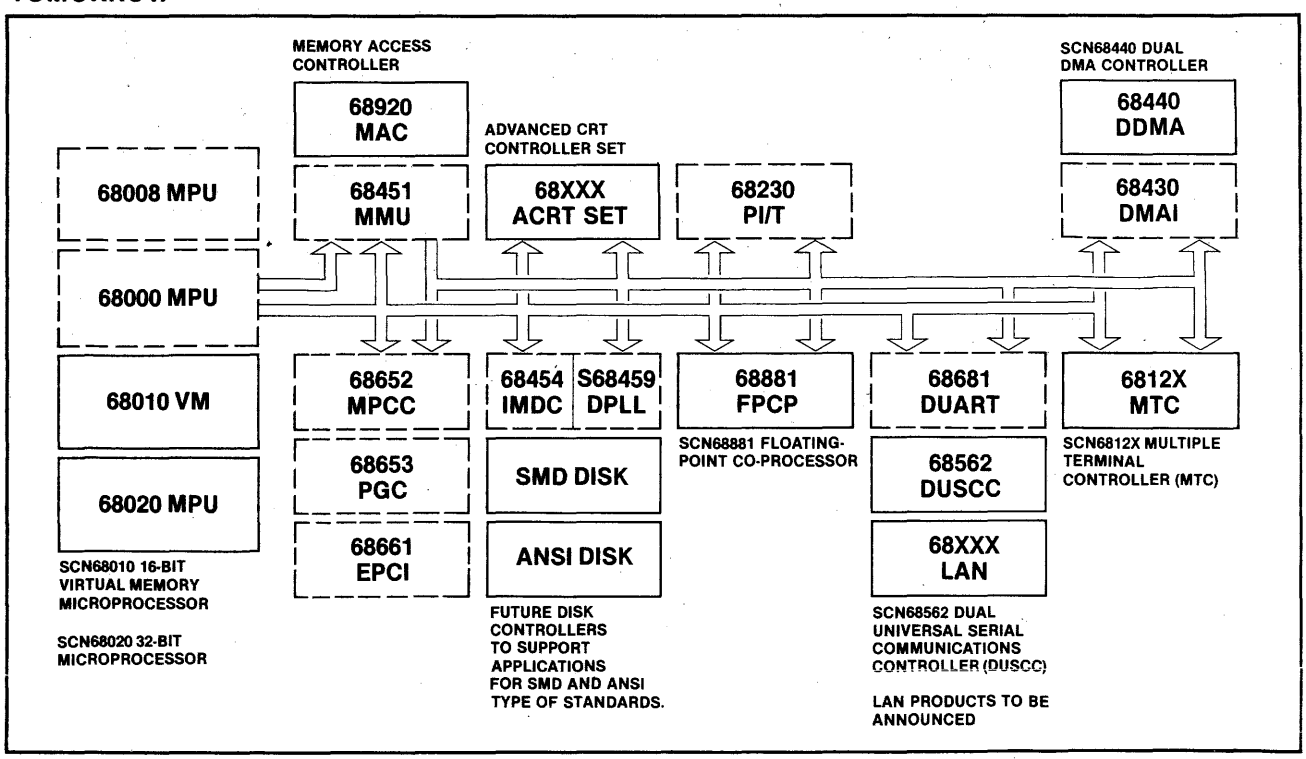

© IC MASTER 1984

16-BIT MICROPROCESSOR — SCN68000 SERIES

DESCRIPTION

The Signetics SCN68000 combines state-of-the-art semiconductor technology and advanced circuit design techniques with computer sciences to achieve an architecturally advanced 16-bit microprocessing unit. As shown in the programming model, figure 1, the SCN68000 offers seventeen 32-bit registers in addition to a 32-bit program counter and a 16-bit status register. The first eight registers (D0–D7) are used as data registers for byte (8-bit), word (16-bit), and long word (32-bit) data operations. The second set of seven registers (A0–A6) and the system stack pointer can be used as software stack pointers and base address registers. In addition, these registers can be used for word and long word address operations. All 17 registers can be used as index registers.

FEATURES

- **32-bit data and address registers**
- **16 megabyte direct addressing range**
- **56 powerful instruction types**
- **Operations on five main data types**
- **Memory mapped I/O**
- **14 addressing modes**
- **Multilevel interrupt structure**
- **Signed and unsigned multiply and divide**
- **User and supervisor modes**
- **Support for high level languages**
- **Testing and debugging support**

16-BIT MICROPROCESSOR WITH 8-BIT BUS — SCN68008

DESCRIPTION

The SCN68008 is a member of the S68000 Family of advanced microprocessors. This device allows the design of cost effective systems using 8-bit data buses while providing the benefits of a 32-bit microprocessor architecture. The performance of the SCN68008 is greater than any 8-bit microprocessor and superior to several 16-bit microprocessors.

The resources available to the SCN68008 user consist of the following:

- 17 32-bit data and address registers
- 56 basic instruction types
- Extensive exception processing
- Memory mapped I/O
- 14 addressing modes
- Complete code compatibility with the SCN68000

A system implementation based on an 8-bit data bus reduces system cost in comparison to 16-bit systems due to a more effective use of components and the fact that byte-wide memories and peripherals can be used much more effectively. In addition, the non-multiplexed address and data buses eliminate the need for external demultiplexers, thus further simplifying the system.

The SCN68008 has full code compatibility (source and object) with the SCN68000 which allows programs to be run on either MPU depending on performance requirements and cost objectives.

The programmer's model is identical to that of the SCN68000, with seventeen 32-bit registers, a 32-bit program counter, and a 16-bit status register. The first eight registers (D0-D7) are used as data registers for byte (8-bit), word (16-bit), and long word (32-bit) operations. The second set of seven registers (A0-A6) and the system stack pointer (A7) may be used as software stack pointers and base address registers. In addition, the registers may be used for word and long word operations. All of the 17 registers may be used as index registers.

The 1-megabyte non-segmented linear address space of the SCN68008 allows large modular programs to be developed and executed efficiently. A large linear address space allows program segment sizes to be determined by the application rather than forcing the designer to adopt an arbitrary segment size without regard to his individual requirements.

Exception processing allows the SCN68008 to handle interrupts, address errors, unimplemented instructions, and other commonly encountered exceptions while maintaining absolute system integrity. The exception processing state is associated with interrupts, trap instructions, tracing, and other exceptional conditions. An exception may be generated internally by an instruction or by an unusual condition occurring during program execution. Exception processing provides an efficient context switch to enable the processor to handle unusual conditions without degrading system integrity.

The addressing modes, instruction set and instruction set variations tables are the same as the SCN68000.

FEATURES

- **32-bit data and address registers**
- **1-megabyte direct addressing range**
- **56 powerful instruction types**
- **Operations on five main data types**
- **Memory mapped I/O**
- **14 addressing modes**
- **Source and object compatible with SCN68000**
- **48-pin DIP**

VIRTUAL MEMORY PROCESSOR — SCN68010

DESCRIPTION

The SCN68010 is an SCN68000 with enhancements which make it an ideal processor in virtual memory systems or to operate as a true virtual machine. Many of these changes concern the operation of the processor when a faulty bus cycle takes place.

The most significant change to the SCN68000 in the SCN68010 virtual machine (VM) is the facility for complete, controlled storing of the internal processor state upon receipt of a bus error signal. This state can later be recovered by the processor for continuation of the faulted operation after the faulty condition has been corrected. Additionally, the SCN68010 may be used as a virtual processor with one governing operating system handling the supervisory chores of any number of operating systems (OS). This also allows virtual input/output to be supported. A third major change is the allowance for a delayed bus error signal to abort a bus cycle. This bus relaxation allows error detection and correction (EDAC) to be performed with the SCN68010 without impacting the execution time of instructions when no error occurs.

Some improvements have been made in the SCN68010 instruction set over those supplied in the SCN68000. These include not only additional instructions but also improved execution times.

32-BIT MICROPROCESSOR — SCN68020

DESCRIPTION

The SCN68020 is another in a series of S68000 high performance 16/32-bit microprocessors from Signetics. The processor retains compatibility with the SCN68008, SCN68000 and the SCN68010.

The SCN68020 is the first true 32-bit microprocessor. Its power allows its use in any application, even those previously limited to mainframes. Just as the SCN68000 set the industry standard for 16-bit microprocessor performance, the SC68020 will be the standard for all 32-bit systems.

In addition to its 32-bit architecture, the SCN68020 provides instruction set enhancements (including floating point operations), co-processor operations, improved operating system support, a cache for performance advantages, and innovative techniques to improve bus efficiency.

The SCN68020 is designed to accommodate S68000 co-processors such as the SCN68881 through a special co-processor interface and using new co-processor commands. Use of co-processors extends the capability of an S68000 system beyond the limits of a single processing element to numerous tightly-coupled processing units, each of which may be tailored to a particular data type, task, performance, etc. To further enhance special operations in an S68000 system, an instruction cache is included in the SCN68020. This cache will allow short repeated instruction streams to execute more quickly while leaving the external buses available to other processors.

The SCN68020 will execute all of the SCN68000/10 instructions. Some of these instructions in the SCN68020 have greater capability, additional data types, or execute faster. These enhancements provide a more well rounded set of instructions, including the 32-bit operations. The shift and rotate instructions in the SCN68020 execute much quicker. 32-bit operands, displacements, and limits are extended to the Check, Link, Unlink, Byte extend, Multiply, and Divide instructions.

Some additional instructions have been included which will simplify programming and improve performance in operating systems, compilers, and new data structures. These include Block Move to Alternate Address Space (MOVESB) for the operating system to move around parameter blocks, and a more sophisticated Enter and Leave operation for procedure transitions. Moving around variously sized bit fields will be facilitated with MOVEF instructions, and converting between ASCII and BCD will be provided in PACK and UNPK.

© IC MASTER 1984

PARALLEL INTERFACE/TIMER SCN68230

DESCRIPTION

The SCN68230 Parallel Interface/Timer (PI/T) provides versatile double buffered parallel interfaces and an operating system oriented timer to S68000 systems. The parallel interfaces operate in unidirectional or bidirectional modes, either 8 or 16 bits wide. In the unidirectional modes, an associated data direction register determines whether the port pins are inputs or outputs. In the bidirectional modes, the data direction registers are ignored and the direction is determined dynamically by the state of four handshake pins. These programmable handshake pins provide an interface flexible enough for connection to a wide variety of low, medium, or high speed peripherals or other computer systems. The PI/T ports allow use of vectored or autovectored interrupts, and also provide a DMA request pin for connection to direct memory access controllers. The PI/T timer contains a 24-bit counter and a 5-bit prescaler. The timer can be clocked by the system clock (PI/T CLK pin) or by an external clock (TIN pin), and a 5-bit prescaler can be used. It can generate periodic interrupts, a square wave or a single interrupt after a programmed time period. Also it can be used for elapsed time measurement or as a device watchdog. Table 1 is a summary of the input and output signals and Figure 1 shows the functional pin assignments. Figure 2 is a PI/T system block diagram.

FEATURES

- S68000 bus compatible
- Port modes include:
  Bit I/0
  Unidirectional 8-bit and 16-bit
  Bidirectional 8-bit and 16-bit
- Selectable handshaking options
- 24-Bit programmable timer
- Software programmable timer modes
- Contains interrupt vector generation logic
- Separate port and timer interrupt service requests
- Registers are read/write and directly addressable
- Registers are addressed for MOVEP (move peripheral) and DMAC compatibility

DUAL DMA CONTROLLER SCN68440

DESCRIPTION

The SCN68440 Dual Channel Direct Memory Access Controller (DMMAC) is designed to complement the performance and architectural capabilities of S68000 Family microprocessors by moving blocks of data in a quick, efficient manner with minimum intervention by the host processor.

The DDMAC increases the throughput performance of a microprocessor system by increasing the throughput by moving blocks of data between memory and device, device and memory, and memory to memory quicker than a processor. This allows the processor to perform other tasks while the DDMAC is moving the blocks of data. A block of data consists of a sequence of byte or word operands where the length of the block is determined by the transfer count. A channel operation may involve several blocks of data between memory and device.

A DDMAC channel operation consists of an initialization phase, a transfer phase, and a termination phase. In the initialization phase (MPU mode of operation) the host processor loads the registers of the DDMAC with control information and address pointers and then starts the channel. During the transfer phase (DMA mode of operation) the DDMAC accepts requests for operand transfers and provides addressing and bus controls for the transfers. The termination phase occurs after the operation is complete, when the DDMAC reports the status of the operation. If no further transfer operations are required, the DDMAC enters an IDLE mode of operation.

Requests may be externally generated by a device or internally generated by the auto-request mechanism of the DDMAC. Auto-requests may be generated either at the maximum rate of four megabytes per second, where the channel always has a request pending, or at a limited rate determined by selecting a proportion of the bus bandwidth. External requests can be either burst requests or cycle steal requests that are generated by the request line associated with each channel.

MEMORY MANAGEMENT UNIT SCN68451

DESCRIPTION

The SCN68451 Memory Management Unit (MMU) provides address translation and protection of the 16-megabyte addressing space of the SCN68000. The MMU can be accessed by any potential bus master, such as instruction set processors, or DMA controllers. Each bus master (or processor) in the SCN68000 family provides a function code and an address during each bus cycle. The function code specifies an address space while the address specifies a location within that address space. The function codes are provided by the SCN68000 to distinguish between program and data spaces as well as supervisor and user spaces. This separation of address spaces provides the basis of protection in an operating system. By simplifying the programming model of the address space, the MMU also increases the reliability of a complex multiprocess system.

FEATURES

- Separates address spaces of system and user resources
- Provides write protection
- Increases system reliability
- Provides efficient memory allocation
- Allows interprocess communication through shared resources
- Simplifies programming model of address space
- Minimizes operating system overhead with quick context switches
- 32 segments with variable segment sizes
- Multiple MMU system capability
- Supports both paging and segmentation
- DMA compatible
- Provides virtual memory support
- SCN68000 bus compatible

INTELLIGENT MULTIPLE DISK CONTROLLER (IMDC) SCN68454

DESCRIPTION

The SCN68454 Intelligent Multiple Disk Controller (IMDC) is a single chip MOS-VLSI device capable of simultaneously controlling up to four Winchester type rigid disk drives or floppy disk drives in any combination. Advanced hardware and software features make it ideally suited to perform disk drive control functions in single processor, multi-processor and/or multiprocessing systems.

The IMDC structure utilizes two sophisticated processing interfaces—a host interface and a disk drive interface. The host interface is compatible with the S68000 bus. Included in this interface is a complete DMA controller capable of handling all data transfers between the host system memory and the drives connected to the IMDC. The disk drive interface is designed to conform to different drive interface requirements, thus giving the IMDC the ability to control a variety of drive types. With a minimum of external hardware, it can control any drive that has an SA1000 or Seagate ST500 drive interface standard. The IMDC also provides direct support for double density track formats and standard IBM track formats for floppy disks.

Data transfers on the host data bus can be programmed for either 8 or 16-bit parallel operation. The disk drive interface handles a serial data rate up to 10Mbits per second, a speed which accommodates the next generation of drives.

Programming of the IMDC is performed through a powerful set of high level instructions. A user can create the required drive interface by simply altering the content of drive control memory storage areas. Included in the instruction set are commands to format disks to user specification, multiple sector read/write operations with implied seeks, diagnostics, and programmable real time record processing.

The IMDC circuitry is fully TTL compatible, operates with a single +5 volt power supply and is contained in a 48 pin DIP package.

FEATURES

- Combined control for rigid disk and floppy disk
  - Any combination up to 4 drives
  - Built-in logic for floppy disk back-up
- Winchester disk interface (SA1000 and ST500)
- Supports MFM and FM data formats
- Soft sector and hard sector
- Supports programmable rigid disk and standard IBM formats
- Supports linked, mapped and sequential file structures
- Multiple sector read/write
- Implied seek
- Error correction up to 11 bits
- 32-bit and 40-bit ECC codes, programmable polynomials
- Supports computer generated error correction code
- Control signals for external phase locked loop
- Data rate up to 10Mbits per second
- Automatic bad sector handling
- Single phase read and write clocks
- 8/16-bit data bus
- DMA control and transfer
- High level commands
  - Controls
  - Data transfer
  - Programmable real time record processing
  - Diagnostics
  - Error correction

© IC MASTER 1984

DIRECT MEMORY ACCESS INTERFACE (DMAI) SCB68430

DESCRIPTION

The SCB68430 DMAI is a single channel DMA interface circuit which is intended to complement the performance and architectural capabilities of the SCN68000 microprocessor. The DMAI functions by transferring a series of operands (data) between memory and a device: operand sizes may be byte, word, or long word. A block is a sequence of operands: the number of operands in the block is determined by a transfer count stored within the DMAI. The SCB68430 can be programmed to utilize single cycle (cycle stealing) or burst data transfers.

The DMAI provides two interfaces. The microprocessor interface is fully compatible with the SCN68000 microprocessor. The device interface includes lines for requesting, acknowledging, controlling, and timing the data transfers.

The DMAI is a single-channel subset of other 68000 family DMA controllers. It is software compatible with the other devices and provides similar interfacing signals to both the system bus and the device.

The SCB68430 is constructed using Signetics ISL bipolar technology and is contained in a 48-pin dual-in-line package.

FEATURES

- **Single channel DMA controller**
- **Bus compatible with SCN68000 microprocessor**
- **Software compatible with 68000 family DMA controllers**
- **Single address transfers**
- **Cycle steal and burst mode operation**
- **Bus arbitration daisy chain**
- **Automatic rerun on bus error**
- **Supports SCN68000 vectored interrupts**
- **Supports 32 bit transfers on VME bus**
- **24-bit address register**
- **16-bit transfer count register**
- **16 data/address lines (multiplexed) and 7 bidirectional address lines**
- **Maximum transfer rate of 5Mbytes per second**
- **Signetics ISL bipolar technology**
- **48-pin DIP**

PIN CONFIGURATION

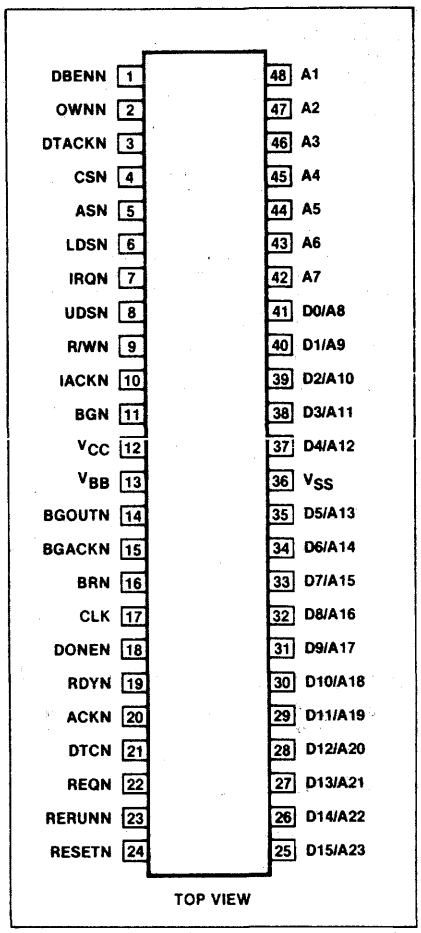

BLOCK DIAGRAM

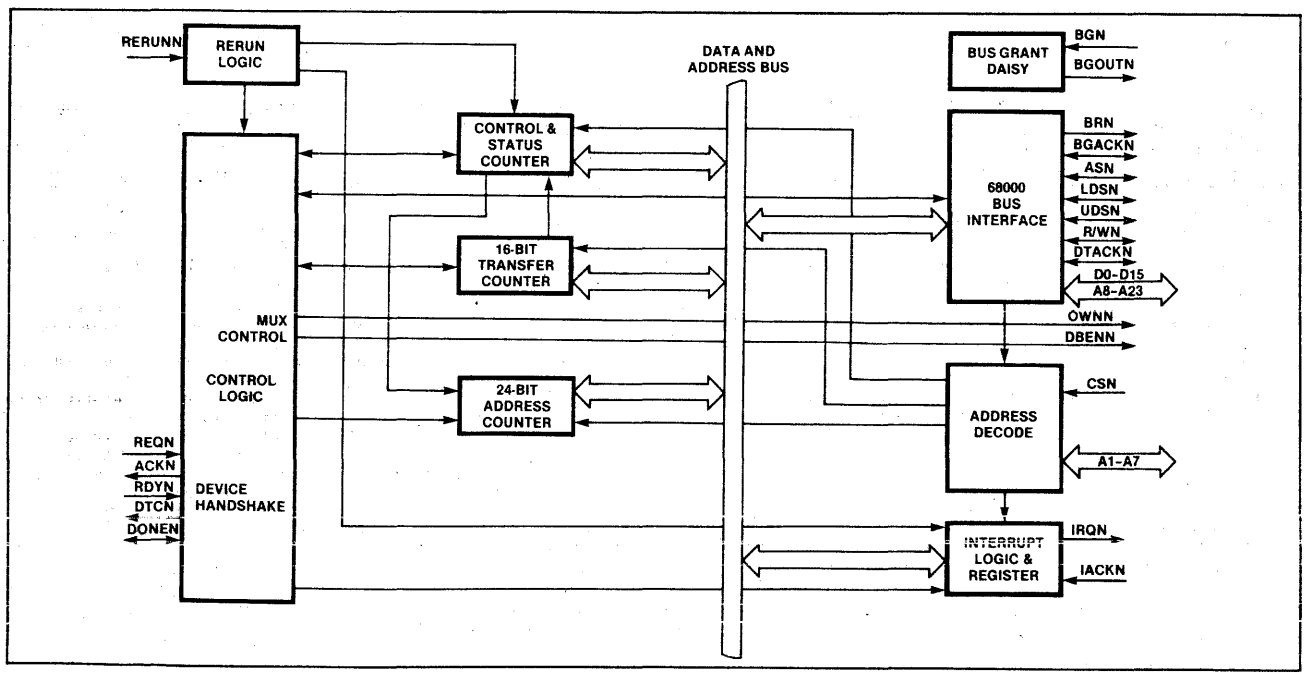

© IC MASTER 1984

DISK PHASE LOCKED LOOP (DPLL) SCB68459

DESCRIPTION

The SCB68459 Disk Phase Locked Loop (DPLL) is a single chip bipolar digital circuit designed for rigid disk and floppy disk applications. This circuit offers high performance and reliability unmatched by discrete design. It is ideally suited for use with the SCN68454 Intelligent Multiple Disk Controller (IMDC).

The SCB68459 DPLL operates by producing an oscillator frequency to match the frequency of an input signal f_i. In this locked condition, any slight change in f_i (jitter) first appears as a change in phase between f_i and the oscillator frequency. This phase shift then acts as an error signal to change the frequency of the local VCO to match f_i.

The DPLL architecture utilizes two interfaces—a controller interface and a disk drive interface. Included in the controller interface are data (read/write), clock (read/write), tickler (for internal multiplexing control) and other control signals. These interface signals are connected directly to/from the SCN68454 IMDC. On the other hand, the disk interface consists of primarily the data (read and write) and other control signals depending on disk type.

For each disk type (i.e. SA1000 Winchester, or floppy disk), one DPLL circuit can be used to support up to four drives. If a Winchester disk and a floppy disk are used, two DPLL circuits are required.

The architecture of the DPLL is basically a feedback system comprised of the following:

- Phase detector (comparator)
- Low pass filter and error amplifier
- Prescaler (or divider)
- Data regenerator
- Precompensation circuit

The phase detector compares the phase and frequency of the incoming signal with the VCO frequency and generates an error voltage that is related to the phase and frequency difference between the two signals.

The low pass filter serves a dual function: first, by attenuating the high frequency error components at the output of the phase comparator, it enhances the interference rejection characteristics; second, it provides a short-term memory for the PLL and ensures a rapid recapture of the signal.

The external VCO is a programmable oscillator programmed via the use of an external capacitor. It functions as a current to frequency converter (or voltage to frequency converter). The VCO provides a read/write clock to the SCN68454 IMDC.

The prescaler is a divider. If FM modulation is used, the divider performs divide by 2; if MFM then divide by 1. The prescaler output presents the reference frequency to the phase detector.

The data regenerator's main function is to clean up the jittery input signals before delivering it to the precompensation circuit.

The precompensation circuit will advance or delay the pulse train before writing onto the disk in the form of composite data. The precompensating algorithm is programmed onto the chip.

When the DPLL is used with the SCN68454 IMDC, the clock and data separation and address mark detection are actually performed by the IMDC.

FEATURES

- **On chip multiplexer for read/write data and free-running clock**
- **Circuit operates from a single +5V supply**
- **Supports composite data rate of 10MHz**
- **Loop filter bandwidth of 2MHz**
- **Supports MFM and FM data formats**
- **Phase detector with**
  - **TTL inputs**
  - **50% duty cycle for inputs**
  - **Adjustable gain**
  - **No phase reversal at inputs**
  - **Capture range not to exceed lock range**
- **Voltage-controlled-oscillator controls**
- **TTL compatible inputs and outputs**
- **External loop gain control**

DUAL UNIVERSAL SERIAL COMMUNICATIONS CONTROLLER SCN68562

DESCRIPTION

The Signetics SCN68562 Dual Universal Serial Communications Controller (DUSCC) is a single chip MOS-LSI communications device that provides two independent, multi-protocol, full duplex receiver/transmitter channels in a single package. The DUSCC supports bit oriented and character oriented (byte count and byte control) synchronous data link controls as well as asynchronous protocols. The logic for both channels provides formats, synchronization, and validation for data transferred to and from the channel interface.

The SCN68652 interfaces to the SCN68000 MPU via asynchronous bus control signals and is capable of program polled, interrupt driven, or DMA data transfers.

Each channel of the DUSCC consists of a receiver, a transmitter, a 16-bit multifunction counter/timer, a digital phase locked loop (DPLL), a parity/CRC generator and checker, and associated control circuits. The operating mode and data format of each channel can be programmed independently. The two channels share a common bit rate generator (BRG), operating directly from a crystal or an external clock, which provides sixteen common bit rates simultaneously. The receiver and transmitter of each channel can independently select its operating rate from the BRG, the DPLL, the counter/timer, or from an external 1x or 16x clock, making the DUSCC well suited for dual speed channel applications.

The transmitter and receiver each contain a four-deep FIFO with appended command and status bits and a shift register. This permits reading and writing of up to four characters at a time, minimizing the potential of receiver overrun or transmitter underrun, and reducing interrupt or DMA overhead. In addition, a flow control capability is provided to disable a remote transmitter when the FIFO of the local receiving device is full.

Two modem control inputs (DCD and CTS) are monitored by the control logic and three modem control outputs (RTS and two general purpose) are controlled by the CPU. All of the modem control inputs and outputs are general purpose in nature and optionally can be used for functions other than modem control.

The register set for each channel includes two mode registers, two SYN registers (also used for the BOP secondary address), transmitter parameter and timing registers, receiver parameter and timing registers, two counter/timer preset registers, two counter/timer value registers, counter/timer control register, output and miscellaneous register, pin configuration register, channel command register, TxFIFO, RxFIFO, three status registers, and interrupt enable and priority registers.

Associated with the logic for both channels is an interrupt control register and a general status register that can be read through either channel. A modified vector register, read through channel B, contains the programmed interrupt vector with three bits of prioritized encoded status inserted. An unmodified vector register, read through channel A, contains the vector as programmed. The vector is programmed by writing to the vector register through channel A or B and can be programmed to be output on the data bus in response to receipt of an interrupt acknowledge cycle.

There are two versions of the DUSCC. The standard version is packaged in a 48-pin DIP. A 40-pin version provides all of the features, but is limited to dual-address transfers during DMA operation.

FEATURES

- **Multi-protocol operation**
  - **BOP: HDLC/ADCCP, SDLC, SDLC loop, X.25 or X.75 link level, etc.**
  - **COP: BISYNC, DDCMP, X.21**
  - **ASYNC: 5-8 bits plus parity**
- **Four character receiver and transmitter FIFOs**
- **Programmable bit rate for each receiver and transmitter**
- **Parity and FCS (LRC or CRC) generation and checking**
- **Programmable data encoding/decoding: NRZ, NRZI, FM0, FM1, Manchester**
- **Programmable channel mode**
- **Programmable data transfer mode**
- **Compatible with 68430 DMAI and other DMA controllers**
- **Interrupt capabilities**
- **Multi-function programmable 16-bit counter/timer**
- **Modem controls**
- **On-chip oscillator for crystal**

© IC MASTER 1984

DUAL ASYNCHRONOUS RECEIVER/TRANSMITTER (DUART) SCN68681

DESCRIPTION

The Signetics SCN68681 Dual Universal Asynchronous Receiver/Transmitter (DUART) is a single chip MOS-LSI communications device that provides two independent full-duplex asynchronous receiver/transmitter channels in a single package. It is compatible with other S68000 family devices, and can also interface easily with other microprocessors. The DUART can be used in polled or interrupt driven systems.

The operating mode and data format of each channel can be programmed independently. Additionally, each receiver and transmitter can select its operating speed as one of eighteen fixed baud rates, a 16x clock derived from a programmable counter/timer, or an external 1x or 16x clock. The baud rate generator and counter/timer can operate directly from a crystal or from external clock inputs. The ability to independently program the operating speed of the receiver and transmitter make the DUART particularly attractive for dual-speed channel applications such as clustered terminal systems.

Each receiver is quadruply buffered to minimize the potential of receiver overrun or to reduce interrupt overhead in interrupt driven systems. In addition, a flow control capability is provided to disable a remote DUART transmitter when the buffer of the receiving device is full.

Also provided on the SCN68681 are a multipurpose 6-bit input port and a multipurpose 8-bit output port. These can be used as general purpose I/O ports or can be assigned specific functions (such as clock inputs or status/interrupt outputs) under program control.

FEATURES

- **S68000 bus compatible**
- **Dual full-duplex asynchronous receiver/transmiter**
- **Quadruple buffered receiver data registers**
- **Programmable data format**
  - **—5 to 8 data bits plus parity**
  - **—Odd, even, no parity or force parity**
  - **—1, 1.5 or 2 stop bits programmable in 1/16 bit increments**
- **Programmable baud rate for each receiver and transmiter selectable from:**
  - **—18 fixed rates: 50 to 38.4K baud**
  - **—One user defined rate derived from programmable timer/counter**
  - **—External 1x or 16x clock**
- **Parity, framing, and overrun error detection**
- **False start bit detection**
- **Line break detection and generation**
- **Programmable channel mode**
  - **—Normal (full duplex)**
  - **—Automatic echo**
  - **—Local loopback**
  - **—Remote loopback**
- **Multi-function programmable 16-bit counter/timer**
- **Multi-function 6-bit input port**
  - **—Can serve as clock or control inputs**
  - **—Change of state detection on four inputs**
- **Multi-function 8-bit output port**
  - **—Individual bit set/reset capability**
  - **—Outputs can be programmed to be status/interrupt signals**
- **Versatile interrupt system**
  - **—Single interrupt output with eight maskable interrupting conditions**
  - **—Interrupt vector output on interrupt acknowledge**
  - **—Output port can be configured to provide a total of up to six separate wire-OR'able interrupt outputs**

PIN CONFIGURATION

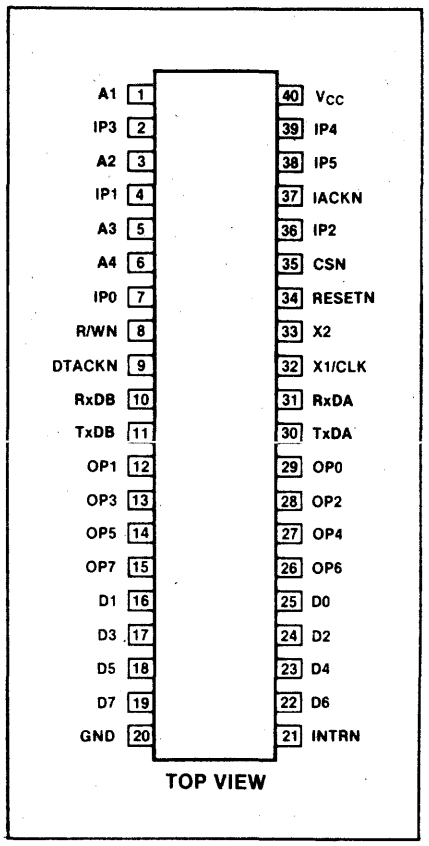

- **Maximum data transfer: 1X — 1MB/sec, 16X — 125KB/sec**
- **Automatic wake-up mode for multidrop applications**
- **Start-end break interrupt/status**
- **Detects break which originates in the middle of a character**
- **On-chip crystal oscillator**
- **TTL compatible**
- **Single +5V power supply**

© IC MASTER 1984

BLOCK DIAGRAM

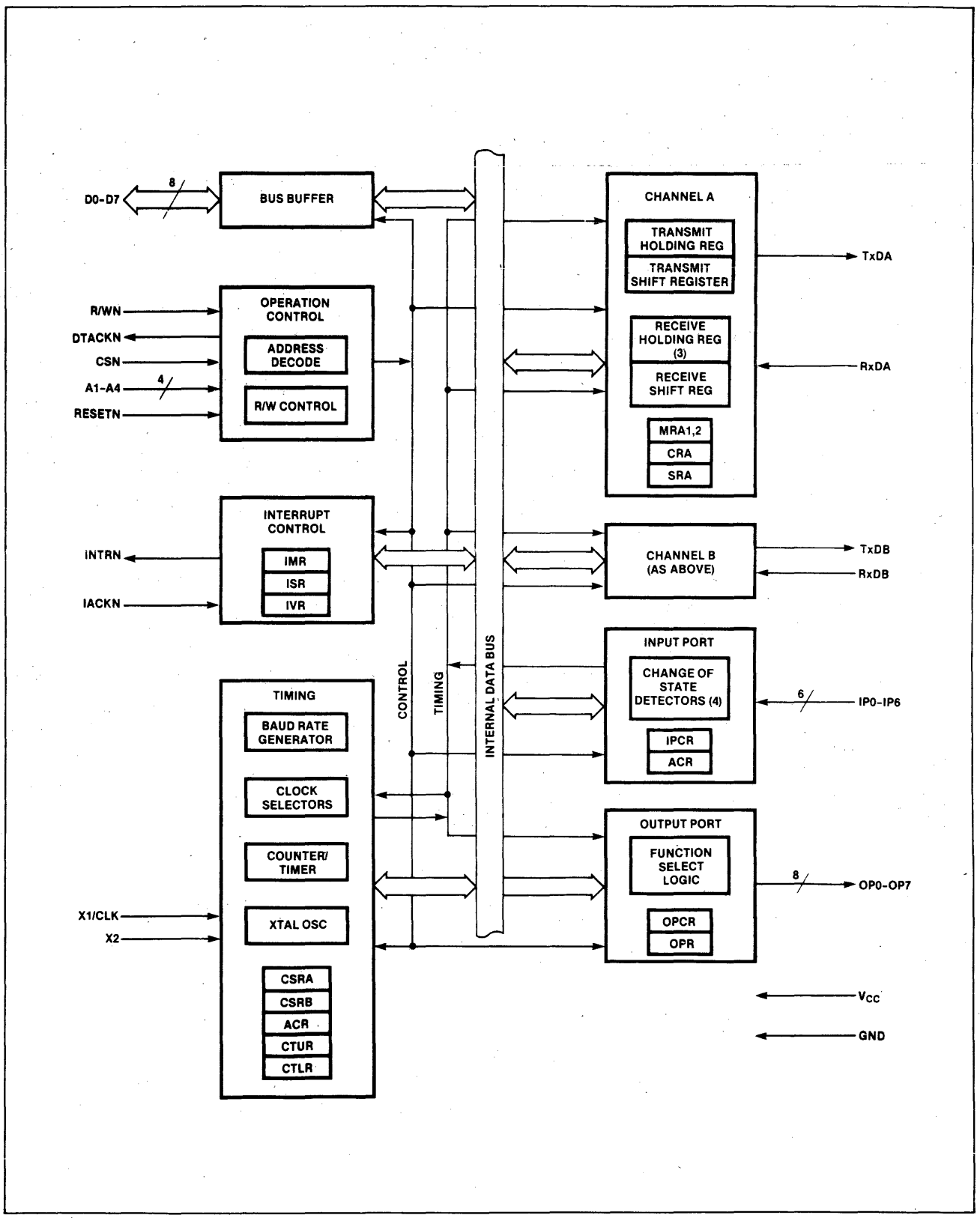

© IC MASTER 1984

Microprocessor Family Selection Guide

6500 MICROPROCESSOR FAMILY

Part Number	Description
SY6502	40 pin CPU, on-chip clock, 64K addressable bytes
SY6503	28 pin CPU, on-chip clock, 4K addressable bytes
SY6504	28 pin CPU, one interrupt, on-chip clock, 8K addressable bytes
SY6505	28 pin CPU, one interrupt, on-chip clock, RDY feature, 4K addressable bytes
SY6506	28 pin CPU, on-chip clock, 2 clock outputs ($\phi 1$, $\phi 2$), 4K addressable bytes
SY6507	28 pin CPU, on-chip clock, RDY feature, 8K addressable bytes
SY6512	40 pin CPU, external clock, 64K addressable bytes
SY6513	28 pin CPU, external clock, 4K addressable bytes
SY6514	28 pin CPU, one interrupt, external clock, 8K addressable bytes
SY6515	28 pin CPU, one interrupt, external clock, RDY feature, 4K addressable bytes

Note: SY65XX available for 1, 2, 3 or 4 MHz operation.

65CXX CMOS MICROPROCESSOR FAMILY

Part Number	Description
SY65C02	CMOS version of SY6502
SY65C06	CMOS version of SY6506
SY65C12	CMOS version of SY6512
SY65C13	CMOS version of SY6513
SY65C114	CMOS version of SY6514
SY65C15	CMOS version of SY6515

Note: SY65CXX available for 1, 2, 3 or 4 MHz operation

6500/6800 PERIPHERALS

Part Number	Description
SY6520	40 pin Peripheral Interface Adapter plug compatible with Motorola's PIA
SY6521 SY6821	40 pin Peripheral Interface Adapter plug compatible with Motorola's 6821
SY6522	40 pin Versatile Interface Adapter — All the features of the 6520 plus: two interval timers, latching on I/O pins, shift register for P/S and S/P interface, interrupt flag and enable registers for ease of use
SY6532	40 pin RAM, I/O, Timer Array — 128 bytes of RAM, 16 I/O channels, interval timer

65C00/68C00 PERIPHERALS

Part Number	Description
SY65C20*	CMOS version of SY6520
SY65C22*	CMOS version of SY6522
SY65C32*	CMOS version of SY6532
SY68C40*	28 pin CMOS programmable timer with three 16-bit counters

Z8™ MICROCOMPUTER FAMILY

Part Number	Description
Z8601	40 pin microcomputer with 2K program ROM, 128 bytes of RAM, 32 I/O lines, 2 timers and serial I/O. Software reconfigurable for up to 124K of external memory expansion.
Z86C01	CMOS version of the Z8601
Z8602	64 pin microcomputer emulation device. Same as Z8601, except no internal program ROM. Additional pins permit external 2716 EPROM for prototyping/development.
Z8603	40 pin Protopack™ emulator. Same as Z8601 except no program ROM. A 2716 EPROM can be piggybacked on top of this device for prototyping/development.
Z8611*	40 pin microcomputer with 4K program ROM, 128 bytes of RAM, 32 I/O lines, 2 timers and a serial I/O. Software reconfigurable for up to 120K external memory expansion.
Z8S	A stripped down Z8 with only 1K program ROM, 64 bytes of RAM, 30 I/O lines and 1 timer. Software is a subset of the Z8 instruction set. Expandable bus interfaces up to 4K bytes of external program memory and 3K bytes of external data memory.
Z8681*	40 pin ROMless microcomputer with Port 1 configured for multiplexed address/data up to 24 I/O lines. 128K of external memory.
Z8682*	40 pin ROMless microcomputer with Port 1 configured for multiplexed address/ data up to 24 I/O lines, 126K of external memory. Requires 7.5 V on reset pin.
Z86C61*	ROMless CMOS microcomputer.

Z8™ and Protopack™ are trademarks of Zilog, Inc.

© IC MASTER 1984

UNIVERSAL PERIPHERALS

Part Number	Description
SY6845R	40 pin CRT controller for raster scan type displays
SY6845E	40 pin enhanced CRT controller for raster scan type displays
SY68045	40 pin CRT controller for raster scan type displays. Two full sets of ROMs are provided for screen formatting.
SY6551	28 pin Asynchronous Communications Interface Adapter with on-board programmable baud rate generator.
SY65C51*	CMOS version of SY6551
SY6591	40 pin single/double density floppy disk formatter/controller, IBM compatible formats. Functionally compatible with Western Digital 1791 and bus compatible with 6500/6800 series microprocessors.
SY1791-02 SY1793-02	40 pin single/double density floppy disk formatter/controller, IBM compatible formats, pin and functionally compatible with Western Digital 1791 and 1793.

Part Number	Description
SY2661	28 pin Enhanced Programmable Communications Interface (EPCI) device capable of handling asynchronous and synchronous communications protocols.
SY66016	64 pin high-speed 16 x 16 NMOS parallel multiplier
SY660C16	CMOS version of SY66016
SY66450*	64 pin graphics processor chip
SY66550*	40 pin raster scanner chip

DEVELOPMENT SUPPORT

Part Number	Description
MDT20	Low cost Z8™ Development System

*Contact factory for availability (new product).

Worldwide Sales and Marketing

Vice President Sales
3001 Stender Way, M/S 30
Santa Clara, CA 95054
Tel: (408) 988-5607
TWX: 910-338-0135

Northwest Regional Sales Office
150 So. Wolfe Road
Sunnyvale, CA 94086
Tel: (408) 735-0221
TWX: 910-339-9500

Southwest Regional Sales Office
4401 Atlantic Ave., Suite 101
Long Beach, CA 90807
Tel: (213) 428-8776
TWX: 910-341-7705

North Central Regional Sales Office
621 Route 83
Bensenville, IL 60106
Tel: (312) 860-3859
TWX: 910-256-1672

South Central Regional Sales Office
14350 Proton Rd.
P.O. Box 344569
Dallas, TX 75234
Tel: (214) 387-5300
TWX: 910-860-5442

Northeast Regional Sales Office
20 Walnut St.
Wellesley, MA 02181
Tel: (617) 431-7630
TWX: 710-383-1582

Southeast Regional Sales Office
5600 Mariner St.
Suite #219
Tampa, FL 33609
Tel: (813) 870-2222
TWX: 810-876-9148

Mid-Atlantic Regional Sales Office
555 Broadhollow Rd.
Melville, NY 11747
Tel: (516) 752-0900
TWX: 510-224-6247

Northern European Zone Manager
Honeywell House
Charles Square
Bracknell, Berkshire, U.K.
Rg 12 1 EB
Tel: |03| (44) 24555
TWX: (815) 847064

Central European Zone Manager
Freischuetzstrasse 92
D-8000 Muenchen 81
West Germany
Tel: |49| (089) 9597-100
TWX: (841) 5216884

Southern European Zone Manager
Rue Emile Verhaeren 6
92210 St. Cloud
France
Tel: |33| (01) 7711071
TWX: (842) 200841

TEXAS INSTRUMENTS
PROGRAMMABLE PRODUCTS DIVISION · M/S 6432
POST OFFICE BOX 1443 · HOUSTON, TEXAS 77001

PROGRAMMABLE PRODUCTS

CONTENTS

Overview
TMS320 Family of Digital Signal Processors
TMS99000 16-Bit Microprocessor/Microcomputer Family
TMS7000 8-Bit Microcomputer Family
TMS1000 4-Bit Microcomputer Family
Microprocessor Peripherals

Overview

Texas Instruments is the only manufacturer to offer 4-, 8-, 16-, and 32-bit single-chip microcomputers, meeting a broad range of customer applications and requirements. To date, TI has shipped over 100 million microcomputers, making Texas Instruments the world's leading supplier of microcomputer products.

The new TMS320 family of 16/32-Bit Digital Signal Processors is rapidly being accepted as the new industry standard for high-performance signal processing applications. Through its five million instructions per second, hardware multiply, barrel shifter, and digital signal processing instructions, the TMS320 family opens new areas in microcomputer applications. Applications such as speech recognition are now solved with low-cost microcomputers.

The 16-bit TMS99000 family provides a choice of high-performance microprocessors and microcomputers. Features include advanced architecture, bus structure, and an instruction set that is compatible throughout the family.

The 8-bit TMS7000 family is the newest, most cost-effective system solution for 8-bit microcomputer applications, such as computer peripherals, telecommunications, industrial control, and automotive. It has unique features that significantly enhance performance and flexibility.

The 4-bit TMS1000 family is targeted for high-volume applications where the most cost-effective microcomputer intelligence is required. Typical applications of the 40-device TMS1000 family include appliance controllers, toys and games, instrumentation, and other simple controller operations.

The Advanced Microprocessor Peripheral Family provides a cost-effective, high-performance solution to many of the common I/O and control functions. Advanced peripherals are available for MODEM, Video Display Controllers and many other functions within a single chip. Advanced peripherals will interface with most microprocessors, and microcomputers.

The XDS Development Systems provide host-independent tools for the development of hardware and software for the following microprocessor families: TMS320, '7000, '99000, and '9995. The TMS1000 family is supported by its own development system explained herein with the TMS1000 family.

XDS Models 22 and 33 offer in-circuit emulation, breakpoint control, and trace capabilities. The Model 22 uses a simple but powerful set of over 60 commands that aid program development. In addition, the Model 33 also uses a user-friendly, structured high-level language, XMPL, giving additional ease-of-use.

The host-independent configuration of the XDS, coupled with a transportable set of development and debug tools (e.g., emulation, breakpoint, trace) lets you select the TI microprocessor best suited to solving your problem. Having a common set of tools available means the basic development format has to be learned only once; and then it can be used with any TI TMS320, TMS7000, TMS9995, and TMS99000 family microprocessor as desired. In addition, any combination of these processors can be used in the multiprocessing mode, linked together in a daisy-chain manner.

XDS cross assemblers and host interfaces are available for the IBM 370 MVS and IBM CMS operating systems, DEC VAX series VMS operating systems, the TI 990 systems using the DX10 operating system and TI FS990 and TMAM9000 systems. Third party cross assemblers are available for Intel ISIS XI-800 and XI-11, IBM PC, and CP/M 2.2/3.0. These permit using pre-installed equipment that is familiar to the user.

Copyright © 1983 by Texas Instruments Incorporated

© IC MASTER 1984

TEXAS INSTRUMENTS
PROGRAMMABLE PRODUCTS DIVISION · M/S 6432
POST OFFICE BOX 1443 · HOUSTON, TEXAS 77001

TMS320 Family of Digital Signal Processors

The TMS32010 is the first member of the new TMS320 digital signal processing family, designed to support a wide range of high-speed or numeric-intensive applications. This 16/32-bit single-chip microcomputer combines the flexibility of a high-speed controller with the numerical capability of an array processor, thereby offering an inexpensive alternative to multichip bit-slice processors.

The TMS320 family contains the first MOS microcomputers capable of executing five million instructions per second. This high throughout is the result of the comprehensive, efficient, and easily programmed instruction set and of the highly pipelined architecture. Special instructions have been incorporated to speed up the execution of digital signal processing (DSP) algorithms.

Development support is available for a variety of host computers. This includes a macro assembler, linker, simulator, emulator, and evaluation module.

KEY FEATURES

With an excellent combination of features, the TMS320 family of high-performance digital signal processors is a cost-effective alternative to custom VLSI devices and bit-slice systems.

- 200-ns instruction cycle
- 288-byte on-chip data RAM
- Microprocessor version - TMS32010
- Microcomputer version - TMS320M10 (3K-byte on-chip program ROM)
- ROMless version - TMS32010
- 3K-byte on-chip program ROM - TMS320M10
- External memory expansion to a total of 8K bytes at full speed
- 16-bit instruction/data word
- 32-bit ALU/accumulator
- 16 x 16-bit multiply in 200 ns
- 0 to 15-bit barrel shifter
- Eight input and eight output channels
- 16-bit bidirectional data bus with 40-megabits-per-second transfer rate
- Interrupt with full context save
- Signed two's complement fixed-point arithmetic
- 2.7 micron NMOS technology
- Single 5-V supply
- 40-pin DIP

The TMS320M10 and the TMS32010 are exactly the same with one exception: the TMS320M10 contains an on-chip masked ROM while the TMS32010 utilizes off-chip program memory.

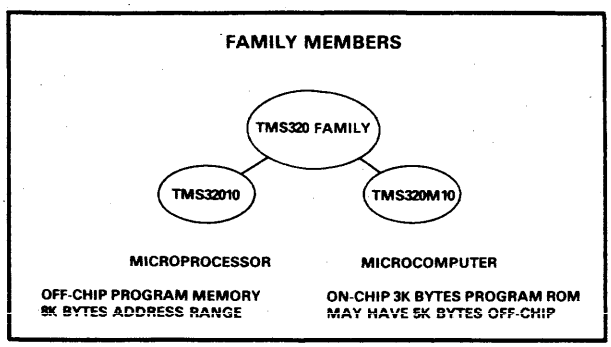

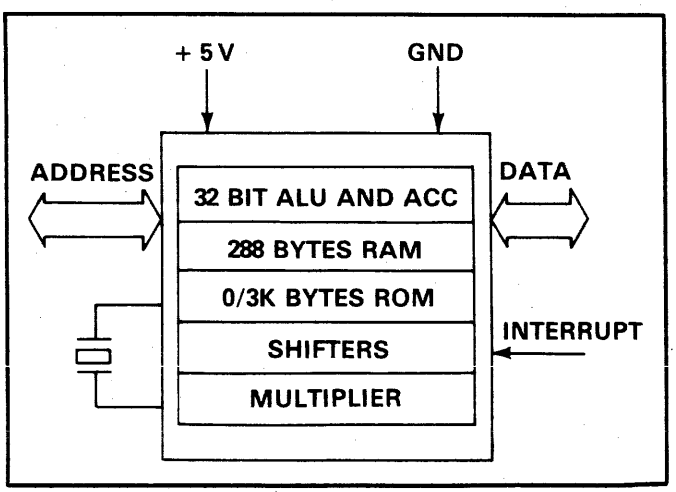

Copyright © 1983 by Texas Instruments Incorporated.

TEXAS INSTRUMENTS
PROGRAMMABLE PRODUCTS DIVISION · M/S 6432
POST OFFICE BOX 1443 · HOUSTON, TEXAS 77001

TMS320 Family of Digital Signal Processors

The TMS320 family's unique versatility and power give the design engineer a new approach to a variety of complicated applications. In addition, these microcomputers are capable of providing the multiple functions often required for a single application. For example, the TMS320 family can enable an industrial robot to synthesize and recognize speech, sense objects with radar or optical intelligence, and perform mechanical operations through digital servo loop computations.

Some typical applications of the TMS320 family are listed below.

TYPICAL APPLICATIONS OF THE TMS320 FAMILY

SIGNAL PROCESSING	TELECOMMUNICATIONS	IMAGE PROCESSING
• Digital filtering • Correlation • Hilbert transforms • Windowing • Fast Fourier transforms • Adaptive filtering • Waveform generation • Speech processing • Radar and sonar processing • Electronic counter measures • Seismic processing	• Adaptive equalizers • μ/A law conversion • Tone generators • High-speed modems • Multiple-bit-rate modems • Amplitude, frequency, and phase modulation/demodulation • Data encryption • Data scrambling • Digital filtering • Data compression • Spread-spectrum communications	• Pattern recognition • Image enhancement • Image compression • Homomorphic processing • Radar and sonar processing **HIGH-SPEED CONTROL** • Servo links • Position and rate control • Motor control • Missile guidance • Remote feedback control • Robotics
INSTRUMENTATION	**NUMERIC PROCESSING**	**SPEECH PROCESSING**
• Spectrum analysis • Digital filtering • Phase-locked loops • Averaging • Arbitrary waveform generation • Transient analysis	• Fast multiply/divide • Double-precision operations • Fast scaling • Non-linear function computation (i.e., sin x, e^x)	• Speech analysis • Speech synthesis • Speech recognition • Voice store and forward • Vocoders • Speaker authentification

TMS320 SIGNAL PROCESSING MICROCOMPUTERS

FEATURES	TMS32010	TMS320M10
Accumulator Width (bits)	32	32
Data Word (bits)	16	16
Clock Rate (MHz)	20	20
Instruction Rate (MIPS)	5	5
Memory On-Chip RAM (bytes)	288	288
ROM (bytes)	0	3 K
16 X 16 Multiply - 200 ns	✓	✓
Barrel Shifter	✓	✓
Power Supply	5 V	5 V
Development System	✓-XDS	✓-XDS

Copyright © 1983 by Texas Instruments Incorporated.

TEXAS INSTRUMENTS
PROGRAMMABLE PRODUCTS DIVISION · M/S 6432
POST OFFICE BOX 1443 · HOUSTON, TEXAS 77001

TMS320 Family of Digital Signal Processors

TYPICAL SIGNAL PROCESSING SYSTEM CONFIGURATION

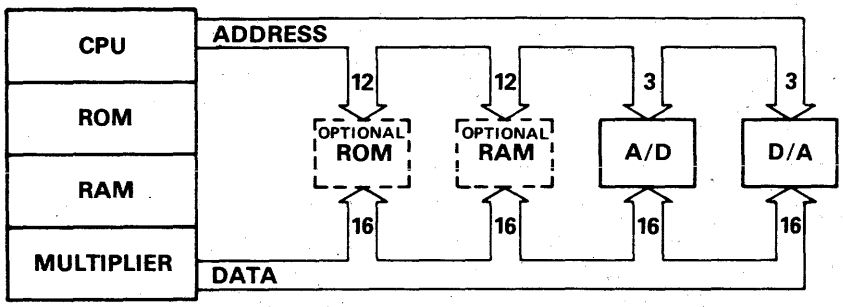

TMS 320M10

ARCHITECTURE

The TMS320 family utilizes a modified Harvard architecture for speed and flexibility. In a strict Harvard architecture, program and data memory lie in two separate spaces, permitting a full overlap of the instruction fetch and execution. The TMS320 family's modification of the Harvard architecture allows transfers between program and data spaces, thereby increasing the flexibility of the device. This modification permits coefficients stored in program memory to be read into the RAM, eliminating the need for a separate coefficient ROM. It also makes available immediate instructions and subroutines based on computed values.

The TMS32010 utilizes hardware to implement functions that other processors typically perform in software. For example, this device contains a hardware multiplier to perform a multiplication in a single 200-ns cycle. There is also a hardware barrel shifter for shifting data on its way into the ALU. Finally, extra hardware has been included so that auxiliary registers, which provide indirect data RAM addresses, can be configured in an autoincrement/decrement mode for single-cycle manipulation of data tables. This hardware-intensive approach gives the design engineer the type of power previously unavailable on a single chip.

TMS32010 PIN DEFINITIONS

SIGNAL	I/O	DEFINITION
V_{CC}, V_{SS}	IN	Power and ground
X1	IN	Crystal input
X2/CLKIN	IN	Crystal input or external clock input
CLKOUT	OUT	System clock output, 1/4 crystal/CLKIN frequency
$\overline{WE}$	OUT	Write enable indicates valid data on D15-D0.
$\overline{DEN}$	OUT	Data enable indicates the processor accepting input data on D15-D0.
$\overline{MEN}$	OUT	Memory enable indicates that D15-D0 will accept external memory instruction.
$\overline{RS}$	IN	Reset used to initialize the device
$\overline{INT}$	IN	Interrupt
$\overline{BIO}$	IN	External polling input for bit test and jump operations
MC/$\overline{MP}$	IN	Memory mode select pin. High selects microcomputer mode. Low selects microprocessor mode.
D15-D0	I/O	16-bit data bus
A11-A0/ PA2-PA0	OUT	External address bus. I/O port address multiplexed over PA2-PA0.

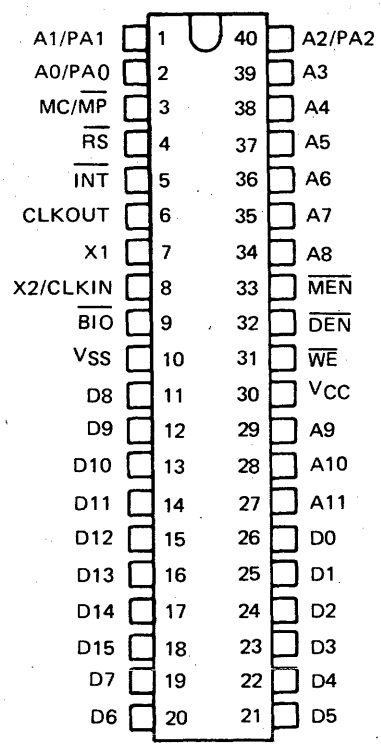

TMS32010 PIN ASSIGNMENTS

Copyright © 1983 by Texas Instruments Incorporated.

TEXAS INSTRUMENTS
PROGRAMMABLE PRODUCTS DIVISION · M/S 6432
POST OFFICE BOX 1443 · HOUSTON, TEXAS 77001

TMS99000 16-Bit Microprocessor Family

The TI 99000 Family provides a choice of high-performance, and single-chip microprocessors and microcomputers. Each is unique. An advanced architecture, bus structure, and instruction set common to the entire Family provide design ease and flexibility, high performance, economy, and other benefits for both designer and user. Fully supported by software, software development systems, and TI's technical assistance, these circuits are available now. The key microproprocessors of the 99000 Family include:

TMS9900 MICROPROCESSOR. The TMS9900, introduced in 1977, is the world's first 16-bit microprocessor. The TMS9900 is backed by an established base of software and design support. Key features include: 16-bit instruction word; 8- and 16-bit data format; bidirectional parallel data bus; direct addressing of up to 64K bytes; 69 instructions, including multiply and divide; 7 addressing modes; 17 prioritized interrupts; and a unique bit serial I/O in addition to general memory-mapped I/O.

TMS9995 MICROPROCESSOR. The TMS9995 Contains a performance enhanced CPU, on-chip 256 bytes of RAM, and external memory and I/O bus to bring speed and low chip count for systems requiring both high performance and low system cost. Key Features include 9900 instruction set including signed multiply and divide; 256 bytes of on-chip RAM; on-chip 16-bit interval time/event counter; on-chip I/O mapped flag register; 7 prioritized interrupts; 64K bytes memory addressability; and an on-chip 12-MHz clock generator. The TMS9995 is supported by TI's XDS family of development systems covered in the MICROPROCESSOR DEVELOPMENT SYSTEMS section.

TMS99000 MICROPROCESSORS. The TMS99000 Family is the third and newest family of advanced 16-bit microprocessors from TI. With performance 5 to 7 times that of the TMS9900, the 99000 Family features 84 powerful instructions that are a direct superset of the 9900. With a fast, 167-nanosecond cycle time, the 99000 family of processors can perform a memory-to-memory move in just 0.8 microseconds. Also new for the 99000 Family is both parallel and serial I/O address space for flexibility in configuring input/output devices. The first member of the 99000 Family is the TMS99105 Advanced 16-bit Microprocessor. The TMS99105 supports all the features of the 99000 Family. The TMS99110 Advanced 16-bit Microprocessor includes all the features of the TMS99105 with the addition of the 12 single-precision floating point instructions. The TMS99000 is supported by TI's XDS family of development systems described in the MICROPROCESSOR DEVELOPMENT SYSTEMS section.

FEATURES	DEVICE NUMBER		
	TMS99110A	TMS99105A	TMS9995*
Minimal System Chip Count	5	5	3
Clock Rate (MHz)	24	24	12
Max Memory Reach (Bytes)			
Stand-Alone	256K	256K	64K
Memory Mapper	16M	16M	16M
On-Chip Memory (Bytes)			
ROM	1024	1024	0
RAM	32	32	256
Addressing Modes	7	-	7
Number of Instructions	96	84	73
Developement System	AMPL	AMPL	AMPL
Power Supply	+5 V	+5 V	+5 V
Temperature Range	0°C to 70°C		
On-Chip Clock	Yes	Yes	Yes
CRU Address Reach	32K	32K	32K
Package			
Pins	40	40	40
Type	N,J	N,J	N,J

*Available in Industrial Temperature Range (-40°C to +85°C)

Copyright © 1983 by Texas Instruments Incorporated

© IC MASTER 1984

TEXAS INSTRUMENTS
PROGRAMMABLE PRODUCTS DIVISION · M/S 6432
POST OFFICE BOX 1443 · HOUSTON, TEXAS 77001

TMS99000 16-Bit Microprocessor Family

TMS99000 Family Instruction Set

MNEMONIC	DESCRIPTION
A	Add Word (16-bit)
AB	Add Byte (8-bit)
ABS	Absolute Value
AI	Add Immediate
AM	Add Multiple (32-bit)
ANDI	AND Immediate
B	Branch
BIND	Branch Indirect
BL	Branch and Link
BLWP	Branch and Load Workspace Pointer
BLSK	Branch Immediate and Push Link to Stack
C	Compare Word
CB	Compare Byte
CI	Compare Immediate
CKOF	External Clock Off
CKON	External Clock On
CLR	Clear Word
COC	Compare Ones Corresponding
CZC	Compare Zeros Corresponding
DEC	Decrement
DECT	Decrement By Two
DIV	Unsigned Divide
DIVS	Signed Divide
IDLE	Idle Processor
INC	Increment
INCT	Increment By Two
INV	Invert
JXX	Jump (1-unconditional, 12-conditional)
LDD*	Long Distance Destination (Memory Mapper Control)
LDCR	Load Communications Register Unit (I/O)
LDS*	Long Distance Source (Memory Mapper Control)
LI	Load Workspace Register Immediate
LIMI	Load Interrupt Mask Immediate
LREX	Load External
LST	Load Status Register
LWP	Load Workspace Pointer

MNEMONIC	DESCRIPTION
LWPI	Load Workspace Pointer Immediate
MOV	Move Word
MOVB	Move Byte
MPY	Multiply
MPYS	Signed Multiply
NEG	Negate
ORI	OR Immediate
RSET	External Reset
RTWP	Return to Workspace Pointer
S	Subtract (16-Bit)
SB	Subtract Byte (8-Bit)
SBO	Set Bit to One (I/O)
SBZ	Set Bit to Zero (I/O)
SETO	Set Word to Ones
SLA	Shift Left Arithmetic
SLAM	Shift Left Arithmetic Multiple (32-Bit)
SM	Subtract Multiple (32-Bit)
SRA	Shift Right Arithmetic
SRAM	Shift Right Arithmetic Multiple (32-Bit)
SRC	Shift Right with Carry
SRL	Shift Right Logical
SOC	Set Ones Corresponding Word
SOCB	Set Ones Corresponding Byte
STCR	Store Communication Register Unit (I/O)
STST	Store Status
STWP	Store Workspace Pointer
SWPB	Swap Bytes
SZC	Set Zeros Corresponding Word
SZCB	Set Zeros Corresponding Byte
TB	Text Bit (I/O)
TCMB	Test and Clear Memory Bit
TMB	Test Memory Bit
TSMB	Test and Set Memory Bit
X	Execute
XOP	Extended Operation (Software Context Switch-16 XOP's)
XOR	Exclusive-OR

*Implemented in TMS99110A only.

TMS99110 FLOATING POINT FUNCTIONS

AR	Add Real	CR	Compare Reals
SR	Subtract Real	CIR	Convert Integer to Real
MR	Multiply Real	CER	Convert Extended Integer to Real
DR	Divide Real	CRI	Convert Real to Integer
LR	Load Real	CRE	Convert Real to Extended Integer
STR	Store Real	MM	Multiply Multiple (32 bit integer x 32 bit integer = 64 bit general source/destination)
NEGR	Negate Real		

Copyright © 1983 by Texas Instruments Incorporated.

TEXAS INSTRUMENTS
PROGRAMMABLE PRODUCTS DIVISION · M/S 6432
POST OFFICE BOX 1443 · HOUSTON, TEXAS 77001

TMS7000 8-Bit Microcomputer Family

The first microprogrammable 8-bit microcomputer

Setting new VLSI standards in cost, performance, and flexibility with unique chip design and rich instruction set...

- Microprogrammable instruction set
- SCAT-Strip Chip Architecture Topology
- Up to 12K bytes on-chip ROM
- 128 memory-mapped registers
- External memory expansion to 64K bytes
- 32 I/O bits
- Register-to-register architecture
- Two's complement arithmetic
- External maskable interrupts
- Available in CMOS
- On-chip timers
- Available with UART

The TMS7000 is a flexible and cost-effective system solution for 8-bit microcomputer applications such as computer peripherals, telecommunications, industrial control, automotive and appliances.

At the heart of the TMS7000 family is TI's newly developed STRIP CHIP ARCHITECTURE TOPOLOGY (SCAT). The SCAT design greatly simplifies the additon of new functional blocks to the basic feature set of the TMS7000. This allows for an ease of family expansion and a degree of family compatibility that is unmatched in 8-bit microcomputers. The unique memory-like, array-structured chip results in an economy of chip size. Using its powerful instruction set, variety of addressing modes and SCAT, the TMS7000 maximizes throughput while minimizing memory requirements. The instruction set contains the usual byte-oriented instruction; in addition, it offers hardware multiplication, double-precision arithmetic, single-and multiple-bit testing, and BCD arithmetic.

Another feature of the TMS7000 family is the on-chip control ROM used to define the instruction set. Up to 25% of the instruction set can be customized by substituting microcode for the standard instruction set in order to perform special custom instructions.

Five memory expansion modes allow an efficient trade-off of I/O pins for easy interface to a wide range of external memory and peripheral devices. The expansion modes can be dynamically selected in software. Full expansion mode permits up to 64K bytes to be addressed, while the single-chip mode enables 32 I/O lines to yield maximum memory and I/O positioning flexibility.

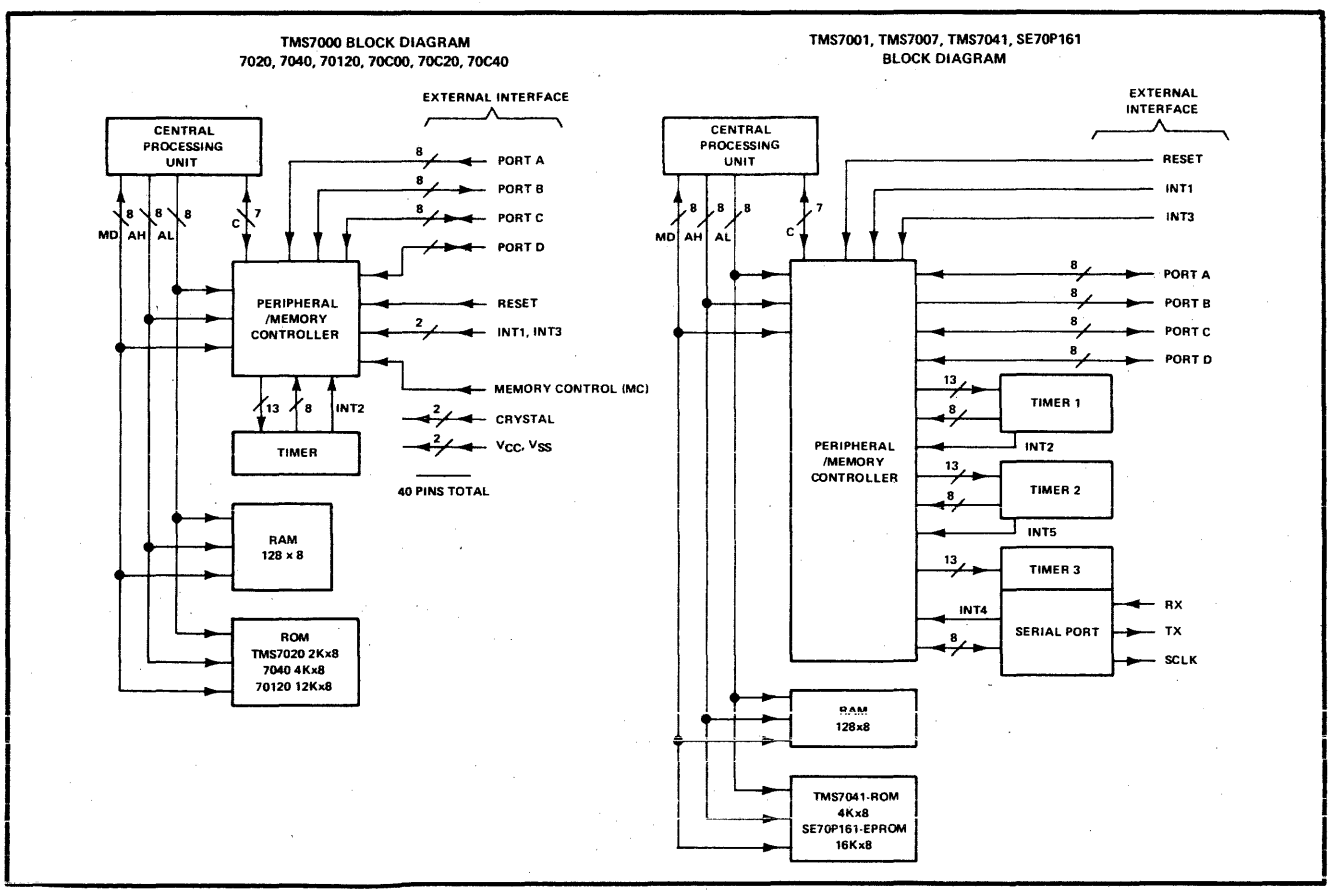

Copyright © 1983 by Texas Instruments Incorporated.

© IC MASTER 1984

TEXAS INSTRUMENTS
PROGRAMMABLE PRODUCTS DIVISION · M/S 6432
POST OFFICE BOX 1443 · HOUSTON, TEXAS 77001

User Benefits

FLEXIBILITY

- The TMS7000 family's adaptability allows the user's requirements rather than processor capabilities to dictate the system design.
- Users can make quick design modifications to stay ahead of their competition in a dynamic marketplace.
- The XDS host independent development system supports TMS7000 software development on a variety of hosts.
- Microprogramming the on-chip control ROM allows the TMS7000 user to mold the instruction set to his individual application. This results in faster execution and less ROM space.
- The five expansion modes permit dynamic trade-offs between I/O lines and memory expansion configuration.
- The CMOS members of the TMS7000 family offer two software-selectable low-power modes. They also allow the system designer a greater latitude in power supply selection by offering operation over a wide voltage range.
- A variety of package configurations are available including 40-pin 600-mil wide plastic DIP with either 100-mil or 70-mil pin centers.
- The TMS7000's 3 external interrupts are implemented in a flexible, prioritized interrupt structure with each interrupt individually maskable. Interrupt status may be tested without necessarily entering the interrupt service routine.

COST EFFECTIVE

- SCAT results in efficient die usage.
- Microcoding the instruction set in firmware is more silicon efficient than using PLAs. These factors can reduce chip cost by up to 25%.
- The easy to use, low-cost XDS development system allows TMS7000 users to shorten design cycles.
- The TMS7000 family architecture results in a highly-integrated, cost-effective system solution. An excellent price/performance ratio allows system designs using TMS7000 family products to incorporate enhanced capabilities at a total cost lower than those using general purpose microcomputers.
- With 32 I/O lines, systems can achieve a high level of performance without inserting I/O expansion devices.
- Overall system costs can be reduced for single-chip designs where the power supply is a key cost element.
- TMS7000 CMOS 3-to-6V power requirements in active and standby modes allow more flexibility in system power supply design.

COMPATIBILITY

- Software compatible: all TMS7000 family members use the same instruction set. This allows easy upgrade to a larger ROM device or an added new function without a major software rewrite.
- Future software compatible: the TMS7000 will be software compatible with all future TMS7000 family members.
- SCAT compatible: since all members are basically of similar design, the interrupt structures, I/O structure, and memory map are compatible. Thus design times on follow-up projects are shorter than with traditionally designed microcomputers. The pin-out for all TMS7000 members without a UART (TMS 70X0) are shown below at the left; those with a UART (TMS70X1) are shown on the right. Note that the new TMS70X1 family members have maintained pin-for-pin compatibility while adding increased functionality.

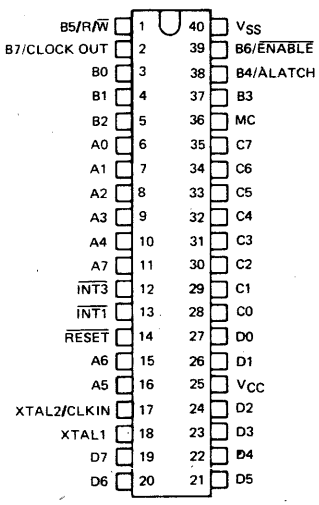

TMS7000, '7020, '7040, '70120

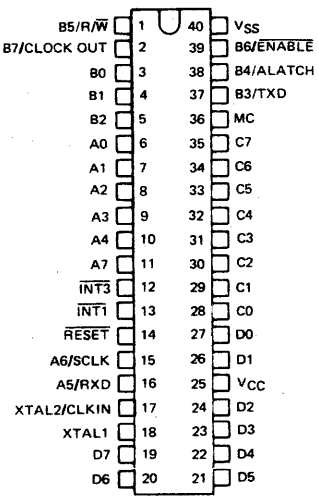

TMS7001, TMS7041

Copyright © 1983 by Texas Instruments Incorporated.

TEXAS INSTRUMENTS
PROGRAMMABLE PRODUCTS DIVISION · M/S 6432
POST OFFICE BOX 1443 · HOUSTON, TEXAS 77001

User Benefits (continued)

PERFORMANCE

- Nine addressing modes provide programming flexibility and easy data management.
- The TMS7000 offers five memory-expansion modes which are hardware and software controllable, allowing dynamic switching between modes.
- Register-to-register architecture allows easy access to all RAM and ROM. Arithmetic operations can occur between registers without necessarily going through an accumulator as required in other processors.
- The TMS7000 features truly bidirectional I/O configuration with direction selectable on a bit-by-bit basis. Writing to the data direction register implements I/O port control, and reading from the data direction register determines port status.
- The instruction set has a unique "bit test and jump" instruction that functions on both I/O and memory data. This results in efficient branching and looping capabilities.
- The customizable instruction set and microcoded architecture allows instruction-set adaptation to meet current performance requirements as well as make room for future performance requirements. This microcoding flexibility results in code compaction, performance enhancement, and product differentiation.

Available Options

The TMS7000 family offers a variety of memory configurations, plus packaging options to support a wide range of applications. These options are listed in the table at the bottom of this page. The current family members include 10 microcomputers (TMS7000, TMS7020, TMS7040, TMS70120, TMS7001, TMS7007, TMS7041, TMS70C00, TMS70C20, TMS70C40), a prototyping component (SE70P161) and a data encryption device (TMS7500).

The TMS7000 is a ROM-less 8-bit microprocessor with 128 bytes of RAM. It can interface up to 64K bytes of memory via an 8-bit data bus. Based on NMOS technology, the TMS7000 has a 5-MHz clock rate, 5-volt operation and is available in a 40-pin package.

The TMS7020, TMS7040, and TMS70120 offer the same features as the TMS7000 but contain an added 2 K, 4 K, and 12 K bytes (respectively) of mask programmable ROM for applications programming.

The TMS7041 is a version of the TMS7040 featuring a universal, asynchronous receiver-transmitter (UART) that can handle two standard, character-oriented protocols (6801 and 8051 protocols). The TMS7041 offers many flexible features, including programmable baud rate, and start and stop bits. These capabilities make the TMS7041 suited for a wide range of character-oriented applications, such as controlling printers and terminals. The TMS7001 and TMS7007 are the ROM-less versions.

For applications requiring low power consumption, the TMS7000, TMS7020, and TMS7040 are offered in CMOS versions — TMS70C00, TMS70C20, TMS70C40. These parts are functionally compatible with the NMOS parts, but allow a wider range of operating voltages (3-to-6V), variable operating frequencies, and several low-power modes.

The TMS7500 data encryption device is a preprogrammed version of the TMS7020 that performs medium-speed data encryption according to the Data Encryption Standard algorithm specified in the Federal Processing Standard Publication #46.

TMS7000 FAMILY

	7000	7020	7040	70120	7001	7007	7041	70P161	70C00	70C20	70C40
ROM (bytes)		2K	4K	12 K			4K			2K	4K
RAM (bytes)	128	128	128	128	128	128	128	128	128	128	128
UART					YES	YES	YES	YES			
Memory Expansion Modes	2	5	5	5	2	2	5	5	2	5	5
Interrupt Levels	4	4	4	4	6	6	6	6	4	4	4
13-bit Timer/Counter	1	1	1	1	2	2	2	2	1	1	1
Operating Voltage	5	5	5	5	5	5	5	5	3-6	3-6	3-6
I/O Lines (total)	32	32	32	32	32	32	32	32	32	32	32
Bidirectional	16	16	16	16	22	22	22	22	16	16	16
Input Only	8	8	8	8	2	2	2	2	8	8	8
Output Only	8	8	8	8	8	8	8	8	8	8	8
Power Consumption (mW)	400	400	400	550	400	400	400	*	30	30	30
Power Down Current									5mA	5mA	5mA
Process Technology	NMOS	NMOS	NMOS	NMOS	NMOS	NMOS	NMOS	NMOS	CMOS	CMOS	CMOS
No. of pins	40	40	40	40	40	40	40	40	40	40	40

† Up to 16 K bytes of user-supplied piggyback EPROM
* Dependent on user-selected EPROM

Copyright © 1983 by Texas Instruments Incorporated.

TEXAS INSTRUMENTS
PROGRAMMABLE PRODUCTS DIVISION · M/S 6432
POST OFFICE BOX 1443 · HOUSTON, TEXAS 77001

Development Support

TI offers 3 forms of development support: eXtended Development System (XDS), SE70P161 prototyping device, and an evaluation module (EVM) board. The XDS system provides high-performance, low-cost development with in-circuit emulation, trace and breakpoint capability, and a high-level debug language. Please see XDS in the MPU development systems section for additional information. The SE70P161 allows form-factor emulation via an EPROM socketed (piggyback style) on top of the SE70P161. The EVM board provides extremely low-cost in-circuit emulation of the single-chip mode. Its two serial ports and cassette interface allow it to function as a stand-alone development system or to accept text files from a host CPU. It also has EPROM-programming capability.

Applications for the TMS7000

AUTOMOTIVE

Dashboard controls
Engine control
Instrument cluster control
Climate control
Radio
Speed control
Safety options (lights on, seat belt,...)
Speech
Failure alarms
Electronic locks
Wiper motor control
Security systems
Video displays

RETAIL

Bar-code readers
Data encryption
Automatic tellers
Point-of-sale terminals
Scales

TELECOMMUNICATIONS

Feature phones
Auto dialers

CONSUMER

Appliances
Toys and games
Home computers
Cable TV
Security systems
Clocks (talking)
Climate adjustment controls
Advanced appliances
Intelligent telephones
Home entertainment
Educational products
Stereo systems

CONTROL SYSTEMS

Instrumentation
Servo links
Position and rate control
Motor control
Remote feedback
Robotics
Remote sensing (temperature, pressure,...)
Machine controllers
Inventory systems
Sequences

COMPUTER

Portable computers
Printers
Floppy disk controller
Data line buffers/spoolers
Multi-processor networking
Intelligent peripherals (speech, I/O, modems,...)
Intelligent UART processing
Data encryption
Bar-code reader
Graphics tablet
CRT terminals
Modem controller

VIDEO

Video terminal controllers
Keyboard encoder/transmitter
Intelligent high resolution graphics peripherals
Games control

Copyright © 1983 by Texas Instruments Incorporated.

TEXAS INSTRUMENTS
PROGRAMMABLE PRODUCTS DIVISION · M/S 6432
POST OFFICE BOX 1443 · HOUSTON, TEXAS 77001

TMS1000 4-Bit Microcomputer Family

For high-volume low-cost applications, no other microcomputer family has enjoyed the continued popularity of the TMS1000 family of 4-bit single-chip microcomputers. Since its introduction in 1974, the TMS1000 family has become the world's most widely used microcomputer, with over 100 million units shipped for applications as diverse as microwave ovens, electronic toys and games, television tuners, dishwashers, radios, scanners, and security systems.

Available in PMOS, CMOS, and LMOS (Low-power PMOS) processes with wide variations of ROM/RAM, package sizes, I/O, output drive capability, and clock speeds, the family offers well over 40 base-sets to fit into various end-equipment applications at the lowest system cost. The unique functionality of the microcomputer is determined by the customer-specified software that is mask-programmed into the ROM at the factory.

Several preprogrammed versions are available to evaluate features of the TMS1000 family. Contact local field sales offices for further information.

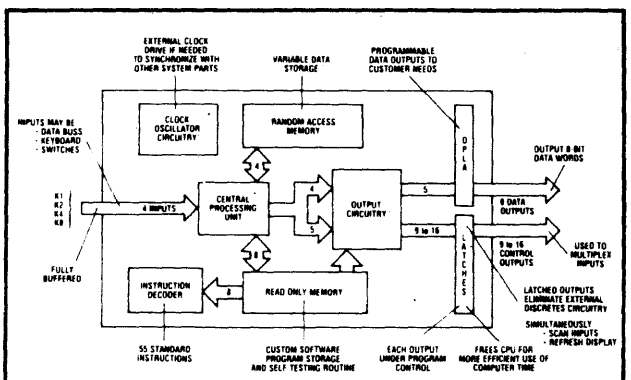

TYPICAL BLOCK DIAGRAM

The TMS1000 family is well supported with extensive design, test and application support. A complete line of development tools in the form of ROMless evaluator chips, System Evaluator boards, and AMPL 1000 systems (consisting of Editor, Assembler, In-Circuit Emulators, and diagnostics) are available to the user to develop his custom software.

Texas Instruments continues to lead the industry in bringing 4-bit microcomputer power to within the practical (cost effective) reach of more and more applications every year. Cost effectiveness at the chip level through volume learning curve experience and at the system level through on-board interface circuitry have been the banners of the TMS1000 family's success. This, coupled with field proven reliable performance, will continue to serve the future needs of the market place . . . a marketplace limited only by entrepreneuric qualities of the human mind!

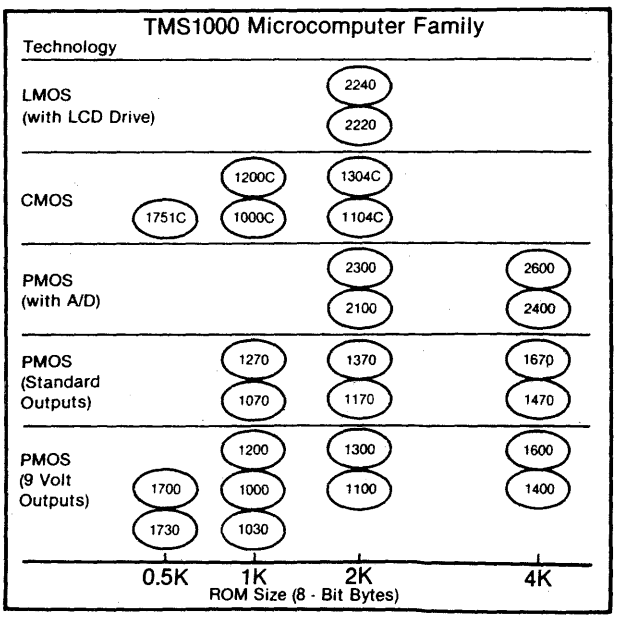

TMS1000 PMOS Series

FEATURES		DEVICE NUMBER													
		TMS1730	TMS1700	TMS1000	TMS1070	TMS1200	TMS1270	TMS1100	TMS1170	TMS1300	TMS1370	TMS1400	TMS1470	TMS1600	TMS1670
Supply Voltage (V)		9/15	9/15	9/15	9/15	9/15	9/15	9/15	9/15	9/15	9/15	9	9	9	9
ROM (8-Bit Bytes)		0.5 K	0.5 K	1 K	1 K	1 K	1 K	2 K	2 K	2 K	2 K	4 K	4 K	4 K	4 K
Data RAM (Bits)		32×4	32×4	64×4	64×4	64×4	64×4	128×4	128×4	128×4	128×4	128×4	128×4	128×4	128×4
I/O	K/L Inputs	4/0	4/0	4/0	4/0	4/0	4/0	4/0	4/0	4/0	4/0	4/0	4/0	4/4	4/4
	'R' Individually Addressed Outputs	6	9	11	11	13	13	11	11	16	16	11	10	16	16
	'O' Parallel Latched Data Outputs	5	8	8	8	8	10	8	8	8	8	8	8	8	8
Subroutine Levels		1	1	1	1	1	1	1	1	1	1	3	3	3	3
Instruction Cycle (μSEC)		10	10	10	15	15	15	10	15	15	15	11	11	11	11
Output Voltage (V)		−15/−20	−15/−20	−15/−20	−30/−35	−15/−20	−30/−35	−15/−20	−30/−35	−15/−20	−30/−35	−15	−30	−15	−30
Package Pin Count		20	28	28	28	40	40	28	28	40	40	28	28	40	40
Power Dissipation (mW)		36/68	36/68	36/68	45/105	36/68	45/105	45/105	45/105	45/105	45/105	63	63	63	63
Evaluator (ROMless Chip)		SE1000P						SE1100P				SE1400P			
Emulator Support		AMPL1000										AMPL1400			

Copyright © 1983 by Texas Instruments Incorporated.

© IC MASTER 1984

TEXAS INSTRUMENTS
PROGRAMMABLE PRODUCTS DIVISION · M/S 6432
POST OFFICE BOX 1443 · HOUSTON, TEXAS 77001

Development Support

TI offers 3 forms of development support: eXtended Development System (XDS), SE70P161 prototyping device, and an evaluation module (EVM) board. The XDS system provides high-performance, low-cost development with in-circuit emulation, trace and breakpoint capability, and a high-level debug language. Please see XDS in the MPU development systems section for additional information. The SE70P161 allows form-factor emulation via an EPROM socketed (piggyback style) on top of the SE70P161. The EVM board provides extremely low-cost in-circuit emulation of the single-chip mode. Its two serial ports and cassette interface allow it to function as a stand-alone development system or to accept text files from a host CPU. It also has EPROM-programming capability.

Applications for the TMS7000

AUTOMOTIVE

Dashboard controls
Engine control
Instrument cluster control
Climate control
Radio
Speed control
Safety options (lights on, seat belt,...)
Speech
Failure alarms
Electronic locks
Wiper motor control
Security systems
Video displays

RETAIL

Bar-code readers
Data encryption
Automatic tellers
Point-of-sale terminals
Scales

TELECOMMUNICATIONS

Feature phones
Auto dialers

CONSUMER

Appliances
Toys and games
Home computers
Cable TV
Security systems
Clocks (talking)
Climate adjustment controls
Advanced appliances
Intelligent telephones
Home entertainment
Educational products
Stereo systems

CONTROL SYSTEMS

Instrumentation
Servo links
Position and rate control
Motor control
Remote feedback
Robotics
Remote sensing (temperature, pressure,...)
Machine controllers
Inventory systems
Sequences

COMPUTER

Portable computers
Printers
Floppy disk controller
Data line buffers/spoolers
Multi-processor networking
Intelligent peripherals (speech, I/O, modems,...)
Intelligent UART processing
Data encryption
Bar-code reader
Graphics tablet
CRT terminals
Modem controller

VIDEO

Video terminal controllers
Keyboard encoder/transmitter
Intelligent high resolution graphics peripherals
Games control

Copyright © 1983 by Texas Instruments Incorporated.

TEXAS INSTRUMENTS
PROGRAMMABLE PRODUCTS DIVISION · M/S 6432
POST OFFICE BOX 1443 · HOUSTON, TEXAS 77001

TMS1000 4-Bit Microcomputer Family

For high-volume low-cost applications, no other microcomputer family has enjoyed the continued popularity of the TMS1000 family of 4-bit single-chip microcomputers. Since its introduction in 1974, the TMS1000 family has become the world's most widely used microcomputer, with over 100 million units shipped for applications as diverse as microwave ovens, electronic toys and games, television tuners, dishwashers, radios, scanners, and security systems.

Available in PMOS, CMOS, and LMOS (Low-power PMOS) processes with wide variations of ROM/RAM, package sizes, I/O, output drive capability, and clock speeds, the family offers well over 40 base-sets to fit into various end-equipment applications at the lowest system cost. The unique functionality of the microcomputer is determined by the customer-specified software that is mask-programmed into the ROM at the factory.

Several preprogrammed versions are available to evaluate features of the TMS1000 family. Contact local field sales offices for further information.

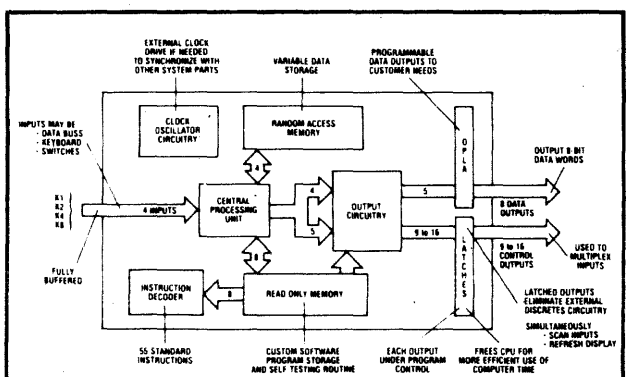

TYPICAL BLOCK DIAGRAM

The TMS1000 family is well supported with extensive design, test and application support. A complete line of development tools in the form of ROMless evaluator chips, System Evaluator boards, and AMPL 1000 systems (consisting of Editor, Assembler, In-Circuit Emulators, and diagnostics) are available to the user to develop his custom software.

Texas Instruments continues to lead the industry in bringing 4-bit microcomputer power to within the practical (cost effective) reach of more and more applications every year. Cost effectiveness at the chip level through volume learning curve experience and at the system level through on-board interface circuitry have been the banners of the TMS1000 family's success. This, coupled with field proven reliable performance, will continue to serve the future needs of the market place . . . a marketplace limited only by entrepreneuric qualities of the human mind!

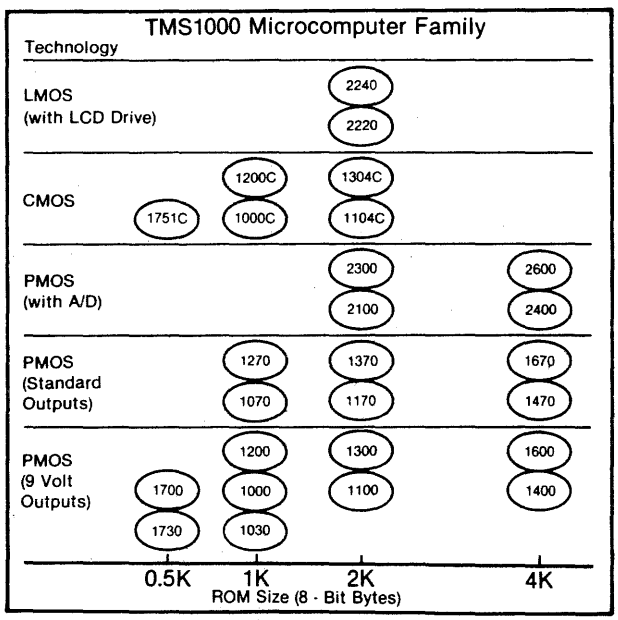

TMS1000 PMOS Series

FEATURES		DEVICE NUMBER													
		TMS1730	TMS1700	TMS1000	TMS1070	TMS1200	TMS1270	TMS1100	TMS1170	TMS1300	TMS1370	TMS1400	TMS1470	TMS1600	TMS1670
Supply Voltage (V)		9/15	9/15	9/15	9/15	9/15	9/15	9/15	9/15	9/15	9/15	9	9	9	9
ROM (8-Bit Bytes)		0.5 K	0.5 K	1 K	1 K	1 K	1 K	2 K	2 K	2 K	2 K	4 K	4 K	4 K	4 K
Data RAM (Bits)		32×4	32×4	64×4	64×4	64×4	64×4	128×4	128×4	128×4	128×4	128×4	128×4	128×4	128×4
I/O	K/L Inputs	4/0	4/0	4/0	4/0	4/0	4/0	4/0	4/0	4/0	4/0	4/0	4/0	4/4	4/4
	'R' Individually Addressed Outputs	6	9	11	11	13	13	11	11	16	16	11	10	16	16
	'O' Parallel Latched Data Outputs	5	8	8	8	8	10	8	8	8	8	8	8	8	8
Subroutine Levels		1	1	1	1	1	1	1	1	1	1	3	3	3	3
Instruction Cycle (μSEC)		10	10	10	15	15	15	10	15	15	15	11	11	11	11
Output Voltage (V)		−15/−20	−15/−20	−15/−20	−30/−35	−15/−20	−30/−35	−15/−20	−30/−35	−15/−20	−30/−35	−15	−30	−15	−30
Package Pin Count		20	28	28	28	40	40	28	28	40	40	28	28	40	40
Power Dissipation (mW)		36/68	36/68	36/68	45/105	36/68	45/105	45/105	45/105	45/105	45/105	63	63	63	63
Evaluator (ROMless Chip)		SE1000P						SE1100P				SE1400P			
Emulator Support		AMPL1000										AMPL1400			

Copyright © 1983 by Texas Instruments Incorporated.

TEXAS INSTRUMENTS
PROGRAMMABLE PRODUCTS DIVISION · M/S 6432
POST OFFICE BOX 1443 · HOUSTON, TEXAS 77001

TMS1000 CMOS Series

FEATURES		TMS1751**	TMS1000C	TMS1200C	TMS1104C	TMS1304C
Supply Voltage Range (V)		3 - 6	3 - 6	3 - 6	3 - 6	3 - 6
ROM (8-Bit Bytes)		0.5 K	1 K	1 K	2 K	2 K
Data RAM (Bits)		32 X 4	64 X 4	64 X 4	256 X 4	256 X 4
I/O	K/L Inputs	4/0	4/0	4/4	4/0	4/0
	'R' Individually Addressed Output Latches	7	10	16	10	10
	'O' Parallel Latched Data Outputs	(4)	8	8	8	8
Subroutine Levels		3	3	3	3	3
Instruction Cycle (μSEC)		6	6	6	6	6
Output Levels (V)		5	5	5	5	5
Package Pin Count		16	28	40	28	40
Power Dissipation	Operating Mode (mW @ 5 V)	3	3.5	3.5	5	5
	Halt Mode (μW @ 5 V)	—	0.5	0.5	1	1
Evaluator (ROMless Chip)		SE1000C			SE1104C**	
Emulator Support		AMPL1000C			AMPL1104C**	

TMS2100 Series (Expanded I/O with A/D Converters)

FEATURES		TMS2100	TMS2170	TMS2300	TMS2370	TMS2400**	TMS2470**	TMS2600**	TMS2670**
Supply Voltage Range (V)		9	9	9	9	9	9	9	9
ROM (8-Bit Bytes)		2 K	2 K	2 K	2 K	4 K	4 K	4 K	4 K
Data RAM (Bits)		128 X 4	128 X 4	128 X 4	128 X 4	256 X 4	256 X 4	256 X 4	256 X 4
I/O	'K' and 'J' Inputs	4	4	8	8	4	4	8	8
	'R' Bi-Directional	4	4	4	4	4	4	4	4
	'R' Individually Addressed Output	7	6	15	14	7	6	15	14
	'O' Parallel Latched Data Outputs	8	8	8	8	8	8	8	8
	Interrupts	1	1	1	1	1	1	1	1
	Timer/ECI	Yes/No	Yes/No	Yes/No	Yes/No	Yes/No	Yes/No	Yes/No	Yes/No
	8-Bit A/D	1	1	2	2	1	1	4	4
	Zero-cross Detector	Yes	Yes	Yes	Yes	Yes	Yes	Yes	Yes
Subrouting Levels		4	4	4	4	4	4	4	4
Instruction Cycle (μSEC)		12	12	12	12	12	12	12	12
Output Levels (V)		- 15	- 35	- 15	- 35	- 15	- 35	- 15	- 35
Package Pin Count		28	28	40	40	28	28	40	40
Power Dissipation (mW)		90	90	90	90	105	105	105	105
Evaluator (ROMless Chip)		SE2100				SE2400			
Emulator Support		AMPL2100				AMPL2400**			

TMS2200 LMOS Series (Low Power)

FEATURES		TMS2220L	TMS2240L
Supply Voltage Range (V)		3	3
ROM (8-Bit Bytes)		2 K	2 K
Data RAM (Bits)		128 X 4	128 X 4
I/O	K/L Inputs	4/0	4/0
	'R' Lines	4 - 8	8 - 13
LCD Drive	Duty Cycle	1/4	1/4
	Select Lines	8 - 12	15 - 20
	Display Digits	4 - 6	7.5 - 10
	Segments	32 - 48	60 - 80
Subrouting Levels		3	3
Instruction Cycle (μSEC)		18	18
Output Levels (V)		6	6
Package Pin Count		28	40
Power Dissipation	Slow Mode (μW)	180	180
	Fast Mode (μW)	1200	1200
Evaluator (ROMless Chip)		SE2240L	
Emulator Support		AMPL2240**	

**New Product

Peripheral Products

DEVICE	FEATURES
Capacitive-Touch Keyboard Interface	TMS1976
4- to - 16 Line I/O Expander	TMS1024
4 - to - 28 Line I/O Expander	TMS1025
Sound Generator 2 - tone generator 1 - noise generator	TMS3546
Power Supply Controller (3V to 9V)	TL496
A/D Converter (0.1% accuracy)	TL505
Low Cost A/D Converter (2% accuracy)	TL507
Current Driver	SN75491
Current Driver (Inverting)	SN75492

Copyright © 1983 by Texas Instruments Incorporated.

TEXAS INSTRUMENTS
PROGRAMMABLE PRODUCTS DIVISION · M/S 6432
POST OFFICE BOX 1443 · HOUSTON, TEXAS 77001

TMS1000 Family Development Systems

The TMS1000 family of microcomputers are supported by the AMPL1000 line of development systems. The AMPL1000 system can be broken into software and hardware components. The hardware consists of an emulator buffer with specific SE emulator boards, while the software consists of a completely self-contained editor, assembler, emulator control, and diagnostics. All AMPL1000 development systems run on TI 990 host computers.

TMS1000 AMPL Development Systems

EMULATOR KITS	DEVICES SUPPORTED
TMAM6075	TMS1000/1070/1100/1170/1200/1270/1300/1370/1700 PMOS Family Members
TMAM6071	TMS1000/1070/1100/1170/1200/1300 CMOS Family Members
TMAM6073	TMS1400/1470/1600/1670/ PMOS Family Members
TMAM6081	TMS2100/2170/2300/2370 PMOS Family Members
TMAM6082	TMS2220/2240 LMOS Family Members

The following is a list of ROMless Microcomputers to aid the user in ensuring that his algorithm in EPROM is functionally correct before he commits it to a MASK-ROM device.

System Evaluators

SYSTEM EVALUATOR	DEVICES SUPPORTED
SE1000P	TMS1000/1070/1200/1270/1700 PMOS Family Members
SE1100P	TMS1100/1170/1300/1370 PMOS Family Members
SE1000C	TMS1000/1200 CMOS Family Members
SE1104C**	TMS1104/1304/ CMOS Family Members
SE1400P	TMS1400/1470/1600/1670/ PMOS Family Members
SE2100P	TMS2100/2170/2300/2370 PMOS Family Members
SE2400P**	TMS2400/2470/2600/2670 PMOS Family Members
SE2130P	TMS2132 PMOS Family Members
SE2220L	TMS2220/2240 LMOS Family Members

Texas Instruments also offers the ROMless microcomputers listed above with the following fully assembled and tested evaluation boards.

System Evaluator Boards

EVALUATOR BOARDS	BOARD CONTENTS
SEB1000P	PCB Assembly With SE1000P, EPROM Program memory and 0-PLA PROM
SEB1100P	PCB Assembly With SE1100P, EPROM Program memory and 0-PLA PROM
SEB1000C	PCB Assembly With SE1000C, EPROM Program memory and 0-PLA PROM
SEB1004C**	PCB Assembly With SE1004C, EPROM Program memory and 0-PLA PROM
SEB1400P	PCB Assembly With SE1400P, EPROM Program memory and 0-PLA PROM
SEB2100P	PCB Assembly With SE2100P, EPROM Program memory and 0-PLA PROM
SEB2400P**	PCB Assembly With SE2400P, EPROM Program memory and 0-PLA PROM
SEB2130P**	PCB Assembly With SE2130P, EPROM Program memory and 0-PLA PROM
SEB2220L	PCB Assembly With SE2220L, EPROM Program memory and 0-PLA PROM

**New Product

Copyright © 1983 by Texas Instruments Incorporated.

TEXAS INSTRUMENTS
PROGRAMMABLE PRODUCTS DIVISION · M/S 6432
POST OFFICE BOX 1443 · HOUSTON, TEXAS 77001

Microprocessor Peripherals

The TI Peripheral Family contains a wide selection of system support circuits which easily and cost effectively perform peripheral and interface functions, such as data communications, memory functions, special signal processing, and display. Included are controllers, latches, encoders, and others. The bus structure, architecture, I/O features, and other characteristics of these peripheral and interface circuits are compatible with members of the 99000 Family as well as most common microprocessors.

TI's general purpose peripherals work with any microprocessor and any microcomputer with a memory mapped I/O port. TI microprocessors and other popular microprocessor systems are achieving reduced parts counts, lower cost, and improved reliability through these powerful peripheral components.

Peripheral and Interface Circuits

FUNCTION	DEVICE NUMBER	TECHNOLOGY	INTERFACE TO CPU	DATA TRANSFER RATE (max)	NO. OF PINS	PACKAGE	GENERAL PURPOSE PERIPHERAL
Digital I/O							
PROGRAM SYSTEM INTERFACE	TMS9901*	NMOS	Serial, CRU	NA	40	N,J	NO
Clock Circuit							
Clock Driver for 9900	TIM9904*	LS TTL	Parallel	4MHz	16	N	NO
Communications Interface							
Async. Comm. Controller	TMS9902A*	NMOS	Serial, CRU	19.2 K Baud	18	N	NO
Sync. Comm. Controller	TMS9903*		Serial, CRU	19.2 K Baud	20	J	
IEEEE 488 Interface	TMS9914A	NMOS	Parallel	1 M Bytes/S	40	N,J	Yes
FSK Modem-Bell 103 Comp	TMS99532A		Parallel	300 Bits/S	18		
FSK Modem-CCITT	TMS99534**		Parallel	300 Bits/S	18		
Pulse, Dual Tone Dialer	TMS99531		Parallel	N/A	14		
Data Encryption Unit	TMS99541**		Parallel	5.1 K/Baud	40		
Memory Interface							
Multi-Processor Interface	TMS9650	NMOS	Parallel	NA	40	N,J	Yes
Video Interface							
Video Display Processor — Composite Video	TMS9118†	NMOS	Parallel	NTSC Composite Video	40	N,J	Yes
Video Display Processor — Color difference output	TMS9128†			525 Line			
Video Display Processor — Color difference output	TMS9129†			625 Line			
CRT Controller	TMS9937/5037**	NMOS	Parallel	NA	40	N,J	Yes

*TMS9900 compatible only
**SMC second source
†Uses TMS4416 or TMS4116 VRAM
NA = Not Applicable
All Power Supplies are rated at +5V

Copyright © 1983 by Texas Instruments Incorporated.

TEXAS INSTRUMENTS
PROGRAMMABLE PRODUCTS DIVISION · M/S 6432
POST OFFICE BOX 1443 · HOUSTON, TEXAS 77001

Microprocessor Peripherals

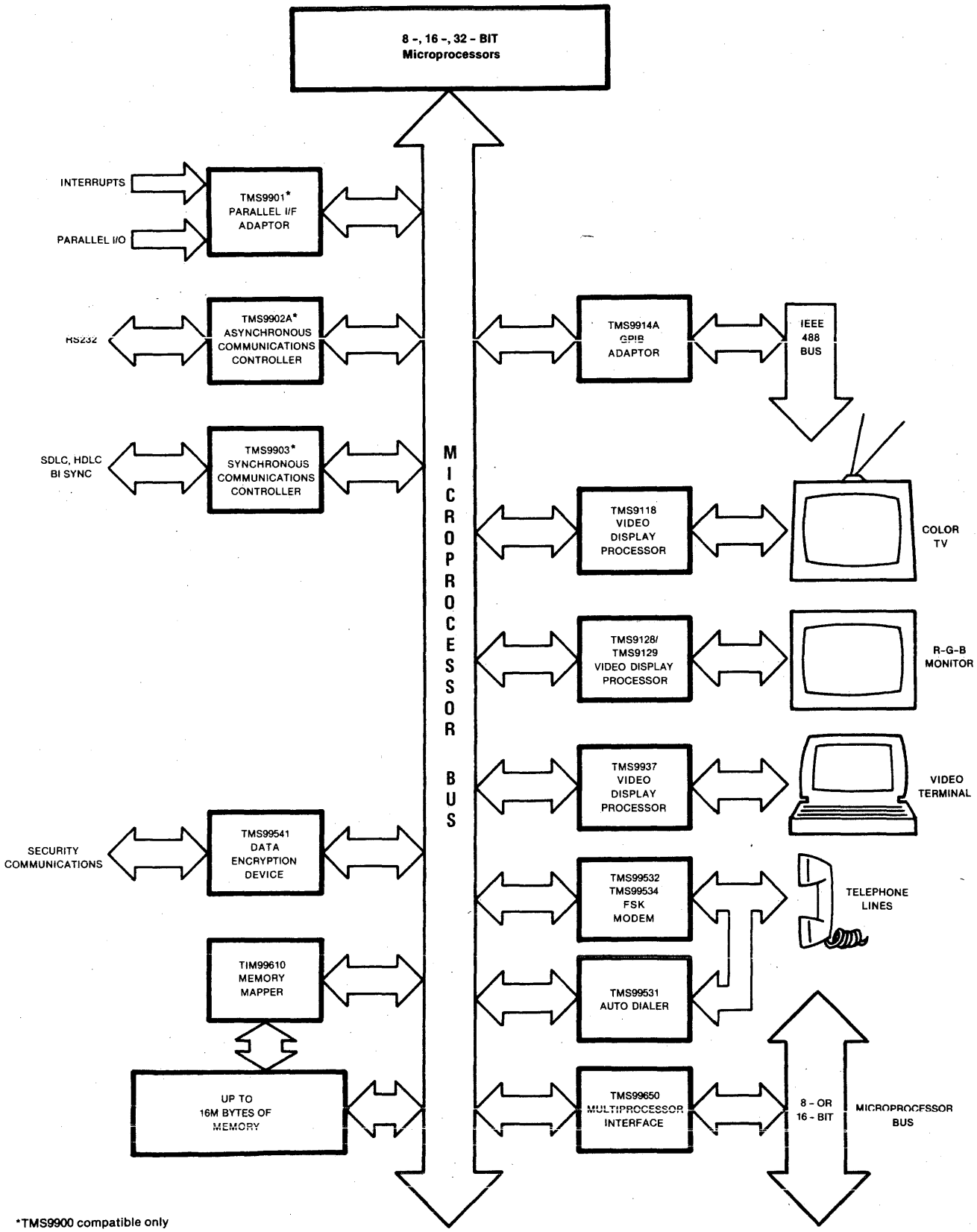

*TMS9900 compatible only

Copyright © 1983 by Texas Instruments Incorporated.

TEXAS INSTRUMENTS
PROGRAMMABLE PRODUCTS DIVISION · M/S 6432
POST OFFICE BOX 1443 · HOUSTON, TEXAS 77001

Microprocessor Peripherals

TMS9914A GPIB Adapter

The TMS9914A provides an interface between a Microprocessor System and the General Purpose Interface Bus (GPIB) specified in the IEEE-488 1975-78 standards and the IEEE-488A 1980 supplement. The device is controlled and configured through 8-bit memory mapped registers and enables all aspects of the standards to be implemented, including talker, listener and controller. The TMS9914A is used when an intelligent instrument is required to communicate with an IEEE-488 GPIB. It performs the interface function between the microprocessor and bus and relieves the processor of the task of maintaining the IEEE protocol. By utilizing the interrupt capabilities of the device, the bus does not have to be continually polled, and fast responses to changes in the interface configuration can be achieved.

KEY FEATURES

- Handles all IEEE-488 1975/78 functions
- Compatible with IEEE-488A 1980 supplement
- Talker and listener function (T,TE, L, LE)
- Automatic source and acceptor handshakes (SH, AH)
- Controller with pass control
- System controller capabilities
- Device trigger and device clear capabilities (DT, DC)
- Optional automatically cleared "request service bit"
- Parallel and serial poll facilities (PP)
- Remote/local function with local lockout (RL)
- Single or dual primary addressing
- Secondary address capabilities
- Direct interface to SN75160/161/162 bus transceivers with no additional logic
- Compatible with most microprocessors
- Direct memory access facilities
- Memory-mapped microprocessor interface

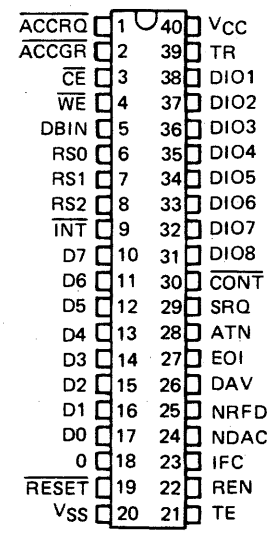

TMS9914A PIN ASSIGNMENTS

TYPICAL TMS9914A APPLICATION

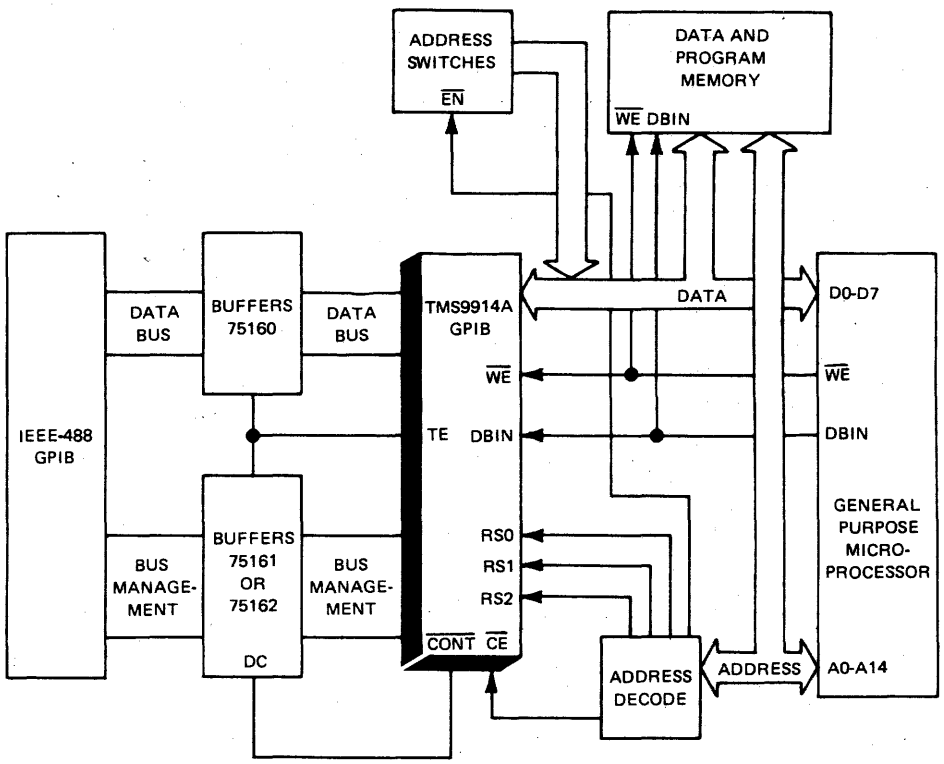

Copyright © 1983 by Texas Instruments Incorporated.

TEXAS INSTRUMENTS
PROGRAMMABLE PRODUCTS DIVISION · M/S 6432
POST OFFICE BOX 1443 · HOUSTON, TEXAS 77001

Microcomputer Peripherals

TMS99532A, TMS99534A* Single chip MODEMs

The TMS99532A modem is a telecommunications device that transmits and receives serial, binary data over the switched telephone network using frequency-shift-keyed (FSK) modulation. It is compatible with the Bell 103 series data sets and will communicate at up to 300 bits per second. The TMS99532A provides all the necessary modulation, demodulation and filtering required to implement a serial, asynchronous communications link. It is designed for users not expert in the telecommunications field and is an easily implemented cost-effective alternative to standard discrete modem design. Large scale integration NMOS technology provides the advantages of small size, low power and increased reliability. The TMS99532A modem design assures compatibility with a broad installed base of low-speed modems and acoustic couplers. Applications include interactive terminals, desk-top computers, point-of-sale (POS) terminals and credit verification systems.

KEY FEATURES

- Bell 103 compatible
- Single LSI chip solution requiring only 1 dual op-amp and 13 discretes
- All filtering, modulation and demodulation on chip
- Simplex, half-duplex and full-duplex capability
- Originate and answer modes
- Data rates from zero to 300 BPS
- Adjustable carrier detect timing
- Crystal controlled oscillator on chip
- CCITT V.25- compatible answer tone
- Analog loopback test mode
- TTL- compatible digital interface
- N- Channel silicon gate process (NSAG)
- Switched capacitor technology
- Housed in space-saving 18-pin DIP

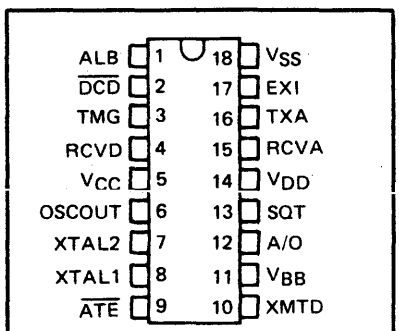

TMS99532A Pin Assignments

*The TMS99534A single chip modem has all of the same features as the TMS99532A except that it is CCITT V.21 compatible for use in Western Europe. The software and hardware interface is identical. The bandpass frequencies in European MODEMS are altered to be optimum for the equipment already in place in Europe.

TMS99531 Dual-Tone and Pulse Dialer

The TMS99531 Dialer is a telecommunications device compatible with the Bell telephone switching network. It provides both dual-tone multiple-frequency (DTMF) and pulse dialing. In addition to the usual common telephone usage, the dialer can be employed with transaction (POS and/or credit) terminals, digital voice messagers, radio and mobile telephones and remote/process control. Cost/Performance advantages make the dialer highly competitive with other dual tone/pulse dialers currently available.

In the pulse mode the TMS99531 can dial all 10 digits (0-9). In the dual-tone mode it can dial the 12 dual-tone combinations (0-9, *, #) on the standard pushbutton telephone keypad. Both fixed and interdigit timing in either mode is available.

External circuits required by the TMS99531 are conveniently provided by the TMS99532A frequency-shift keyed modem (300 BPS). If the user chooses not to use the TMS99532A, he will need a 4.032-MHz oscillator and a low-pass filter to remove higher harmonics.

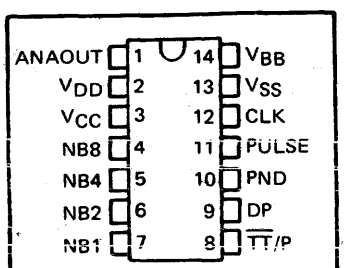

TMS99531 PIN ASSIGNMENTS

KEY FEATURES

- Standard N-channel silicon gate processing using switched cap technology
- Identical 4-Bit addressing for both pulse and DTMF dialing
- Fixed digit and interdigit timing for both pulse and DTMF dialing
- No limit to number of digits that can be sent
- Accelerated pulse rate for minimum checkout
- Standard 12 frequency-pair combinations, plus single tone capability
- Stable frequencies and amplitudes
- Less than 5 percent total harmonic distortion in voice band
- High group tone pre-emphasis
- TTL-compatible input-output interface
- Subsystem complement to the TMS99532A FSK modem

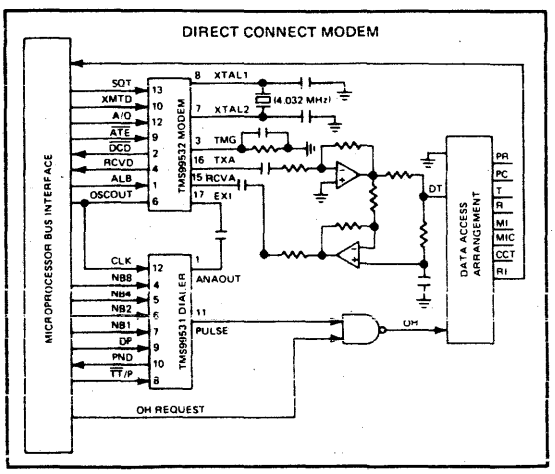

Copyright © 1983 by Texas Instruments Incorporated.

© IC MASTER 1984

TEXAS INSTRUMENTS
PROGRAMMABLE PRODUCTS DIVISION · M/S 6432
POST OFFICE BOX 1443 · HOUSTON, TEXAS 77001

Microprocessor Peripherals

Video Display Processors (VDP)

The control of color television and color monitor graphics with mixtures of text, animated pictorials, and a variety of color patterns is easily achieved in a low-cost system by selecting the TI VDP family. This VDP family has the ability to send out composite video or color difference and luminance outputs. The picture storage is highly compressed into dynamic RAMs which are refreshed transparently — no extra refresh hardware. The video memory space consists of two TMS4416 (16 K X 4) or eight TMS4116 (16 K X 1) when using the TMS9118, TMS9128 or TMS9129.

The VDP Family contains the following devices:

DEVICE	OUTPUT COMPATIBILITY	VRAM COMPATIBILITY
TMS9118	• Composite Video • 525 Line Format • NTSC-N. American	TMS4416 16 K X 4 or TMS4116 16 K X 1
TMS9128	• R-Y • B-Y Color Difference • Y Luminance Outputs • 525 Line Format • NTSC - N. American	TMS4416 16 K X 4 or TMS4116 16 K X 1
TMS9129	• R-Y • B-Y Color Difference • Y Luminance Outputs • 625 Line Format • PAL - European	TMS4416 16 K X 4 or TMS4116 16 K X 1

Standard VDP Family Features

- Single-chip graphics controller solution
- 256 X 192 color pixel resolution
- 32 animated sprites
  - — easily moved objects
  - — 1 pixel resolution
  - — 4 sprite sizes up to 32 X 32 pixels
  - — 32 overlapping planes, 3-D simulation
- 15 unique colors (plus transparent)
- 40 character X 24 line text display
- 3 optional background pattern modes:

GRAPHICS MODE	SCREEN GRID (HOR. X VERT.)	PATTERN SIZE (PIXELS)	# COLORS
I II Multi-Color	32 X 24 32 X 24 64 X 48	8 X 8 8 X 8 4 X 4	2/Pattern 2/Line 15

- Direct wiring to video RAMs
- General 8-Bit CPU interface
- 40-pin plastic DIP
- N-channel MOS, single 5 V supply

SYSTEM BLOCK DIAGRAM

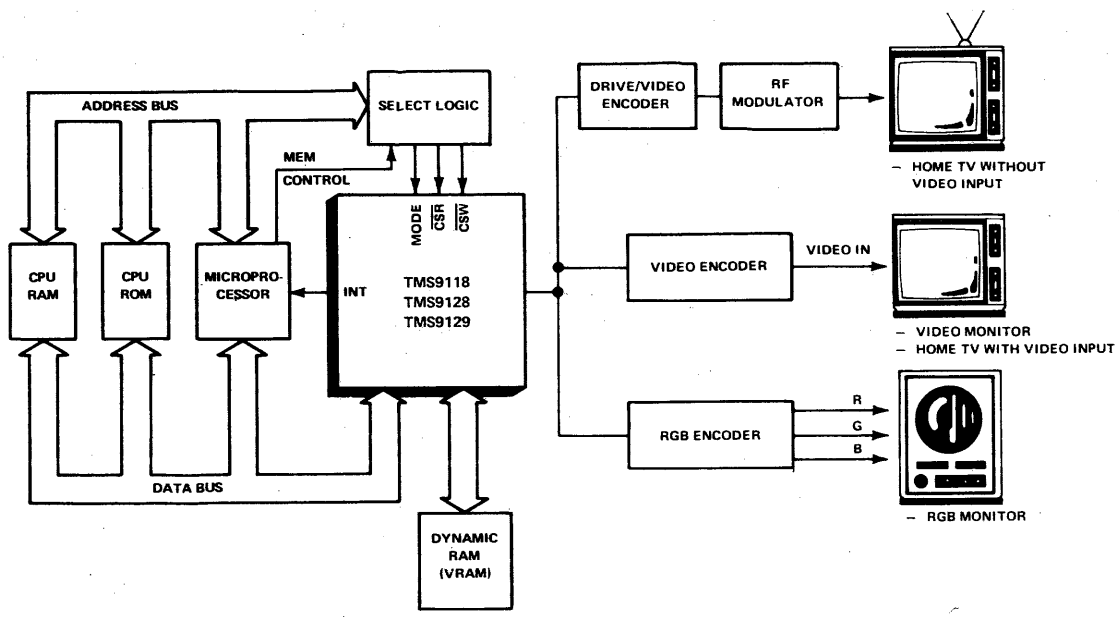

Copyright © 1983 by Texas Instruments Incorporated.

TEXAS INSTRUMENTS
PROGRAMMABLE PRODUCTS DIVISION · M S 6432
POST OFFICE BOX 1443 · HOUSTON, TEXAS 77001

SPEECH PRODUCTS

Let Your Product Speak For Itself

Whether it's appliances, automotive consoles, transaction terminals, office systems, telecommunications, robotics, or electronic toys and games, TI's Solid State Speech™ technology promises to have a dramatic impact on design, now, and for generations to come.

TI's Solid State Speech technology provides a revolutionary approach to the design of man-machine interfaces. A wide variety of applications can benefit from this technology due to the high intelligibility, reliability, and low cost of Solid State Speech reproduction.

The development of Solid State Speech technology at Texas Instruments began with the analysis of the human mechanisms for production and perception of speech. Based on the mechanisms of natural speech production, a model of the speech production process was implemented using digital signal processing techniques. This model is the basis for TI's Solid State Speech products.

The speech recording/processing begins by recording actual human speech, extracting energy and pitch information, and then using Linear Predictive Coding (LPC) analysis to produce data suitable for the digital speech model. These techniques faithfully preserve the character of the speaker's voice, including intonation, accent, dialect, and pitch in any language. Whole phrases and sentences, as well as single words and sounds, can be reproduced, preserving authentic human inflections. The result is more lifelike, natural sounding speech.

Value to the user of TI's LPC technique is its modest memory requirement compared to other approaches. Brute-force storage of speech signals can be accomplished by sampling and converting speech at an 8 to 10-kilohertz clock rate. This results in a digital data rate of 100,000 bits per second of speech. Pulse-coded modulation (PCM) codecs and companding techniques have found acceptance in new, all-digital telecommunications systems. However, their data rate of 64,000 bits per second is still too high for many applications.

Linear Predictive Coding provides speech quality comparable to other techniques, yet it only requires an average data rate of about 1,600 bits per second. With the advent of 128K-bit and larger storage devices, LPC packs minutes of high-quality speech into memories that would hold only one or two seconds of speech using other techniques. To illustrate, a speech reproduction of the words "Texas Instruments" requires approximately 90 times as many bits using digitized speech techniques as it requires with LPC. Using these techniques a single 128K-bit ROM can hold as many as 200 words.

COMPARISON OF SPEECH TECHNIQUES
(Required Encoded Speech Data Rate)

Digitized Speech	**96,000 bits/sec**
PCM Codecs	**64,000 bits/sec**
LPC	**1,600 bits/sec**

© IC MASTER 1984

TEXAS INSTRUMENTS
PROGRAMMABLE PRODUCTS DIVISION · M S 6432
POST OFFICE BOX 1443 · HOUSTON, TEXAS 77001

Voice Synthesis Processors (VSP)

Speech encoding on TI Voice Synthesis Processors is achieved through LPC coding. Codes for twelve synthesis parameters (pitch, energy, and 10 filter coefficients) serve as inputs to the VSP. After being decoded by the VSP, these codes represent a time-varying description of the LPC model of the original voice.

Inputs to the VSP's digital filter takes two forms: periodic and random. The periodic inputs are used to reproduce voiced sounds which have a definite pitch, such as vowel sounds or voiced fricatives (Z,B,D). A random input models unvoiced sounds such as S, F, T, and SH. Separate models generate the voiced and unvoiced excitations. Output from the digital filter drives a digital-to-analog converter, which in turn drives a speaker.

With one TMS6100 128K-bit ROM a TMS5000 Series VSP can produce more than 100 seconds of speech, or about 200 synthesized words. A single TMS5110A or TMS5220A VSP can support up to 16 128K-bit VS Memories, or approximately 3200 words of speech. In addition, the TMS5220A is capable of tapping host storage or off-line storage to produce virtually unlimited vocabularies.

TMS5110A Voice Synthesis Processor

Features
- Interfaces easily to 4-bit microprocessors, such as TI's TMS1000 Family of microcomputers
- A complete voice synthesis system can be designed with 3 chips: TMS5110A VSP, TMS6100 VSM and a TMS1000 microcomputer
- Directly addresses up to 16 TMS6100 VS Memories (128K bits each) for up to 3200 words of speech
- Ideal for high-volume, low-cost applications
- Low average data rate: 1600 bits/second
- TMS5110A can process male and female voices, plus tones, chimes and sound effects.

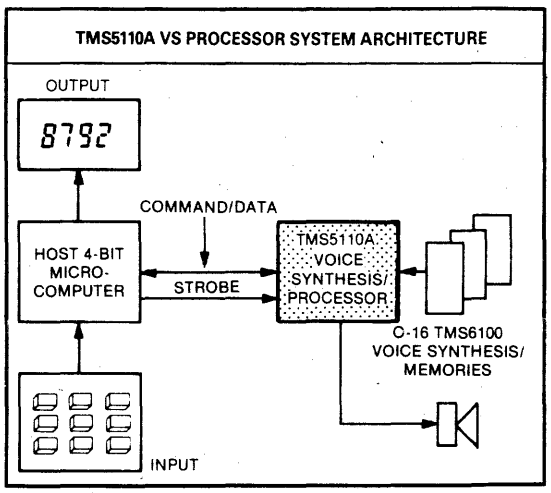

TMS5220A Voice Synthesis Processor

Features
- High-quality voice synthesis for microprocessor-based system
- Low average data rate: 1600 bits/second
- Compatible with 8 and 16-bit microprocessors
- Commands supplied over standard 8-bit data bus
- Speech data can be stored in up to 16 TMS6100 Series VS Memories, in host system storage, or off-line in disk
- Interrupt-driven service request capability
- On-chip FIFO (16-byte) buffers two frames of speech data when coming from host processor
- Can process male and female voices plus tones, chimes and sound effects
- Capable of stringing basic 'allophone' sounds together to form words and phrases

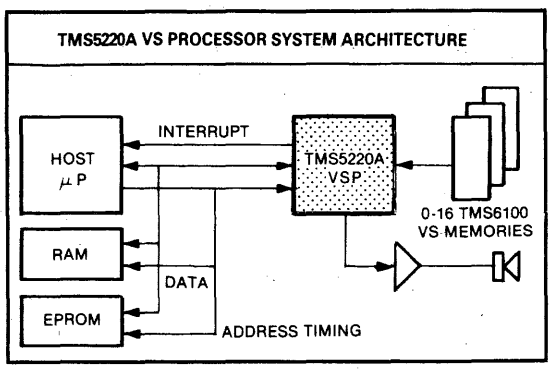

Voice Synthesis Processors Summary

FEATURES	DEVICE NUMBER	
	TMS5110A	TMS5220A
Microprocessors interface (bits)	4	8
Data from ROM	Yes	Yes
Data from microprocessor	No	Yes
Operating Voltage (Volts)	−9	+5 −5
Audio Amplifier	Internal	External
Pitch Coding (Bits)	5	6
Frame Rate (Samples Frame)	200	200
Internal Clock Frequency (KHz)	640	640
ROM Interface (TMS100 128K-Bit)	1-16	1-16
Technology	PMOS	PMOS
DIP Package Type	28 pin	28 pin

* All VSP's are linear predictive coding with 10 poles

© IC MASTER 1984

TEXAS INSTRUMENTS
PROGRAMMABLE PRODUCTS DIVISION · M S 6432
POST OFFICE BOX 1443 · HOUSTON, TEXAS 77001

Voice Synthesis Memories (VSM)

TMS6100 VOICE SYNTHESIS MEMORY

- Low-cost, 128K-bit ROM

TMS6125 VOICE SYNTHESIS MEMORY

- Low-cost, 32K-bit ROM

FEATURES:

- Optimized interface for use with TMS5110 series and TMS5220 series voice synthesis processors
- On-chip address decode logic – no address decoding required for up to 16 VSM's with the TMS6100s or up to 4 VSM's with the TMS6125s
- On-chip memory address register – autoincrements through speech data until stopped by VSP
- Look-up and branch capability allows vocabulary-independent access to speech data on chip

TMS6100 128K VS MEMORY BLOCK DIAGRAM

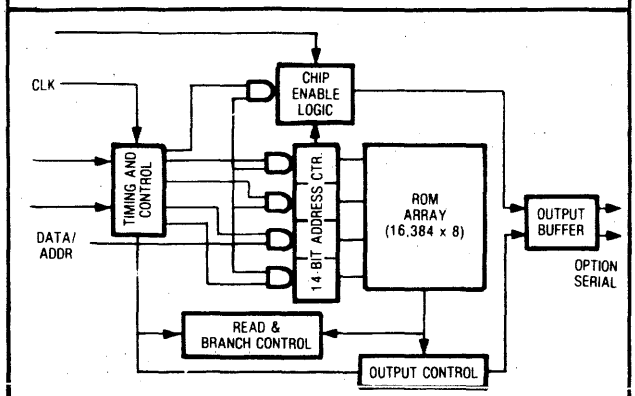

•SIMPLE, DEDICATED INTERFACE TO ALL TI VSPs.

Voice Synthesis Memory Summary

FEATURES	DEVICE NUMBER	
	TMS6100	TMS6125
Memory Storage (Bits)	128K	32K
DIP Package Type	28 pin	16 pin
Oscillator Clock	External	Internal/External
Chip Select Bits	4	2
Address Bits	14	12
Serial Option	Yes	Yes
4-Bit Parallel Option	Yes	Yes
Operating Voltage (Volts)	−9	−9
Access Time (μs)	2	2
Clocking Frequency (kHz)	160	160
Technology	PMOS	PMOS

Speech Library Service

FEATURES:

- Pre-encoded words and phrases available
- Low-cost means of obtaining speech data
- Much faster turnaround than with custom processing
- Adequate quality for prototyping and many applications
- Available through TI Regional Technology Centers

Preprogrammed Speech Vocabulary ROMS

VOCABULARY ROMs (VROMs)

FEATURES:

- Preprogrammed vocabularies for industrial, consumer, and military markets
- Male or female voice intonations offered
- Used with TI's TMS5110A and TMS5220A Voice Synthesis Processors
- Very low-cost synthesized speech
- Ideal for industrial use, low-volume applications, evaluation, and prototyping

Preprogrammed Vocabulary ROMS

DEVICE NUMBER	TYPE OF VOCABULARY	VOICE TYPE OPTION	NO. OF WORDS	VSP INTERFACE	NO. OF BITS
VM61002	Industrial	Male	204	TMS5110A	128K
VM61003	Industrial	Male	206	TMS5220A	128K
VM61004	Time/Weather	Male	139	TMS5220A	128K
VM61005*	Military	Male	148	TMS5220A	128K
VM61006A	Avionics	Male	119	TMS5220A	128K
VM71003	Industrial	Male	50	TMS5110A	32K
VM71004A	Numeric/Time	Male	35	TMS5110A	32K
VM71005A	Numeric/Time	Female	34	TMS5220A	32K

NOTE: All devices have an operating voltage of −9V
* To have a complete avionics vocabulary, the TMS61003, 004, and 005 should be used together

Example:

The VM71004 is a TMS6125 voice synthesis memory precoded for a male voice with a vocabulary of 50 words. Each of the words, syllables, and selected letters of the alphabet is accessed individually and then concatenated to form phrases and sentences.

Vocabulary Data in VM71004A

Word List		
Zero	Hundred	Power
One	Thousand	Check
Two	A	Complete
Three	M	Connect
Four	P	Degrees
Five	T	Minus
Six	And	Repair
Seven	The	Seconds
Eight	Amps	Service
Nine	Hertz	Not
Ten	Farad	Temperature
Eleven	Watts	Start
Twelve	Meter	Stop
Thir-	Ohms	Off
Fif-	Area	On
– teen	Light	Is
Twenty	Pressure	

© IC MASTER 1984

TEXAS INSTRUMENTS
PROGRAMMABLE PRODUCTS DIVISION · M S 6432
POST OFFICE BOX 1443 · HOUSTON, TEXAS 77001

Speech Development System – SDS50

Machines communicating vocally with humans represent a rapidly expanding market. Applications span virtually every market segment from consumer, to automotive, to telecom, to computer, to industrial uses.

While the reproduction of speech from encoded data has been reduced to a readily available chip set, up until very recently encoding speech and storing it in memory has required a great deal more effort and hardware. Texas Instruments Speech Development System is a self-contained speech analysis system which allows one to listen to data encoded for Texas Instruments voice synthesis processors the instant the person has spoken a sentence.

The necessary hardware has been reduced in size from a mainframe computer to a standard Texas Instruments microcomputer and a number of dedicated signal processing boards.

The Speech Development System dramatically reduces the time, effort, and assets involved in putting speech into silicon, by directly converting the spoken text into "Linear Prediction" coefficients and synthesizing the results immediately to the user. Not only does this ensure that users can iteratively optimize the results obtained, but it also permits the particular words to be encoded at short notice.

System Configuration

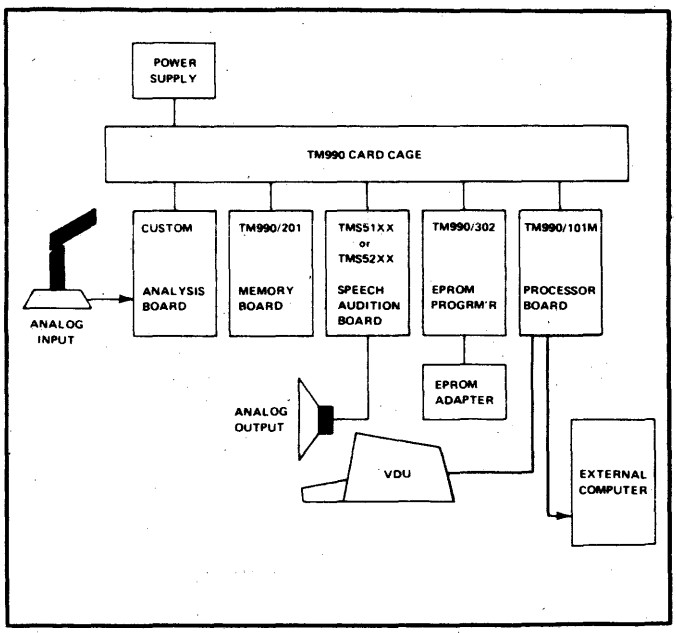

The Speech Development System may be used in three modes:

(1) As a stand-alone demonstration system with only a microphone and a loudspeaker. This is useful for evaluating and training speakers.

(2) As an interactive system with a VDU. This permits speech data to be displayed in terms of the Linear Prediction Codes which are used to regenerate utterances and these can then be edited to improve quality. Further, new sounds can be created in this way. Once the appropriate speech has been captured. The EPROM programmer may be used so that the speech stored in the SDS50 may be downloaded directly into nonvolatile memory for use in an actual product.

(3) As a speech processing front end to a computer. In this, way, speech can be transferred to an archive so that when various words or phrases are needed for subsequent refinement by editing or reuse they can quickly be retrieved from an archived file.

The SDS50 not only fills a gap in the speech synthesis development cycle but also forms the basis for speech development laboratories. The unit's ability to do this is due both to its unique hardware design and the implementation in software of a proprietary algorithm.

NEW PRODUCT BULLETIN

Winchester Disk Controllers WD1010-00/01/05/08

FEATURES

- ST506/SA1000 COMPATIBLE
- MULTIPLE SECTOR READ/WRITE
- UP TO 5MBITS/SEC DATA RATE
- UNLIMITED SECTOR INTERLEAVE
- AUTOMATIC FORMATTING
- CRC/ECC CAPABILITY WITH EXTERNAL ECC GENERATOR/CHECKER
- AUTOMATIC (WD1010-00 ONLY) OR PROGRAMMABLE RETRIES
- VARIABLE SECTOR SIZE
- SINGLE +5V SUPPLY

DESCRIPTION

The WD1010 is an MOS/LSI device which performs the functions of a Winchester Disk Controller/Formatter. It is compatible with the Seagate ST506 and the Shugart Associates SA1000 drives, as well as all other 5¼″ and 8″ products utilizing the same type of interface. On the host side, an 8 bit bi-directional bus accepts all commands, data, and status bytes. The Western Digital WD1000 series of board level controllers are software compatible with the WD1010.

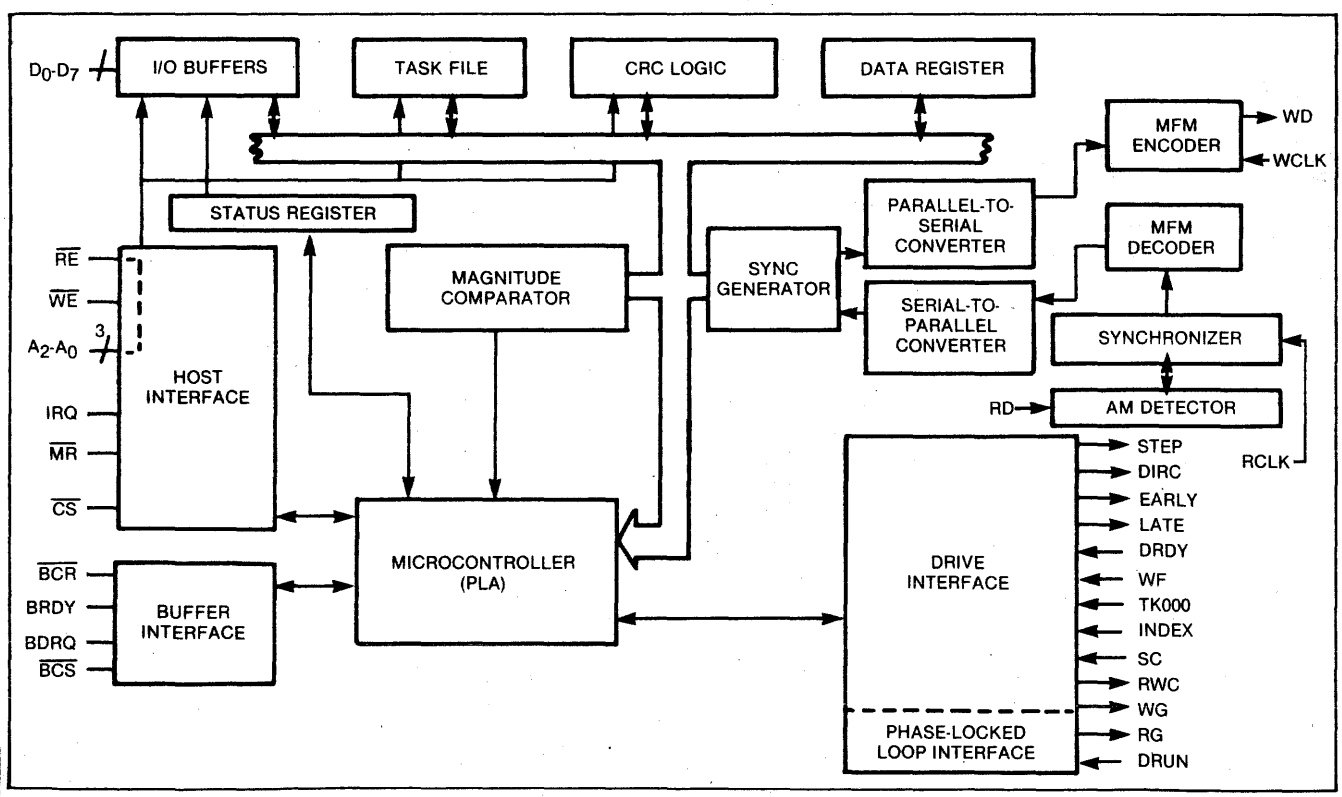

WD1010 BLOCK DIAGRAM

© IC MASTER 1984

PROPOSED APPLICATIONS

The WD1010 is an inexpensive LSI single-chip Winchester controller-formatter. The chip incorporates 80% of the circuitry required for Winchester control, eliminating between 50 and 75 SSI and MSI devices used in earlier designs.

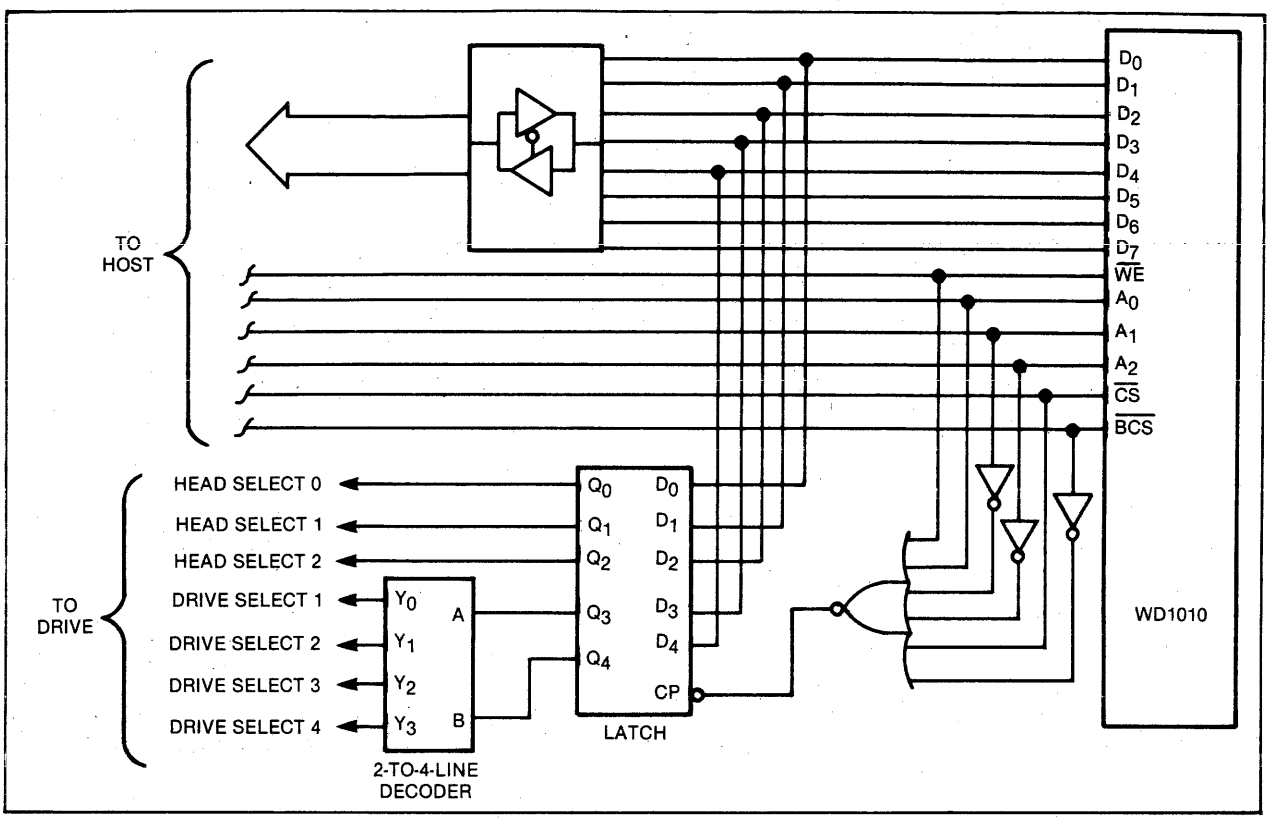

SIMPLIFIED SYSTEM DIAGRAM

WESTERN DIGITAL CORPORATION
2445 McCABE WAY
IRVINE, CALIFORNIA 92714
(714) 863-0102, TWX 910-595-1139

© IC MASTER 1984

NEW PRODUCT BULLETIN

Winchester Data Separator Device WD1011

FEATURES

- 4.34 OR 5.0 MBIT/SEC DATA RATE
- SINGLE +5V SUPPLY
- FM OR MFM OPERATION
- COMPATIBLE WITH THE WD1010
- WRITE CLOCK GENERATOR
- HIGH FREQUENCY DETECTION
- CMOS TECHNOLOGY

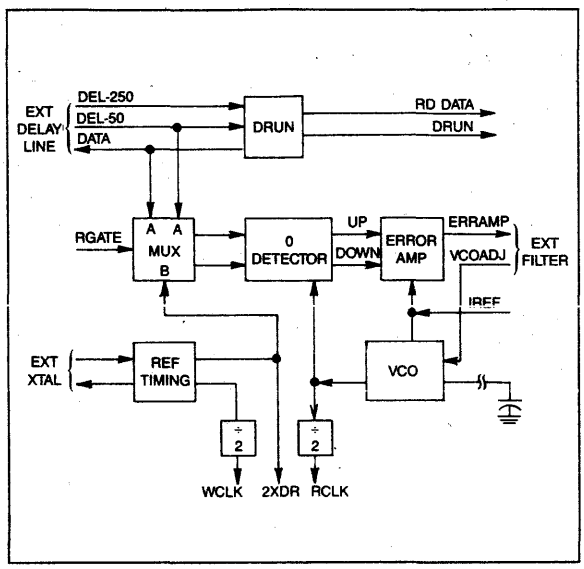

WD1011 BLOCK DIAGRAM

DESCRIPTION

The WD1011 Winchester Data Separator has been designed to replace the complex analog/digital circuitry required for data recovery by Winchester disk drives. Directly interfacing to the WD1010 Winchester Controller device, the WD1011 allows operation of 4.34 Mbit/sec transfer rates. In addition to data recovery, the device provides Write Clock signals for the WD1010 as well as high frequency detection for pre-amble search. Output levels on data pins swing close to the supply rails for increased noise immunity and to minimize layout restrictions.

PROPOSED APPLICATIONS

The WD1011 can be used in conjuction with the WD1010 and WD1012 for Winchester Drive Control as indicated below:

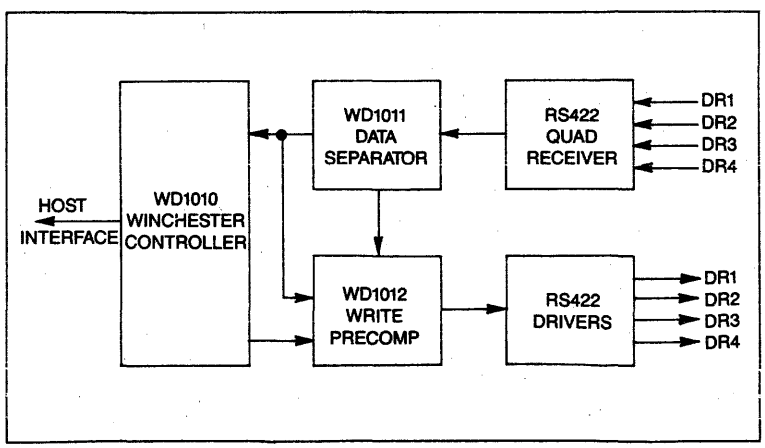

SIMPLIFIED SYSTEM DIAGRAM

2445 McCABE WAY
IRVINE, CALIFORNIA 92714
(714) 863-0102, TWX 910-595-1139

June, 1983

© IC MASTER 1984

WESTERN DIGITAL
CORPORATION

NEW PRODUCT BULLETIN

Write Precompensation Device WD1012

FEATURES

- INTERNAL DELAY LINE
- COMPATIBLE WITH THE WD1010
- INTERFACES DIRECTLY WITH TTL LOGIC
- CMOS TECHNOLOGY
- SINGLE +5VDC SUPPLY
- USED WITH SHUGART, SA1000 SEAGATE TECHNOLOGY AND OTHER COMPATIBLE DRIVES

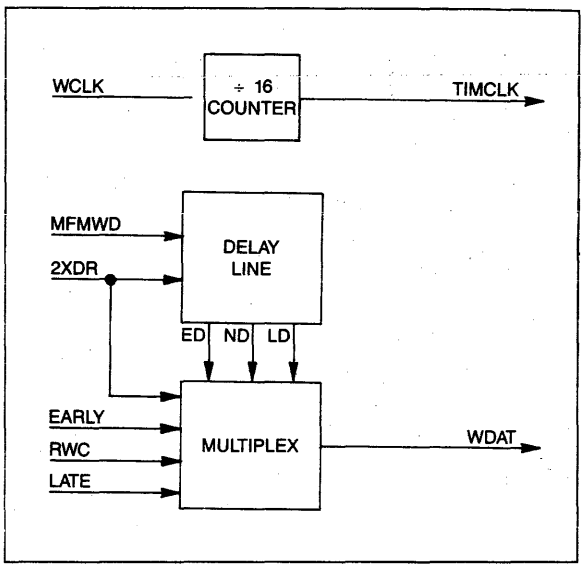

WD1012 BLOCK DIAGRAM

DESCRIPTION

The WD1012 Precompensation Logic Device has been designed to replace a complexity of logic circuitry as well as several TTL packages. By designing the Write Precomp delay line into the package, an additional chip is replaced reducing on-board space and design requirements, minimizing layout restrictions.

PROPOSED APPLICATIONS

The WD1012 is designed to be used with the WD1010 and WD1011 for Winchester disk control, as indicated below.

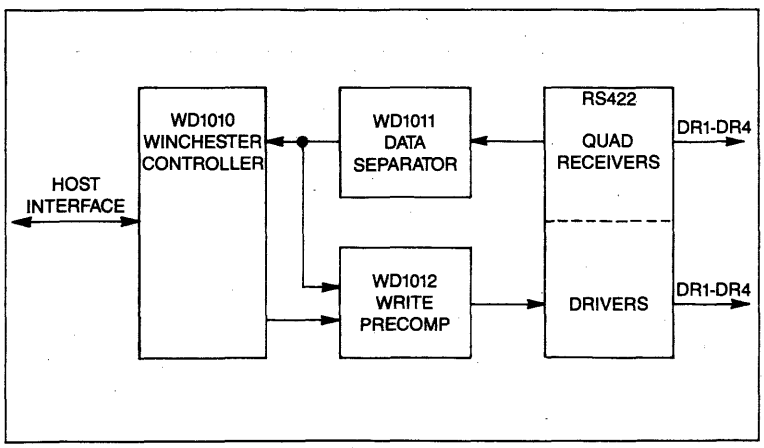

SIMPLIFIED SYSTEM DIAGRAM

June, 1983

2445 McCABE WAY
IRVINE, CALIFORNIA 92714

(714) 863-0102, TWX 910-595-1139

© IC MASTER 1984

NEW PRODUCT BULLETIN

Error Detection/Support Logic Device WD1014

FEATURES

- 32 BIT ECC POLYNOMINAL
- BURST CORRECTION TO 5 BITS
- MULTIPLE ERROR BURST DETECTION
- PROCESSES CHECK/SYNDROME BITS IN 2-BIT SERIAL FASHION
- DATA TRANSFER RATE OF 5 M BITS/SECOND
- SECTOR SIZES = 128, 256, 512, & 1024 BYTE DATA FIELDS
- SUPPORT READ/WRITE SHORT/LONG FEATURES
- 8-BIT I/O DATA BUS
- ON-CHIP STORAGE OF SYNDROME/CHECK BYTES
- SOFTWARE ADDRESSABLE REGISTERS & LATCHES
- TTL MOS COMPATABILITY
- ON-CHIP LOGIC FOR EXTERNAL BUFFER CONTROL
- 40-PIN, DUAL-IN-LINE, N-MOS DEVICE
- SINGLE SOURCE + 5 VDC SUPPLY

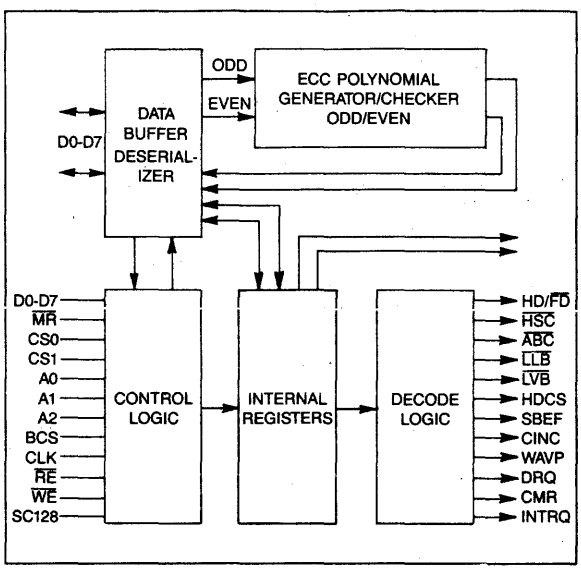

WD1014 BLOCK DIAGRAM

DESCRIPTION

The WD1014 EDS logic chip supports the WD1010 Winchester Disk Controller with ECC and support logic. The EDS chip is a single chip device specifically designed to add error correction capabilities to a 5.25" Winchester disk drive. It also contains three 8-bit registers, three counters, and several latches that enhance the capability of the Control Processor chip WD1015 for control functions in real time operation. The EDS 40-pin device replaces approximately 35 standard TTL packages consisting of shift registers, flip-flops and logic gates.

PROPOSED APPLICATIONS

The WD1015 may be used with several other Western Digital proprietary chips for Winchester and/or floppy disk controllers such as the WD1002-05 Winchester/Floppy Disk Controller board shown below.

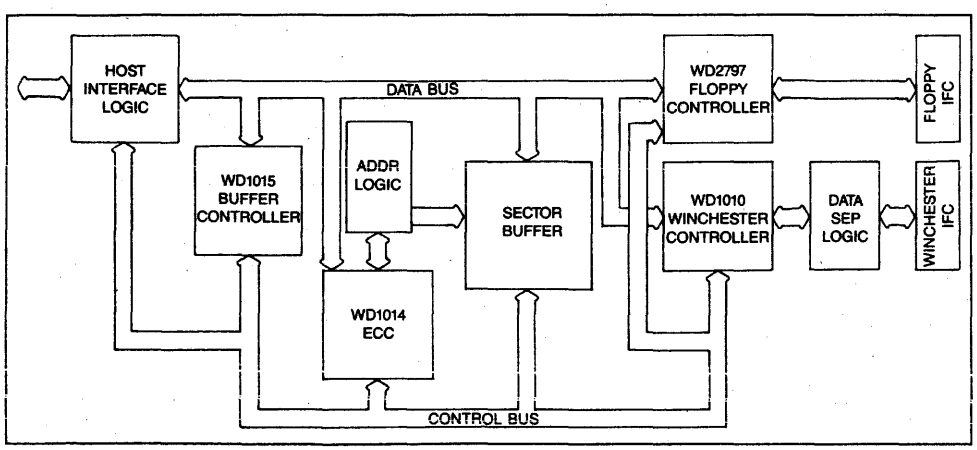

SIMPLIFIED SYSTEM DIAGRAM

July, 1983

2445 McCABE WAY
IRVINE, CALIFORNIA 92714

(714) 863-0102, TWX 910-595-1139

© IC MASTER 1984

WESTERN DIGITAL
CORPORATION

NEW PRODUCT BULLETIN

Buffer Manager Control Processor WD1015

FEATURES

- SINGLE +5V POWER SUPPLY
- COMPLETE BUFFER MANAGER
- PROGRAMMABLE SECTOR SIZES — 128, 256, 512, OR 1024 BYTES
- ECC BURST ERROR CORRECTION UP TO 5 BITS ON HARD DISK DATA
- 8 BIT MULTIPLEXED ADDRESS/DATA I/O BUS
- FLOPPY DISK COMMAND TRANSLATION
- SUPPORTS MOTOR ON OR HEAD LOAD DRIVES
- SUPPORTS 250 OR 500 KBS FLOPPIES
- BUFFERED SEEKS WITH FLOPPIES AND WINCHESTERS
- 16 POPULAR STEPPING RATES AVAILABLE
- AUTOMATIC RETRIES ON ALL ERRORS WITH SIMULATED COMPLETION
- POWER-ON DIAGNOSTICS INCLUDED
- 10 MHZ CLOCK RATE
- 40 PIN DIP PACKAGE

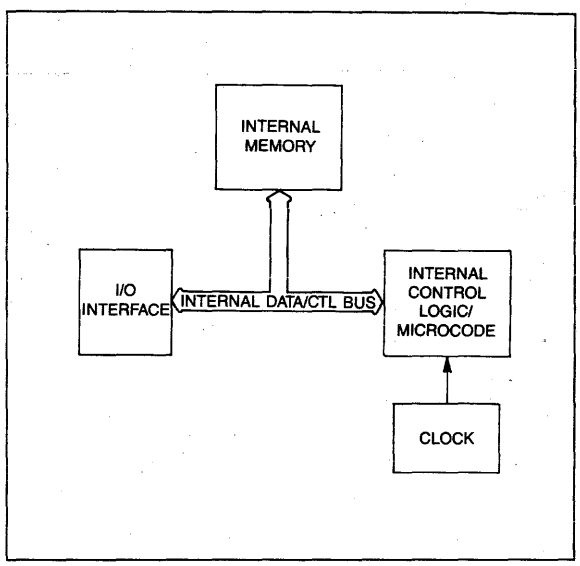

WD1015 BLOCK DIAGRAM

DESCRIPTION

The WD1015 is a complete Control Processor (CP) that is used to handle all aspects of buffer management, in conjuction with the EDS (WD1014) device, for the Winchester/Floppy Controller (WFC) board (WD1002-05). It executes all of the commands used by the WD1002-05 and does all of the control required except for real time processing, which is done by the WD1014. The WD1015 is programmed to control the transfer of information within the WFC and maintain the necessary copies of the task files for both drives.

PROPOSED APPLICATIONS

The WD1015 can be used as part of a proprietary chip set consisting of WD1010, WD1014, and WD2797 as in the WD1002-05 Winchester/Floppy Disk Controller board illustrated below;

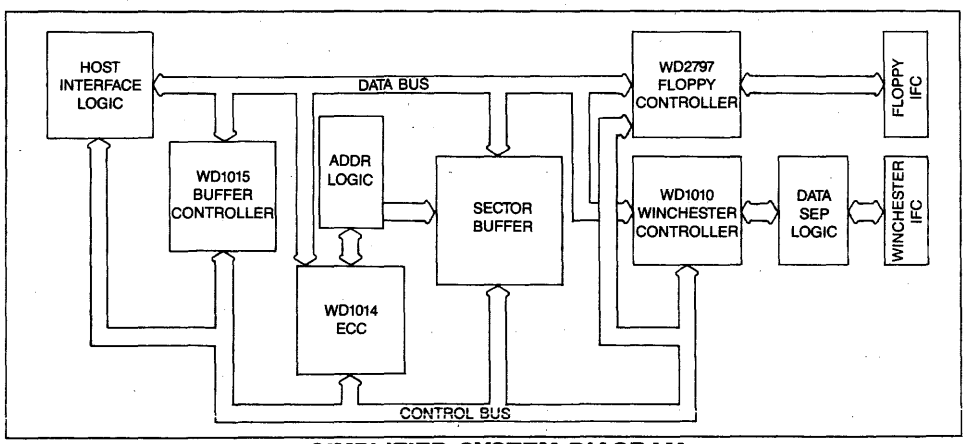

SIMPLIFIED SYSTEM DIAGRAM

July, 1983

2445 McCABE WAY
IRVINE, CALIFORNIA 92714

(714) 863-0102, TWX 910-595-1139

© IC MASTER 1984

NEW PRODUCT BULLETIN

Winchester Disk Controller/Formatter WD2010

FEATURES

- COMPATIBLE VIA 8-BIT DATA BUS WITH MOST MICROPROCESSORS
- UP TO 5 MBITS/S DATA RATE WITH SELECTED PARTS TO 10 MBITS
- MULTIPLE SECTOR READ/WRITE COMMANDS
- FORMATTING AND SECTOR INTERLEAVE CAPABILITY
- SEEK COMBINED WITH READ/WRITE COMMANDS
- SINGLE OR MULTIPLE SECTOR BUFFER USING FIFO OR RAM/COUNTER
- BUFFER ACCESS VIA PROGRAMMED I/O OR DMA
- 32 BIT ECC OR 16 BIT CRC SELECTABLE
- SELECTABLE 128, 256, 512, OR 1024 BYTE LENGTH SECTORS
- PROGRAMMABLE RETRY ALGORITHM
- SINGLE +5V SUPPLY

DESCRIPTION

The WD2010 Winchester Disk Controller is a single chip controller designed for use with the Shugart Associates SA1000 8″ Winchester disk drive or the Seagate Technology ST506 5.25″ Winchester disk drive. The WD2010 is designed to be software compatible with the WD1010. The WD2010 will read or write MFM data at a rate of up to 5 Mbits per second, with selected parts at a rate of up to 10 Mbits per second.

The WD2010 interfaces directly with TTL logic and is designed to operate with an external sector buffer memory, or with an external DMA controller. Data bytes are transferred to or from the buffer every 1.6 μsec. with a 5 Mbit per second drive. The buffer may consist of either a WD1510 128x9 FIFO memory, or a combination of a 256x8 static RAM and an 8-bit resettable counter. The WD2010 generates counter control signals to minimize external gating. Buffer to CPU transfers may be made via programmed I/O or DMA. The WD2010 also generates handshake signals to control DMA operation for multiple sector transfers.

A 32-bit ECC (Error Correction Code) polynomial or a 16-bit CRC polynomial may be selected.

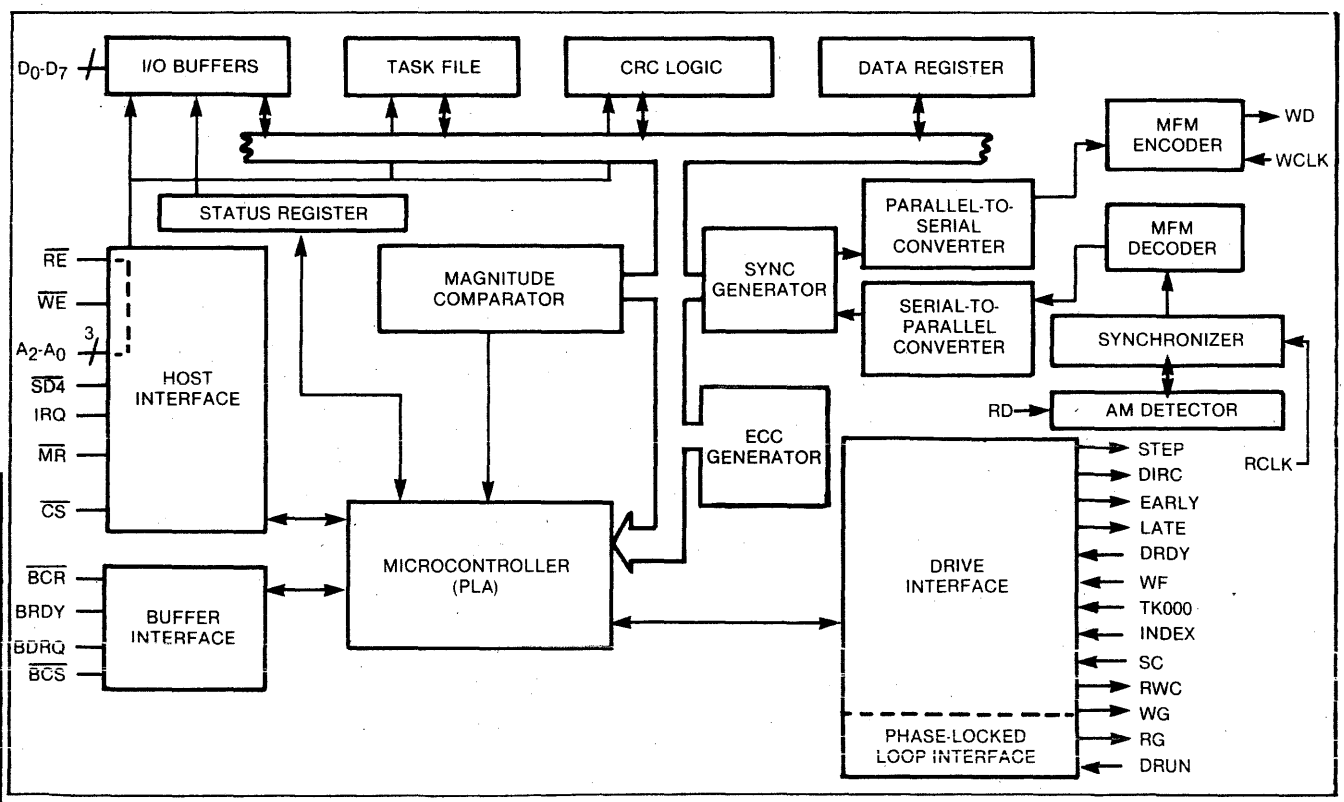

WD2010 BLOCK DIAGRAM

© IC MASTER 1984

PROPOSED APPLICATIONS

The WD2010 is designed for use in providing high speed Winchester Drive control.

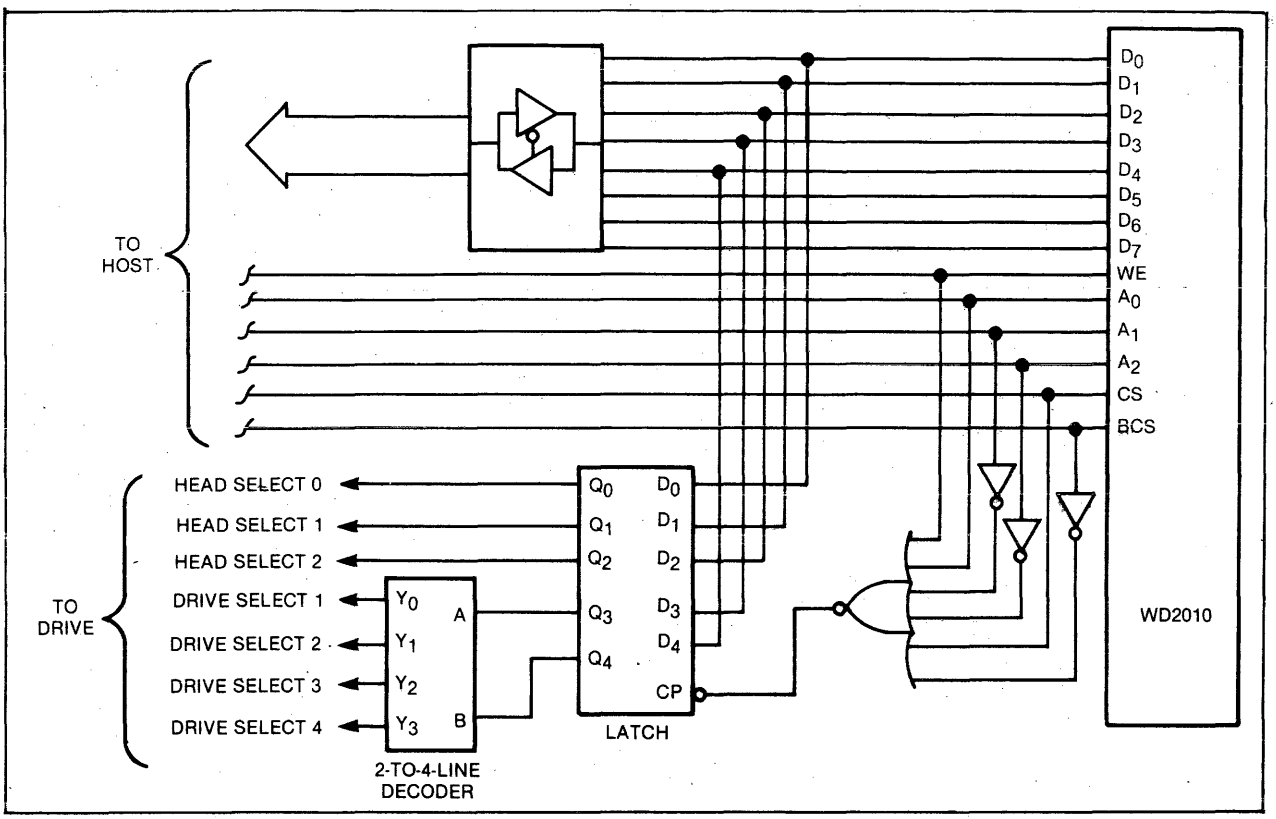

SIMPLIFIED SYSTEM DIAGRAM

WESTERN DIGITAL CORPORATION
2445 McCABE WAY
IRVINE, CALIFORNIA 92714
(714) 863-0102, TWX 910-595-1139

© IC MASTER 1984

NEW PRODUCT BULLETIN

SMD Controller/Formatter WD1050

FEATURES

- 16 BIT HOST INTERFACE
- 9.677 MBITS/SEC DATA RATE
- SINGLE/MULTIPLE SECTOR TRANSFERS
- FIXED SECTOR FORMAT
- TTL COMPATIBLE INPUT/OUTPUTS
- SINGLE 5V SUPPLY
- 68 PIN JEDEC TYPE C CHIP CARRIER PACKAGE
- COMPATIBLE WITH SMD, MMD, FHT, LMD, AND CMD FAMILIES
- SINGLE +5V SUPPLY

DESCRIPTION

The WD1050 SMD controller/formatter is an MOS/LSI device designed to interface an SMD compatible rigid disk drive to a host processor. The device is compatible with all rigid disk drives adhering to Control Data Corporation's flat cable interface for SMD, MMD, FHT, FMD, LMD and CMD families (CDC specification 64712400 Rev H). It is TTL compatible on all inputs and outputs, with interface capability for 8 or 16 bit data busses.

The WD1050 contains a powerful set of macro-commands for read/write and control functions. An internal 16 bit task file is used to process a selected command based upon parameter information in the file.

The WD1050 operates from a single +5V supply and is available in a 68 pin JEDEC chip-carrier package.

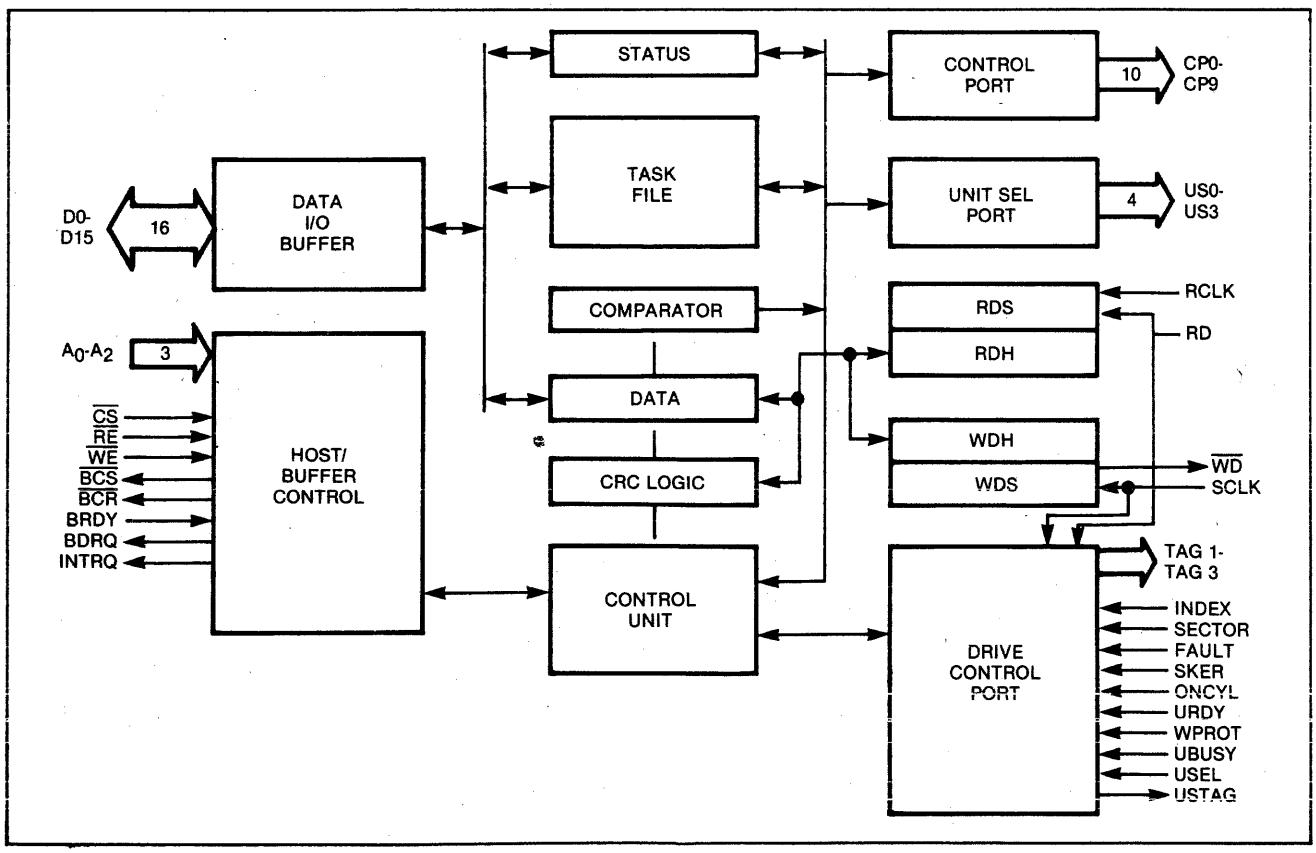

WD1050 FUNCTIONAL BLOCK DIAGRAM

© IC MASTER 1984

APPLICATIONS

The WD1050 is designed for use with the SMD family of disk drives. It interfaces easily with an 8 or 16 bit host processor and a buffer.

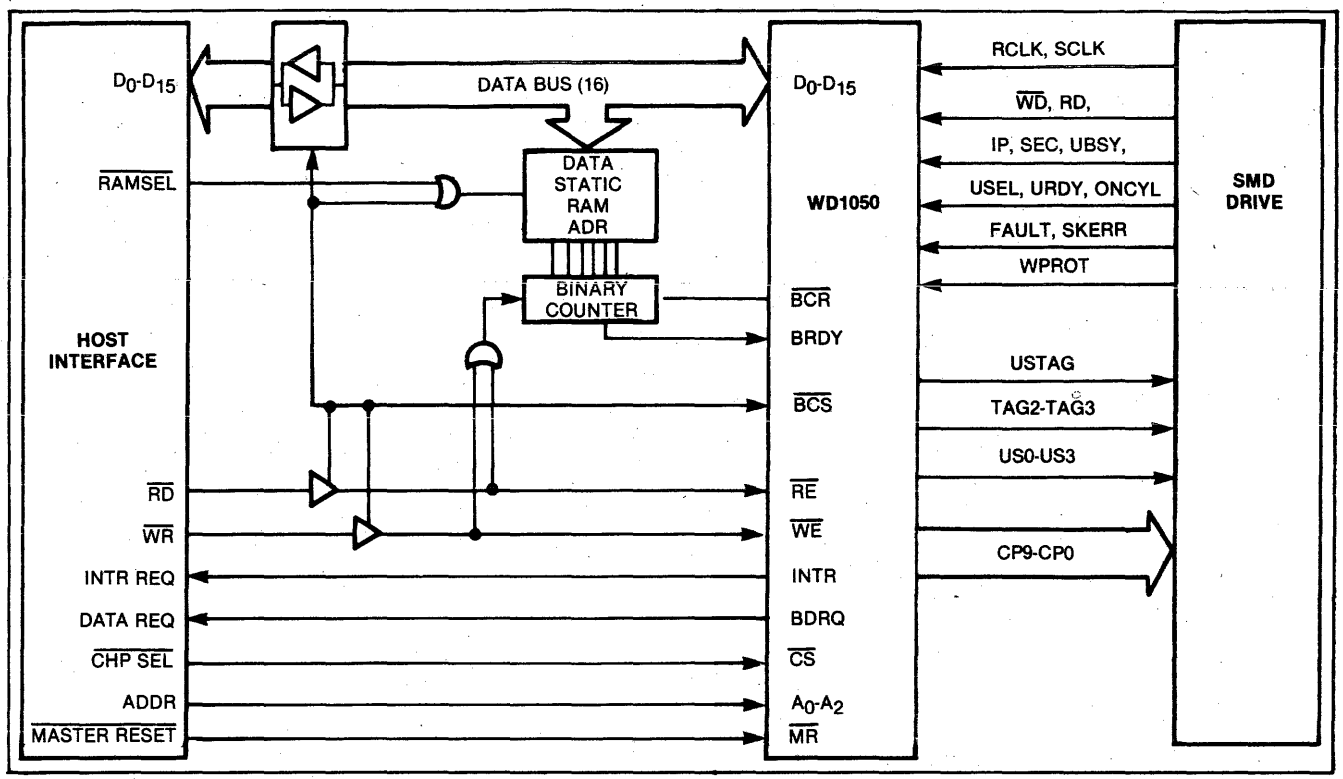

SIMPLIFIED SYSTEM DIAGRAM

Information furnished by Western Digital Corporation is believed to be accurate and reliable. However, no responsibility is assumed by Western Digital Corporation for its use; nor for any infringements of patents or other rights of third parties which may result from its use. No license is granted by implication or otherwise under any patent or patent rights of Western Digital Corporation. Western Digital Corporation reserves the right to change specifications at anytime without notice.

WESTERN DIGITAL CORPORATION
2445 McCABE WAY
IRVINE, CALIFORNIA 92714
(714) 863-0102, TWX 910-595-1139

© IC MASTER 1984

NEW PRODUCT BULLETIN

Buffer Manager Support Chip WD1100-11

FEATURES

- DRUN PULSE GENERATION
- RD PULSE GENERATION
- BUFFER MEMORY CONTROL
- HEAD SELECT GENERATION
- DRIVE SELECT GENERATION
- 40 PIN DUAL-IN-LINE PACKAGE
- SINGLE +5VDC SUPPLY

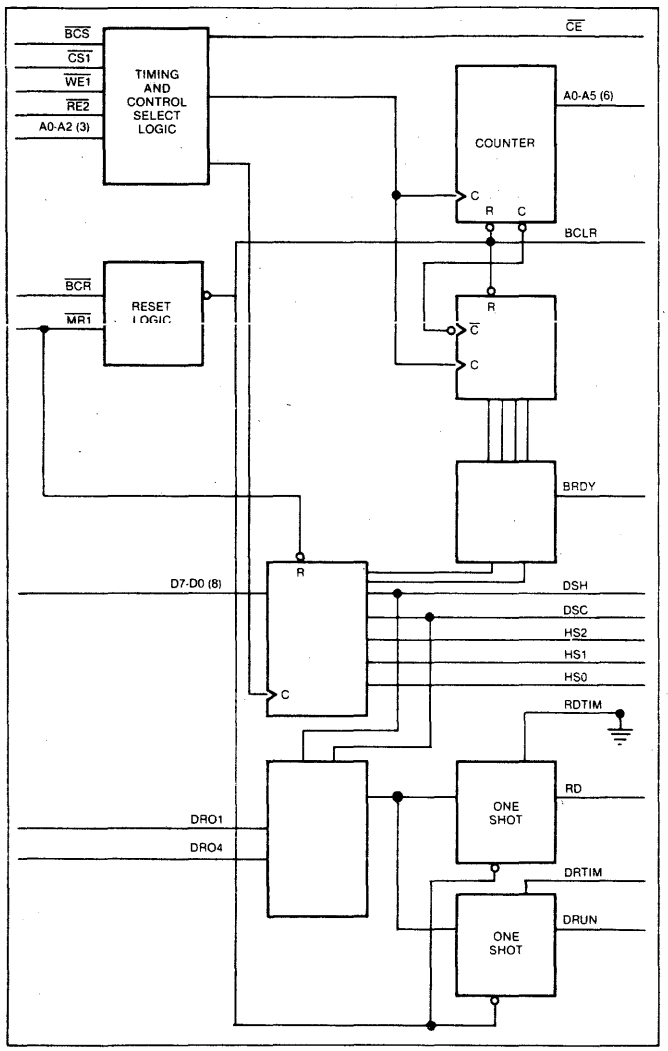

WD1100-11 BLOCK DIAGRAM

DESCRIPTION

The WD1100-11 Buffer Manager Support Chip controls the operation of the external buffer memory when used with the WD1010 Winchester Disk Controller. The WD1100-11 also provides a means for programming the Head Select and Drive Select by latching onto the SDH information when it is available on the Data Bus. The WD1100-11 also converts the serial data from the selected drive and shapes the Read Data and DRUN pulses appropriately for the WD1010.

The WD1100-11 is designed using NMOS technology and is manufactured in a 40 pin DIP package. The WD1100-11 requires only a single +5VDC supply.

© IC MASTER 1984

PROPOSED APPLICATIONS

The WD1100-11 is designed as a Buffer Manager support logic device to be used with the WD1010 Winchester Controller/Formatter as illustrated below.

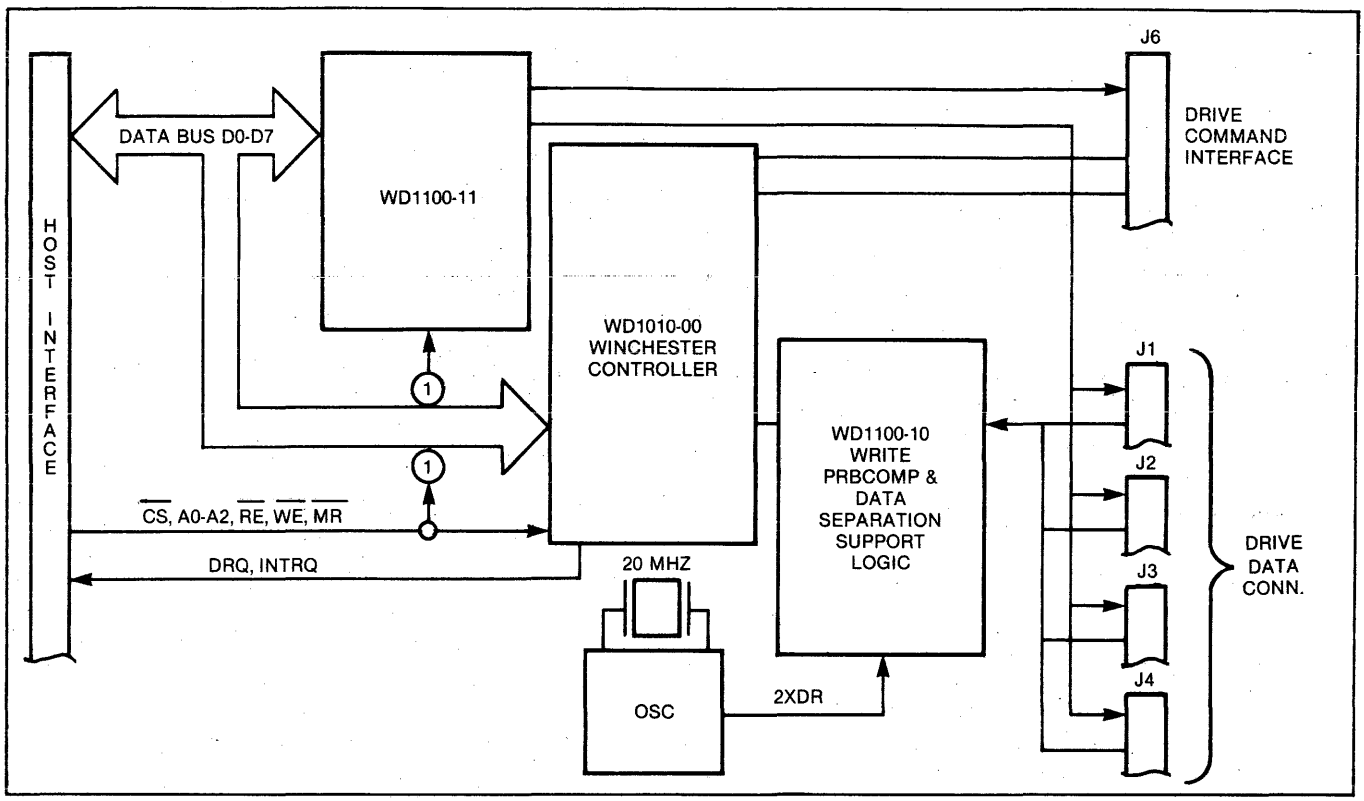

SIMPLIFIED SYSTEM DIAGRAM

WESTERN DIGITAL CORPORATION
2445 McCABE WAY
IRVINE, CALIFORNIA 92714
(714) 863-0102, TWX 910-595-1139

© IC MASTER 1984

NEW PRODUCT BULLETIN

ECC Logic Device WD1100-13

FEATURES

- 32 BIT COMPUTER SELECTED POLYNOMIAL
- MAXIMUM BURST DETECTION SPAN-11 BITS
- PARALLEL INPUT/OUTPUT
- DATA TRANSFER RATES UP TO 5 MBITS/SEC
- RECORD LENGTH UP TO 1038 BYTES INCLUDING CHECK BYTES
- TTL, MOS COMPATIBLE
- 20 PIN, NMOS TECHNOLOGY DIP PACKAGE
- SINGLE +5VDC SUPPLY

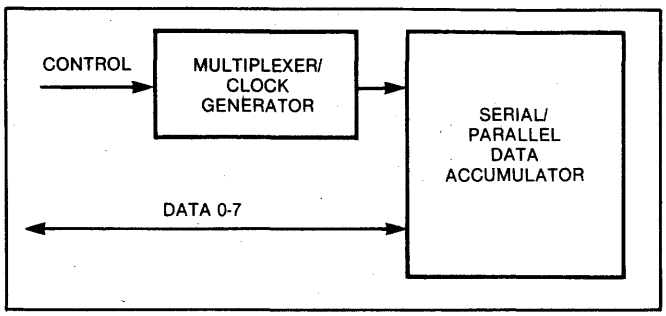

WD1100-13 BLOCK DIAGRAM

DESCRIPTION

The WD1100-13 is designed to provide ECC capabilities for Winchester Disk Controllers and will accommodate data transfer rates of up to 5 Mbits/sec. Data is transferred into and out of the WD1100-13 via an 8 bit bidirectional parallel data port.

The WD1100-13 performs several operations including, check byte generation, error detection, and error syndrome generation. Additionally, the WD1100-13 supports user diagnostics by allowing transparent check byte transfers between the host and disk medium.

The WD1100-13 uses NMOS technology and is provided in a 20 pin DIP package configuration. Only a single +5VDC supply is required.

PROPOSED APPLICATIONS

The WD1100-13 is designed for use with the Western Digital WD1010 Winchester Controller as well as other Western Digital proprietary devices for Winchester Drive control as illustrated in the WD1002-SHD board.

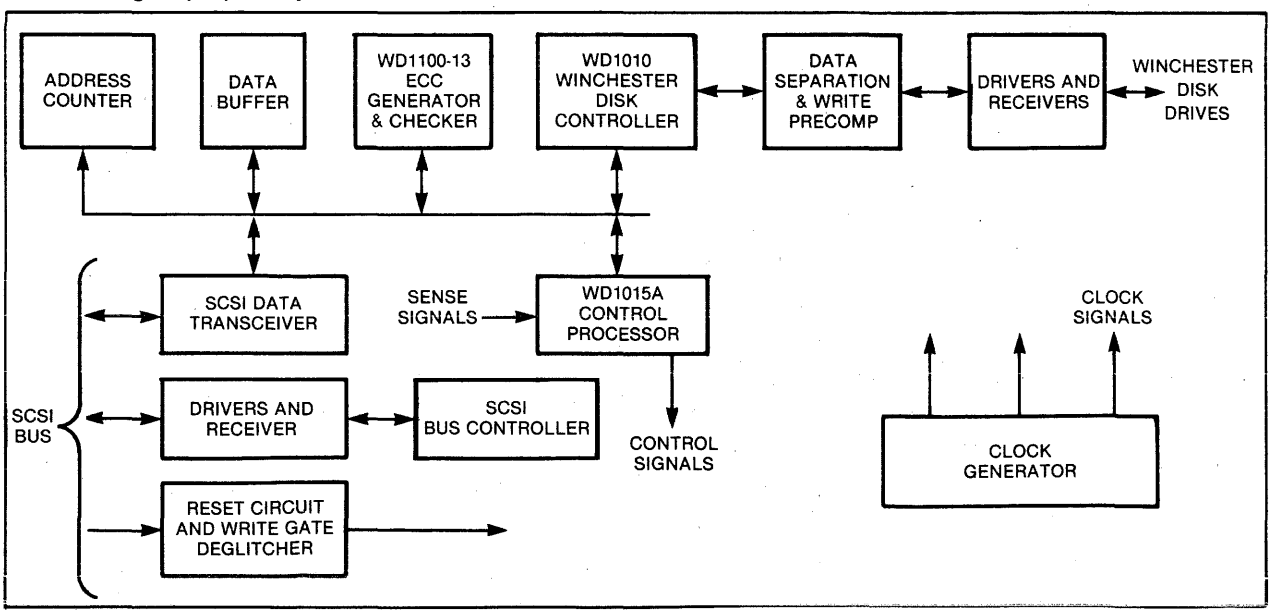

SIMPLIFIED SYSTEM DIAGRAM

2445 McCABE WAY
IRVINE, CALIFORNIA 92714
(714) 863-0102, TWX 910-595-1139

July, 1983

© IC MASTER 1984

NEW PRODUCT BULLETIN

FLOPPY Disk Controller/Formatter WD1770/72

FEATURES

- 28 PIN DIP
- SINGLE 5V SUPPLY
- BUILT-IN DATA SEPARATOR
- BUILT-IN WRITE PRECOMPENSATION
- 5¼" SINGLE AND DOUBLE DENSITY
- MOTOR CONTROL
- 128, 256, 512 OR 1024 SECTOR LENGTHS
- TTL COMPATIBLE
- 8 BIT BIDIRECTIONAL DATA BUS
- TWO VERSIONS AVAILABLE
  WD1770 = STANDARD 179X STEP RATES
  WD1772 = FASTER STEP RATES

DESCRIPTION

The WD1770 is a MOS/LSI device which performs the functions of a 5¼" Floppy Disk Controller/Formatter. It is similar to its predecessor, the WD179X, but also contains a digital data separator and write precompensation circuitry. The drive side of the interface needs no additional logic except for buffers/receivers. Designed for 5¼" single or double density operation, the device contains a programmable Motor On signal. The WD1770 is implemented in NMOS silicon gate technology and is available in a 28 pin dual-in-line. The WD1770 is a low cost version of the FD179X Floppy Disk Controller/Formatter.

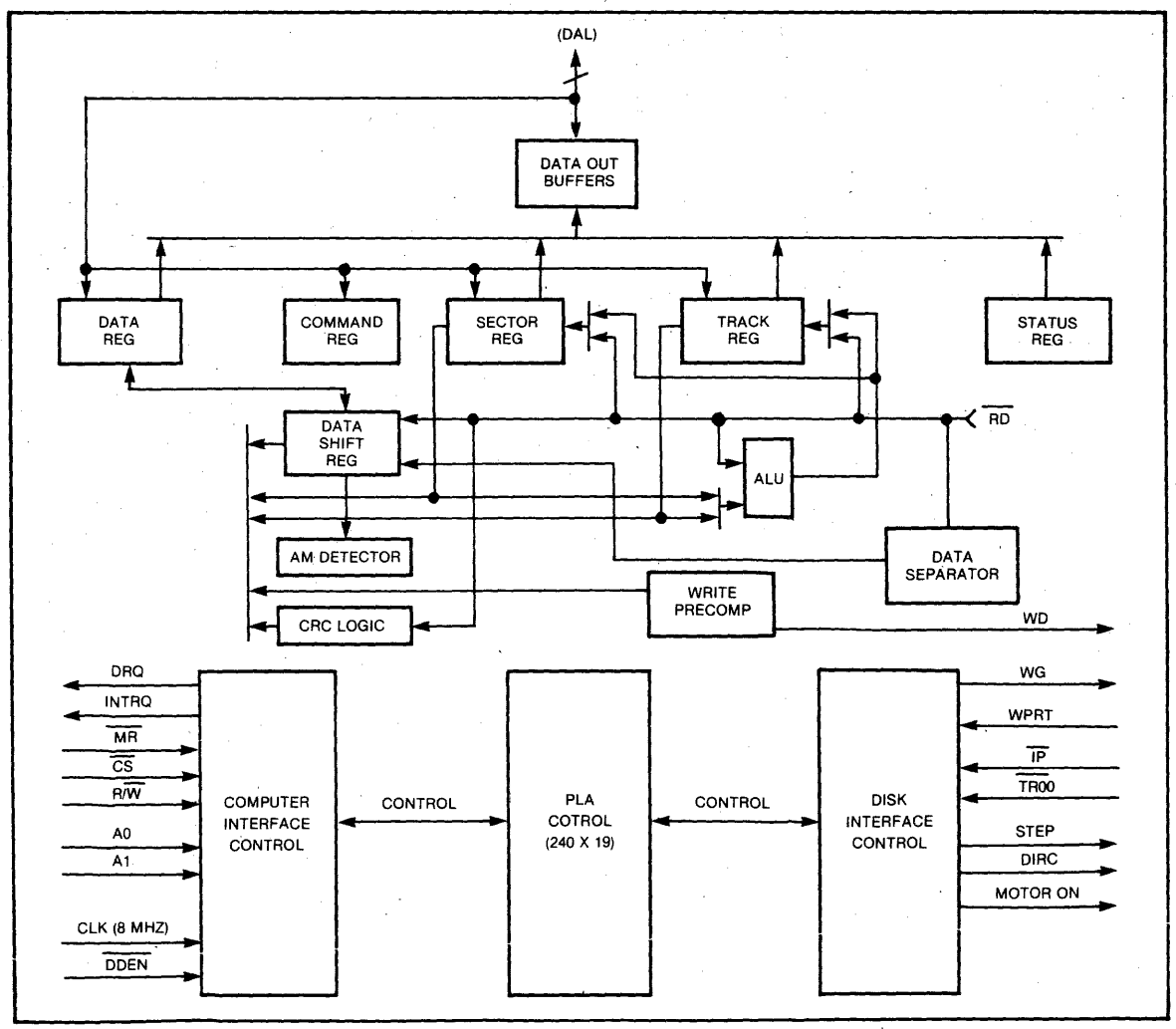

WD1770 BLOCK DIAGRAM

© IC MASTER 1984

PROPOSED APPLICATIONS

The mini-floppy controller is targeted for the low cost sector of the disk drive market, where digital data separation is preferred over analog phase lock loop. Included in this market are Personal Computers, Portable Computers and Small Business Computers. The WD1772 will be the same as the WD1770 except for increased stepping rates of 2, 3, 5 and 6ms.

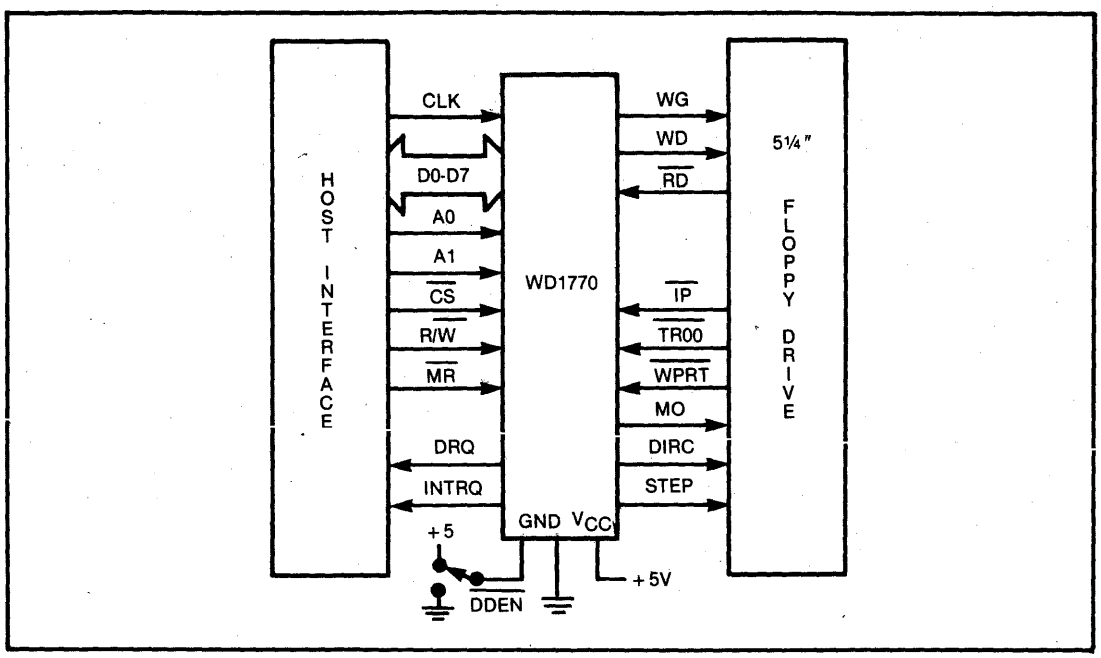

SIMPLIFIED SYSTEM DIAGRAM

WESTERN DIGITAL CORPORATION
2445 McCABE WAY
IRVINE, CALIFORNIA 92714
(714) 863-0102, TWX 910-595-1139

© IC MASTER 1984

WESTERN DIGITAL
CORPORATION

NEW PRODUCT BULLETIN

Floppy Disk Controller/Formatter WD1773

FEATURES

- 100% SOFTWARE COMPATIBILITY WITH WD1793
- BUILT-IN DATA SEPARATOR
- BUILT-IN WRITE PRECOMPENSATION
- SINGLE (FM) AND DOUBLE (MFM) DENSITY
- 28 PIN DIP, SINGLE +5V SUPPLY
- TTL COMPATIBLE INPUTS/OUTPUTS
- 128, 256, 512 OR 1024 SECTOR LENGTHS
- 8-BIT BI-DIRECTIONAL HOST INTERFACE

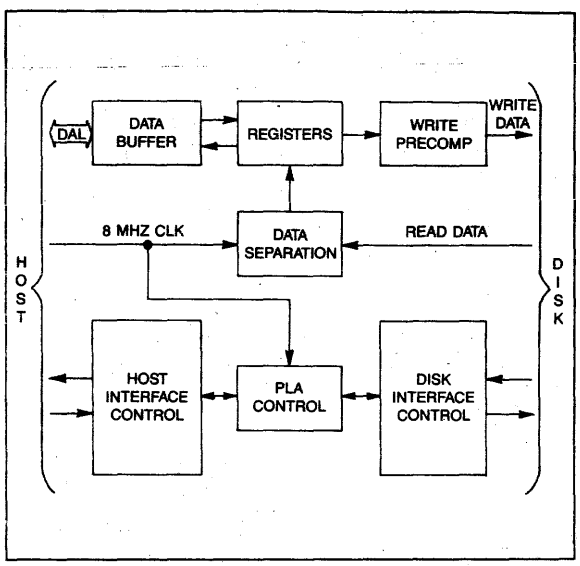

WD1773 BLOCK DIAGRAM

DESCRIPTION

The WD1773 is an MOS/LSI device which performs the functions of a 5¼" Floppy Disk Controller/Formatter. It is fully software compatible with the Western Digital WD1793-02, allowing the designer to reduce parts count and board size on an existing WD1793 based design without software modification.

With the exception of the enable Precomp/Ready line, the WD1773 is identical to the WD1770 controller. This line serves as both a READY input from the drive during READ/STEP operations, and as a Write Precompensation enable during Write operations. A built-in digital data separator eliminates all external components associated with data recovery in previous designs.

PROPOSED APPLICATIONS

A typical application for the WD1773 is illustrated below.

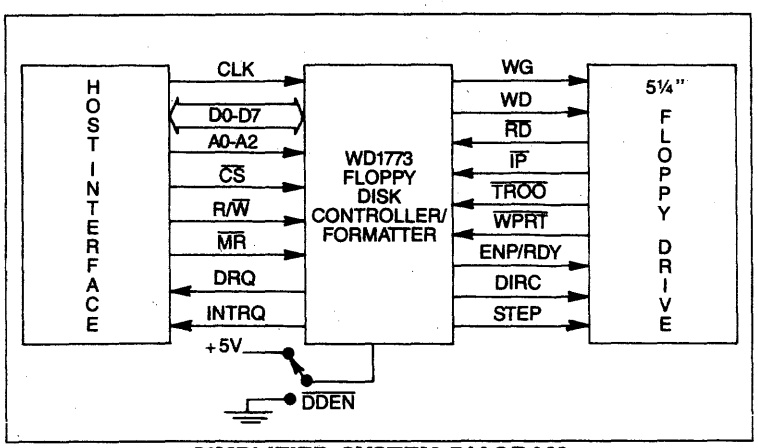

SIMPLIFIED SYSTEM DIAGRAM

June, 1983

2445 McCABE WAY
IRVINE, CALIFORNIA 92714
(714) 863-0102, TWX 910-595-1139

© IC MASTER 1984

Don't Miss the
IC Updates

These quarterly updates keep your IC Master current the year 'round.

Look for them in Integrated Circuits Magazine

Product Guide

Z80 Family **1738**
- Z8400 CPU 1738
- Z8410 DMA 1739
- Z8420 PIO 1739
- Z8430 CTC 1739
- Z8440 SIO 1740
- Z8470 DART 1740

For Zilog's complete Product Data Book contact Zilog, Inc., Components Publications, 1315 Dell Avenue, Campbell, CA 95008, Attn: Z80 IC Master.

Z8000 Family **1741**
- Z8001/2 CPU 1741
- Z8003/4 Z-VMPU 1742
- Z8010 Z-MMU 1743
- Z8015 Z-PMMU 1743
- Z8016 Z-DTC 1744
- Z8030 Z-SCC 1744
- Z8031 Z-ASCC 1745
- Z8036 Z-CIO 1745
- Z8038 Z-FIO 1746
- Z8060 FIFO 1746
- Z8065 Z-BEP 1747
- Z8068 Z-DCP 1747

For Zilog's complete Product Data Book contact Zilog, Inc., Components Publications, 1315 Dell Avenue, Campbell, CA 95008, Attn: Z8000 IC Master.

Z800 Family **1748**
- Z800 MPU 1748

For Zilog's complete Product Data Book contact Zilog, Inc., Components Publications, 1315 Dell Avenue, Campbell, CA 95008, Attn: Z800 IC Master.

Z80,000 Family **1749**
- Z80,000 CPU 1749
- Z8070 Z-APU 1750

For Zilog's complete Product Data Book contact Zilog, Inc., Components Publications, 1315 Dell Avenue, Campbell, CA 95008, Attn: Z80,000 IC Master.

Z8500 Peripherals **1751**
- Z8530 SCC 1751
- Z8531 ASCC 1751
- Z8536 CIO 1752
- Z8581 CGC 1752

For Zilog's complete Product Data Book contact Zilog, Inc., Components Publications, 1315 Dell Avenue, Campbell, CA 95008, Attn: Z8500 Peripherals IC Master.

Z8 Family **1753**
- Z8601/3/1L MCU 1753
- Z8611/12/13 MCU 1754
- Z8671 MCU 1754
- Z8681/2 MCU 1755
- Z8090/4, Z8590/4 UPCs 1755

For Zilog's complete Product Data Book contact Zilog, Inc., Components Publications, 1315 Dell Avenue, Campbell, CA 95008, Attn: Z8 IC Master.

Development Systems and Software **1756**
- Software Information 1756
- System 8000 1756
- EMS 8000 Emulator Subsystem 1757
- Z-SCAN 8000 Emulator 1757
- Z8000 Development Module 1758
- Z-SCAN 8 Emulator 1758
- Z8 Development Module 1759
- Z8 Software Development Package 1759

For Zilog's complete Product Data Book contact Zilog, Inc., Components Publications, 1315 Dell Avenue, Campbell, CA 95008, Attn: Development Systems and Software.

Hi-Reliability Microcircuits **1760**

For Zilog's complete Product Data Book contact Zilog, Inc., Components Publications, 1315 Dell Avenue, Campbell, CA 95008, Attn: Hi-Rel IC Master.

Z8400
Z80® CPU Central Processing Unit

Zilog

FEATURES

- The instruction set contains 158 instructions. The 78 instructions of the 8080A are included as a subset; 8080A software compatibility is maintained.
- Eight MHz, 6 MHz, 4 MHz and 2.5 MHz clocks for the Z80H, Z80B, Z80A, and Z80 CPU result in rapid instruction execution with consequent high data throughput.
- The extensive instruction set includes string, bit, byte, and word operations. Block searches and block transfers together with indexed and relative addressing result in the most powerful data handling capabilities in the microcomputer industry.
- The Z80 microprocessors and associated family of peripheral controllers are linked by a vectored interrupt system. This system can be daisy-chained to allow implementation of a priority interrupt scheme. Little, if any, additional logic is required for daisy-chaining.
- Duplicate sets of both general-purpose and flag registers are provided, easing the design and operation of system software through single-context switching, background-foreground programming, and single-level interrupt processing. In addition, two 16-bit index registers facilitate program processing of tables and arrays.
- There are three modes of high speed interrupt processing: 8080 compatible, non-Z80 peripheral device, and Z80 Family peripheral with or without daisy chain.
- On-chip dynamic memory refresh counter.
- Available in a low power version, the Z8300 Z80L, which combines the high performance of the Z80 CPU with extremely low power consumption.

The Z80, Z80A, Z80B, and Z80H CPUs are third-generation single-chip microprocessors with exceptional computational power. They offer higher system throughput and more efficient memory utilization than comparable second- and third-generation microprocessors. The internal registers contain 208 bits of read/write memory that are accessible to the programmer. These registers include two sets of six general-purpose registers which may be used individually as either 8-bit registers or as 16-bit register pairs. In addition, there are two sets of accumulator and flag registers. A group of "Exchange" instructions makes either set of main or alternate registers accessible to the programmer. The alternate set allows operation in foreground-background mode or it may be reserved for very fast interrupt response.

The Z80 also contains a Stack Pointer, Program Counter, two index registers, a Refresh register (counter), and an interrupt register. The CPU is easy to incorporate into a system since it requires only a single +5 V power source. All output signals are fully decoded and timed to control standard memory or peripheral circuits, and it is supported by an extensive family of peripheral controllers.

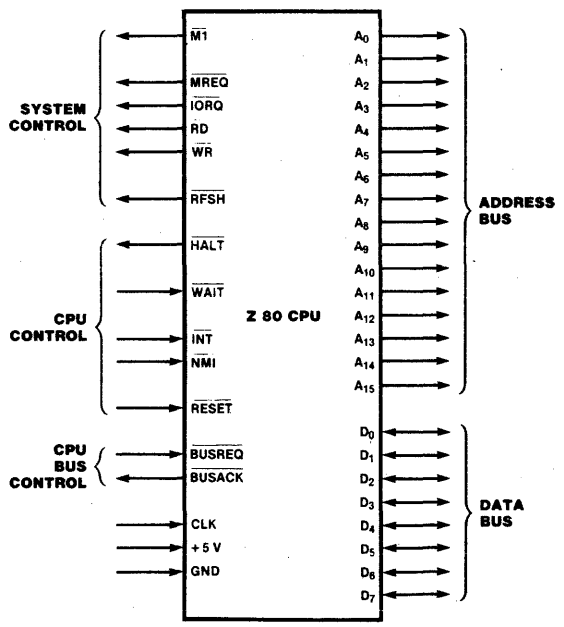

Pin Functions

© IC MASTER 1984

Z8410
Z80® DMA Direct Memory Access Controller

Zilog

FEATURES

- Transfers, searches and search/transfers in Byte-at-a-Time, Burst or Continuous modes. Cycle length and edge timing can be programmed to match the speed of any port.
- Dual port addresses (source and destination) generated for memory-to-I/O, memory-to-memory, or I/O-to-I/O operations. Addresses may be fixed or automatically incremented/decremented.
- Next-operation loading without disturbing current operations via buffered starting-address registers. An entire previous sequence can be repeated automatically.
- Extensive programmability of functions. CPU can read complete channel status.
- Standard Z80 Family bus-request and prioritized interrupt-request daisy chains implemented without external logic. Sophisticated, internally modifiable interrupt vectoring.
- Direct interfacing to system buses without external logic.

The Z80 DMA (Direct Memory Access) is a powerful and versatile device for controlling and processing transfers of data. Its basic function of managing CPU-independent transfers between two ports is augmented by an array of features that optimize transfer speed and control with little or no external logic in systems using an 8- or 16-bit data bus and a 16-bit address bus.

Z8420
Z80® PIO Parallel Input/Output Controller

FEATURES

- Provides a direct interface between Z80 microcomputer systems and peripheral devices.
- Both ports have interrupt-driven handshake for fast response.
- Four programmable operating modes: byte input, byte output, byte input/output (Port A only), and bit input/output.
- Programmable interrupts on peripheral status conditions.
- Standard Z80 Family bus-request and prioritized interrupt-request daisy chains implemented without external logic.
- The eight Port B outputs can drive Darlington transistors (1.5 mA at 1.5 V).
- Available in a low power version, the Z8320 low power Z80L PIO.

The Z80 PIO Parallel I/O Circuit is a programmable, dual-port device that provides a TTL-compatible interface between peripheral devices and the Z80 CPU. The CPU configures the Z80 PIO to interface with a wide range of peripheral devices with no other external logic. Typical peripheral devices that are compatible with the Z80 PIO include most keyboards, paper tape readers and punches, printers, PROM programmers, etc.

Z8430
Z80® CTC Counter/ Timer Circuit

FEATURES

- Four independently programmable counter/timer channels, each with a readable downcounter and a selectable 16 or 256 prescaler. Downcounters are reloaded automatically at zero count.
- Selectable positive or negative trigger initiates timer operation.
- Three channels have Zero Count/Timeout outputs capable of driving Darlington transistors.

- Interfaces directly to the Z80 CPU or—for baud rate generation—to the Z80 SIO.
- Standard Z80 Family daisy-chain interrupt structure provides fully vectored, prioritized interrupts without external logic. The CTC may also be used as an interrupt controller.
- Available in a low power version, the Z8330 low power Z80L CTC.

The Z80 CTC four-channel counter/timer can be programmed by system software for a broad range of counting and timing applications. The four independently programmable channels of the Z80 CTC satisfy common microcomputer system requirements for event counting, interrupt and interval timing, and general clock rate generation.

Z8440 Z80® SIO Serial Input/Output Controller

FEATURES

- Two independent full-duplex channels, with separate control and status lines for modems or other devices.
- Data rates of 0 to 500K bits/second in the x1 clock mode with a 2.5 MHz clock (Z80 SIO), or 0 to 800K bits/second with a 4.0 MHz clock (Z80A SIO).
- Receiver data registers quadruply buffered, transmitter registers doubly buffered.
- Asynchronous protocols: everything necessary for complete messages in 5, 6, 7 or 8 bits/character. Includes variable stop bits and several clock-rate multipliers; break generation and detection; parity; overrun and framing error detection.
- Synchronous protocols: everything necessary for complete bit- or byte-oriented messages in 5, 6, 7 or 8 bits/character, including IBM Bisync, SDLC, HDLC, CCITT-X.25 and others. Automatic CRC generation/checking, sync character and zero insertion/deletion, abort generation/detection and flag insertion.
- Highly sophisticated and flexible daisy-chain interrupt vectoring for interrupts without external logic.
- Available in a low power version, the Z8340 low power Z80L SIO.

The Z80 SIO Serial Input/Output Controller is a dual-channel data communication interface with extraordinary versatility and capability. Its basic functions as a serial-to-parallel, parallel-to-serial converter/controller can be programmed by a CPU for a broad range of serial communication applications.

Z8470 Z80® DART Dual Asynchronous Receiver/Transmitter

FEATURES

- Two independent full-duplex channels with separate modem controls. Modem status can be monitored.
- In x1 clock mode, data rates are 0 to 500K bits/second with a 2.5 MHz clock, or 0 to 800K bits/second with a 4.0 MHz clock.
- Receiver data registers are quadruply buffered; the transmitter is doubly buffered.
- Programmable options include 1, 1½ or 2 stop bits; even, odd or no parity; and x1, x16, x32 and x64 clock modes.
- Break generation and detection as well as parity-, overrun- and framing-error detection are available.
- Interrupt features include a programmable interrupt vector, a "status affects vector" mode for fast interrupt processing, and the standard Z80 peripheral daisy-chain interrupt structure that provides automatic interrupt vectoring with no external logic.
- On-chip logic for ring indication and carrier-detect status.

The Z80 DART (Dual-Channel Asynchronous Receiver/Transmitter) is a dual-channel multi-function peripheral component that satisfies a wide variety of asynchronous serial data communications requirements in microcomputer systems. The Z80 DART is used as a serial-to-parallel, parallel-to-serial converter/controller in asynchronous applications. In addition, the device also provides modem controls for both channels. In applications where modem controls are not needed, these lines can be used for general-purpose I/O.

© IC MASTER 1984

Z8001/2 Z8000™ CPU Central Processing Unit

Zilog

FEATURES

- Regular, easy-to-use architecture
- Instruction set more powerful than many minicomputers
- Directly addresses 8M bytes
- Eight user-selectable addressing modes
- Seven data types that range from bits to 32-bit long words and byte and word strings
- System and normal operating modes
- Separate code, data and stack spaces
- Sophisticated interrupt structure
- Resource-sharing capabilities for multi-processing systems
- Multi-programming support
- Compiler support
- Memory management and protection provided by Z8010 Memory Management Unit
- 32-bit operations, including signed multiply and divide
- Z-BUS compatible
- 4, 6 and 10 MHz clock rate

The Z8000 is an advanced high-end 16-bit microprocessor that spans a wide variety of applications ranging from simple stand-alone computers to complex parallel-processing systems. Essentially a monolithic minicomputer central processing unit, the Z8000 CPU is characterized by an instruction set more powerful than many minicomputers; abundant resources in registers, data types, addressing modes and addressing range; and a regular architecture that enhances throughput by avoiding critical bottlenecks such as implied or dedicated registers.

CPU resources include sixteen 16-bit general-purpose registers, seven data types that range from bits to 32-bit long words and byte and word strings, and eight user-selectable addressing modes. The 110 distinct instruction types can be combined with the various data types and addressing modes to form a powerful set of 414 instructions. Moreover, the instruction set exhibits a high degree of regularity: most instructions can use any of the five main addressing modes and can operate on byte, word, and long-word data types.

The CPU can operate in either the system or normal modes. The distinction between these two modes permits privileged operations, thereby improving operating system organization and implementation. Multiprogramming is supported by the "atomic" Test and Set instruction; multiprocessing by a combination of instruction and hardware features; and compilers by multiple stacks, special instructions and addressing modes.

The Z8000 CPU is offered in two versions: the Z8001 48-pin segmented CPU and the Z8002 40-pin nonsegmented CPU. The main difference between the two is in addressing range. The Z8001 can directly address 8 megabytes of memory; the Z8002 directly addresses 64 kilobytes. The two operating modes—system and normal—and the distinction between code, data and stack spaces within each mode allows memory extension up to 48 megabytes for the Z8001 and 384 kilobytes for the Z8002.

To meet the requirements of complex, memory-intensive applications, a companion memory-management device is offered for the Z8001. The Z8010 Memory Management Unit manages the large address space by providing features such as segment relocation and memory protection. The Z8001 can be used with or without the Z8010. If used by itself, the Z8001 still provides an 8 megabyte direct addressing range, extendable to 48 megabytes.

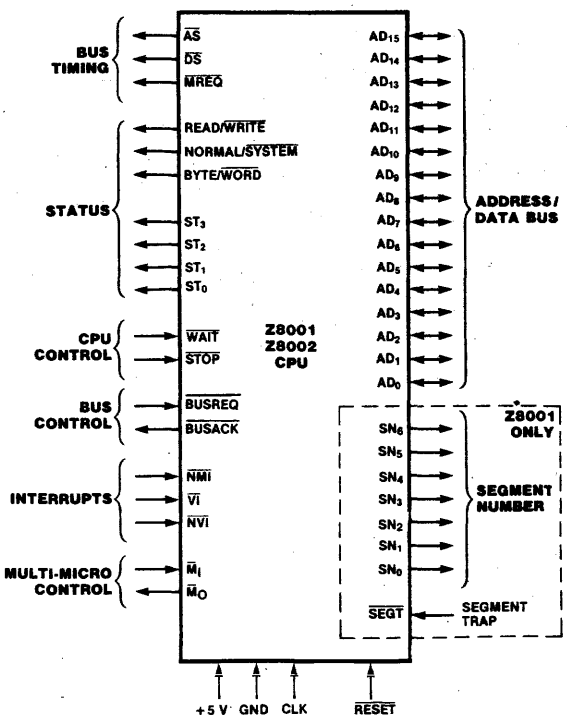

Z8000 CPU Pin Functions

© IC MASTER 1984

Z8003/4 Z8000™ Z-VMPU Virtual Memory Processing Unit

Zilog

FEATURES

- Regular, easy-to-use architecture.
- Instruction set more powerful than many minicomputers.
- Direct addressing capability of up to 8M bytes in each address space.
- Supports implementation of virtual memory systems.
- Eight user-selected addressing modes.
- Wide range of data types including bits, bytes, words, 32-bit long words, and byte and word strings.
- Binary-compatible with Z8001/2 CPUs.
- Separate System and Normal operating modes.
- Sophisticated interrupt structure.
- Resource-sharing capabilities for multiprocessing systems.
- Multi-programming support.
- 32-bit operations, including signed multiply and divide.
- Z-BUS™ compatible.
- Multiple clock rates: 4, 8, or 10 MHz.

The Virtual Memory Microprocessor Units (Z8003 and Z8004 Z-VMPUs) accommodate applications that range from the simplest to the most complex.

The Z8003 Z-VMPU uses both segmented and nonsegmented address spaces. It also provides facilities for the implementation of demand segment swapping or a demand paged virtual memory system.

The Z8004 Z-VMPU uses only nonsegmented address spaces. It also provides facilities for the implementation of a demand paged virtual memory system.

Both Z-VMPUs interface with the entire Z8000 Family of support components. Used alone or with Z8000 Family components, the advanced architecture of these LSI Z-VMPUs permits the implementation of systems that have the flexibility and the sophisticated features usually associated with minicomputers or mainframe computers.

The Z8003/4 microprocessors are binary compatible with other Z8000 Family microprocessors. The features that distinguish these microprocessors from the Z8001 and Z8002 microprocessors are the abort capability and the Test and Set status.

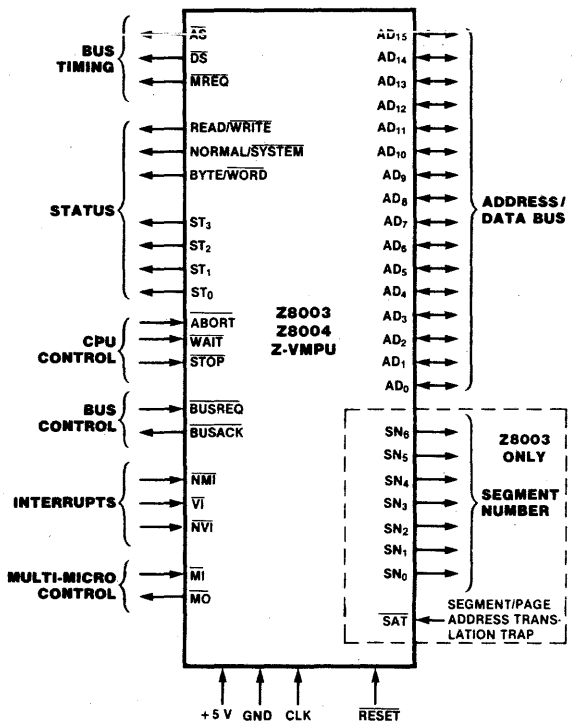

Pin Assignments

© IC MASTER 1984

Z8010 Z8000™ Z-MMU Memory Management Unit

Zilog

FEATURES

- Dynamic segment relocation makes software addresses independent of physical memory addresses.
- Sophisticated memory-management features include access validation that protects memory areas from unauthorized or unintentional access, and a write-warning indicator that predicts stack overflow.
- 64 variable-sized segments from 256 to 65,536 bytes can be mapped into a total physical address space of 16M bytes; all 64 segments are randomly accessible.
- For use with both Z8001 and Z8003 CPU.
- Multiple Z-MMUs can support several translation tables for each Z8001/3 address space.
- Z-MMU architecture supports multi-programming systems and virtual memory implementations.

The Z8010 Memory Management Unit (Z-MMU) manages the large 8M byte addressing spaces of the Z8001 CPU. The Z-MMU provides dynamic segment relocation as well as numerous memory protection features.

Dynamic segment relocation makes user software addresses independent of the physical memory addresses, thereby freeing the user from specifying where information is actually located in the physical memory. It also provides a flexible, efficient method for supporting multiprogramming systems. The Z-MMU uses a translation table to transform the 23-bit logical address output from the Z8001 CPU into a 24-bit address for the physical memory. (Only logical memory addresses go to a Z-MMU for translation; I/O addresses and data, in general, must bypass this component.)

Z8015 Z8000™ Z-PMMU Paged Memory Management Unit

FEATURES

- Z-PMMU architecture supports multiprogramming systems and virtual memory implementations.
- Dynamic page relocation makes software addresses independent of physical memory addresses.
- Sophisticated memory management features include access validation that protects memory areas from unauthorized or unintentional access, and a write-warning indicator that predicts stack overflow.
- 64 pages, each 2048 bytes in length, can be mapped into a total physical address space of 16 megabytes; all 64 pages are randomly accessible.
- Pages larger or smaller than 2048 bytes can be easily implemented.
- The number of accessible pages can be increased by using multiple Z-PMMUs.

The Z8015 Paged Memory Management Unit (Z-PMMU), a new member of Zilog's Z8000 Family, is designed to support a paged virtual memory system for the Z8003 Virtual Memory Processor Unit (Z-VMPU). Although designed primarily for the Z8003, the Z-PMMU can also be used to support other CPUs in the Z8000 Family. The sophisticated memory management features of the Z-PMMU include access validation for memory protection, a write-warning that gives advance warning of possible stack overflow, and the generation of instruction aborts for accesses to pages not in main memory. Each Z-PMMU can manage a basic memory area of sixty-four 2048-byte, fixed-size pages. The Z-VMPU's 8M byte logical address space is translated by the Z-PMMU into a 16M byte physical address space. Page size can be easily changed and multiple PMMUs can be combined to support more pages.

© IC MASTER 1984

Z8016 Z8000™ Z-DTC Direct Memory Access Transfer Controller

Zilog

FEATURES

- Memory-to-peripheral transfer up to 2.66M bytes/second at 4 MHz.
- Memory-to-memory transfers up to 1.33M bytes/second at 4 MHz.
- Two fully independent, multi-function channels.
- Masked data pattern matching for search and transfer-and-search operations.
- Funneling option permits mixing of byte and word data during transfer operations.
- Can operate in logical address space with Zilog Memory Management Units, providing an 8M byte logical addressing range and 16M byte physical addressing range.
- Programmable chaining operation provides automatic loading of control parameters from memory into each channel.
- Software- or hardware-controlled wait state insertion.
- Z-BUS daisy-chain interrupt hierarchy and bus-request structure.

The Z8016 DMA Transfer Controller (Z-DTC) is a high-performance data transfer device designed to match the power and addressing capability of the Z8000 CPUs. In addition to providing block data transfer capability between memory and peripherals, each of the two DTC channels can perform peripheral-to-peripheral and memory-to-memory transfers.

Z8030 Z8000™ Z-SCC Serial Communications Controller

FEATURES

- Two independent, 0 to 1M bit/second, full-duplex channels, each with a separate crystal oscillator, baud rate generator, and Digital Phase-Locked Loop for clock recovery.
- Multi-protocol operation under program control; programmable for NRZ, NRZI, or FM data encoding.
- Asynchronous mode with five to eight bits and one, one and one-half, or two stop bits per character; programmable clock factor; break detection and generation; parity, overrun, and framing error detection.
- Synchronous mode with internal or external character synchronization on one or two sync characters and CRC generation and checking with CRC-16 or CRC-CCITT preset to either 1s or 0s.
- SDLC/HDLC mode with comprehensive frame-level control, automatic zero insertion and deletion, I-field residue handling, abort generation and detection, CRC generation and checking, and SDLC Loop mode operation.
- Local Loopback and Auto Echo modes.

The Z8030 Z-SCC Serial Communications Controller is a dual-channel, multi-protocol data communications peripheral designed for use with the Zilog Z-BUS. The Z-SCC functions as a serial-to-parallel, parallel-to-serial converter/controller. The Z-SCC can be software-configured to satisfy a wide variety of serial communications applications. The device contains a variety of new, sophisticated internal functions including on-chip baud rate generators, Digital Phase-Locked Loops, and crystal oscillators that dramatically reduce the need for external logic.

© IC MASTER 1984

Z8031 Z8000™ Z-ASCC Asynchronous Serial Communications Controller

Zilog

FEATURES

- Two independent, 0 to 1M bit/second, full-duplex channels, each with a separate crystal oscillator and baud rate generator.
- Programmable for NRZ, NRZI, or FM data encoding.
- Asynchronous communications with five to eight bits per character and one, one and one-half, or two stop bits per character; programmable clock factor; break detection and generation; parity, overrun, and framing error detection.
- Local Loopback and Auto Echo modes.

The Z8031 Z-ASCC Asynchronous Serial Communications Controller is a dual-channel data communications peripheral designed for use with the Zilog Z-BUS. The Z-ASCC functions as a serial-to-parallel, parallel-to-serial converter/controller. The device contains a variety of new, sophisticated internal functions including on-chip baud rate generators and crystal oscillators that dramatically reduce the need for external logic.

Z8036 Z8000™ Z-CIO Counter/Timer and Parallel I/O Unit

FEATURES

- Two independent 8-bit, double-buffered, bidirectional I/O ports plus a 4-bit special-purpose I/O port. I/O ports feature programmable polarity, programmable direction (Bit mode), "pulse catchers," and programmable open-drain outputs.
- Four handshake modes, including 3-Wire (like the IEEE-488).
- REQUEST/$\overline{\text{WAIT}}$ signal for high-speed data transfer.
- Flexible pattern-recognition logic, programmable as a 16-vector priority interrupt controller.
- Three independent 16-bit counter/timers with up to four external access lines per counter/timer (count input, output, gate, and trigger), and three output duty cycles (pulsed, one-shot, and square-wave), programmable as retriggerable or nonretriggerable.
- Easy to use since all registers are read/write and directly addressable.

The Z8036 Z-CIO Counter/Timer and Parallel I/O element is a general-purpose peripheral circuit, satisfying most counter/timer and parallel I/O needs encountered in system designs. This versatile device contains three I/O ports and three counter/timers. Many programmable options tailor its configuration to specific applications. The use of the device is simplified by making all internal registers (command, status, and data) readable and (except for status bits) writable. In addition, each register is given its own unique address so that it can be accessed directly—no special sequential operations are required. The Z-CIO is directly Z-BUS compatible.

© IC MASTER 1984

Z8038 Z8000™ Z-FIO FIFO Input/ Output Interface Unit

Zilog

FEATURES

- 128-byte FIFO buffer provides asynchronous bidirectional CPU/CPU or CPU/peripheral interface, expandable to any width in byte increments by use of multiple FIOs.
- Interlocked 2-wire or 3-wire handshake logic port mode; Z-BUS or non-Z-BUS interface.
- Pattern-recognition logic stops DMA transfers and/or interrupts CPU; preset byte count can initiate variable-length DMA transfers.
- Seven sources of vectored/nonvectored interrupts which include pattern-match, byte count, empty or full buffer status; a dedicated "mailbox" register with interrupt capability provides CPU/CPU communication.
- REQUEST/$\overline{\text{WAIT}}$ lines control high-speed data transfers.
- All functions are software controlled via directly addressable read/write registers.

The Z8038 FIO provides an asynchronous 128-byte FIFO buffer between two CPUs or between a CPU and a peripheral device. This buffer interface expands to a 16-bit or wider data path and expands in depth to add as many Z8060 FIFOs (and an additional FIO) as are needed.

The FIO manages data transfers by assuming Z-BUS, non-Z-BUS microprocessor (a generalized microprocessor interface), Interlocked 2-Wire Handshake, and 3-Wire Handshake operating modes. These modes interface dissimilar CPUs or CPUs and peripherals running under differing speeds or protocols, allowing asynchronous data transactions and improving I/O overhead by as much as two orders of magnitude.

Z8060 Z8000™ Z-FIFO Buffer Unit and Z-FIO Expander

FEATURES

- Bidirectional, asynchronous data transfer capability
- Large 128-bit-by-8-bit buffer memory
- Two-wire, interlocked handshake protocol
- Wire-ORing of empty and full outputs for sensing of multiple-unit buffers
- 3-state data outputs
- Connects any number of FIFOs in series to form buffer of any desired length.
- Connects any number of FIFOs in parallel to form buffer of any desired width

The Z8060 First-In First-Out (Z-FIFO) Buffer Unit consists of a 128-bit-by-8-bit memory, bidirectional data transfer and handshake logic. The structure of the Z-FIFO unit is similar to that of other available buffer units. Z-FIFO is a general-purpose unit; its handshake logic is compatible with that of other members of Zilog's Z8 and Z8000 Families.

© IC MASTER 1984

Z8065
Z8000™ Z-BEP
Burst Error Processor

Zilog

FEATURES

- Detects errors in serial data up to 585,442 bits in length
- Implements correction of a detected error burst of up to 12 bits in length
- Handles effective data rates of up to 20M bits per second
- Provides four industry-standard polynomials for error detection
- Designed for use in both microprocessor and microprogrammed disk-controlled systems
- Provides three correction algorithms:
  - □ Full-period clock-around method for conformance to current practices
  - □ Chinese remainder theorem, which reduces correction time by orders of magnitude
  - □ Reciprocal polynomial, which allows correction with 48-bit code

The Z8065 Burst Error Processor (BEP) provides error detection and correction facilities for high-performance, high-density disk systems and any other system in which high-speed serial data transfers occur.

For error detection, the BEP provides a selection of four standard polynomials, including the more popular 56-bit and 48-bit versions, to satisfy a broad range of applications. During write operations, the BEP generates check-bit words, which are appended to the record being written onto the disk. These check-bit words are then used in subsequent reads and, if necessary, in correction operations.

Z8068
Z8000™ Z-DCP Data Ciphering Processor

FEATURES

- Encrypts and decrypts data using the National Bureau of Standards encryption algorithm.
- Supports three standard ciphering modes: Electronic Code Book, Chain Block and Cipher Feedback.
- Three separate registers for encryption, decryption, and master keys improve system security and throughput by eliminating frequent reloading of keys.
- Three separate programmable ports (master, slave, and key data) provide hardware separation of encrypted data, clear data, and keys.
- Data rates greater than 1M bytes per second can be handled.
- Key parity check.

The Z8068 Data Ciphering Processor (DCP) is an n-channel, silicon-gate LSI device, which contains the circuitry to encrypt and decrypt data using National Bureau of Standards encryption algorithms. It is designed to be used in a variety of environments, including dedicated controllers, communication concentrators, terminals, and peripheral task processors in general processor systems.

The DCP provides a high throughput rate using Cipher Feedback, Electronic Code Book, or Cipher Block Chain operating modes. The provision of separate ports for key input, clear data, and enciphered data enhances security.

The Z8068 DCP is designed to interface directly to Zilog's Z-BUS®.

© IC MASTER 1984

Zilog

Z800™ MPU Microprocessing Unit

FEATURES

- Enhanced Z80® instruction set that maintains object-code compatibility with Z80 microprocessor.
- On-chip paged Memory Management Unit (MMU).
- Large memory address space: 512K byte and 16M byte versions.
- On-chip, high-speed local or cache memory.
- High performance 16-bit Z-BUS interface or 8-bit Z80-compatible bus interface.
- Four on-chip 16-bit counter/timers.
- Four on-chip DMA channels.
- On-chip full duplex UART.
- 10-25 MHz CPU processor clock.

Zilog's new Z800 family of 8- and 16-bit microprocessors features high-performance microprocessors designed to give the end-user a powerful and cost-effective solution to application requirements. The family consists of the 8-bit Z80-Bus microprocessors that are packaged in 40-and 64-pin dual in-line packages, and 16-bit Z-BUS microprocessors in 40- and 64-pin packages. The Z800 family incorporates advanced architectural features that allow fast and efficient throughput and increased memory addressing while maintaining Z80 object code compatibility. Z800 microprocessors offer both a continuing growth path for present Z80-based designs and a high-performance microprocessor for future designs.

Central to the Z800 microprocessors is an enhanced version of the Z80 Central Processing Unit (CPU). To assure system integrity, the Z800 microprocessors can operate in either user or system mode, allowing protection of system resources from user tasks and programs.

The Z80 CPU instruction set has been retained, meaning that the Z800 microprocessors are completely binary-code compatible with present Z80 code. The basic addressing modes of the Z80 microprocessor have been augmented with the addition of Indexed mode with full 16-bit displacement, Program Counter Relative with 16-bit displacement, Stack Pointer Relative with 16-bit displacement, and Base Index mode. The new addressing modes are incorporated into many of the old Z80 CPU instructions, resulting in greater flexibility and power.

The Z800 microprocessors have an on-chip Memory Management Unit (MMU) that enables the microprocessors to address either 512K bytes or 16M bytes, depending on the device package. In addition to enabling the address space to be expanded, the MMU performs other memory management functions previously handled by dedicated off-chip memory management devices.

I/O address space has been expanded by the addition of an I/O Page register used to select pages of I/O addresses. The 8-bit I/O Page register can select one of 256 possible pages of I/O addresses to be active at one time, allowing a total of 64K I/O addresses to be accessed.

There are 256 bytes of on-chip memory present on all members of the Z800 family. This memory can be configured as a high-speed cache or as a fixed address local memory. When configured as a cache, the memory can be programmed to be instruction only, data only, or both data and instruction.

Many features that have traditionally been handled by external peripheral devices have been incorporated in the design of the Z800 microprocessors. The "on-chip peripherals" reduce system chip count and reduce interconnection on the external bus. All members of the Z800 family contain an on-chip clock oscillator. Also present is a refresh controller that provides 10-bit refresh addresses for dynamic memories. The 64-pin versions of the Z800 MPU contain additional on-chip peripherals to provide system design flexibility.

© IC MASTER 1984

Zilog

Z80,000™ CPU Central Processing Unit

FEATURES

- Full 32-bit architecture and implementation
- 4 gigabytes (billion bytes) of directly addressable memory
- Linear or segmented address space
- Virtual memory management integrated with CPU
- On-chip cache memory
- General-purpose register file with 16 32-bit registers
- Nine general addressing modes
- Numerous data types include bit, bit field, logical value, signed integer, and string
- Mainframe performance
- Extended Processing Architecture supports floating point operations
- Regular use of operations, addressing modes, and data types in instruction set
- System and Normal modes of operation with separate stacks
- Sophisticated interrupt and trap handling
- Software is a binary-compatible extension of Z8000™ software
- Hardware is compatible with other Z-BUS™ components

The Z80,000 CPU is an advanced, high-end 32-bit microprocessor that integrates the architecture of a mainframe computer into a single chip. While maintaining full compatibility with Z8000 family software and hardware, the Z80,000 CPU offers greater power and flexibility in both its architecture and interface capability. Operating systems and compilers are easily developed in the Z80,000 CPU's high-quality environment, and the hardware interface provides for connection to a wide variety of system configurations.

Addresses in the Z80,000 CPU are 32 bits. This allows direct addressing of 4G bytes in each of four address spaces: System-mode data, System-mode instruction, Normal-mode data, and Normal-mode instruction. The CPU supports three modes of address representation. The 16-bit compact addresses are compatible with Z8000 nonsegmented mode. The 32-bit segmented addresses include both 16-bit offset, which is compatible with Z8000 segmented mode, and 24-bit offset. In addition a full 32-bit linear address space is provided.

The CPU features a general-purpose register file with sixteen 32-bit registers, and nine operand addressing modes. The various addressing modes allow encoding choices for compact representation or for full 32-bit addressing. The instruction set can operate on bit, bit field, logical value, signed integer, unsigned integer, address, string, stack, and packed decimal byte data types. Logical and arithmetic instructions operate on bytes (8 bits), words (16 bits) and longwords (32 bits). The Extended Processing Architecture (EPA) supports floating point operations. In addition, the instruction set is highly regular in combining operations, data types, and addressing modes.

There are two main operating modes, System and Normal, supported by separate stacks. User programs operate in Normal mode, while sensitive operating system functions are performed in System mode. This protects critical parts of the operating system from user access.

Memory management is fully integrated with the CPU; no external support circuitry is necessary. A paging address translation mechanism is implemented. Registers in the CPU point to address translation tables located in memory; the most recently used table entries are kept in a Translation Lookaside Buffer in the CPU. The CPU performs logical to physical address translation and access protection for each memory reference.

In summary, the Z80,000 CPU meets and surpasses the requirements of medium and high-end microprocessor systems for the 1980s. Software program development is easily accomplished with the CPU's sophisticated architecture. The highly pipelined design, on-chip cache, and external interface support systems ranging from dedicated controllers to mainframe computers. While Zilog continues to develop support for the Z80,000 CPU, Z8000 peripherals and development software are fully compatible with this latest in Zilog's line of high-performance microprocessors.

© IC MASTER 1984

Z8070 Z-APU Arithmetic Processing Unit

Zilog

FEATURES

- Fast and complete implementation of proposed IEEE Standard P754 Draft 10.0 for Binary Floating-Point Arithmetic. Performs a single-precision multiplication in under three microseconds (with a 10 MHz clock).
- Data types supported are: Single, Double, and Double Extended floating-point; 16- and 32-bit integer; BCD strings.
- Operations supported include add, subtract, multiply, divide, square root, remainder, and compare.
- Interfaces as coprocessor to Z800™, Z8000™, and Z80,000™ CPUs.
- Speed versions offered from 10 MHz to 25 MHz.
- Provides for conversion of binary integer and Binary Coded Decimal formats to and from floating-point format.
- Can be interfaced through Zilog's Extended Processing Architecture or a general-purpose interface.
- Frees CPU for performance of other tasks.

The Z8070 Arithmetic Processing Unit (APU) is an Extended Processing Unit (EPU) designed to perform floating-point arithmetic functions while operating in parallel with a CPU. By monitoring the same instruction stream as the CPU, it is able to identify and execute those instructions intended for it, thereby freeing the CPU to perform other activities.

The APU can use Zilog's Extended Processing Architecture (EPA) for the Z800, Z8000, and Z80,000, or it can be integrated into systems based on other popular microprocessors, using a general-purpose interface.

The APU supports several data formats, enabling it to handle a wide range of business and scientific applications. These include three binary floating-point formats and four integer formats, including one for variable length Binary Coded Decimal (BCD) strings. All of the APU's internal numeric manipulations use an 80-bit floating-point format; however, transfers of data between the APU's data registers and CPU registers or memory can use any of the formats desired, as specified in the floating point instruction.

Floating-point arithmetic operations are performed according to the requirements of the proposed IEEE Standard for floating-point arithmetic. The Z8070 supports:

- Single (32-bit), Double (64-bit), and Extended (80-bit) Precision floating-point number formats.
- Addition, subtraction, multiplication, division, square-root, remainder, and compare operations.
- Conversions between different floating-point formats.
- Conversions between binary integers and floating-point numbers.
- Conversions between decimal integers and floating-point numbers.
- Non-numbers (NaNs) and infinity arithmetic.
- Floating-point exceptions and their handling.

© IC MASTER 1984

Z8530 SCC Serial Communications Controller

Zilog

FEATURES

- Two independent, 0 to 1M bit/second, full-duplex channels, each with a separate crystal oscillator, baud rate generator, and Digital Phase-Locked Loop for clock recovery.
- Multi-protocol operation under program control; programmable for NRZ, NRZI, or FM data encoding.
- Asynchronous mode with five to eight bits and one, one and one-half, or two stop bits per character; programmable clock factor; break detection and generation; parity, overrun, and framing error detection.
- Synchronous mode with internal or external character synchronization on one or two synchronous characters and CRC generation and checking with CRC-16 or CRC-CCITT preset to either 1s or 0s.
- SDLC/HDLC mode with comprehensive frame-level control, automatic zero insertion and deletion, I-field residue handling, abort generation and detection, CRC generation and checking, and SDLC Loop mode operation.
- Local Loopback and Auto Echo modes.

The Z8530 SCC Serial Communications Controller is a dual-channel, multi-protocol data communications peripheral designed for use with conventional non-multiplexed buses. The SCC functions as a serial-to-parallel, parallel-to-serial converter/controller. The SCC can be software-configured to satisfy a wide variety of serial communications applications. The device contains a variety of new, sophisticated internal functions including on-chip baud rate generators, Digital Phase-Locked Loops, and crystal oscillators that dramatically reduce the need for external logic.

Z8531 ASCC Asynchronous Serial Communications Controller

FEATURES

- Two independent, 0 to 1M bit/second, full-duplex channels, each with a separate crystal oscillator and baud rate generator.
- Programmable for NRZ, NRZI, or FM data encoding.
- Asynchronous communications with five to eight bits per character and one, one and one-half, or two stop bits per character; programmable clock factor; break detection and generation; parity, overrun, and framing error detection.
- Local Loopback and Auto Echo modes.

The Z8531 ASCC Asynchronous Serial Communications Controller is a dual-channel, multi-protocol data communications peripheral designed for use with conventional non-multiplexed buses. The ASCC functions as a serial-to-parallel, parallel-to-serial converter/controller. The device contains a variety of new, sophisticated internal functions including on-chip baud rate generators and crystal oscillators that dramatically reduce the need for external logic.

The ASCC also has facilities for modem controls in both channels. In applications where these controls are not needed, the modem controls can be used for general-purpose I/O.

© IC MASTER 1984

Z8536 CIO Counter/Timer and Parallel I/O Unit

Zilog

FEATURES

- Two independent 8-bit, double-buffered, bidirectional I/O ports plus a 4-bit special-purpose I/O port. I/O ports feature programmable polarity, programmable direction (Bit mode), "pulse catchers," and programmable open-drain outputs.
- Four handshake modes, including 3-Wire (like the IEEE-488).
- REQUEST/$\overline{\text{WAIT}}$ signal for high-speed data transfer.
- Flexible pattern-recognition logic, programmable as a 16-vector interrupt controller.
- Three independent 16-bit counter/timers with up to four external access lines per counter/timer (count input, output, gate, and trigger), and three output duty cycles (pulsed, one-shot, and square-wave), programmable as retriggerable or nonretriggerable.
- Easy to use since all registers are read/write.

The Z8536 CIO Counter/Timer and Parallel I/O element is a general-purpose peripheral circuit, satisfying most counter/timer and parallel I/O needs encountered in system designs. This versatile device contains three I/O ports and three counter/timers. Many programmable options tailor its configuration to specific applications. The use of the device is simplified by making all internal registers (command, status, and data) readable and (except for status bits) writable. In addition, each register is given its own unique internal address, so that any register can be accessed in two operations. All data registers can be directly accessed in a single operation. The CIO is easily interfaced to all popular microprocessors.

Z8581 CGC Clock Generator and Controller

FEATURES

- Two independent 20 MHz oscillators generate two 10 MHz clock outputs and one 20 MHz clock output.
- Oscillator input frequency sources can be either crystals or external oscillators.
- Outputs directly drive the Z80 and Z8000 microprocessor clock inputs.
- Can be used as a general-purpose clock generator.
- 18-pin slimline package used; single +5 V dc power required.
- Provides ability to stretch High and/or Low phase of clock signal under external control.
  - On-chip 2-bit counter can be used to selectively stretch clock cycles.
- On-chip reset logic
  - Reset output is synchronized with System Clock output.
  - Power-up reset period is maintained for a minimum of 30 ms.
  - External input initiates system reset.

The Z8581 Clock Generator and Controller is a versatile addition to Zilog's family of Universal microprocessor components. The selective clock-stretching capabilities and variety of timing outputs produced by this device allow it to easily meet the timing design requirements of systems with microprocessors and LSI peripherals. The clock output drivers of the Z8581 also meet the non-TTL voltage requirements for driving NMOS clock inputs with no additional external components.

© IC MASTER 1984

Z8® Family of Microcomputers Z8601•Z8603•Z8601L

Zilog

FEATURES

- Z8601 Single-Chip Microcomputer with 2K ROM; Z8603 Prototyping Device with EPROM interface.
- Complete microcomputer, 2K bytes of ROM, 128 bytes of RAM, 32 I/O lines, and up to 62K bytes addressable external space each for program and data memory.
- 144-byte register file, including 124 general-purpose registers, four I/O port registers, and 16 status and control registers.
- Average instruction execution time of 1.5 μs, maximum of 3 μs.
- Vectored, priority interrupts for I/O, counter/timers, and UART.
- Full-duplex UART and two programmable 8-bit counter/timers, each with a 6-bit programmable prescaler.
- Register Pointer so that short, fast instructions can access any of nine working register groups in 1 μs.
- On-chip oscillator that accepts crystal or external clock drive.
- Low-power standby option that retains contents of general-purpose registers.
- Single +5 V power supply—all pins TTL-compatible.

The Z8601 microcomputer introduces a new level of sophistication to single-chip architecture. Compared to earlier single-chip microcomputers, the Z8601 offers faster execution, more efficient use of memory, more sophisticated interrupt, input/output and bit-manipulation capabilities, and easier system expansion.

Under program control, the Z8601 can be tailored to the needs of its user. It can be configured as a stand-alone microcomputer with 2K bytes of internal ROM, a traditional microprocessor that manages up to 124K bytes of external memory, or a parallel-processing element in a system with other processors and peripheral controllers linked by the Z-BUS. In all configurations, a large number of pins remain available for I/O.

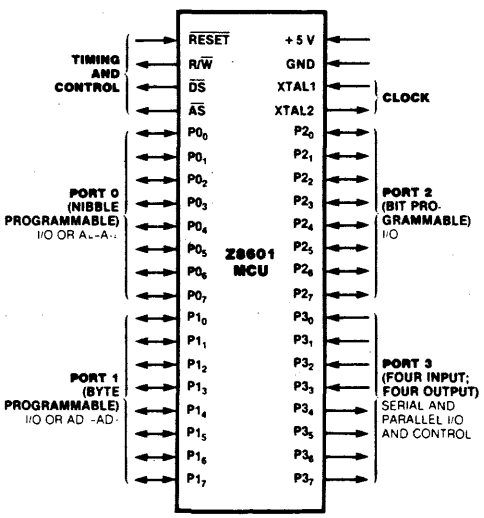

Pin Functions

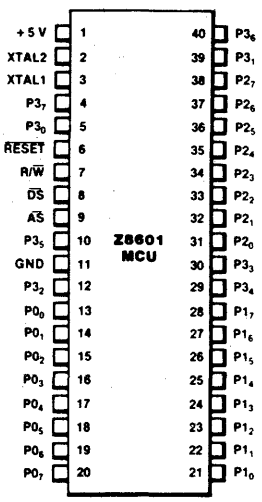

Pin Assignments

© IC MASTER 1984

Z8® Family of Microcomputers Z8611•Z8612•Z8613

Zilog

FEATURES

- Complete microcomputer, 4K bytes of ROM, 128 bytes of RAM, 32 I/O lines, and up to 60K bytes addressable external space each for program and data memory.
- 144-byte register file, including 124 general-purpose registers, four I/O port registers, and 16 status and control registers.
- Average instruction execution time of 1.5 μs, maximum of 3 μs.
- Vectored, priority interrupts for I/O, counter/timers, and UART.
- Full-duplex UART and two programmable 8-bit counter/timers, each with a 6-bit programmable prescaler.
- Register Pointer so that short, fast instructions can access any of nine working-register groups in 1 μs.
- On-chip oscillator which accepts crystal or external clock drive.
- Low-power standby option that retains contents of general-purpose registers.
- Single +5 V power supply—all pins TTL-compatible.

The Z8611 microcomputer introduces a new level of sophistication to single-chip architecture. Compared to earlier single-chip microcomputers, the Z8611 offers faster execution, more efficient use of memory, more sophisticated interrupt, input/output and bit-manipulation capabilities, and easier system expansion.

Under program control, the Z8611 can be tailored to the needs of its user. It can be configured as a stand-alone microcomputer with 4K bytes of internal ROM, a traditional microprocessor that manages up to 120K bytes of external memory, or a parallel-processing element in a system with other processors and peripheral controllers linked by the Z-BUS. In all configurations, a large number of pins remain available for I/O.

Z8® Family Z8671 Microcomputer BASIC/Debug Interpreter

FEATURES

- The Z8671 MCU is a complete microcomputer preprogrammed with a BASIC/Debug interpreter. Interaction between the interpreter and its user is provided through an on-board UART.
- BASIC/Debug can directly address the Z8671's internal registers and all external memory. It provides quick examination and modification of any external memory location or I/O port.
- The BASIC/Debug interpreter can call machine language subroutines to increase execution speed.
- The Z8671's auto start-up capability allows a program to be executed on power-up or Reset without operator intervention.
- Single +5 V power supply—all I/O pins TTL-compatible.
- 8 MHz/12 MHz

The Z8671 Single-Chip Microcomputer (MCU) is one of a line of preprogrammed chips—in this case with a BASIC/Debug interpreter in ROM—offered by Zilog. As a member of the Z8 Family of microcomputers, it offers the same abundance of resources as the other Z8 microcomputers.

Because the BASIC/Debug interpreter is already part of the chip circuit, programming is made much easier. The Z8671 MCU thus offers a combination of software and hardware that is ideal for most industrial control applications. The Z8671 MCU allows fast hardware tests, and bit-by-bit examination and modification of memory location, I/O ports, or registers. It also allows bit manipulation and logical operations. A self-contained line editor supports interactive debugging, further speeding up program development.

© IC MASTER 1984

Z8® Z8681/82 ROMless Microcomputer

Zilog

FEATURES

- Complete microcomputer, 24 I/O lines, and up to 64K bytes of addressable external space each for program and data memory.
- 143-bye register file, including 124 general-purpose registers, three I/O port registers, and 16 status and control registers.
- Vectored, priority interrupts for I/O, counter/timers, and UART.
- On-chip oscillator that accepts crystal or external clock drive.
- Full-duplex UART and two programmable 8-bit counter/timers, each with a 6-bit programmable prescaler.
- Register Pointer so that short, fast instructions can access any one of the nine working-register groups.
- Low-power standby option that retains contents of general-purpose registers.
- Single +5 V power supply—all I/O pins TTL compatible.
- Available in 8 and 12 MHz versions.

The Z8681 and Z8682 are ROMless versions of the Z8 single-chip microcomputer. The Z8682 is usually more cost effective. These products differ only slightly and can be used interchangeably with proper system design to provide maximum flexibility in meeting price and delivery needs. The Z8681/82 offers all the outstanding features of the Z8 family architecture except an on-chip program ROM. Use of external memory rather than a preprogrammed ROM enables this Z8 microcomputer to be used in low volume applications or where code flexibility is required.

The Z8681/82 can provide up to 16 output address lines, thus permitting an address space of up to 64K bytes of data or program memory. Eight address outputs (AD_0–AD_7) are provided by a multiplexed, 8-bit, Address/Data bus. The remaining 8 bits can be provided by the software configuration of Port 0 to output address bits A_8–A_{15}.

Z8® Family of Universal Peripheral Controllers

FEATURES

- Complete slave Z8 microcomputer, for distributed processing use.
- Unmatched power of Z8 architecture and instruction set.
- Three programmable I/O ports, two with optional 2-Wire Handshake.
- Six levels of priority interrupts from eight sources: six from external sources and two from internal sources.
- Two programmable 8-bit counter/timers each with a 6-bit prescaler. Counter/Timer T0 is driven by an internal source, and Counter/Timer T1 can be driven by internal or external sources. Both counter/timers are independent of program execution.
- 256-byte register file, accessible by both the master CPU and UPC, as allocated in the UPC program.
- 2K bytes of on-chip ROM for efficiency and versatility.

The Universal Peripheral Controller (UPC) is an intelligent peripheral controller for distributed processing applications. The UPC unburdens the host processor by assuming tasks traditionally done by the host (or by added hardware), such as performing arithmetic, translating or formatting data, and controlling I/O devices. Based on the Z8 microcomputer architecture and instruction set, the UPC contains 2K bytes of internal program ROM, a 256-byte register file, three 8-bit I/O ports, and two counter/timers.

The UPC is offered in two basic configurations: the Z8090/4, which interfaces to multiplexed address/data CPUs such as the Z8000, and the Z8590/4, which interfaces with non-multiplexed CPUs such as the Z80. Both devices have the same instruction set and I/O port configuration. The difference in the devices is in the UPC-to-host interface pins and the sequence of data transfer between the units.

The UPC offers fast execution time, an effective use of memory, and sophisticated interrupt, I/O, and bit manipulation. Using a powerful and extensive instruction set combined with an efficient internal addressing scheme, the UPC speeds program execution and efficiently packs program code into the on-chip ROM.

© IC MASTER 1984

Zilog

Software Information

To facilitate program development, Zilog offers the complementary PLZ application languages, PLZ/SYS and PLZ/ASM. Similar constructs within the PLZ languages permit the user to combine high-level, machine-independent modules together with machine-dependent modules.

PLZ/SYS is a procedure-oriented language with a style that blends elements of other well known languages such as Pascal, ALGOL, PL/I and C.

PLZ/ASM is a structured assembly language that provides all the capabilities needed to manage the microprocessor resources such as registers, memory accesses, and I/O operations.

This modular programming technique enables the programmer to concentrate on program design rather than on development system software.

The Z8000 Cross-Software Package, running on UNIX,* enables multi-user access for enhanced software development. The package consists of a complete set of software tools for developing Z8000 programs on DEC's PDP 11/44, 11/45, and 11/70 systems. The C language, including compiler and code optimizer, protects the user's software investment by permitting program transportability.

The ZRTS Kernel, a small executive program, saves software development time by providing the core of a real-time multitasking operating system in PROMable form. Using ZCL, a high-level configuration language, the designer can define the target system and produce a memory-efficient, cost-effective end product.

Even more software products include the RIO Electric Blackboard, a multi-window full-screen text editor, and software development packages with utility programs that aid and simplify software development for the Z8 MCU and for Z8000 programs on the Z8000 Development Module.

*UNIX is a trademark of Bell Laboratories.

System 8000™

FEATURES

- 6 MHz Z8001A CPU, three 6 MHz Z8010 MMUs for dynamic segment relocation, plus 6 MHz Z80B CPUs.
- ZEUS, Zilog's enhanced UNIX* operating system:
  - Hierarchical file system
  - Compatible file, device and interprocess I/O
- Powerful screen-oriented text editor.
- Selection of high-level languages: C, FORTRAN 77, BASIC, Pascal, COBOL, PLZ/SYS.
- System 8000 and ZEUS can be upgraded for use with 32-bit microprocessors to assure next-generation compatibility.
- Free-standing modular unit built as a multistation computing facility for office and laboratory environment.

The System 8000 Family members are fully-compatible "supermicros" whose high-performance, multiuser, multitasking capabilities are based on the Z8000 CPU.

*UNIX is a trademark of Bell Laboratories.

System 8000 incorporates a high-performance Winchester disk, as well as intelligent disk and tape controllers to further improve performance. All models have a common CPU board and peripheral controllers, and use identical operating system software (ZEUS). A UNIX-based operating system, ZEUS is specifically designed for software development and text processing. Numerous development tools are available, including the programming languages PLZ/ASM, PLZ/SYS, C, Pascal, and FORTRAN 77. Because ZEUS treats emulators as System 8000 peripherals, System 8000 can combine with EMS 8000, Z-SCAN 8000, or non-Zilog emulators to provide total product development support for multiple microprocessors.

Model II. The System 8000 Model II has been specifically designed for business and office environments. The system is small enough to fit under a desk, yet can provide computing power for up to eight users simultaneously. This general-purpose, time-sharing system is ideally suited for commercial needs.

© IC MASTER 1984

The Model II features reliable, field-proven VLSI components such as the Z8001A CPU (which supports separate code and data address spaces) and three Z8010A Memory Management Units.

Models 21 and 31. System 8000 Models 21 and 31 are high-performance, high-capacity systems for 8 to 24 users. Model 21, designed for user growth, offers a standard 10-card slot cage; expansion to 18 slots is possible with an Expansion Chassis option. Model 21 offers 1MB of error-correcting memory (expandable to four MB), an 8" Winchester disk with 32MB storage capacity (expandable to 128MB), and a 17-MB tape cartridge drive for backup. Model 31 substitutes an 80MB SMD-compatible Winchester disk for the Model 21's 32-MB drive. Using as many as four such drives, the unit can offer up to 320MB of storage capacity.

EMS 8000 Emulator System

FEATURES

- Snapshot feature permits partitioning of a large real-time trace module into many small trace memories.
- Up to 126K bytes of high-speed, static mappable memory can be accessed by the target system.
- A pulse output feature permits use of a high-end logic analyzer.
- Network debugging is supported.
- Full access is permitted to the target microprocessor's registers, memory and I/O space.
- A "transparent" mode allows the same terminal to be used for host and EMS user interface.
- Emulates Z8001/3 or Z8002 CPUs at 6MHz clock rates.
- Complex triggering.
- Large real-time trace buffer.
- Large mappable memory space.
- Real-time partitionable trace module for multiple recordings of program execution.
- Three parallel event comparators that can be allocated for trigger, trace, breakpoint recognition, and enable/disable functions.
- General-purpose counter for benchmarking critical software routines.

The Emulator System 8000 (EMS) is a state-of-the-art in-circuit subsystem. The EMS supports the software/hardware engineer in developing products using the Zilog Z8000 family of microprocessors and peripheral components. Combined with Zilog's enhanced UNIX* System (ZEUS), EMS 8000 provides the designer with a complete and powerful set of tools for speeding up the product development cycle.

The EMS links the application software developed on a host system and the target system, and aids in the integration of the software into the target system by executing in a real-time environment. The EMS uses the full capability of the target microprocessor and can start or stop program execution or perform single-step execution. The user has full access to the target microprocessor's registers, memory, and I/O space.

*UNIX is a trademark of Bell Laboratories.

Z8000™ Emulator Z-SCAN 8000

FEATURES

- Provides real time emulation up to 4 MHz of the Z8001 and Z8002 CPUs.
- Two RS-232C serial ports make it a peripheral usable with most standard CRTs and software hosts.
- Transparent operation permits direct communication between CRT and host without physical disconnect.
- Highly interactive, screen-oriented user interface makes Z-SCAN easy to use.
- Shadow monitor removes all restrictions on target system memory space, making it fully available to the user.
- High-speed mappable memory (no wait states) is available to simulate target system RAM/ROM.

The Z-SCAN 8000 Emulator is an in-circuit emulator that has been designed as a peripheral unit for Zilog's Z8001 and Z8002 16-bit microprocessors. Interfacing via two RS-232C serial ports to host and CRT terminal, Z-SCAN 8000 can work with Zilog's family of development hosts.

Because it employs a standard serial interface, Z-SCAN 8000 can also be used with virtually any software host system that runs a cross assembler or cross compiler capable of generating Z8000 code. Communication between the host system and Z-SCAN 8000 is with a standard serial format requiring only a simple upload and download utility to operate. For PROM-based target systems, Z-SCAN can operate stand-alone with a CRT terminal because the monitor and debug software is EPROM-resident.

Z8000™ Development Module

FEATURES

- Z8001/Z8002 CPU evaluation and debug support
- 16K Words dynamic RAM (expandable to 32K for user code execution and debug
- 32 programmable I/O lines
- EPROM monitor and debugger
- Transparent operation allows software development without disconnection from CRT and host system
- RS-232C standard serial interfaces compatible with most CRT terminals and development hosts
- Wire-wrap area for prototyping

The Z8000 Development Module is a complete, single-board microcomputer that is used as a tool for the evaluation and debug of Z8000-based microprocessor systems. The Development Module is used in the first stages of the design and development process, not only as a tool for evaluating Z8000 microprocessor capabilities, but also as an environment in which code can be executed and debugged.

Z-SCAN 8 Z8® Emulator

FEATURES

- Provides real-time emulation capability for the family of Z8 microcomputers.
- Operates with Zilog systems and other hosts; Z-SCAN 8 uses standard RS-232 links and is compatible with many standard CRTs and software hosts. This includes Zilog's S8000 systems and others with user-supplied load/save routines and cross-software support.
- Hardware/software debugging is fast and convenient. Two screens display the status of the Z-SCAN 8 monitor and Z8 target resources. Target memory can be displayed and modified in a scrollable window.
- Fulfills the user's essential real-time trace, two complex breakpoints, single-step capability, and four blocks of mappable memory.
- Interactive and easy to use. Commands are selected from menus; command arguments are self-prompting.

The Z-SCAN 8 Emulator is a combination of hardware and software that allows efficient, interactive emulation of the Z8 microcomputer. By the simple exchange of target devices, the selected Z8 MCU can be emulated in a realistic mode that allows user inspection and control over the environment being tested. Real-time trace, two breakpoints, single-step capability, and extensive mappable memory ensure the user a tool that accurately simulates the anticipated Z8 operating environment.

Z-SCAN 8 is an in-circuit emulator designed specifically for Zilog's Z8601 (2K), Z8611 (4K), and Z8681/82 (ROMless) microcomputers. Z-SCAN 8 works with Zilog's family of development hosts, interfacing via two RS-232 serial ports to the host and a CRT terminal.

© IC MASTER 1984

Z8® Development Module

FEATURES

- Two 4K Z8s are used on the board: one as board manager and one for emulation (without real-time trace) or other user-defined configuration.
- 4096 bytes of static RAM allow convenient creation and debugging of user code.
- On-board socket tests user code in a 2716 or 2732 EPROM.
- Up to 4096 hardware breakpoints on address compare cover the entire internal ROM space.
- Versatile monitor software allows debugging, with register/memory examination and manipulation, and file upload and download.
- "Transparent" operation allows terminal-to-host communication without disconnecting the Development Module.
- Wire-wrap area for prototyping.
- Z8 board management is operated at 7.3728 MHz for baud rate purposes. The User Z8 has switch-selectable 8 or 12 MHz crystals.

The Z8 Development Module is a single-board microcomputer system specifically designed to assist in the development and evaluation of hardware and software designs based on the Z8 microcomputer family. It allows the user to build a prototype using the Z8 prototyping device, thereby developing code that will eventually be mask-programmed into the Z8 on-chip ROM.

Z8® Software Development Package

FEATURES

- Structured assembly language with high-level constructs.
- Relocatable and absolute object code format.
- Free format statements allow indentation and spacing for readability.
- External symbol references.
- Global symbol definitions.

The Z8 Software Development Package consists of five utility programs that aid and simplify software development for Z8-based systems. Z8 PLZ/ASM, part of Zilog's PLX family, brings all the advantages of modular programming to Z8 software development. The programming task can be broken into easily managed modules, giving more work assignment options to the engineering manager and a clearcut structure to the individual programmer. The Z8 linker completes the task by combining the modules and resolving any external references.

© IC MASTER 1984

High-Reliability Microcircuits

GENERAL DESCRIPTION

Zilog offers high-reliability versions of the entire family of Z8, Z80, and Z8000 logic circuits, processed in accordance with the requirements of MIL-STD-833 (Test Methods and Procedures for Microelectronics). The Z80 and Z8000 CPUs are currently Qualified Products, Level II MIL-M-38510.

General Considerations. Zilog high-reliability microcircuits are designed to meet the full military temperature range of −55°C to +125°C and are packaged in hermetic dual-in-line packages. These packages can reliably withstand the thermal shock requirements of MIL-STD-833, method 1011, Condition C (−65°C to +150°C). For industrial users, Zilog offers an extended operating temperature range of −40°C to +85°C. All of Zilog's high-reliability microcircuits receive 5004 processing in accordance with the requirements of MIL-STD-833.

MANUFACTURING AND PROCESS CONTROLS

Zilog high-reliability microcircuits will be processed and assembled in accordance with the requirements of Appendix A of MIL-M-38510 or MIL STD 883, as specified by customer purchase order. The following are some of the items contained in the Zilog Product Assurance Program Plan:

- A clear, concise procedure for converting a customer specification to a Zilog internal specification, assuring the customer that parts received meet or exceed specified requirements.
- A formalized training and testing program for operators and inspection personnel to ensure that each operation is performed correctly.
- An inspection system that includes a complete Incoming Inspection Laboratory and a Chemical Analysis Laboratory ensure that all materials, utilities, and work-in-progress meet Zilog requirements and specifications.
- Rigid requirements for the cleanliness of work areas and the maintenance of a Class 100 environment at all stations where critical operations are performed.
- A document control system to control changes in design, materials, and processes.
- An instrument maintenance and calibration program complying to the requirements of MIL-STD-45662 (Calibration System Requirements).
- A quality audit system in accordance with MIL-I-45208 (Quality Program Requirements).

Zilog offers a number of standard flows, which include both military and commercial temperature ranges.

© IC MASTER 1984

Integrated Circuits Magazine
The magazine for the engineering design strategist*

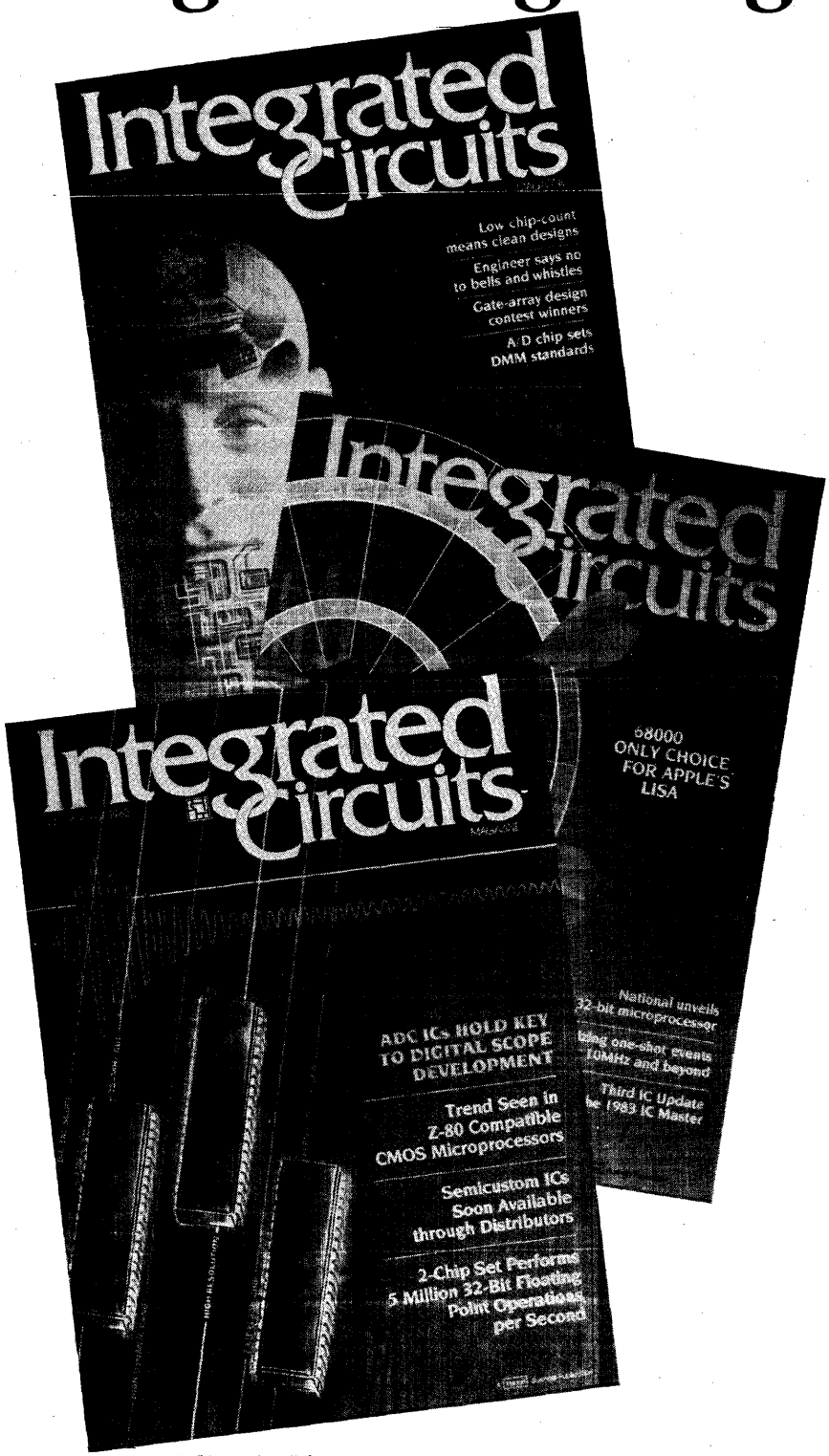

Integrated Circuits Magazine
Circulation Department
645 Stewart Ave.
Garden City, NY 11530
(516) 222-2500
TWX: 510-222-1673

Integrated Circuits Magazine is the only publication written for senior design engineers and engineering managers who specialize in the specifying and use of ICs and related components in the design of instruments, equipment and systems.

It is unique in that it concentrates on reporting *from the viewpoint of the user.*

Each issue of *Integrated Circuits Magazine* includes staff-written interviews with leading designers at major IC customers, as well as articles written by IC users themselves.

Regular features include: IC User Feedback Reports, Semicustom Design Techniques, IC Design Problems and Solutions. What's New in ICs, and much more.

To receive *Integrated Circuits Magazine* absolutely FREE† simply give us your authorization right now! Just fill out, sign, date and return the subscription card located inside the back cover of Volume I.

Card missing? Additional subscription cards available from publisher upon request.

Integrated Circuits Magazine is designed for *YOU.*

**Designers who must keep pace with contemporary engineering design techniques, practices and trends, and how they affect the selection and application of integrated circuits, microcomputers, boards, and systems.*

†Integrated Circuits Magazine is made available on a complimentary basis to those qualified recipients within the United States only.

Canadian and Foreign Subscriptions are available, prepaid by check or money order payable in United States currency, at the following rates: $35.00 per year Canadian/Foreign; $55.00 per year Foreign via Air Mail; $18.00 per year non-qualified Domestic United States.

INTRODUCTION TO MICROPROCESSOR DEVELOPMENT SYSTEMS

This section describes the tools used in developing software programs for microprocessors. Microprocessors supported range from 2-bit slice families and 4-bit processors to 32-bit machines. Development systems described in the Master Selection Guide range from simple, single-user text-editing stations to multiuser computers dedicated to software development. Manufacturers are sequenced alphabetically, and each system is described by a listing of performance parameters. These parameters include supported microprocessors, maximum user RAM, mass-memory size and type, software support. The software and tools listed range from standard executive programs to high-level language compilers and interpreters.

Detailed Product Information provided by:

Advanced Micro Devices	1901
American Automation	1902
Emulogic	1904
Fairchild	1906
Inmos Corporation	1913
Motorola Semiconductor	1914
National Semiconductor	1926
Signetics	1930
Texas Instruments	1931

The manufacturers listed above have provided detailed information on their latest and most significant products.

© IC MASTER 1984

EINFÜHRUNG MIKROPROZESSOR—ENTWICKLUNGS-SYSTEME

Deiser neue Abschnitt beschreibt alle verwendeten Hilfsmittel zur Entwicklung von Software für Mikroprozessoren. Die unterstützten Mikroprozessoren reichen von 2-Bit-Slice und 4-Bit Prozessoren bis zu 32-Bit Maschinen. Die im Master Selection Guide beschriebenen Entwicklungssysteme reichen von einfachen, Single-user Textedition-Stationen bis zu Multiuser-Computern für die Software-Entwicklung. Die Hersteller sind in alphabetischer Reihenfolge aufgeführt, und jedes System wird durch eine Auflistung de Funktionsparameter beschreiben. Diese Parameter umfassen die unterstützten Mikroprozessoren, die Größe von verwendbarem RAM, die Massenspeicher-Größe und Art, die Anzahl der anschließbaren Stationen und verfügbare Peripheriegeräte. Die Software-Hilfsmittel reichen von Standard Executive Programmen bis zu Compilern und Interpretern für höhere Programmiersprachen.

© IC MASTER 1984

INTRODUCTION AUX SYSTEMES DE DEVELOPPEMENT DES MICRO-ORDINATEURS

Cette Section est nouvelle cette année. Elle décrit les outils utilises dans le developpement des programmes software pour micro-ordinateurs. Les micro-ordinateurs considérés a'echelonnent des familles à 2 bits aux ordinateurs de 4 bits, et aux appareils de 32 bits. Les systèmes de développement décrits dans le Guide Général de Sélection vont de la simple station d'édition de texte pour un utilisateur, aux ordinateurs à utilisateurs multiples et dedies au developpement du software. Les fabricants sont énumérés par ordre alphabétique, et chaque système est décrit au travers d'une liste de paramètres de performance. Ces paramètres comprennent les micro-ordinateurs supportés, la RAM avec maximum d'utilisateurs, la taille et le type de mémoire de masse, le nombre de stations utilisatrices, et l'équipement périphérique disponible. Les outils software considérés s'etendent des programmes standards d'exécution aux programmes plus puissants de traduction de language et de compilation.

© IC MASTER 1984

INTRODUCCIÓN A LOS SISTEMAS DE DESARROLLO DEL MICROPROCESOR

Esta sección, nueva para este año, describe las herramientas usadas en el desarrollo de programas para microprocesores.

Microprocesores con radio de acción de familias de 2-bit y 4-bit a equipo de 32-bit. Sistemas de desarrollo descritas en la Guía Maestra de Selección abarca de una simple estación editora, a computadoras de uso múltiple dedicadas al desarrollo de programas. Los fabricantes aparecen en sequencia alfabética, y cada sistema es descrito con una lista de parámetros de rendimiento. Estos parámetros incluyen apoyo a microprocesores, uso máximo de RAM, tamaño y tipo de memorias, número de estaciones de operadores, y equipo periferal disponsible. Programas mencionados abarcan de programas ejecutivos standard a lenguaje de alto nivel para compiladores e intérpretes.

© IC MASTER 1984

マイクロプロセサー開発システムへの案内

本年から新たに加わったこのセクションにはマイクロプロセサーのソフトウエアプログラムを開発する為の情報が記載されています。カバーされているマイクロプロセサーは２ビットスライスファミリー，４ビットプロセサーから３２ビットマシーン迄あります。マスターセレクションガイド中の開発システムは簡単な個人が使用するテキスト編集ステーションからソフトウエア開発用多人数使用のコンピュータ迄と広くカバーされています。メーカーはＡＢＣ順に，各システムはその性能パラメーターの記載毎に説明しています。このパラメーターは必要なマイクロプロセサー，マキシマムユーザーＲＡＭ，マスメモリーサイズ，形名，ユーザーステーションの数，週辺機器等を網羅しています。

記載されているソフトウエア情報は標準エクザクティブプログラムから高級なランゲージコンパイラー，インタープリターに及んでいます。

© IC MASTER 1984

MDS: Dedicated or Universal?

Microprocessor development systems (MDSs) have evolved from simple design aids to dedicated computer systems. The variety of MDS hardware now available ranges from simple PROM programmers for entering hand-assembled code to sophisticated multiuser systems representing a sizeable capital investment.

High-end software tools generally are of no concern to designers who use microprocessors primarily for logic replacement. Many programs for these applications can be hand-written in machine code or in very simple assembly language, hand-assembled and edited manually with scissors and paste. But choosing a more sophisticated system requires understanding the relationships between the MDS, the processor it supports and the software tools available for assisting in program development.

Until recently, the choice was limited between a dedicated system supporting a single processor or a family of processors, and a universal system supporting several different processor families. Dedicated-system supporters argue that most of the 50 or more existing microprocessor companies can introduce at least one new processor each year, with each new processor often program-compatible with its predecessor. And it is more desirable to upgrade existing software for these new devices than to start a massive software redesign project.

Moreover, the argument continues, dedicated system suppliers (who also supply the microprocessors supported) can provide software development tools for new processors at least a year before they are available in universal systems. Finally, it is generally acknowledged that universality in an MDS often requires some sacrifice in depth of coverage. Implicit in these arguments, of course, is user commitment to a specific processor or vendor.

On the other hand, universal systems offer a repertoire of multivendor chip support, generally centered about 8-bit processors. The strongest argument for using these systems appears to be the freedom to evaluate the parade of new processor chips emerging from various semiconductor houses. For example, in addition to facilitating hardware/software integration of prototype design, available universal systems can compare the performance of an 8085 (Intel Corp.) against the Z80 (Zilog Inc.), 6800 or 6802 (Motorola Semiconductor Products Inc.), 3872 (Fairchild Camera and Instrument Corp.), the TMS9900 (Texas Instruments Inc.), and the 3870 and 3872 (Mostek Corp.).

To counter the threat posed by universal systems, some vendors are offering systems described as vertical rather than universal (horizontal) or dedicated. These systems support only one vendor's processors, but the devices supported represent a wide performance range. To illustrate, one MDS vendor's system supports 12 of the company's processors, which range from a 2-bit slice up through a 16-bit processor. A user can upgrade a basic system by adding an assembler, high-level language, and an in-circuit emulator module for any of the 12 processors.

Sometimes universality can be acquired with an existing dedicated MDS by upgrading the system with emulators and other development tools. Typically, the instrument connects between the host computer (or dedicated development system), using a different personality pod to provide real-time emulation for a variety of MPUs.

Multistation development systems become another option as program sizes grow. One programmer typically can generate 10 debugged and documented lines of code per day, each line representing from 2 to 10 bytes of machine code. If a time-critical project requires a 100-kbyte application program to be completed within 3 months, then at least 8 programmers are required, each generating 100 bytes of machine code per day. Such requirements need systems resembling a full-fledged computer. with price tags upwards of $100,000 and with as many as 8 programming stations.

Alternatively, several simple development systems can be linked to a mainframe to perform dedicated development functions such as compiling and debugging. The mainframe performs project management functions such as file-sharing and maintenance. If a universal system is needed, cross-software is available from both software houses and MDS vendors. Cross-software allows a program for one processor to be written on a machine containing a different processor. For example, a cross-assembler for the 6800 produces 6800 code, but it executes on a PDP-11 computer.

MDS Hardware

A typical MDS consists of a central processor, mass memory, control console, and software development tools — such as editors, assemblers, compilers and linkers — for translating the programming (source) language and revising the source text. Most systems also provide a printer for generating hard copy.

The CPU executes the control functions necessary for software development and can execute the editor, assembler or program under development.

Mass memory, also called the "file," stores operating programs, developed programs and data. Main system memory

MDS: Dedicated or Universal

stores data and host programs (editor, compiler, etc.) or developed programs. Stored data include editor workspace, symbol tables, input/output (I/O) buffers, and data generated during program development. Main memory can be extended by mass memory.

The lowest level of mass-memory media is punched paper tape in which data are entered by teletypewriter. Because of its low speed, this type of storage is recommended for developing programs having less than 100 lines of code.

Next is magnetic tape cassette with read/write speeds ranging up to 400 characters per second. Tape-cassette systems are economical for programs between 100 and 1000 lines of code.

Long programs require the speed of flexible-disc storage with data-transfer rates exceeding 1000 characters per second. Flexible-disc storage is recommended for programs with between 1000 and 10,000 lines of code. Longer programs require the megabit-per-second transfer rates of hard-disc systems which can store up to tens of megabytes of data. These systems are, of course, the most expensive.

Control consoles provide the means to input source programs, debugging commands, operating system commands and data, and they provide operator feedback such as assembly listings and register displays. Controlled by interactive software, these terminals provide continually updated CRT displays of register content and entire segments of the program under development.

CRT terminals are classified as either dumb, smart or intelligent. Dumb terminals are nonprogrammable and have a limited number of functions. Smart terminals contain an MPU, memory, or both, and they have text-editing capability. Intelligent terminals contain one or more MPUs that can be user-programmed.

To facilitate text editing, CRT displays generally provide information highlighting on the screen, blinking displays, insert/delete capability and smooth scrolling. Console keyboards provide 128 ASCII character code, and keyboard life typically is about 300-million operations. Intelligent keyboards usually have self-diagnostics displayed on the CRT.

As more logic signals formerly accessible for test procedures become buried within the microprocessor chip, the various debugging tools become also increasingly important elements of an MDS.

An in-circuit emulator is a logic card or module cable-connected to the microprocessor socket of the prototype system. The emulator duplicates the processor function and relays indications of system operation to the MDS console or terminal. Usually the MDS RAM simulates ROM or PROM in the system under test. After RAM content is debugged, it is transferred to the prototype's memory.

Single-step facility is a hardware debugging aid that allows the MDS operator to step through the program one instruction at a time while concurrently monitoring system operation.

A logic analyzer can set up breakpoints in the program (such as an address) that stop program execution when encountered. The analyzer stores a block of bus transactions in a limited amount of memory that is refreshed each cycle. When a breakpoint stops program execution, the analyzer displays a number of logical events occurring prior to the breakpoint. Thus the operator can determine if events leading to the breakpoints are correct and modify the program as required, or continue execution.

Printers provide hard-copy records of the developed program. Mechanical types are relatively slow, generating from 150 to 1800 lines per minute, and providing multiple copies of the printout. Higher speeds are provided by thermal, optical, chemical or electrical printers with speeds ranging up to about 21,000 lines per minute. Serial printers produce one character at a time, and line printers generate one line at a time in parallel-character format.

Many systems provide options for linking the MDS with other systems for data exchange. These include paper tape punch and reader, and a modem (modulator-demodulator) that connects an MDS to a large computer via telephone lines. Finally, most systems have either a standard or optional PROM programmer for entering developed programs into prototype memory.

Software Tools

MDS software-tool sophistication has become similar to that of minicomputer software. Many software tools are common to any MDS.

Executive programs (also called operating systems) control the interaction between the MDS peripherals and other software tools by keeping track of time, enforcing correct event sequencing, and controlling I/O functions. An operating system also provides user commands for editing, assembling, compiling, relocating, executing, and debugging the user-developed program from the control console. Some operating systems can perform file-management tasks on floppy or hard-disc memory. Other systems provide this capability in a separate software package called a "file-management system," or include it in the text editor.

Text editors, or simply editors, are programs that allow an

© IC MASTER 1984

operator to enter a source code (assembly or higher-level language) into the MDS memory through an interactive terminal with a keyboard. Through the editor the operator can add, delete, move, change, and display or list selected portions of the source program.

Assemblers are programs that convert source code generated with an editor to machine language (object or binary code). The source code is the assembly language (alphabetic symbols called mnemonics) of the processor for which the program is being written. Assemblers vary in their ability to handle macros (blocks of often-used instruction sequences activated by a single instruction), to generate relocatable code, and to allow certain pseudo-operations. The latter is an instruction that gives information to the assembler instead of causing machine code to be generated.

Compiler and interpreter programs translate high-level programming languages into machine language. Each approach has advantages and drawbacks. Both tools translate each high-level statement into a series of binary instructions. However, a compiler translates the entire program before execution can take place. On the other hand, an interpreter translates and immediately executes each high-level statement before proceeding to the next translation.

Interpreters are more efficient for making program changes since each instruction is executed as it is typed. Therefore, an instruction can be entered, executed, changed, and executed again without the need to exercise the rest of the program. With a compiler, each change requires a retranslation of the entire program.

Although interpreters require more memory than compilers and take more time to execute the final code, they usually provide better real-time error diagnostics. However, microprocessor applications seldom require extensive programmer interaction or program debugging. As a result, a compiler generally is preferred over interpreters for time-critical microprocessor programming applications, and an interpreter is recommended for intensive interfacing or debugging requirements. Many microprocessor development systems provide both tools for overall programming flexibility.

Linkers tie together program segments and subroutines of machine code to form the finished program. Linkers calculate all module address locations so they will interface properly with one another and fit into memory.

Debuggers interactively execute and debug the object program by allowing the programmer to set breakpoints in the routine, control program execution, and examine processor register and memory content. Combined with in-circuit emulators, debuggers also allow control-line and memory-content transfer between host and prototype systems, thereby controlling the degree of emulation. Most debuggers include single-stepping and program-trace capability.

High-Level Languages

Using high-level languages (HLLs) simplifies program coding and debugging since a single statement can be translated by an interpreter or compiler into its equivalent of 20 or more assembly-language statements. Moreover, HLL statements resemble natural English and thus are easily read, documented and understood. The result is high overall programming efficiency.

Although highly convenient for a programmer, using an HLL imposes a penalty. All of the object code statements that the compiler generates for each HIL statement may not be required for every application. Consequently, high-level programs are typically 15 to 20% longer than efficient assembly-language programs. The result is wasted memory space and computer time.

However, the trends toward higher microprocessor speeds and lower memory cost tend to minimize these disadvantages, which are further offset by high programming efficiencies. Moreover, compilers based on so-called implementation languages have assembler-like characteristics, allowing programming in both high-level and assembly languages. Thus a programmer can use an HLL to design the overall program, resorting to assembly language for coding time or space-critical functions, or for coding functions that the HLL is not designed to execute.

High-level language is an increasingly fundamental consideration for selecting an MDS, the more sophisticated of which support several HLLs. In general, an HLL for microprocessor applications should have several characteristics. Foremost of these is block structuring which allows several design teams to work independently on program modules of a large project.

The language should also allow assembly-coded modules to be integrated into the basic program; provide data and register-bit handling capability such as shift and rotate; provide logical operations such as AND, OR, NAND and NOR; provide access to I/O ports and handle interrupts in real time. Also, since microprocessors are not well-suited for computation, they usually require languages that use integer arithmetic instead of floating point or decimal. Available HLLs provide these characteristics in various combinations and degrees of effectiveness.

MICROPROCESSOR DEVELOPMENT SYSTEMS

Supported CPUs	Maximum No. of User Stations	Communication Ports		User RAM		Floppy Disk			Hard Disk	Logic Analyzer	PROM Programmer	Printer
		Serial	Parallel	Supplied (bytes)	Maximum Capacity (bytes)	No.	Size (in.)	Capacity (bytes)	Capacity (bytes)			
Z8001, Z8002	1	2	1	128		1		11M				
Bipolar Bit-Slice	1	3	1	32	64	2		512		Opt.		Opt.
AM2900 family	1	4	1	64				1M		Opt.		x
Std: 8080, 8085, Z80; opt: 8048, Z8000	1	3	1	32	64K	2		512		Opt.		Opt.
Std: Z8000; opt: Z8001, Z8002	1	2	1	64		2		1M				
Z8001, Z8002	1	2	1	128	10.5Mb		8					
All bit slice devices, both TTL and ECL	8	2				2	8				Opt.	Opt.
Z8001/2, 8086; 68000/10, 1610, 6500 Series, 8035/39/48/49, 8031/51, 146805E2, 1802/4/5, NSC800, 6800, 6809, 8085A, 8088, Z80A/B, 68008, 8X300/305												
Z80, Z80B, 8080, 8085, 6800, 6802, 6808, 6809, 6809E, 8035, 8039, 8040, 8048, 8059, 8050, 8748, 8749	1	1		64								
Z8001, Z8002, Z8003, 68000	1	2		64						Opt.		
8080	1	8		64		2		45				Opt.
8080	1	8		64		2		275				Opt.
6502	1	2		48		2	8				x	x
6502	1	2		48		2	5				x	x
4/40, 4/10, 4/30, 4/90, 4/95	8	16			64				300M		x	x
Z80/68000	6	Opt.			512	2	5¼	390			Opt.	Opt.
Z80/68000	6	Opt.			512	2	8				Opt.	Opt.
Z80	3	Opt.		512		2		390			Opt.	Opt.
Z80	6	Opt.			512	2	5¼				Opt.	Opt.

© IC MASTER 1984

MICROPROCESSOR DEVELOPMENT SYSTEMS

Software Support					
Standard	Optional	Comments	Model	Source	Line
AMDOS operating system compatible with CP/M 2.2; Macro ASM and Linkers for 8080, 8085, Z80. Z8001/2; editor, debugger.	RTE/8050 Real-time emulator for AMZ8001 or AMZ8002, C complier for AMZ8002, Pascal to C translator.	RTE16/8050 real-time emulator provides no-wait state emulation for AMZ8001 and AMZ8002. Emulation memory expandable to 264Kbytes. Real-time trace holds 25646-to 96-bit events. Expandable to 11Mb.	AMS7S8/8112	AMD	
CP/M-compatible disc operating system; Meta assembler; line-oriented editor, debuggers; self-test on power-up.	Real-time trace	Writable control store for microcoded emulation. Expandable to 1Mb; Centronix 702 or Teletype 40.	AMSYS/29	AMD	
AMDOS operating system compatible with CP/M2.2; AMDASM META assembler; DDT29 debugger.	29/6310 high-speed trace, 1Kx64 writeable control stores.	29/6310 provides 10-MHz real-time trace buffer of 256 x 48-bit; eight trigger registers for complex triggering.	**AMSYS29/10**	**AMD**	**(1428.1901)**
CP/M-compatible disc operating system, macroassemblers, translators, linking loaders, editors, debuggers; self-test on power-up.	Fortran, extended Basic, Pascal, Cobol 8085; Z80 macroassemblers.	Optional paper-tape reader/punch and Z8000 in-circuit emulator. Centronix 702 or Teletype 40.	AMSYS8/8	AMD	
CP/M-compatible disc operating system, macroassemblers, translators, linking loaders, editors, debuggers; self-test on power-up.	Pascal, C, Fortran and Basic; 8084 assembler.	Optional in-circuit emulation for 8080, Z80, 8085, 8048 family and 8014; four serial I/O lines optional; 10Mbyte cartridge disc optional. Expandable to 2Mb.	AMSYS8/8000 Series	AMD	5
CP/M compatible AMDOS8 operating system, relocatable macroassemblers for 8080A, 8085A, and Z80A. Z8000 software support, including a relocatable macroassembler, linker, and 8-bit to 16-bit source code translator.	RTE16/8050A, real-time emulator support package for Z8000.	Self-test diagnostics. Uses 4-MHz 8085A-2 CPU.	AMSYS8/8116	AMD	
Resident monitor, disk formatter, Meta assembler, debugger.	PROM programmers, bipolar.	Provides writable control store for microcoded emulation. Minimum clock cycle time is 60 ns. 256 word trace capability is standard in all systems.	EZ-PRO	AMA	
MS-DOS 2; cross assembler, linking editor, debugger	In-circuit emulators for a wide range of CPUs.	Connects to your personal computer via RS232.	**EZ-PROII**	**AMA**	**(1902)**
	Remote control and symbolic debug package for ISIS and CP/M operating systems.	Stand-alone in-circuit emulator. Real time trace: 32 bits wide, 256 traces deep with disassembly. Diagnostic functions: standard and user-defined for debugging hardware in design, test and service.	EM-SERIES	AppMicroSys	
		Stand-alone in-circuit emulator. Real time trace: 72 bits wide by 2048 deep.	ES-SERIES	AppMicroSys	10
Enhanced Micro-Soft Basic	Analog and digital I/O boards.	Laboratory development system for process control and data acquisition.	CS-450	Burr-Brown	
UCSD "p" system including Pascal and assembler	Analog and digital I/O boards.	Laboratory development system for process control and data acquisition.	CS460	Burr-Brown	
Editor, assembler.	Basic, Forth.	S100 mainframe readily convertible to Z80, 6802, 6809.	6502PDS-8'	CGRS	
Editor, assembler.	Basic, Forth.	S100 mainframe readily convertible to Z80, 6802, 6809.	6502PDS-Mini	CGRS	
RTX, OS4, operating system, Fortran, Cobol, Pascal, BCPL, Coral 66.			410,30,90	CompAuto	15
	CDOS or CROMIX operating system, macroassembler, "C" compiler, Cobol, Fortran 77, Pascal, Structured Basic.		CS-105E	Cromemco	
	CDOS or CROMIX operating system, macroassembler, "C" compiler, Cobol, Fortran 77, Pascal, Structured Basic.		CS-3D5E	Cromemco	
	CDOS or CROMIX operating system, macroassembler, Cobol, Fortran, Lisp, Structured Basic, Ratfor, data base management, Writemaster, Spellmaster, Planmaster, "C" compiler.	Capable of high-resolution graphics using SDI graphics interface and RGB monitor.	SystemOne	Cromemco	
	CDOS or CROMIX operating system, macroassembler, Cobol, Fortran, Lisp, Structured Basic, Ratfor, data base management, Writemaster, Spellmaster, Planmaster, "C" compiler.	Capable of high-resolution graphics using SDI graphics interface and RGB monitor.	Z-2H	Cromemco	

Bold face indicates additional data is provided on the page noted.

MICROPROCESSOR DEVELOPMENT SYSTEMS

Supported CPUs	Maximum No. of User Stations	Communication Ports		User RAM		Floppy Disk			Hard Disk	Logic Analyzer	PROM Programmer	Printer
		Serial	Parallel	Supplied (bytes)	Maximum Capacity (bytes)	No.	Size (in.)	Capacity (bytes)	Capacity (bytes)			
Z80	6	Opt.			512	2	5¼				Opt.	Opt.
Z80	6	Opt.			512	2	8				Opt.	Opt.
Z80, 8080	1	1-36		64		2	5¼	328				
MICRO/T-11 Upgradeable to MICRO/J-11	1	2		32	64							Opt.
8080	1	2		256		1		2M			x	x
8080	1	3		1Mb		1		2M			x	x
1802		2		16		2					Opt.	Opt.
68000, 68010, 8086, 8088, 8085, Z80A, Z80B, NSC800, 6809, 6502, 8048 family	1	2		128		2	8		40M	x	x	
68000, 68010, 8086, 8088, 8085, Z80A, Z80B, NSC800, 6809, 6502, 8048 family	15	1		128						x	x	
68000, 68010, 8086, 8088, 8085, Z80A, Z80B, NSC800, 6809, 6502, 8048 family	60	4								x	x	
F8, F3870, F6800, F9445, F16,000	1	2		128		2		1M			Opt.	Opt.
F3, F3870 family	1			16		2					Opt.	Opt.
9440, 9445	1	1		64		2	1¼					150
6802, 6808 or 6809	1	2	1	8								
68000	16	12	1M									
8080, 8085, 6800, Z80	6									Opt.	Opt.	Opt.
6801, 68701	1	1		6								
F9445 to clock speed of 24 MHz, 49-pin or chip-carrier probe, for 9445 socket	1	3	1		64							

© IC MASTER 1984

MICROPROCESSOR DEVELOPMENT SYSTEMS

Software Support					
Standard	Optional	Comments	Model	Source	Line
	CDOS or CROMIX operating system, macroassembler, Cobol, Fortran, Lisp, Structured Basic, Ratfor, data base management, Writemaster, Spellmaster, Planmaster, "C" compiler.	Capable of high-resolution graphics using SDI graphics interface and RGB monitor.	Z80System2	Cromemco	
	CDOS or CROMIX operating system, macroassembler, Cobol, Fortran, Lisp, Structured Basic, Ratfor, data base management, Writemaster, Spellmaster, Planmaster, "C" compiler.	Capable of high-resolution graphics using SDI graphics interface and RGB monitor.	Z80System3	Cromemco	
CPM operating system and macroassembler.	CyberForth Program Development Package with built-in drivers for I/O and communications boards; real-time, multitasking executive; floating point match module; cross compiler; tracer/debugger and structured assembler.	The CYKEY9990 has a 24 slot card cage that will accept any of over 40 Cyberbus digital I/O, analog I/O and communications boards.	CYKEY9990	Cybersys	
MDE software is supported on VAX/VMS RSZ-11M+ and RT-11 operating systems. MACRO/11 Symbolic Debugger. Support DEC command language standard. User-defined symbols.	Up to 2 memory simulators (1 standard). Up to 3 logic analyzer boards (1 standard).	MDE provides comprehensive real-time emulation of Digital's MICRO/T-11 functions in a target system before an actual microprocessor is configured in hardware.	MDE	DEC	
CPM/80, complete disk operating system with editor, assembler, debugger and utilities.	Fortran, Pascal, Basic, PL/I, "C", Cobol, PLMX; Cross-assemblers for all 8-bit microprocessors; multi-tasking operating system.	Hardware options include ½-inch magnetic tape, Winchester drive, in-circuit emulation, cassette tape, modem.	DCS/80	DistComp	5
Complete disk operating system with editor, assembler, debugger and utilities.	High-level language, Fortran, Cobol, Pascal, Basic, PL/I Cross-assemblers for all 8-bit microprocessors; multi-user, multi-tasking operating system.	Hardware options include ½-inch magnetic tape, Winchester drive, in-circuit emulation, cassette tape, modem.	DCS/86	DistComp	
MicroForth compiler, disk operating system, macroassembler, interactive debug, emulation string and line editor.		Self diagnostics, in-circuit emulator.	EiCOMPuMOS	DiversTech	
RT-11 operating system, macro-relocatable cross-assemblers, linker, symbolic debugger, screen-oriented editor, HELP files.	PASCAL and "C" cross-compilers for most processors. All standard DEC software options.	In-circuit emulation of all chips supported. Real-time trace captures all bus activity.	**ECL3211**	**Emulogic (1904)**	
RT-11 Operating system, macro-relocatable cross-assemblers, linker, symbolic debugger, screen-oriented editor, HELP files.	PASCAL and "C" cross-compilers for most processors. All standard DEC software options.	Multi-user system based on DEC PDP-11 family of host processors. Supports multiple ECL-3211 satellite software/hardware stations as well as standard VT100 software-only stations on host.	EMUNET-1	Emulogic	
RT-11 Operating system, macro-relocatable cross-assemblers, linker, symbolic debugger, screen-oriented editor, HELP files.	PASCAL and "C" cross-compilers for most processors.	Multi-user system based on DEC VAX-11/730, 11/750, and 11/780 host processors. Supports multiple ECL-3211 satellite software/hardware stations as well as standard VT100 software-only stations on host.	EMUNET-2	Emulogic	10
IMDOS multi-user disk operating system and Basic language packages.	Fortran, Pascal, Crossassemblers, PEPLINK, loaders, debugger, and EMUTRAC, control software for F8, F3870, F6800 and F16000 families.	Optional Real-Time Executive Operating System for multitasking in F9445-based systems. Optional video terminal, peripheral controller boards and I/O boards.	**FS-1**	**Fairchild (1906)**	
Assembler, editor, debug package.		Options: In-circuit emulator, PROM boards, communications boards, floppy disc interface.	Formulator Mark III	Fairchild	
Multitasking time-share oriented disc operating system; macroassembler, test editor, utilities, debuggers; real-time executive.		Peripherals purchased from independent vendors.	Microflame1	Fairchild	
ROM-based debugging monitor with utility routines and friendly prompts.		Six 8-bit parallel I/O ports with control signals. 50 thru 19.2K bps, independentally selectable, serial ports. 16 memory map configurations, switch selectable. Six sockets for ROM/PROM 2K, 4K or 8K types. Requires serial display terminal and 5V power. Asynchronous multibus compatible.	**PEP-68**	**Fairchild (1912)**	
UNIX, CP/M68	Fortran, Pascal, Cobol, Basic	Single-board UNIX System.	HK68	Heurikon	15
Operating system, editor, assemblers, relocating macroassemblers.	Assembler for 8080, 8085, 6800, Z80.	Processor emulation boards, emulation memory, disk units tape drives optional.	HP64000	HP	
Mnemonic debugger with on-line assembly, and EPROM programming support.	Macro-assemblers, linker, emulation package.	Software development and test station for 6801 programs. Programs UV EPROM version of 6801.	6801VICE	HiLevel	
Same as Model DS270. Breakpoints can be from data on the TRACE probes, or address.	Same as Model DS270. Downloads from Fairchild cross-assemblers.	Converts to DS270 figuration by changing cables, adding any needed WCS memory. Basic DP9445 has all DS270 specs except WCS width.	DP9445 EMULYZER	HiLevel	

Bold face indicates additional data is provided on the page noted.

MICROPROCESSOR DEVELOPMENT SYSTEMS

Supported CPUs	Maximum No. of User Stations	Communication Ports		User RAM		Floppy Disk			Hard Disk	Logic Analyzer	PROM Programmer	Printer
		Serial	Parallel	Supplied (bytes)	Maximum Capacity (bytes)	No.	Size (in.)	Capacity (bytes)	Capacity (bytes)			
CP1600/A, 1610, 60-pin probe for 1610 socket, runs full speed	1	3	1		64							
All bit slices, 2901, 2903, 29203, 29501, 29116, 8X300, 8X305, 74S481, 3000, and Macrologic. Also ECL10800, 100220. 1 to 4 WCS arrays.	1	3	1	1	64							
All bit slices, 2901, 2903, 29203, 29501, 29116, 8X300, 8X305, 74S481, 3000, and macrologic. Also ECL10800, 10220. 1 to 4 WCS arrays.	1	3	1	64	160					x	x	x
All bit slices, 2901, 2903, 29203, 29501, 29116, 8X300, 8X305, 74S481, 3000, and macrologic. Also ECL10800, 10220. 1 to 4 WCS arrays.	1	3	1	64	256	2	5¼	700K	10M	x	x	x
All bit slices, 2901, 2903, 29203, 29501, 29116, 8X300, 8X305, 74S481, 3000, and Macrologic. Also ECL10800, 100220. 1 to 4 WCS arrays.	1	4				21	5¼					
DEC, LSI-11, Zilog, Z80, Motorola, 6809	1	Var.	Var.								x	
8080A, 8085A, 8086 (iAPX86), 8088 (iAPX88), 8089, 8021, 8022, 8041A, 8741A, 8035, 8048, 8748, 8039, 8049, 8051	1	2	4		64			250	7.3M		Opt.	
8080A, 8085A, 8086 (iAPX86), 8088 (iAPX88), 8089, 8021, 8022, 8041A, 8741A, 8035, 8048, 8748, 8039, 8049, 8051	1	2	4			1		250			Opt.	Opt.
8080A, 8085A, 8086 (iAPX86), 8088 (iAPX88), 8089, 8021, 8022, 8041A, 8741A, 8035, 8048, 8748, 8039, 8049, 8051	8	2	4								Opt.	Opt.
Work station dependent	8	1	2	256		2						Opt.
MCS-86, MCS-85, MCS-80 and MCS-48 families	1				64			250			Opt.	Opt.
8080, 8085, 8088, 8048, 8051, all 8-bit Intel microprocessors or microcontrollers	1	2			64						Opt.	
8086, 8087, 8088, 8085, 8080, 68000, 6809, 6809E, 6802, 6502, 6507, Z8002, Z8002, Z80B, NSC-800, 6510, 65C02, 80C85, 68008, 80C86, 68010, 80186	8	2	1	64		2						Opt.
8086, 8087, 8088, 8085, 8080, 68000, 6809, 6809E, 6502, 6507, Z80B, Z8001, Z8002, NSC-800, 80186, 6510, 65C02, 65802, 80C85, 80C87, 80188, 68008, 68010	8	4	1	256		2						Opt.
8080, 8085, Z80, 6809, 6809E, 6502 series 8084, 8086, 68000, Z8001, Z8002	1	4		1M		2	5¼					Opt.
8080, 8085, Z80, 6809, 6809E, 6502 series 8084, 8086, 68000, Z8001, Z8002	8	4		256		2	5¼					Opt.

© IC MASTER 1984

MICROPROCESSOR DEVELOPMENT SYSTEMS

Software Support					
Standard	Optional	Comments	Model	Source	Line
Same as Model DS270. Model programs for host to download, run, get TRACE upload as feedback.	Same as Model DS270. Downloads from General Instrument cross-assembler.	Converts to full DS270 or DP9445 by changing cables, adding any needed WCS memory. Basic DP1610 has all DS270 specs except WCS width.	DS1610 EMULYZER	HiLevel	
MENU Prompts: Editing, Target Control, Remote operation, Display formatter, Diagnostics, Download models, TRACE dump, Multiple arrays.	Universal meta-assembler for up to 128-bit words, full cross-references, MACRO's, Fortran IV compativle, or CP/M version.	Menus and prompts, histogram or WCS address frequency. Compatible with any assembler, BSO, TMI, MICROTEC. Trace has nesting and data break, search and dump, 8192 breakpoints.	DS270 EMULYZER	HiLevel	
MENU Prompts: Editing, Target Control, Remote operation, display formatter, diagnostics, download models, TRACE dump, multiple arrays.	Universal meta-assembler up to 80 bits, MACRO's FORTRAN IV compatible or CP/M version.	Performance analysis measures target activity in 16 user categories. TRACE has 16-level Trigger logic.	DS370	HiLevel	
UNIX time-sharing operating system, PASCAL, Fortran, "C", editor, debugger, word processor, utilities. Built-in diagnostic tests plus DS370 features.	Upgrade of DS270. Adds ability to do fast assemblies on built-in host.	Same as DS270.	DS470	HiLevel	
UNIX time-sharing op system, Pascal, Fortran, "C", Editor, Debugger, Word Processor, utilities. Built-in diagnostic tests, plus OS370 features.	Upgrade of DS370. Adds the ability to do fast assemblies on the built-in 68000 host. Multi-user up to 4.	Performance analysis, measures target activity in 16 user categories. TRACE has 16-level trigger logic. Superset of DS370 in all ways. CRT menus have help feature.	DS570 EMULYZER	HiLevel	5
Realtime executive, HLL, operating system, editor assembler.		Sphere is a target-resident realtime multitasking programming environment which makes your single board computer into a single board development system.	SPHERE	Infosphere	
ISIS 11 disk operating system; ASM-80 macroassembler for 8080, 8085; credit editor; link and locate utilities.	PL/M-80, Fortran, Pascal, Basic, Cobol, Utilities FSP arithmetic package for 8080 and 8085; AMS-86 macroassembler, PL/M-86, link and locate utilities for 8086; assemblers for 8048 and 8089.	In-circuit emulators for all CPUs.	INTELLEC11-MODEL245	Intel	
ISIS operating system, credit full screen copier, macroassembler for 8086/88 and 8080/85, linker and loader, debug-86 debugger.	Pascal, Fortran, PL/M, Cobol, Basic, assemblers for 8089, 8048, 8051 families, utility packages for 8080/85/86/87/88/89 support mainframe link software.		IntellecIII	Intel	
ISIS operating system at workstations, MDS-I operating system at network manager.		Network manager provides shared hard disk and printer spooling for use by up to 8 stations.	NDS-I	Intel	
High level language debugging network, management tools, export/import software, Ethernet Protocall.		Network resource manager provides shared Winchester hard disc, Model 740 cartridge disks and spooled line printer interface for work stations. All existing Intel development systems can be upgraded to be NDS-II work stations. Work stations communicate with the network resource manager via 10M bit Ethernet or local net interconnected with coax.	NDS-II	Intel	10
ISIS-11 disk operating system with relocating macroassembler, linker, locater, and CRT-based CREDIT editor.	iPDS-FTRANS option enables file transfer between iPDS and any Intellec Development System. PL/M, Fortran, Basic, Pascal and Cobol software packages available.	Self-test diagnostic capability, built-in interfaces for high-speed paper tape reader/punch, printer and universal PROM programmer. iMDX557, iAPX resident processor card package is available to upgrade existing iMDX225 series II Development System to Series III. This package supports development of iAPX86/88 processors.	iMDX225	Intel	
ISIS-PDS disk operating system with relocating macroassembler, and CRT-based editor.	CP/M operating system on disc. Fortran/80, PL/M80, PL/M88/86 and Basic. Multiprocessor emulator functions.	Portable, dual processing capability, expandable using multimodule cards. Bubble memory option.	iPDS	Intel	
UDOS operating system, editor, macro assemblers emulation support, mainframe link.	Basic, Pascal compilers for development.	Simultaneous multi-position emulation.	2300	Kontron	
CP/M operating system, macro assembler, editor linker, emulation support, mainframe link.	Pascal for system programming; PASCAL compiler for development; 3rd party CP/M software. (Basic, Fortran, C)	Ergonomic terminal, distributed computing and central mass storage for multi-users, multi-processor emulation.	KDS	Kontron	
UNIX Berkley System 3 operating system.	Pascal Compilers, Cross assemblers, symbolic debug for emulators.	KDS980 is convertible to KDS968.	KDS-968	Kontron	15
CP/M operating system, editor utilities (MP/M, CP/Net for multiuser).	Pascal Compilers, Cross assemblers, symbolic debug for emulators.		KOS-980	Kontron	

Bold face indicates additional data is provided on the page noted.

MICROPROCESSOR DEVELOPMENT SYSTEMS

Supported CPUs	Maximum No. of User Stations	Communication Ports		User RAM		Floppy Disk			Hard Disk	Logic Analyzer	PROM Programmer	Printer
		Serial	Parallel	Supplied (bytes)	Maximum Capacity (bytes)	No.	Size (in.)	Capacity (bytes)	Capacity (bytes)			
8089, Z80	1	2		64		2	8					x
8080, Z80	1	5	1	80		2	8					x
6800 or 6809. Opt. 6801, 6802, 6805, 146805, 3870, 141000	1	1	2	64							Opt.	
M6800, M6801, M6805, M6809. Optional hardware for M6805/M146805 families	1	1		56				328			Opt.	Opt.
M6805P2, P3, P4, R2, R3, U2, U3, T2, M146805E2, F2, G2	1	1	1	8								
MC68000	1	1	1	32	256						In host.	
MC68000, 68010, 6800, 6809, 6802, 6805, 146805, 6801, 68120	2	2		256						Opt.	Opt.	Opt.
COP400 Series, NS455	1	3								Opt.	In host CPU	
8080, 8085, 8048, 3049, 3050, 3070, Z8	1			64		2		512			Opt.	
NSC800, INS8070, INS8048, INS80C48, 8080, 8085, Z80, COP400	1	2		128		2					Opt.	Opt.
68000		2	2	128		1						
Z80-A	1	3	1	64		2	5¼	400			x	Opt.
Z80, NMOS		3	8	16	65	2		512		Opt.	x	x
1802, 1804	1	1		60		2		512		Opt.	x	x
1802, 1804, 1805, 1806, 6805C	1	1		4	40	1				Opt.	Opt.	x
1802, 1804, 1805, 1806, 6805C	1	1		4		2				Opt.	x	x
1802	1	1		4	32	2				Opt.	x	
1802, 1804, 1805, 1806, 6805C, 6800, 6801/02/03/08/09	1	1		60		2	3½	736		Opt.	Opt.	x
Z80	1	1	1	64		2	3½	645		Opt.	Opt.	
Z80A, B, C, L; NSC800, 80C85, Z80C and 808T In-Circuit Emulators	1	4	2		256						Opt.	Opt.

© IC MASTER 1984

MICROPROCESSOR DEVELOPMENT SYSTEMS

Software Support					
Standard	Optional	Comments	Model	Source	Line
CP/M 2.2	XY Basic, Microsoft Basic, Pascal/M, Z-SID, MAC, 32 or floating point APU. Any CP/M compatible.	Includes power supply, 7-slot multibus chassis, MSC-8009A Z80 CPU, 64K byte RAM, up to 32K EPROM, floppy disk controller, two Shugart 801R disk drives.	MSC8801	MonSys	
CP/M 2.2	CP/NET, MP/M, XY Basic, Microsoft Basic, Pascal/M, Z-SID, MAC, 32 or 64 floating point APU, 8-inch Winchester drive package. Any CP.M comp	Includes power supply, 7-slot multibus chassis, up to 32K EPROM, floppy disk controller, two Shugart 801R disk drives. MSC-8009, Z80 CPU, 16K RAM; MSC8007A, Z80 CPU, 64K RAM.	MSC8802	MonSys	
MDOS disk operating system, macroassembler with linking and loading editor, cross-assemblers, cross-simulators available for each MPU.	Fortran, Cobol, Basic, MPL, Pascal.	Optional real-time trace. EXORterm 155 adds video display and keyboard entry capabilities to the basic EXORciser. Centronix 702, 703.	**EXORciser**	**Motorola (1923)**	
XDOS operating system, linking loader, CRTeditor, Basic-M, compiler/interpreter, Basic-M run-time package, disk resident.	Pascal, Setcom (serial communications).	EXORset fills the gap existing between very low-cost evaluation kits and high-end EXORciser-based systems.	EXORsetDS35	Motorola	
In host.		Operates as a remote hardware/software development station to a host such as EXORmacs, EXORset, EXORciser.	**HDS-200**	**Motorola (1919)**	5
Operates as a remote hardware/software development station to a host such as EXORmacs, EXORset, EXORciser.			**HDS-400**	**Motorola (1918)**	
VERSAdos multiasking, real-time, multiuser, logical I/O file management; Pascal compiler; macro and linking assembler; page, screen and file-oriented editor, symbolic debugger.	Fortran IV.	Optional real-time trace; ROM, RAM and disk autotest at power-on; board-level fault isolation.	**M68000 (EXORmacs)**	**Motorola (1915)**	
Microcontroller On Line Emulator; consists of a host COU, a MOLE Brain Board, and a MOLE Personality board.			**MOLE**	**National (1926)**	
Disk operating system; Fortran compiler; Basic interpreter; on-board ROM diagnostics, utilities.	Text editor, cross-assemblers.	Optional in-circuit emulators for 8048, Z80; personality modules; Starplex-to-Intel MDS link.	STARPLEX	National	
Disk-based operating system, debugger, text editor, assembler, linker, Fortran, Basic, utilities and diagnostics.	PL/M, Pascal.	Starplex II support packages are identical to those of Starplex.	STARPLEXII	National	10
OB68KMACS (MACSBUG monitor debugger).		Whitesmiths-Idris Forth, Inc-Poly Forth 32, Hemenway-MSP.	OB68K/SYS	Omnibyte	
CP/M 2.2 disk operating system with Quay utilities.	⅝ converter cable for 8" drive IBM 3740 format compatibility. Number of Developmental and Applications software packages available.	Packaged system with CRT/terminal included.	500T	Quay	
Monitor; including display & alter memory contents, dynamic breakpoints with register dumps, program countertracts single stepper and PROM programming.	Basic, Cobol, Fortran, CP/M operating system, assembler, text editor.		99/94FMWS	Quay	
Disk operating system, Level I and Level II, Macroassembler, Full Screen Editor.	Basic 1—Fixed Point Interpreter/Compiler Basic 2—Floating Point Interpreter PLM compiler.		CDP18S008	RCA	
System monitor and floating point Basic interpreter firmware.	System expandable in memory and I/O using any CDP18600 series microboard. Optional 1802, 1804, 6805C ROM-based Assemblers.		CDP18S693	RCA	15
System monitor, floating point Basic interpreter, 1802 assembler/text editor firmware. Cassette based PROM programmer software.	Same as CDP18S693.		CDP18S694	RCA	
ROM-Based Floating Point Basic interpreter, Level I 1802 assembler, text editor, System utility ROM, PROM Programmer Software (Cassette).	Video interface System (Interpreter Cassette).	System includes 10" color monitor and keyboard. System software display is color-coded. System is expandable using RCA Microboards.	CDP18S695	RCA	
Microdos operating system, macroassembler, utilities, 1800 series assemblers.	Full-screen editor; 6805C Assembler; Basic 1 fixed point interpreter/compiler; Basic 2 floating point interpreter; PLM 1800 compiler; micro concurrent Pascal compiler/interpreter (cross-software).	Microemulator, real-time in-circuit emulator, supports emulation of 1802, 1804, 1805, 1806, 6805C and future 8/16 bit micros. Requires user provided terminal or above microemulator.	MS2000	RCA	
TPM operating system (CP/M 2.2 compatible) Z-80 Macroassembler lingage editor, Debugger, monitor, Firmware.	Basic, micro-concurrent, Pascal.		MS2000-Z	RCA	
ROS operating system, self-test, file management, utilities, editor, assembler, linker, locator and communications link.	Relocatable assemblers	Universal development station, hardware/-software, emulator/development system. Ports: (4) RS232C, GPIB, Centronics; Portable	IceboxA	RELMS	20

Bold face indicates additional data is provided on the page noted.

MICROPROCESSOR DEVELOPMENT SYSTEMS

Supported CPUs	Maximum No. of User Stations	Communication Ports		User RAM		Floppy Disk			Hard Disk	Logic Analyzer	PROM Programmer	Printer
		Serial	Parallel	Supplied (bytes)	Maximum Capacity (bytes)	No.	Size (in.)	Capacity (bytes)	Capacity (bytes)			
Z80A, B, C, L; NSC800, 80C85, Z80C, 8085	1	2			256						Opt.	Opt.
Add-on In-Circuit Emulator for Intel development systems.	x				x			x	x			
6500 family.	1	2		16		2					Opt.	x
MM75, MM76EL, MM78, MM78L, MM78LA, MM78LS	1	1		16		2	5¼				x	
R6502, R6512, R6500/1, R6500/11, R6500/12, R6500/13	1	2		16	56	2	5¼				x	
6802	1	2	1	61.5		2	8				Opt.	
6809	1	2	1			2	8					
68000	1	2		256		1	5¼					
68000, 8, 10, MHz	1	4		64								
6500	1			4								
Z8, 6500	1	3	2	2		2	8				Opt.	
Z8	1	3	2	4		2	5¼				Opt.	
8080A, 8085A, Z80A, 1802, 6800, 6802, 0900, F8, 3870, 3872, 8048, 8049, 8021, 8035, 8039-6, 8086/88, Z800	1			32		1		630		Opt.	Opt.	Opt.
8086, 8085A, 8080A, 8048, 8049, 8035, 8039, 8021, 8041A, 8022, 6800, 68000, 6802, 6808, Z8000, Z80A	1	2		128						Opt.	Opt.	Opt.
8086, 8085A, 8080A, 8048, 8049, 8035, 8039, 8021, 8041A, 8022, 6800, 68000, 6802, 6808, F8, 3870, 3872, 3874, 3876, Z8001, Z8002, Z80A, TMS9900, SBP9900, 1802, 6500/1	1	2		128		2				Opt.	Opt.	Opt.
9900 family	1			64		2		480		Opt.	Opt.	Opt.
TMS9900	1			64		2	8			x	Opt.	Opt.
Any 1 of the following: TMS9900/9900-40, TMS9980/9981, TMS9940, TMS7000, SBP9900	2			256					9.4M	x	x	x
Any 2 of the following: TMS9900/9900-40, TMS9980/9981, TMS9940, TMS7000, SBP9900	4			256					32M	x	x	x
Any 4 of the following: TMS9900/9900-40, TMS9980/9981, TMS9940, TMS7000, SBP9900	8			320					96M	x	x	x
6800, 6801, 6805, 6809	1	1		56		2	8	512K			Opt.	Opt.

© IC MASTER 1984

MICROPROCESSOR DEVELOPMENT SYSTEMS

Software Support					
Standard	Optional	Comments	Model	Source	Line
ROS operating system, self-test, file management, utilities	Relocatable assemblers, editor, linker, locator	Ports: (2) RS232C, Centronics. Communications links available for VAX, Intel and CP/M systems. Portable, universal.	IceboxT	RELMS	
Relocatable Macro cross-assembler, operating system diskette.	Relocatable Macro cross-assemblers: Z80, Z8, Z8000, 6800/01/02, 6500/01/02, 1802/05, NSC800, 9900/95 F8/3870/72, 8051, 8080/85, 6805/146805, 6809, 68000	Doubles assembly speed of Intellec	SPICE	RELMS	
Text editor, two-pass assembler, debugger/monitor in ROM.	PL/65 compiler.	Single step, real-time TRACE; software breakpoints; operational in-circuit emulator.	6500	Rockwell	
Assemblers, Debug.			PPS4/1	Rockwell	
Assembler, debug Basic PL/65.	ACIA Module 16K RAM, Module In-system Emulator R6502, R6500/1, R6500/*, R6512.		SYSTEM65	Rockwell	5
Flex disk operating system. Programming is done in assembly language.	Basic, Pascal, Forth.	Provides 7 additional slots for expansion with Modulas One modules. Select from 25 modules.	802	SBE	
AS04, Flex.			809	SBE	
Probug, bootstrap monitor	CPM68K Regulus (UNIV Compatible).	5 spare Multibus Slots.	PDS-100	SBE	
Upload/download software transfers files in Motorola S-record format between host computer, the UWS, and target systems under development.	Signetics S68000 Macro Assembler, Signetics Pascal Cross Compiler, Signetics C Compiler.	Firmware includes debugger with assembler/disassembler, 10 concurrent breakpoints, software trace, memory register data modification, error diagnostics, 3 operating modes; host internal and external for real-time target emulation.	**SMDEV10000**	**Signetics**	**(1930)**
Monitor with debug, assembler/editor in ROM.	Floating-point Basic.	Hardware compatible with EXORciser bus.	MDT-1000	Synertek	10
Pascal-based operating system with screen-oriented editor and file-management system; universal assembler with macro and conditional directives; ROM-based mini-debugger.	Debug cards with 4 breakpoint registers; assemblers for 6800, 6809, Z80, 8080, 9900 and LSI-11.	ROM-based RAM/disk diagnostics.	MDT-2000	Synertek	
Osborne 1 Personal Computer, Z8 assembler/disassembler, text editor, debugger on disk.	Z8S software	Real time in-situ emulation; execution from/to any instruction addresses; optional 2Kx32/40 bit real-time trace with forward and backward display.	MDT20	Synertek	
Disk operating system; text editor, assembler, debuggers; file utilities; linker supervision.	Assembler for all MPUs; debuggers for 8086, Z8000, 68000; HHL for 8080, 8085, Z80, 6800; MDL/U compiler.	Extension English diagnostics; optional TTY, CRT, computer display terminals.	8002A	Tektronix	
OS/40 ROM-based operating system; communications firmware; simulated I/O support.	Assemblies/compiles performed on host.	Optional emulator processors and prototype control probes; system designed as a peripheral for a host system.	8540	Tektronix	
DOS/SO disc based operating system; line-oriented editor; macro assembler with English language diagnostics; linker supervision; communications S/W; simulated I/O support.	Optional emulator processors and prototype control probes; ROM-based powerup systems test; real-time trace.		8550	Tektronix	15
Disc operating system; assembler, text editor, linking editor, file-management utilities.	Pascal, Basic, Fortran.	Optional in-circuit emulator for 9900/9980 and 9940.	FS990/10	TI	
9000 AMPLUS includes: 9900 family assembler, 9900 family linker, screen editor system, AMPL debug high level language, AMPL debug procedure library, disk directory and file utilities, PROM programmer utilities	Microprocessor, Pascal, TMS7000 Assembler, linker and PROM utilities, TMS7000 AMPL Emulator utilities, TMS9995 and TMS9900 Assembler, real time. Executive, file manager, HDLC data communications.	88 key typewriter style keyboard. 12 inch (diagonal) CRT with 80 character line x 24 line capability. One terminal included.	TMAM9000	TI	
Multi-Amplus operating system, macroassembler, AMPL Utility, Diagnostic, Text, Link editor, and PROM Programming Utility.	Microprocessor Pascal, Memory-Mapped Pascal, Realtime Executive, and File Manager.	88 key typewriter style keyboard. 12 inch (diagonal) CRT with 8 character line x 24 lines capacity. Multiprocessor emulation, multitask operation. One terminals included.	TMAM9010	TI	
Multi-Amplus operating system, macroassembler, AMPL Utility, Diagnostic, Text, Link editor, and PROM Programming Utility.	Microprocessor Pascal, Memory-Mapped Pascal, Realtime Executive, and File Manager.	88 key typewriter style keyboard. 12 inch (diagonal) CRT with 8 character line x 24 lines capacity. Multiprocessor emulation, multitask operation. Two terminals included.	TMAM9021	TI	
Multi-Amplus operating system, macroassembler, AMPL Utility, Diagnostic, Text, Link editor, and PROM Programming Utility.	Microprocessor Pascal, Memory-Mapped Pascal, Realtime Executive, and File Manager.	88 key typewriter style keyboard. 12 inch (diagonal) CRT with 8 character line x 24 lines capacity. Multiprocessor emulation, multitask operation. Four terminals included.	TMAM9041	TI	20
WIZRD Multi-Tasking Disk Operating System, editor, assembler, file utilities, 16K Basic, small-C compiler.	Macro-assemblers, linker, C-compiler, device driver loader, downloader, profiler, disk patch, UCSD p-System with Pascal and FORTRAN.	Optional peripheral interfaces include parallel, analog and IEEE-488. Can be used as software development system or turnkey system.	Sprint68	Wintek	

Bold face indicates additional data is provided on the page noted.

MICROPROCESSOR DEVELOPMENT SYSTEMS

Supported CPUs	Maximum No. of User Stations	Communication Ports		User RAM		Floppy Disk			Hard Disk	Logic Analyzer	PROM Programmer	Printer
		Serial	Parallel	Supplied (bytes)	Maximum Capacity (bytes)	No.	Size (in.)	Capacity (bytes)	Capacity (bytes)			
Z8000, Z80, Z8	8 to 24	eight RS232C	one	256	1Mb				36M	Opt.		Opt.
Z8000, Z80, Z8	8 to 24	eight RS232C	one	1Mb	4Mb				128M	Opt.		Opt.
Z8000, Z80, Z8	8 to 24	eight RS232C	one	1Mb	4Mb				320M	Opt.		Opt.
Z8000, Z80, Z8	1			64					10M	Opt.	Opt.	Opt.
Z80, Z80A	1	x		64		2			300			

© IC MASTER 1984

MICROPROCESSOR DEVELOPMENT SYSTEMS

Software Support					
Standard	Optional	Comments	Model	Source	Line
ZEUS description incl., C, Assembler	Fortran, Cobol, Basic	Expandable system; optional in-circuit emulators; ZSCAN family, EMS8000	Model11	Zilog	
ZEUS description incl., C, Assembler	Fortran, Cobol, Basic	Expandable system; optional in-circuit emulators; ZSCAN family, EMS8000	Model21	Zilog	
ZEUS description incl., C, Assembler	Fortran, Cobol, Basic	Expandable system; optional in-circuit emulators; ZSCAN family, EMS8000	Model31	Zilog	
RID operating system; disk file management; Z8000 PLZ/ASM assembler, Z80/Z8000 translator; Z80 relocating assembler, text editor; monitor.	Z80 PLZ, Z8 software.	Expandable system; optional in-circuit emulator.	PDS8000 MODEL30	Zilog	
Operating system, file manager, editor, macroassembler.			ZDS-1/40	Zilog	5

Bold face indicates additional data is provided on the page noted.

Integrated Circuits Magazine
The magazine for the engineering design strategist*

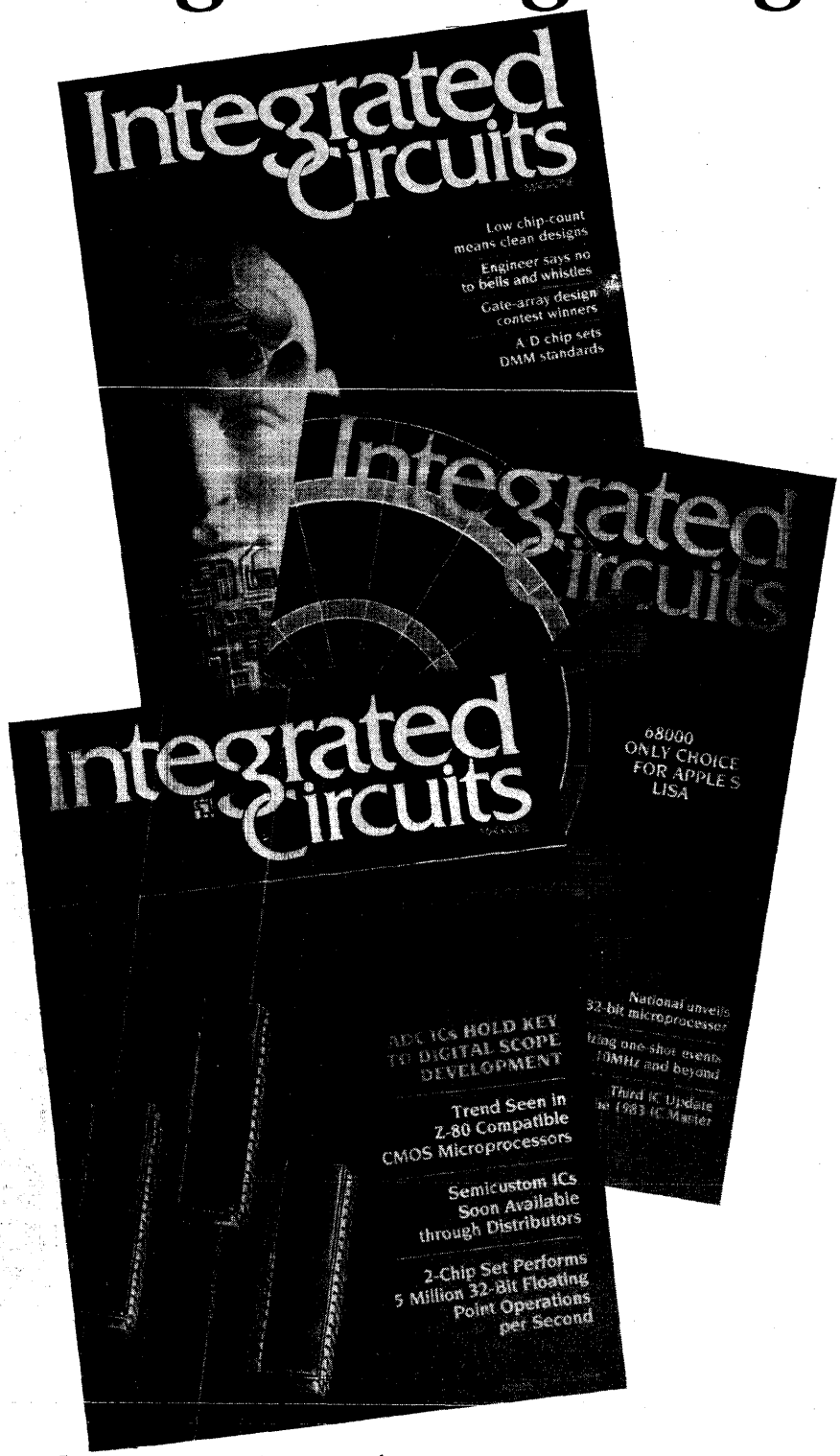

Integrated Circuits Magazine is the only publication written for senior design engineers and engineering managers who specialize in the specifying and use of ICs and related components in the design of instruments, equipment and systems.

It is unique in that it concentrates on reporting *from the viewpoint of the user.*

Each issue of *Integrated Circuits Magazine* includes staff-written interviews with leading designers at major IC customers, as well as articles written by IC users themselves.

Regular features include: IC User Feedback Reports, Semicustom Design Techniques, IC Design Problems and Solutions. What's New in ICs, and much more.

To receive *Integrated Circuits Magazine* absolutely FREE† simply give us your authorization right now! Just fill out, sign, date and return the subscription card located inside the back cover of Volume I.

Card missing? Additional subscription cards available from publisher upon request.

Integrated Circuits Magazine is designed for *YOU.*

**Designers who must keep pace with contemporary engineering design techniques, practices and trends, and how they affect the selection and application of integrated circuits, microcomputers, boards, and systems.*

†Integrated Circuits Magazine is made available on a complimentary basis to those qualified recipients within the United States only.

Canadian and Foreign Subscriptions are available, prepaid by check or money order payable in United States currency, at the following rates: $35.00 per year Canadian/Foreign; $55.00 per year Foreign via Air Mail; $18.00 per year non-qualified Domestic United States.

Integrated Circuits Magazine
Circulation Department
645 Stewart Ave.
Garden City, NY 11530
(516) 222-2500
TWX: 510-222-1673

Advanced Micro Devices

MICROPROCESSOR DEVELOPMENT SYSTEMS

AmSYS™ 29/10
Microprogram/Bit Slice Development System

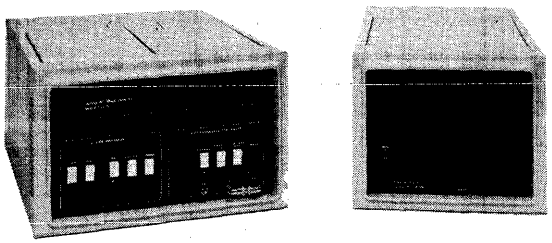

Features

- ☐ Complete floppy-disk based Microprogram/Bit Slice Development System
- ☐ AMDASM meta-assembler for microcode language definition and source file assembly
- ☐ Full speed (10MHz) Microprogrammed Controller for microcode and hardware integration
- ☐ Higher speed (35ns) writable control store for real-time microcode emulation
- ☐ Optional High-Speed Trace provides integrated 10MHz logic state analyzer with 48-bit input
- ☐ AMDOS29 disk operating system (CP/M† 2.2 compatible)
- ☐ Dual single/double density floppy disk system provides 1M byte storage

†CP/M is a trademark of Digital Research

Am29/6310
High-Speed Trace

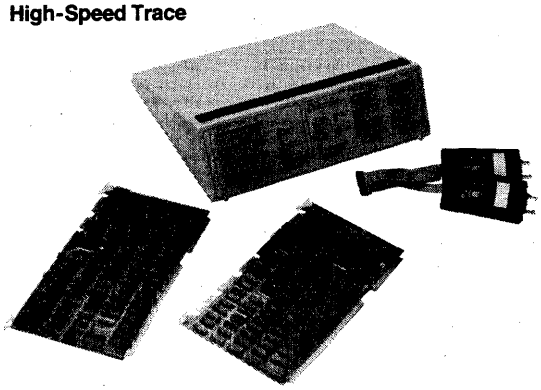

Features

- ☐ Provides logic analyzer capability for 2900 Family bipolar designs
- ☐ Plugs into AmSYS™29/10 Microprogram Development System
- ☐ 10MHz (100nsec) event storage capability
- ☐ Event storage unit of 48 x 256 words, expandable to 96 bits
- ☐ 32-bit Trace Time Tag records event occurrence time
- ☐ Eight general purpose 48-bit triggers, expandable to 96 bits
- ☐ Adds eight hardware breakpoints to AmSYS29/10 clock control logic
- ☐ Software integrated with microprogram debug software (DDT29) on AmSYS29/10

© IC MASTER 1984

EZ-PRO II + IBM PC = WINNER

EZ-PRO II
brings you exceptional microprocessor development capability at modest cost.

Start with IBM. EZ-PRO II is a development station which connects to your personal computer via RS232. Use MS-DOS™ 2.0 and the IBM editor to generate source code and EZ-PRO II supplies the rest.

Bundled Software. Each In-Circuit Emulator comes equipped with the appropriate cross assembler, linking editor and debugger which operate on your PC.

Emulators. EZ-PRO systems offer the widest choice of transparent in-circuit emulators available from any single source. Check the chart and see.

Modest Cost. The EZ-PRO II Development Station costs only $3,995 and emulators range in price from $1,395 to $3,395. For example, the 12.5 MHZ 68000/8/10 emulator is $3,395 and the 2 MHZ 6809/9E is $1,395.

PROCESSORS SUPPORTED
16 BITS Z8001/2, 8086, 68000/10
10 BITS 1610
8 BITS NMOS & CMOS 6502/3/4/5/6/7/12/13/14/15 8035/39/48/49 8031/51
8 BITS CMOS 146805E2, 1802/5/6, NSC800
8 BITS NMOS 6800/2/8, 6809/9E, 8085A/A-2, 8088, Z80A/B, 68008
8 BITS BIPOLAR 8X300/305

American Automation,
14731 Franklin Avenue
Tustin, California 92680 (714) 731-1661
Telex II: 910-595-2670
AMAUTO TSTN

American Automation

Prices subject to change without notice.
IBM is a trademark of International Business Machines, Inc.
MS-DOS is a trademark of Microsoft Corporation.

© IC MASTER 1984

ABBREVIATIONS OF COMPANY NAMES

Action Ins	Action Instruments
AD	Analog Devices
ADT	Advanced Digital Technology
Advent	Advent Products, Inc.
Alphatron	Alphatron
AMA	American Automation
AMD	Advanced Micro Devices
AMI	American Microsystems, Inc.
Amperex	Amperex Electronic Corp.
Analogic	Analogic
Analog Sys	Analog Systems
APC	Applied Micro Circuits
Apex	Apex Microtechnology
APM	Applied Microsystems Corp.
Appl Sys	Applied Systems Corp.
APT	Applied Microtechnology
Aptek	Aptek Microsystems
Array Tech	Array Technology
AWI	AWI Electronics
Barvon	Barvon Research
Bedford	Bedford Computer Systems Inc.
Burr-Brown	Burr-Brown
CAE	Computer Aided Engineering
Cal Devices	California Devices
Cermetek	Cermetek
CGRS	CGRS Microtech Inc.
Cherry	Cherry Semiconductor
CIC	Custom Integrated Circuits
CirTech	Circuit Technology
Citel	Citel
Comlinear	Comlinear Corporation
CMA	Custom MOS Arrays
Comark	Comark Corp.
Comdial	Comdial Semiconductor
Comp Auto	Computer Automation
Compas	Compas Microsystems
Cont Logic	Control Logic Inc.
Control Sys	Control Systems Microsystems Div.
CreMicro	Creative Micro Systems
Cromemco	Cromemco, Inc.
Cubit	Cubit Inc.
Curtis	Curtis Electro Devices, Inc.
Cybernetic	Cybernetic Micro Systems
Cybersys	Cybersystems
Cybertek	Cybertek Inc.
Data General	Data General
Data I/O	Data I/O
Data Trans	Data Translation
Datel	Datel
Datricon	Datricon Corporation
DDC	Data Devices Corporation
DEC	Digital Equipment Corporation
Die-Tech	Die-Tech
Digelec	Digelec Corp.
Digitek	Digitek, Inc.
Dionics	Dionics Inc.
Dist Comp	Distributed Computer Systems
Divers Tech	Diversified Technology
E-HI	E-H International, Inc.
EDI	Electronic Designs Inc.
Elind	Elind Elettronica Industriale
EMM-SESCO	EEM-SESCO
Emulogic	Emulogic Inc.
ETI Micro	ETI Micro
Exar	Exar Integrated Systems
Exel	Exel Microelectronics
Fairchild	Fairchild
Ferranti	Ferranti Electric
Force	Force Computers
Fujitsu A	Fujitsu America
Fujitsu	Fujitsu Microelectronics, Inc.
GI	General Instrument
GTE Micro	GTE Microcircuits
Harris	Harris Semiconductor
Heurikon	Heurikon Corp.
Hilevel	Hilevel Technology, Inc.
Hitachi	Hitachi America, Ltd.
Holt	Holt Inc.
HP	Hewlett-Packard
Hughes	Hughes Aircraft, Solid State Products
Hybrid Sys	Hybrid Systems
HyComp	HyComp
ICC	International Cybernetics
IDT	Integrated Device Technology
IMI	International Microcircuits, Inc.
IMP	International Microelectronic Products
IMS	Industrial MicroSystems Inc.
Infosphere	Infosphere
Inmos	Inmos
IntCirEng	Integrated Circuit Engineering
IntCirSys	Integrated Circuit Systems
IntCompSys	Integrated Computer Systems
Int Tech	Integrated Technology Corp.
Intech	Intech Microcircuits Div.
Intel	Intel
Interdesign	Interdesign
Intersil	Intersil
Intronics	Intronics
ITT	ITT Semiconductors
Kinetic Sys	Kinetic Systems
Kontron	Kontron Electronics
Lambda	Lambda Semiconductor
Linear Tech	Linear Technology
LSI Comp	LSI Computer Systems
LSI Logic	LSI Logic Corporation
Master Logic	Master Logic Corporation
Matrix	Matrix Corp.
Matrox	Matrox Electronic Systems
Maxim	Maxim Integrated Products
MCC	Micro-Computer Control
MCE	MCE Electronics
Micrel	Micrel
Micro Innov	Micro Innovators
Micropac	Micropac Industries
Micro Net	Micro Networks
Micro Pwr	Micro Power Systems
Micro Sci	Micro Sciences Corp.
Micro Tech	Microcircuits Technology
Micro-Link	Micro-Link Corporation
Micron	Micron Technology
MilerTron	MilerTronics
Miller	Miller Technology
Mitel	Mitel Semiconductor
Mitsubishi	Mitsubishi Electronics
MMI	Monolithic Memories, Inc.
Mostek	Monolithic Systems Corp.
Motorola	Mostek
MRC	Motorola Semiconductor
Murray	MRC Systems
Monosil	Murray Consulting
National	National Semiconductor
NCM	NCM Corp.
NCR	NCR Corp., Microelectronics Division
NEC	NEC Electronics
Nitron	Nitron
OAE	Oliver Advanced Engineering
Octagon	Octagon Systems Corp.
OEI	Optical Electronics Inc.
Ohio Sci	Ohio Scientic
OKI	OKI Semiconductor
Omnibyte	Omnibyte Corp.
Onset	Onset Computer Corp.
Panasonic	Panasonic
Pico Design	Pico Design
Polycore	Polycore Electronics
Plessey	Plessey Semiconductors
PMI	Precision Monilithics, Inc.
PragDes	Pragmatic Design Inc.
Pro-Log	Pro-Log Corp.
Quay	Quay Corp.
Raytheon	Raytheon Semiconductor
RCA	RCA Solid State Division
RCI Data	RCI Data
RELMS	Relational Memory Systems
Reticon	Reticon
RIFA	RIFA
Rockwell	Rockwell, Microelectronic Devices
RTC	Riehl Time Corporation
Sanyo	Sanyo
SBE	SBE, Inc.
SEEQ	SEEQ Technology, Inc.
SPI	Semi Processes Inc.
Siemens	Siemens
Si-Fab	Si-Fab
Signetics	Signetics
SGS	SGS Semiconductor
Sharp	Sharp
Silicon G	Silicon General
Siliconix	Siliconix
Silicon Sys	Silicon Systems Inc.
Siltronics	Siltronics
SMC	Standard Microsystems Corp.
S MOS	S MOS Systems
Solarise	Solarise Enterprises
Solitron	Solitron Devices
Sprague	Sprague Electric Company
SSM	Solid State Micro Technology for Music
SSS	Solid State Scientific
Stag	Stag Microsystems
STC	Storage Technology Corp.
STD	STD Microsystems
Struc Des	Structured Design Inc.
Stynetic	Stynetic Systems
Sunrise	Sunrise Electronics
Sunshine	Sunshine Semiconductor
Supertex	Supertex Inc.
Symtek	Symtek Corp.
Synertek	Synertek
Sys Innov	Systems Innovations
Tau Zero	Tau Zero Inc.
Technitrol	Technitrol
Tektronix	Tektronix
Teledyne C	Teledyne Crystalonics
Teledyne P	Teledyne Philbrick
Teledyne S	Teledyne Semiconductor
Telefunken	Telefunken
Telmos	Telmos
Teltone	Teltone Corporation
TI	Texas Instruments
Third Domain	Third Domain
Thomson-CSF	Thomson-CSF Components Corp.
Toshiba	Toshiba America
Trans-Data	Trans-Data
TRW	TRW LSI Products
Unitrode	Unitrode
Universal	Universal Semiconductor, Inc.
Varix	Varix Corp.
VLSI Design	VLSI Design Associates
VTI	VLSI Technology, Inc.
Votrax	Votrax
Weitek	Weitek Corporation
Western	Western Digital
Wintek	Wintek Corp.
Xicor	Xicor, Inc.
Xycom	Xycom
Zendex	Zendex Corp.
Zilog	Zilog
ZyMOS	ZyMOS Corporation
Zytrex	Zytrex Corp.

THE EMULOGIC® ECL-3211.

SCREEN
Automatically updated full-screen display of all registers and system status.

MAPPING
Full-speed, full-range mapping in internal, external, and mixed modes. Single-word resolution. Full-range offsets.

BREAKPOINTS
Eight 78-line real-time logical breakpoints for every chip, concatenated via logical switches and counters.

FAST KEYS
They're fast, direct, and don't get in your way. The most user-friendly operator aid available today.

CF/LOG
Selects screen with all Command File and Log function options.

TRACE
Breakpoint-controlled 511 x 72-bit real-time trace with precise disassembly.

TIME BASE
Multi-sourced time base–internal synthesizer or target clock.

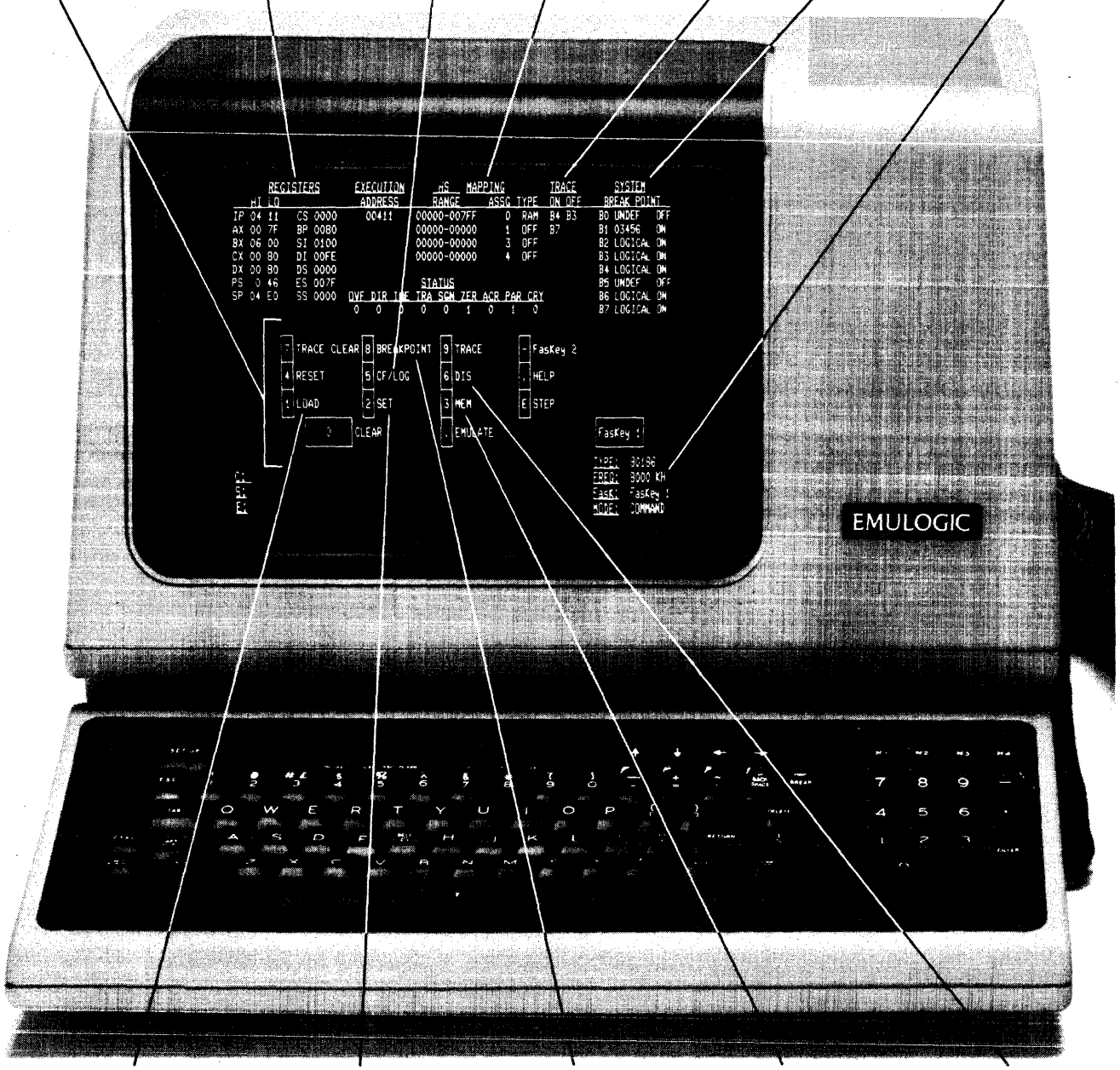

LOAD
Selects LOAD screen with all options.

SET
Selects screen with all SET options.

BREAKPOINT
Selects screen with all BREAKPOINT options.

MEM
Selects screen with all MEMORY options.

DIS
Selects screen with all DISASSEMBLY options.

© IC MASTER 1984

STILL THE BEST MICROPROCESSOR DEVELOPMENT SYSTEM YOU CAN GET. AT ANY PRICE.

WORLD'S BEST EMULATOR.

It's the best you can buy. Pure and simple.

Built around DEC's LSI-11 CPU's, RT-11, and a full range of DEC options like RL02 hard disks, the Emulogic general purpose emulator supports more chips from more manufacturers better than any other system.

With the ECL-3211 you can find your bugs in the lab, before your customers find them in the field. It lets you probe into things that other systems can't even see. In fact, you probably can't define a condition that the 3211 can't trap. And yet it's easy to use.

"NO-WAIT-STATE" EMULATION.

Up to the full rated speed of every chip with all features implemented. Doesn't steal any interrupts, stack pointers, stack space, or memory space. Handles all types of interrupts in any mapping configuration. Logical switches, counters, and trigger outputs manipulated in real time at no cost to user program.

COMPLETE HELP FACILITIES.

Our new "FAST KEYS" and Advanced Command Syntax make it a snap to learn to use. You don't even have to read the manual to get started.

And once you've used it for one chip, you don't have to learn anything new for the next chip. The screen format is uniform for all chips, and all system functions are the same. All you have to learn is the chip itself.

WORLD'S BEST DEVELOPMENT SOFTWARE.

More powerful and easier to use than any in the field, the software tools available with every ECL-3211 let you develop and debug software as readily as hardware. So system integration gets done effectively and on schedule.

DEC Operating System. RT-11 Version 5 is standard for stand-alone ECL-3211's. (RSX-11M and VMS for multi-user systems.) It's the latest update of the field-proven PDP-11 operating system.

Keypad Editor. Full-screen-oriented KED Keypad editor that makes full use of DEC terminal functions.

Assemblers/Linkers. MACRO-11-based cross-assemblers and linkers for every chip. Mnemonics identical to original chip manufacturers. Pseudo-ops and directives of MACRO-11. No relearning from chip to chip.

Pascal/C Compilers. Available for most chips, they are true cross-compilers that produce executable code that can be run on the ECL-3211 or the target chip. Permit linking of assembly-level and compiler-level symbols and include utilities for standard load module format conversions.

High-Level Debuggers. Permit user to modify Pascal and "C" variables in the format of the high-level language. User can debug completely within the high-level language without reference to assembly-level parameters.

Advanced Command Syntax. Expanded HELP facility, new memory display and MOVE commands, greatly enhanced command file functions.

Now you can activate command files from breakpoints as well as the keyboard, include pauses for user response, nest multiple files up to five levels deep. With the new LOG command you can store any sequence of operations for later use.

MORE CHIP SUPPORT.

Emulation, simulation, and full software development support packages for the following chips:

Now shipping

8080	8086	Z80®
8085	68000	6502
8048	6809	6502S
8088	NSC800	

In beta test

80186	68010	9989
8031		

Scheduled for 1984

80188	68008
68020	

WORLD'S BEST MULTI-USER SYSTEMS.

If you need to coordinate the work of a team of hardware and software engineers, don't forget to check into Emulogic's multi-user systems:

EMUNET™-1. RSX-11M-based system for the PDP-11 family of host computers. Up to 15 users.

EMUNET-2. VMS-based system for the VAX family. Up to 60 users. Easy migration from stand-alone ECL-3211's and from EMUNET-1.

For more information on the ECL-3211 or our multi-user systems, contact EMULOGIC, Inc., Three Technology Way, Norwood, MA 02062, 617-329-1031 or 800-435-5001.

EMUNET is a trademark and Emulogic is a registered trademark of Emulogic, Inc.
LSI-11, MACRO-11, PDP-11, RL02, RSX-11M, RT-11, VAX, and VMS are registered trademarks of Digital Equipment Corporation.
Z80 is a registered trademark of Zilog, Inc.

EMULOGIC®
MICROPROCESSOR
DEVELOPMENT SYSTEMS

16-Bit High-Speed Microprocessor Design Aids-Software

Device	Pkg Type	Features
Design Aids		
PEP 45 Prototyping Microcomputer	Board	• Prototyping Microcomputer — Stand-Alone Prototyping, Evaluation, and Programming Board — F9445 CPU — 8KB RAM — Up to 32KB ROM — External Memory Expansion to Address up to 132K Bytes — Cycle Time of 50 ns (24 MHz F9445) — Multibus Compatible (IEEE-796)
FS-I Development Station	Basic System	• Complete Microprocessor Software Development Station — FS-I CPU with 128KB Memory — Two 8-Inch Floppy Disk Drives (2MB) — CRT Terminal
	Options	• Multi-User Option • Memory Expansion Option to 4MB • I/O Option — Eight Asynchronous RS-232 Ports — One Synchronous Communications Port — One PROM Programmer Port — One Parallel DMA Port • EMUTRAC™ Option — Complete Emulation and Tracing System for F9445, F6800, and F3870 Microprocessor Families • Pascal, BASIC, MICROFORTRAN, Real-Time Executive
Software		
Operating Systems		• IMDOS with All Utilities — Multitasking, Interactive Multi-User Disk Operating System • REX — Multitasking Real-Time Executive
Compliers		• Pascal Complier • BASIC Interpreter • MICROFORTRAN Complier • F9445 Diagnostics • F9445 PEPBUG — Comprehensive Debugging Tool • F9445 Timer • EMUTRAC Control

™EMUTRAC is a trademark of Fairchild Camera and Instrument Corporation.

© IC MASTER 1984

FAIRCHILD
A Schlumberger Company

FS-I
Fairchild System-I

Description

The Fairchild System-I (FS-I) is a versatile, multi-user development system designed to support software development and hardware prototyping for applications using Fairchild microprocessors, including the F8, F3870, F6800, F6809, F9445, F16000, and such upcoming microprocessors as the F9450.

Three principal versions of the FS-I are available: The FS-I Standard System, the FS-I Multi-User System, and the FS-I Entry-Level System. Numerous software and hardware options are available that operate under Fairchild's Interactive Multi-User Disk Operating System (IMDOS). The FS-I also supports the in-circuit emulation and tracing (EMUTRAC™) system for the F3870, the F6800, F6809, and the F9445 microprocessors.

Standard System

System features include:

- **CPU with 128K-Byte RAM and F9445 Instruction Set.**
- **A Winchester and a Double-Density Floppy Drive Provide Approximately 10M-Byte of Mass Storage.**
- **I/O Controller Board Provides Winchester/Floppy Disk Controller Interface.**
- **Nine Asynchronous Serial RS-232C Ports (Up to 19.2K Baud) Provide Support for CRT Terminal, Optional Letter-Quality Printer, Modem, and Other Serial Devices.**
- **One Synchronous Serial RS-232C Port (Up to 19.2K Baud) and Selectable Protocols, such as BISYNC, DDCMP, SDLC, and HDLC.**
- **PROM Programmer Port to Interface to the Optional Fairchild PROM Programmer Unit.**
- **Parallel Printer Port (Centronics-Compatible Interface).**
- **Programmable Real-Time Clock.**
- **One CRT Terminal.**
- **Single-User Version of IMDOS, System Processors, and System Utility Programs (see "System Software").**
- **BASIC Language Interpreter with Interface to Custom F9445 Assembly Language Programs.**
- **FS-I Diagnostic Programs.**
- **Provides Full Support for the F9445 and for the PEP 45 Microcomputer System.**
- **Hardware and Software Upgradable to Multi-User System.**
- **EMUTRAC Can Be Added to the Standard System.**

Multi-User System

System features include:

- **Fully Equipped for Four Timesharing Users (Expandable to Eight Simultaneous Users with Additional Terminals and Cables).**
- **A 16-Bit CPU with 128K-Byte RAM and F9445 Instruction Set.**
- **A Winchester and a Double-Density Floppy Drive Provide Approximately 10M-Byte of Mass Storage.**
- **Memory Management and Protection Unit (MMPU) Board with 384K Bytes of RAM (Gives the System 512K Words of RAM).**
- **I/O Controller Board Provides Winchester/Floppy Disk Controller Interface.**
- **Nine Asynchronous Serial RS-232C Ports (Up to 19.2K Baud) Provide Support for CRT Terminals, Optional Letter-Quality Printer, Modem, and Other Serial Devices.**
- **One Synchronous Serial RS-232C Port (Up to 19.2K Baud) and Selectable Protocols, such as BISYNC, DDCMP, SDLC, and HDLC.**
- **PROM Programmer Port to Interface to the Optional Fairchild PROM Programmer Unit.**
- **Parallel Printer Port (Centronics-Compatible Interface).**
- **Programmable Real-Time Clock.**
- **Four CRT Terminals.**
- **Multi-User Version of IMDOS, System Processors, and System Utility Programs (see "System Software").**
- **BASIC Language Interpreter with Interface to Custom F9445 Assembly Language Programs.**
- **FS-I Diagnostic Programs.**
- **Provides Full Support for the F9445 and for the PEP 45 Microcomputer System.**
- **EMUTRAC Can Easily Be Added to the Multi-User System.**

Entry-Level System

System features include:

- **A 16-Bit CPU with 128K-Byte RAM and F9445 Instruction Set.**
- **Two Double-Density Floppy Disk Drives Provide Approximately 1M-Byte of Mass Storage.**
- **I/O Controller Board Provides Floppy Disk Controller Interface.**
- **Nine Asynchronous Serial RS-232C Ports (Up to 19.2K Baud) Provide Support for CRT Terminal, Optional Letter-Quality Printer, Modem, and Other Serial Devices.**

System Software

The interactive multi-user disk operating system (IMDOS) is the principal operating system for the FS-I. In addition to being an operating system, the IMDOS includes the following features that are useful for developing F9445-based systems:

IMDOS	Single-User Supervisor—The supervisor manages the FS-I resources and controls the I/O.
	Multi-User Supervisor—The supervisor manages the FS-I resources for up to eight simultaneous users, controls the I/O, and interfaces transparently to the MMPU board (included only with the multi-user system).

™ EMUTRAC is a trademark of Fairchild Camera and Instrument Corp.

© IC MASTER 1984

	Executive—The executive provides the command language interface between the user and the supervisor.
EDIT	The EDIT program provides the ability to create and modify text files.
MACRO	The MACRO program is the macroassembler for F9445 macro assembly language.
RELOAD	The RELOAD program is used to link relocatable macro assembly language programs to create executable F9445 absolute assembly language programs.
PEPBUG-45	The PEPBUG-45 program is a virtual console and debugging tool for F9445 absolute assembly language programs. The PEPBUG-45 program is also available in PROM.
PEPLINK	Provides capability to download programs from the FS-I to PROM or RAM on the PEP38, PEP45, and PEP68 microcomputer systems.
Utility Library	Implements the utility functions listed in the IMDOS and utility library users guides.
PHONE	The PHONE program establishes communication between the FS-I and a modem or telephone line. Software switches govern communication protocols.
SCRIPT	The SCRIPT program processes a text file that contains SCRIPT commands to produce an aesthetically pleasing document.
TYPESET	The TYPESET program processes a text file that contains TYPESET commands to produce an aesthetically pleasing document.
TESTS	A series of programs that test the FS-I hardware. The diagnostic programs are available on diskette in a version suitable for downloading to an F9445-based system.
BASIC	Language interpreter with interface to custom F9445 assembly language programs.

This powerful software package, which is included with the standard, multi-user, and entry-level systems, offers advanced capabilities that the user would normally expect from a much larger system, such as:

- **Multi-User Timesharing**
- **System Executive, Including File Management System with Version Numbers for Automatic Backup**
- **Memory Management and Protection by Memory Mapping**
- **Password Protection**
- **Interactive Command Language and Command Files**
- **Multiple Directory Devices**
- **Device-Independent I/O**
- **Hard Disk, Magnetic Tape, Modem, and Real-Time Clock Support**
- **Documentation Aids**
- **Concurrent Processing and Spooling**
- **One Synchronous Serial RS-232C Port (Up to 19.2K Baud) and Selectable Protocols, such as BISYNC, DDCMP, SDLC, and HDLC.**
- **PROM Programmer Port to Interface to the Optional Fairchild PROM Programmer Unit.**
- **Parallel Printer Port (Centronics-Compatible Interface).**
- **Programmable Real-Time Clock.**
- **One CRT Terminal.**
- **Single-User Version of IMDOS, System Processors, and System Utility Programs (see "System Software").**
- **BASIC Language Interpreter with Interface to Custom F9445 Assembly Language Programs.**
- **FS-I Diagnostic Programs.**
- **Full Support for the F9445 and for the PEP 45 Microcomputer System.**
- **Hardware and Software Factory-Upgradeable to Standard or Multi-User System.**
- **EMUTRAC and MMPU Can Be Added to System.**

System Hardware

The hardware comprising the FS-I development system is housed in a single enclosure that contains the mainframe CPU, I/O board, optional boards, and disk drives.

The mainframe consists of:

- **Single-Board 16-Bit CPU with 128K Bytes of RAM, 4K-Byte PEPBUG45 PROMs for Bootstrapping the System, Real-Time Clock, an RS-232C-Compatible Port, and a Centronics-Parallel Compatible Port.**
- **Power Supplies.**
- **I/O Controller Board with the Following:**
  - **Eight Asynchronous Serial RS-232C Ports, with Four Ports Having Full Modem Control and All Ports Having Data Rate Selectable Up to 19.2K Baud, that Allow Timesharing by Up to Eight Concurrent Users on Systems Equipped with MMPU Board and Multi-User Operating System Software.**
  - **One Synchronous Serial RS-232C Port (Up to 19.2K Baud) and Selectable Protocols, such as BISYNC, DDCMP, SDLC, and HDLC.**

© IC MASTER 1984

FS-I

- **A Parallel Data Channel Interface Compatible with Shugart Associates System Interface for Communicating with Disk Units.**
- **8-Bit Parallel Port to Interface with Optional Fairchild PROM Programmer.**
- **A Total of Nine Asynchronous Serial Ports (RS-232C-Compatible, DB25-Pin Female Connectors).**
- **One Parallel Printer Port (Centronics-Compatible Interface, DB25-Pin Connector).**
- **Expansion Slots for Fairchild's Optional I/O Controller Boards, Optional EMUTRAC Controller Board, Memory Expansion Boards, MMPU Board, and Industry-Standard, Nova® I/O-Compatible Interface Boards.**
- **Depending Upon System Configuration, the Mainframe Contains a Single 10M-Byte Winchester and a Single 0.5M-Byte Double-Density Floppy Disk Drive or Two 0.5M-Byte Double-Density Floppy Disk Drives.**

The MMPU board expands the physical address space of the FS-I to 4M words by performing logical-to-physical address translation. This board is required for multi-user system software. With its 384K bytes of RAM, the MMPU board extends the FS-I memory to 256K words.

Hardware Options

The FS-I systems support the following Fairchild-supplied hardware options:

- **Additional I/O Controller Boards that Provide Asynchronous RS-232C Ports (Up to 19.2K Baud) in Sets of Eight, a Synchronous RS-232C Port for each I/O Controller Board, Data Channel Interface to Disk Units, and a PROM Programmer Port for each I/O Controller Board.**
- **Fairchild's PROM Programmer Unit.**
- **MMPU Board that Provides Memory Mapping and Protection Expansion in Increments of 384K Bytes, Optional Multi-User Software Allows the MMPU Board to Support Eight Simultaneous Users.**
- **Memory Expansion Board that Provides 384K Bytes of Additional RAM (Requires an MMPU Board in the Chassis).**
- **EMUTRAC System Controller Board that Provides the Hardware Interface Between the CPU Board in the FS-I and Processor-Specific EMUTRAC Modules.**
- **EMUTRAC Modules and EMUTRAC Control Software that Support the F3870, the F6800, the F6809, and the F9445 Microprocessors.**
- **Additional CRT Terminals.**
- **Dot Matrix Printer—Texas Instruments Model 810 Basic RO Terminal (150 CPS), Centronics Parallel Interface, and Cable.**
- **Daisywheel Letter-Quality Printer—Qume Model Sprint 9145 with Bidirectional Forms Tractor (45 CPS), Serial Interface, and Cable.**

Software Options

F9445 MICROFORTRAN	An extended subset of FORTRAN66 that interfaces with custom F9445 assembly language subroutines. MICROFORTRAN produces "ROMable" F9445 code and can be operated under the real-time executive (REX).
F9445 PASCAL	A Jensen and Wirth-compatible PASCAL. The F9445 PASCAL compiler generates F9445 code and interfaces with custom F9445 assembly language subroutines.
FS-I/PEP 38 System Software	Includes F8/F3870 cross assembler and program for downloading to the PEP 38 system.
FS-I/PEP 68 System Software	Includes F6800 cross assembler, F6809 cross assembler, F6800-to-F6809 translator program, and program for downloading to the PEP 68 system.
F16000 Cross Software	Assembler, debugger, and downloader allow the FS-I to generate 16000 code that can be downloaded to an F16000-based system.
F9445 REX	A real-time executive for F9445-based systems. The REX system allows creation of custom REX programs, linkable using RELOAD.
F9445 PEPBASIC	A diskette version of PEPBASIC (supplied on PROM with the PEP 45 system). A 2K-word subset of BASIC, which accepts abbreviations, that is extendable with custom F9445 assembly language subroutines.
EMUTRAC Control Software	Optional EMUTRAC control software packages provide support for each processor-specific EMUTRAC module.

In addition, all Fairchild software for the FS-I is independently available without system purchase under an appropriate software license agreement.

Dimensions and Power Requirements

The FS-I standard mainframe enclosure measures only 26 inches long by 19 inches wide by 13 inches high. It requires a 115 V, 60 Hz ac power source. A 50 Hz system is also available.

© IC MASTER 1984

PEP-45 Prototyping, Evaluation and Programming Board

Microprocessor Product

Description

The Fairchild PEP-45 is a single-board microcomputer for Prototyping, Evaluation, and Programming of microprocessor-based system applications using the F9445 microprocessor. When used with the Fairchild System-I (FS-I) development system, the PEP-45 board provides capability for executing and debugging software directly on the F9445 microprocessor.

- **Stand-alone Prototyping, Evaluation, and Programming Board.**
- **Provides a Powerful Development Tool to Support F9445 Microprocessor-based System Development.**
- **Utilizes All the Advantages of the F9445 Microprocessor, with its Powerful Instruction Set and High Throughput.**
- **Memory Options for Bipolar and NMOS Memories.**
- **Interfaces with IEEE 796 Standard Bus.**
- **Buffered F9445 bus.**
- **On-board EPROM Programmer.**
- **Adapts to 16K or 32K Byte EPROMs or 64K Byte Masked ROMs.**
- **Standard- and High-Speed RAM Options.**
- **Console Commands.**
- **Two Serial I/O Ports.**
- **16-Bit Parallel Input/Output.**
- **Four Interrupt Sources.**
- **Five Status Lines.**
- **On-board +12 V and +25 V Voltage Converter.**
- **Requires Single +5 V Power Supply.**

The PEP-45 board is primarily intended for use in hardware prototyping and software development applications. It may also be tied to a host computer, such as the FS-I, for large program editing, assembling/compiling, and general file storage and handling. Cross-assembler software packages are available for creating machine-executable programs in formatted form. These programs may be down-loaded from the host computer system into the PEP-45 board via one of the two serial I/O channels. Since the PEP-45 board can operate in a transparent fashion, it may be placed in-line between the user's in-house terminal and the host computer, giving the PEP-45 the power of the host.

Also useful for incoming inspector of F9445 parts and as a microcomputer training tool, the PEP-45 interacts with the user at the control terminal, with prompts that assist programming. The control terminal may be a video terminal, printer terminal, or from a microcomputer control console.

Software Support

In addition to serving as an efficient stand-alone evaluation module, the PEP-45 is designed to operate as a key module of the FS-I development system. A PEPLINK utility transparently couples the FS-I video terminal to the PEP-45 board.

A powerful PROM-based PEPBUG debugging monitor provides commands for trouble-shooting assembly language programs and for developing and testing peripheral circuits and custom interfaces. A PROM-based PEPBASIC language allows programming in a high-level language.

Hardware Specifications

Microprocessor	
CPU	F9445
Data word size	16 bits
Instruction word size	16 bits
Address capability	128K bytes
Console controller	F9470
Memory	
RAM	8K bytes (4K words) static RAM (or optional high-speed RAM)
ROM	Eight sockets for 16K bytes of F2716 EPROMs (8K words), or up to 32K bytes using F2732 EPROMs (16K words), or masked 64K byte ROMs using F3564
Expansion	External memory in any combination of RAM or ROM up to 64K bytes maximum (in 16-bit-wide only)
Input/Output	
Parallel I/O	Two TTL-compatible, 16-bit I/O ports (one input, one output)
Serial I/O	Two programmable, asynchronous channels, with RS-232 interfaces. Each channel is software-selectable to a baud rate of 110, 300, 1200, 1800, 2400, or 4800 baud
Real-Time Clock	Continuously selectable real-time clock interrupts from approximately 200 μs to 200 ms

© IC MASTER 1984

System Buses

Dual backplane buses	PI — An 86-pin asynchronous system bus compatible with standard Multibus 16-bit slave boards and multi-master option
	P2 — A 60-pin buffered F9445 bus that allows complete expansion of processor capabilities and faster operating speeds
I/O buses	J1 — A 9-pin RS-232C serial I/O interface for control terminal
	J2 — A 9-pin RS-232C second serial I/O interface for a serial printer or a host computer
	P3 — A 40-pin applications connector with two parallel I/O ports (one input and one output), and with status and control bits. May be used for connection to the microcomputer control console or to a high-speed parallel printer (Centronics-type)
Connectors	P1 — An 86-contact, double-sided edge connector on 0.156″ centers
	P2 — A 60-contact, double-sided edge connector on 0.100″ centers
	J1, J2 — 9-pin, D-type subminiature right-angle connectors
	P3 — A 40-pin, double-sided edge connector on 0.100″ centers.

Power Supply Requirements[1]	+5 V ±5% at 3.5 A (typ)
Environmental Requirements	
Temperature	0°C to +50°C
Humidity	0% to 90% (noncondensing)
Physical Envelope Dimensions[2]	
Height	10.0 (254)
Length	12.0 (305)
Thickness	0.75 (19.05)
Weight	17 oz. (approximately)

Notes

1. Power may be applied to the board either through the card-edge backplane connector or by connection of discrete wires to the board.
2. All dimensions are in inches and millimeters (in parentheses).

Fairchild cannot assume responsibility for use of any circuitry described other than circuitry embodied in a Fairchild product.

Fairchild reserves the right to make changes in the circuitry or specifications at any time without notice.

FAIRCHILD
A Schlumberger Company

PEP 68 System Single-Board Microcomputer Development System

Microprocessor Product

Description

The PEP 68 System is a single-board microcomputer specifically designed to aid microprocessor hardware/software designers in designing, prototyping, and debugging their 6802-, 6808-, or 6809-based system. A powerful, ROM-based debugging monitor provides commands for trouble-shooting machine-language programs. Other monitor commands provide for easy development and testing of peripheral circuits and custom interfaces. The monitor includes a full complement of utility routines to make the hardware/software/firmware design cycles as easy as possible.

The PEP 68 System is useful as a microcomputer training tool. Its friendly interaction with the user at the control terminal, through its liberal use of prompting, makes procedures easy to learn for the beginner. The system can be operated using only a serial display terminal and a power supply.

Since the system possesses two separate bus connectors, expansion with external memory or peripheral boards is simply a matter of providing a backplane connection. Thus, the PEP 68 System can act as a *bus master* in a multicard system.

- **Single-Board, Stand-Alone System**
- **Processor Options—6802, 6808, or 6809**
- **Asynchronous Multibus* Compatible**
- **Auxiliary Synchronous 680X Bus**
- **Programming Socket for 2716 or 2732 EPROMs**
- **8K-Byte System Monitor in ROM**
- **9K Bytes of Static RAM—8K User, 1K System (Write-Protectable Segments)**
- **Six Sockets for User-Supplied ROM/EPROM (2K, 4K, or 8K Types)**
- **Sixteen Possible Memory Map Configurations (Switch-Selectable)**
- **Two High-Speed Audio Cassette Tape Interfaces**
- **Two Independent Serial I/O Channels—RS-232-C**
- **Independent Baud Rate Selection—50 Through 19.2K bps**
- **Connector for Parallel Printer (Centronics Type)**
- **Six 8-Bit Parallel I/O Ports Plus Controls**
- **Three Programmable 16-Bit Binary Timers**
- **+5 Volt-Only Operation**

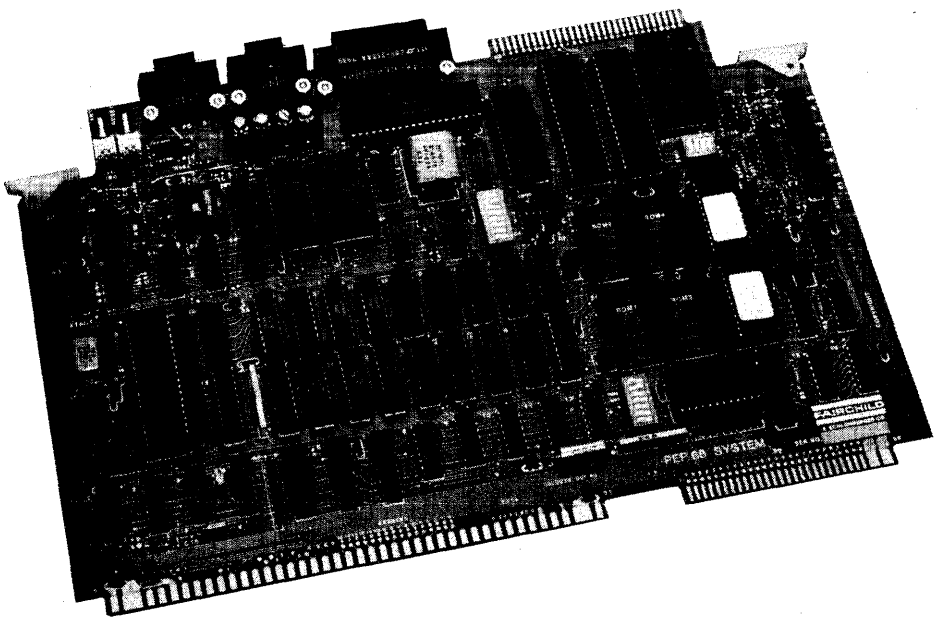

*Multibus is a trademark of Intel Corporation.

© IC MASTER 1984

occam programming system

the complete occam software development system

INMOS is paving the way to the next generation of system designs. The introduction of the concurrent language, occam, at last provides a solution to the real problems facing the system designers of today while offering unlimited future possibilities. **With a single language, capture all aspects of system design**—hardware, software or both—from back of the envelope sketches, through design and simulation to final implementation!

Try the occam evaluation kit to get acquainted with occam—then use the occam programming system as an affordable software CAD system to design and build your next microprocessor-based system, to investigate fifth generation architectures, to develop transputer systems, to implement a single user multitasking operating system for your PC, to build higher performance graphics subsystems, to design new signal processing systems. . . .

occam programming system

the first true software engineering tool

- multiwindow user interface
- soft function keys
- integrated full screen compiler/editor
- language-oriented editor understands occam syntax
- single key incremental compilation
- complete support for the transputer family
- generates efficient native code for iAPX86, MC68000 families and VAX
- occam programs interface to assembler and host OS
- source-oriented breakpointing
- novel textfolding features reflect system structure
- includes word processing facilities
- complete package with workstation or software-only for VAX/VMS
- available now

inmos

and occam are trademarks of the INMOS Group of Companies

Inmos Corporation • P.O. Box 16000 • Colorado Springs, Colorado 80935 • (303) 630-4000
Whitefriars • Lewins Mead • Bristol BSI 2NP • England • Phone Bristol 272 290 861

VME/10 MICROCOMPUTER SYSTEM

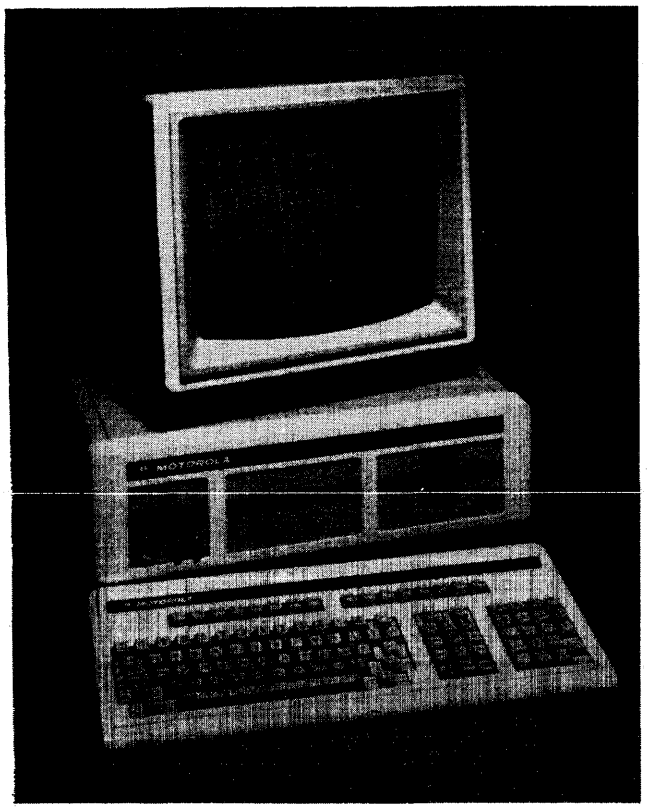

The VME/10 Microcomputer System is a compact yet powerful desktop designer's workstation that can be used for developing advanced microprocessor-based systems using Motorola's 8-bit and 16-bit families of microprocessors, microcomputers, and peripheral components.

MAJOR BENEFITS

- Provides Efficient Design Support for M6800 and M68000 MPU Families
- Excellent Development Software Complement
- Customizable Through VMEbus and I/O Channel for End Applications
- Multi-mode Graphics Hardware with Both Monochrome and Color Options.

The VME/10 Microcomputer System combines the flexibility of a customizable workstation with the attributes of a powerful development support system that let the system integrator or OEM design an end product with the same hardware and software that can eventually constitute the end system itself. With appropriate interfaces and peripherals, these systems may be specialized designers' workstations, or perhaps front-end processors associated with larger external equipments such as factory automation systems or large complex medical diagnostic instruments. In addition to raw processing power, these small but capable systems have the flexibility for just the right I/O and performance improvement features for dedicated, user-defined systems.

BASIC DESIGN FEATURES

- MC68010 16/32-bit Microprocessor Unit
- MC68451 Memory Management Unit
- Industry-standard VMEbus interface with full bus arbitration logic and software controllable interrupter.
- I/O Channel Interface for adding off-board resources such as A/D converters, serial and parallel I/O ports, etc.
- 384K Byte Dynamic RAM (multiported between graphics controller and local bus, and VMEbus).
- 8K Byte Static RAM for storage of user-definable character sets and display attributes.
- Two 28-pin sockets for ROM/PROM/EPROM storage of up to 64K bytes for custom applications.
- Battery backed-up time-of-day clock with 50 bytes of CMOS RAM storage.
- 15" video display having the following software controllable display formats:
  1. 25 lines by 80 characters — 8 x 10 characters with descenders (10 x 12 character field)
  2. 800 x 300 pixel for low resolution graphics
  3. 800 x 600 pixel for medium resolution graphics
  4. Pixel graphics with overlaid character displays
- Monochrome video display standard, with 7-level gray scaling (color optional).
- Detachable full ASCII keyboard with cursor control keys, numeric pad and 16 function keys.
- Mass Storage Subsystem providing both 5¼" Floppy Disk and 5¼" Winchester Disk Storage Units.

  Floppy Disk
  1 Mbyte Unformatted Capacity (655K Byte Formatted)

  Winchester Disk
  Choice of: (a) 6.38 Mbyte Unformatted Capacity (5 Mbyte Formatted)
  (b) 19.1 Mbyte Unformatted Capacity (15 Mbyte Formatted)
- Card cage options for feature expansion capability.
  Choice of: (a) Five I/O Channel Card Cage Slots (with 6.38 Mbyte Winchester option)
  (b) Five VMEbus Card Cage Slots with VMEbus backplane, plus four I/O Channel Slots (with 19.1 Mbyte Winchester option)
- Conformance to ergonomic standards applicable to video display and keyboard.
- VERSAdos Real-Time, Multitasking Operating System with M68000 Family Macro Assembler, plus tools and utilities.
- Capability of hosting hardware development tools
  — HDS-400 for M68000 Family 16/32-bit Emulation
  — HDS-200 for M6800 Family 8-bit Emulation
  — Bus State Analyzer for Logic Analysis Functions

© IC MASTER 1984

EXORmacs

M68000 DEVELOPMENT SYSTEM

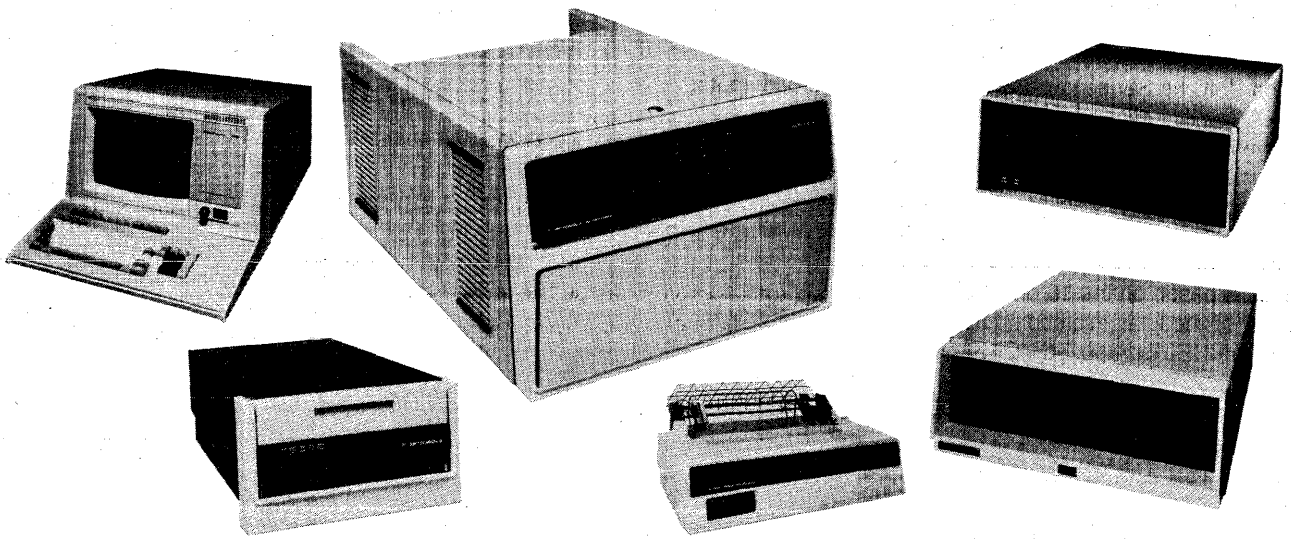

- Complete Development System for MC68000 MPU
- Up to Eight User Stations
- Multi-Processor Bus Arbitration
- Multi-Tasking Real-Time Operating System
- Resident Pascal High-Level Language
- Diagnostic Firmware
- Up to 192 Megabyte Fixed/Removable Hard Disk
- And Up To 2 Megabyte Dual Drive Floppy Disk
- Provisions For Future 32-Bit Microprocessors
- Optional Cross-Development Software for 8-Bit MPUs

The EXORmacs Development System is a state-of-the-art instrument for designing and developing advanced 16-bit microprocessor based systems using Motorola families of microprocessors, microcomputers, and peripheral components.

Coupled with the Motorola HDS-400 Microprocessor Hardware/Software Development Station it is also ideally suited for developing applications using the VERSAmodule and VMEmodule families of 16-bit board level application products and accessories.

Designed for flexibility and ease of use, the EXORmacs Development System takes advantage of the power and features of the MC68000 microprocessor unit (MPU). It reduces cost and development time by incorporating features which support 16-bit and future 32-bit microprocessor designs, as well as providing high-level language support through Pascal and FORTRAN. With an appropriate number of accessories, such as terminals, multiple-channel communications modules and hardware development stations, up to eight users may simultaneously develop and debug M68000 programs.

System Expansion Modules

Multichannel Communications Module (MCCM) — M68KMCCM
VERSAbus Adapter Module — M68KVAM
VERSAbus RAM 128K Byte — M68KVM10-3
VERSAbus RAM 256K Byte — M68KVM11-1
VERSAbus RAM 512K Byte — M68KVM11-2
VERSAbus Extender — M68KEXTM
VERSAbus Wirewrap — M68KWW

EXORmacs Basic System Configurations

- Hardware Chassis — with Power Supply and 15-slot Backplane
  Resident Module Complement
  - MC68000 MPU/MMU Module
  - DEbug Module
  - 256K Dynamic RAM
  - Disk Controller Module
- Software
  System V/68 Operating System Software
  - M68000 System V/68 OS
  - M68000 C Language Compiler Assembler and Linker
  - Instrumentation Support Utilities

  VERSAdos Software Development Tools
  - VERSAdos Operating System
  - CRT Editor
  - Macro Assembler
  - Linkage Editor
  - Symbolic Debug
- Peripherals
  - EXORterm 155 Display Console
  - Choice of Mass Storage:
  - 1 Megabyte Floppy Disk
  - 8/8 Megabyte Hard Disk
  - 25/25 Megabyte Hard Disk
  - 16/16 Megabyte Hard Disk
  - 16/80 Megabyte Hard Disk

EXORbus, EXORciser®, EXORmacs®, EXORset, EXORterm, HDS-200, HDS-400, UNIDOS, VERSAbus and VME/10 are trademarks of Motorola Inc.

VMC 68/2 Microcomputer

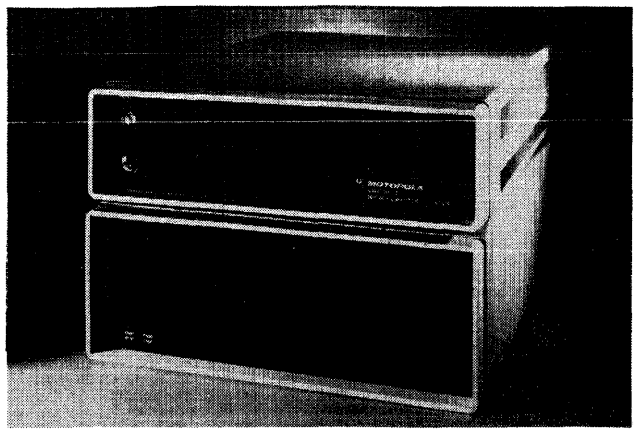

The VMC 68 Series is a high performance microcomputer system family intended for application by OEM's and system integrators starting from a product integration level formerly available only to the minicomputer user. The VMC 68 System Family will find wide application in industrial process control, automated testing, data acquisition, supervisory control, and many other factory and lab automation uses. The VMC 68 Series is based on the 16-bit M68000-based VERSAmodule Family of modular microcomputer products utilizing the industry and IEEE proposed VERSAbus standard system interconnect providing multiprocessing and intelligent peripheral controller architecture.

Also featured is the I/O channel which provides for the use of a broad selection of I/O modules for I/O flexibility.

VMC 68/2 System Features and Capabilities

Hardware-Only Package	Complete System Package
• MC68000-based VM02 Monoboard Microcomputer — Direct Addressing to 16 Megabytes — 128K Bytes Dual-Port RAM — Multiprocessor Architecture with System Controller Features — I/O Channel Interface for Functional Tailoring — Dual Multiprotocol RS-232C Serial Ports for System Flexibility • Dual 16-Bit Parallel Port I/Omodule — Centronics compatible Printer Interface — General Parallel I/O Applications • VERSAbug Firmware — Debug — Disk Bootstrap Load — Self-Test — Up/Downline Load • MC68120-based VM21 Universal Disk Controller — High-speed DMA data transfer to/from 1 or 2 SMD interface compatible disk drives AND Up to 4 EXORdisk II or III Floppy Disk Drives • VM11 Dynamic RAM Module with 256K Bytes of "global" RAM for program development and efficient multitasking system operation • 4 or 8-slot VERSAbus compatible VMC 68/2 Chassis — Power Fail/Restart Circuitry — 5 or 10 I/Omodule card slots for I/O Channel functional tailoring (Dual Parallel Port module occupies one of these slots) • 0°C to 50°C (32°F to 122°F) Operating Temperature Range • For 115 Vac 60 Hz Operation	In addition to all features of the Hardware-Only package: • MLD-16 Mass Storage Unit incorporating Disk Drive, SMD interface electronic module, and Disk Power Supply • 16 Megabyte (unformatted) 8-inch SMD interface compatible Disk Drive — 8M Bytes Fixed, plus 8M Bytes Removable Cartridge for storage and one-to-one System Backup — Embedded Servo Information to eliminate cartridge interchange problems and the need for head alignment — Simple Installation — Quiet Operation — High Performance — Disk Compartment sealed during operation — Exceptional Reliability (7500 Hour MTBF) — Long Service Life requiring no preventive maintenance in a benign environment • VERSAdos Real-Time Multitasking Operating System with Assembler and Utilities, including: — MC68000 Structured Macro Assembler — Text Editor, Linkage Editor, and Multitasking Debugger — System Diagnostics — System Generation (SYSGEN) capability for feature tailoring of the VERSAdos System • +10°C to +40°C (50°F to 104°F) Operating Temperature Range

Ordering Information

MVMC682-114	Four-slot VMC 68/2 Microcomputer System
MVMC682-118	Eight-slot VMC 68/2 Microcomputer System
MVMC682-114H	Four-slot VMC 68/2 Microcomputer System hardware-only package.
MVMC682-118H	Eight-slot VMC 68/2 Microcomputer System hardware-only package.

EXORdisk, EXORmacs®, EXORterm, I/Omodule, VERSAbug, VERSAbus, VERSAdos, VERSAmodule and VMC 68/2 are trademarks of Motorola Inc. LARK is a trademark of Control Data Corporation.

© IC MASTER 1984

M68000 System Development Software

SYSTEM V/68 AND VERSAdos OPERATING SYSTEMS

System V/68

The System V/68 Operating System is the standard UNIX-derived Operating System for the M68000 family of microprocessors. It offers a small compact kernel, which provides process scheduling and I/O facilities to all programs. In addition, a powerful command shell for interactive system controls and an extensive set of utility programs for many tasks, such as program development, text processing, electronic mail, and networking support are included.

Host Systems

The System V/68 Operating System is available as the host environment on Motorola development systems. The EXORmacs is a multiuser system capable of supporting up to eight users simultaneously. The VME/10 System is a single-user system. Hard disk is required for System V/68. Future Motorola Microsystems development systems will also be supported by the System V/68 Operating System.

Instrumentation Support

Communications support for the Motorola HDS-400 Hardware Development Station is included in System V/68. This provides customers with the full system development capability (both hardware and software) that they have come to expect from Motorola.

Languages

As an integral part of System V/68, C Language is offered. C Language has developed into one of the most popular commercial programming languages, and is used frequently in developing portable application software. System V/68 offers significant enhancements to C Language, along with several new language utilities. CXREF, a new cross reference program, and CFLOW, a new flow analysis program, are just two of the new utilities offered. System V/68 also includes a FORTRAN 77 compiler as well as an M68000 assembler and linker/loader.

Programmer's Workbench

The Programmer's Workbench utilities support the development of large software systems in a professional manner. They include the Source Code Control System (SCCS), which provides facilities to store, update and retrieve all versions of source code modules; YACC, which generates parsers; LEX, which builds lexical analyzers; and other utilities which enhance programmer productivity and the quality of work.

VERSAdos

The M68000 Real-time Operating System (VERSAdos) provides complete real-time, multitask support for the EXORmacs User. Features included in the VERSAdos are:

- Real-time multitasking executive
- Device independent I/O
- Floppy and hard disk support
- Sequential, random, and index sequential file capabilities.

CRT Text Editor

The EXORmacs CRT-oriented Text Editor runs under the supervision of the Operating System and provides the capability to create and modify source programs. The editor supports both command and cursor editing, utilizing the cursor, control characters and function keys of the EXORterm 155.

Structured Assembler

The M68000 Structured Macro Assembler translates source statements into relocatable machine code, assigns storage locations to instructions and data, performs auxiliary assembler actions designated by the programmer, and optionally produces a cross-reference listing. The M68000 resident assembler includes macro and conditional assembly capabilities plus certain control constructs that permit structured programming at the assembly language level.

Linkage Editor

The Linkage Editor provides the capability of merging two or more separately-compiled object units into a loadable object module file.

Symbolic Debug

The SYMbug/A program is used to debug other programs, whose source code may have been written in Motorola-provided assembler language, for execution on the M68000. The language processors, in cooperation with the Linkage Editor, supply symbolic information to SYMbug/A. This permits the user to describe the debugging requirements to SYMbug in terms close to the language in which the source program was written.

Pascal Compiler (Optional) M68K0PASCALH

Pascal is a block structured high order language that promotes good programming technique, is self-documenting, and simplifies program writing.

FORTRAN Compiler (Optional) M68K0FORTRNH

Motorola's FORTRAN exceeds ANSI FORTRAN 77 subset language specification, providing real-time processing capabilities.

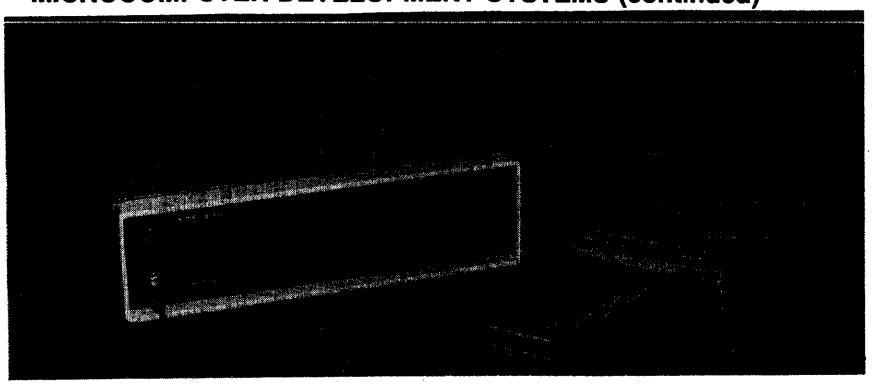

Control Station
M68KHDS400
M68KHDS400A

Family Board
M68KHDS16FB

Emulators
M68000HDS4
M68008HDS4-8
M68010HDS4-8

Software
M68KHDS4-XX

HDS-400 MICROPROCESSOR HARDWARE/SOFTWARE DEVELOPMENT STATION

Design Features

- 12.5 MHz Real-Time Emulation for MC68000 MPUs
- 10 MHz Real-Time Emulation with no Wait Cycles for MC68000 MPUs
- 8.0 MHz Emulation for MC68008 and MC68010 MPUs
- No User Target System Restrictions
- 32K bytes of 10 MHz No Wait Cycle Emulation RAM is Standard
- Emulation RAM Expandable to 64K, 128K or 256K bytes
- Full Symbolic Debug with EXORmacs and VME/10 Hosts
- Unrestricted User Memory Map
- One-Line Assembler/Disassembler
- Automatic Self-Test of Development Station Hardware
- M68KHDS400 Interfaces with EXORmacs Development System
- M68KHDS400A Interfaces with Motorola VME/10 and DEC VAX Hosts
- Compatible with Real-Time Bus State Analyzer

Major Benefits

- Reduces Development Costs
- Shortens Product Development Cycle
- Brings Product to Market Faster
- Versatility Protects Against Obsolescence

The HDS-400 Microprocessor Hardware/Software Development Station, in conjunction with a Motorola EXORmacs Development System or VME/10 Microcomputer System, or a DEC VAX Computer, provides a complete hardware/software development system for the Motorola M68000 family of microprocessors. It consists of a Control Station, with all the support circuitry for complete MPU emulation, and a separate Emulator Module with an internal microprocessor to match the particular MPU it is expected to emulate.

Two key capabilities of the HDS-400 make it very useful as a systems development tool. The first is the ability to serve as a fully functional substitute for the selected MPU in the user's target system. By plugging the HDS-400 into the socket on the prototype hardware, it allows efficient testing and debugging of both hardware and software. The second capability is the rapid debug and integration of the target system for the production of prototypes. This is accomplished by the use of the powerful set of commands in the HDS-400. The user may execute the commands by either entering the command code and its parameters, or by sequentially depressing function keys which provide a "fill-in-the-blanks" format with parameters such as file name, address, data, etc. When a single function key or a combination of function keys is pressed, a command code is automatically generated and the command syntax is displayed by the system.

Typical System Configuration

The HDS-400 Hardware/Software Development Station includes a four-slot Control Station with a built-in 30 A power supply and an Emulator Module for the specific MPU which will be used in the target system. Emulators are available for the MC68000, MC68008, and MC68010 MPUs.

The HDS-400 has been partitioned with options and part numbers that give the user versatility in defining the development system configuration. The user may choose from three host computers EXORmacs, VME/10, or DEC VAX with a variety of operating systems. Each of the HDS-400 Control Stations is delivered pre-wired to accept the optional Emulation Memory Module and the Real-Time Bus State Analyzer (BSA). EXORterm 155 is required in HDS-400 systems hosted by the EXORmacs and the VAX. The VME/10 functions as both host and terminal to the HDS-400, eliminating the need for a separate terminal in VME/10-based systems.

System Performance

The HDS-400 Development Station, when substituted for the MPU chip in the target system being debugged, performs the functions of the microprocessor being emulated — exactly as the MPU would have performed were it still in the circuit being tested. The emulator provides the interfacing with the RAM, ROM, and I/O devices and operates at the same speed as the MPU. There are no restrictions on the use of emulation memory that are not imposed by the MPU itself, and the memory may be mapped to the target system or to the emulator module.

The standard 32K bytes of emulation RAM provided in the Family Interface Module may be expanded with one of three optional Emulation Memory Modules. The three memory expansion modules available increase the 10 MHz no wait cycle emulation RAM to 64K, 128K or 256K bytes.

EXORmacs® and VME/10 are trademarks of Motorola Inc.
DEC and VAX are trademarks of Digital Equipment Corporation.

© IC MASTER 1984

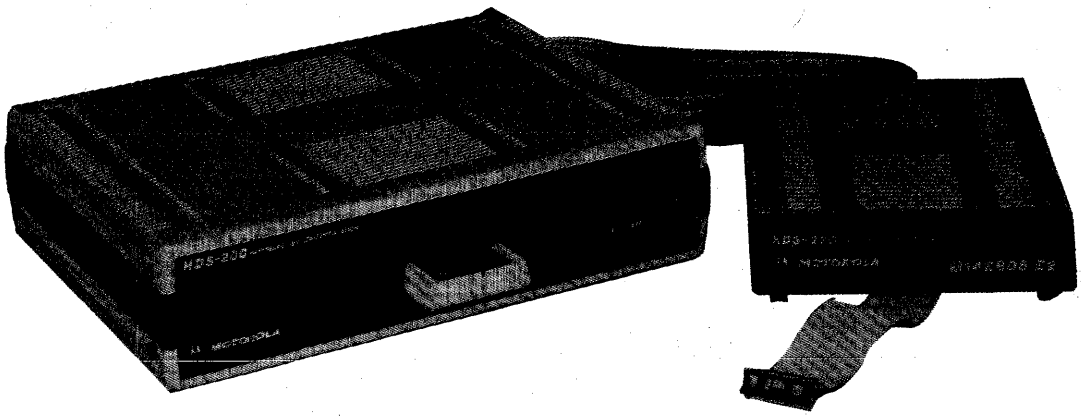

Control Station
M68HDS201

Emulators
M6804P2HM
M6805P234HM
M6805RU23HM
M6805S2HM
M6805T2HM
M146805E2HM
M146805F2HM
M146805G2HM

HDS-200 MICROCOMPUTER HARDWARE/SOFTWARE DEVELOPMENT STATION

Design Features

- Real-time emulation for M6804/M6805/M146805 MCUs.
- Sixteen programmed breakpoints.
- Prioritized breakpoints.
- Line-by-line assembler/disassembler.
- Program trace commands.
- Commands displayed for operator HELP.
- Memory map display.
- Macro commands stored for re-use.
- Transparent mode for host communication.
- Emulates more than 20 MCUs.

Operating Features

- Compatible with EXORmacs, EXORciser and EXORset software development systems.
- Low cost.
- Stand alone operation — frees software development system for parallel use.
- Easy to use.
- Operates with any standard RS-232C terminal and most host systems.

The HDS-200 Hardware Development System, in conjunction with a Motorola EXORset, EXORmacs or EXORciser software development system, provides a complete hardware/software development system for the Motorola M6804/M6805/M146805 families of microprocessors. It consists of a Control Station, with all the functional circuitry to complete MCU emulation, and a separate Emulator Module with an internal microcomputer and memory capacity to match that of the particular MCU it is expected to emulate.

Two major factors contribute to the HDS-200's usefulness as a systems development tool. The first is the ability to serve as a fully functional substitute for the selected MCU in the target system. By plugging the HDS-200 into the socket on the prototype hardware, it allows efficient testing of hardware as well as software debugging. The second factor is its powerful list of analysis commands. These easy-to-use, plain language commands enable the user to rapidly debug, integrate the target system and produce prototype systems.

Systems Development and Integration

The initial stages of developing an MCU-based system normally involve two parallel, rather independent, efforts. One is the hardware design — the other the software design. These efforts are frequently accomplished by two different teams of personnel, resulting in debugging problems that are often difficult and time-consuming. The HDS-200 simplifies this process because of its ability to bring the hardware and software development processes into intimate relationship with each other throughout the development cycle. Moreover, with the HDS-200 it becomes economically feasible to test alternate design approaches in order to determine the best solution.

The complete HDS-200 Hardware/Software Development System consists of three separate items — the HDS-200 Control Station, the Emulator Module, and an associated Firmware Cartridge.

HDS-200 Control Station

The station contains an internal power supply, logic circuits, clock and an MC6809 MPU. The MPU runs the monitor, controls the ports and interfaces with the emulators. It has two RS-232C communication ports for interconnecting with a host computer and a suitable terminal. Another cable connects the station to an associated outboard Emulator Module.

The Emulator Module

The module's output to the user's system is by a short, noisefree ribbon cable terminating in a plug to mate with the target hardware MCU socket. The emulator contains the target processor and various I/O interfaces to provide a compatible link between the Control Station and target hardware MCU/MPU socket.

Different modules are available for specific microprocessor family types. The various MCU Emulator Modules available include the M6804, M6805, M68705, and M146805 families. Each module comes with a matching Firmware Cartridge and an emulator cable/connector assembly.

The Firmware Cartridge

Paired with each Emulator Module is a small cartridge which is easily plugged into the HDS-200 station. This cartridge contains the necessary programs on ROM to enable the HDS-200 to adapt to the specific "personality" of the selected MCU type.

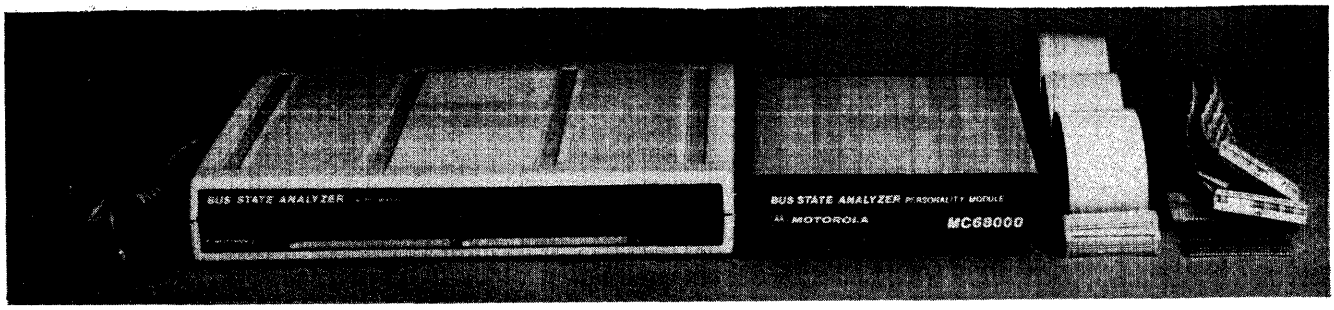

REAL-TIME BUS STATE ANALYZER

The Real-Time Bus State Analyzer (BSA) is a highly intelligent diagnostic tool that is designed specifically for use with microprocessors. It consists of a Control Module plus one of several "Personality Modules." The Control Module contains the analyzer hardware, control firmware, and I/O ports. The Personality Modules interface to selected MPU/MCU, EXORbus, or VERSAbus signals. The BSA stores data which appears on between 55 and 79 different lines.

In order to facilitate the gathering of pertinent data from the MPU/MCU or bus, a set of qualified triggering modes are provided. These modes can be broken into three categories: Continuous Trace Mode, Sequential Trigger Mode, and Window Trigger Mode.

CONTINUOUS TRACE MODE samples signals and stores signal information continuously on each occurrence of the clocking signal. It is primarily a default mode which the BSA automatically enters when power is first applied. There are no qualifications for the BSA to begin gathering information, so it will always be storing the signal states. This default mode is particularly useful when a sudden catastrophic failure occurs during a debugging session, before the user is able to configure the BSA. It is very likely that the events leading up to the failure will be stored in the BSA's trace store buffer.

SEQUENTIAL TRIGGER MODE requires that a series of events occur before the instrument triggers and starts to gather data; or conversely triggers and stops gathering data. Sequence Terms, as these events are called, must occur in order of specification, or triggering will not take place. A Sequence Reset Term can also be specified to reset the BSA and cause the instrument to begin looking for the Sequence Terms again. Sequential triggering will be most useful for debugging complex software, including loops, nested subroutines and complex branches.

WINDOW TRIGGER MODE provides a means of causing signal states to be stored if address accesses occur inside or outside of a particular address range. Both the upper and lower bounds of the range are programmable, and the size is variable from a single address to the full range of the memory map. Window triggering is useful for following programs that suddenly and unexpectedly leave the memory area in which they should be operating. It is also applicable for observing access violations in a multiple user environment.

SOFTWARE PERFORMANCE HISTOGRAMS are also provided to give an indication of the relative frequency of memory accesses within a particular memory range, with the exact range specified by the user. This histogram provides a means of determining where a program spends the greatest amount of time. The resulting information can then be used to compress inefficient code. A hardware performance histogram is provided to display the relative frequency of combinations of four user-selected signals within a user system.

In order to service these triggering modes and provide a complete set of operating features, an MC6809 microprocessor is located on the Control Module with local intelligence running from an operating system based in ROM. This operating system provides the data analysis and formatting functions for the operator including the interface to the hardware sampling the bus.

To reduce system redundancy, the terminal used by the operator to communicate with the development system will also serve to link him to the intelligence aboard the analyzer (it is a requirement of the CRT-based analyzer operating system that the terminal used be an EXORterm 155 Display Console). This communication will be achieved by means of a phantom or transparent serial link feeding from the terminal through the Bus State Analyzer control board and then to the normal terminal input channel of the development system. The logic onboard the BSA determines whether the information traveling over the link is destined for the development system, the Bus State Analyzer or the terminal. This allows the operating system or the user's software to run in the development system while analysis is being performed. Additionally, a means is provided for the BSA to operate in a stand-alone mode with only a terminal connected.

Part Number	Description
M68BSAC	BSA Control Module for use with BSA Personality Modules
M68BSACE	BSA Control Module with Enclosure
M68BSA1-1	BSA Personality Module for MC68000, MC68010 and MC68451
M68BSA2	BSA Personality Module for MC6800, MC6809, and MC6829
M68BSA3	BSA Personality Module for MC68008
M68BSA4	BSA Personality Module for MC6801 and MC68120
M68BSA5	BSA Personality Module for VERSABus
M68BSA6	BSA Personality Module for EXORbus

© IC MASTER 1984

LOW COST MPU/MCU EVALUATION MODULES

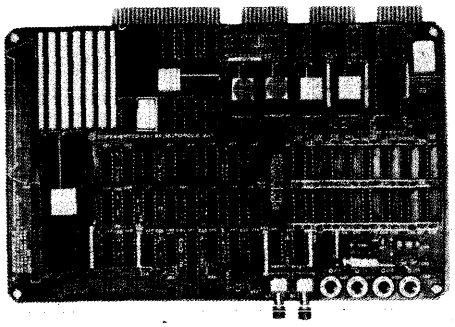

A series of inexpensive evaluation modules are available for Motorola's line of microprocessors and microcomputers. Evaluation modules allow the user to prepare, debug, and run software in the resident microcomputer. Even though the cost is low, an onboard ROM contains extensive commands for controlling I/O and debug operations, including down-up load S-record transfers.

Memory, internal registers, and I/O registers may be displayed and modified. Program execution may be traced one step at a time or breakpoints may be inserted for program interruption. Circuitry and firmware are included to allow the MCU's EPROM to be programmed.

MC68000 Educational Computer Board MEX68KECB

The MC68000 Educational Computer Board (ECB) serves as an economical introduction to systems based on the M68000 family of microcomputer products.

The ECB is based around a 4 MHz MC68000 MPU. Also provided are 32K bytes of RAM, arranged as 16K x 16. The firmware is contained in two 8K by 8 ROMs, addressed as an 8K by 16 block of memory. Two RS-232C serial ports are implemented with MC6850 ACIA's and an MC14411 baud rate generator, allowing selection of data rates from 110 to 9600 baud.

One of the M68000 peripherals, the MC68230 Parallel Interface and Timer (PI/T), provides a Centronix-type parallel printer interface and an audio cassette interface. An audio cassette recorder may be used to store and retrieve user programs.

The ECB uses a terminal, interfaced via one RS-232C port. Also, a small wirewrap area is provided for system I/O modification and buffering.

MC6801 Evaluation Module MEX6801EVM

The MC6801 Microcomputer Evaluation Module is a completely self-contained microcomputer on a single printed circuit card, providing the user with the means of evaluating the MC6801 microcomputer. As configured, the MC6801 may be evaluated in the Single-Chip mode by attaching an RS-232C-compatible terminal to the serial port of the module. Thus, the minimum functioning system consists of only the MC6801 and an MC1488 and MC1489 (RS-232C interface).

In the Expanded mode, the customer may add an ACIA, PTM, 4K bytes RAM or 2K EPROM and a programmable gate array for address configuration.

MC68701 Programming Module MEX6801EV1

This module has the same features as the MC6801 module but is also populated with an MC68701, 2K bytes of RAM, a programmed gate array, and a DEbug monitor (PRObug) which also provides the programming capability for the MC68701 EPROM device. It, also, can be used to evaluate the MC6801 microcomputer.

MC68120 Evaluation Module M68120EVM

The M68120 Evaluation Module is designed to assist the potential user of an MC68120 Intelligent Peripheral Controller (IPC) chip in developing software, performing limited circuit emulation, and operating as a serially-linked design on an EXORbus compatible board format.

All data communications are accomplished via two RS-232C ports. Consequently, the Evaluation module can be operated in a stand-alone configuration with only power brought in on the EXORbus connector. An optional operating configuration allows the M68120 Evaluation Module to be plugged into an EXORciser II or an EXORmacs VERSAbus System via a VERSAbus Adapter Module (VAM). The dual-ported 128-byte RAM can then be mapped into a local map or system map.

There is 4K of RAM populated on the board local bus along with decoding to permit an additional 4K RAM to be implemented in the user wirewrap area. The RAM allows user software development and debug for future programming of 2K, 4K, and 8K EPROMs to be inserted on the M68120 Evaluation Module. The Module has 64K bytes of address space on the local bus and 256 bytes of address space on the system bus.

MC68705 Evaluation Module M68705EVM
MC1468705 Evaluation Module M1468705EVM

Operation of an MC68705 or MC1468705 is simulated by the resident MC6805 or MC146805 MCU. Data transfer within the EVM is controlled by the monitor ROM firmware. In turn, this ROM is controlled from an external RS-232C compatible user terminal. User object code may be down-loaded to the user program RAM via the host port; a cassette port is also provided for this purpose. The host and terminal port ACIAs are baud rate strap-selectable from 110 bps to 19.2 Kbps in eight steps.

The MCU parallel I/O ports allow the user to connect externally to the simulated MCU I/O lines. These lines are also used to control the MC68705 or MC1468705 MCUs on-chip EPROM programmer. This is accomplished by inserting the MCU into the programmer socket and executing the appropriate monitor commands.

© IC MASTER 1984

EXORset 110

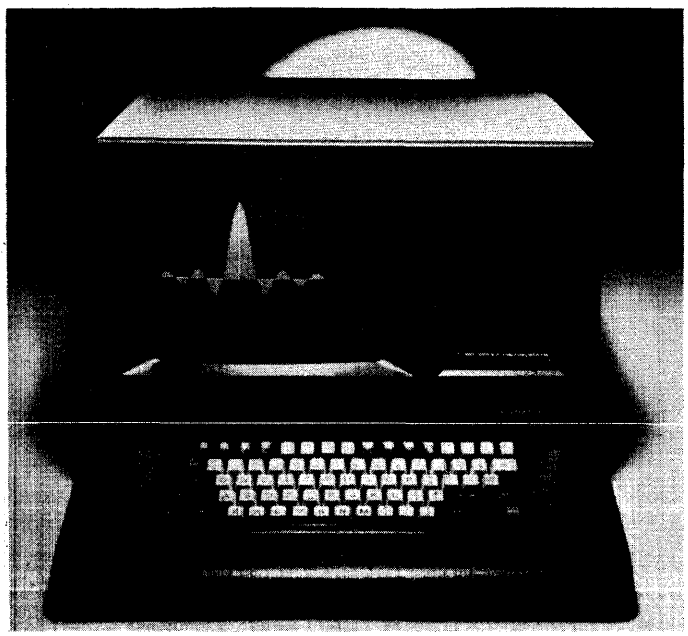

EXORset 110 Features

- MC6809 high performance microprocessor.
- Full ASCII Keyboard with 16 user-definable function keys.
- 12" CRT displaying 22 lines of 80 characters, or switchable to 16 lines of 40 characters and/or full graphics. 2K bytes of static RAM are included for CRT character refresh.
- 56K bytes of RAM and three sockets for up to 24K bytes of EPROM/ROM.
- Three card slots for EXORciser/Micromodule boards, four if no disk controller needed.
- Printer interface.
- Serial I/O port.
- EXORbug monitor/debug ROM included. An additional EPROM/ROM socket is available if user does not require EXORbug.
- Triple 16-bit programmable counter/timer included with input Gate and Clock signals and output signals available to the user.
- Meets FCC compliance for a Class A computing device.

A High Performance Processor

The EXORset controller is based on the new generation 16/8-bit microprocessor MC6809. The expanded instruction set, addressing modes, and architecture make execution of software particularly efficient and allow sophisticated programming techniques such as structured programming, position independent code, re-entrant routines and real-time operations. These capabilities make the 6809 microprocessor suitable for high-level language program development.

A CRT Display and Keyboard

The EXORset unit provides the user with a complete man/machine interface consisting of a full-size ASCII keyboard and 16 user-assigned function keys and a high resolution 12" CRT display capable of displaying 22 lines of 80 or 16 lines of 40 upper or lower case characters and simultaneously a full 320 x 256 dot graphic image.

Memory Flexibility

The EXORset controller allows for flexibility in the type and amount of memory to be used in the application. Three versions are available that provide optional amounts of mass storage: no floppy disk drives, with one double-sided mini-floppy disk drive for 160K bytes of mass storage and with two disk drives for 320K bytes of mass storage. All three versions include 2K bytes of dynamic RAM for CRT character refresh, 56K bytes of dynamic RAM and three strappable sockets that can be configured for 1K, 2K, 4K or 8K ROMs or EPROMs. A fourth socket, normally containing the 4K EXORbus firmware, can be configured for a user-designed monitor routine. The EXORset memory map is defined by PROMs, allowing the user to easily reconfigure the architecture of the system. Optional configurations information is available by contacting your local Motorola sales office.

On-Board Input/Output Ports

The EXORset unit provides three on-board input/output ports. An asynchronous serial communication port is provided with strap-selectable interface options of RS-232C, RS-422 or RS-423 and can be configured as a terminal or as a modem. The baud rate is software programmable from 110 to 19.2K baud. The user may also replace the asynchronous device with an SSDA device for synchronous communication application.

A 16-bit data plus four handshake control lines parallel input/output port is provided. This parallel port consists of a fully-buffered PIA device with a pinout that is compatible with a standard Centronics printer type interface. An optional adapter kit is available to interconnect this port to the industry standard optically-isolated solid-state relay mounting racks.

A triple 16-bit programmable counter/timer device is included, with each section's clock, gate and output signals available to the user. The output signals can be strapped to generate a system IRQ, FIRQ or NMI if required.

Add-On Input/Output Flexibility

The EXORset Controller has a four-slot card cage with bus connectors for installing additional EXORbus compatible modules available from Motorola as well as a number of other vendors. The Floppy Disk Controller Module occupies one of these four slots.

© IC MASTER 1984

Development Systems

EXORciser For 8-Bit Prototype Development

M6800 EXOR
M6809 EXOR

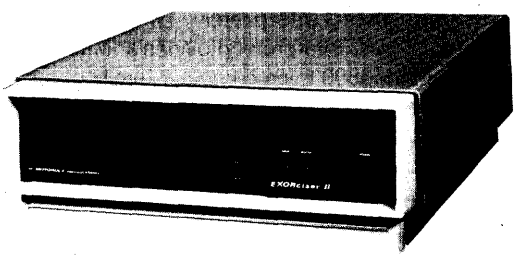

The EXORciser is an expandable development system that allows development of any 8-bit Motorola microprocessor or microcomputer configuration, from the simplest to the most elaborate. It comes with an MPU Module that provides system timing and a DEbug Module that contains system firmware. Both MC68B00 or MC68B09 MPU versions are offered in the EXORciser Development System.

With optional accessories, the EXORciser design and diagnostic functions can be extended to other members of the Motorola family of microprocessors and microcomputers.

The EXORciser with a USE (User System Emulator) option can be used to test and evaluate equipment external to its chassis. By removing the microprocessing unit from the user's system and connecting the USE cable from the EXORciser into the MPU's socket, the EXORciser with its EXbug firmware can be used to debug and troubleshoot microprocessor systems.

The basic EXORciser consists of a rugged cabinet with a built-in power supply, and a prewired bus-oriented 14-slot Backplane with MPU and DEbug Modules. Together these elements form a development microcomputer, with the capability of adapting the unit to a specific design problem by adding optional I/O and memory modules. Additional Motorola memory modules for the EXORciser can be selected to suit varying system configurations; for example, to meet the increased memory requirements of sophisticated high order language based systems. The concept of add-on modules permits the user to match the functional requirements of the systems being developed. Using one slot each for a floppy disk and printer function, ten slots remain for memory and I/O expansion. The EXORciser is a system that is never out-of-date, being at all times upgradable when new and expanded microcomputer functions become available.

Accessories for EXORciser

PROM Programmer — M68PP5

The PROM Programmer is designed to program a variety of MOS PROMs, EPROMs and bipolar PROMs. It can verify data from the PROM, transfer data from the PROM to the development system RAM memory, and transfer blocks of data from one memory location to another. Programming time depends upon the PROM used.

The M68PP5 is a powerful new EEPROM/PROM/EPROM programmer, designed to provide all of the functionality of the M68PP3 and more. A powerful feature of the M68PP5 is that it does not require removal of the EXORset or EXORciser covers during operation. This is accomplished via the Remote Socket Module. This module can be conveniently positioned by the user for his needs. It also has many other new or improved features. Such features include: programming even or odd byte PROMs/EPROMs, commands to display and modify data, attach printer command to send all responses to a hard copy printer. The power of the M68PP5 is further enhanced by the increased list of standard devices which it can program.

Software on diskette for both M6800 and M6809-based systems is included with the PROM Programmer.

System Analyzer — MEX68SA2 (6800), M6809SA (6809)

This unique instrument can be used to enhance the capabilities of the EXORciser as a design tool, or as an independent, portable, low-cost unit for field service of bus-compatible equipment.

In field service applications, the System Analyzer derives operating power and I/O signals directly from the system under test. It can stop the system at any point in its program, step through the program, change the contents of the system memory, and monitor and record the MPU's operation during a selected portion of the program without shutting down the operation.

In EXORciser applications, it complements the system's inherent program development capabilities. In conjunction with the EXORciser and USE, it offers a powerful combination of development and diagnostic tools available for microcomputer work.

MC6801 Development System — MEX6801

This product upgrades EXORciser and EXORset for development of MC6801-based systems. All three modes of MC6801 operation — single-chip, expanded multiplexed and expanded non-multiplexed — are supported by this system.

This system is fully compatible with all current supporting hardware and software and includes the USE function. It allows real-time emulation of the MC6801 application hardware and facilitates the debugging of software.

© IC MASTER 1984

Resident System Software

8-Bit Assemblers, Editors and Monitors

M6800 and M6809 Development System Software Package

Supplied with the Motorola floppy disk subsystem, EXORdisk, is a basic software development package consisting of the Motorola Disk Operating System (MDOS), CRT Editor, Macro Assembler and Linking Loader.

M6800/01/09 UP/Down Load — **M6800UPDWNLD, M6809UPDWNLD**

Permits a user to download software developed in a host system into an EXORciser or Micromodule; alternatively, memory-to-memory uploads are permitted between EXORcisers, and a memory-to-file upload to an EXORmacs; provided in both a 2K PROM and two 1K PROMS.

8-Bit High Level Languages and Cross Assemblers

M6800/M6809 MPL Compiler — **M68MPLR020M/ M6809MPL**

A high-level, user-oriented system programming language for the MC6800 and MC6809 MPU's, MPL is a block-structured language with features chosen for applicability to the microprocessor environment. This compiler is designed to operate in an EXORterm or EXORciser floppy disk-based environment with MDOS.

M6800/M6809 FORTRAN — **M68FTNR012M/ M6809FORTRN**

Resident FORTRAN is a high-level programming language widely used for scientific and engineering problem solving. This FORTRAN Compiler, which is a subset of the ANSI standard FORTRAN IV, translates the source program into a relocatable object module. The Linking Loader converts the relocatable object code into an executable object file.

M6800 Real-Time FORTRAN Compiler — **M68RTFR02M**

This FORTRAN Compiler enables the user to write real-time software in a high-level language for use in M6800-based Micromodule systems. It also contains an execution-time operating system, allowing several queues of tasks to be performed, with an ability to respond to real-time interrupts and to generate delays.

M6800 Resident BASIC Interpreter — **M68BASR010M**

The Resident BASIC Interpreter provides another problem-solving tool to the M6800 microcomputer family of products. BASIC is high-level programming language widely-used for education, general-purpose, and certain business-related applications. Decimal arithmetic, string variables and arrays, string functions, and printer output are several of the features.

M6809 BASIC-M Interactive Compiler — **M6809BASMR**

The BASIC-M Interactive Compiler provides an extension over standard BASIC in two major directions. It improves considerably the capabilities of the BASIC programming language and generates executable codes that can be used independently of the compiler itself. The compiler is available for M6809-based EXORciser.

M6809 Pascal — **M6809PASCLC**

M6809 Pascal produces relocatable object modules that may be linked with other separately compiled Pascal modules and/or assembly language modules. The object code is position independent, re-entrant and ROMable. Both a Compiler which produces a relocatable object module, and an Interpreter version are available for M6809-based EXORciser systems.

EXORciser CRT Editor — **M68EDITM**

EDITM is a memory resident record key oriented text editor that can do CRT editing on a line-by-line basis using only the left and right cursor functions and a few easy to remember control key sequences. EDITM can edit up thru a 132 character line, can be run under CHAIN command control, has error recovery procedures, and is USER configurable for different CRTs and default conditions. 6800 and 6809 versions of EDITM are included. 32K RAM minimum.

EXORset/EXORciser Document Processor — **M68XDOC/ M68MDOC**

DOC is a powerful text processing program. Any editor may be used to imbed the DOC processor commands with DOC interprets and formats in the output text. Among the many features are: file concatenation (book chapters), multiple file input (form letter/address file), automatic table of contents generation, automatic page numbering, left/right/center text justification, conditional text, and multiple line spacing. 24K RAM minimum.

© IC MASTER 1984

Peripherals

Use of appropriate peripheral devices can generate savings by affording faster program development. Each Motorola peripheral is supplied with the necessary circuitry to perform the necessary development system interface function.

EXORterm 155 — M68SXD10155A

EXORterm 155 is a video terminal which facilitates the exchange of data between the user and the development system via a high quality video interface in combination with keyboard entry and a serial communications link using speeds up to 9600 baud.

EXORterm 155 uses LSI components of the M6800 family to provide control of the display attributes, communication facility, terminal switch/indicator control, and keyboard inputs. The keyboard provides cursor control keys and special keys to invoke functions unique to the EXORciser and EXORmacs Operating Systems. These keys can also be used by the designer for special routines. An additional Text Edit mode feature permits multiuser editing.

EXORterm 155 may be connected for either RS-232C or 20/60 mA current loop operation. Like the EXORterm Development System, this display console contains a high-quality CRT with a full 1920-character screen and 7 x 9 ASCII characters.

The EXORdisk — M68DSK2, M68DSK3, M68KFD1102

The EXORdisk is a dual floppy disk storage system with its own package of development software. EXORdisk is designed to support either MDOS (the EXORciser Disk Operating System) or VERSAdos (the EXORmacs Disk Operating System). It facilitates high-speed data transfers through fast headsettling time and logical sector arrangement. An interface card connects this storage system to the EXORmacs, EXORciser or EXORterm Development Systems.

EXORdisk is available in various storage capacities. EXORdisk II offers 512K bytes of storage. It is a single-sided/single-density dual drive system with up to 256K bytes of memory per diskette. EXORdisk III is a double-sided/single-density dual drive system with total storage of 1 million bytes. An expansion unit is available for EXORdisk III which adds one additional disk drive and interconnecting cable to increase storage to 2 million bytes.

Hard Disk — M68KHDS16-1, M68KHDS32-1, M68KHDS50-1, M68KHDS96-1

The longer, more complex programs written for advanced 16-bit processors like the MC68000 make much higher data transfer speed and larger storage capacity a necessity. New Hard Disk systems offer the EXORmacs user a choice of high speed mass storage.

For multiuser operation in the EXORmacs system, Hard Disk is required to provide rapid storage and retrieval for a large number of files. Hard Disk storage greatly enhances and increases file access performance over a floppy disk-based system.

Dot-Matrix Printers — M68SP702C10, MPRINT703

Motorola dot-matrix printers are equipped with an interface module and/or an interconnection cable assembly that specifically adapts them to the various Motorola microcomputer development systems, including the EXORmacs, EXORciser, EXORterm and EXORset. In addition these interface accessories permit the printers to be used with Motorola Micromodules to provide more complete availability of microcomputer system components. Printer specifications are as follows:

FUNCTION	703	702
Print Speed (cps)	180	120
Lines-per-Minute (80 characters)	90	65
Bidirectional Printing	Yes	Yes
Dot-Matrix	7 x 7	7 x 7
ASCII Character Set	96	64
Tractor Feed	Yes	Yes
Condensed Print (10–16.5 cpi)	—	—

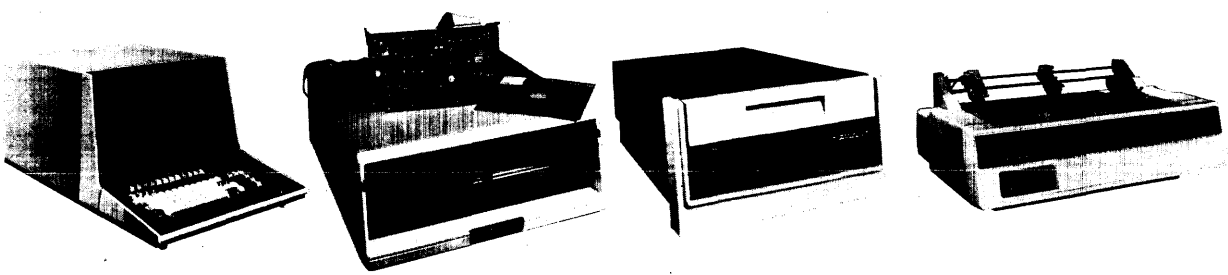

© IC MASTER 1984

Microcontroller On Line Emulator

MOLE™ SYSTEM

A MOLE (Microcontroller On Line Emulator) system consists of three components: a MOLE Brain board, a MOLE Personality board, and the user's host CPU. This partitioning provides the microcontroller design engineer with a new concept in flexibility. As an example of this flexibility consider the latitude in choice of host CPU. The host CPU may be NATIONAL SEMICONDUCTOR's COP400-PDS or STARPLEX I/II™, INTEL's™ MDS800 or INTELLEC™ Series II, or any other CPU operating under CP/M®—even one of many inexpensive personal computers. Software provided by NATIONAL SEMICONDUCTOR will run under control of the host computer CP/M operating system.

Further flexibility is provided by the Personality board. This component tailors the system to the emulation of a single microcontroller family or device. For instance, one Personality board supports COPS™ CMOS family, another, the NS455 Terminal Management Processor. These two boards support 21 microcontroller device types.

The Brain board is the pivotal component of the MOLE concept. In conjunction with a CRT terminal and Personality board it provides the user with a freestanding workstation for microcontroller emulation. It ties the system together by communicating with the host CPU, the Personality board and other Brain boards. Multiple Brain boards, tied to a common host, can function as emulators for individual projects where each Brain board is a separate project workstation. They can also function as individual microcontroller emulators within a multicontroller system.

The flexibility of the MOLE concept allows the user to efficiently emulate a wide range of microcontrollers in any application environment.

The MOLE components have been selected to provide maximum utility. The host CPU contributes cost effective bulk storage and high speed processing. Disk editing and assembly operations are handled by the host CPU. The results are down loaded to the Brain board over the RS-232 link. The Brain/Personality board combination then provides full emulation capabilities.

The resident firmware allows the user to: display and alter memory in both hex and mnemonic format; initiate breakpoints, traces and timing on addresses or external events; examine and modify the internal resources of the microcontroller being emulated. Hardware and firmware are provided for programming EPROMs and EEROMs.

Once debugged, the code is transmitted via modem to NATIONAL SEMICONDUCTOR for use in creating the tooling required to manufacture the masked microcontroller part.

Thus the MOLE concept provides maximum flexibility to accommodate microcontroller selection and maximum utility for product development.

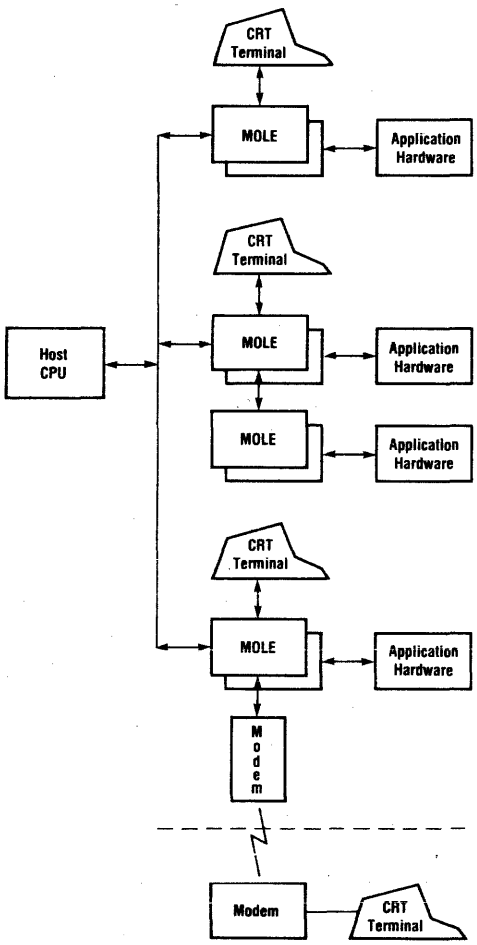

MOLE System Configuration

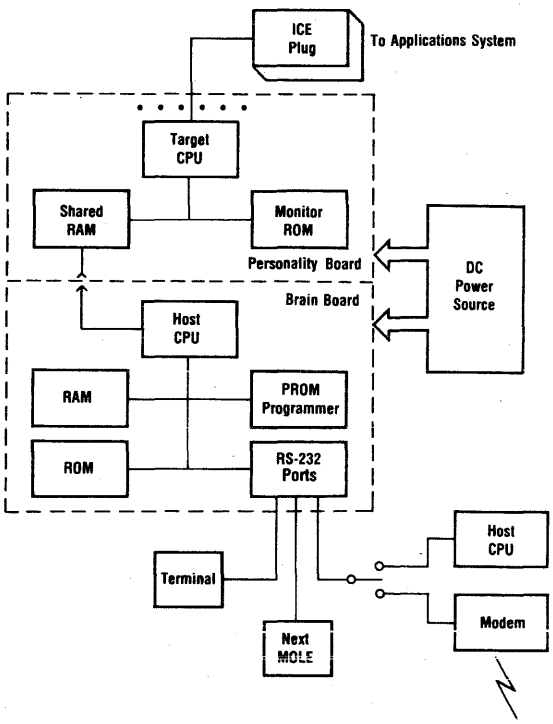

MOLE System Block Diagram

© IC MASTER 1984

MOLE BRAIN BOARD

The Brain board is the pivotal component of the MOLE concept. In conjunction with a CRT terminal and Personality board it provides the user with a freestanding workstation for microcontroller emulation. It ties the system together by communicating with the host CPU, a Personality board and other Brain boards. Multiple Brain boards, tied to a common host, can function as emulators for individual projects where each Brain board is a separate workstation. They can also function as individual microcontroller emulators within a multicontroller system.

The choice of host CPU is largely left to the user. The host CPU may be NATIONAL SEMICONDUCTOR's COP400-PDS or STARPLEX I/II, INTEL's MDS800, INTELLEC Series II, or any other CPU operating under CP/M—even one of many inexpensive personal computers.

The MOLE Brain board uses a NSC800 microprocessor with 64K RAM and 32K ROM. It has an EPROM/EEROM programmer for on line changes in software. There are three RS-232 ports and a bus to connect the Brain to the MOLE Personality boards for actual emulation of software in the user's application system.

The RS-232 ports are used via the communication routine, in firmware, to interface with a host CPU and a user terminal, plus a printer or other MOLEs. This gives the user great utility during system development.

The bus allows the user access to the entire MOLE family of Personality boards. These Personality boards tailor the MOLE system to each specific microcontroller family. Thus the MOLE concept provides maximum flexibility to accommodate microcontroller selection and maximum utility for product development.

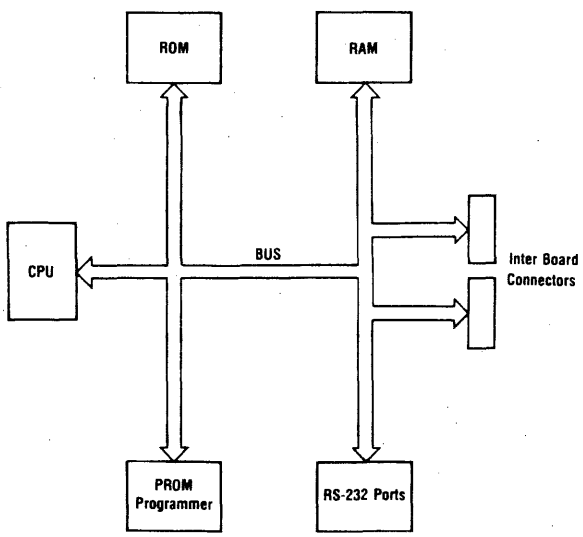

MOLE Brain Board Block Diagram

- Supports NSC's entire family of MOLE Personality boards
- Single 5V operation
- Ability to interface to a wide variety of host computers
- Full communication control with host computer, a modem or other MOLEs
- Three RS-232 ports
- Auto baud selection (110, 300, 600, 1200, 2400, 4800, 9600, 19200 baud)
- Mask data submission via modem
- Self diagnostics
- Program EPROMS
  MM2758
  MM2716, NMC27C16
  MM2732, NMC27C32
  NMC2764
- Program EEROMS
  NMC2816

PHYSICAL SIZE
10" × 12"

POWER REQUIREMENTS
+5V DC @ 3.5A
+21V or +25V @ 50mA
(Optional—required only for PROM programming)

WHAT P/N TO ORDER
MOLE-BRAIN

MOLE-BRAIN PACKAGE CONTAINS
MOLE Brain Board
MOLE Brain User's Manual
2 RS-232 Cables
Power Cable
Miscellaneous Hardware

© IC MASTER 1984

MOLE™ COPS™ CMOS FAMILY
PERSONALITY BOARD

The CMOS Family Personality Board supports the emulation of the COP400 CMOS family of Microcontrollers, specifically, the COP444C, COP445C, COP424C, COP425C, COP426C, COP410C, COP411C. The Personality board allows the user to emulate the appropriate CMOS Microcontroller in the end system for fast development of the user's application software and hardware. The Personality Board consists of: a monitor in firmware; the hardware to control the operation of the Microcontroller in the emulation system; and an In-System-Emulator cable to connect the emulator to the application system. The ISE cable has the same pin configuration as the final masked part.

The Personality board monitor is contained in 32K of ROM and is directly executable by the NSC800 microprocessor on the Brain board. The monitor commands will allow the user to execute the application software, examine internal registers and I/O, examine and change object code, execute time measurement and set trace or breakpoints.

The Personality board also contains shared memory (RAM) for application programs and the necessary hardware logic for trace and breakpoint operation.

As soon as the program is thoroughly tested, the code is sent via modem to NATIONAL SEMICONDUCTOR for use in creating the tooling required to manufacture the masked CMOS COPS production part.

The CMOS Personality board is only one of a family of Personality boards that tailor the MOLE system to a specific microcontroller family. Thus, the MOLE concept provides maximum flexibility in microcontroller selection and maximum utility for product development.

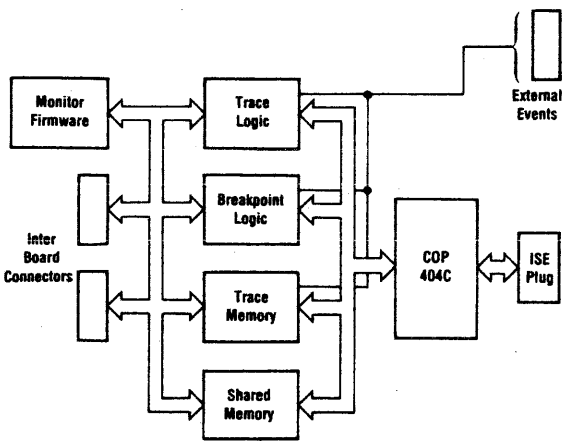

MOLE CMOS Family Personality Board Block Diagram

- Supports entire COPS CMOS family
- Single 5V operation
- Firmware monitor directly executed by Brain CPU
- Firmware diagnostics directly executed by Brain CPU
- 2K bytes of shared memory
- 256 deep trace memory
- Eight external event inputs
- Trace on multiple addresses
- Trace on multiple address ranges
- Trace on external events
- Breakpoint on multiple addresses
- Breakpoint on multiple address ranges
- Breakpoint on external events
- List and alter shared memory
- Print and modify internal registers
- Singlestep
- Next—singlestep around subroutine calls
- Trigger output for logic analyzer
- Real time emulation

PHYSICAL SIZE
12″ × 12″

POWER REQUIREMENTS
+5V @ 3.5A

WHAT P/N TO ORDER
MOLE-COPS-PB001

MOLE-COPS-PB001 PACKAGE CONTAINS
MOLE CMOS COPS Personality Board
MOLE CMOS COPS PB Manual
3 Emulator Cables
Power Cable
Miscellaneous Hardware

© IC MASTER 1984

National Semiconductor

MOLE NS455 (TMP)
PERSONALITY BOARD

The NS455 Personality board allows the MOLE system to emulate the NS455 Terminal Management Processor. The Personality board consists of a firmware monitor, emulation hardware and an In-System Emulator, ISE™, cable. The ISE cable has the same pin out as the masked part and allows the Personality board to function within the application system.

The NSC800 CMOS microprocessor, located on the Brain board, directly executes the 32K of Personality board monitor firmware. The monitor allows execution of application software, examination and alteration of internal registers, examination and alteration of memory contents and setting of trace and breakpoints. The ISE cable connects these capabilities to the application system. Up to eight external events may be traced and stored in the 2K deep trace memory. Multiple breakpoint and machine code unassembly commands are at the users disposal.

Application programs of up to 8K bytes in length may be executed from Personality board RAM or user system memory. Video display RAM also may be accessed from the Personality board (2K bytes) or user system memory (64K × 16). Unique character sets may be displayed by accessing a high speed character font memory.

Once debugged, the code is transmitted via modem to NATIONAL SEMICONDUCTOR for use in creating the tooling required to manufacture the masked NS455 part.

The NS455 is only one of a family of Personality boards that tailor the MOLE system to a specific microcontroller or microcontroller family. Thus the MOLE concept provides maximum flexibility to accommodate microcontroller selection and maximum utility for product development.

- Supports NS455 (TMP) microcontroller
- Single 5V operation
- Firmware monitor directly executed by Brain CPU
- Firmware diagnostics directly executed by Brain CPU
- 8K bytes of shared program memory
- 2K bytes of video display memory
- 2K bytes of character font memory
- 2048 deep trace memory
- Eight external event inputs
- Trace on multiple addresses
- Trace on multiple address ranges
- Trace on external events
- Breakpoint on multiple addresses
- Breakpoint on multiple address ranges
- Breakpoint on external events
- List and alter shared memory
- List and alter display memory
- List and alter character font memory
- Print and modify internal registers
- Singlestep
- Next—singlestep around subroutine calls
- Trigger output for logic analyzer

PHYSICAL SIZE
12″ × 12″

POWER REQUIREMENTS
+5V @ 4A

WHAT P/N TO ORDER
MOLE-TMP-PB001

MOLE-TMP-PB001 PACKAGE CONTAINS
MOLE TMP Personality Board
MOLE TMP PB User's Manual
1 Emulator Cable
Power Cable
Miscellaneous Hardware

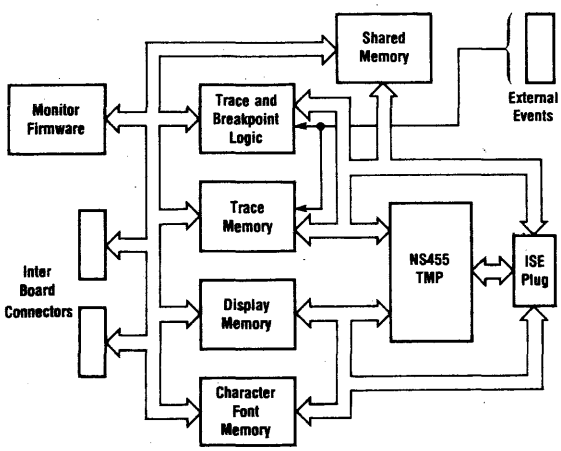

MOLE NS455 (TMP) Personality Board Block Diagram

COPS™, ISE™, MOLE™, and STARPLEX I/II™ are trademarks of National Semiconductor Corp.
CP/M® is a registered trademark of Digital Research Corp.
Intellec™ is a trademark of Intel Corp.

© IC MASTER 1984

SMDEV10000 S68000 USER WORK STATION (UWS)

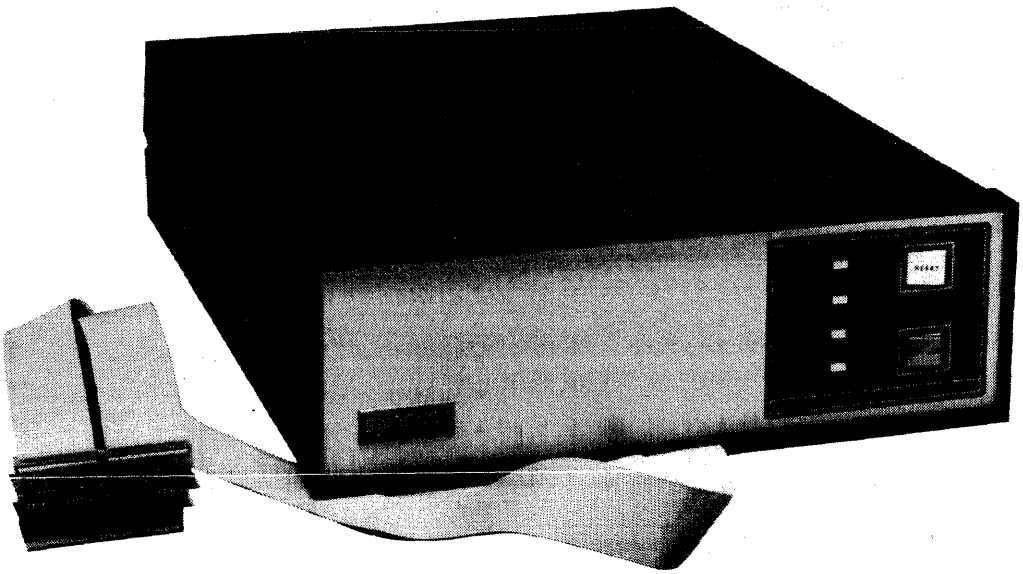

FEATURES

- Permits existing support equipment to be utilized
- 8MHz hardware in-circuit emulation via Signetics Footprint
- Includes ROM resident debugger and confidence tests
- 8MHz SCN68000 microprocessor
- 64Kb of the total RAM complement mappable to the system under development
- Four serial communications ports as well as serial and Centronics parallel printer interfaces
- Designed to function with Signetics cross software products

SMSFT10000 S68000 CROSS SOFTWARE MACRO ASSEMBLER

FEATURES

- Powerful, Motorola-compatible assembly language
- Interfaces directly to Signetics 68000 Pascal
- Unambiguous source language definition
- Registers may have symbolic names
- Highly flexible constant definition
- Both symbolic and mnemonic logical operators are supported
- Jump instruction format is optimized automatically
- Full complement of assembler directives
- Structured conditional assembly directives
- Modular programming support
- Source library facility
- Powerful macro facility
- Linkage editor and download software included

SMSFT16000 S68000 CROSS SOFTWARE PASCAL CROSS COMPILER

FEATURES

- High level structured programming language
- Structured data types
  - —Array, string, record, boolean, character
  - —User-defined data types
- Modular programming extensions
- Assembly language program interface
- Complies with IEEE 770-81 standard
- Generates 68000 native code
- PROM-able run-time code
- Full listing format control
- Flexible compiler option control
- Cross linkage editor and upload/download software included

© IC MASTER 1984

TEXAS INSTRUMENTS
PROGRAMMABLE PRODUCTS DIVISION · M/S 6432
POST OFFICE BOX 1443 · HOUSTON, TEXAS 77001

XDS Development System

XDS is a new concept in microprocessor development, featuring host-independence and a consistent tool set for the different TI microprocessor families.

The host-independent configuration of the XDS, coupled with a transportable set of development and debug tools lets the user select the TI processor best suited for solving his problem. Having a common set of tools available means the basic development format has to be learned only one time and then can be used with any TI TMS320, TMS7000, TMS9995, and TMS99000 family microprocessor as desired.

XDS cross-assemblers and host interfaces are available for running under IBM370 MVS operating system, DEC VAX VMS operating system and TI operating systems TX4, TX5, and DX10. This broad range of systems capability permits the development of software systems using pre-installed equipment familiar to the user.

Emulation of a TI microprocessor is provided by the XDS unit, using a RS232 link for interface with a variety of host systems. User supplied peripherals are also connected through similar RS232 links, thus creating a low-cost high-performance hardware/software development system. The XDS family of products supports RS232 downlink capabilities, in-circuit emulation, and target system debugging with breakpoint and trace capabilities, thus enhancing software development while executing real-time target system debugging. As an option intelligence can be added to provide High-Level Debug Language (XMPL) for increased target control.

Features

- Host independent TMS320, '7000, '9995, '99000
- Total support for all TI microprocessor families
- Real-Time in-circuit emulation capability
- Break point/trace capability
  - 2 hardware breakpoints
- Easily expandable
- Convenient desk-top size
- User-friendly hardware and software
- High performance at low cost
- Supports multiprocessor development

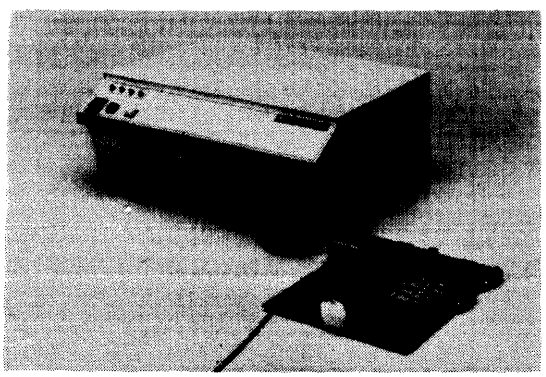

SUPPORTS	XDS 22 MODEL NUMBER
TMS32010	TMDS3262210
TMS7000	TMDS7062210
TMS9995	TMDS9562210
TMS99000	TMDS9962210

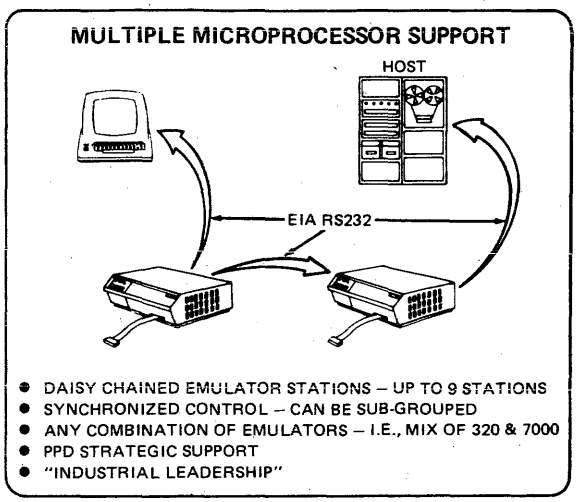

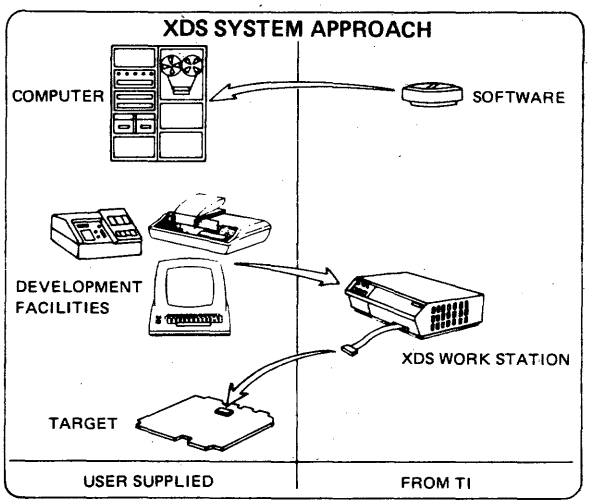

SUPPORTS	PART NUMBER	DESCRIPTION
TMS32010	TMDS3240110-21	TI X—SUPPORT
	TMDS3240120-06	TI X—SUPPORT
	TMDS3240120-08	TI X—SUPPORT
	TMDS3240120-10	TI X—SUPPORT
	TMDS3240120-22	TI X—SUPPORT
	TMDS3240130-03	TI X—SUPPORT
	TMDS3240210-08	VAX VMS X—SUPT
	TMDS3240211-18	VAX SIMULATOR
	TMDS3240310-08	IBM MVS X—SUPT
	TMDS3240320-08	IBM CMS X—SUPT
TMS7000	TMDS7040113-21	TI X—SUPPORT
	TMDS7040123-06	TI X—SUPPORT
	TMDS7040123-08	TI X—SUPPORT
	TMDS7040123-10	TI X—SUPPORT
	TMDS7040123-22	TI X—SUPPORT
	TMDS7040123-03	TI X—SUPPORT
	TMDS7040210-08	VAX VMS X—SUPT
	TMDS7040310-08	IBM MVS X—SUPT
	TMDS7040320-08	IBM CMS X—SUPT
TMS9995 TMS99000	TMDS9940110-21	TI X—SUPPORT
	TMDS9940120-06	TI X—SUPPORT
	TMDS9940120-08	TI X—SUPPORT
	TMDS9940120-10	TI X—SUPPORT
	TMDS9940120-22	TI X—SUPPORT
	TMDS9940130-03	TI X—SUPPORT
	TMDS9940210-08	VAX VMS X—SUPT
	TMDS9940310-08	IBM MVS X—SUPT
	TMDS9940320-08	IBM CMS X—SUPT

Copyright © 1983 by Texas Instruments Incorporated.

INTRODUCTION TO MICROCOMPUTER BOARDS

In this section single and multiple board microcomputers are arranged in alphanumeric sequence by data word size and, within that grouping, according to the microprocessor on which they are based, and then, in order of increasing CPU clock frequency.

A supplementary selection guide is included for microcomputer support boards. The boards are grouped according to supported computer systems.

Detailed Product Information provided by:

Advanced Micro Devices	2001
Cromemco	2006
Datel	2039
Motorola Semiconductor	2040
National Semiconductor	2047
Signetics	2052
Texas Instruments	2055
Western Digital	2058
Wintek Corporation	2062

The manufacturers listed above have provided detailed information on their latest and most significant products.

© IC MASTER 1984

EINFÜHRUNG MIKROCOMPUTER-PLATINEN

In deisem Abschnitt finden Sie Einplatinen- und Mehrplatinen-Mikrocomputer in der Reihenfolge ihrer Wortgröße und, innerhalb dieser Gruppierung, in der Reihenfolge der Mikroprozessoren, auf denen sie basieren. Hardware und Software-Unterstützung ist für jede verfügbare Platine aufgelistet.

Neu in diesem Jahr ist ein weiterer Selection Guide für Mikrocomputer-Zusatzplatinen. Die Platinen sind nach den unterstützten Computersystemen geordnet.

© IC MASTER 1984

INTRODUCTION AUX MICRO-ORDINATEURS SUR CIRCUITS IMPRIMES

Dans cette Section les micro-ordinateurs à circuits imprimés simples ou multiples sont regroupés suivant la taille du "mot de données", et, à l'interieur de chaque groupe, suivant le type de microprocesseur sur lequel, ils sont basés. Les supports hardware et software sont indiqués pour chaque circuit.

Une nouveauté cette année : l'existence d'un Guide de Sélection supplémentaire pour les circuits supports pour micro-ordinateurs. Les circuits sont regroupés d'après les systèmes ordinateurs utilisés.

© IC MASTER 1984

INTRODUCCIÓN A MICROCOMPUTA-DORAS DE TABLEROS DE CIRCUITOS IMPRESOS MÚLTIPLES

En esta sección microcomputadoras de tablero individual o múltiple están agrupadas en secuencia de acuerdo al tamaño de palabra para datos y, dentro de ese grupo, por medio del microprocesor en el cual están basados. Apoyo por medio de equipos y programas aparecén para cada tablero de circuitos impresos.

Nueva para este año es la guía de selección suplementaira para suporte de tableros de microcomputadoras. Estos tableros están agrupados de acuerdo al sistema de computadora al que sostienen.

マイクロコンピューターボード への案内

このセクションでは単数，複数ボードコンピューターがデータ，ワードサイズによってグループにまとめられ，そのグループ中ボードコンピューターの基になっているマイクロプロセサ順に記載されています。ハードウエア，ソフトウエア共各ボード毎にのせてあります。本年新たに加わったのはコンピューターサポートボード用の補足セレクションガイドでボードはコンピューターシステム毎にグループになっています。

© IC MASTER 1984

MICROCOMPUTER BOARDS

General						I/O			Memory			
										Supplied/Extra Capacity		
Data Word Size (bits)	Instruction Word Size (bits)	CPU Type	Clock Frequency Min/Max (MHz)	Bus Type	Supply Voltage (V)	No. of Serial Ports	No. of Parallel Lines	Max. Baud Rate (kb/s)	Directly Addressable Words (Kbytes)	RAM (Kbytes)	(P)ROM (Kbytes)	DMA Capability
8	8	AM8085A	4	Multibus		2	24		1M	0/0	0/4	
8	8	AM9080A	4	Multibus		1	48			4K/0	0/4	
8	8-24	F3850	2	Proprietary	5	1	64	0.11	64	1	1/10	
8	8-16	I805A	2.5/4.9	Microboard	5	1	25	38.4	64	2/40	0/32	x
8	8	LH-5080	2.5	Microboard	5		20		64	2	0/4	
8	8,16,24	NSC800	2	CIM	5, 12	0	16		64	2	0/4	
8	8-24	NSC800	2	CIMBUS		0	16		64	2	0/4	
8	8-32	NSC800	2	Proprietary	5	1	20	2.4	64	1.15/3	2/2	
8	8-16	NSC800	2	C-44	6.5-18		22	9.6	60	2.17	0/2	
8	—	NSC800	2.5	MA2000	5	3	26	—	64	2	4	
8	16	NSC800	2.5/4	Multibus	5, 12	1	44	19.2	64	4	0/32	
8	16	NSC800	2.5/4	Multibus	5, 12	1	44	19.2	64	8	0/32	
8	16	NSC800	2.5/4	Multibus	5, 12	1	44	9.6	64	16	0/32	
8	8-24	NSC800	4	CIMBUS		0	22		64	2	0/4	
8	16	TMS9995	12	Proprietary	5,-15	1	16	38.4	28	4/24	24/26	x
8	16	TMS9995	12	Proprietary	5	1	16	50	64	64/0	64/0	
8	8	Z8	3.7	Proprietary	5	2	40		2	2/0	0/4	
8	8-32	Z80	2/4	Proprietary	5, 12	4	0	64	64	1	2	
8	8	Z80	2/4	S-100	8				64	0	0	
8	8-32	Z80	2/4	Multibus	5, 12	2	32	19.2	64	64	64	x
8	8-32	Z80	2/4	Multibus	5, 12	2	32	19.2	64	1	0/8	
8	8-32	Z80	2/4	Multibus					64			
8	8-32	Z80	2.457	Proprietary	5	1	16		64	16	0/4	
8	8-32	Z80	2.457	Proprietary	5	1	16		64	4	0/4	
8	18	Z80	2.5/4	Cyberbus	5	0	0		64	0/8	0/16	x
8	16	Z80	2.5/6	STD	5, 12	0	0		64	0/2	0/4	x
8	8-24	Z80	2.5/4	STD-Z80	5				128	0/16	0/16	x
8	8-24	Z80	2.5/6	STD-Z80	5	1	16	76.8	128	0/32	0/32	x
8	8-24	Z80	2.5/6	STD-Z80	5	3		76.8	128	0/32	0/32	x
8	8-24	Z80	2.5/8	STD-Z80	5				128	0/64	0/64	x
8	8-24	Z80	2.5/8	STD-Z80	5	1	16	76.8	128	0/32	0/32	x
8	8-24	Z80	2.5/8	STD-Z80	5	1		76.8	128	0/32	0/32	x
8	8-24	Z80	2.5/8	STD-Z80	5	1		76.8	128	0/32	0/32	x
8	8-24	Z80	2.5/8	STD-Z80	5	1		76.8	128	0/32	0/32	x
8	8-32	Z80	3.68	STD-Z80		1	8		64	0/64	0/64	
8	8	Z80	4	S-100	8, 18	1	24		64	1	0/8	
8	8-24	Z80	4	Multibus	5	2	16	19.2	16	32	16	x
8	8-32	Z80	4	Flexibus!!!	5,12	2		500	64	1/8	0/8	x
8	8-32	Z80A	2/4	Multibus	5, 12	2	8	19.2	64	64/1Mb	0/32	x
8	8-32	Z80A	2/4	Multibus	5, 12	4	8	19.2	64	64/1Mb	0/32	x
8	8-32	Z80A	2/4	Multibus	5, 12	2	0	19.2	64	128/16Mb	0/64	x

Sequenced alphanumerically by data word size, CPU type and increasing clock frequency.

© IC MASTER 1984

MICROCOMPUTER BOARDS

Software Support									
Assembler	Debug/ Monitor	Editor	High Level Language	Operating System	Hardware Support	Comments	Model	Source	Line
						Programmable read and write protect attributes for memory, 5 16-bit programmable counter/timers.	AM95/4010	AMD	
						Programmable real time clock, memory shadow.	AM95/4006	AMD	
	x	x			x	One-megabyte address capability, memory-mapping RAM, byte-wide memory, on-card floppy disk interface, arithmetic processor and DMA.	DCM-1	Fairchild	
x	x	x	x	x	x	CMOS, programmable I/O, UART, RS422/232 expandable via universal backplane.	CDP18S600	RCA	
x	x	x	x	x	x	Executes Z8 instruction set, CMOS, Centronics printer interface, expandable via universal Microboard backplane.	MB80C	RCA	5
x	x	x	x	x	x	CMOS. NSC801, 802, and 804 have 1, 2 and 4MHz NSC800, respectively.	CIM-802	National	
						CIM802 with PROM shadowing capability.	CIM-802A	National	
	x	x				NSC800 evaluation board. Two 16-bit programmable counters/timers, RS232 interface, Wire Wrap area.	NSC888	National	
	x				x	18-bit timer, on-board clock, voltage regulator, 5 interrupts, 27C16 EPROM.	CPU-800A	Onset	
						Microcomputer Module	**MAZ800**	**National** (2051)	10
x	x	x	x	x	x	CMOS. Power dissipation is less than 1 W.	CBC800/204	DiversTech	
x	x	x	x	x	x	CMOS. Power dissipation is less than 1 W.	CBC800/208	DiversTech	
x	x	x	x	x	x	CMOS. Power dissipation is less than 1 W.	CBC800/216	DiversTech	
						Two 16-bit counters/timers with prescalers, 12 vectored interrupts.	CIM-804	National	
	x	x	x	x	x	Designed for industrial environment. Various combinations of RAM and EPROM.	CPU205	TauZero	15
x	x	x	x	x	x	Double Eurocard. 64K total RAM and ROM.	CPU206	TauZero	
x.	x	x	x	x	x	Development module for Z8 microcomputer.	**Z8-SCB**	**Zilog** (1753,1755,1759)	
				x	x	TTL-compatible serial ports with maximum baud rate of 9.6 kbits/s asynchronous, 64 kbits synchronous.	MM1-MSC	ContLogic	
x	x	x	x	x	x	CPU card.	**ZPU**	**Cromemco** (2009)	
x	x	x	x	x	x	Floppy controller, streaming tape interface, hard-disk interface, DMA, IEEE-488 controller.	MLZ-90	Heurikon	20
x	x	x	x	x	x	Software-programmable dual baud-rate generator, 4 counter-timers, 12-bit analog input channels.	MLZ-DAQ	Heurikon	
x	x	x	x	x	x	Replaces 8080 CPU board in Intellec 800, 888. Supports all Z80 software and architectural features. ISIS-11 compatible.	Z80SAM	RELMS	
x	x	x	x	x	x	Baud rates are software programmable from 50 to 38.4 baud. 4 8-bit counter/timer channels, 128 vectored interrupts, complete bus buffering.	**Z80MCB/16**	**Zilog** (1738)	
x	x	x	x	x	x	See above.	**Z80MCB/4**	**Zilog** (1738)	
x	x	x	x	x	x	On-board vectored interrupt controller and memory-mapped I/O.	1080	Cybersys	25
	x			x	x	Two I/O ports are occupied by on-board functions, one of which is a DMA controller.	ST4101	AppMicroTech	
						On-board CTC.	5320	STDMicro	
						General-purpose parallel interface, programmable baud rate.	5323	STDMicro	
						Three synchronous/asynchronous serial channels, programmable baud rate.	5324	STDMicro	
						On-board CTC.	5321	STDMicro	30
						Centronics interface, programmable baud rate.	5322	STDMicro	
						Clock/calendar, programmable baud rate.	5327	STDMicro	
						IEEE488 GPIB, programmable baud rate.	5328	STDMicro	
						9511 arithmetic processor, 9512 floating-point processor, programmable baud rate.	5329	STDMicro	
x	x	x	x	x	x	Eight-bit output port with handshake for printer interface. Flexible memory map configuration.	MDX-CPU4	Mostek	35
x	x	x	x	x	x	Five programmable timers, 110 to 76,800 baud serial port.	**SCC**	**Cromemco** (2010)	
x	x		x	x	x	Intended as supervisor for Multibus system.	RSBC-Z80/32	RELMS	
x	x	x	x	x	x	High-speed hardware floating point math optional 1862A. Master/slave mode capability for multiprocessor applications. Supports digital, analog systems.	1862¢A	Xycom	
x	x	x		x	x	Floppy controller, streaming-tape interface, hard-disk interface.	MLZ-91A	Heurikon	
x	x	x		x	x	Floppy controller, streaming-tape interface, hard-disk interface, DMA, Multimaster capability.	MLZ-92A	Heurikon	40
x	x	x	x	x	x	DMA, modem and SDLC/HDLC signals.	MLZ-93	Heurikon	

Bold face indicates additional data is provided on the page noted.

MICROCOMPUTER BOARDS

General						I/O			Memory			
Data Word Size (bits)	Instruction Word Size (bits)	CPU Type	Clock Frequency Min/Max (MHz)	Bus Type	Supply Voltage (V)	No. of Serial Ports	No. of Parallel Lines	Max. Baud Rate (kb/s)	Directly Addressable Words (Kbytes)	Supplied/Extra Capacity RAM (Kbytes)	Supplied/Extra Capacity (P)ROM (Kbytes)	DMA Capability
8	8-32	Z80A	2/4	Multibus	5,-12	1	48	19.2	64	16/64	0/40	
8	8-32	Z80A	2.5	STD		2	72		64	16	8	
8	8-32	Z80A	2.5	STD	5	0	0		64	1/4	8	x
8	8-32	Z80A	2.5/4	STD	5	0	0		64	8	32	x
8	16	Z80A	2.5/6	STD	5, 12	1	24	9.6	64	0/2	0/6	
8	8-32	Z80A	3.68	STD-Z80		1	8		64	64		
8	8-24	Z80A	3.69	Multibus	5, 12	1	48	38.4	64	16	0/8	x
8	8-32	Z80A	4	Proprietary	5, 12	1	0	19.2	32	4/8	0/28	
8	8-32	Z80A	4	Multibus	5, 12	4	2	19.2	64	256	0/32	
8	16	Z80A	4	LSI-11		2	24		64	16	2/24	
8	8	Z80A	4	Q-Bus		2	1	19.2	16	16	0/24	
8	8-32	Z80A	4	Multibus	5,-12	2	24	19.2	64	64	0/96	
8	8-32	Z80A	4	STD	5	1	24	56	64	16/64	0/32	x
8	8-32	Z80A	4	STD	5	1	32	32	64	32		x
8	16	Z80A	4	Multibus	5	1	48	9.6	64	4/8	2/4	x
8	8-24	Z80A	4	Multibus	5, 12	1	48	9.6	64	32/32	4/32	x
8	8-24	Z80A	4	Multibus	5, 12	3	24	9.6	64	32/64	4/32	x
8	8-24	Z80A	4	Multibus	5, 12	2	0	9.6	64	32/64	4/32	x
8	8	Z80A	4	STD	5	2	0	19.2	64	0/64	0/128	
8	8-32	Z80A	4	STD	5	0	0		64	2	8	x
8	4-16	Z80A	4	Proprietary	5,12,28	1	32	9.6	64	16/64	1/14	x
8	8-32	Z80A	4	Proprietary	5,12,28	1	64	9.6	64	64	7/7	
8	8-32	Z80A	4	Proprietary	5,12,28	1	36	9.6	64	64	7/7	x
8	8	Z80A	4	Microboard	5		20		64	2	0/4	
8	8	Z80A	6	Multibus		2	16		16K	32	16	
8	8-16	1802	0.3/2.46	Microboard	5	1	1	19.2	64	2	0/4	x
8	8	1802	0.3/2.46	Microboard	5	1	0	19.2	64	2	0/4	x
8	8-16	1802	2	Microboard	5	1	20		64	4	0/8	x
8	8-16	1802	2	Microboard	5	1	20		64	1	0/8	x
8	8-16	1802	2	Microboard	5	1	1		64	1	0/4	x
8	8-16	1805	0.3/2.46	Microboard	5	1	16	19.2	64	2	0/4	x
8	8-16	1805	2	Microboard	5	1	20		64	4	0/8	x
8	8-16	1805	2	Microboard	5	1	20		64	1	0/8	x
8	8-16	1805	2	Microboard	5	1	16		64	1	0/4	x
8	8-16	1805	2.5	Microboard		1	0		64	2	0/4	x
8	8-24	6502	0.92/1.84	STD	5, 12	2	20	19.2	64	0/40	0/40	x
8	16	6502	1	AIM-65	5	0	72		64	1/4	0/20	

Sequenced alphanumerically by data word size, CPU type and increasing clock frequency.

© IC MASTER 1984

MICROCOMPUTER BOARDS

Software Support									
Assembler	Debug/ Monitor	Editor	High Level Language	Operating System	Hardware Support	Comments	Model	Source	Line
x	x	x	x	x	x	High-speed math processor, 16-level interrupt controller, 6 counter/timers, Multimaster bus arbritration logic, accepts floating-point processors.	ZBC-80	Matrox	
			x	x	x	Cassette interface, video interface, on-board PROM programmer, real-time clock, keyboard interface.	BC2A	ActionIns	
	x				x	Optional external clock input. Three state bus drivers may be disabled for DMA observation. Single 5v operation. Addressable expansion to 116 kbytes.	7803A	Pro-Log	
	x				x	Counter/timer with 6 channels, 2 frequency options single ¢5v operation, DMA compatibility to memory, compatible with all Z80 interrupt modes.	7804	Pro-Log	
	x			x	x	Commercial and industrial packaging option available with PC backplane. Expandable I/O system for communications, display and control.	ST4102	AppMicroTech	5
x	x	x	x	x		Two programmable 8-bit timers, RS272C port with modem control, printer interface.	MDX-CPU3	Mostek	
x	x	x	x	x	x	ROM/RAM shadowing. Battery backup.	BLC-80/316	National	
x	x	x	x	x	x		CCS-1143A	ContLogic	
			x	x	x	On-card video graphics controller	MLZ-VDC	Heurikon	
x	x		x		x	One of 2 serial RS423 ports has full modem control. Optional dialer and automatic calling unit interfaces. Communications protocol software.	PCP-11E	Infosphere	10
	x	x	x	x	x	Programmable communications development and management system for the DEC LSI-11.	PCP-11S	Infosphere	
				x	x	Programmable baud rate generator, two on-board iSBX expansion sockets, on-board memory and I/O management.	PBC-80	Matrix	
	x		x		x	Memory mapping and I/O expansion line, programmable serial port.	MCPU-800	Miller	
	x		x		x	1797 floppy disk controller on board, optional hard disk adapter.	MCPU-900	Miller	
x	x	x		x	x	High-memory industrial controller or low-end computer board.	MSC8001	MonSys	15
x	x	x		x	x	Multimaster logic, PROM memory maps, math chip for floating-point processing.	MSC8004/A	MonSys	
x	x	x		x	x	Multimaster logic and optional APU, single/dual address maps available with custom RAM/ROM and I/O mapping.	MSC8007/A	MonSys	
x	x	x	x	x	x	WD1793 floppy-disk controller on board, optional APU, single/dual address maps available with custom RAM/ROM and I/O mapping.	MSC8009/A	MonSys	
	x			x	x	Z80A-DART and Z80A-CTC provide two RS-232C and four counter/timer channels.	7806	Pro-Log	
	x				x	10 msec. timer w/ interrupt capability. DMA compatibility to external memory. Compatible with Z80 interrupt modes. Addressable exp. to 128 kbytes.	7880	Pro-Log	20
x	x	x	x	x	x	DMA based, multi-density floppy disk controller, 4 counter/timers, PROM programmer, CPU bus available for system expansion.	90F/MPS	Quay	
x	x	x	x	x		PROM programmer, 4 counter/timer channels, CPU bus for expansion.	90MPS	Quay	
x	x	x	x	x		Complete floppy disk controller, single, double, or quad density and PROM programmer on board.	94/MPS	Quay	
x	x	x	x	x	x	CMOS, Centronic printer interface, expandable via universal Microboard backplane.	MB80N	RCA	
x	x		x	x	x	Intended as superviser for multiprocessor system. Communications options.	RSBC-Z80SP	RELMS	25
x	x	x	x	x	x	UART has 14 selectable baud rates. CMOS. High noise immunity, I/O lines on edge connectors, dedicated expandable through universal backplane. Pwred by exp. or I/O connector.	CDP18S602	RCA	
x	x	x	x	x	x	Same as CDP18S602	CDP18S605	RCA	
x	x	x	x	x	x	High noise immunity, I/O lines on edge connectors, CMOS individually programmable and expandable through universal backplane. Powered through exp. or I/O connector.	CDP18S601A	RCA	
x	x	x	x	x	x	See CDP18S601	CDP18S603A	RCA	
x	x	x	x	x	x	High noise immunity. CMOS. I/O lines on edge connectors, expandable through universal backplane. Powered through exp. or I/O connectors. On-board breadboard area.	CDP18S604B	RCA	30
x	x	x	x	x	x		CDP18S607	RCA	
x	x	x	x	x	x	Same as CDP18S601-604 plus additional 22 CPU instructions and on-board counter/timer. CMOS.	CDP18S606	RCA	
x	x	x	x	x	x	See above.	CDP18S608	RCA	
x	x	x	x	x	x	See above.	CDP18S609	RCA	
x	x	x	x	x	x		CDP18S610	RCA	35
x	x	x	x	x	x	Primary serial port is RS232, secondary is TTL simplex. Two 16-bit timer-counters.	ACS15/65	Datricon	
x	x	x	x	x	x	Software compatible with AIM-65.	6500	Cubit	

Bold face indicates additional data is provided on the page noted.

MICROCOMPUTER BOARDS

General						I/O			Memory			
										Supplied/Extra Capacity		
Data Word Size (bits)	Instruction Word Size (bits)	CPU Type	Clock Frequency Min/Max (MHz)	Bus Type	Supply Voltage (V)	No. of Serial Ports	No. of Parallel Lines	Max. Baud Rate (kb/s)	Directly Addressable Words (Kbytes)	RAM (Kbytes)	(P)ROM (Kbytes)	DMA Capability
8	8-24	6502	1			1	0		56	20/4	10.5	
8	8-24	6502	1	Proprietary		1	0		56	4/4	10	
8	17	6502	1	RM65	5	2	52	19.2	128	16/48	4/32	
8	17	6502	1	Proprietary	5	2	16		128	2	0/16	
8	8-24	6502	1	KIM	5	1	51		60	1/4	0/28	
8	19	6502	1/2	Cyberbus	5	0	0		512	0/1	0/2	x
8	8	6502	4	Proprietary	5	1	32	19.2	64	1/2	0/16	x
8	8-24	6512	1	EXORciser	5, 12	1	20		64	3072	0/32	x
8	8-24	68ATX	1	STD	5, 12	2	20	19.2	64	2/40	8/40	x
8	8-16	6800	0.1/1	EXORciser	5,12	1	16	19.2	64	1	1/4	x
8	16	6800	1	STD	5	0	0		64	0/2	0/8	
8	8-24	6800	1	EXORbus	5, 12	1	60		64	1	0/4	x
8	8-24	6800	1	EXORbus	5, 12	1	32	9.6	64	1	0/8	x
8	8-24	6800	1	EXORbus	5, 12	1	8		64	0/10	0/10	x
8	8-24	6800	1	Proprietary	5	1	40	19.2	64	1/2	0/32	x
8	8-24	6800	1	Proprietary	5, 12	2	20	19.2	64	1/2	0/32	x
8	8-24	6800	1	Proprietary	5, 12	1	40	19.2	64	1/2	0/16	x
8	8-24	6800	1	EXORciser	5, 12	1	20		64			x
8	8-24	6800	1	Bus-44	5, 12	1	32	9.6	64	0.5	0/4	x
8	8-24	6800	1	Bus-44	5, 12	1	32	9.6	64	0.5	0/4	x
8	8-24	6800	1/2	STD	5, 12	2	20	19.2	64	2/40	8/40	x
8	8-24	6800	1/2	EXORciser	5, 12	1	32		64	1/4	0/32	
8	8-24	6800	1/2	EXORciser	5, 12	1	32	9.6	64	1/3	0/32	x
8	8-24	6800	2	Proprietary	5	1	40	19.2	64	1/2	0/32	x
8	8-24	6800	4	STD	5	0	0		64	1/4	8	x
8	8-24	6801		DIN	5/12	1	12	9.6	640	12	8	
8	8-24	6801	1	None	12.6 ac	1	16	9.6	2176	0.128	2	
8	16	6802	0.5/1	EXORciser	5, 12	2	40	38.4	56	1.2	6	x
8	8-24	6802	1	EXORbus	5, 12	0	26		64	128	0/4	
8	8-24	6802	1	EXORbus	5, 12	1	26	9.6	64	128	0/4	x
8	16	6802	1	Proprietary		1	32		64	1.4	0/16	
8	8-24	6802	1	Proprietary		1	40		64	0/2	0/8	
8	8-24	6802	1	KIM	5	1	51		60	1/4	0/28	
8	8-24	6802	1/2	Proprietary		0	0		64	0/4	0/32	

Sequenced alphanumerically by data word size, CPU type and increasing clock frequency.

© IC MASTER 1984

MICROCOMPUTER BOARDS

Software Support									
Assembler	Debug/ Monitor	Editor	High Level Language	Operating System	Hardware Support	Comments	Model	Source	Line
x	x		x	x	x	See Superboard II. Nine-digit disk extended Basic and software I/O distribution. RS-232 or cassette interface.	CIPMF	OhioSci	
x	x		x	x	x	Built-in Basic in ROM, machine code monitor, 1 cassette interface, video interface and full keyboard.	SuperboardII	OhioSci	
x	x	x	x		x	Industrial, laboratory, and test equipment applications. Graphics printer and display module available.	A65/40-1000	Rockwell	
x	x	x	x		x	Card cage and variety of expansion boards available. Software can be developed with AIM 65. Available in Euroconnector or edge connector style.	RM65-1000	Rockwell	
x	x	x	x		x	Built-in audio cassette interface, I/O parallel expandable to 71 lines, built-in keyboard display. SM100 comes without this addition.	SYM-1	Synertek	5
x	x	x	x	x	x	On-board vectored interrupt controller and memory-mapped I/O.	1012	Cybersys	
x	x	x	x		x	Provision for on-board power supply, buffers/terminators on parallel lines. RS232,422 or loop serial. Optional CMOS RAM.	CMC65/04	RCIData	
x	x	x	x		x	Complete video interface with separate and composite sync/video outputs. Programmable baud rate.	MBC020-65	Synertek	
			x	x	x	6801 instruction set. Primary serial port is RS232, secondary is TTL simplex. Two 16-bit timer-counters on board.	ACS14/64	Datricon	
x	x	x	x	x	x	Process control software available using PIO algorithm. Firmware-compatible compiler.	DK-6800	Digitek	10
x	x	x	x			Fuse-link PROMs used for memory, I/O and DMA control.	ACS/68	ApplSys	
x	x	x	x	x	x	Crystal-controlled clock, interrupt, DMA, power-on reset, buffered bus, 3 PIAs.	**M68MM01**	**Motorola** (2045)	
x	x	x	x	x	x	Crystal-controlled clock, interrupt, DMA, power-on reset, buffered bus, 2 PIAs.	**M68MM01A2**	**Motorola** (2045)	
x	x	x	x	x	x	Three 16-bit timers, parallel printer I/O interface, buffered bus, 5 sockets for 2K EPROM, ROM or RAM.	**M68MM01D**	**Motorola** (2045,2045)	
x	x	x	x		x	DMA controller, separate on-board/off-board buffers, field programmable gate array device, decode, 8-level vectored interrupt, controller.	CMC68/15	RCIData	15
x	x	x	x		x	Communications version of CMC68/15.	CMC68/15C	RCIData	
x	x	x	x		x	IEEE 488(GPIB) interface, DMA controller, separate on-board, off board buffers, field programmable gate array device decode modem leads.	CMC68/15G	RCIData	
x	x	x	x			Complete video interface with separate and composite sync/video outputs. Programmable baud rate.	MBC020-68	Synertek	
x	x	x	x	x	x	Serial port is programmable to 9600 baud.	**MCL45**	**Wintek** (2062)	
x	x	x	x	x	x	Serial port is programmable to 9600 baud. Single 5V supply.	MCV45	Wintek	20
			x	x	x	Primary serial port is RS232, secondary is TTL simplex. Two 16-bit timer-counters.	ACS-12	Datricon	
					x	Replacement for Motorola's M68MM01A2 with additional capacity. 2-MHz special operation available. Serial communications interface.	MBC01A2	Synertek	
					x	Replacement for Motorola's M68MM01A2 with additional capacity. 2-MHZ special operation available. Four mating connectors.	MBC01A2-1	Synertek	
x	x	x	x		x	2 MHz version of CMC68/15.	CMC68/15B	RCIData	
x	x		x		x	Optional external clock input. Tri-State bus drivers may be disabled for DMA operation. Programmable memory for I/O.	7802	Pro-Log	25
			x	x		Single-board FORTH microcomputer.	TDS900	Stynetic	
x	x	x	x		x	Hardware/software system designed for use as a remote unit for distributed data acquisition and control.	MCC14	Wintek	
	x				x	ACIA, PIA, bit-rate generator, interrupt vector generator, power-failure protect restart triple programmable timers.	CMS-9600A	CreMicro	
x	x	x	x	x	x	Three 16-bit timers, programmable baud rate.	**M68MM01B**	**Motorola** (2045,2045)	
x	x	x	x	x	x	Audio cassette interface, dynamic RAM refresh, buffered bus, 3 16-bit timers.	**M68MM01B1A**	**Motorola** (2045)	30
x	x	x	x		x	Possible complete microcomputer with on-board power supply and RS-422 communications adapter.	CMC68/04A	RCIData	
x	x	x	x				560	SBE	
x	x	x	x		x	Built-in audio cassette interface, I/O parallel expandable to 71 lines, built-in keyboard display.	SYM-1/68	Synertek	
x	x	x			x	Crystal-controlled clock, DMA, power-on reset, mapping PROM for on-board EPROM/RAM, 2 interrupts.	1020	SBE	

Bold face indicates additional data is provided on the page noted.

MICROCOMPUTER BOARDS

General						I/O			Memory			
										Supplied/Extra Capacity		
Data Word Size (bits)	Instruction Word Size (bits)	CPU Type	Clock Frequency Min/Max (MHz)	Bus Type	Supply Voltage (V)	No. of Serial Ports	No. of Parallel Lines	Max. Baud Rate (kb/s)	Directly Addressable Words (Kbytes)	RAM (Kbytes)	(P)ROM (Kbytes)	DMA Capability
8	16	6803	-4.9	STD		1	24	38.4	64	2	0/4	
8	8	6805E2	1	C-44	6.5-18		8	9.6	8	1.19	0/2	
8	8	6808	1/2	Proprietary	5, 12	—	—	19.2	64	1	0/4	x
8	8-16	6808	1/2	Proprietary	5, 12	1	20		64	2048	0/8	
8	8	6808	1/2	Proprietary	5, 12	—	—		64	1	0/4	x
8	16	6809	1	EXORciser	5, 12	2	40	38.4	64	1	6	
8	16	6809	1	Proprietary		2	4		64	0/8	0/12	x
8	8-24	6809	1	EXORbus		2	20		64	0/10	0/20	
8	8-24	6809	1	EXORbus		1	20		64	2	2/14	
8	8-24	6809	1	Proprietary		1	40		64	0/2	0/8	
8	8-24	6809	1	KIM	5	1	51		60	1/3	0/28	
8	8-40	6809	1	Bus-44	5, 12	2	32	9.6	64	2/32	0/64	
8	16	6809	1/2	EXORbus	5, 12	2	40	38.4	1048	2/8	2/32	
8	8-24	6809	1/2	STD	5, 12	1	0	19.2	64	4/40	8/40	x
8	8-24	6809	1/2	Multibus	5	2	48	19.2	64	9	8	x
8	16	6809	1/2	STD	5	1	0	38.4	128	0/8	0/32	
8	8-16	6809	1/2	Multibus	5, 12	1	48	19.2	64	9	0/16	x
8	8-24	6809	1/2	Proprietary	5, 12	1	40	19.2	64	2	0/16	x
8	8-40	6809	1/2	Proprietary		0	0		64	0/4	0/16	
8	16	6809	1.5	Proprietary	5, 12	1	32	19.2	64	1	0/16	
8	8-24	6809	2	EXORbus	5, 12	1	20	28.8	64	2	2/14	x
8	8-32	6809	4	STD	5	0	0		64	2	8	x
8	8	6809	4	Proprietary	5	1	32	19.2	64	1/2	0/16	
8	16	8X300	8	Proprietary	5		4			0.256		
8	12	80C35	0/3	Proprietary	9	1	27	9.6	4	0.25/2	2/4	
8	8	80C85	3	C-44			24		60	2.3	0/2	
8	8-24	8080A	1.02	MCS		0	24		32	1	0/7	
8	8-24	8080A	2	MCS		3	0		32	1	0/7	
8	8-24	8080A	2	Multibus	5	1	48	38.4	64	1/4	0/16	x
8	8-24	8080A	2	Multibus	5, 12	1	48	38.4	64	1	0/4	
8	8-24	8080A	2	Multibus	5, 12	1	48	38.4	64	1	0/8	
8	8-24	8080A	2	Multibus	5, 12	1	48	38.4	64	1/4	32	5, 12
8	8-24	8080A	2	Multibus	5, 12	1	48	38.4	64	1/4	16	5, 12
8	8-24	8080A	2	Multibus	5, 12	1	48	38.4	64	4	0/8	5, 12
8	8-24	8080A	2	Multibus	5, 12	1	48	38.4	64	1/4	32	5, 12
8	8	8080A	2	FlexibusII	5, 12	1	16	9.6	64	1	0/7	x
8	8	8080A	2	FlexibusII	5, 12	1	32	9.6	64	1	0/3	x
8	16	8080A	2.05	Multibus	5, 12	2	48	38.4	64	1/4	0/16	x
8	8-24	8080A	2.05	Multibus		1	48		64	1	0/8	
8	8-24	8080A	2.15	Multibus	5, 12	1	48	38.4	64	4	0/8	x

Sequenced alphanumerically by data word size, CPU type and increasing clock frequency.

© IC MASTER 1984

MICROCOMPUTER BOARDS

Software Support									
Assembler	Debug/ Monitor	Editor	High Level Language	Operating System	Hardware Support	Comments	Model	Source	Line
	x						7911CP3	Matrix	
	x				x	Eight analog input lines, real-time clock, voltage regulator, 27C16 EPROM, 256-bit EEPROM.	CPU-6805A	Onset	
x	x	x	x	x	x	Sockets for two arithmetic processing units, one uncommitted triple 16-bit timer/counter unit, fully buffered bus.	OB8000A	Omnibyte	
x	x	x	x	x	x	M6800 instruction set, on-board decoding for 8 pages of off-board I/O. Addresses are user-defineable. Buffered bus.	OB8002	Omnibyte	
x	x	x	x	x	x	Same as OB8800	OB8900	Omnibyte	5
	x				x	ACIA, PIA, bit-rate generator, interrupt vector generator, power failure protect restart, hardware compatible with CMS 9600A.	CMS-9609	CreMicro	
						On-board DMA controller, three 16-bit timers, automatic-power-fail restart.	DK6809	Digitek	
x	x	x	x	x	x	Can use RAM in ROM sockets.	M68MM17	Motorola	
x	x	x	x	x	x	Three 16-bit timers, DMA buffered bus.	M68MM19	Motorola	
x	x	x	x			Three programmable counter/timers. Crystal-controlled clock, 3 interrupts, power-on reset.	590	SBE	10
x	x	x	x		x	Built-in audio cassette interface, I/O parallel expandable to 71 lines, built-in keyboard display.	SYM-1/69	Synertek	
x	x		x		x	On-board real-time clock interrupt, power-on reset and watchdog timer circuit.	**MCH18**	**Wintek**	**(2062)**
	x			x	x	Resident monitor. Has 2 kbytes of nonvolatile RAM with space for RAM or ROM expansion.	CMS-9619	CreMicro	
x	x	x	x	x	x	Software support is OS9 or Sphere. Serial port is RS232 or RS422 with modem control.	ACS-09	Datricon	
x	x	x	x			Programs 2716, 38E70. Emulates 3870 family, cross-assembler for 8080- and 6800-based systems. On-board keyboard and display.	F68-PEP	Fairchild	15
	x						7911-SP9	Matrix	
x	x	x	x	x	x	ROM, RAM, on-board I/O and off-board I/O addresses are user defineable, 3 16-bit timers, 8 levels of vectored, maskable interrupts.	OB6000	Omnibyte	
x	x	x	x		x	Separate on-board, off-board buffers, field programmable gate array device decode, 3 channel timer, modem control leads, small wire wrap area.	CMC69/15	RCIData	
x	x	x			x	Crystal-controlled clock, DMA, power-on reset, mapping PROM for on-board EPROM/RAM, 3 interrupts.	1010	SBE	
x	x	x	x		x	Provision for on-board power supply, RS-422.	CMC69/04	RCIData	20
x	x	x	x	x	x	Three 16-bit timers, DMA buffered bus.	M68MM19A	Motorola	
					x	10 msec. timer w/ interrupt control. DMA control to external memory. Dynamic RAM refresh clock. Single 5v operation.	7889	Pro-Log	
x	x	x	x		x	Provision for on-board power supply, buffers/terminators on parallel lines, RS232, 422, or loop on serial. Optional CMOS RAM.	CMC69/04A	RCIData	
					x	Single step control, instruction insertion from DIP switches, and Wire-Wrap development area.	8X300KT100SK	Signetics	
x	x	x		x		Has 28-key keypad and 7-digit display. Tutorial and development tool versions.	Concept-48	Intersil	25
	x				x	On-board voltage regulator, 4 interrupts, 27C16 EPROM.	CPU-8085	Onset	
			x		x	Expansion capability without backplane.	MCS80-0013	Bedford	
			x		x	Flexible packaging and cabling.	MCS	Bedford	
x	x	x	x	x	x	Sockets for interchangeable line drivers and terminators, programmable communications interface, single-level interrupt.	iSBC80/10B	Intel	
x	x	x	x	x	x		BLC-80/10	National	30
x	x	x	x	x	x	Extended temperature (-40°C to 85°C) version available.	BLC-80/11	National	
x	x	x	x	x	x	Two BLX connectors for modular expansion	BLC-80/11A	National	
x	x	x	x	x	x		BLC-80/11B	National	
x	x	x	x	x	x	Extended temperature (-40°C to 85°C) version available.	BLC-80/14	National	
x	x	x	x	x	x	Two BLX connectors for modular expansion	BLC-80/14A	National	35
x	x		x	x	x	RS-232, on-board battery	1806A	Xycom	
x	x		x	x	x	RS-232, on-board battery	1810Z	Xycom	
x	x	x	x	x	x	48 individually programmable parallel I/O lines. Available built to MIL883 Standard.	DCS8010A	DistComp	
x	x	x	x	x	x	For severe environmental operation conditions: -55°C to 85°C, 5 G vibration — 5 Hz to 2 kHz, 15 G shock — 11 ms, 0 to 95% humidity.	SECS80/10A	EMM-SESCO	
x	x	x	x	x	x	Programmable USART, two programmable i6-bit BCD and binary timers. Eight-level priority interrupt logic, Multimaster control.	iSBC80/20-4	Intel	40

Bold face indicates additional data is provided on the page noted.

MICROCOMPUTER BOARDS

General						I/O			Memory			
										Supplied/Extra Capacity		
Data Word Size (bits)	Instruction Word Size (bits)	CPU Type	Clock Frequency Min/Max (MHz)	Bus Type	Supply Voltage (V)	No. of Serial Ports	No. of Parallel Lines	Max. Baud Rate (kb/s)	Directly Addressable Words (Kbytes)	RAM (Kbytes)	(P)ROM (Kbytes)	DMA Capability
8	8-24	8080A	2.76	Multibus	5, 12	1	24	38.4	64	16/16	0/8	x
8	8-24	8080AF	2	Proprietary		2			64	1/4	2/8	
8	8-24	8080A-2	2.15	Multibus	5, 12	1	48	38.4	64	4	0/8	x
8	8-24	8080A-2	4.8	Multibus	5, 12	1	48	38.4	64	4/8	0/32	
8	16	8085	3/5	Multibus	5, 12	2	12	19.2	64	0	6	x
8	19	8085	4	Cyberbus	5	0	0		512	0/1	0/2	x
8	16	8085	5	Multibus	5, 12	1	48	38.4	64	6/6	0/16	
8	16	8085A	0.5/5	STD	5	1	0	19.2	64	0.25/2	0/8	
8	8-24	8085A	2	None	5	1	22	1	64	0.25	2/4	x
8	8-24	8085A	2	Multibus	5	1	22	4.8	64	0.5	2/4	x
8	8-24	8085A	2	Multibus	5	1	22		64	0.512	0/8	x
8	8-24	8085A	2.45	Multibus		1	—		64	16	0/16	
8	16	8085A	2.5/5	Multibus	5, 12	1	48		64	4	0/12	
8	8-24	8085A	2.76	Multibus		1	42		64	16	0/8	
8	8-24	8085A	2.76	Multibus		4	10		64		0/8	
8	8-24	8085A	2.76	Multibus	5, 12	4	10	56	64	16	0/8	x
8	8-24	8085A	2,45	Multibus		1	—		64	16	0/16	
8	16	8085A	3	Proprietary	5	1	44		64	1.28	0/4	
8	16	8085A	3	Multibus	5	3	48	19.2	64	4	0/128	
8	16	8085A	3	Proprietary	5	1	44	9.2	64	1.28	0/4	
8	8-24	8085A	3/3.125	STD	5	1	0		64	1/4	8	x
8	16	8085A	3/5	SMP	5	1	16		64	2/10	0/16	
8	16	8085A	3/5	Proprietary	5	3	16	19.2	64	2/10	0/16	
8	8-24	8085A	3.07	Multibus	5	1	48	1	64	2	0/16	x
8	8-16	8085A	5	CAMAC	5, 12	2	16	19.2	64	16/16	0/16	x
8	8-16	8085A	5	Proprietary	5	1	0		64	0.256	0.256	x
8	8-24	8085A	6.144	STD	5	1	0	9.6	64	2	8	x
8	16	8085A-2	2/5	Multibus	5	1	22	9.6	64	0.5/9	0/32	x
8	8-24	8085A-2	2.4/4.8	Multibus	5, 12	1	48	38.4	128	4	0/32	
8	8-24	8085A-2	2.4/4.8	Multibus	5, 12	1	48	38.4	128	8	0/32	
8	16	8085A-2	5	Multibus	5, 12	2	0	19.2	64	64	4/32	x
8	8-32	8088	4.2/5	Multibus	5, 12	1	24	38.4	1000	4/16	0/32	x
8	8-32	8088	4.8	Multibus	5, 12	0	24	38.4	1000	4/4	0/64	x
8	20	8088	5	Multibus	5, 12	4	0	9.6	1000	8	0/16	x
8	16	8088	5	Proprietary	5	4	16	19.2	64	4	0/32	
8	20	8088	5	Multibus	5, 12	2	0	500	1000	64	4/32	x
8	8-16	8748	6.11							64/128	1/2	

Sequenced alphanumerically by data word size, CPU type and increasing clock frequency.

© IC MASTER 1984

MICROCOMPUTER BOARDS

Software Support									
Assembler	Debug/ Monitor	Editor	High Level Language	Operating System	Hardware Support	Comments	Model	Source	Line
x	x	x	x	x	x	Sockets for 8041/8741A interface, 12 levels of programmable interrupt control, RAM battery backup, Multimaster control.	iSBC80/30	Intel	
x	x	x			x	Keyboard, tape cassette interface, 8 digit display.	TK-80A	NEC	
x	x	x	x	x	x	Eight vectored interrupts, 3 on-board timers, multi-processor capability, RAM and ROM can share same address space, battery backup logic.	BLC-80/204	National	
x	x	x	x		x	Two programmable 16-bit BCD and binary timers, eight-level programmable interrupt control, memory protected.	iSBC80/24	Intel	
x	x					Has both 8085 and 8088 processors, only one of which operates at a time. Optional battery-backed calendar clock, math chip.	8108	ETIMicro	5
x	x	x	x	x	x	CPU card, 2 or 4 MHz clock is switch-selectable.	1085	Cybersys	
x	x	x	x	x	x	Includes CRT display controller and ASCII keyboard input port.	MC85	Comark	
x	x	x	x		x	Memory and peripheral I/O cards are available for systems.	ACS/80	ApplSys	
x	x	x	x		x	Sockets for 4K bytes of EEPROM. Four-level vectored interrupt, sockets for 4K bytes of EEPROM. TTL serial I/O interface. Multimaster control.	iSBC80/04	Intel	
x	x	x	x		x	Programmable 14-bit timer, four-level vectored interrupt, TTL serial I/O interface, Multimaster control.	iSBC80/05	Intel	10
x	x	x	x	x	x	Four vectored interrupts, on-board timer, multiprocessor capability.	BLC-80/05	National	
					x	Accepts low-level signal down to 10 mV.	DT3754	DataTrans	
x	x		x	x		Seven CPU boards in series. DS board has math processor and 12 interrupt inputs.	AMSSeries	Siemens	
					x	For severe environmental operation conditions: -55°C to 85°C, 5 G vibration — 5 Hz to 2 kHz, 15 G shock — 11 ms, 0 to 95% humidity.	SECS80/30	EMM-SESCO	
					x	Has both 8085 and 8088 processors, only one of which operates at a time. Optional battery-backed calendar clock, math chip.	SECS80/544	EMM-SESCO	15
x	x	x	x	x	x	Four-channel communications computer or intelligent slave for communications expansion. Twelve levels of programmable interrupt control.	iSBC544	Intel	
					x	Accepts high-level analog inputs to 10V.	DT3752	DataTrans	
	x					256 bytes of CMOS RAM battery backup. SMP-80 is Eurocard version.	SKC-85	Siemens	
x	x	x	x	x	x		AMS-D11	Western	
	x						SKC-85	Western	20
x	x		x		x	Optional external clock input. Tri-State bus drivers may be disabled for DMA operation. Addressabel words expandable to 116K bytes.	7801	Pro-Log	
x	x		x	x		Seven CPU board versions with 8080, 8085, or 8088 CPUs.	SMPSeries	Siemens	
x	x	x	x	x	x		SMP-E6	Western	
x	x	x	x	x	x	Three sockets for distributed digital I/O processing, 12 levels of programmable interrupts, three programmable counters.	iSBC569	Intel	
x	x	x	x	x	x	Three real-time clocks, 28 interrupt sources, optional hardware math package. System is designed for process-control applications.	3885-ZIA	KineticSys	25
					x	Milertronics will do programming and interfacing, if desired.	PDC-102	MilerTron	
	x				x	10 msec. timer w/ interrupt control. Control port for memory expansion. RS232C interface for CRT terminal. Selectable DTE/DCE configuration.	7885	Pro-Log	
x	x	x	x	x	x	Software-transparent to Intel SBL90/05, has three SBX connectors, fast-mode selection for CPU clock, needs 12V for RS-232.	ZX-80/15	Zendex	
	x	x	x	x	x		BLC-80/24	National	
	x	x	x	x	x		BLC-80/28	National	30
x	x	x	x	x	x	Hardware and software-compatible with Intel Series II IPC-85. Runs all development systems.	ZX-85	Zendex	
x	x	x	x	x		See iSBC86/14. ROM/PROM expandable to 64K bytes with iSBC 341 Multimodule.	iSBC88/25	Intel	
x	x	x	x	x	x	Measurement and control computer. On-board A/D converter, 3 iSBX connectors, 3 programmable timers, 4 EPROM sockets.	iSBC88/40	Intel	
x	x	x	x	x	x	Intended as coprocessor for DCS 86/16 or as 8-bit processor for Multibus systems. Three timers.	DCS86/8	DistComp	
x	x	x	x	x	x		SMP-E8	Western	35
x	x	x	x	x	x	Convertible to ZX-85. Runs CP/M-86.	ZX-88	Zendex	
							IMC100	MCC	

Bold face indicates additional data is provided on the page noted.

MICROCOMPUTER BOARDS

General						I/O			Memory			
										Supplied/Extra Capacity		
Data Word Size (bits)	Instruction Word Size (bits)	CPU Type	Clock Frequency Min/Max (MHz)	Bus Type	Supply Voltage (V)	No. of Serial Ports	No. of Parallel Lines	Max. Baud Rate (kb/s)	Directly Addressable Words (Kbytes)	RAM (Kbytes)	(P)ROM (Kbytes)	DMA Capability
8/16	8,16	INS8070	4	STD	5	1	0	4-8	64	1/8	2/24	
8/16	8,16	INS8070	5	STD	5	2		19.2	96	8/32	16/32	
8/16	8,16	INS8073	4	Proprietary	5	1	24	4.8	64	4	2/6	
8/16	8,16	INS8073	4	Proprietary	5	1	19	4.8	64	4	2/6	
8/16	8,16	INS8073	4	Proprietary	5	1	47	4.8	64	4/24	4/22	
8/16	8,16	INS8073	8	Proprietary	5	1	53	9.6	64	8/20	16/10	
8-16	8	F387X	2	F8		1			64	2/4	2	
12	12	6100	0/2	Proprietary	4.5-7	0	18		384	0	0	
12	12	6100	0/2.46	Proprietary	4.5-7	0	32		48	4	12	x
12	12	6100	5.7	Proprietary	4.5-7	1	24	9.6	4	0.256	1/1	x
16	16			LSI-11					32	0/64	0/64	
16	16		2	Micro Nova	5, 12	1			32			
16	16		2	Proprietary	5, 12	1	0	19.2	256	256/0	0/0	
16	16	AMZ8002	4	Multibus		2	24		512K	32K/0	0/8K	
16	18	Bit Slice		—	5, 12	1	0		64	128/4M	0/32	x
16	16-32	Custom	4	Scout-bus	5		16/32		128	0	0	x
16	16-32	Custom	4	Maxi-bus	5, 12		32		128	2/6	0/6	x
16	16	Custom	8.3	Proprietary	5	1			32	0	0	
16	16	F11		LSI-11					2M	0/4M	0/4M	
16	16	F9445	16/20	Multibus		2	32		64	8	0/32	
16	16	J11	15	Q-Bus	5				4000	8		
16	16	mN602	8.3	Proprietary	5, 12	2	16	19.2	20	8/0	0/16	x
16	16	mN602	8.3	Proprietary	5, 12	2	16	19.2	32	16/0	0/16	x
16	16	mN602	8.3	Proprietary	5, 12	1		19.2	32	0	0	x
16	24	NS16032	10	Multibus		1	24		16000	32/128	1/8	
16	15	TMS9900	3	Proprietary	5, 12	1	16	19.2	64K	0	0	
16	16	TMS9900	3	Proprietary	5, 12	1	16	19.2	64K	2/4	2/8	x
16	16	TMS9900	3	Proprietary	5, 12	1	16	19.2	64K	2/4	2/8	x
16	16	TMS9900	3	TM990	5, 12	1	16	19.2	64K	0/128	4/16	x
16	16	T11	4.91	Q-Bus	5, 12	2	24	38.4	64			
16	16	T11	7	Q-Bus	5, 12	3	30	76.8	64			x
16	16	T-11	4.91	LSI-11	5, 12	2	4		64	4/8	0/32	x
16	16-32	WD9000	2.5	Internal	5, 12	2	24	19.2	128K	64	0	x
16	8-32	WD90008	3	Internal	5, 12	2		19.2	64K			x
16	16	Z8001	2.5/3.9	Proprietary	5, 12	2	32	19.2	16M	32/48	4/16	x
16	16	Z8001	4	FlexibusIII		2	0		100K	20	16	
16	16	Z8001	4	Proprietary	5	2	32		16	16/16	4/4	
16	16	Z8002	4	Multibus		2	24			128/0	0/16	
16	16	Z8002	4	Proprietary	5	2	32		16	16/16	4/4	
16	32	68000	2	VERSAbus		2	60		16000	16	8/64	
16	16	68000	4/8	S-100	8				16M	0	0	
16	8-32	68000	8	VME	5, 12	3	24	38.4	16Mb	128	16/64	

Sequenced alphanumerically by data word size, CPU type and increasing clock frequency.

© IC MASTER 1984

MICROCOMPUTER BOARDS

Software Support									
Assembler	Debug/ Monitor	Editor	High Level Language	Operating System	Hardware Support	Comments	Model	Source	Line
x	x	x	x		x	STD Bus controller with cambasic, EPROM programmer, bit, BCD, byte, 16-bit commands. Development software, Tiny Basic.	SYS-10A	Octagon	
x	x	x	x		x	Similar to SYS-10 with 2 serial ports. One port has full modem handshake capability.	SYS-11A	Octagon	
x	x	x	x		x	Microcontroller, EPROM programmer, digital I/O, Tiny Basic.	SYS-1	Octagon	
x	x	x	x		x	Same as SYS-1A with 4-channel, 12-bit A/D converter, 500 mA, 50 V outputs.	SYS-2A	Octagon	
x	x	x	x		x	Same as SYS-1 with 8 channel, 8 bit A/D, D/A output, high current drivers, EPROM and EEPROMs.	SYS-3A	Octagon	5
x	x	x	x		x	Same as SYS-3A with more memory capability and three 16-bit counter/timers.	SYS-4B	Octagon	
x	x	x	x	x	x	Includes teletypewriter operating system and programmable baud rates.	**F3870-PEP**	**Fairchild** (1456)	
x	x		x	x		Similar to LP-12 but omits on-board memory. Addresses 32K words of external memory.	LP-12P	ICC	
x	x		x	x		CMOS. Two-latched 12-bit ports and two 4-bit ports.	LP-12	ICC	
x	x	x	x	x	x	Keyboard, 2 4-digit LEDs on card.	InterceptJr.	Intersil	10
							LSI-11/2	DEC	
	x	x	x	x			8737	DataGen	
x	x	x	x	x	x	Also available as complete system	S/20	DataGen	
						5 programmable counter/timers; vectored maskable and nonmaskable interrupts.	**AM96/4116A**	**AMD** (2001)	
x	x	x	x	x	x	Supports Database Management Package, Graphics Package, Networking Capabilities.	2106BK	HP	15
x	x	x	x	x	x	Isolite auto self test, floating point option, real-time clock. Hardware multiplication and division.	NM4/04	CompAuto	
x	x	x	x	x	x	Floating point option, real-time clock, 8 channels of I/O from on-board I/O distributor. Intelligent cable interfaces, Pasal.	NM4/10	CompAuto	
x	x	x	x	x	x	Memory and I/O device communicate with two independent buses.	MP/200	DataGen	
							LSI-11/23	DEC	
x	x		x	x		Prototyping evaluation and programming board, on-board EPROM programmer, ±12V supply used for P-S-232C operation only, 25V supply for EPROM programming only.	**PEP-45**	**Fairchild** (1910)	20
x	x	x	x	x	x	CPU board based on J11 CMOS microprocessor.	LSI-11/73	DEC	
x	x	x	x	x	x	Programmed priority interrupts. Fortran, Pascal, Basic. MP/OS operating system.	MBC/2	DataGen	
x	x	x	x	x	x	Programmed priority interrupts. Fortran, Pascal, Basic. MP/OS operating system.	MBC/3	DataGen	
x	x	x	x	x	x		MP/100	DataGen	
x	x	x	x	x	x		DB16000	National	25
x	x	x	x	x	x		CPU201	TauZero	
x	x	x	x	x	x	Two interval timers.	TM9900/100MA	TI	
x	x	x	x	x	x	Three interval timers.	TM9900/101MA	TI	
x	x	x	x	x	x	Memory mapped address space to 1M bytes.	TM9900/102	TI	
x	x		x	x	x	Supported by RT-11, Micropower Pascal.	KXT11-AB	DEC	30
x	x		x	x	x	Two serial lines are programmable synchronous/asynchronous. Up to 14 units can operate as peripheral processors on a single Q-Bus.	KXT11-C	DEC	
x	x		x	x	x	Has full instruction set of PDP-11.	SCB11/21	DEC	
x		x	x	x		Single board Pascal Micro Engine, 64K bytes on-memory expansion board.	WD0900	Western	
	x	x	x	x	x	Includes floppy disk controller, DMA, switch selectable for single or double density. Standard or mini-size up to 4MB storage. Baud rate selectable.	WD/900	Western	
x	x	x	x	x	x		05-6168-01	Zilog	35
x	x	x	x		x		1868¢A	Xycom	
x	x	x	x	x	x	Development module for evaluation and debugging of Z8000-based systems.	**Z8001DM**	**Zilog** (1741)	
						5 programmable counter/timers.	**AM96/4126**	**AMD** (2001)	
x	x	x	x	x	x	See above.	**Z8002DM**	**Zilog** (1741)	
	x		x				VMC68K/15	National	40
x	x	x	x	x	x	Dual processor unit, 8 MHz 68000 and 4 MHz Z-80A, 32-bit wide architecture, software-controlled switching.	**DPU**	**Cromemco** (2008)	
x	x	x	x		x	User EPROM area, selectable baud rates, programmable real-time clock, 7 interrupt levels.	SYS68K/CPU-1	Force	

Bold face indicates additional data is provided on the page noted.

MICROCOMPUTER BOARDS

General						I/O			Memory			
										Supplied/Extra Capacity		
Data Word Size (bits)	Instruction Word Size (bits)	CPU Type	Clock Frequency Min/Max (MHz)	Bus Type	Supply Voltage (V)	No. of Serial Ports	No. of Parallel Lines	Max. Baud Rate (kb/s)	Directly Addressable Words (Kbytes)	RAM (Kbytes)	(P)ROM (Kbytes)	DMA Capability
16	8-32	68000	8	Multibus		12	2		16Mb	1M/16M	32	
16	16	68000	8	VERSAbus	5, 12	2		19.2	16Mb	32/128	0/64	x
16	8-32	68000	8	EXORciser	5, 12	2	32	9.6	16Mb	32	8/64	
16	16	68000	8	VMEbus	5, 12	1		9.6	16Mb	0/64	0/128	x
16	16	68000	8	VERSAbus	5, 12	2	40	9.6	16Mb	32/64	0/64	x
16	8-32	68000	8	VMEbus	5, 12	2	16	38.4	16Mb	8/0	0/48K	x
16	16-64	68000	8/10	Multibus	5, 12	4	8	19.2	16Mb	0.256/16	0/64	x
16	16-80	68000	10	Multibus		2	32		16Mb	32/128	0/92	
16	15	74S481	5	TMS990	5, 12	1	0	19.2	64	0	0	x
16	8-48	8080A	5	Multibus		1			1000		0/32	
16	20	8086	2.5/5	Proprietary	5	1	48	4.8	1000	2/4	8	x
16	8-48	8086	4.92	Multibus		1	24		1000	32/64	0/64	
16	8-40	8086	5	Multibus		2			1000		0/32	
16	8-48	8086	5	Multibus	5, 12	1	24	38.4	1000	32/32	0/16	x
16	8-48	8086	5/8	Multibus	5, 12	1	24	38.4	1000	8/16	0/32	x
16	16-40	8086	5/10	Multibus	5, 12	3	24	1000	1000	2/12	0/16	
16	8-32	8086	5/10	Multibus	5, 12	1	24	38.4	1Mb	32/128	0/32	x
16	20	8086	5/10	Multibus	5, 12	2	24	38.4	1000	8/16	0/64	x
16	20	8086	8	Multibus	5	3	48	19.2	64	8	0/32	
16	20	8086-2	5/8	Multibus	5, 12	1	24	38.4	1000	32/64	0/128	x
16	20	8086-2	5/8	Multibus	5, 12	1	24	38.4	1000	128/256	0/128	x
16	8-48	8086-2	5/8	Multibus	5	1	24	9.6	1000	8K	0/128	x
16	16	9440	12	NOVA		2	8		32	32	4	
16	16	9440	8/12	Proprietary		1	0		32	4	2	
16/32	16-80	68000	10	Multibus		2	32	19.2	16M	128/0	0/192	
16/32	16-80	68000	10	Multibus		2	32	19.2	16M	32/0M	0/192	
16/32	16-80	68000	10	Multibus		2	24		16M	128/128	0/64	
16/32	16-80	68010	10	Multibus		2			16M	4	0/32	x

Sequenced alphanumerically by data word size, CPU type and increasing clock frequency.

© IC MASTER 1984

MICROCOMPUTER BOARDS

Software Support									
Assembler	Debug/ Monitor	Editor	High Level Language	Operating System	Hardware Support	Comments	Model	Source	Line
							MK68	Heurikon	
x	x	x	x	x		Shared RAM permits DMA operation with VERSAbus intelligent peripheral controller modules. Has local 8-bit I/O bus and three 16-bit timers.	M68KVM02	Motorola (2042)	
x	x	x	x	x	x	3 16-bit timers, user Wire Wrap area, 6 prioritized interrupt levels.	MEX68KDM	Motorola	
				x	x	Supports I/O channel for large variety of peripheral and I/O functions.	MVME110	Motorola (2041)	
x	x	x	x	x		Programmable timer/counter VERSA bus interface, system controller functions include bus arbitration, system interrupt processing, test signal, and self-test.	VERSAmodule	Motorola	5
x	x		x	x		CPU module, optional memory management unit, programmable real-time clock, 7 levels of interrupt.	SMVME2000	Signetics (2052)	
x	x	x	x	x	x	On card 4 channel DMA hard disk and streaming tape interface, BYTE-swap buffer, twin expansion connectors, and memory management unit	HK-68A	Heurikon	
x	x	x	x	x	x	ROM, RAM, on-board I/O and off-board addresses user defineable. Contains 3 16-bit timers and 7 levels of vectored interrupts.	OB68K1A	Omnibyte	
x	x	x	x	x	x	High performance CPU module software compatible with 100MA or 101M. Supports floating point and extended integer arithmetic instructions.	TM990/1481	TI	
x	x	x	x	x	x	For severe environment: operating temperature 55° to 85°C vibration 5g 5 Hz to 1kHz, meets MIL-E5400, 16400, and 4158.	SECS86/05	EMM-SESCO	10
x	x	x	x	x	x		SDK-86	Intel	
x	x	x	x	x	x	2 BLX connectors	BLC-86/1213	National	
				x		Two programmable timers, nine level vectored priority interrupts.	SECS80/86	EMM-SESCO	
x	x	x	x	x	x	Two programmable timers, nine-level vectored priority interrupts, ROM/PROM expandable to 64K with iSBC Multi-Module.	iSBC-86/12A	Intel	
x	x	x	x	x	x	Two programmable timers, nine-level vectored priority interrupts, ROM/PROM expandable to 64K with iSBC Multi-Module.	iSBC-86/05	Intel	15
x	x	x	x	x		Three serial I/O channels. Two allow use of high-level bit protocols.	DCS86/16	DistComp	
x	x	x	x	x	x	Two programmable timers, programmable interrupt controller, ROM/PROM expandable to 32K bytes on board.	MBC-86/12A	Matrox	
x	x	x	x		x		ZX86	Zendex	
x	x	x	x	x			AMS-DB	Western	
x	x	x	x	x	x		iSBC-86/14	Intel	20
x	x	x	x	x	x		iSBC-86/30	Intel	
	x	x	x		x	2 BLX connectors	BLC-86/05	National	
x	x	x	x	x	x	Compatible with industry standard 15" x 15" I/O controllers. Up to 8K bytes of program autoload PROMS. Memory control and parity logic.	GLOW-16	Fairchild	
x	x		x	x		Nova instruction set, PROM resident entry and debugging program. Up to 4 I/O controller boards memory expansion to 64K bytes.	SPARK-16	Fairchild	
x	x	x	x	x	x	See above.	OB68K1A-128	Omnibyte	25
x	x	x	x	x	x	Software definable 16-bit parallel ports, 3 16-bit timer/counters, 8 sockets for up to 64K bytes of EPROM.	OB68K1A-32	Omnibyte	
							M68K10	SBE	
x	x	x	x	x	x	Multi-user CPU board. Memory management capability, calendar/clock.	OB68K/MMU	Omnibyte	

Bold face indicates additional data is provided on the page noted.

Supported System	Manufacturer	Function	Part Number	Source	For Additional Data, See Page
BLC-80/— Series	National	Analog I/O	BLC-8737	National	
		I/O Expansion	BLC-508 BLC-517 BLC-519 BLC-8534 BLC-8538		
		I/O Memory Expansion	BLC-104 BLC-116		
		Memory	BLC-8016 BLC-048 BLC-064 BLC-064A/128 BLC-0128(A/B) BLC-0128A/64 BLC-0256(A/B) BLC-300 BLC-0512(A/B) BLC-8048(A) BLC-8064(B) BLC-8302 BLC-416 BLC-8432 BLC-464		
		Peripheral Controllers	BLC-8222 BLC-8224 BLC-8228 BLC-8229 BLC-8230 BLC-8232 BLC-8488 Note: A = Parity B = ECC		
C-44	Onset	A/D, 12-Bit	MOR-800	Onset	
		A/D, 32-channel	ADC-32		
		Data Logging 64Kb	DS-64		
		Floppy Disk Controller	DDC-35		
		LCD Interface with Votrax Speech chip	KDT-16		
		Parallel Port, 40-Line	PAR-40		
		RAM, 16Kb	MEM-88		
		RAM, 64Kb	MEM-64		
CPU201/206	Tau Zero	A/D Module	CIF520 CIF521 CIF522	Tau Zero	
		Analog Multiplexer	CIF515		
		D/A Module	CIF530		
		Dual Port Memory	MEM250		
		Floppy Disk Controller	MEM290		
		IEEE 488 Interface	MEM280		
		Incremental Encoder Interface	MEM270		
		I/O Expansion	CIF600		
		I/O, 32 Inputs, 32 Outputs	CIF560		
		Optocoupled Input, 32-Bit	CIF403 CIF404 CIF405		

© IC MASTER 1984

Supported System	Manufacturer	Function	Part Number	Source	For Additional Data, See Page
CPU201/206 (cont.)	Tau Zero	Optocoupled Output, 16-Bit	CIF442 CIF443		
		Optocoupled Output, 32-Bit	CIF420		
		Optocoupled NAMUR Input	CIF410		
		Optocoupled AC Input, 220V	CF461		
		Optocoupled Latched Input, 16-Bit	CIF500		
DK6800	Digitek	DMA Controller	DK6844	Digitek	
		EPROM/RAM (64K)	DK6815A		
		Floppy Disk Controller	DK6843		
		Hard Disk Interface	DK6842		
		Modem, 300 Baud	DK6852		
		Modem, 1200 Baud	DK6853		
		Triple Serial Interface	DK6850		
Micro Board Universal Bus (CMOS)	RCA	A/D or D/A Converters	CDP18S642-44 CDP18S647-48 CDP18S654 CDP18S657-58	RCA	
		Digital I/O	CDP18S640A, A1 CDP18S646 CDP18S650-52 CDP18S660 CDP18S662-63		
		Floppy Disk Controller	CDP18S651		
		Memory	CDP18S620-622 CDP18S623A CDP18S625-632		
		Peripheral Interface	CDP18S661B CDP18S661V3		
		Serial Interface/ Modem	CDP18S641B CDP18S653V1, V2, V3, V4		
		Timer	CDP18S650/655		
EXORbus	Motorola	Digital I/O	9620A 9622 9650A 9657 96103	Creative Micro Systems	
		Floppy Disc Controller	9671		
		Memory	9616 9635/9636/9637A 9634/9638 9670		
		Programming Heads	9614/9617/9618		
		Prototyping	9610/9612		
		Relay	96702		
		Timers	9640A 9661		
EXORbus	Motorola	Memory	M68MM04, 04A M68MM06 M68MM09 M68MM21, 21-1 MEX6808-22 MEX6816-1HR, -22D, -22S MEX6832-1HR, -22 MEX6848-1HR, -22 MEX6864-1HR, -22 MEX68RR	Motorola	2046 2046 2046 2046 2046 2046 2046 2046 2046 2046

Supported System	Manufacturer	Function	Part Number	Source	For Additional Data, See Page
EXORciser Micromodule bus	Motorola	Memory	MBC016D MBC032D MBC048D MBC064D	Synertek	
iLBXbus	Intel	Memory/Multibus	iSBC428	Intel	
		Multichannel to iLBXbus	iSBC580		
iSBXbus	Intel	Analog Input Module	iSBX311	Intel	
		Analog Output Module	iSBX328		
		Bubble Memory	iSBX251		
		Disk Controller, Flexible	iSBX218		
		Bit Serial Communication	iSBX352		
		EPROM Module	iSBC341		
		GPIB Module	iSBX488		
		Math, Fixed/ Floating Point	iSBX331		
		Math, Floating Point	iSBX332		
		Numeric Data Processor	iSBC337		
		Parallel I/O	iSBX350		
		Parity Module	iSBC303		
		Memory	iSBC301 iSBC302 iSBX304		
		Serial I/O	iSBX351		
		Video Display Controller	iSBX270 iSBX275		
LSI	DEC	Analog I/O Subsystems	RTI-1250 RTI-1251 RTI-1252	Analog Devices	
LSI-11, -11/2 PDP-11/23	DEC	A/D or D/A	ST-LSI ST-LSI2 ST-728	Datel	2039 2039 2039
LSI-11 PDP-11 VAX	DEC	Memory	TMM10010 TMM20000 TMM30000	TI	
MA2800	National	Base Plane and Power Supply	MA2000	National	2047
		RAM	MA2016		2048
		RAM/UV PROM	MA2732		2050
		Serial Interface	MA2232		2049
M68MM01 Monoboard CPU	Motorola	D/A Converters	M68MM05C M68MM15CV M68MM15CI	Motorola	2045 2045 2045
		A/D Converters	M68MM15A, A1, B, BEX		2045
			M68MM05A, B		2045
		ACIA Module	MEX6850, 50-2		2046
		GPIB	M68MM12, 12A, 12-1		2046
		24 Channel Optoisolator	M68MM13C, D		2046
		Memory	MEX6815-3		
		Memory Expansion	M68MM16-1, -2, -3		2046

© IC MASTER 1984

Supported System	Manufacturer	Function	Part Number	Source	For Additional Data, See Page
M68MM01 Monoboard CPU (cont.)		Parallel Interface Adapter	M68MM22		2046
		Expansion Module	M68MM03		2046
		PIA I/O	MEX6820, 21-2		2046
		16/32 Relay Output	M68MM13A, B		2046
		RS232C to TTY Adaptor	M68MM11		2046
		Serial I/O	M68MM07 M68MM18		2046 2046
Micromodule Bus	Motorola	Analog I/O Subsystems	RTI-1230 RTI-1231 RTI-1232	Analog Devices	
Micromodule Bus	Motorola	A/D Module	M68RAD1	Motorola	2044
		Analog Input	MVME600		2044
		Analog Output	MVME605		2044
		Magnetic Tape Adapter	MVME435		2044
		Opto Isolated I/O Modules	MVME610/615/616 MVME620/625		2044 2044
		Parallel Port	MVME410		2044
		Remote I/O	M68RI01		2044
		RS232 Port	MVME400		2044
		SASI Bus Interface	MVME420		2044
		Winchester Controller	M68RWIN1-1, -2		2044
Micromodule,	Motorola	Analog I/O	MP7104 MP7105 MP7208 MP7216 MP7218 MP7408 MP7532 MP7432 MP7504 MP7608	Burr-Brown	
System 65	Rockwell	Digital I/O	MP701 MP702 MP710		
Multibus	Intel	AmZ8000 Evaluator	AM96/4018	AMD	2005
		Serial SBX	AM94/1530		2005
		Stepper Motor Controller	AM94/1541		2005
		SBX Motherboard	AM94/2000		2005
		Floppy Disk Controllers	AM95/6120		2004
		Memory	AM96/5232 AM97/0064 AM97/0128 AM97/0256 AM97/0512 AM97/000B AM97/0343		2004 2003 2003 2003 2003 2003 2003
		RAM/EPROM/ I/O	AM96/5232		2004
Multibus	Intel	Analog I/O Subsystems	RTI-1200 RTI-1201 RTI-1202	Analog Devices	
Multibus	Intel	A/D or D/A	ST-711 ST-711RLY8D ST-711RLY16D ST-716 ST-732	Datel	2039 2039 2039 2039 2039

Supported System	Manufacturer	Function	Part Number	Source	For Additional Data, See Page
Multibus	Intel	Analog I/O	CBC8730 Series	Diversified Technology	
		Memory	CBC064		
		Memory and I/O	CBC104 CBC108 CBC116		
Multibus	Intel	Bubble Memory Cartridge Tape Drive	iSBC254 iSBC217	Intel	
		Communications Expansion	iSBC534		
		Data Communications Processor	iSBC88/45		
		Digital Controller	iSBC569		
		Diskette Controller	iSBC204		
		Disk Controllers	iSBC208 iSBC215X iSBC218 iSBC220		
		EPROM Expansion	iSBC340 iSBC416 iSBC464		
		Ethernet Controller	iSBC550		
		I/O Expansion	iSBC517 iSBC519		
		Intelligent Communications Controller	iSBC544		
		Intelligent DMA Controller	iSBC589		
		Mathematics, High Speed	iSBC310		
		Memory	iSBC012B iSBC016A/028A/032A/056A/064A iSBC064 iSBC090 iSBC094 iSBC464		
		Memory/iLBX	iSBC012CX iSBC028CX iSBC056CX iSBC428		
		Memory and I/O Expansion	iSBC108A iSBC116A iSBC208A		
		Multichannel to iLBX Bus	iSBC580		
		Speech Transaction	iSBC576 iSBC577		
		Optically Isolated I/O	iSBC556		
		RAM/EPROM Expansion	iSBC300		
		Video Display Controller	iSBC270		
Multibus	Intel	Memory	RMEM256K-DE RMEM64K-D RMEM16K-BES	Relms	
		Communications GPIB and Serial I/O	RMEM-CLB		
Multibus	Intel	Memory, Dual Port to SAMbus	SAM-DRAM	SGS	
Multibus	Intel	Non Volatile RAM Memory	NVR8010	Stynetic Systems	

© IC MASTER 1984

Supported System	Manufacturer	Function	Part Number	Source	For Additional Data, See Page
Multibus	Intel	Memory	TMM40010	TI	
Multibus	Intel	Winchester Floppy Disk Controller	WD1002-MTB	Western Digital	2060
Multibus, SBC80, BLC80	Intel National	Analog I/O	MP8304 MP8305 MP8316 MP8418 MP8608 MP8616 MP8632	Burr-Brown	
Multibus, SBC80, BLC80	Intel National	Digital I/O	MP801 MP802 MP810	Burr-Brown	
SASI	Shugart	Winchester Disk Controller	WD1002-SHD	Western Digital	2058
Q-Bus	DEC	Serial Communications Controller	DLPV11		
SAM-BUS	SGS	Memory, Dual Port to Multibus	SAM-DPRAM	SGS	
S100 Bus	Cromemco	Analog I/O	D+7A I/O	Cromemco	2023
		A/D Converter	ADC-12		2025
		D/A Converter	DAC-12		2024
		C-Bus Interface	CSP		2022
		Digital I/O	4PIO 8PIO IOP GPIB TU-ART QUADART OCTART		2028 2029 2018 2031 2030 2019 2016
		Printer Interface	PRI		2032
		Color Digitizer Board	SDD		2036
		Floating Point Processor	FFP		2011
		Floppy Disk Controller	64FDC		2027
		Color Graphics	SDI		2034
		Hard Disk Interface	SMDI		2017
		Memory	32KBS 48KTP 64KZ-II 256KZ 512MSU MCU		2012 2035 2013 2014 2015 2015
		Terminal Interface	CTI		2033
		Network Interface Board	CNI		2020
		Winchester Disk Interface	WDI-II		2026
Series/800 CIMBUS	National	Digital I/O	CIM-210 CIM-220 CIM-510 CIM-311	National	
		Memory Expansion	CIM-100/104/108		
		Serial I/O	CIM-201 CIM-203		
		CIMBUS/ Distributed I/O Bus Interface	CIM-230		
		Analog Input	CIM-411		
		Analog Output	CIM-421		

© IC MASTER 1984

Supported System	Manufacturer	Function	Part Number	Source	For Additional Data, See Page
STD Bus	Mostek, Pro-Log	Analog I/O Subsystems	RTI-1225 RTI-1226 RTI-1260 RTI-1262	Analog Devices	
STD Bus	Mostek, Pro-Log	A/D or D/A Converter	STD081 STD139	Micro Link	
		Calculator	STD102		
		Calendar/Time	STD074		
		Controller	STD141		
		CRT Controller	STD098		
		Development Card	STD130		
		Event Counter	STD081		
		Floppy Disk	STD101		
		Keyboard Controller	STD072		
		MODEM	STD138		
		Opto Isolator	STD100		
		Output Driver	STD140		
		Printer Controller	STD096		
		PROM Programmer	STD114		
		TTL I/O card	STD129 STD134		
		USART	STD073 STD135 STD136		
STD Bus	Mostek Prolog	A/D Converter	5040 5043 5340	STD Microsystems	
		Bus Monitor	5028		
		Clock/Calendar	5050 5350		
		Counter/Timer	5052 5352		
		D/A Converter	5030 5033		
		DMA Conrtoller	5360		
		Floppy Disk Controller	5064 5065 5364		
		IEEE 488 (GPIB)	5088 5388		
		Interrupt Controller	5059		
		Memory	5006 5007 5008 5009		
		Parallel/Serial I/O	5082 5374 5384 5382		
		SCSI Host Adapter	5086 5386		
		Serial I/O	5070 5370 5373		
STD Bus	Mostek, Pro-Log	Memory	DR8030 DR8068 NVR8020	Stynetic Systems	
		I/O, Counter, Timers, up to 46Kb PROM	MF8040		

© IC MASTER 1984

Supported System	Manufacturer	Function	Part Number	Source	For Additional Data, See Page
TM990	TI	Analog I/O Subsystems	RTI-1240 RTI-1241 RTI-1242 RTI-1243	Analog Devices	
TM990	TI	Digital I/O Module	TM990/310	TI	2055
		48 TTL I/O Lines	TM990/310		2055
		48 TTL I/O 24 mA Lines	TM990/311		2055
		Asynchronous Communication Module	TM990/307		2055
		X.25/HDLC Communication Module	TM990/308		2055
		EPROM Programmer Module	TM990/304		2055
		Floppy Disk Controller	TM990/303B		2055
		High Power Interface	TM990/309		2055
		IEEE 488 Controller	TM990/314		2055
		IEEE page 59 (iSBX) Interface	TM990/959		2055
		Memory Expansion Module	TM990/201		2055
		RAM/EPROM Memory	TM990/201		2055
		RAM/EPROM/ CMOS RAM Memory	TM990/202		2055
		DRAM Memory	TM990/203A		2055
		CMOS RAM Memory	TM990/204		2055
		Low-level Analog Input for Instrumentation Gauges	TM990/315		2055
		Pulse Timer/Event Counter	TM990/317		2055
		RS232/RS422 Expansion	TM990/307		2055
VERSAbus	Motorola	Communications Controller	VM30	Motorola	2043
		Universal Disk Controller	VM21		2043
		Floppy Disk Controller	VM20		2043
		RAM Memory	VM10		2043
		RAM Memory	VM11		2043
		RAM/ROM/I/O	VM80		2043
		Peripheral Controller	VM60		2043
VMEbus	Mostek, Motorola, Philips, Signetics	RAM Memory	MVME200 MVME201	Motorola	2041 2041
		RAM/ROM	MVME210		2041
		GPIB Controller	MVME300 MVME310		2041 2041
		DMA Interface	MVME315		2041
VMEbus	Mostek, Motorola, Philips, Signetics	Winchester/Floppy DiskController	SMVME4300 SMVME3100	Signetics	2053 2053
		Memory System Controller	SMVME1500		2053
		System Debug Moniitor	SMSFT51970		2053

Last Page This Section. Next Page 2001

© IC MASTER 1984

If you need
IC Master Catalog
you need
Integrated Circuits
Magazine.

Not only will Integrated Circuits Magazine update your IC Master Catalog...
...it will provide valuable IC application and selection information in every issue.

SUBSCRIBE TODAY!

Subscription card located inside back cover of Volume I or available from publisher upon request.

Advanced Micro Devices

MICROCOMPUTER BOARDS

Am96/4116A
AmZ8000 16-Bit
MonoBoard Computer

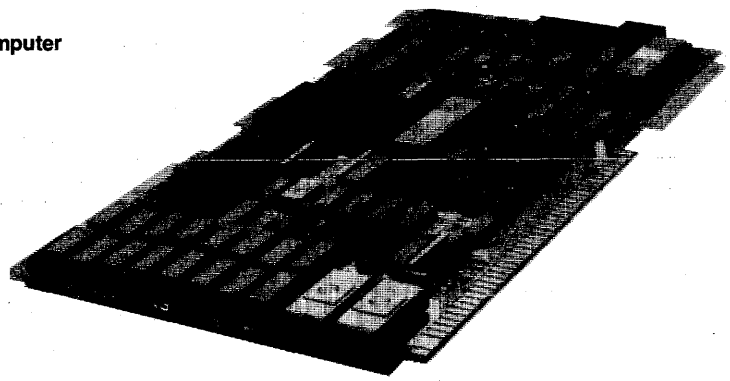

Features

- ☐ One of the Supercomponent™ family of LSI-intensive boards
- ☐ AmZ8002 CPU with 4.0MHz operation: a powerful instruction set; eight addressing modes; a wide variety of data types ranging from bits to long words
- ☐ 32K bytes of dual-ported high-speed memory supporting Advanced Acknowledge (AACK) signal
- ☐ 8K bytes of PROM/ROM space
- ☐ Addresses up to 512K bytes of memory with internal paging arrangement
- ☐ Two RS232 serial I/O ports (Am9551)
- ☐ 24 parallel I/O lines (Am8255A)
- ☐ Five programmable counter/timers (Am9513)
- ☐ Multimode interrupt control (23 sources, 10 lines): vectored interrupts (eight lines); non-maskable interrupts (four OR-ed sources); maskable interrupts (one line, multiple sources)
- ☐ Power-fail capability
- ☐ Compatible with Multibus† standard, SBC-80 card format
- ☐ 100% burned in for enhanced reliability

Am96/4126
Z8000 16-Bit MonoBoard Computer

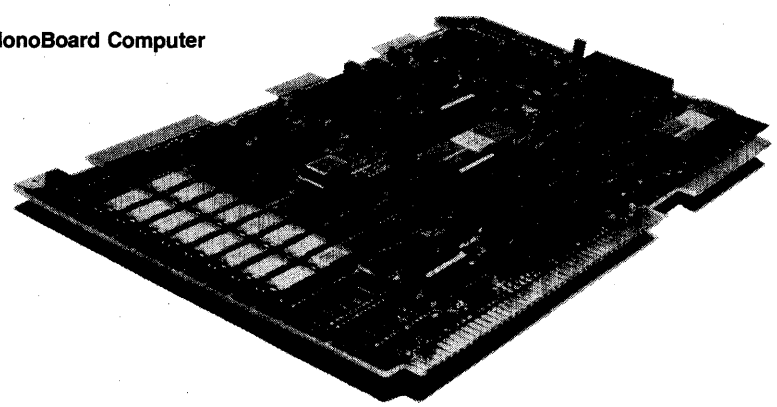

Features

- ☐ One of the Supercomponents™ Family of LSI-intensive boards
- ☐ Z8002 CPU with 4.0MHz operation
- ☐ 128K bytes of dual-ported, high-speed RAM
- ☐ 16K bytes of EPROM space
- ☐ Two RS-232 serial ports
- ☐ Twenty-four parallel I/O lines
- ☐ Five programmable counter/timers
- ☐ On-board memory mapping page register
- ☐ Multimode interrupt controller
- ☐ Full multimaster logic
- ☐ Power-fail interrupt input
- ☐ Compatible with Multibus IEEE 796 standards
- ☐ Extensive burn-in and testing for enhanced reliability

*Multibus is a registered trademark of Intel Corporation.
Supercomponent is a trademark of Advanced Micro Devices, Inc.

Am97/8605
8086 16-Bit MonoBoard Computer

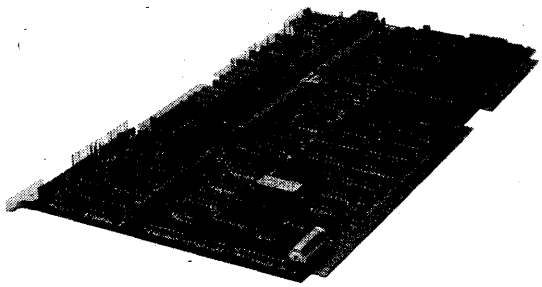

Features

- ☐ 8086 microprocessor with 5, 8, or 10MHz operation
- ☐ Fully software transparent with Intel iSBC* 86/05 and iSBC 86/12
- ☐ Three iSBX bus expansion connectors
- ☐ On-board socket for 8087 Numeric Data Coprocessor
- ☐ Two 16-bit timers/event counters
- ☐ Two serial ports with optional MK3884 SIO
- ☐ 8K bytes of static RAM. Expandable on-board to 16K with memory module
- ☐ Sockets for up to 64K bytes EPROM. Expandable on-board to 128K with memory module
- ☐ 24 programmable parallel I/O lines
- ☐ Nine levels of vectored interrupt control
- ☐ Multibus multimaster interface
- ☐ One year warranty
- ☐ Extensive burn-in and testing for enhanced reliability

*Multibus, iSBX and iSBC are registered trademarks of Intel Corporation.

Am97/0343
Memory Expansion Module for the Am97/8605
Single Board Computer

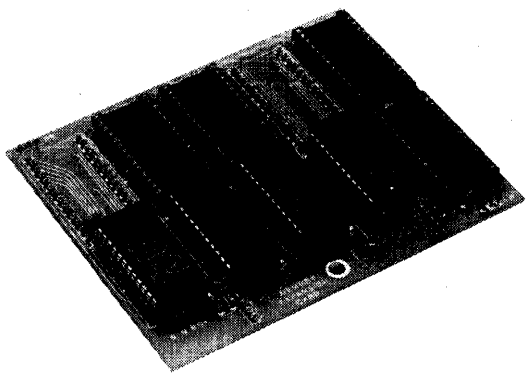

Features

- ☐ Doubles Am97/8605 on-board memory capacity
- ☐ 8K bytes of 150ns static RAM
- ☐ Four additional 28-pin JEDEC sockets accommodate up to 64K bytes of EPROM/ROM
- ☐ Same access times as memory provided on the Am97/8605

© IC MASTER 1984

Advanced Micro Devices

MICROCOMPUTER BOARDS

Am97/0064 • Am97/0128
Am97/0256 • Am97/0512
Random-Access Memory Boards

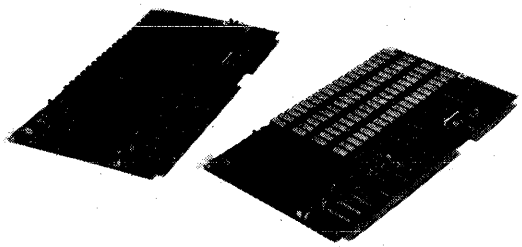

Features

- ☐ Meets proposed IEEE 796 specifications for full Multibus† compatibility
- ☐ Plug compatible with Intel's iSBC* 064A/028A/056A/012B RAM Memory Boards
- ☐ Compatible with Intel's iSBC* and AMD's Supercomponent™ lines of CPU boards or any processor that uses Multibus† interface
- ☐ 8- or 16-bit word size byte-swapping capability
- ☐ Parity with latching error registers and interrupt generation
- ☐ On-board refresh circuitry with optional external refresh control
- ☐ Auxillary connector for back-up power with memory protect control line as provided by Multibus†
- ☐ Supports 16-, 20- and 24-bit addresses
- ☐ Board memory starts on any 4K byte boundary within the 16M byte addressing range
- ☐ Three 16-position switches select 1 of 4096 possible start addresses
- ☐ 200ns max access time for Am97/0064 and Am97/0128; 250ns max access time for Am97/0256 and Am97/0512
- ☐ 350ns and 450ns max R/W cycle times
- ☐ Refreshes every 14 microseconds with a 400ns minimum worst case cycle time
- ☐ Single 5V supply for Am97/0256 and Am97/0512
- ☐ On-board PAL and Am2964B advanced memory controller reduce part count, simplify testing, and enhance reliability
- ☐ 100% burn-in for industrial reliability

Am97/0000B Series
1 Megabyte RAM Boards
768K Bytes, 512K Bytes RAM Boards

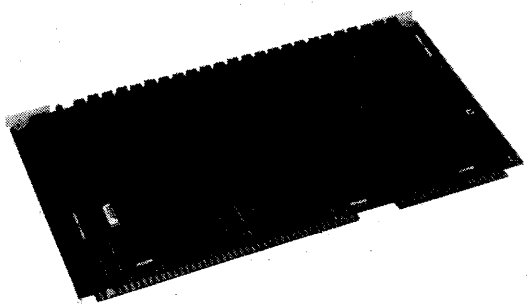

Features

- ☐ Meets IEEE 796 specifications for Multibus compatibility
- ☐ Supports up to 24-bit addressing for a maximum address range of 16 megabytes
- ☐ Board memory starts on any 64K byte boundary, selectable by rotary hex switches. On-board memory can be set to cross any megabyte boundary or optionally stop on a megabyte boundary
- ☐ Optional lock-out feature for flexibility:
  - – Lower 32K and/or upper 64K addresses of first megabyte can be disabled on-board
- ☐ 8 or 16-bit word size with byte swapping capability
- ☐ High speed:
  - – 200ns max access time
  - – 300ns max cycle time
- ☐ Parity with latching error register and interrupt generation
- ☐ On-board refresh circuitry
  - – 350ns max refresh cycle every 14μs
- ☐ Power back-up facilities
- ☐ Extensive use of PALs** provides high density and enhances reliability

**PAL is a registered trademark of Monolithic Memories, Inc.

© IC MASTER 1984

MICROCOMPUTER BOARDS

Am95/6120
Intelligent Floppy Disk Controller

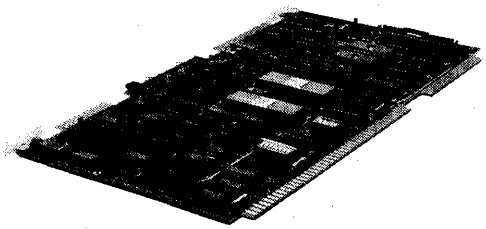

Features

- ☐ ONE OF THE SUPERCOMPONENT™ FAMILY of LSI-intensive boards.
- ☐ CONTROLS up to 4M bytes of floppy disk storage.
- ☐ HANDLES FOUR DRIVES. 8-in. or 5¼-in.
- ☐ INTERMIXED single- and dual-density plus single- and double-sided drives managed by one controller.
- ☐ COMPATIBLE with Shugart, Memorex, CDC, Siemens, Remex, Pertec 8-in. drives and Shugart and MPI 5¼-in. drives.
- ☐ DISTRIBUTED I/O PROCESSOR ARCHITECTURE. Performs all disk I/O without host CPU intervention by means of its own microprocessor, control firmware, RAM buffer and LSI peripheral circuits.
- ☐ CONTROL FIRMWARE provides program code for read, write, execute and initialize, plus commands for error checks, status words and operation verification.
- ☐ HIGH THROUGHPUT. Supports maximum disk read/write data rates. Provides high-speed DMA transfers (up to 1.8M bits/sec) in programmable block, burst, or byte mode.
- ☐ 20-BIT ADDRESSING. Handles transfers up in a 1M byte address space.
- ☐ CONFIDENCE CHECK. Automatically provides a diagnostic check on start-up of RAM, ROM, FDC and DMA. Provides status word response to CPU. Visual LED fault indicator.
- ☐ AUTOMATIC SYSTEM BOOT capability on disk.
- ☐ Multibus† SBC-80 COMPATIBLE.

Am96/5232
Programmable RAM/EPROM and I/O Board

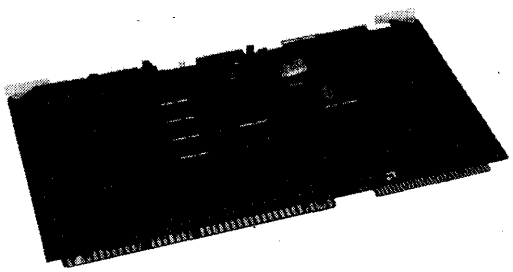

Features

- ☐ Sixteen 28-pin sockets support all 24/28-pin JEDEC standard memory devices up to 16K x 8
  - – Provides for 256K bytes of ROM/EPROM, or
  - – 128K bytes of static RAM, or
  - – 32K bytes of EEPROM (2816A compatible)
  - – Combination of supported devices
- ☐ Support for 8- and 16-bit CPUs
- ☐ Meets IEEE P796 specifications for Multibus compatibility
- ☐ 20- or 24-bit memory addressing for a 16M addressing range
- ☐ Memory mapping via PALs** provides for easy custom configuration
- ☐ 8- or 16-bit I/O addressing
- ☐ RS-232C synchronous/asynchronous serial port
- ☐ Twenty-four lines of parallel I/O
- ☐ Counter/timer with five programmable timers for interrupt and baud rate generation
- ☐ Programmable interrupt controller
- ☐ SBX connector supports 8-bit SBX modules

© IC MASTER 1984

Advanced Micro Devices

MICROCOMPUTER BOARDS

Am94/2000
SBX Motherboard

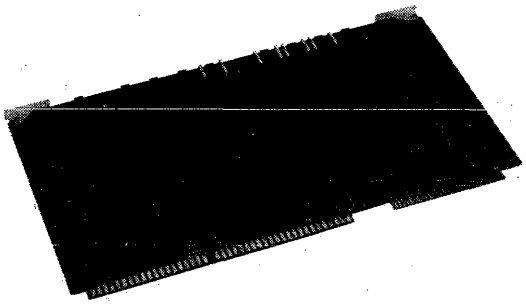

Features

- ☐ Six SBX connectors handle any 8- or 16-bit SBX module available; DMA is not supported
  - – provides for up to six single-width modules, or
  - – one double-width and four single-width modules, or
  - – two double-width and two single-width modules
- ☐ IEEE P796 compatible
- ☐ 8- or 16-bit I/O addressing
- ☐ Multibus-SBX bus timing reconciliation
- ☐ Two 8259A Programmable Interrupt Controllers

Am94/1530
Dual Channel Serial SBX Module

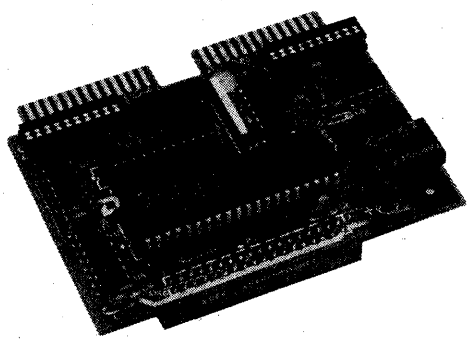

Features

- ☐ Two RS-232C interface ports
- ☐ Incorporates the Z8530 Serial Communications Controller
- ☐ Programmable baud rate generator for each channel
- ☐ Synchronous or asynchronous operation
- ☐ Communications rates of up to 38,400 baud asynchronous and 614,400 bits per second synchronous
- ☐ Extensive interrupt capabilities
- ☐ Crystal oscillator
- ☐ Programmable for NRZ, NRZI, or FM coding
- ☐ SDLC/HDLC and bisynchronous modes

Am94/1541
Stepper Motor Controller SBX Module

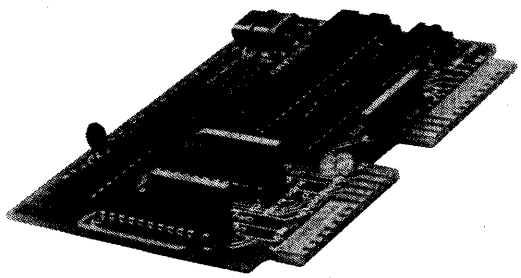

Features

- ☐ Full control for one four-phase stepper motor
- ☐ 8-bit single-width SBX module
- ☐ Incorporates a powerful 8-bit microcontroller
- ☐ Simple user interface
- ☐ 15 lines of feedback from external sensor
- ☐ Line provided for external clock synchronization of multiple Am94/1541s
- ☐ 8 or 16 bits of precision
- ☐ Command or stored-program modes

© IC MASTER 1984

Cromemco offers a wide variety of board-level system components which are designed to expand the capability of Cromemco systems. All boards have been fully integrated with each other and with Cromemco systems to assure reliability. With these S-100 bus (IEEE-696 standard) boards, systems can be easily configured for specific applications in any field.

	Model	Description	Page
CPU BOARDS	**DPU**	68000/Z-80A Dual Processor Unit	2008
	SCC	Z-80A Single Board Computer	2010
	ZPU	Z-80A Central Processor Unit	2009
	FFP*	Fast Floating Point Processor	2011
MEMORY BOARDS			
RAM Boards	**512MSU**	512K-byte Error-Correcting Memory	2015
	MCU	Memory Controller Unit (required for error-correcting memory)	2015
	256KZ	256K-byte RAM Memory	2014
	64KZ-II	64K-byte RAM Memory	2013
	48KTP	48K-byte 2-port Memory (for use with SDI graphics system only)	2035
PROM Board	**32KBS**	32K Bytesaver® Memory and PROM Programmer (for Intel 2716 U.V. erasable PROMs)	2012
I/O BOARDS			
Color Graphics Interface Boards	**SDI**	High Resolution Color Graphics Interface	2034
	SDD*	Color Digitizer	2036
Multi-Processing/ Intelligent I/O Boards	**IOP**	Input/Output Processor	2018
	QDRT	4-Channel Synchronous/Asynchronous Interface (requires IOP)	2019
	OCTRT*	OCTART 8-Channel Asynchronous Serial Interface	2016
	CSP	C-Bus™ Serial/Parallel Interface (requires IOP)	2022
	CNI	Network Interface (requires IOP)	2020
Analog/Digital Boards	**DAC12**	12-Bit D/A Converter (provides two independent channels of D-to-A conversion)	2024
	ADC12	12-Bit A/D Converter (provides 16 channels of A-to-D conversion)	2025
	D+7A	Digital/Analog Interface (provides seven channels of 8-bit A-to-D conversion and seven channels of D-to-A conversion)	2023
Disk I/O Boards	**64FDC**	Double Density Floppy Disk Controller	2027
	SMDI	SMD Hard Disk Interface	2017
	WDI-II	Winchester Hard Disk Interface	2026
Digital I/O Boards	**4PIO**	4-Port Parallel I/O Interface (electrically isolated)	2028
	8PIO	8-Port Parallel Interface	2029
	TRT	Twin UART Digital Interface (includes 2 parallel and 2 serial outputs)	2030
	GPIB	IEEE-488 Interface	2031
	PRI	Printer Interface	2032
Display I/O Board	**CTI**	Single Board Terminal Interface (for use with C-1 display and CKBA keyboard)	2033

*New product

Cromemco

Cromemco, Inc.
280 Bernardo Ave.
P.O. Box 7400
Mountain View, CA 94039
(415) 964-7400
TWX 910-379 6988

© IC MASTER 1984

CROMEMCO AND S-100 STRUCTURES

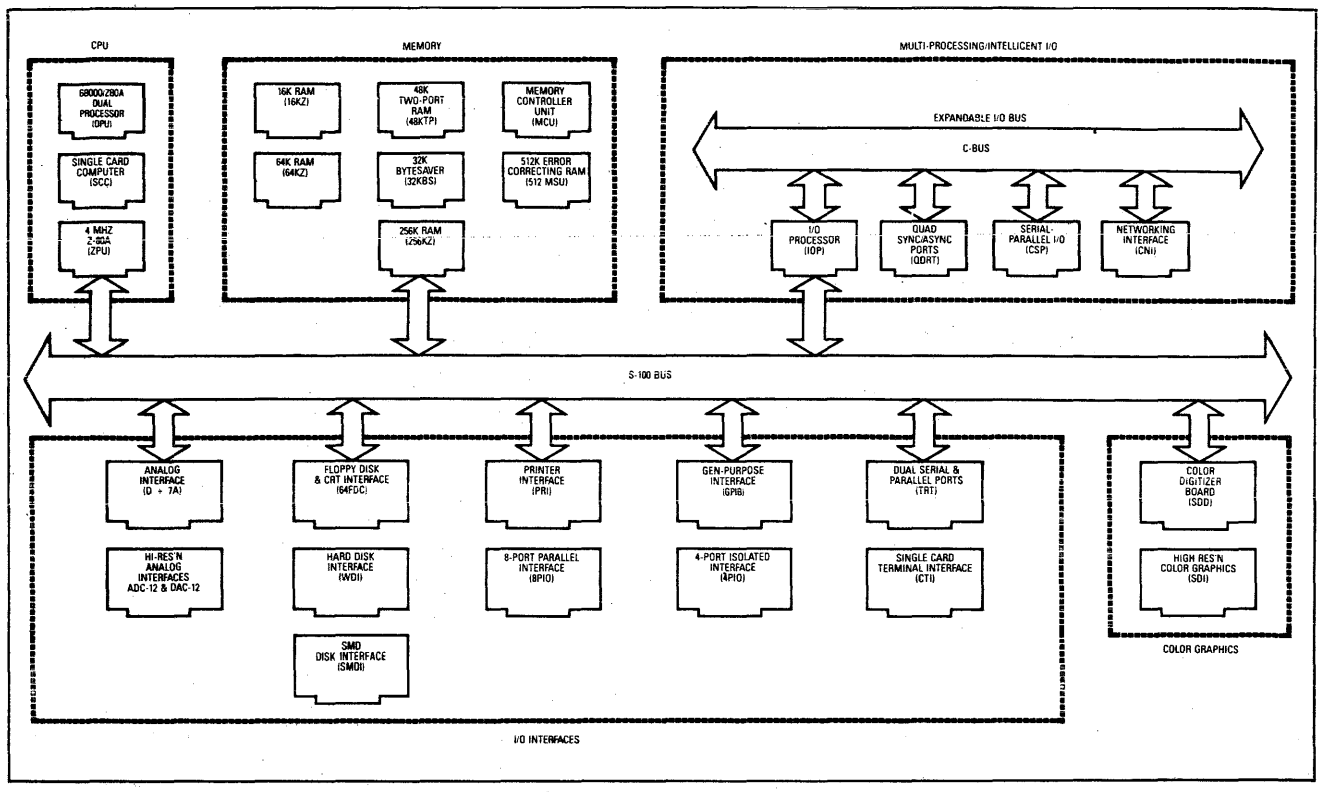

Cromemco is the world's largest manufacturer of microcomputers based on the S-100 bus. The S-100 bus is the best building-block system for OEM computer applications and the most flexible system for designing modular computer systems.

The S-100 bus structure was invented the same year Cromemco was founded, 1975. The bus allows all system components to interrelate to each other.

With S-100 boards you can achieve your system goals with the greatest efficiency, speed and economy of design. The large number of connector pins (100), the high speed (10 MHz) bus clock, the large (16M byte) addressable memory and other technical features make the S-100 bus ideal for industrial, business, and scientific computer applications.

The Cromemco philosophy of S-100 boards and support system components is to apply state-of-the-art technology and excellent engineering to every part of the design. As a result, our boards are efficient, high quality products that are easy to use.

In order to retain high speed operation while avoiding noise problems, we use a special ground-plane design in all our boards. For every S-100 bus signal line we have added a ground line. This cuts RF crosstalk, noise, and the errors these can cause.

Since Cromemco's system level products use the S-100 bus, the board products have a proven record of performance. We have very high quality standards for every board product we produce. It is standard procedure to extensively test and burn-in every board we sell. This is one reason why Cromemco has rated first in reliability on independent surveys.

Cromemco also has extensive lines of software and development tools and established, dependable field engineering and service organizations. Besides our factory staff, we offer the full support of the TRW third party service organization.

Cromemco

Cromemco, Inc.
280 Bernardo Ave.
P.O. Box 7400
Mountain View, CA 94039
(415) 964-7400
TWX 910-379 6988

MODEL DPU
Dual Processor Unit with Companion Memory

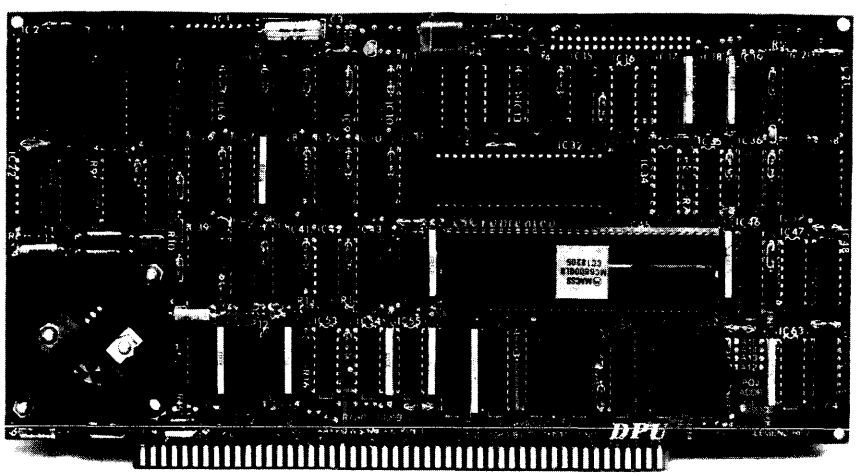

A FAST, EASY WAY TO START WITH THE 68000

The new Dual Processor Unit gives you an easy way to get started with the impressive 68000 microprocessor, which is widely acknowledged as the most powerful of the new processors. It has 32-bit wide internal architecture, 24 address lines allowing it to address 16 megabytes, 56 main instruction types, five main data types, and 14 addressing modes.

8-BIT AND 68000 SOFTWARE

As the name implies, the DPU has both a Z-80A and the 68000 on board. This gives access to a wide variety of existing CP/M and other 8-bit software as well as a family of new software such as a 68000 Assembler, FORTRAN 77, Pascal, BASIC, COBOL and C. Switching between the 68000 and the Z-80A on the DPU is software-controlled.

Cromemco also offers the CROMIX operating system, which is similar to UNIX but has even more features and gives multi-tasking and multi-user capability.

Present customers can field-upgrade their Cromemco systems to use the DPU and still be able to run their present software with the Z-80A on the DPU.

RAM Memory units for use with the DPU are also available (see the specifications on page 9).

TECHNICAL SPECIFICATIONS

Processors:
68000 and Z-80A

Clock Rate:
68000: 8MHz
Z-80A: 4MHz

Instruction Set:
68000: over 1000 instructions in 56 main types
Z-80A: 158 instructions including the 78 instructions of the 8080A processor

Power-on Jump:
Cromemco processor standard system, as well as user selectable jumps to any 4K memory boundary

Processor Control:
Software controlled switching between 68000 and Z-80A

Bus:
S-100 (Jumper selectable to IEEE-696)

Power Requirements:
+8 volts @ 2.0 amps
± 18 volts not used

Operating Environment:
0–55 degrees Centigrade

© IC MASTER 1984

MODEL ZPU
Central Processing Unit

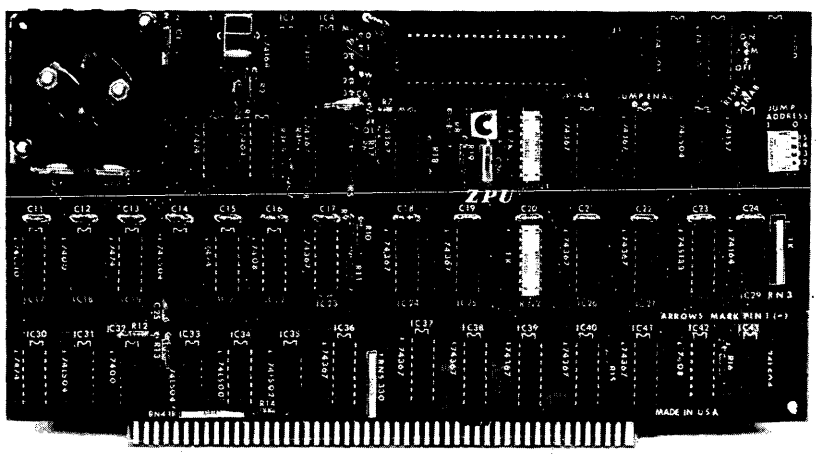

Cromemco's ZPU is an S-100 bus compatible CPU (Central Processing Unit) which uses the powerful Z-80A microprocessor. The ZPU has an advanced set of features designed to increase total system computing power. Most importantly, the ZPU operates reliably at a 4 MHz clock rate. The ZPU also offers power-on-jump capability, an onboard wait state generator, optional independent selection of M1 wait states, address mirroring circuitry, and priority interrupt capability.

4 MHz CLOCK RATE

The ZPU lets you choose either a 4 MHz or 2 MHz crystal-controlled clock rate. The clock rate is factory wired for 4 MHz and can be optionally jumpered for 2 MHz operation.

POWER-ON MEMORY JUMPS

With power turn-on, the ZPU will jump to any desired 4K boundary in memory. No switch flipping is needed to begin a program.

POWERFUL INSTRUCTION SET

The instruction set of the Z-80A contains 158 instructions, including the 78 instructions of the 8080A.

TECHNICAL SPECIFICATIONS

Processor:
4 MHz version of the Z-80A

Clock Rate:
4 or 2 MHz (jumper selectable)

Instruction Set:
158 instructions including the 78 instructions of the 8080A processor

Power-On-Jump:
Jumper selectable (factory shipped at C000)

Power-On-Jump Locations:
16 locations, jumper selectable

Bus:
S-100

Power:
+8 volts @ 1.1A
± 18 volts not used

Operating Environment:
0–55 degrees Centigrade

MODEL SCC
4 MHz Single Card Computer

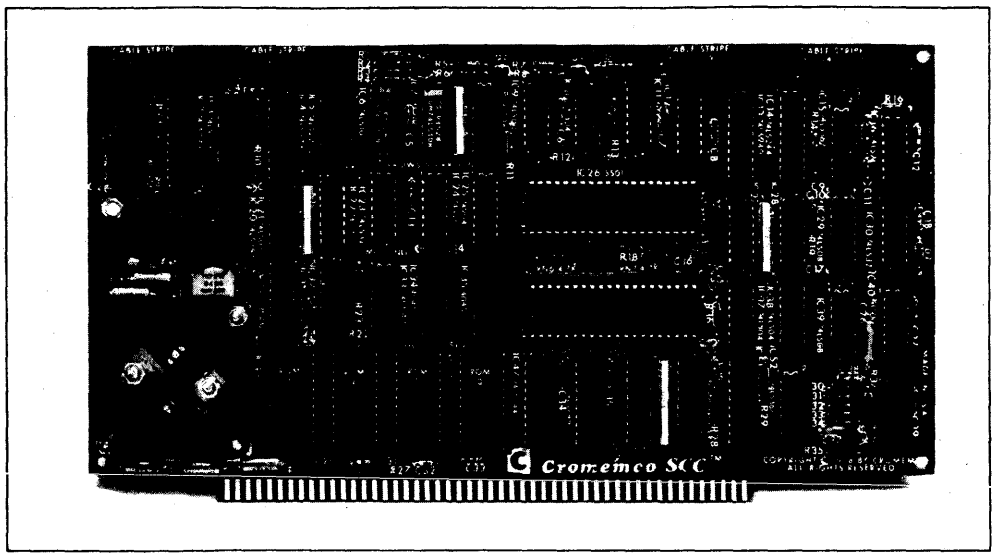

A COMPLETE 4 MHz COMPUTER

The Single Card Computer (SCC) brings the power of the Z-80A and the flexibility of the S-100 bus to the dedicated computer environment.

This card was designed to get your application up and running fast. It offers 4 MHz operation, up to 8K bytes of on-board 2716 PROM, and 1K byte of static RAM memory. Interfacing is easy through the RS-232 (or 20 mA current loop) serial interface with programmable baud rates to 76,800 baud. This stand-alone card also gives you 24 bits of bidirectional parallel I/O, 5 programmable timers, vectored interrupts, and complete compatibility with all Cromemco cards.

The SCC is a complete computer. Only a power supply and your PROM software are required for operation. Yet it can be the core of an expandable S-100 bus system since additional memory, I/O, or even floppy disk drives can be added as the application requires.

MONITOR/3K BASIC

Cromemco's Z-80A Monitor and our 3K Control BASIC are available in 2716 ROM for use in the Single Card Computer. With this two-ROM set (Model MCB216) the SCC can be used immediately—no other memory or I/O is required. The monitor has 12 commands to aid in program development. The Control BASIC has 36 commands/functions and can directly access I/O ports and memory locations as well as call machine language subroutines.

TECHNICAL SPECIFICATIONS

Processor:
Z-80A

Instruction Set:
158 instructions

ROM Capacity:
8K Bytes located from address 0000 to 1FFF
2716 Programmable with 32K Bytesaver (Model 32KBS)

RAM Capacity:
1K Bytes located from address 2000 to 23FF

RAM Type:
4045, Static

Serial I/O Ports:
I/O levels: RS-232 or 20 mA current loop
Baud rate: 110 to 76,800 (software selectable)

Parallel Ports:
Input Port: 24 bits
Output Port: 24 bits
Input Load: One TTL equivalent
Output Drive: 20 TTL loads

Interval Timers:
Number of timers: 5
Timer range: 0–16.32 milliseconds (software selectable)
Timer resolution: 64 microseconds

Vectored Interrupts:
Number of restart locations (Z-80A mode): 65,536

UART type:
5501

Bus:
S-100

Power Requirements:
+8 volts at 1.4A
+18 volts at 70 mA
−18 volts at 25 mA

Operating Environment:
0–55 degrees Centigrade

© IC MASTER 1984

MODEL FFP
Fast Floating Point Co-Processor

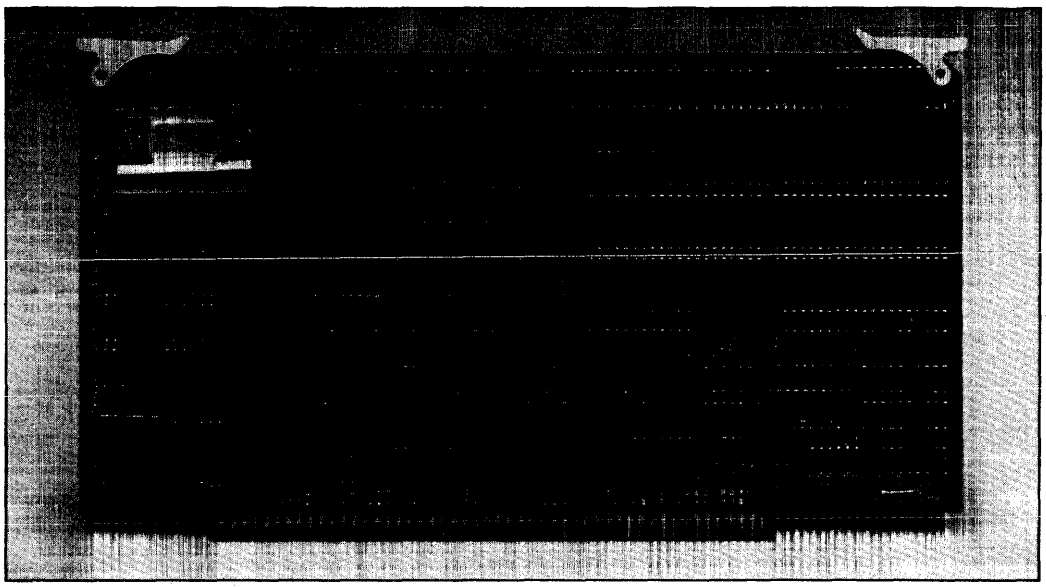

FEATURES

- 3.0-Microsecond Floating-Point Add
- 32-Bit and 64-Bit IEEE Floating-Point Format
- 16-Bit and 32-Bit Integer Operations
- User Transparent Execution
- Transcendental Functions
- Single Plug-in Module

The Fast Floating Point Co-Processor Board is a high-speed processor which performs 32-bit and 64-bit precision floating-point operations for 68000-based systems. The FFP performs basic arithmetic operations such as add, subtract, multiply and divide, as well as advanced operations such as logarithm, exponentiation, sin, cos, tan and arctan. The FFP instruction set also includes type conversion, modulus, minimum, maximum and compare operations. The processor contains 4K words of RAM program memory and 16K words of data memory. The FFP, when used with Cromemco's Fast Fortran, Fast Pascal or Fast C, is user transparent. Its operation requires no modifications to existing FORTRAN, Pascal, or C programs. These programs typically execute two to five times faster when the FFP is added to the system.

ARITHMETIC EXECUTION TIMES (in microseconds)

Operation	32-Bit Single Precision	64-Bit Single Precision
Add, Subtract or Multiply	3.0	12.0
Pivot (multiply-add)	6.0	24.0
Divide	18.0	36.0
Square Root, Sine or Cosine	48.0	

TECHNICAL SPECIFICATIONS

Architecture:
2901-bit sliced ALU; 16 × 16 high-speed multiplier; separate program and data memories; writeable control store PROM and RAM program memory

Data Formats:
IEEE Floating Point
Single Precision (SP): Exponent — 8 bits
Mantissa — 24 bits
Double Precision (DP): Exponent — 11 bits
Mantissa — 53 bits
Integer: Single word — 16 bits
Double word — 32 bits
Data Type: Single Precision, floating point, Real
Double Precision, floating point, Real
Single Precision, floating point, Complex
Single Word Integer, (Real)
Double Word Integer, (Real)
Floating Point Instruction Set:
SP/DP: +, −, *, /, pivot, load reg., store reg.
SP Real: Product, Sum, Prod-sum (all include DP conversion); sin, cos, atan, e^x, $\log_e(x)$, x^y, square root, minimum, maximum, clip, inverted clip, modulus
SP Complex: Mag. squared, multiply
Integer: SP/DP integer convert to SP floating point, SP floating point convert to SP/DP integer

Program Memory: 4K × 32 bits RAM; 2K × 32 bits PROM

Data Memory:
Dual-ported 16 × 16-bit RAM (supports scalar math)

I/O: Occupies 16 locations in extended I/O space

Instruction Cycle: 125 nsec

Power Requirements: +8 volts at 4.0 amps typical

Bus: S-100 (IEEE-696)

Operating Environment: 0 to 55 degrees Centigrade

© IC MASTER 1984

MODEL 32KBS
32K BYTESAVER Memory Board with 2716 PROM Programmer

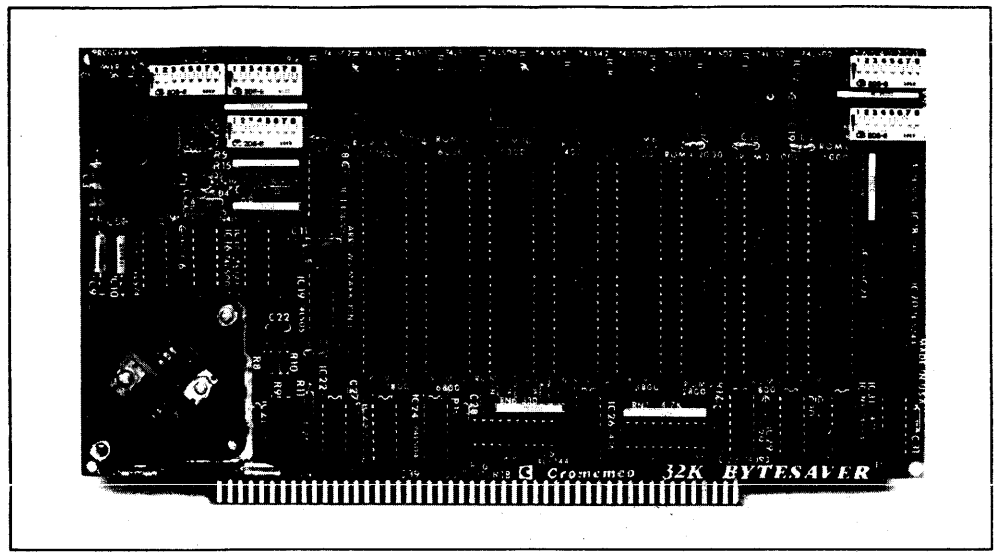

32K BYTESAVER PROGRAMS THE HIGH DENSITY 2716 PROM

The 32K BYTESAVER is an S-100 memory board and PROM programmer which uses the 2716 2-Kilobyte PROM.

Cromemco's 32KBS card has a full 32-kilobyte capacity of non-volatile storage for those ROM-intensive applications.

The user also gets the convenience of an on-board 2716 programmer.

The new 32K BYTESAVER holds up to sixteen 2716 PROMs. Switches are provided to:

Protect and unprotect PROMs individually or in groups for programming

Shadow ROM socket pairs (allows external RAM to overlap portions of ROM address space)

Select card address

Control the powerful Bank Select and DMA IN-OUT features.

NO SPECIAL SOFTWARE NEEDED

A simple, one-time write of the desired data into an erased PROM with the on-board programmer turned on is all that is required to store information quickly and permanently.

TECHNICAL SPECIFICATIONS

Memory Capacity:
32K bytes

Memory Type:
Intel 2716 PROM (single voltage version) or equivalent

Memory Access Time:
450 nanoseconds

Wait States at 2 MHz:
None required

Wait States at 4 MHz:
One per machine cycle

Bus:
S-100

Power Requirements:
+8 volts @ 2.1A, max.
± 18 volts not used

Operating Environment:
0–55 degrees Centigrade

© IC MASTER 1984

MODEL 64KZ-II
64K RAM Card with Extended Bank Select

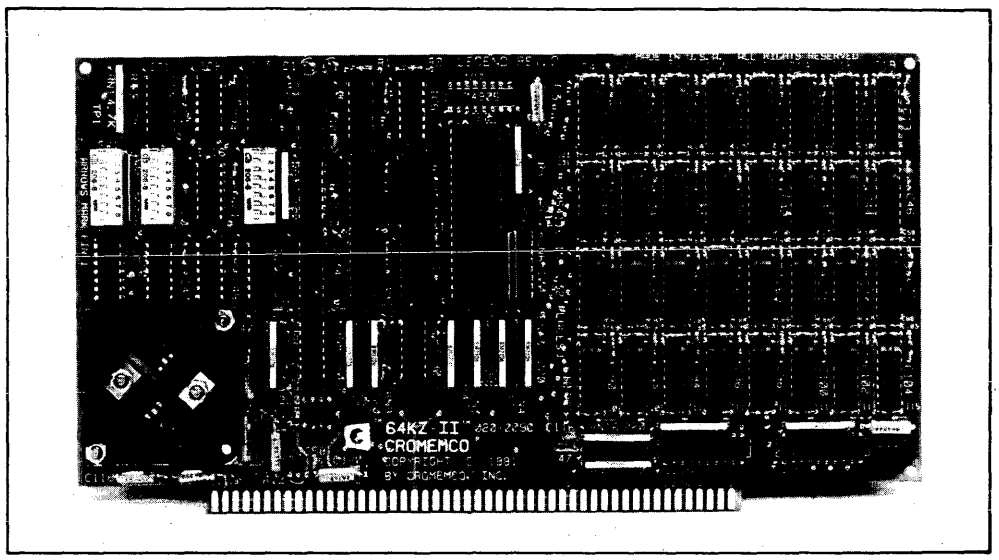

This 64K byte RAM card is fast and very expandable.

The Model 64KZ-II is organized as two 32K blocks of memory. Each block can be placed either in high-memory space (address 8000-FFFF) or low-memory space (address 0000-7FFF).

Each block can further be placed in any of 8 different memory banks. Address and bank assignment of each 32K block is switch selectable.

Another feature is that each 32K block can be independently switched to be selected or deselected after reset.

EXPANDABLE TO 512K

With our Bank Select feature you can expand memory space from 64K to 512K in eight banks. (See page 10 for a discussion of BANK SELECT.)

The 64KZ-II is fully tested to be compatible with all Cromemco Z-80 based products.

TECHNICAL SPECIFICATIONS

Memory Capacity:
64K bytes

Memory Type:
4116 RAM

Memory Access Time:
150 nanoseconds

Wait States at 2 MHz:
None required

Memory Address Capabilities:
CROMIX type bank switching.

Data Path:
8 bit read/write

Wait States at 4 MHz:
None required

Bus:
S-100

Power Requirements:
+8 volts @ 0.6A
+18 volts @ 0.2A

Operating Environment:
0–55 degrees Centigrade

© IC MASTER 1984

MODEL 256KZ
256K RAM Card

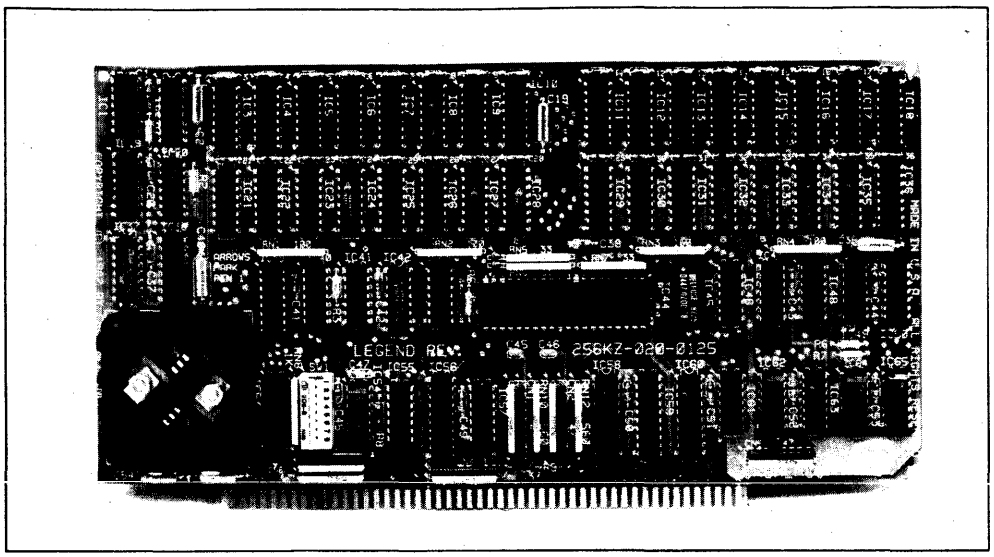

Cromemco's 256KZ RAM card is an S-100 bus compatible 256K byte read/write memory board. This board is ideal for use with Cromemco's CROMIX multi-user, multi-tasking operating system.

In horizontal bank select mode, the 256KZ appears to be four 64KZ banks of memory. The 256KZ also implements the extended addressing capability required to utilize the full addressing power of the Cromemco DPU processor board. The 256KZ also incorporates 8-bit and 16-bit read/write operations in accordance with the IEEE-696 standard in order to further enhance the throughput of 16-bit systems. Extensive use of LSI and VLSI components reduces power consumption and increases reliability.

TECHNICAL SPECIFICATIONS

Memory Capacity:
256K Bytes

Memory Type:
4164-15 T2

Wait States:
None required (except during CROMIX initialization)

Memory Address Capabilities:
CROMIX-type bank switching and 24-bit extended addressing

Data Path:
S-100 compatible (IEEE-696) 8/16-bit data read/writes

Bus:
S-100

Power Requirements:
8V @ 900 mA

Operating Environment:
0–55 degrees Centigrade

© IC MASTER 1984

MODEL MCU and MODEL 512MSU
Memory Controller Unit and Memory Storage Unit

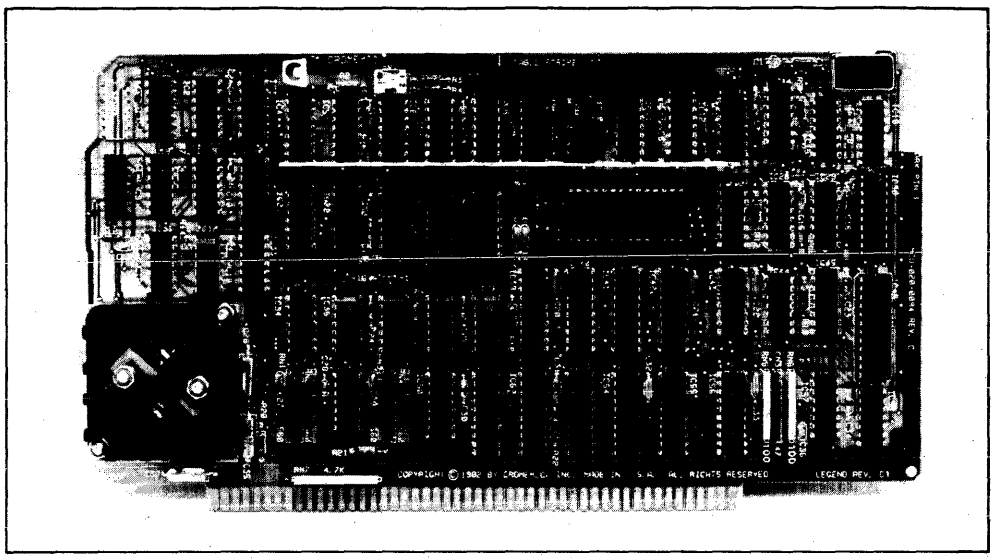

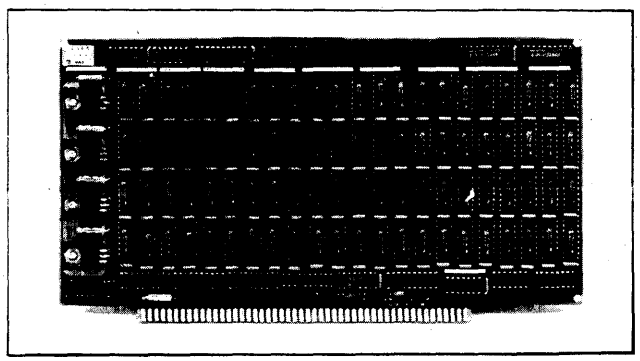

For use with the DPU, Cromemco offers a 512 kilobyte RAM memory unit. This unit works under the control of a new Memory Controller Unit (MCU) which supports either byte or word-width operation.

A special feature of the memory unit is its built-in error checking and correction capability. In concert with this capability the Memory Controller Unit has an error-logging feature which stores the location of errors encountered and identifies the particular MSU that had the error. This feature is very helpful in system diagnostic and maintenance work.

For error checking and correcting, the memory unit is designed to use 22 bits to encode each 16-bit word. A modified Hamming code is also used which allows transparent detection and correction of single-bit errors and detection of double-bit errors.

TECHNICAL SPECIFICATIONS
Model MCU

Functions:
- Error detection
- Error correction
- Memory Refresh Control
- Memory Cycle Timing

Data Path:
8/16 bit read/write

Bus:
S-100, (IEEE-696) compatible

Power Requirements:
+8 volts @ 1.5A
±18 volts not used

Operating Environment:
0–55 degrees Centigrade

Model 512MSU

Memory Capacity:
256K by 22 bits; 512K bytes

Memory Type:
64K dRAMs; 150 nanosecond access time

Memory Address Capabilities:
24 bit extended addressing

Bus:
S-100, (IEEE-696) compatible

Power Requirements:
+8 volts @ 1.5A

Operating Environment:
0–55 degrees Centigrade

© IC MASTER 1984

MODEL OCTRT
OCTART 8-Channel Asynchronous Serial Interface

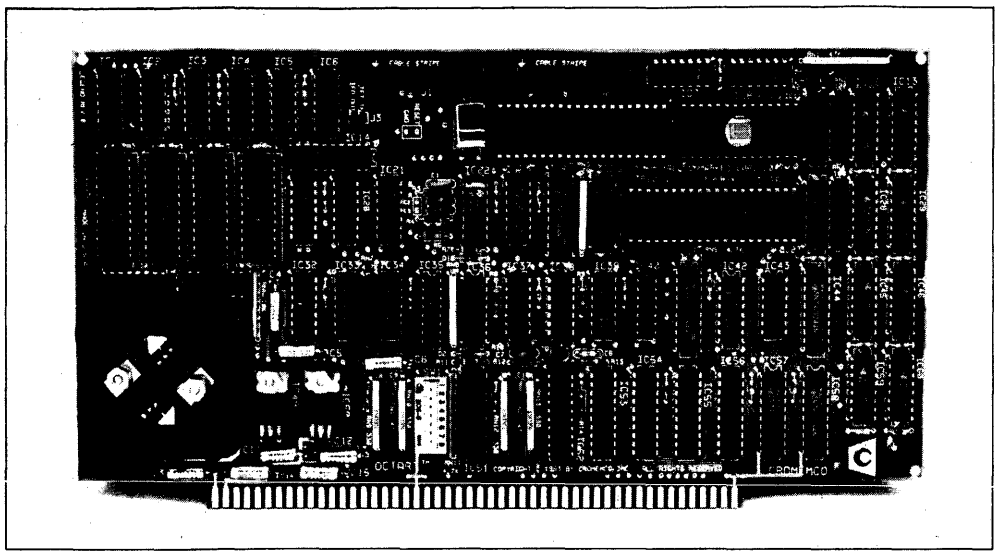

FEATURES

- Intelligent single board communications controller using Z80A with 16KB of ROM and 64KB of RAM
- Eight independent serial channels with handshake
- Asynchronous, high speed communications to 38.4K baud, with provision for user defined baud rate to 125K baud
- Transmit and receive baud rates can be set independently
- Four multifunction programmable 16-bit counter-timers
- Download of driver and/or application software to run on the board.

The OCTART is an intelligent communications controller serving as a slave processor on the S100 (IEEE 696) bus. It is an economical way to add high speed asynchronous communications to a Cromemco system. The OCTART can replace three or four separate boards in many applications.

Eight independent serial channels on the OCTART provide flexibility in selecting the mode of asynchronous communications you want: data length can be selected from 5 to 8 bits; parity mode may be chosen in odd parity, even parity, no parity bit, or the parity bit may be forced high or low; stop bit length may be varied from 1 or 2 bits in increments of 1/16 bit; and the baud rate may be chosen from 18 values between 50 to 38.4K baud. In addition to serial communication, four 16-bit counter-timers are available.

The OCTART supports full duplex, auto echo, local loopback and remote loopback on each channel. Each OCTART channel also has transmit data, receive data, request to send and clear to send signals conforming to EIA standard RS-232.

The OCTART can be more than a serial controller because it has onboard a Z80A microprocessor, 16KB of ROM, and 64KB of RAM. The control program in the ROM allows you to download into RAM your own device drivers or application programs and to map out the ROM, leaving the full address space of the Z80A. This allows you to run the most demanding communications application without burdening the host system.

TECHNICAL SPECIFICATIONS

Processor: Z80A

Clock Rate: 3.6864MHz

Memory:

16KB EPROM/ROM, may be bank selected in or out under program control

64KB RAM, upper and lower 16KB sections alternate with ROM memory through program controlled bank select

Interrupts:

On-card interrupts for character handling, break detection, counter/timer ready, and host data transfer

S-100 interrupts for OCTART data transfer

Programmable 8-bit interrupt vector

Supports daisy-chain priority system

Reset Modes:

Reset via main bus reset line or by software command from host

Serial Channels:

Eight independent serial channels implemented with four 2681 chips

Parity modes: odd, even, none or force. False start bit detection and line break detection and generation

Serial Protocols: Asynchronous

Serial Rates: 50 to 38,400 baud asynchronous

Modem Support: RTS and CTS

Counter Timing: Four 16-bit counter-timers

© IC MASTER 1984

MODEL SMDI
SMD Hard Disk Interface

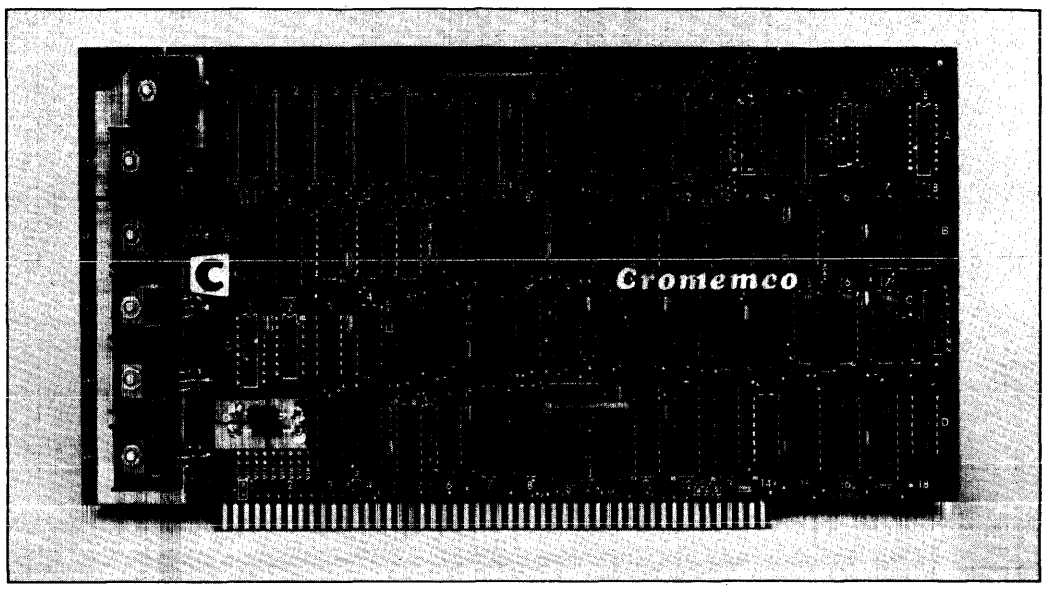

FEATURES

- Full Sector Buffering
- Sector Interleaving
- Differential Flat Cable Interface
- Automatic CRC Generation and Checking
- Two-Drive Capacity
- Single Board Interface

The SMDI interfaces disk drives with a flat cable storage module disk (SMD) interface to microcomputer systems using the S-100 Bus. Each controller is capable of handling two drives, providing a maximum storage capacity of 1.2 billion bytes of storage per controller. Cromemco software supports drives with fixed/removable recording platters, and also allows a drive to be partitioned into several logical units.

The SMDI eliminates disk/CPU timing restraints with full sector buffering. Data integrity is assured with automatic CRC generation and checking. Cromemco software further reduces the error rate by using the early/late data strobe mode and the servo offset ± mode provided by some drives.

TECHNICAL SPECIFICATIONS

Drive Interface:
Storage module drive interface, standard (SMD)

Data Transfer Rate:
6 to 10 megabits/second

Drives Supported:
Two per board

Storage Capacity:
Drive dependent, up to 600 megabytes per drive

Interface Cables Required:
"A" cable 60-wire flat twisted-pair, one per multi-spindle installation in daisy chain
"B" cable 26-wire shielded flat cable with ground plane, one per drive

Maximum Cable Length:
"A" cable: 100 ft cumulative
"B" cable: 50 ft

Bus:
S-100

Power Requirements:
@ −16V typical, 325-milliamp; maximum, 400-milliamp
@ +8V typical, 1.5-amp; maximum, 2-amp

Operating Environment:
0 to 55 degrees Centigrade

© IC MASTER 1984

MODEL IOP
I/O Processor

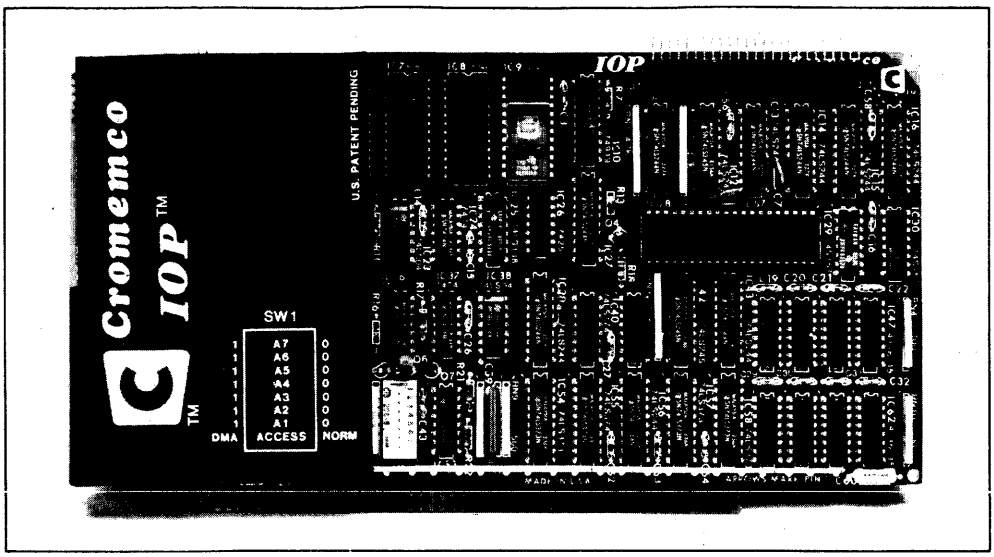

MULTI-PROCESSOR CAPABILITY

With this new I/O Processor the user can have multi-processor capability in a S-100 bus system.

The new Model IOP is a true single-card process controller—one that has a fast Z-80A processor, 16K bytes of RAM, and up to 16K bytes of PROM capacity.

The IOP interfaces to the S-100 host processor by means of simple "input" and "output" instructions.

SATELLITE PROCESSOR

The IOP can be used either alone or with other IOP cards as a satellite processor on the S-100 bus.

Or the IOP can process I/O channels and interface to other devices such as the Cromemco QUADART through the C-bus connector on the top edge of the card.

The IOP is an advanced development that brings a new dimension of computer architecture to Cromemco computer systems.

TECHNICAL SPECIFICATIONS

Processor:
4 MHz Z-80A

Instruction Set:
158 instructions (including the 78 instructions of the 8080A processor)

ROM Capacity:
16K bytes positioned starting on any 2K boundary (selectable by bipolar PROM)

ROM Type:
Intel 2716, 2732 or equivalent

RAM Capacity:
16K bytes positioned starting on any 2K boundary (selectable by bipolar PROM)

Standard Address Configuration:
PROM — 000 to 1FFFH
RAM — 4000H to 7FFFH

RAM Type:
4116

Host Interface:
S-100 bus input-output ports

Peripheral Interface:
C-bus

M1 Wait State Generation:
0-1 wait states jumper wire selectable

Power Requirements:
+8 volts @ 1.5A
+18 volts @ 100 mA
−18 volts @ 30 mA

Operating Environment:
0–55 degrees Centigrade

© IC MASTER 1984

MODEL QDRT
QUADART Serial Communications Interface

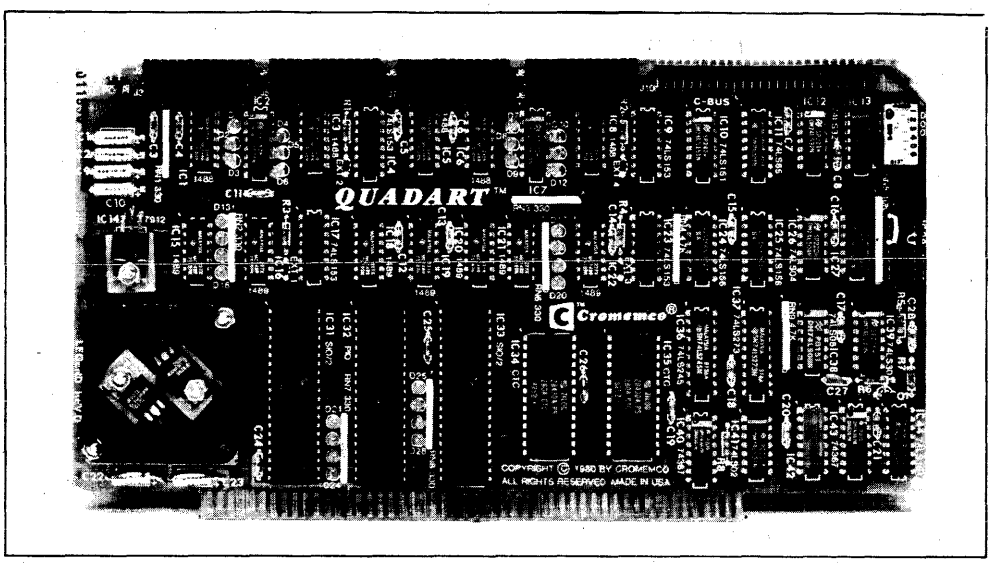

SIMULTANEOUSLY INTERFACES UP TO FOUR SERIAL CHANNELS

This versatile new QUADART serial communications interface card offers the power to satisfy virtually any high-speed data communications application.

The QUADART card is designed to operate with the I/O Processor (Model IOP). It includes four independent serial channels, each supporting Asynchronous, Synchronous byte mode (Bisync), and Synchronous bit mode (SDLC) protocols with complete handshaking for modems. Serial protocol is software-selectable for each channel.

The unique loopback feature gives the capability to connect data from any channel to any other channel, to connect data from any modem to any other modem, or to use any modem/channel combination for diagnostics and selftest.

Baud rates for each may be software-selected from 0 to 300K baud (asynchronous to 19,200 baud).

VECTORED INTERRUPTS

The QUADART also supports the powerful internally-prioritized vectored interrupt structure of the Z-80A microprocessor which has become a trademark of Cromemco interface cards.

INTERVAL TIMES

The QUADART has real-time clocking capability with four interval timers each having periods as small as 4.00 microseconds. Up to three timers can be cascaded to provide a 1.000-second time interval.

The software-selectable time range of each timer is 0 to 16.384 milliseconds.

C-BUS

The control for the QUADART is from the C-bus provided by Cromemco's powerful I/O processor computer, Model IOP. The IOP interfaces between the S-100 bus and the C-bus and can support up to four QUADARTs with full interrupt capability.

TECHNICAL SPECIFICATIONS

Serial Channels:
- Serial protocols:
  - Asynchronous Byte
  - Synchronous Byte (Bisync)
  - Synchronous Bit (SDLC)
  - Modem handshaking
- Number of channels: 4
- Diagnostics: Channel-to-channel diagnostic loop-back capability (input/output channels software selectable)

Asynchronous Baud Range:
- 0 to 19,200 baud (software selectable)

Synchronous Baud Range:
- 0 to 300K baud (software selectable)

Interval Timers:
- Number of timers: 4
- Timer range: 0 to 16.384 msec (cascadable to 1.0 second, software selectable)
- Timer resolution: 4.0 microseconds

Vectored Interrupts:
- Number of restart locations (Z-80A mode): 65,536
- Prioritization of serial channels and timers: Internally prioritized
- Prioritization for multiple QUADARTs: daisy-chaining

Serial Channel Type: Z80-SIO/2

Parallel Channel Type: Z80-PIO

Timer Type: Z80-CTC

Interface: C-bus

Power Requirements: +8 volts @ 1.5A
+18 volts @ 100 mA
−18 volts @ 100 mA

Operating Environment:
- 0–55 degrees Centigrade

© IC MASTER 1984

MODEL CNI
C-NET

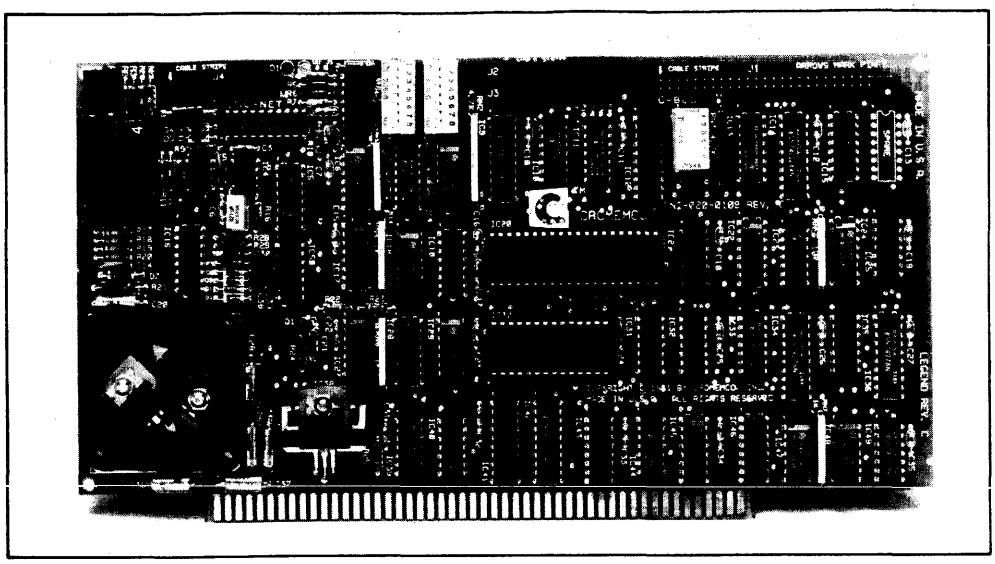

The Cromemco Network (C-NET) is a network which combines the power of CARRIER-SENSED MULTIPLE ACCESS/COLLISION DETECTION software protocol with the ruggedness of a transformer coupled, shielded twisted pair transmission medium. Cromemco's CNI C-NET Interface board interfaces the network medium (the physical data channel which interconnects network stations) to a 4 MHz Z-80A, single board computer with program storage (Cromemco's Input/Output Processor board). The CNI's isolation transformer and crystal controlled clock are optimized for operation with C-NET. The CNI provides a standard 500 kHz C-NET data rate but may be used with user-supplied media at network data rates from 0 to 880 kHz.

The CNI also features a differential transmitter and receiver which rejects common mode noise. In addition, phase locked loop clock recovery minimizes noise sensitivity. Isolation transformer coupling isolates the network cable from node faults and protects the node electronics from network cable faults.

Bit protocol on the CNI is managed by an LSI circuit. The board provides automatic address recognition, error checking, and vectored interrupts on network characters, network conditions, or programmable timers. Two uncommitted general purpose timer/counter circuits with extended timing intervals are also provided. The CNI includes an RS-232 serial port for use with a local terminal.

OPERATING MODES

The CNI board operates in conjunction with an IOP board to provide local network communications for the Cromemco CROMIX operating system.

TECHNICAL SPECIFICATIONS

Controller:
Cromemco Input/Output Processor (IOP) Board

IOP Use:
The IOP functions as a distributed S-100 Z-80A processor with program store to control the CNI in either stand-alone mode or as a task pre-processor for the host S-100 system.

Bus:
S-100 (IEEE-696) and C-bus

C-bus Use:
The CNI and IOP are linked with a 50 conductor overhead C-bus cable. The CNI exchanges data, commands and status with the IOP through 10 C-bus I/O ports.

Network Software Protocol:
Carrier-Sensed, Multiple Access with Collision Detection (CSMA/CD).

Network Transmission Standard:
The network channel is transformer coupled to twin-axial balanced lines (C-NET bus cable).

Network Modulation:
Synchronous digital, phase encoded

Network Data Rate:
C-NET: 500 Kbps ± .001%
Altmode: 0-880 Kbps, clock externally supplied

© IC MASTER 1984

RS-232 Interface:
Z-80 SIO serial channel B manages the IOP to RS-232 interface. The RS-232 channel is operated in Asynchronous Mode with a software defined data rate from 75 to 19,200 baud. SIO B controls modem circuits DTR, DCD, CTS, and RTS. Both DTE (CRT) and DCE (Modem) style connections are provided.

Counters/Timers:
A Z-80 CTC supplies four programmable counter/timer channels.

Interrupts:
Both the Z-80 SIO and the Z-80 CTC may be programmed to generate prioritized, maskable and vectored Z-80 IM2 interrupt requests to the IOP.

LSI Device Types:
One Z-80 SIO (Serial Input/Output)
One Z-80 CTC (Counter Timer Circuit)

Power Requirements:
+8 VDC @ 1.2A (max)
−18 VDC @ 150 mA (max)
+18 VDC @ 500 mA (max)

Operating Environment:
0–55 degrees Centigrade

MODEL CSP
Serial/Parallel Interface

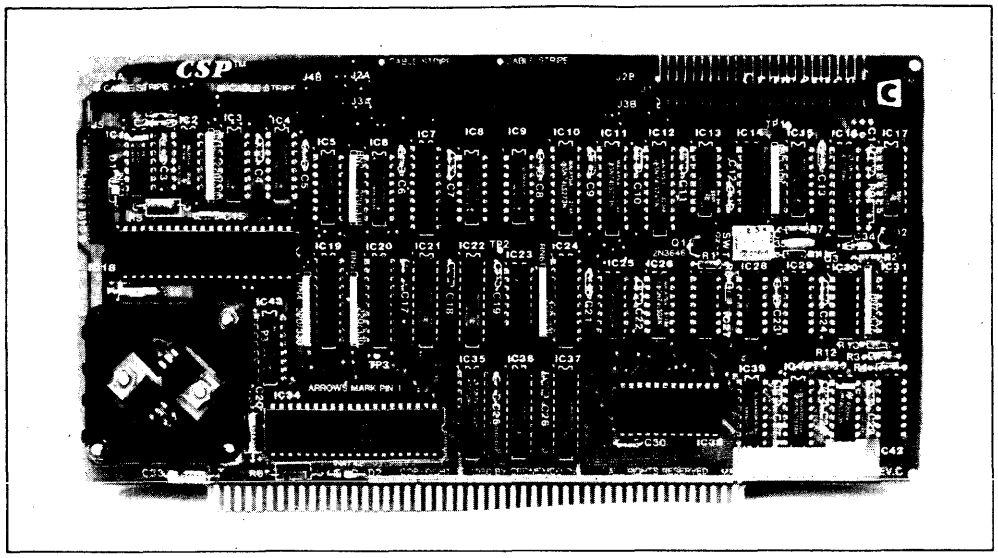

This card interfaces to the C-bus of our I/O Processor card and provides general-purpose I/O capability as well as serial communications capability.

The card has three parallel I/O ports and two serial ports.

Two of the three parallel ports are TTL-buffered for general usage. The third port is buffered by a FIFO to permit inputting and outputting of rapid bursts of data. For example, up to 16 bytes can be stored in the FIFO at I/O clock rates up to 10 megabytes/second.

The two serial ports are single full duplex serial channels that facilitate communications applications. One port is for synchronous communication (SDLC or HDLC) at rates up to 800K bits/second.

The second serial port is a serial RS-232C interface for asynchronous communication. It has a programmable data rate of up to 9600 bits/second.

TECHNICAL SPECIFICATIONS

CSP Controller:
Cromemco Input/Output Processor (IOP) board

Parallel Interface:
Compatible with Cromemco Model TDS 9 Track Tape Drive

Parallel Output:
Data: 8 bits wide plus an End of Transfer bit; 16 by 9 bit FIFO buffered; approximately 200K bytes/second maximum continuous (Z-80A I/O Block Move), approximately 10M bytes/second maximum burst (FIFO limited).

Parallel Input:
Data: 8 bits wide; 16 by 8 bit FIFO buffered; approximately 200K bytes/second maximum continuous (Z-80A I/O Block Move), approximately 10K bytes/second maximum burst (FIFO limited).
General Purpose: 16 status bits in two input bytes; vectored maskable C-bus interrupt requests generated on software selected bit states.
Termination: TTL levels; 220/330-ohm terminations on all data and status lines.

Cartridge Modes:
Serial Asynchronous, Synchronous Byte (Bisync) and Synchronous Bit (SDLC) under the management of a Z-80 SIO device: vectored maskable C-bus interrupt requests generated on software-selected status conditions.

Cartridge I/O:
Maximum data rate approximately 800 kbits/second; TxC and RxC clocks supplied by Cartridge peripheral; TTL levels with 220/330-ohm terminations on input lines.

Terminal Interface:
RS-232C DTE connection

Terminal Modes:
Same as Cartridge Modes above although Asynchronous Mode would typically be selected.

Terminal I/O:
Maximum data rate 9,600 bits/second; TxC and RxC supplied by an on-board timer with software selectable bit rate: RS-232C levels; circuits RTS, CTS, DSR and DCD may be used either for modem control or for general purpose RS-232C level I/O.

Bus:
Standard-100 (S-100) Cromemco Bus (C-bus)

Power Requirements:
+8 VDC @ 1.5A (max)
+18 VDC @ 25 mA (max)
−18 VDC @ 25 mA (max)

Operating Environment:
0–55 degrees Centigrade

© IC MASTER 1984

MODEL D+7A I/O
Multi-Channel Microcomputer Analog Interface

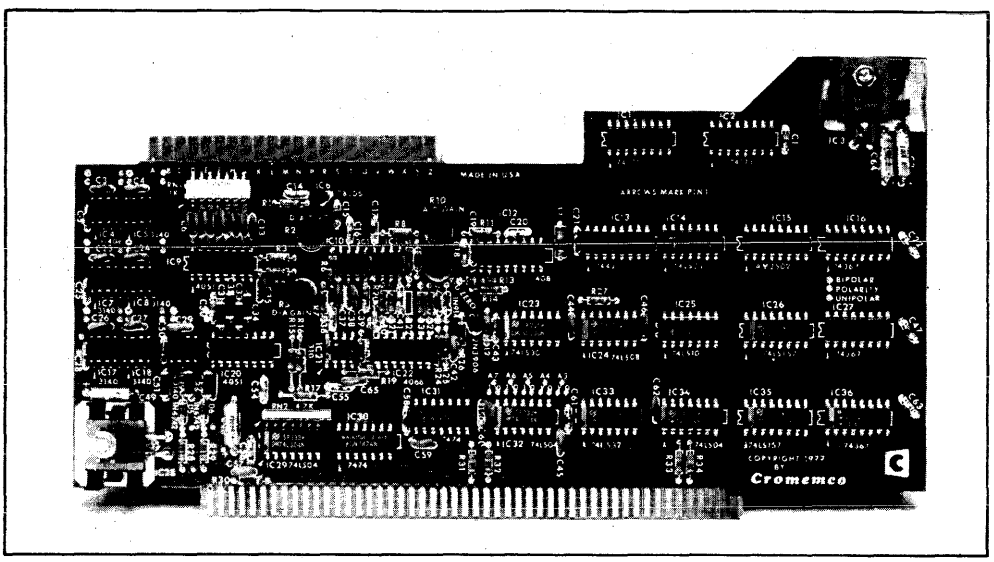

Cromemco's high performance D+7A I/O gives you a way to get analog information into and out of a microcomputer easily, quickly and inexpensively. The Model D+7A offers 7 channels of 8-bit analog-to-digital conversions (to input analog data to the computer); 7 channels of digital-to-analog conversion (to output computer data in analog form); an 8-bit parallel I/O port to input and output data in digital form; and a fast conversion time of 5.5 microseconds.

A MULTITUDE OF USES

The D+7A makes it easy to use a computer for such jobs as process control, digital filtering, oscilloscope graphics, speech recognition, and speech and music synthesis.

The D+7A lets you input and output analog data with a variety of devices; such as measurement instruments, machine tools, transducers, control systems, motors, recorders, and plotters.

NO FURTHER SOFTWARE NEEDED

The D+7A I/O plugs directly into Cromemco microcomputers. Analog signal range is from – 2.56 to 2.54 volts (20-millivolt increments) on both input and output sides.

Simple Input and Output instructions initiate A/D conversion and read the ensuing 8 bits of data in or out. No further software is required. During conversion the D+7A holds down the computer "Ready" line.

Each D+7A includes a connector to connect to the 8 input and 8 output ports.

TECHNICAL SPECIFICATIONS

Analog Input Ports:
- Number of input ports: 7
- Input voltage range: – 2.56 to + 2.54 volts
- Input bias current: 2 microamps max.
- Input impedance:
  - 20 Megohms .001 F, 1 kHz sample rate
  - 2 Megohms .001 F, 10 kHz sample rate
- Resolution: 8 bits
- Conversion time: 5.5 microseconds
- Accuracy: + 20 millivolts

Analog Output Ports:
- Number of output ports: 7
- Output voltage range: – 2.56 to + 2.54 volts

Output Impedance: 0.25 ohm
- Maximum load current: 1.5 mA
- Resolution: 8 bits
- Conversion time: 5.5 microseconds
- Accuracy: + 20 millivolts
- Drift rate: Less than 10 mV/sec at 25 C

Parallel I/O Port:
- Input port: 8 bits
- Output port: 8 bits
- Input load: One TTL equivalent
- Output drive: 10 TTL loads

Bus:
- S-100

Power Requirements:
- + 8 volts @ 0.4A
- + 18 volts @ 30 mA
- – 18 volts @ 60 mA

Operating Environment:
- 0–55 degrees Centigrade

MODEL DAC12
12-Bit D/A Converter

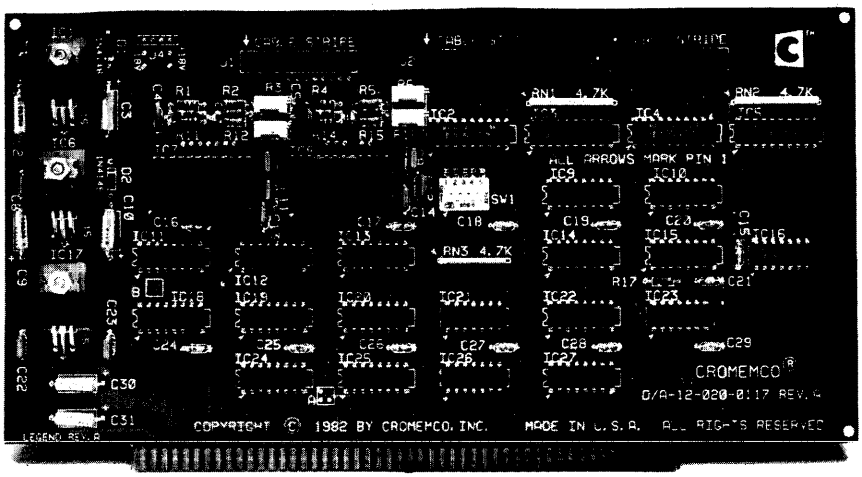

The Model DAC-12 D/A I/O board provides two independent channels of D to A conversion with a conversion time of 5 microseconds.

TECHNICAL SPECIFICATIONS

D/A converter section

Resolution:
12 bit

Analog Output:
Bipolar voltage: +10V, +5V, +2.5V
Unipolar voltage: 0 to 5V, 0 to 10V
Impedance: 0.05 ohm typical

Conversion Speed (settling time to +0.01% FSR):
+10V output: 5 microsec.

Accuracy:
Offset error/gain error: adjustable to zero
Linearity error: +1/2 LSB (max)

Operating temperature range (no missing codes):
0 to 50 C

Drift:
Gain ±7 ppm/degrees Centigrade (max.)
Linearity ±20 ppm/FSR/degrees Centigrade

Parallel port section

Number of Ports:
2

Output Port Handshake:
Output strobe line on each port

Output Port Drive:
7 TTL unit loads

Sense Line Input Loading:
4 TTL unit loads

Miscellaneous

Bus:
S-100 (IEEE-696)

Power Requirements:
+8 volts: 350 mA
+18 volts: 120 mA
−18 volts: 100 mA

Operating Environment:
0–55 degrees Centigrade

© IC MASTER 1984

MODEL ADC12
12-Bit A/D Converter

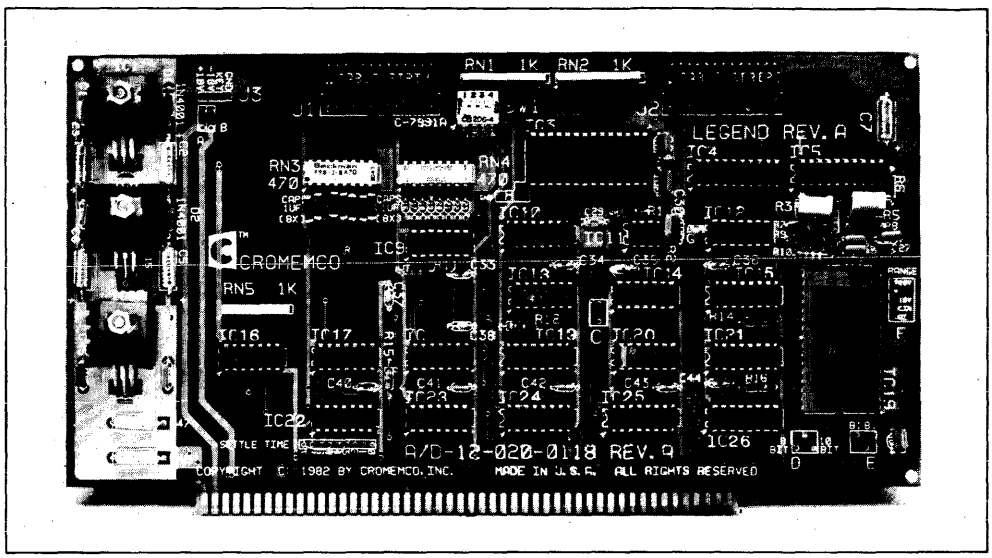

The Model ADC-12 A/D I/O board provides 16 channels of A-to-D conversion with a conversion time of 30 microseconds.

TECHNICAL SPECIFICATIONS

A/C converter section

Resolution: 12 bit
Analog input voltage ranges:
Bipolar: +2.5, +5, +10
Unipolar: 0 to 5, 0 to 10

Data Acquisition Time:
30 microseconds

Transfer Characteristics Error:
Offset error/gain error: adjustable to zero
Linearity error: +1/2 LSB (max)

Operating temperature range (no missing codes):
0 to 50 degrees Centigrade

Drift:
Gain ±30 ppm/degrees C
Linearity (monotonic operation guaranteed):
±3 ppm/FSR/degrees Centigrade

Parallel port section

Number of Sense Lines:
4

Number of Output Ports:
2

Output Port Handshake:
Output strobe line on each port

Output Port Drive:
7 TTL unit loads

Sense Line Input Loading:
4 TTL unit loads

Miscellaneous

Bus:
S-100 (IEEE-696)

Power Requirements:
+8 volts: 250 mA
+18 volts: 120 mA
−18 volts: 100 mA

Operating Environment:
0 to 55 degrees Centigrade

MODEL WDI-II
Winchester Disk Interface

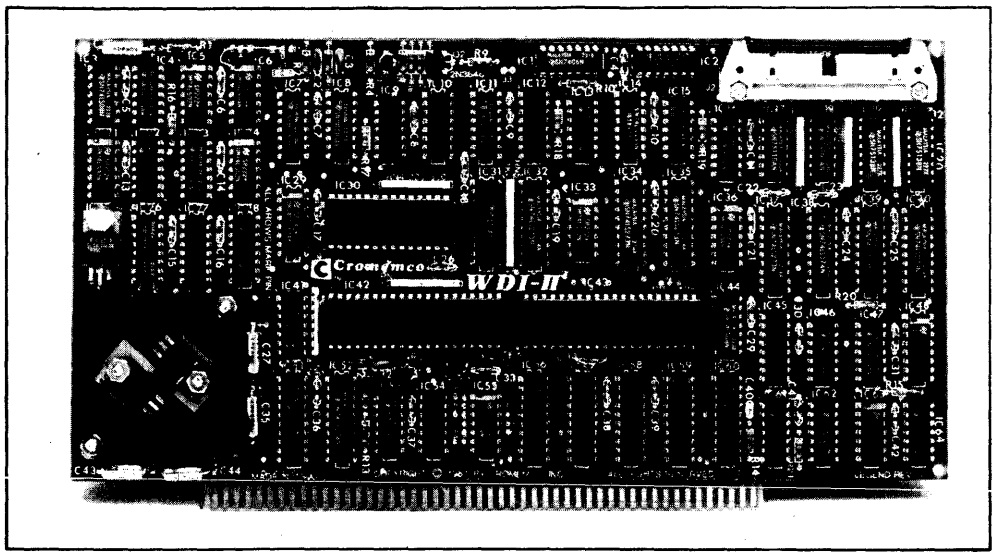

The WDI provides an interface between the system S-100 Bus and a hard disk drive. The WDI circuits, together with the operating system, format and control data transfer between the system main memory and the disk surface media. High speed memory-to-memory data transfers may be made between addressed locations in system main memory. The extended address function allows extended addressing using address-as-data information received from the S-100 bus.

The WDI uses the Cromemco daisy-chain system to set up priorities between boards for system bus requests and system interrupts. WDI bus requests are generated by the Address Generator (DMA). WDI interrupts are generated by the Address Generator, CTC (Counter/Timer Circuit), and the PIO Parallel Input/Output) controller circuits.

SYSTEM COMPATIBILITY

The WDI is designed for use with all Cromemco, S-100 Bus systems. All Cromemco Hard Disk Drives are compatible with the WDI.

TECHNICAL SPECIFICATIONS

Modes and Functions:
- Hard Disk Data Transfer
- Memory-to-Memory Data Transfer
- Extended Addressing

Disk Drive Compatibility:
- Cromemco Hard Disk Drives

Disk Drive Capacity:
- 4 Maximum

Bus:
- S-100

Power Requirements:
- +8 volts @ 1.4A
- −18 volts @ 0.1A

Operating Environment:
- 0–55 degrees Centigrade

© IC MASTER 1984

MODEL 64FDC
Floppy Disk Controller

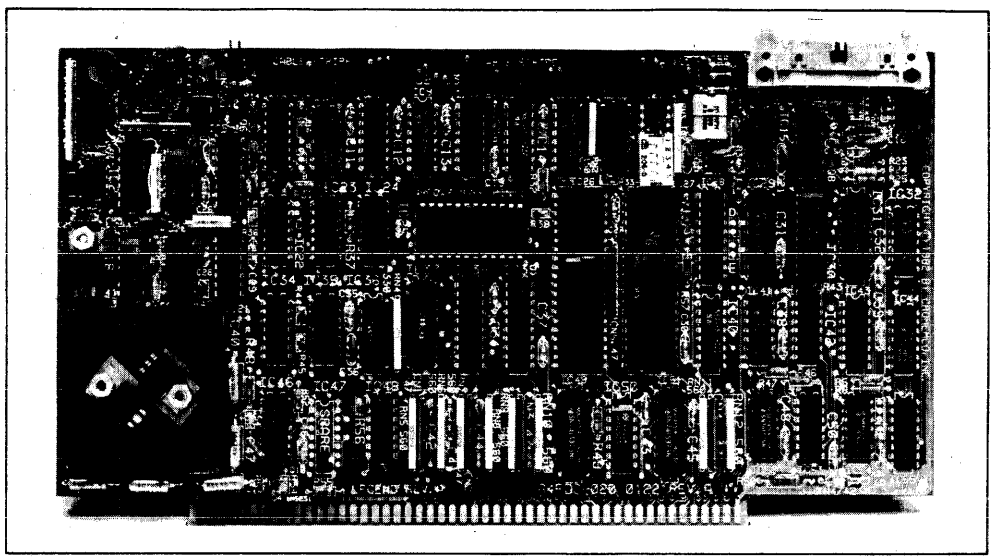

The Cromemco Model 64FDC floppy disk controller board provides a complete system for floppy disk operation including serial I/O for an RS-232 terminal, a pre-programmed Read Only Memory with system bootstrap and diagnostic routines, and full read/write/format capability for any combination of single- or double-sided, single- or double-density five inch or eight inch floppy disk drives. The Model 64FDC normally handles up to four drives in a daisy-chain configuration. Up to sixteen drives may be connected if the drives decode the four drive select lines.

An important feature of the 64FDC is its support of the new slimline eight-inch drives such as are included in the Cromemco System Three. The Model 64FDC includes standard write precompensation to ensure high reliability on the inner tracks of a wider variety of eight-inch drives.

The 64FDC includes a 512 millisecond real time clock for use with the CROMIX multi-user, multi-tasking operating system.

The data recovery circuit on the 64FDC uses a patented phase locked loop to optimize performance for each size and density diskette. The 64FDC also provides an upgrade path for using higher data rates with future generation five-inch floppy disk drives.

TECHNICAL SPECIFICATIONS

Disk Controller:
- Maximum number of 5¼" drives: 4
- Maximum number of 8" drives: 4
- Bootstrap/monitor firmware: 4K byte ROM monitor/boot/diagnostic
- Controller circuitry: MOS LSI

Serial I/O Port:
- I/O levels: RS-232 or 20 mA current loop
- Low baud range: 110–9600 baud (software selectable)
- High baud range: 880–76,800 (software selectable)

Diskette Format:
- Size: 5¼" or 8"
- Sides: Single or double
- Density: Single (FM) or double (MFM) (software selectable)
- Data recovery: analog phase-lock loop (U.S. Patent 4 319 200)
- Write precompensation: Crystal controlled delay generator

Formatted Disk Capacity:

	5¼"	8"
Single-sided, single-density	83K	243K
Single-sided, double-density	190K	600K
Double-sided, single-density	173K	594K
Double-sided, double-density	390K	1216K

Interval Timers:
- Number of timers: 5
- Timer range: 0–16.32 msec (software selectable)
- Timer resolution: 64 microseconds

Bus: S-100

Disk controller type: 1793-B02

UART type: 5501

ROM type: 2332

Power requirements: +8 volts @ 1.5A
+18 volts @ 100 mA
−18 volts @ 100 ma

Operating environment: 0–55 degrees Centigrade

MODEL 4PIO
4 Port I/O Isolated Parallel Interface

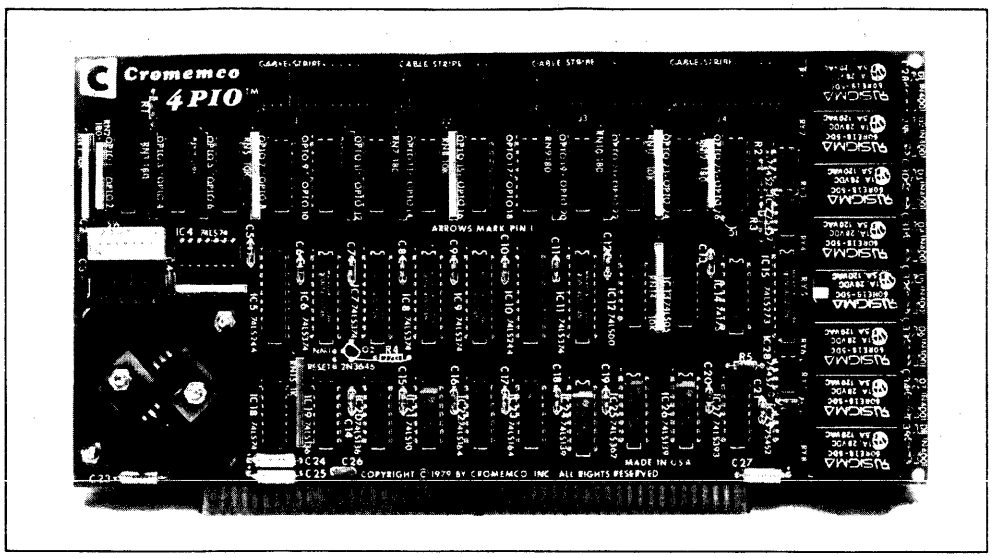

The Cromemco 4PIO Parallel Interface Card allows interfacing with complete electrical isolation from the host microcomputer. Therefore, problems with ground noise and ground loops can be completely eliminated in instrumentation, communications, or process control systems. In addition, potentially damaging transients can be safely isolated from the computer system.

The Cromemco 4PIO parallel interface card includes:

- 24 opto-isolated input channels
- 16 opto-isolated output channels
- 8 relay-isolated output channels
- 11 opto-isolated strobe/handshake lines
- 1 opto-isolated reset line

The 4PIO services these isolated I/O channels through four parallel, 8-bit I/O ports. The addresses of these I/O ports are switch selectable (in blocks of four) by means of a switch conveniently located on the 4PIO interface card.

ISOLATED CONNECTOR PINS

The isolated I/O channels of the 4PIO are brought to four connectors on the top edge of the card. NO PIN ON ANY OF THESE CONNECTORS IS DIRECTLY CONNECTED TO THE COMPUTER CIRCUITRY. Every active pin is electrically isolated by means of an opto-isolator or relay.

TECHNICAL SPECIFICATIONS

Parallel I/O Ports:
- Number of bidirectional ports: 4
- I/O port width: 8 bits
- Number of opto-isolated input ports: 3
- Number of opto-isolated output ports: 2
- Number of relay-isolated output ports: 1

I/O Strobe Signals and Reset:
- Number of I/O strobe bits: 11
- Strobe signal isolation: opto-isolated
- Reset line: opto-isolated

Opto-isolated I/O:
- Number of opto-isolators: 52
- Opto-isolator type: MCT66
- Signal levels: TTL

Relay Outputs:
- Number of relay outputs: 8
- Contact type: SPDT
- Contact voltage: 28V (AC or DC)
- Contact current: 1A

Bus:
- S-100

Power requirements:
- +8 volts @ 2.3A

Operating environment:
- 0–55 degrees Centigrade

© IC MASTER 1984

MODEL 8PIO
8 Port I/O Multi-Channel Microcomputer Parallel Interface

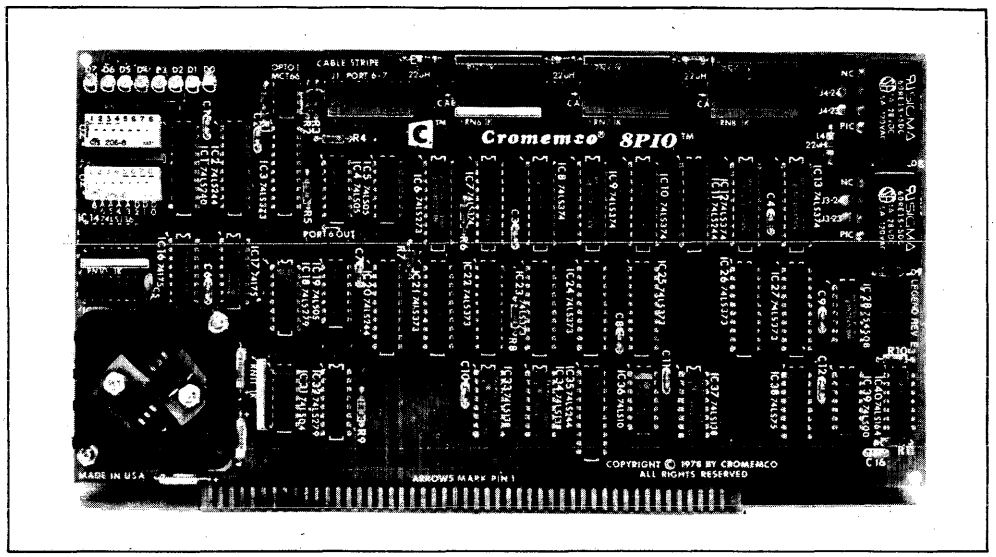

SIMPLIFIED PARALLEL INTERFACING

Parallel interfacing was never easier than with the Cromemco 8PIO Parallel Interface Card.

The 8PIO provides 8 bidirectional 8-bit I/O ports that can be used singly or coupled together to form longer word lengths.

For convenience, input and output status flags for handshake purposes are grouped together on one port and may be accessed with one input or output statement.

Strobe pulses can be issued after each 8-bit transfer or may be delayed until the proper word length has been formed.

Other features include 8 sense switches and 8 LEDs on the highest selected I/O port on the card, and 2 bits of opto-isolated input and 2 bits of relay-driven output.

The 8 I/O ports may be located on any 8-port I/O boundary.

TECHNICAL SPECIFICATIONS

Parallel I/O Ports:
- Number of bidirectional ports: 8
- I/O port width: 8 bits
- Input load: 4 TTL loads
- Output drive: 4 TTL loads

Input Strobes:
- Latched

Output Strobes:
- Delay: 1 μsec after new data valid
- Width: 1.5 μsec; negative true
- 1 strobe pulse per port

Opto-Isolator Input:
- Number of opto inputs: 2 bits, TTL level inputs

Relay Outputs:
- Number of relay outputs: 2 bits
- Contact voltage: 28V (AC or DC)
- Contact current: 1A
- Contact type: SPDT

Bus:
- S-100

Power requirements:
- +8 volts @ 1.5A

Operating environment:
- 0–55 degrees Centigrade

MODEL TRT
TU-ART Digital Interface

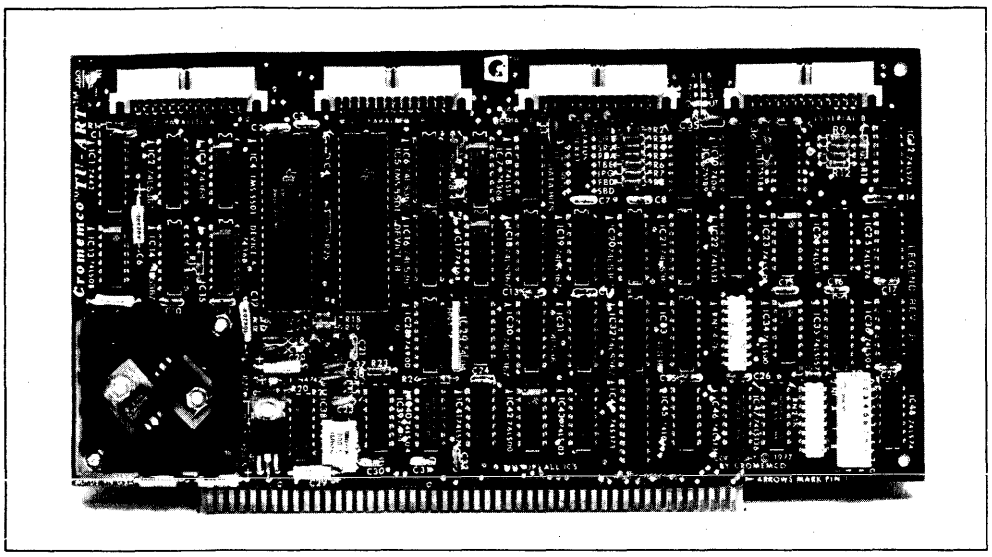

FAST – SOFTWARE SELECTABLE BAUD RATES UP TO 76,800 BAUD

The TU-ART digital interface is a convenient interface to allow coupling to two terminals or other devices, such as line printers or modems.

It has two serial I/O ports, two 8-bit parallel I/O ports, and 10 independently programmable interval timers.

Baud rates are software-selectable from 110 to 76,800 baud.

VECTORED INTERRUPTS

Another special convenience of the TU-ART is its vectored, prioritized interrupts. It is able to support the powerful vectored interrupt structure of the Z-80A microprocessor.

INTERVAL TIMERS

The 10 interval timers have real-time clock capability; therefore, they offer a wide range of control possibilities.

Each timer range is from 0 to 16.32 milliseconds and is software selectable.

See Support System Components Section, page 37, for information on cables to be used with this card.

TECHNICAL SPECIFICATIONS

Serial I/O Ports:
- Number of ports: 2
- I/O levels: RS-232 or 20 mA current loop
- Low baud range: 100 to 9600 baud (software selectable)
- igh baud range: 880–76,800 baud (software selectable)

Parallel I/O Ports:
- Number of ports: 2
- Input ports: 8 bits
- Output ports: 8 bits
- Input load: One TTL equivalent
- Output drive: 20 TTL loads

Interval Timers:
- Number of timers: 10
- Timer range: 0 to 16.32 msec (software-selectable)
- Timer resolution: 64 microseconds

Vectored Interrupts:
- Number of restart locations (8080 mode): 8
- Number of restart locations (Z-80A mode): 65,536
- Prioritization of TU-ART ports: Internally prioritized
- Prioritization for multiple TU-ARTs: daisy-chaining

UART type:
- 5501

Bus:
- S-100

Power requirements:
- +8 volts @ 1.0A
- +18 volts @ 80 mA
- −18 volts @ 40 mA

Operating Environment:
- 0–55 degrees Centigrade

© IC MASTER 1984

GPIB
General Purpose Interface Bus

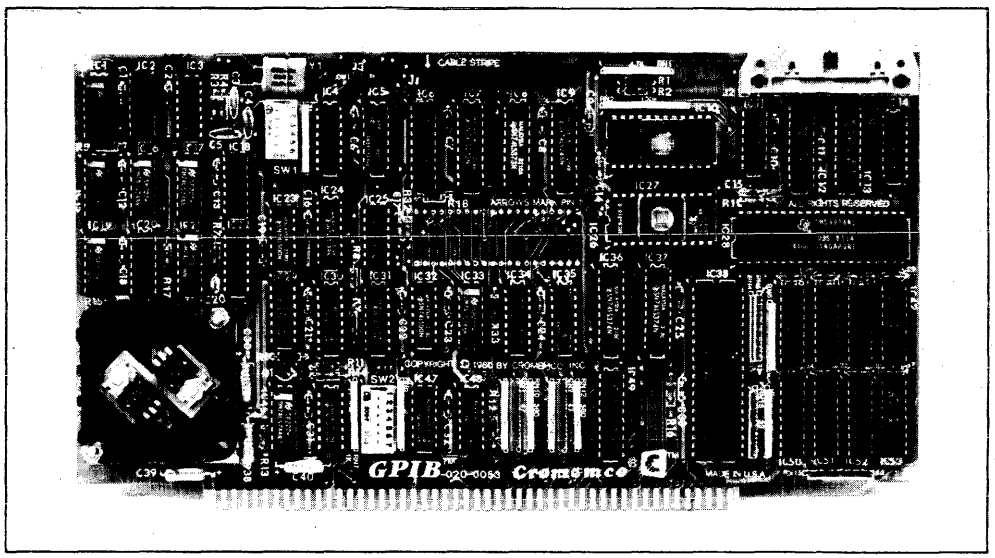

This card enables you to connect your Cromemco computer to measuring and control equipment that has an IEEE-488 port, the communications standard in instrumentation applications. This allows arrangements such as a computer-operated measuring and control system to be devised.

The Cromemco GPIB card contains a dedicated Z-80A processor along with 4K of RAM and two 2716 sockets that provide for 4K of EPROM. Connectors at the top of the card are for the IEEE-488 interface. There is also a connection for an external TTL parallel I/O port. Switches select the I/O address through which the computer communicates with the card and the address to which the card responds.

The GPIB card can interrupt the host computer over the S-100 bus with either a software maskable or nonmaskable interrupt and is equipped with the Cromemco interrupt priority daisy chain. The dedicated Z-80A on the card can be interrupted by the host, the GPIB chip, or the reception of data from the external input port. On-board priority determination is fully software defined, employing a hardware poll of the possible interrupt devices over a single input port.

TECHNICAL SPECIFICATIONS

IEEE-488 Functions:

C	Controller with Pass Control capability
T, TE, L, LE	Talker and/or Listener
SH, AH	Automatic Source and Acceptor Handshake
DC, DT	Device Clear and Device Trigger
SR	Service Request
PP	Parallel Poll
RL	Remote/Local with Remote Lockout

Processor:
Z-80A clocked at 4.000 MHz

ROM Memory:
Socket space for 4K/bytes of TI 2516, Intel 2716, or their generic equivalents (user supplied)

RAM Memory:
4K/bytes of 9124 (1K × 4) static RAM (included)

S-100 Bus Interface:
Four 8-bit parallel I/O ports; the GPIB card may issue non-maskable interrupt requests to the Host; the Host may issue maskable interrupt requests to the card.

GPIB Bus Interface:
The 24 IEEE-488 bus lines interface to a GPIB card connector.

Utility Interface:
One 8-bit parallel input port and one 8-bit parallel output port provide a general purpose interface at a GPIB card connector.

LSI Device Types:
Z-80A CPU, TMS 9914 GPIB Adapter

Power Requirements:
+8 VDC @ 1.5A (max)
± 18 volts not used

Operating Environment:
0–55 degrees Centigrade

© IC MASTER 1984

MODEL PRI
Printer Interface

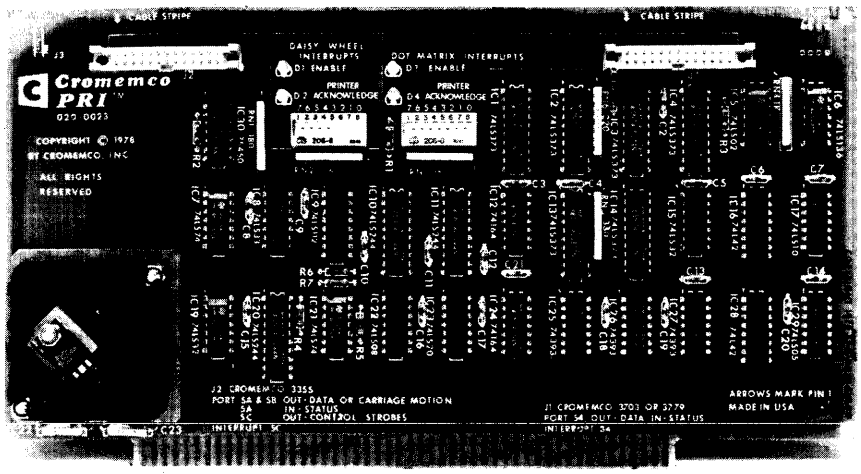

A VERSATILE CARD WITH TWO INTERFACES ON ONE CARD

With this interface card, it's easy to connect either dot-matrix or full letter printers to your computer system.

For use with these printers, the PRI is designed with two interfaces. One uses the "Centronics parallel" convention and connects to the Cromemco Models 3715 or 3703 dot-matrix printers.

The second interface connects to the Cromemco Model 3355B letter quality printer.

This second interface has built-in ribbon-lift and ribbon-lowering circuitry to free the software overhead normally required for this function.

Each of the two interfaces has an individual cable connection on the top edge of the card.

The Cromemco PRI card also includes full interrupt capability for use in multi-user systems.

TECHNICAL SPECIFICATIONS

Output Port Addresses:
54, 5A, 5B, 5C

Input Port Addresses:
54, 5A

Alternate Port Addresses:
Optional DIP switch

Software Support:
Cromemco CDOS, CROMIX

Bus:
S-100

Power Requirements:
+8 volts @ 1.0A

Operating Environment:
0–55 degrees Centigrade

© IC MASTER 1984

MODEL CTI
Terminal Interface

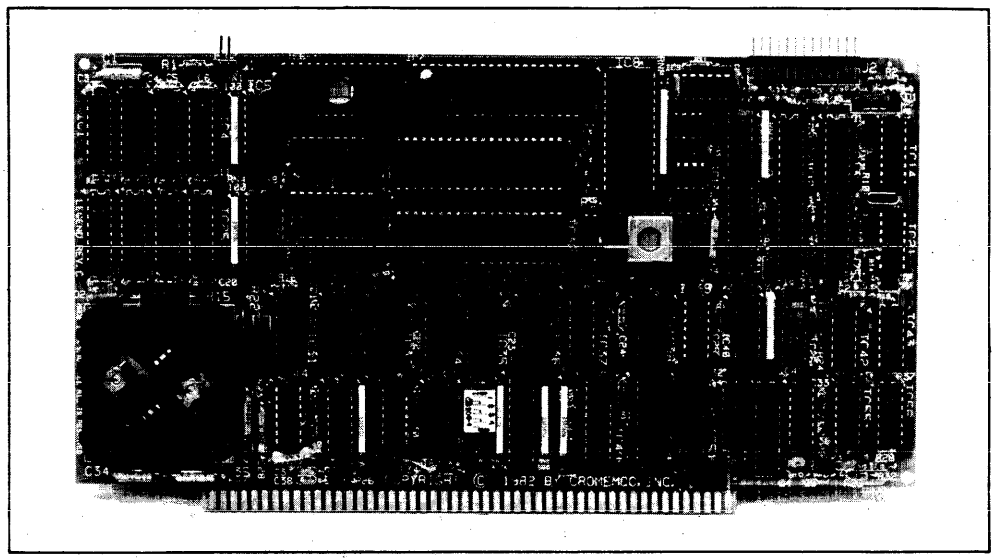

The Cromemco CTI Terminal Interface is an S-100 based board designed for use with Cromemco's C-1 video display and CKB series keyboard. The CTI card contains all the display electronics for this full-featured "smart terminal." Four character sets (American, American Bold, Graphics, and Scientific) are supplied in 8K of ROM on the CTI. The ROM can be changed to accommodate special character sets. The CTI can also be used to emulate a Cromemco 3102 CRT terminal. Through its S-100 bus interface, the CTI has an effective data transfer rate of more than 25,000 baud. On-board RAM and CPU provides full screen buffering and editing capabilities.

The CTI Terminal Interface card also features the Intel 8275 controller, a high performance DMA Controller, and a versatile UART (for keyboard and serial printer use). For communications to host, the board provides standard S-100 DATA and STATUS port protocols.

TECHNICAL SPECIFICATIONS

Format:
80 characters by 25 lines. Optional status line.

Character Type:
Alphanumeric and Graphic. 512 displayable ASCII characters within 8 x 9 dot matrix. Descenders or lower case characters. Alphanumeric and Graphic characters can be mixed on the screen.

Character Display:
Standard or inverse video. User Programmable.

Tabulation:
Fixed TAB stops

Cursor:
Four types: underline, blinking, underline non-blinking, reverse video blinking, reverse video non-blinking.

Host Communications Interface:
S-100 Bus status and data port

Transmission Rate:
Up to 25,000 baud

Display: (Model C-1)
A standard NTSC video monitor with 12" P31 green phosphor non-glare screen. Optional swivel and tilt stand. All power is supplied by CTI board. Connects to CTI board with a single cable. Monitor back panel has connectors for keyboard, auxiliary serial port.

Bell:
Audible beep from keyboard upon receipt of control G. The continuous alarm On/Off feature is included.

Keyboard:
Two keyboards are available. A 60-key ANSI-compatible TTY/Typewriter compatible layout (Model CKBA) or a 97-key, standard ASCII with 20 dedicated function keys, selectric layout and numeric pad (Model CKBC). Both feature auto repeat, two-key rollover, and alpha lock. The keyboard cable is a 4-wire telephone-type coiled cord. The keyboard will operate up to 25 inches from the C-1 terminal. Other features include a programmable keyclick and automatic character repetition.

Bus:
Standard 100 (S-100)

Operating Environment:
0–55 degrees Centigrade

Power Requirements:
8 volts @ .5A
+ 18 volts @ 1.5A
– 18 volts @ .1A

© IC MASTER 1984

MODEL SDI
Color Graphics Interface

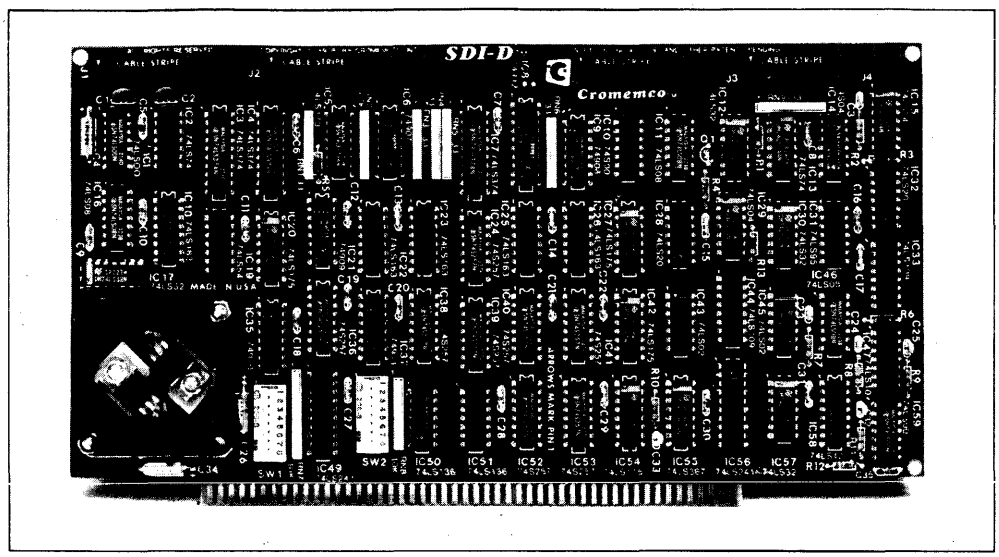

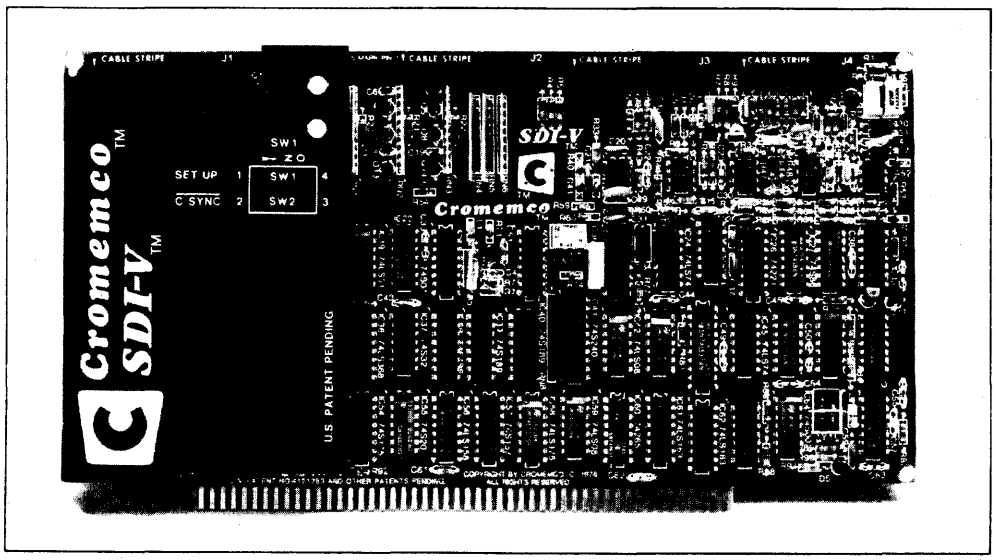

The SDI graphics interface features high resolution and a wide range of color choices.

It is a fully-integrated way to display the memory content of Cromemco computer systems in beautiful and meaningful color choices. Use of color and the high resolution of the image simplify examination or discussion. Various parts of the scan can be displayed in any of 4096 colors.

The interface consists of two circuit cards that plug directly into any Cromemco computer, without alteration of the computer. All necessary outputs to the monitors are provided by the interface.

The display device is typically an RGB Monitor used in the industry or available from Cromemco (Model RGB-13).

HIGH RESOLUTION

The SDI interface can be used to display images with up to 754 x 482-point resolution. This resolution is at least the equal of a high quality broadcast-TV picture.

COLOR OR B/W

The interface can be used to display an image in either color or black-and-white—or in both simultaneously.

In color any 16 colors from a palette of 4096 colors can be used in the picture. In black-and-white any 16 shades of gray can be used.

HOW THE SDI MAPS

The SDI uses direct memory access to display the content of a display memory. Each pixel of the display may be mapped either from one nybble (4 bits) or one bit of the display memory. The mapping mode (nybble or bit) is software-selectable—in fact, part of a picture may be displayed in one mode and part in the other.

© IC MASTER 1984

The display memory may consist of either a 12K or 48K memory.

The combination of mapping modes and memory result in four basic modes of operation as shown below:

MODEL SDI RESOLUTION (HORIZONTAL×VERTICAL) IN EACH OF FOUR MODES OF OPERATION

	Display Memory Size	
	12K	48K
Nybble-Mapped	189 × 121	378 × 242
Bit-Mapped	377 × 242	754 × 482

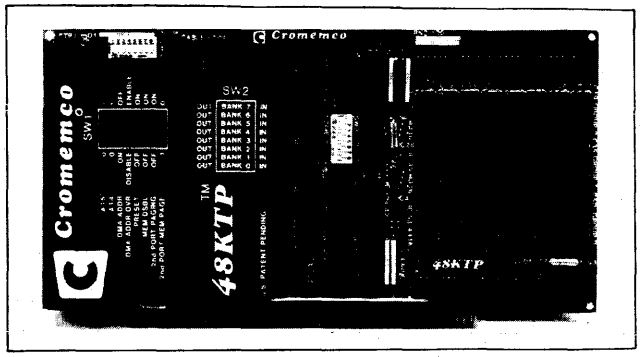

SDI OUTPUTS

The Model SDI provides three separate analog output signals to drive the Red, Green, and Blue guns of a high-quality RGB monitor. The three separate outputs, rather than one composite output, are used to preserve the full resolution of the picture.

In nybble mapped operations each 4-bit nybble can select one of 4096 colors as determined by a mapping RAM. The contents of the mapping RAM can be changed dynamically, under software control, by issuing OUTPUT instructions to the SDI.

TV COMPATIBILITY

The Model SDI also provides all signals required to serve as input to a colorizer or color modulator in a TV broadcast studio.

RGB MONITOR

The Cromemco RGB (red/green/blue) Color Monitor is specially adapted for use with the SDI Interface.

48K DISPLAY MEMORY

The 48K two-port memory card (Model 48KTP) has been developed for use with the SDI. Picture information is accessible by the SDI through a connector on the top of the memory cards. The cards plug directly into the Cromemco computer.

The computer resident memory may also be used as the display memory, although at the expense of mapping speed. This reduction occurs because the CPU must suspend operation when the SDI accesses the resident memory. The result is approximately 55% CPU utilization for a 12K-memory picture and 6% utilization for a 48K-memory picture.

Use of the special two-port memory assures 75% to 100% utilization, depending on the application software.

DESIGNED TO SURPASS TV QUALITY FOR LONG-TERM APPLICATION

In its high-resolution mode, the SDI displays a picture having a 754 × 482-pixel resolution. This format corresponds to and is compatible with NTSC TV systems practice in that 482 lines are normally displayed in a nominal 525-line system. The 754 points in the horizontal direction give a resolution equal to or better than that of the vertical direction.

The result of the above approach is that the high-resolution picture displayed using the SDI interface is at least equal in resolution to a 525-line color TV picture.

TECHNICAL SPECIFICATIONS

Model SDI
Color Graphics Interface

Available Models: SDI-NTSC; SDI-PAL

Mapping Modes: Bit or nybble; software selected

Resolution: 754 × 482 pixels maximum using 48K display memory. 12K display memory may also be used at lower resolution (see text).

Color: Any 16 of 4096 colors or any 16 shades of gray may be displayed.

Outputs: Three analog outputs for RGB monitor

Recommended Display Memory: Cromemco 48KTP two-port memory

Sync Signal: Composite Sync signal is switch-selectable. Separate RS-170 Sync signal available.

System Bus: S-100

Power Requirements: +8 volts @ 2.2A

Operating Environment: 0–55 degrees Centigrade

Model RGB-13 Color Monitor

Max. Effective Screen Size: 255mm × 190mm

Technology: All solid state except for CRT

CRT: 13" shadow mask, delta gun

Video Signal Input: RGB 0.3 to 2.0 volts, 75 ohm. Fully compatible with Cromemco Model SDI interface outputs.

Video Amplifier Bandwidth: 50 Hz to 15 MHz ± 3 dB

Power Requirements: 120 or 220 volts, 50/60 Hz

Power Consumption: 250 VA

Dimensions: 18" × 15-1/4" × 14-3/4"

Weight: 23 Kg

Operating Environment: – 5– 40 degrees Centigrade

Model 48KTP Two Port Memory

Memory Capacity: 48K bytes

Bus: S-100

Power Requirements: +8 volts @ 1.6A

Operating Environment: 0–55 degrees Centigrade

MODEL SDD
Color Digitizer Board

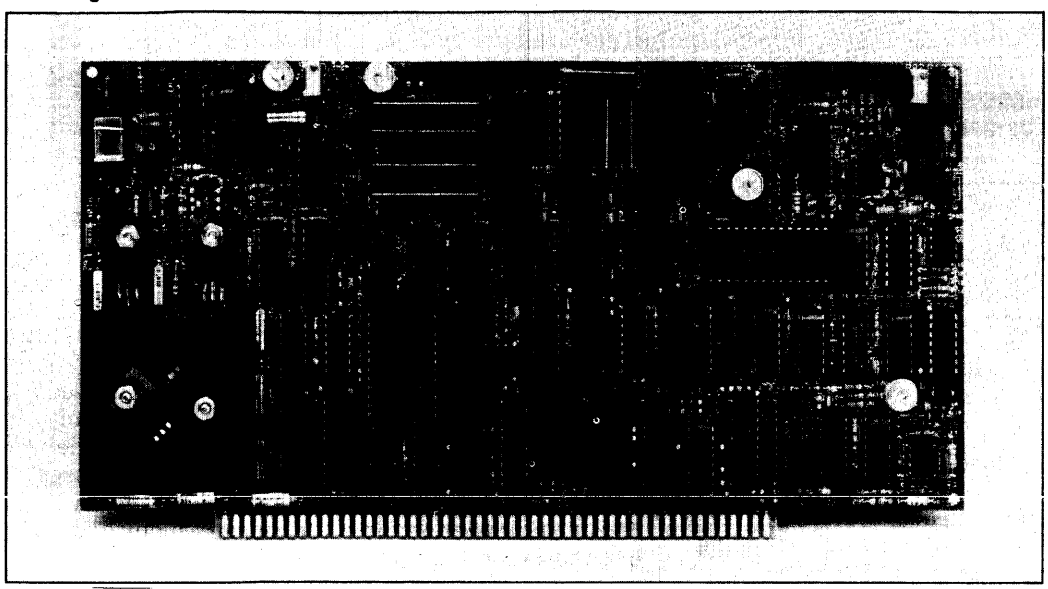

MODEL SDD COLOR DIGITIZER BOARD

Cromemco's new Model SDD Color Digitizer Board provides a low cost, easy-to-use method for digitizing images in color or black-and-white. With the SDD Interface and a standard television camera, images with up to 754 x 484-point resolution can be digitized and stored in memory or on disk. Images can then be recalled and displayed quickly and easily on a color monitor.

PROFESSIONAL APPLICATIONS

This capability makes Cromemco Color Graphics systems ideal for applications that require sophisticated image processing, such as personnel records, inventory control, security systems, or medical imaging. And this powerful capability is available at a cost well below that of any other system on the market today.

HIGH RESOLUTION GRAPHICS SYSTEMS

The SDD Color Digitizer adds a powerful, new capability to Cromemco's high resolution, color graphics computer systems. Cromemco Color Graphics Systems provide professional level resolution, enormous color range, easy-to-use software, and conformance to the NTSC standard for the TV broadcast industry.

OPERATING MODES

The SDD can digitize in five different modes.

Mode	Sample Use
Unprocessed Composite Video Input	For waveform analysis in debugging a system.
Red Video Component Green Video Component Blue Video Component	To extend basic color range in TSDI applications.
Composite Color Conversion with Inverse Color Map Lookup	For normal use.

All of these signals are digitized with 8 bits of resolution per pixel for a high or low resolution image. Gray scale images can be created from any of these signals by setting the chrominance level to zero under software control.

VIDEO SAMPLING CAPABILITY

A digital phase locked loop is used for timing all video sampling, dividing the horizontal line time into 910 pixel locations. This is the same pixel rate as the high resolution mode of Cromemco's Model SDI Color Graphics Interface. Thus 754 samples may be taken during the unblanked line time.

In lower resolution modes, the sampling delay may be moved in multiples of this basic sample spacing.

The sampling delay position may be arbitrarily changed at will with an output port and does not have to follow a fixed pattern.

SAMPLE RATE

With the SDD, 1, 3, 6, or 12 samples may be taken per horizontal image line.

Using a Z-80 at 4 MHz and an SDI display, gray scale, high resolution, and color image generation can use 3 samples per line and waveform display can use 12 samples per line.

IMAGE GENERATION SPEED

Samples per Line	Image Size	Seconds to Digitize*
3	378 × 242	4
3	754 × 484	8
12	754 × 256	1

*Based on a Z80 processor.

© IC MASTER 1984

ADDITIONAL FEATURES

The SDD has an advanced design IC color demodulator, providing excellent performance and permitting software control of color amplitude and tint.

The input signal gain is controlled by a digital port with both manual and automatic level control modes available. Reference white level can be varied in both modes. Automatic video level control operates on the incoming sync pulse amplitude and is essentially unaffected by incoming image content variation.

All circuits incorporate DC restoration of the black level.

The digitizer produces an 8-bit data word for each pixel sample, which is output through the inverse map in all modes. In color conversion modes, the inverse map accepts 4 bits for each of the 3 primary colors and provides the 8-bit word to send to the CPU for each of the 4096 possible combinations. In single channel conversion modes where a single color component is used (red, green or blue), the inverse color map receives an 8-bit word from the A/D circuitry. The inverse map then converts to an 8-bit output word. Only 8 of the 12 inverse map input bits are used in this mode. A total of 16 different arbitrary mapping functions can be held in the mapping RAM, adding versatility in image processing applications.

TECHNICAL SPECIFICATIONS

Input Impedance:
75 Ohms

Input Signal:
RS 170A composite NTSC color video or
RS 330 black and white video

Processor Output Control Ports:
Input Gain Level
Chroma
Tint
Inverse Map Data
Digitizer Operating Mode and Source Control
Strobes/Line and Delay Setting

Processor Input Control Ports:
Status Data
- Horizontal Timing Flag
- Vertical Blanking Flag
- Vertical Sync Pulse
- Vertical Timing Coarse Count

Digitizer Data (8 bit)

Bus:
Industry Standard S-100

Power Requirements:
+ 18 volts @ .25A
+ 8 volts @ 1.0A
– 18 volts @ .20A

Operating Environment:
0 to + 55 degrees C

*Z-80A is a trademark of Zilog.

ABBREVIATIONS OF COMPANY NAMES

Action Ins	Action Instruments
AD	Analog Devices
ADT	Advanced Digital Technology
Advent	Advent Products, Inc.
Alphatron	Alphatron
AMA	American Automation
AMD	Advanced Micro Devices
AMI	American Microsystems, Inc.
Amperex	Amperex Electronic Corp.
Analogic	Analogic
Analog Sys	Analog Systems
APC	Applied Micro Circuits
Apex	Apex Microtechnology
APM	Applied Microsystems Corp.
Appl Sys	Applied Systems Corp.
APT	Applied Microtechnology
Aptek	Aptek Microsystems
Array Tech	Array Technology
AWI	AWI Electronics
Barvon	Barvon Research
Bedford	Bedford Computer Systems Inc.
Burr-Brown	Burr-Brown
CAE	Computer Aided Engineering
Cal Devices	California Devices
Cermetek	Cermetek
CGRS	CGRS Microtech Inc.
Cherry	Cherry Semiconductor
CIC	Custom Integrated Circuits
CirTech	Circuit Technology
Citel	Citel
Comlinear	Comlinear Corporation
CMA	Custom MOS Arrays
Comark	Comark Corp.
Comdial	Comdial Semiconductor
Comp Auto	Computer Automation
Compas	Compas Microsystems
Cont Logic	Control Logic Inc.
Control Sys	Control Systems Microsystems Div.
CreMicro	Creative Micro Systems
Cromemco	Cromemco, Inc.
Cubit	Cubit Inc.
Curtis	Curtis Electro Devices, Inc.
Cybernetic	Cybernetic Micro Systems
Cybersys	Cybersystems
Cybertek	Cybertek Inc.
Data General	Data General
Data I/O	Data I/O
Data Trans	Data Translation
Datel	Datel
Datricon	Datricon Corporation
DDC	Data Devices Corporation
DEC	Digital Equipment Corporation
Die-Tech	Die-Tech
Digelec	Digelec Corp.
Digitek	Digitek, Inc.
Dionics	Dionics Inc.
Dist Comp	Distributed Computer Systems
Divers Tech	Diversified Technology
E-HI	E-H International, Inc.
EDI	Electronic Designs Inc.
Elind	Elind Elettronica Industriale
EMM-SESCO	EEM-SESCO
Emulogic	Emulogic Inc.
ETI Micro	ETI Micro
Exar	Exar Integrated Systems
Exel	Exel Microelectronics
Fairchild	Fairchild
Ferranti	Ferranti Electric
Force	Force Computers
Fujitsu A	Fujitsu America
Fujitsu	Fujitsu Microelectronics, Inc.
GI	General Instrument
GTE Micro	GTE Microcircuits
Harris	Harris Semiconductor
Heurikon	Heurikon Corp.
Hilevel	Hilevel Technology, Inc.
Hitachi	Hitachi America, Ltd.
Holt	Holt Inc.
HP	Hewlett-Packard
Hughes	Hughes Aircraft, Solid State Products
Hybrid Sys	Hybrid Systems
HyComp	HyComp
ICC	International Cybernetics
IDT	Integrated Device Technology
IMI	International Microcircuits, Inc.
IMP	International Microelectronic Products
IMS	Industrial MicroSystems Inc.
Infosphere	Infosphere
Inmos	Inmos
IntCirEng	Integrated Circuit Engineering
IntCirSys	Integrated Circuit Systems
IntCompSys	Integrated Computer Systems
Int Tech	Integrated Technology Corp.
Intech	Intech Microcircuits Div.
Intel	Intel
Interdesign	Interdesign
Intersil	Intersil
Intronics	Intronics
ITT	ITT Semiconductors
Kinetic Sys	Kinetic Systems
Kontron	Kontron Electronics
Lambda	Lambda Semiconductor
Linear Tech	Linear Technology
LSI Comp	LSI Computer Systems
LSI Logic	LSI Logic Corporation
Master Logic	Master Logic Corporation
Matrix	Matrix Corp.
Matrox	Matrox Electronic Systems
Maxim	Maxim Integrated Products
MCC	Micro-Computer Control
MCE	MCE Electronics
Micrel	Micrel
Micro Innov	Micro Innovators
Micropac	Micropac Industries
Micro Net	Micro Networks
Micro Pwr	Micro Power Systems
Micro Sci	Micro Sciences Corp.
Micro Tech	Microcircuits Technology
Micro-Link	Micro-Link Corporation
Micron	Micron Technology
MilerTron	MilerTronics
Miller	Miller Technology
Mitel	Mitel Semiconductor
Mitsubishi	Mitsubishi Electronics
MMI	Monolithic Memories, Inc.
Mostek	Monolithic Systems Corp.
Motorola	Mostek
MRC	Motorola Semiconductor
Murray	MRC Systems
Monosil	Murray Consulting
National	National Semiconductor
NCM	NCM Corp.
NCR	NCR Corp., Microelectronics Division
NEC	NEC Electronics
Nitron	Nitron
OAE	Oliver Advanced Engineering
Octagon	Octagon Systems Corp.
OEI	Optical Electronics Inc.
Ohio Sci	Ohio Scientic
OKI	OKI Semiconductor
Omnibyte	Omnibyte Corp.
Onset	Onset Computer Corp.
Panasonic	Panasonic
Pico Design	Pico Design
Polycore	Polycore Electronics
Plessey	Plessey Semiconductors
PMI	Precision Monilithics, Inc.
PragDes	Pragmatic Design Inc.
Pro-Log	Pro-Log Corp.
Quay	Quay Corp.
Raytheon	Raytheon Semiconductor
RCA	RCA Solid State Division
RCI Data	RCI Data
RELMS	Relational Memory Systems
Reticon	Reticon
RIFA	RIFA
Rockwell	Rockwell, Microelectronic Devices
RTC	Riehl Time Corporation
Sanyo	Sanyo
SBE	SBE, Inc.
SEEQ	SEEQ Technology, Inc.
SPI	Semi Processes Inc.
Siemens	Siemens
Si-Fab	Si-Fab
Signetics	Signetics
SGS	SGS Semiconductor
Sharp	Sharp
Silicon G	Silicon General
Siliconix	Siliconix
Silicon Sys	Silicon Systems Inc.
Siltronics	Siltronics
SMC	Standard Microsystems Corp.
S MOS	S MOS Systems
Solarise	Solarise Enterprises
Solitron	Solitron Devices
Sprague	Sprague Electric Company
SSM	Solid State Micro Technology for Music
SSS	Solid State Scientific
Stag	Stag Microsystems
STC	Storage Technology Corp.
STD	STD Microsystems
Struc Des	Structured Design Inc.
Stynetic	Stynetic Systems
Sunrise	Sunrise Electronics
Sunshine	Sunshine Semiconductor
Supertex	Supertex Inc.
Symtek	Symtek Corp.
Synertek	Synertek
Sys Innov	Systems Innovations
Tau Zero	Tau Zero Inc.
Technitrol	Technitrol
Tektronix	Tektronix
Teledyne C	Teledyne Crystalonics
Teledyne P	Teledyne Philbrick
Teledyne S	Teledyne Semiconductor
Telefunken	Telefunken
Telmos	Telmos
Teltone	Teltone Corporation
TI	Texas Instruments
Third Domain	Third Domain
Thomson-CSF	Thomson-CSF Components Corp.
Toshiba	Toshiba America
Trans-Data	Trans-Data
TRW	TRW LSI Products
Unitrode	Unitrode
Universal	Universal Semiconductor, Inc.
Varix	Varix Corp.
VLSI Design	VLSI Design Associates
VTI	VLSI Technology, Inc.
Votrax	Votrax
Weitek	Weitek Corporation
Western	Western Digital
Wintek	Wintek Corp.
Xicor	Xicor, Inc.
Xycom	Xycom
Zendex	Zendex Corp.
Zilog	Zilog
ZyMOS	ZyMOS Corporation
Zytrex	Zytrex Corp.

SineTrac™

MICROCOMPUTER A/D-D/A BOARDS

FOR iSBC®-80 MULTIBUS®

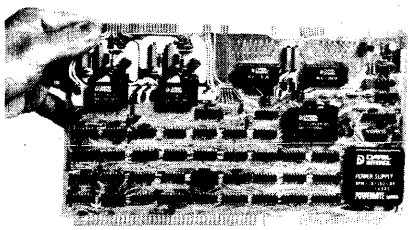

iSBC-711/732 PIN-FOR-PIN

- Operates from Intel RMX-80 Software
- ST-711: 32S/16D A/D, no D/A
- ST-732: Same as ST-711 plus 2 4-20 mA D/A loops
- 12 bits binary, 20 μS A/D conversion
- Crystal Pacer interrupt clock, differential PGA

ST-711
ST-732

FOR LSI®-11, 11/2 AND PDP®-11/23

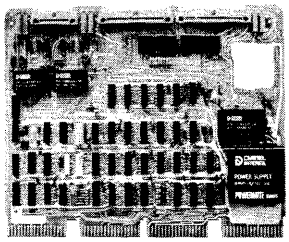

HALF AND FULL QUAD A/D-D/A

- ST-LSI: 32S/16D A/D, 2 D/A loops, Full Quad
- ST-LSI2: 16S/8D A/D, Half Quad
- 12 binary bits, 20 μsec A/D
- Pacer Vector Interrupt Start Clock
- X1 to X1K Differential PGA

ST-LSI
ST-LSI2

(FOR MULTIBUS) HIGH RESOLUTION, 14-BIT DAC'S

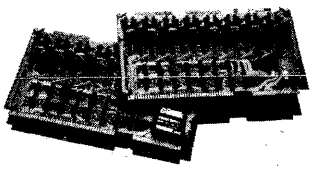

- 4 or 8 D/A channels
- 8/16-bit data transfer, 16/20-bit addressing (8086-series compatible)
- Accuracy .005% of FSR
- Optional DC/DC power converter
- Floppy disk diagnostic program and listing available

ST-716 SERIES

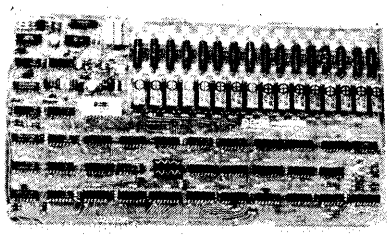

ISOLATED LOW-LEVEL A/D

- 8 or 16 differential A/D channels
- 126 dB CMR, ±250V Isolation
- 10 mV to 2V PGA ranges
- Crystal Pacer Interrupt Start Clock
- Operates from Intel RMX-80 Software

ST-711RLY8D
ST-711RLY16D

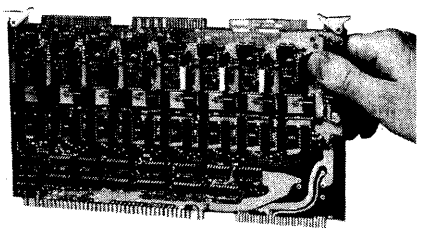

INDUSTRIAL D/A BOARD

- 4 or 8 D/A channels with choice of supplied 4-20 mA loops or voltage output ranges, selectable per channel.
- Directly replaces iSBC-724, 8 or 16 bit bus width, 16 or 20 bit addressing.
- Operates from Intel RMX-80 software.
- Floppy disk Diagnostic and program listing available.
- 12 bit resolution, 0.05% accuracy.

ST-728

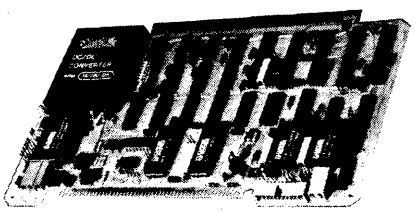

INDUSTRIAL PGA A/D-D/A BOARD

- 32S/16D A/D plus 2 D/A 4-20 mA loops.
- Software-programmed Pacer or event-triggered interrupt/start clock.
- Software-programmed X1 to X8 or X1 to X1024 instrumentation amplifier.
- Includes diagnostic program manual.

ST-6832

Systems Manuals and Diagnostic Programs are included with all models.

DATEL
11 CABOT BOULEVARD, MANSFIELD, MA 02048/TEL (617)339-9341/TWX 710-346-1953/TLX 951340 • Santa Ana, CA (714) 835-2751 • Sunnyvale, CA (408)733-2424 • Los Angeles, CA (213)933-7256 • OVERSEAS: DATEL (UNITED KINGDOM) TEL. BASINGSTOKE (256)69085 • DATEL (FRANCE) TEL. 602 57 11 • DATEL (GERMANY) TEL. (89)530741 • DATEL (JAPAN) TOKYO-TEL. 793-1031

© IC MASTER 1984

VMEmodules

VMEmodules from Motorola incorporate the high performance MC68000, the internationally accepted Eurocard format, the defacto industry standard 16-bit VMEbus, and the new and flexible I/O Channel, all combined in the most versatile and latest state-of-the-art approach to the modular systems concept.

The MC68000 MPU

You've seen the benchmarks, and the results — MC68000 has emerged as the acknowledged microprocessor leader in the 16/32 bit performance class. Its architecture is designed for optimal support of the latest high-level languages, and it directly addresses 16 Megabytes of memory (instead of one Megabyte for most of the competition). Its 32-bit internal features mean easy growth to full 32-bit capability as your needs grow into the future. VMEmodule products put the MC68000 MPU to work in a modular structure that has achieved worldwide acceptance and support, both by users and manufacturers of microcomputer subsystems.

Worldwide Standard Package: Eurocard

Developed as a de facto standard in Europe, the Eurocard mechanical format is rapidly gaining worldwide acceptance of modular applications in a broad range of laboratory and industrial automation environments. And for good reason — the Single and Double Eurocard circuit boards and card cages in the VMEmodule product line offer a convenient size, plus pin-and-socket bus connectors to give you an extra margin of confidence of reliability in the more severe application environments.

Multiprocessing 16/32 Bit VME Bus

The VME bus doesn't lock you into today's technology. It has the inherent power and capabilities to adapt to any number or types of popular processors for true multiprocessing applications; and, you can use as many bus masters as you need.

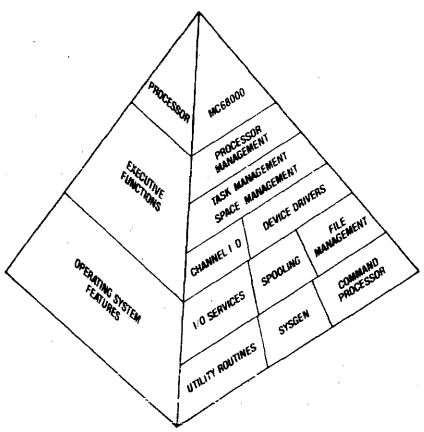

BASIC-M, I/Omodule, RMS68K, VMEbus, VERSAbug, VERSAdos, VERSAmodule and VMEmodule are trademarks of Motorola Inc.

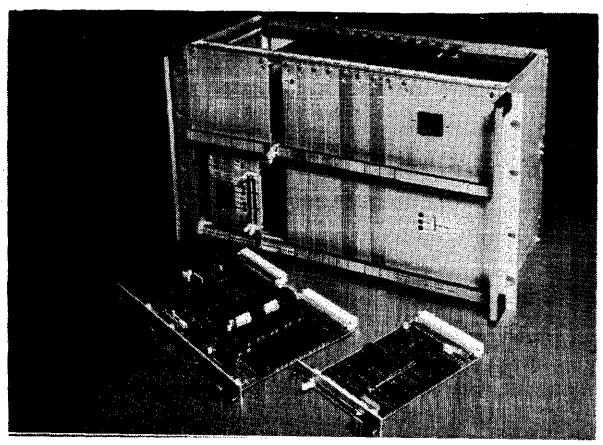

With the VME bus, you can mix 8, 16, and 32-bit processors in the VME backplane. It operates asynchronously at high speed, and provides 7 interrupt plus 4 bus arbitration priority levels to allow total flexibility.

I/O Channel Expands Capabilities

The VMEmodule system architecture supports the I/O Channel feature described elsewhere in this publication. Briefly, the I/O Channel is a buffered extension of the on-board processor bus, allowing the system to be easily custom-tailored with the addition of input/output functions in small modular amounts both within and external to the VME card cage. The I/O Channel promotes efficient system utilization by allowing I/O transfers to proceed at rates up to 2 megabytes per second, independently of other on-going activity in the higher-speed VMEbus system interconnect.

Powered by High Performance Software

VMEmodule products are designed for demanding lab and industrial automation environments where quick, accurate response to multiple random events is essential — and Motorola's RMS68K Real-Time Multitasking Executive software for the VMEmodule Monoboard Microcomputer provides the nucleus around which complete real-time applications can be built. For those applications where large data files and mass storage resources must be handled efficiently, there's the full-featured VERSAdos Operating System. Standard device drivers are provided with both VERSAdos and RMS68K for interfaces and devices supplied by Motorola, and both systems make provisions for easy addition of user-supplied device drivers. Both the RMS68K Executive and the full VERSAdos System are rapidly emerging as the standard real-time system structure for MC68000-based applications.

To provide diversified programming capabilities for VMEmodule-based projects, Motorola supplies not only an advanced Structured Macro Assembler, but also efficient Pascal and FORTRAN Compilers.

© IC MASTER 1984

VMEmodules

And to offer streamlined debugging capabilities, the VMEbug Debug Monitor firmware is available either in ROM or on disk for use with the VMEmodule Monoboard Microcomputer.

Modular Subsystems elevate the starting point for microcomputer system design from the "components" level to the board level. And, just as there are variations in microprocessors for different end-use requirements, there are families of modular subsystems to best serve these varying demands. Thus, the VMEmodule family joins the existing Motorola Micromodule 8-bit family and the VERSAmodule 16-bit family of modular microsystem products to let the user tailor his system to his specific needs.

VMEmodules provide a degree of performance and flexibility that bridges the gap between the lower-level 8-bit processing tasks (the Micromodule domain) and the highend computation and memory-intensive challenges that are the domain of the physically larger and more complex 16/32-bit VERSAmodules. This spectrum of microsystem products offers the most cost effective solution to complex systems — perhaps distributed control systems — with the right performance elements at each processing node of the system.

The Intangible Extras —

When you select Motorola microsystem products for your system design, you get not just the hardware and software, but a host of built-in benefits of almost equal importance. Among these:

- A field-proven line of thoroughly tested products that assure highly reliable system operation.
- A time-tested set of support tools and documentation that simplify system design and operation.
- A nationwide field-sales and service network that offers design and applications support before, during and after the sale.

A mature training program at various levels that offers group training at specified locations as well as in the customer's own establishment.

A product line that continues to expand to take full advantage of new developments for increasing capabilities, improving performance and allowing more efficient operation.

Multiple Sources of VME Compatible Products — Worldwide

Development of the VME bus structure represents the combined technical efforts of Motorola and a number of other major international electronics companies. The initial announcement in Europe met with very positive reactions from potential users and vendors the world over, with the result that the original participants are being joined by increasig numbers of companies planning to supply such products. These sources are united through the activities of the VME Bus Manufacturers Group, which meets four times a year in technical forum to help assure the user community of a high degree of technical compatibility between products, and to make available to the public a comprehensive list of suppliers.

TYPICAL VMEmodule APPLICATION

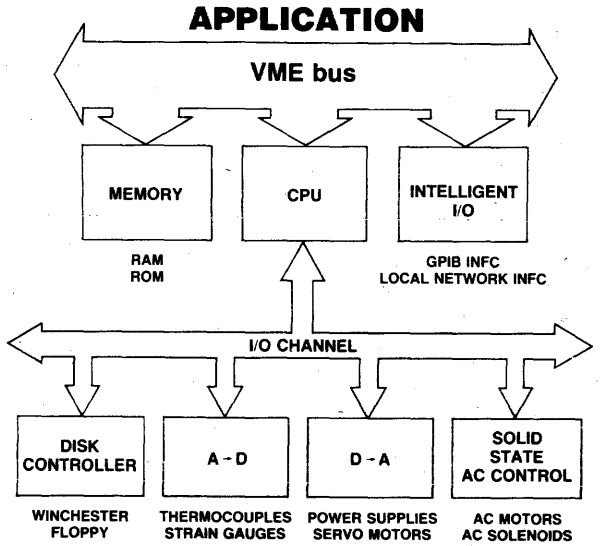

VMEmodule Line*

VMEmodules — VMEbus compatible, Double Eurocard Format.

MVME101 — MC68000 Monoboard Microcomputer with two serial ports and one parallel port on board.

MVME110 — MC68000 Monoboard Microcomputer with I/O Channel support for extended I/O functions.

MVME200/201 — 64K byte and 256K byte Dynamic RAM Modules with data parity check.

MVME210 — Static RAM/ROM Board providing up to 128K bytes storage capacity.

MVME300 — GPIB Controller meeting full IEEE 488-1978 standard.

MVME310 — Universal Intelligent Peripheral Controller with 35% of board area in wirewrap for customer applications.

MVME315 — Intelligent DMA SASI interface and floppy disk controller.

MVME930 — VMEbus Extender Board

MVME931 — VMEbus Wirewrap Board

*See also the list of I/O modules on another page in this catalog for additional I/O functional elements supporting the VMEmodule line.

Software

MVMEBUG — Debugging Packages for VMEmodule Monoboard Microcomputer with single-line Assembler/Disassembler.

M68KORMS68K — M68000 Real-Time Multitasking Executive provides task scheduling and synchronization for any number of tasks.

M68KOVDOS — OEM VERSAdos Operating System is a real-time multitasking MC68000 based system oriented to hard disk operation.

Packaging

VMEmodule and I/Omodule Card Cages, Chassis, Power Supplies and Backplanes.

VERSAmodules

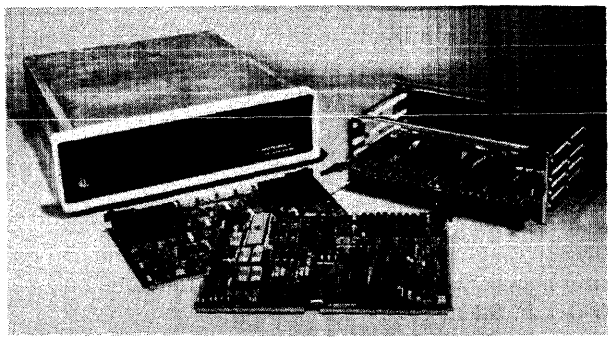

VERSAmodule circuit boards are microcomputer building blocks from Motorola, based on the state-of-the-art 16-bit MC68000 Microprocessor. They are part of a family of modular building block products that provide the system designer ready-to-run hardware and software. VERSAmodule building blocks drastically reduce the total cost of bringing together a fully configured custom microcomputer-based system . . . by saving development time, engineering talent, and money as well.

With VERSAmodule products, you minimize the risks of design limitations and system obsolescence while keeping your system tied to the leading edge of technology. Your system is built around the most advanced 16-bit microcomputer available today . . . incorporating sophisticated architectural features to enhance system performance. The full range of available software products and applications development tools assure early system completion. And Motorola's experienced support staff is available to help, any time.

Use Today's Most Advanced 16-Bit Microcomputers

The VERSAmodule Monoboard Microcomputers (VM01A and VM02) are the most powerful and versatile 16-bit single-board microcomputers available. They achieve a higher degree of computing power, memory capacity and tailorability by combining the MC68000 MPU with other on-board features. Such on-board features as I/O Channel interface, VERSAbus interface, bus arbitration logic, dual port RAM, multiprotocol serial I/O, parallel I/O, programmable timer/counters, and RAM with battery back-up capability enable these VERSAmodule Monoboards to handle applications ranging from those using a single processor through those requiring complex multiprocessing structures.

VERSAbus Architecture Enhances System Performance

VERSAmodule boards are interconnected in a system using the VERSAbus interconnect standard. The high-speed VERSAbus interconnect is characterized by asynchronous operation supporting direct memory addressing and true multiprocessor operation. Unlike other popular bus structures, VERSAbus architecture does not limit the number or types of processors that can be used in multiprocessing applications. The number of "bus masters" or main processor boards is limited only by the number of card slots in the particular VERSAbus backplane being used. Furthermore, several lines within the VERSAbus structure enhance system reliability and integrity by providing for efficient self-diagnosis . . . resulting in minimum system downtime.

BASIC-M, I/Omodule, RMS68K, EXORmacs, EXORbus, VERSAmodule, VERSAbus, VERSAdos, and VERSAbug are trademarks of Motorola, Inc.

Cost-Effective I/O Channel Increases System Flexibility

The I/O Channel is an advanced architectural feature of VERSAmodule Systems that allows greater system flexibility and low incremental cost for I/O expansion. The I/O Channel has a 12-bit address bus, 8-bit bidirectional data bus, 4K Bytes of memory-mapped I/O, and a data transfer rate of up to 2 Megabytes per second.

VERSAdos Real-Time Disk Operating System

The VERSAdos Operating System Software employs modular design of its major programs to allow easy addition of user functions with minimal cost. It contains a file management package and additional device-independent I/O support. The VERSAdos System is available with software drivers for both floppy and hard disk storage, and incorporates redundant safeguards against system failures. Optimum processor and memory utilization are achieved through true multitasking and dynamic memory allocation/deallocation.

RMS68K Real-Time Multitasking Executive

For real-time applications that do not require auxiliary mass storage (disk), and efficient Real-Time Executive may provide all the required systems functions.

The RMS68K Real-Time Multitasking Executive provides the nucleus around which real-time applications can be built. It allows a wide variety of application systems without large expenditures for complex real-time and multitask control functions. RMS68K is ROMable, meaning that the executable code for your entire system could be placed in ROM. In addition, the RMS68K System customizes your system by allowing you to add your own device drivers and select only those functions that you need. Compatibility with VERSAdos and debug software packages helps reduce the cost of software maintenance over the life of your system.

VERSAbug Debugging Packages

The VERSAbug debug package provides a powerful evaluation and debugging tool for VERSAmodule Systems. It permits full-speed execution of system and user-developed programs operated in a VERSAmodule Monoboard Microcomputer environment under complete operator control.

VERSAbug software is available as a system debug monitor, in a pre-configured EPROM resident package, or as source and relocatable object modules, packaged on diskette or cartridge disk, allowing you to easily create your own application-specific version in a matter of hours. In either package, VERSAbug software gives you a powerful tool for reducing system development and continuing maintenance costs.

© IC MASTER 1984

VERSAmodules

Complete Your System . . . On Schedule

With VERSAmodule products, the lion's share of your system's hardware design, debug, assembly and test is done for you. The mature operating system software is already developed and debugged, too. You can begin developing your applications software immediately, in order to respond faster to customer requirements, penetrate fast moving market windows, or automate a critical activity sooner. The result . . . higher profitability.

Use Your Resources Efficiently

Since your costly and often limited technical resources are not needed to design or debug the basic computer system hardware, you can concentrate on the value-added areas of applications software and any unique hardware requirements. In other words, you apply your scarce resources to the area you know best . . . your application.

Lower Your Non-Recurring Costs

The rising costs to design, develop and debug basic system hardware are reduced by using VERSAmodule products. But the cost savings don't stop here. The powerful applications development tools supporting the VERSAmodule family greatly facilitate the development and debugging of your applications software and any specialized hardware. This allows you to get it right the first time . . . avoiding costly redesigns and project delays.

VERSAmodule CIRCUIT BOARDS

Monoboard Microcomputers

VM01A Monoboard Microcomputer — MC68000 MPU, 32/64K Byte RAM, Sockets for 64K Byte ROM, four parallel I/O ports, two serial I/O ports.

VM02 Monoboard Microcomputer — MC68000 MPU, 128K Byte dual-port RAM, Sockets for 64K Byte ROM, two Multiprotocol serial I/O ports. I/O Channel Interface.

VM03 Monoboard Microcomputer — MC68010 MPU at 10 MHz, MC68451 MMU, 256K DRAM, Sockets for 64K Byte ROM, two Multiprotocol serial I/O ports and I/O Channel Interface.

Memory Modules

VM10 Random Access Memory — 128K Byte Dynamic RAM, Byte Parity, 16-bit data/word length.

VM11 Random Access Memory — 256/512K Dynamic RAM, Error detection and correction, 16/32-bit data word length.

VM80 Combination ROM/RAM/I-O — 0/128K Byte Dynamic RAM, Sockets for 256K Byte ROM, six parallel I/O ports, two Multiprotocol serial I/O ports.

Controllers

VM20 Floppy Disk Controller — Up to 4 floppy disks, 2M Byte formatted floppy capacity, On-board IPC with data buffer.

VM60 Universal Intelligent Peripheral Controller — 4K Bytes on-board RAM, Up to 32K Bytes ROM, DMA data transfers, Wire wrap area for custom user interface.

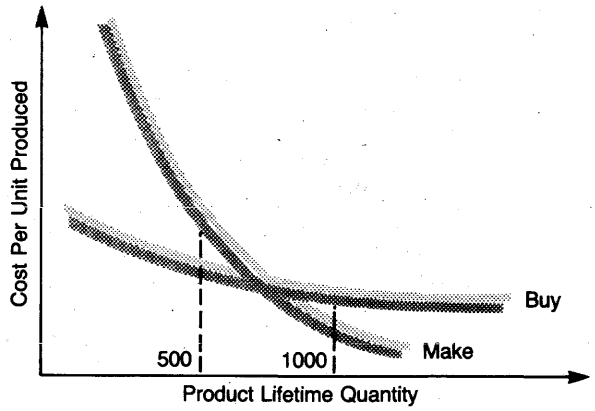

VM21 Universal Disk Controller — UP to 4 floppy disks, Up to 2 SMD compatible hard disks, Up to 516 M Byte formatted disk capacity, On-board IPC with data buffer.

VM30 Multi-Channel Communications Module — four RS-232C serial I/O ports, One parallel printer port, ON-board IPC with data buffer.

Support

RSC1 Remote Serial Conversion Module — RS-232C to RS-449 or multidrop port, Synchronous or asynchronous operation, Half or full duplex, Eurocard form factor.

System Packaging and Accessories — 5¼ inch Chassis, Stand-Alone Card Cage, Power Supplies, Cabling Options, I/Omodule Card Cage, Mass Storage Enclosure, Industrial Card Cage System Package, VERSAbus Adapter Module.

Addition I/O

All of the I/Omodules described under I/Omodules in this catalog are compatible with the I/O Channel on VERSAmodule 02, thus extending many additional I/O and control functions to the VERSAmodule product family.

FUTURE VERSAmodule PRODUCTS

Motorola currently offers more than 20 individual hardware and software products in the VERSAmodule and I/Omodule product lines. But beyond these, Motorola engineers are at work planning and designing future products to ensure continual expansion of the VERSAmodule product line. New hardware and software products will incorporate the latest technology in easy-to-use building-block form. Future family members will include higher-performance single board computers, higher-density memory modules, and new intelligent device controllers . . . all of which take advantage of advancements in LSI technology. I/Omodule products will expand the offering of popular industry interfaces and new software will bring advanced tools like applications-oriented languages and multiprocessor capability for the VERSAdos Operating System. Other announcements from Motorola, plus those from independent vendors offering VERSAbus-compatible products, will assure an even broader selection of useful products in the future.

I/Omodules

The I/O Channel is a new system architectural concept supported in Motorola Microsystem products which allows modular I/O expansion on the local processor bus.

This frees the system bus to handle simultaneous high-speed data exchange and multiprocessor access requirements while permitting most lower speed system I/O activity to take place through the local I/O Channel. Thus, the advanced I/O Channel architecture affords great flexibility in I/O intensive applications such as high speed data acquisition and distributed control.

More than a dozen defined I/Omodule products already support the Motorola modular product line. The family will grow into the future with additional offerings from Motorola, and with a variety of I/O Channel compatible products from other vendors. Should you desire to design custom I/O Channel modules for your specific needs, that task is made easier by a comprehensive I/O Channel Specification Manual available from Motorola. (M68RIO1/D1)

The I/O Channel provides the following features:

- 12-bit address bus
- 8-bit bidirectional data bus
- Asynchronous operation
- Up to 2 megabyte transfer rate
- Four interrupt lines
- Reset line
- 4 MHz free running clock line

The figure below illustrates how a system might be configured using a ribbon cable bus I/O Channel. The bus master is

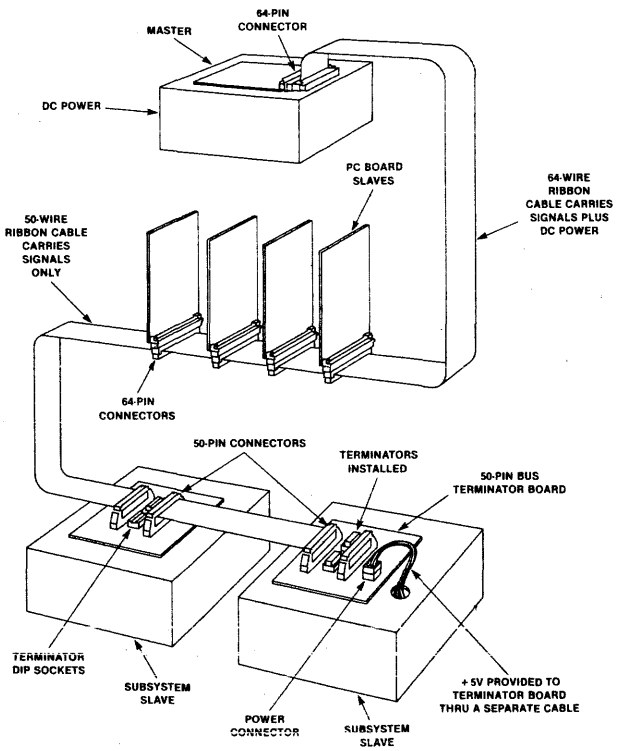

typically a computer, but may also include a DMA controller for transferring blocks of data to or from a slave device at high speed.

I/Omodule Product Line

A. I/Omodules — I/O Channel Compatible, Single Eurocard Format.

MVME400 — Dual Channel RS-232C Serial Port providing two independent, full-duplex serial input/output ports.

MVME410 — Dual Channel 16-bit Parallel Port, four independent 8-bit ports jumper or software configurable as inputs or outputs.

MVME420 — SASI™ Peripheral Adapter provides interface to SA1400 Shugart Associates SASI Bus.

MVME435 — Buffered 9-Track Magnetic Tape Adapter to interface industry standard 800/1600 BPI, ½" Magnetic Tape Formatter.

MVME600 — Analog Input Module with 16 channel single-ended or 8 channel differential operation.

MVME605 — Analog Output Module with 4 independent channels and 12-bit resolution.

MVME610/615/616 — Opto Isolated 120V/240V AC Input/Output modules with eight independent I/O Channels.

MVME620/625 — Opto Isolated 3VDC Input/Output modules with eight channels and isolation to 2500 Volts.

MVME932 — I/O Channel Extender Board.

MVME933 — I/O Channel Wirewrap Board.

MVME935 — I/O Channel Extender Board which converts DIN connector to 50-pin dual row header.

B. I/Omodules — I/O Channel Compatible, Non-Eurocard Format.

M68RWIN1-1, M68RWIN1-2 — Winchester Disk Controller for 5½" or 8" Winchester and Floppy Disk drive combinations.

M68RI01 — Remote Input/Output Module provides parallel I/O oprations and will accept up to 16 compatible solid state relay input and output modules.

M68RAD1 — Remote Intelligent Analog-to-Digital Conversion Module controlled by an on-board Intelligent Peripheral Controller.

© IC MASTER 1984

Micromodules

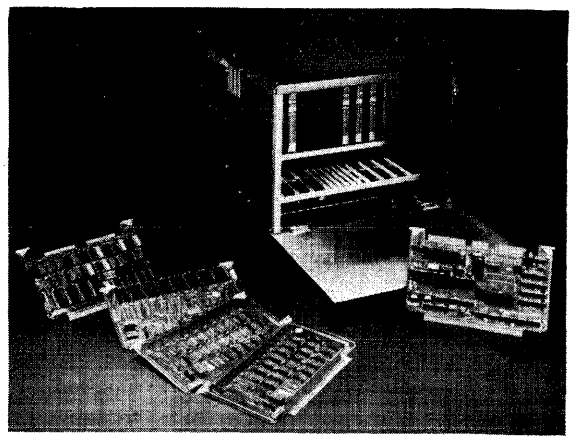

The Motorola line of Micromodules offers a selection of modular subsystems that permits a high degree of end-product customization. It is supplemented by a sophisticated library of development software with high-level language interface to simplify man-machine interaction. An array of packaging accessories provides the proper physical environment for the system assembly.

Utilizing Motorola's extensive family of 8-bit MPU-compatible chips, Micromodules are tailored to meet the performance objectives of most industrial automation and data acquisition applications. They are priced to compete favorably with in-house development and manufacturing costs and, in many instances, they represent the most cost-effective means for rapid, reliable system implementation (or even for prototyping chip-implemented systems.)

The Modular Building Blocks

The Micromodule Family is based on a selection of differently configured *single-board microcomputers.* These vary in capabilities and applications as a result of differences in on-board microprocessors, as well as memory and I/O content. For some requirements, a single monoboard microcomputer module, supplemented by a suitable enclosure, a power supply and your applications program, will adequately serve your total needs. For other more demanding applications, the Family offers a wide range of expansion modules which tailor the system to your ultimate requirements.

Software Support

To ease programming load and allow programmers to concentrate on the end product application, incorporate the **M6809 Real-time Multitasking System (RMS09)** as the executive kernal around which a real-time applications system can be built. RMS09 is a flexible collection of systems routines from which the user can customize or 'sysgen' supervisor routines and interrupt handling routines tailored as simple or as complex as the application system requires.

Also available for MC6809-based systems is SUPERbug, a high performance monitor which also provides the facility for linking relocatable modular software routines that can be independently written and executed from EPROM, ROM or RAM. For MC6800-based Micromodules, there is MICRObug Monitor, with system software and hardware debugging capability. Also available are Editor/Assembler and Basic Interpreter packages.

MONOBOARD MICROCOMPUTER SELECTION GUIDE

Part No.	Parallel I/O	Serial I/O			Memory		Options
		RS-232C	RS-422	20mA	ROM Capacity	RAM (Bytes)	
MC6800/MC6802 Based, 1 MHz Clock Rate							
M68MM01B	1 PIA 1 PTM				To 4K**		Low Cost, Self-contained Not Expandable
M68MM01	3 PIAs				To 4K**	1K	
M68MM01A2	2 PIAs	1 ACIA		*	To 8K**	1K	
M68MM01B1A	1 PIA 1 PTM	1 ACIA		*	To 4K**	384	Cassette I/O
M68MM01D	Printer Port 1 PTM	1 ACIA	(Opt) +	*	To 10K**		Use 2K RAMs in ROM Sockets
MC6809-Based; Clock Rate 1 MHz, except M68MM19A1-2MHz							
M68MM17	1 PIA 1 PTM	2 ACIA		*	To 64K**	To 64K**	Use RAMs in ROM Sockets
M68MM19-1 19A1	1 PIA 1 PTM	1 ACIA or SSDA	(Opt) +	*	To 32K**	2K	Replace ACIA With SSDA +

NOTES:
+ = Option requires minor board modifications
* = Option requires addition of Micromodule MM11 (RS-232C to 20-mA Current-Loop Adapter)
** = User supplied

D-A Converters—All inputs are TTL compatible.

Part No.	No. of Channels	Input	Analog Output Range		Comments
			Voltage	Current	
M68MM05C	4	12-Bit Binary	0-5, 0-10 ± 2.5, ± 5 ± 10		Output Voltage Range option is strap selectable.
M68MM15CV	1 to 4*	12-Bit Binary or two's complement	0-5, 0-10, ± 5, ± 10		Input Code and Output Voltage Range Options are strap selectable.
M68MM15CI	1 to 4*	12-Bit Binary or two's complement	0-5, 0-10, ± 5, ± 10	4 to 20mA	Voltage or Current output device with strap selectable current or voltage range options.

*Add suffix 1 through 4 to part number to denote number of channels required.

A-D Converters

Part No.	No. of Channels		Resolution	Input Voltage	Comments
	Diff.	S.E.	No. of Bits	(full scale, dc)	
High Level M68MM15A	8	16	12	0-5 Vdc, 0-10 Vdc, ± 5 Vdc, ± 10 Vdc.	V_{in} is strap selectable
M68MM15A1	16	32	12	same as above	
M68MM05A	8		12	± 10mV to ± 10V	
M68MM05B		16	12	same as above	
Low Level M68MM15B	1		15 plus sign	± 25 mV, ± 55 mV, ± 80 mV	Expandable to 16 channels with Expander Circuits
M68MM15BEX	1 to 4		Channel Expander for above		

EXORbug, EXORbus, EXORset, MICRObug, Micromodule, RMS09, BASIC-M and SUPERbug are trademarks of Motorola Inc.

© IC MASTER 1984

Micromodules

EXORbus-Compatible Memory Modules

	Capacity (K Bytes)	Features
RAM-Static, NMOS		
M68MM06	2	Clock Speed—1 MHz
MEX6808-22	8	
MEX6816-22S	16	With Parity, Clock speed = 1 or 2 MHz (with stretched Phase 2)
RAM-Static, CMOS		
M68MM09	4	Clock speed = 1.5 or 2 MHz (with stretched phase 2) On-board ckt. for user-installed parity.
M68MM21	8	Optional parity.
M68MM21-1	16	Optional parity.
RAM-Dynamic, with parity		
MEX6816-22D	16	Jumper selectable 1-, 1.5-, or 2- MHz speed; Row-addressable in 16K byte blocks.
MEX6832-22	32	
MEX6848-22	48	
MEX6864-22	64	
RAM-Dynamic; with hidden refresh; clock speed = 1 MHz; all with parity.		
MEX6816-1HR	16	Organized into independently addressable rows of 16K bytes each.
MEX6832-1HR	32	
MEX6848-1HR	48	
MEX6864-1HR	64	

Unpopulated Modules—User supplies chip set

	Number Of Sockets	EPROM/ROM CAPACITY (Memory Chip Number)	OPTION RAM CAPACITY (Memory Chip Number)
MEX68RR	20	16K (MCM68708/6830)	512 (MCM6810)
M68MM04	16	16K (MCM68708/6830)	0
M68MM04A	16	64K (1K, 2K or 4K capacity)	8K (1K or 2K capacity)

Serial-Format Digital I/O

ACIA Modules — MEX6850, 50-2

Offers both TTY and RS-232C data terminal interface, with eight switch-selectable baud rates between 110 and 9600 baud. MEX6850 operates at 1MHz and is configured with Modem output; 6850-2, at 2MHz, is configured with 20 mA TTY output.

Quad Serial I/O — M68MM07

Supplied with four MC6850 ACIAs, or with user supplied MC6852 SSDAs for either asynchronous or synchronous operation. Strap options permit RS-232C, RS-422, RS-423 or 20mA interface and baud-rate selection for each of the four ports.

RS-232C to TTY Adapter — M68MM11

Converts RS-232C output to 20 mA TTY operation.

8 Channel Serial I/O Module — M68MM18

Provides eight asynchronous RS-232C channels. Each channel is strap selectable to baud rates from 75 to 115K BPS. Memory location is strap selectable in a block of eight channels.

GPIB Modules

Provide interface between various MPUs and the IEEE STD 488-1978 interface bus. MM12A provides Listener/Talker functions for sending and receiving data bytes, requesting service and responding to parallel and serial polls. MM12 and 12-1 add the controller function that permits the system to send commands and conduct serial and parallel polls.

Listener/Talker for MC6800-type systems	**M68MM12A**
Listener/Talker/Controller for MC6800-type systems	**M68MM12**
Listener/Talker/Controller for MC6809-type systems	**M68MM12-1**

Memory-I/O-Timer Expansion Module — M68MM16-1, 2, 3

Provides functional expansion of Monoboard MM01 (version 16-1), or MM19 (version 16-2), and can be used as MM19 Emulator in an EXORset Development System (version 16-3). Includes asynchronous serial data port with strap-selectable RS-232C, RS-422, or RS-423 interface, parallel interface port with 16 data lines and 2K of static RAM, four control lines, three 16-bit programmable counter/timers, and four sockets for user installed, single 5-volt-supply MOS or bipolar memories.

Parallel-Format Digital I/O

Universal PIA-Controlled I/O — MEX6820, 21-2

Contains two MC6820 Peripheral Interface Adapters (PIA's) for a total of four separate 8-bit I/O ports for peripheral interfacing.

32-In/32-Out Expansion Module — M68MM03

Contains 32 bits of parallel input and 32 bits of parallel output in four continguous 8-bit bytes. Used for simultaneous transfer of 4 bytes of informtion between an MPU and an external system to speed up the data transfer cycle.

16/32-Channel Relay Output — M68MM13A, B

Contains 16 (MM13A) or 32 (MM13B) on-board reed relay output channels to isolate the microcomputer from the system(s) being controlled.

24-Channel Optically Isolated Input Modules — M68MM13C, D

Provides three byte-oriented (8-bit) input channels that have high electrical isolation between microcomputer and equipment being monitored. Input voltages in excess of 17 volts are read as logical "1"; 4 volts or less represent logical "0." MM13D provides an on-board wetting source for applications requiring switch and relay inputs.

Quad Parallel Interface Adapter — M68MM22

Utilizes four PIAs in a versatile buffered I/O configuration that allows up to 64 high-voltage (200 Vdc or 280 Vac) or high-current (to 3A) signals to be monitored or controlled.

Packaging Hardware

Part No.	Description
M68MMCC05	5-Card Cardcage
M68MMCC10	10-Card Cardcage
M68MMFLC1	Front Load Chassis, 14 Card, 110 Vac
M68MMLC1	Long Chassis, 10 Card, 110 Vac
M68MMSC1	Short Chassis, 5-Card, 110 Vac
M68MMPS-1	Power Supply, 110 Vac

© IC MASTER 1984

National Semiconductor

PRELIMINARY
June 1983

MA2000 Base Plane and Power Supply Module

General Description

The MA2000 module provides a base and power supply subsystem for National Semiconductor's Modular Macrocomponent™ family. The base plane provides power conversion from a low voltage AC or DC input to the regulated +5V, +12V and −12V supplies used by the MA2000 series modules. A reset pushbutton is provided along with a MA2800 LED status indicator. The base plane provides for a battery back-up system as well as power-fail output logic. Zero crossing output logic is also included. The base plane includes a 52-pin socket for the MA2000 series modules and a 60-pin edge connector for user access to the bus and other functions.

Features

- Operates off wide range of AC or DC input power
- Internal or external RAM battery backup system
- Power-fail output logic
- Zero crossing output logic (AC input only)
- System operating status LED indicator
- Manual reset switch
- 60-pin I/O connector for user access to bus and other functions
- 52-pin socket for MA2000 series macrocomponents

Macrocomponent™ is a trademark of National Semiconductor Corp.

Block Diagram

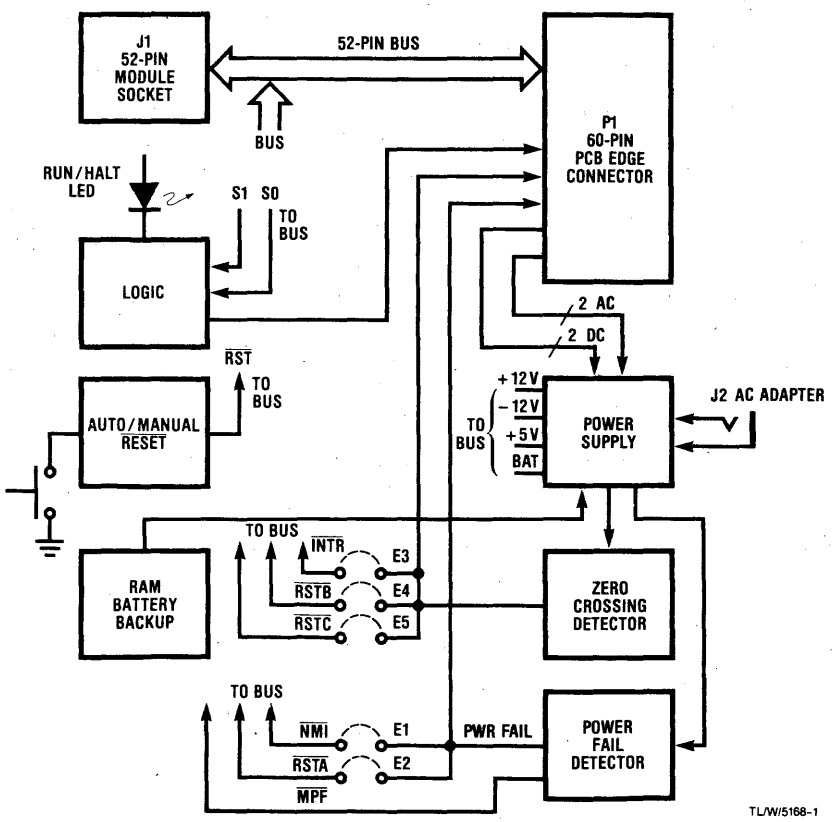

©1983 National Semiconductor TL/W5168

DA-B30M63/Printed in U.S.A.

© IC MASTER 1984

National Semiconductor

PRELIMINARY
June 1982

MA2016 16,384 × 8-Bit CMOS Static RAM Module

General Description

The MA2016 consists of eight 2k × 8-bit CMOS RAMs along with an address decoder capable of decoding up to a 128k × 8-bit low power CMOS RAM. It operates on a single 5V power supply and is able to retain data down to 2V. The MA2016 does not require a refresh and all inputs and outputs are TTL compatible. Multiple MA2016 modules may be stacked in a piggyback fashion or laid out in any manner desired. The low power requirements and versatile layout make the MA2016 very useful for low power hand-held battery powered applications.

Applications

- Portable terminals
- Hand-held devices
- Pos terminals
- Remote instrumentation
- Process controllers
- Microcomputer memory

Features

- 16k × 8-bits fully decoded
- Outputs directly TTL compatible
- Low power—typical 400 mW
- 250 ns access time
- Static operation—no clocks or refreshing required
- Single 5V supply ± 10%
- 2V minimum for data retention
- TRI-STATE® outputs for bus operation
- Common data I/O pins
- Separate OE pin
- Internal power supply decoupling

Ordering Information

MA2016

Connection Diagram

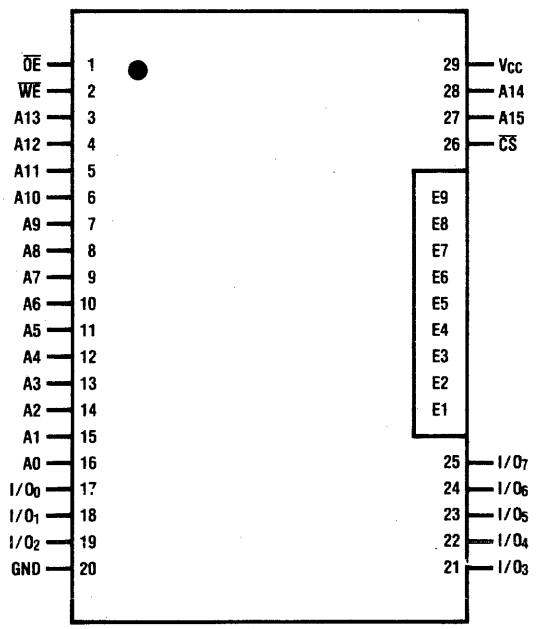

TOP VIEW

Logic Symbol

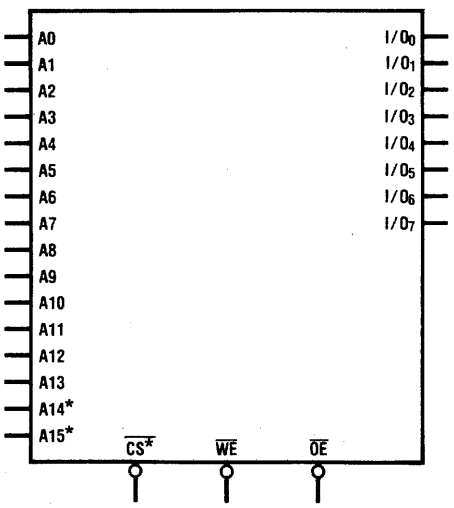

* active state user selectable

Pin Names

$\overline{CS}$	Chip Select Input (user programmable)
$\overline{OE}$	Output Enable Input
$\overline{WE}$	Write Enable Input
I/O_0–I/O_7	Data inputs/Outputs
A0–A15	Address Inputs (A14, A15 Block Select, user programmable)
V_{CC}	Power (typical 5V)
GND	Ground

TRI-STATE® is a registered trademark of National Semiconductor Corp

Truth Table

$\overline{CS}$*	$\overline{WE}$	$\overline{OE}$	I/O	Mode
H	X	X	Hi-Z	Standby
L	H	L	D_{OUT}	Read
L	H	H	Hi-Z	Read
L	L	X	D_{IN}	Write

* $\overline{CS}$ state is user selectable. Table shown with jumper E7 to E8 and E4 to E5 installed.

© 1982 National Semiconductor Corp. JW/1012

IM-B25M62/Printed in U.S.A.

© IC MASTER 1984

September 1983

National Semiconductor

MA2232 Serial Interface Macrocomponent™

General Description

The MA2232 is a complete serial asynchronous communications system packaged in a unique module that measures only 3.3 x 1.6 x 0.45 inches. All active components, with the exception of the RS232 line driver, are CMOS devices. Baud rates between 50 and 19200 are software programmable.

The MA2232 is fully compatible with the MA2000 series Macrocomponent family and, can also be used as a standalone serial communications subsystem in other microprocessor systems.

Macrocomponent™ is a trademark of National Semiconductor Corp.

Features

- Full CMOS with exception of the RS232 driver
- Full or half duplex mode
- Programmable baud rate generator (50 bits/sec to 19200 bits/sec)
- Programmable serial word length: 5 to 8 data bits, parity inhibit, even/odd parity and 1, 1.5 or 2 stop bits
- Parity, framing and overrun error detection
- Low quiescent and operating power
- RS232C circuits: BA (transmitted data), BB (received data), CA (request to send), CB (clear to send) and AB (signal ground)
- Fully compatible with the other building blocks of the MA2XXX Macrocomponent family.
- Usable as a building block in other microprocessor systems

Connection Diagram

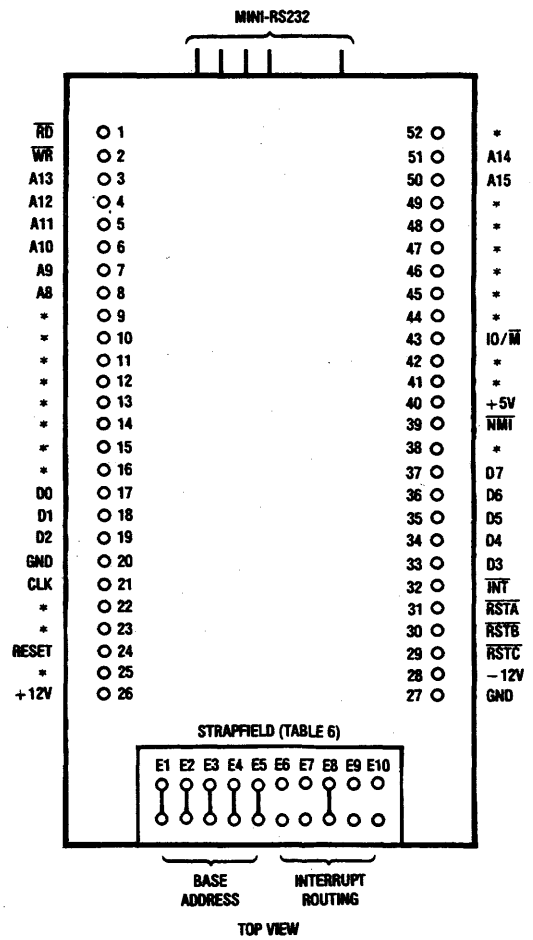

TL/W/5179-1

Note: Pins marked with * are not used by the MA2232.

©1983 National Semiconductor Corporation TL/W/5179

© IC MASTER 1984

National Semiconductor

PRELIMINARY
August 1983

MA2732 8k-Byte CMOS UVPROM/RAM Module

General Description

The MA2732 8k-byte CMOS UVPROM module is a member of the MA2000 series family. It provides a standard modular macrocomponent package and bus interconnect facility for industry-standard 27C16 or 27C32 UVPROMs. The module provides two standard sockets for the packaged parts. The UVPROMs are selected and programmed by the user and then simply inserted into the sockets provided in the MA2732 module. The MA2732 can be configured by the user in PROM capacities of 2k-bytes, 4k-bytes or 8k-bytes at the user's option. The MA2732 is designed such that if the user needs only one of the two sockets for program memory the remaining socket can be populated with a 2k × 8 CMOS RAM to obtain additional data memory. The internal macrobus provides for simple integration of the MA2732 with other members of the MA2000 family. Key features of this module include a complete UVPROM subsystem, self-contained memory map selection logic, opcode, decode and wait-state generator, and output buffered single 5V operation.

Features

- Complete UVPROM subsystem
- Configurable as either 2k, 4k or 8k-bytes of ROM or 2/4k ROM and 2k RAM
- User selectable jumpers for memory mapping
- Internal user selectable wait-state generator
- Buffered data outputs
- Low power—when using two NMC27C32 EPROMs for a full 8k-bytes
- Sockets will accept any of the popular 24-pin ROMs/RAMs
- When the module is not selected it is automatically placed in standby mode (10 mW max using two NMC27C32s)
- Single 5V operation
- Unique stackable module

Applications

- Portable terminals
- Hand-held devices
- Pos terminals
- Remote instrumentation
- Process controllers
- Microcomputer memory

Connection Diagram

Dual-In-Line Package

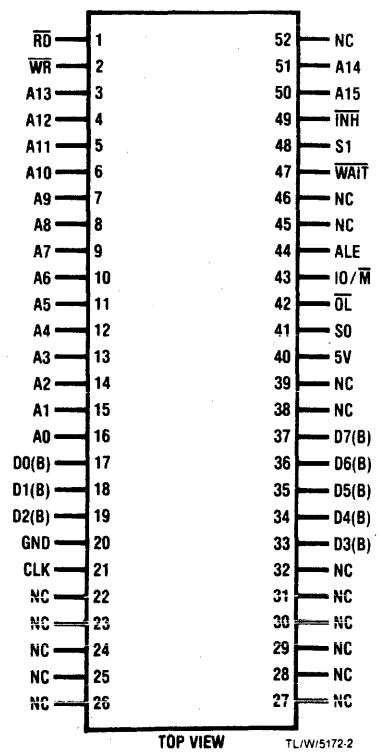

NC = no connection

Pin Names

$\overline{RD}$	Read strobe input
A0–A15	Address inputs
D0–D7	Data outputs (buffered)
CLK	Clock input
S0–S1	Status inputs
$\overline{OL}$	Overlay input
IO/$\overline{M}$	Input/output memory input
ALE	Address latch enable input
$\overline{INH}$	Inhibit input
5V	Power supply input
GND	Digital GND
$\overline{WR}$	Write strobe input

© 1983 National Semiconductor Corp. TL/W/5172

IM-B30M83/Printed in U.S.A.

© IC MASTER 1984

National Semiconductor

PRELIMINARY
October 1983

MA2800 8-Bit CMOS Microcomputer Module

General Description

The MA2800 is a low power, 8-bit CMOS microcomputer system. It provides a CPU, ROM, RAM, parallel and serial I/O ports, a system clock, programmable timers, priority interrupt logic, a software monitor program and 5 MHz operation—on a single 1.6 by 3.3 by 0.45 inch, 52-pin module.

The CPU module utilizes an NSC800™, which provides basic CPU functions, vectored priority interrupt, power-save feature, interrupt acknowledge and Z80 software compatibility.

The 4k ROM in the CPU module contains the resident monitor program which aids in developing software and manipulating I/O devices and memory bytes.

The CPU module also contains 2k of RAM. The resident monitor program uses the top 256 bytes for a scratchpad; the remaining space is user available.

An NSC810 in the CPU module provides the I/O ports and timer. The CPU module utilizes its three ports for basic I/O operation: 8 bits of port A; 6 bits of port B; and 6 bits of port C. Port A can operate in a strobed mode by using 3 bits of port C for handshaking. Two bits of port B can be controlled by the monitor program for serial interfacing. The CPU module also utilizes its two programmable 16-bit timers, capable of DC to 4 MHz operation.

The CPU module controls two memory maps, internal—16k, and external—64k. The internal memory maps consist of the 4k monitor program in ROM, the 2k scratchpad RAM and a user supplied 8k block for programs. The external memory map is user supplied. When selected, the external memory map shadows the internal memory map. The internal memory map defaults to the external memory map at addresses above the 16k block; thus, the top 48k of memory space can be considered common memory.

Features

- General
  - Single 5V power supply
  - On-board monitor program
  - Addresses 64k bytes of memory
  - Addresses 256 I/O spaces
  - Unique save-power feature
  - Standard MA2XXX bus structure
  - Multiplexed and non-multiplexed bus interface capability
  - On-board controller and 2.5 MHz clock generator
  - Speed: 1.6 μs instruction cycle
  - Small size: 1.6 by 3.3 by 0.45 inches
- CPU
  - Fully compatible with Z80 instruction set
  - Powerful set of 158 instructions
  - 10 addressing modes
  - 22 internal registers
  - Five prioritized interrupt request lines
- I/O Ports
  - 3 programmable I/O ports
  - Strobed mode operation
  - Serial interface capability
  - Single instruction I/O bit operation
- Timer
  - Two 16-bit programmable counter/timers
  - Timer operation: DC to 4 MHz

Z80* is a registered trademark of Zilog Corp.
Macrocomponent™ and NSC800™ are trademarks of National Semiconductor Corp.
TRI-STATE* is a registered trademark of National Semiconductor Corp.

Connection Diagram

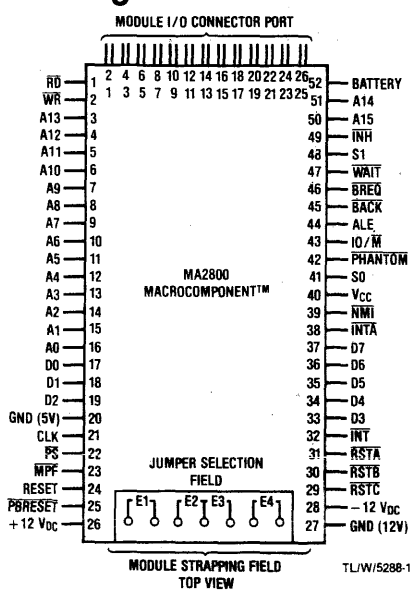

TL/W/5288-1

I/O Pin Descriptions

1. $\overline{RFSH}$	10. PC1	19. PA7
2. CLK	11. OSC IN	20. PA4
3. T0 OUT	12. PB4	21. PA5
4. T0 IN	13. PB5	22. PA2
5. PC4	14. PB2	23. PA3
6. PC5	15. PB3	24. PA0
7. PC2	16. PB0	25. PA1
8. PC3	17. PB1	26. GND
9. PC0	18. PA6	

©1983 National Semiconductor Corp. TL/W/5288

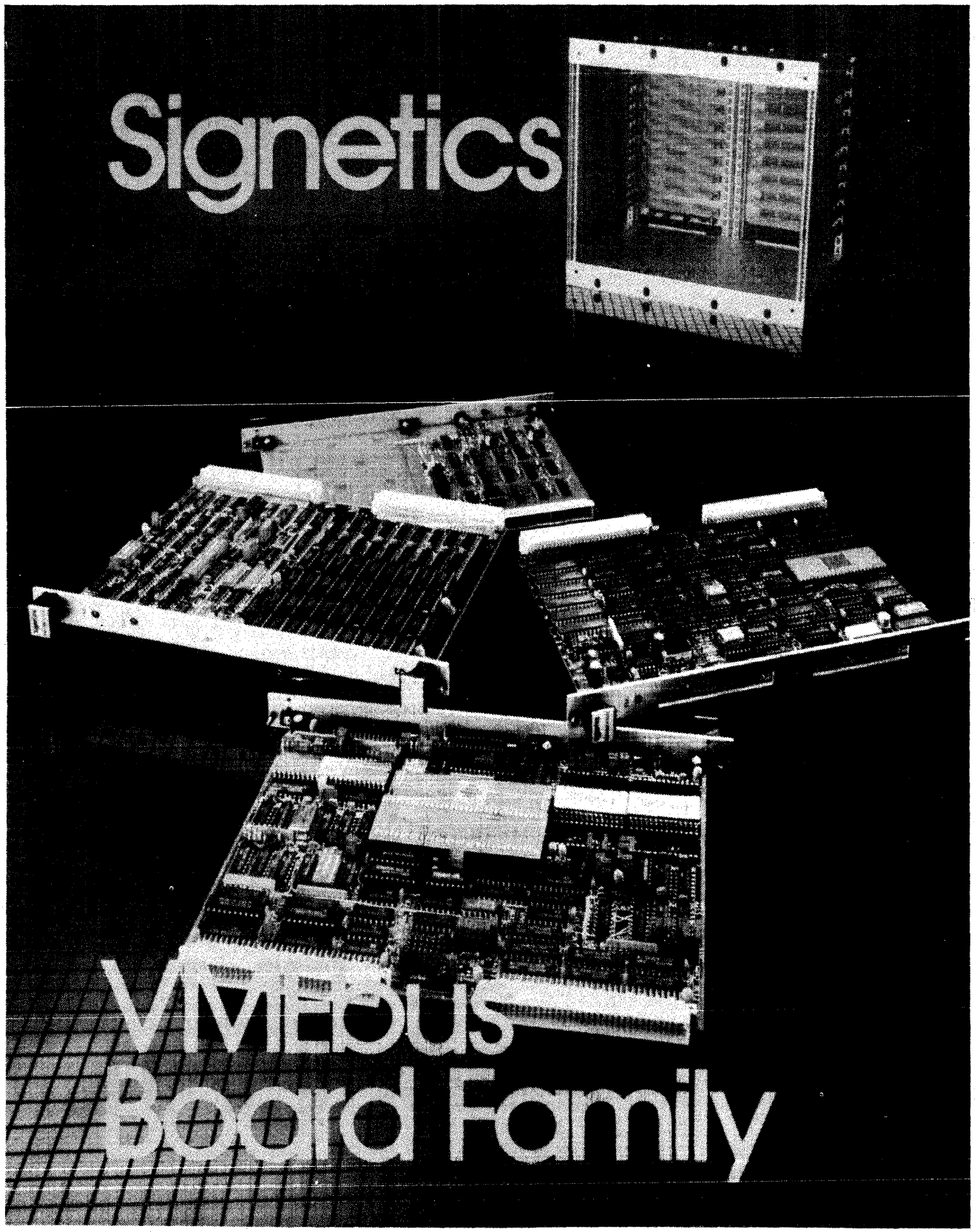

© IC MASTER 1984

SMSFT51970 SIGbug MONITOR

FEATURES

- 27128 EPROM Resident VMEbus System Debug Monitor
- 18 commands for debug
- Single line assembler/ disassembler for ease of program modification
- Full speed execution of system and user developed programs operating in the VMEbus system environment
- Virtual terminal capability for download from a cross development host computer
- Powerful software and system debug command set allows access to all VMEbus I/O, control and memory facilities plus the full 16M byte direct address range of the 68000 processor
- Includes all required installation and operation documentation

SMVME1500 VMEbus SYSTEM CONTROLLER MODULE

FEATURES

- Provides total bus arbitration
  - —Selectable for priority and
  - —Round-Robin modes on all 4 arbitration levels
- Supports orderly system shutdown
  - —Provides early AC power fail notification
- Monitors system operation
  - —Implements selectable watchdog timer and detects improper address conditions
- Provides all system utilities
  - —Generates 16MHz system clock and 4MHz serial bus clock
- VMEbus compatible

SMVME2000 VMEbus CPU MODULE

FEATURES

- 8MHz SCN68000
- Optional memory management SCN68451
- On-board memory
  - —Up to 48Kb ROM-PROM-EPROM/8Kb RAM
- Peripheral I/O Ports
  - —2 RS232 SCN2681/1-Parallel (SCN68230)
- Programmable real-time clock
  - —1-24 bit timer
- Seven levels of interrupt
- VMEbus compatible

SMVME3100 VMEbus 256K MEMORY MODULE

FEATURES

- Large capacity
  - —256K bytes plus parity
- Flexible data widths
  - —Supports 8, 16, and 32 bit transfers
- Protection mechanisms
  - —Selectable for supervisor access only
- Modern architecture
  - —Supports 2-way interleaving
- VMEbus compatible

SMVME4300 VMEbus DISK CONTROLLER MODULE

FEATURES

- Mixed media mass storage control
  - —Supports up to four 5 1/4" and 8"Winchester and floppy disk drives per module
- Bus Master
  - —DMA between main memory and disk drives controlled by an on-board Signetics 8X305 bipolar microprocessor
- Flexible formats
  - —IBM standard or user defined
- error recovery mechanisms
  - —Error correction and detection built-in
- VMEbus compatible

© IC MASTER 1984

If you need
IC Master Catalog
you need
Integrated Circuits
Magazine.

Not only will Integrated Circuits Magazine update your IC Master Catalog...
...it will provide valuable IC application and selection information in every issue.

SUBSCRIBE TODAY!

Subscription card located inside back cover of Volume I or available from publisher upon request.

TEXAS INSTRUMENTS
PROGRAMMABLE PRODUCTS DIVISION · M/S 6432
POST OFFICE BOX 1443 · HOUSTON, TEXAS 77001

TM990 Family of Microcomputer Modules

The TM990 Series provides an extensive choice of preassembled, high-performance, 16-bit microcomputer modules that save design and development time, cut the number of system components, reduce costs, and improve reliability. Each module is a single, pretested, ready-to-plug-in board. The series includes: complete CPU modules with on-board memory and I/O interface; memory and I/O expansion modules; data entry and display modules; software development modules, industrial AC and DC I/O modules; A/D and D/A interface modules; a floppy disk controller; and industrial communication modules. In addition, OEM card cages, cables, connectors, extender, and prototyping boards are available.

All TM990 modules are compatible with other members of TI's 9900 Family of microprocessors and microcomputers, which allows easy conversion to a dedicated-component solution if your application warrants.

Reliability for Harsh Industrial Environments—All components used in TM990 module construction are subjected to TI's strict quality assurance criteria. All assembled modules go through a computer-controlled test station providing verification of product compliance with specifications. All modules are dynamically exercised in a several environment chamber that cycles products through a 25-70°C temperature range; burn-in time varies from eight hours to four days. Prior to shipping, all modules are system tested for strict compliance to system specifications and quality assurance criteria. TM990 modules are guaranteed over the industrial 0°C to 70°C operating temperature range.

Hardware Product Overview

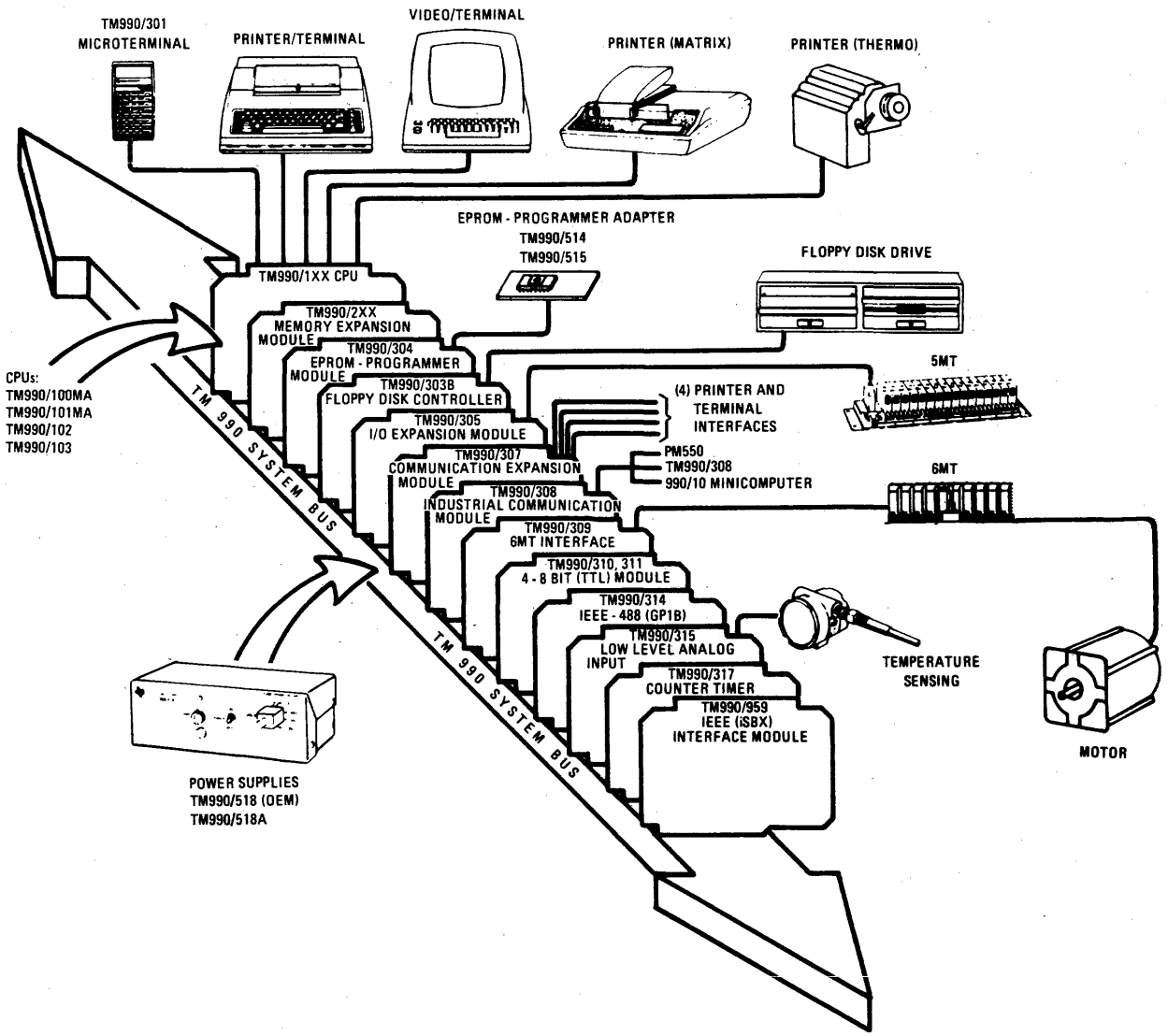

Copyright © 1983 by Texas Instruments Incorporated.

TEXAS INSTRUMENTS
PROGRAMMABLE PRODUCTS DIVISION · M/S 6432
POST OFFICE BOX 1443 · HOUSTON, TEXAS 77001

TM990 Family of Microcomputer Modules

Microcomputer Modules

TI has a wide choice of CPU modules; the TM990/100MA, which has a perforated area on the PC board for customer circuit breadboarding; the TM990/102, which extends the address reach to 1MB providing 128K bytes on-board DRAM, and the TM990/103* high performance CPU, which provides single precision floating point arithmetic, in addition to a 16 MB address reach. All CPUs provide prioritized vectored interrupts.

MODULE	CPU	NO. OF TIMERS	ON BOARD MEMORY (BYTES)			I/O		FLOATING POINT ARITHMETIC
			EPROM	RAM	OFF BOARD	PARALLEL	SERIAL	
TMS990/100MA	TMS9900	2	8K	4K	64K	16	1 RS232	NO
TM990/101MA	TMS9900	3	8K	4K	64K	16	2 RS232	NO
TM990/102	TMS9900	2	16K SOCKETS	128K	1M	0	1 RS232	NO
TM990/103	TMS99110	3	32K SOCKETS	80K SOCKETS	16M	16	2 RS232	YES

*The TM990/103 can accept industry standard IEEE (iSBX)† cost-effective peripheral interface modules.

Memory Modules

MODULE	DESCRIPTION
TM990/201	Combination RAM/EPROM — Up to 8 KB EPROM — Up to 32 KB Static RAM
TM990/202	RAM/EPROM/CMOS/RAM Module Sockets for up to 128 KB EPROM up to 32 KB Static RAM — Up to 32 KB CMOS RAM — On-board battery back up
TM990/203A	Up to 256 KB DRAM with error detection Up to 16 KB EPROM
TM990/204	Battery backed up CMOS RAM Module — 16 KB max — days max data retention.

†Trademark of Intel Coproration

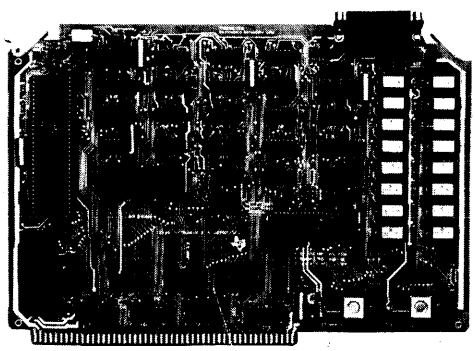

TM990/102

I/O Modules

MODULE	DESCRIPTION
TM990/303B	Floppy disk drive controller
TM990/304	EPROM Programmer Module
TM990/307	Communication Expansion Modules — Provides 4 RS232/RS422
TM990/308	X.25/HDLC Communication Module permits implementation of distributed industrial processing network. Provides an X.25/HDLC communication protocol for packet switching network.
TM990/309	High Power (AC and DC) interface via 6MT industrial I/O modules
TM990/310	48 TTL compatible I/O lines with 3 programmable timers and 6 interrupts.
TM990/311	48 TTL compatible I/O lines interface with 24-mA sink current and on-board voltage regulator for operation with 5MT industrial I/O modules.
TM990/314	IEEE 488 controller
TM990/315	Low-level analog input module supports the thermocouple, RTD, strain gauge, and pressure transducer interface
TM990/317	Pulse timer/event counter module
TM990/959	IEEE page 59 (iSBX) interface module

Copyright © 1983 by Texas Instruments Incorporated.

© IC MASTER 1984

TEXAS INSTRUMENTS
PROGRAMMABLE PRODUCTS DIVISION · M/S 6432
POST OFFICE BOX 1443 · HOUSTON, TEXAS 77001

TM990 Family of Microcomputer Software Products

PDOS

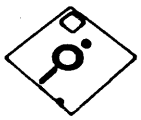

PDOS-01,02

Easy to Use Capture Mechanisms

- Utilities — the popular Basic Language for program development
- Detailed knowlege of specific hardware requirements minimized
- Well documented
- Availability and size

Features:

- Full range of development tools -
  - Screen Editor
  - Basic Language
  - TMS 9900 Assy Language
  - Linker
  - Debugger
  - EPROM Programmer (Supports/302)
- Application Program — ROMable (Burned into EPROM)
- Supports — Floating point arithmetic
- Multi-Tasking (Target)
- Multi-User (Host)
- Support file management
- 75 System Primitives — minimizes programming time (Host)
- Floppy disk based

Development Hardware (User Supplied):

- EIA terminal (screen & keyboard)
- 8" Floppy disk drives (DSDD capability) recommended
- Printer (opt)
- Power Supply (not required with/602 kit)

MPP PASCAL

TMSW754P

Complex/Hi-Performance Applications:

- Supports full concurrency
- User configurable real time executive
- Provides capability for using TI component software

Features:

- Complete PASCAL software development capability
- Syntax checking editor
- Full screen editor
- PASCAL compiler generates p-Codes
- Full PASCAL debugger
- Link editor
- Code generator creates TMS9900 object code
- Run time support resource management at target level, supports extended addressing.
- TMS9900 assembler capabilities
- Applications program — ROMable (EPROM based)
- Multi-user
- Hard disk based — TMAM 9021,9041

SOFTWARE SUMMARY	STORAGE MEDIA		
	HARD DISK	FLOPPY DISK	FIRMWARE 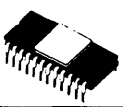
OPERATING SYSTEMS			
• PDOS		PDOS-01,- 02	
LANGUAGES			
• PDOS BASIC • MPP PASCAL • ASSEMBLER PDOS ASSEMBLER LINE-BY-LINE	TMSW754P	PDOS-01,02 TMSW753P-3 PDOS-01, -02	TM990/402
MONITORS			
• TIBUG 100, 101 102 103			TM990/401-3 TM990/404 TM990/405

Copyright © 1983 by Texas Instruments Incorporated.

NEW PRODUCT BULLETIN

Winchester Disk Controller WD1002-SHD

FEATURES

- SINGLE +5V SUPPLY
- SASI™ HOST INTERFACE
- CONTROL FOR UP TO 2 WINCHESTER DRIVES, UP TO 8 R/W HEADS EACH
- 32 BIT ECC FOR WINCHESTER DATA CORRECTION
- DIAGNOSTIC READS AND WRITES FOR CHECKING ERROR CORRECTION
- BAD TRACK MAPPING CAPABILITY
- AUTOMATIC FORMATTING
- 256 OR 512 BYTES PER SECTOR
- SELECTABLE INTERLEAVE
- MULTIPLE SECTOR READS AND WRITES
- BUILT-IN DATA SEPARATOR
- BUILT-IN WRITE PRECOMPENSATION
- OVERLAPPED SEEKS
- IMPLIED SEEKS
- 0°C TO 55°C OPERATIONS

DESCRIPTION

The WD1002-SHD is a stand alone, general purpose Winchester Controller Board designed to interface up to two Winchester Disk Drives to a Host Processor. The Winchester Drive signals are based upon the Floppy look-alike interface available on the Seagate Technology ST506 and other compatible drives. All necessary receivers and drivers are included on the board to allow direct connection to the drive.

Communications to and from the Host Computer are made via a separate computer access port. This port conforms to the popular Shugart Associates System Interface (SASI). It consists of control signals and an 8-bit bi-directional bus. All data to be written to or read from the disk, status information, and command parameters are transferred via this bus. An on-board Data Buffer allows bus transfers to be executed independently of the actual Data Transfer of the drive.

The WD1002-SHD is based upon the WD1010, and WD1100-13, specifically designed for Winchester disk drive control.

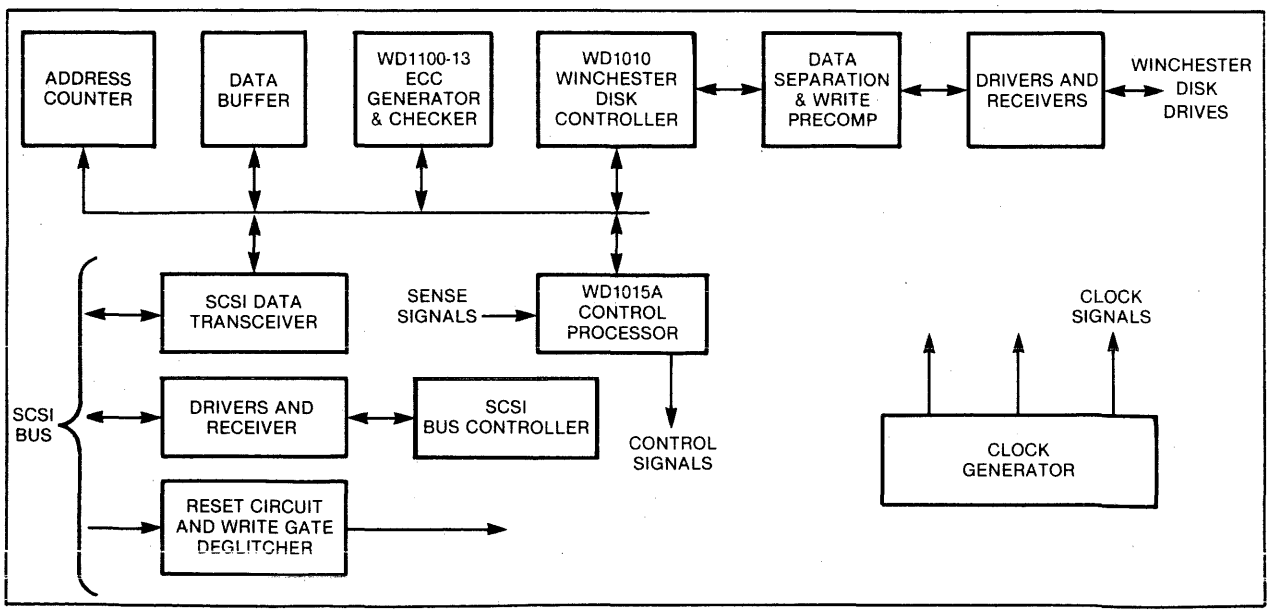

WD1002-SHD BLOCK DIAGRAM

© IC MASTER 1984

PROPOSED APPLICATION

The WD1002-SHD provides a Winchester Drive Controller compatible with SASI bus interface.

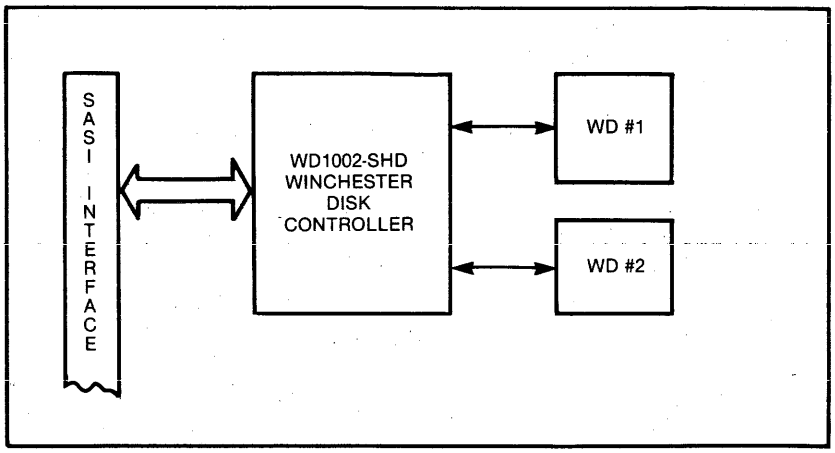

SIMPLIFIED SYSTEM DIAGRAM

© IC MASTER 1984

NEW PRODUCT BULLETIN

MULTIBUS™ Winchester/Floppy Disk Controller WD1002-MTB

FEATURES

- ON-BOARD MICROPROCESSOR CONTROL
- MULTIBUS INTERFACE
- 16 BIT DATA BUS AND 24 BIT ADDRESSING
- DMA CONTROL
- SELF-TEST DIAGNOSTIC CAPABILITY
- INTERFACE COMPATIBLE WITH SEAGATE ST506/SHUGART SA450 TECHNOLOGY
- BUILT-IN DATA SEPARATOR/WRITE PRECOMP LOGIC
- DATA RATES UP TO 5 MBITS/SEC
- CONTROLS UP TO 2 WINCHESTER DRIVES AND 8 READ/WRITE HEADS PER DRIVE
- 1024 CYLINDER/256 SECTOR PER TRACK ADDRESSING RANGE
- CRC GENERATION/VERIFICATION ON ALL ID FIELDS
- DIAGNOSTIC READS AND WRITES FOR CHECKING ECC
- AUTOMATIC FORMATTING
- 128, 256, 512, AND 1024 BYTES PER SECTOR (USER SELECTABLE)
- UNLIMITED SECTOR INTERLEAVE CAPABILITY (INCLUDING INTERLEAVE FACTOR ONE)
- OVERLAP SEEK CAPABILITY
- IMPLIED SEEK ON ALL COMMANDS (ONLY IF DRIVE HAS BUFFERED SEEKS)
- PROGRAMMABLE STEP RATES FROM 7.5 mS TO 35 μS IN 500 μS INCREMENTS
- MULTIPLE SECTOR TRANSFERS (UP TO 65,535 SECTORS)
- AUTOMATIC TRACK/CYLINDER BOUNDARY CROSSING ON MULTI SECTOR TRANSFERS
- PROGRAMMABLE DISK PARAMETERS
- ECC 5 BIT CORRECTION ON ALL SECTORS, MULTIPLE BURST DETECTION TO 8 BITS
- PARALLEL ECC IMPLEMENTATION
- COMPUTER GENERATED ECC POLYNOMIAL
- ECC DISABLING CAPABILITY SUPPORTS READ/WRITE, SHORT/LONG FEATURES
- ERROR REPORTING SUPPORTS DISK AND CONTROLLER ERRORS
- SUPPORTS BAD BLOCK MAPPING
- CONTROLS UP TO FOUR 5.25″ FLOPPY DISK DRIVES
- PROGRAMMABLE DISK PARAMETERS
- SINGLE SIDED, SINGLE DENSITY; DOUBLE SIDED, SINGLE OR DOUBLE DENSITY SUPPORTED
- INTEGRAL PLL DATA SEPARATOR
- SOFT SECTOR FORMAT COMPATIBILITY

DESCRIPTION

The WD1002-MTB is a custom single board disk controller, specifically designed to interface to Multibus. The WD1002-MTB conforms to all conditions set forth in the IEEE 796 Bus Standard. The purpose of the board is to provide disk control for up to two 5.25″ Winchester disk drives and up to four 5.25″ Floppy disk drives. All necessary buffers and driver/receivers are included on the board to allow direct connection to the various drives. Power is derived from a single +5VDC supply.

Communications between the host CPU and the WD1002-MTB, as well as all data transfers, are accomplished through DMA transfers. A uniquely defined system of I/O parameter blocks (IOPB) is utilized to establish command structures. One exception to DMA communication exits; e.g. the initial controller "Wake-Up" when the host CPU must pass the vector address of the IOPB to the WD1002-MTB via a specialized vector-stack port, located on the WD1002-MTB.

© IC MASTER 1984

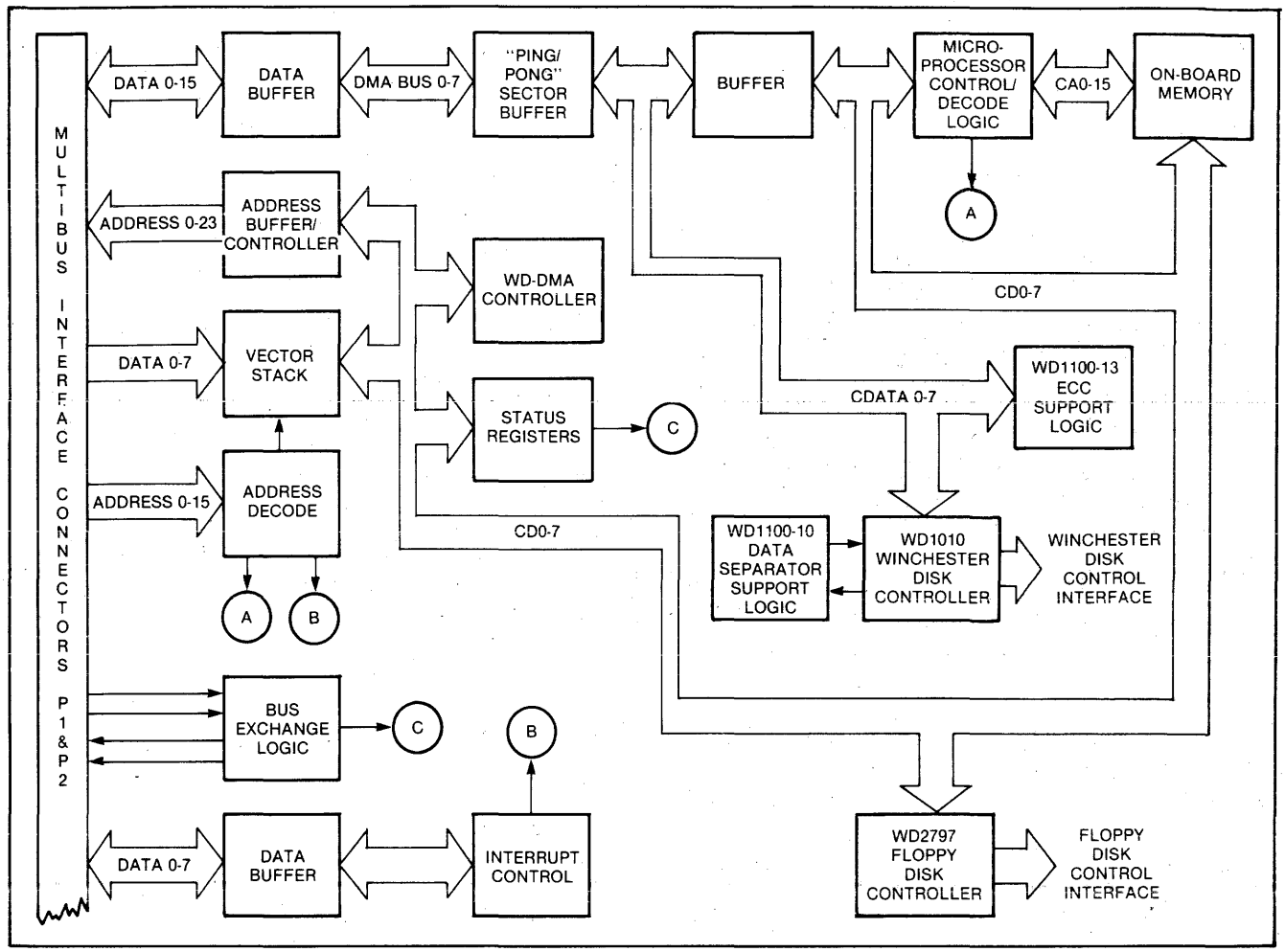

Figure 1. WD1002-MTB SIMPLIFIED BLOCK DIAGRAM

APPLICATIONS

The WD1002-MTB supports a robust repertoire of high-level commands which allow host software to store and retrieve data from disk without dealing with machine-level details of disk drive operation. Furthermore, the MTBC returns status, command completion, and error codes hierarchically arranged from ready/no error, through non-fatal, to fatal errors, as applicable. All non-timing, non-device select communication between the WD1002-MTB and the host software occurs over the data bus, using DMA message transfers.

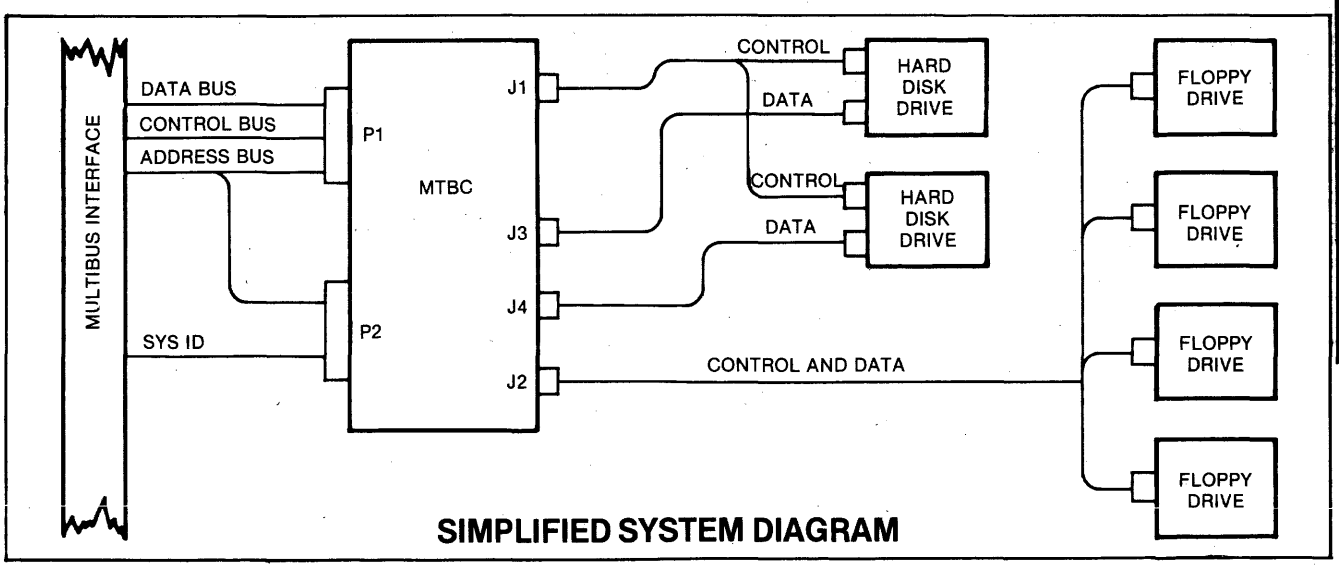

SIMPLIFIED SYSTEM DIAGRAM

WESTERN DIGITAL CORPORATION
2445 McCABE WAY
IRVINE, CALIFORNIA 92714
(714) 863-0102, TWX 910-595-1139

© IC MASTER 1984

WINTEK

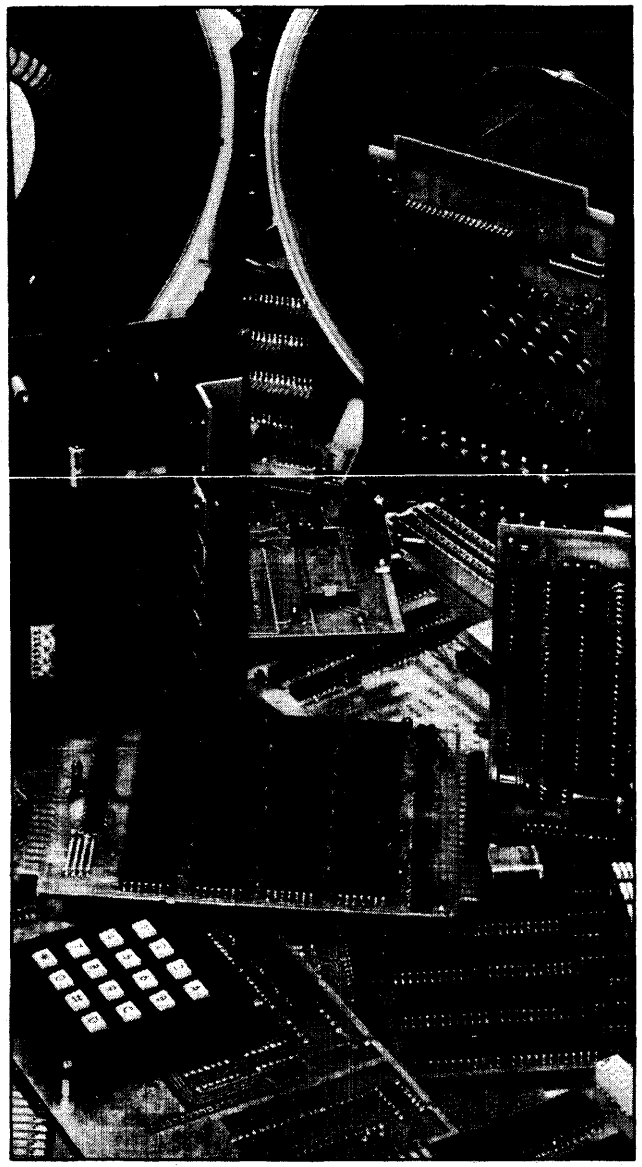

Wintek Corporation — your complete source of hardware and software products for the 6800, 6801, 6805, and 6809 microprocessor families:

- *Micro Modules for R & D efforts and for the OEM*
- *Software Development Systems*
- *Resident and Cross-Software*
- *Custom Hardware and Software*
- *Microprocessor Consulting*
- *Hands-on Microcomputer Short-Courses and Workshops*

Items listed on this page are just a sample of Wintek's wide product line. Request a complete catalog of Wintek products and services.

Micro Modules

All modules are 4.5 by 6.5 inch. Unit prices are listed. Quantity discounts for micro modules are 10-24 10%, 25-49 20%, 50-99 30%, 100-499 40%, 500+ 50%.

MCH18	6809 MPU, 2K RAM, 3 ROM sockets, 2 RS-232 serial ports, 4 parallel ports, watchdog timer, real-time clock	$285
MCH38	6809 MPU, 6K RAM, 1 ROM socket, 2 RS-232 serial ports, 4 parallel ports, watchdog timer, real-time clock	325
MCH68	6809 MPU, 24K RAM, 1 ROM socket, 2 RS-232 serial ports, 4 parallel ports, watchdog timer, real-time clock	885
MCL10	6800 MPU, 128 bytes RAM, 1 ROM socket	101
MCL45	6800 MPU, 0.5K RAM, 1 ROM socket, serial port, 4 parallel ports	182
MAI04	16-channel, 12-bit A/D Converter module	229
MAI20	2-channel, 8-bit D/A Converter module	99
MCI11	16 button keypad with 15 7-seg. displays	199
MCM81	2K bytes CMOS RAM with battery	189
MCS00	Cassette tape & RS-232 interface for 6800 Control Module	109
MCT10	Counter/timer module with battery	129
MDS08	Driver/Sensor module with 8 optically isolated inputs	111
MDS44	Driver/Sensor module with 4 optically isolated inputs and 8 open-collector drivers	107
MDS80	Driver/Sensor module with 16 open-collector drivers	103
MFC04	Floppy disk controller for 4 drives	199
MGP00	IEEE-488 Bus interface	199
MPB00	Breadboard with parallel interface	49
MPI08	64-line parallel I/O	179
MRO16	ROM module for 2708, 16 bytes	89
MRO17	ROM module for 2716, 32K bytes	89
MRO18	ROM module for 2732, 32K bytes	89
MSI08	8-port RS-232 serial interface	249
ABP04	4 slot backplane	66
ABP07	7 slot backplane	114

Development Systems

SDP10	Development Pac 1 — semi-kit with 6800 MPU, 16K RAM, cassette-based editor/assembler	$749
SDP23	Development Pac 2 — semi-kit with 6800 MPU, 48K RAM, cassette-based editor/assembler and BASIC, EPROM programmer	1399
SSP32	Sprint 68 — 6800 MPU with dual 8" disks, 48K RAM, operating system, editor, assembler, BASIC, and Small-C, optional C-compiler, FORTRAN, Pascal, cross-assemblers, EPROM programmer	3949
SVC00	6801 VICE — Development and test system for 6801/68701 MPU with 6K RAM, debugger, virtual in-circuit emulation, and 68701 programmer	695

Sprint 68 Software

Supplied on diskette for Sprint 68 Development System

RDA00	6800 Macro Assembler	$150
RDA01	6801 Macro Cross-Assembler	150
RDA05	6805 Macro Cross-Assembler	150
RDA09	6809 Macro Cross-Assembler	150
RDC00	6800 C-Compiler	495
RDL00	Linker	75
RDU00	UCSD p-System with FORTRAN & Pascal	675

Cross-Software

Written in ANSI FORTRAN for PDP-11, VAX, IBM, CDC, etc. computers. Request license and media forms before ordering.

CAS00	6800/6801 Macro Cross-Assembler	$1000
CAS50	6805 Macro Cross-Assembler	1000
CAS90	6809 Macro Cross-Assembler	1000
CFP00	6800 Floating-Point Package	500
CLL00	Cross-Linker	400
CPL00	6800 PL/W Compiler	1400
CPL90	6809 PL/W Compiler	1400
CSM00	6800 Simulator	800
CSM10	6801 Simulator	800
CCC00	Pkg: CAS00, CFP00, CLL00, CPL00 & CSM00	3400

WINTEK CORPORATION, 1801 SOUTH STREET, LAFAYETTE, IN 47904-2993 PHONE (317) 742-8428

© IC MASTER 1984

Integrated Circuits Magazine
The magazine for the engineering design strategist*

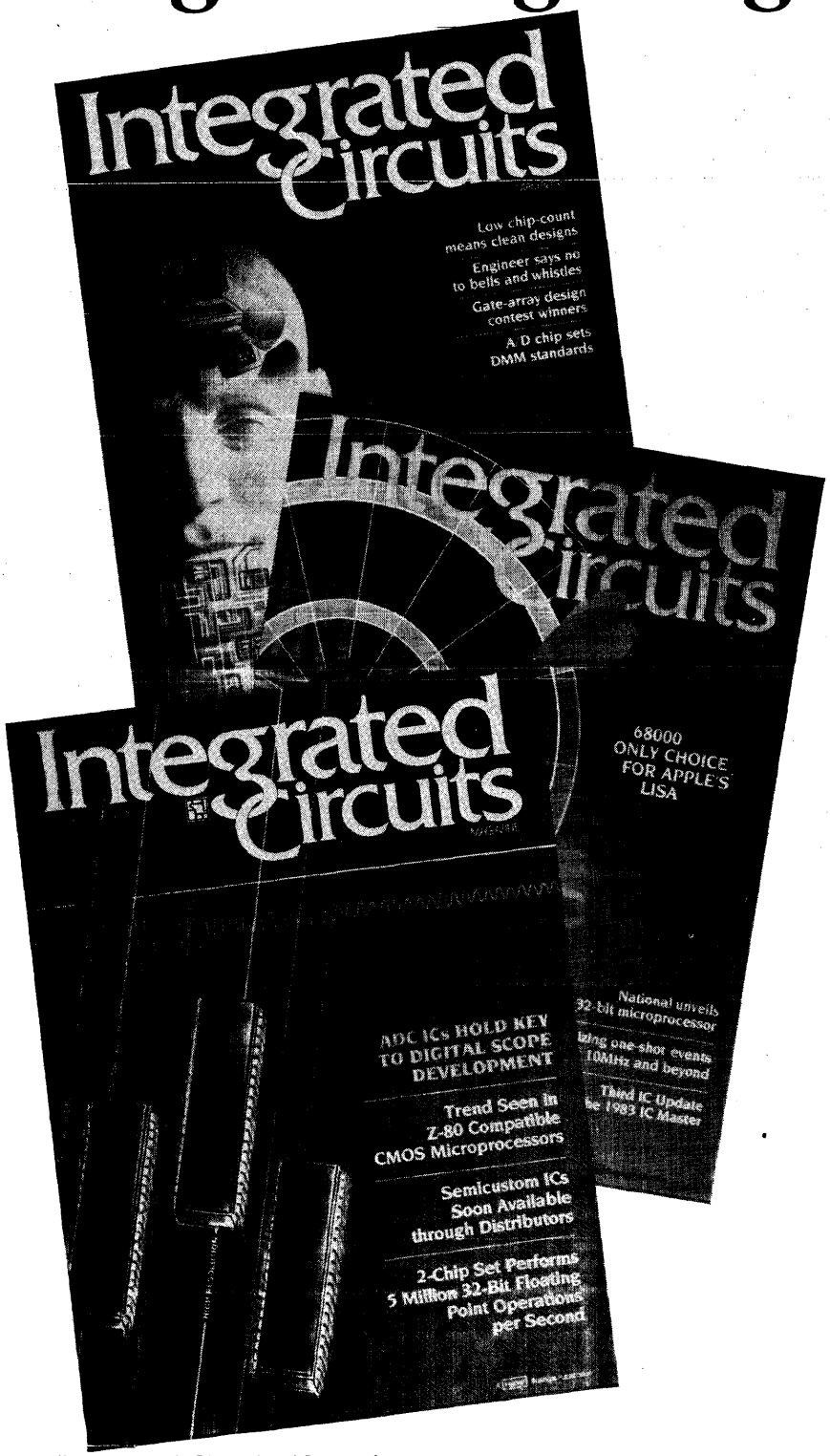

Integrated Circuits Magazine is the only publication written for senior design engineers and engineering managers who specialize in the specifying and use of ICs and related components in the design of instruments, equipment and systems.

It is unique in that it concentrates on reporting *from the viewpoint of the user.*

Each issue of *Integrated Circuits Magazine* includes staff-written interviews with leading designers at major IC customers, as well as articles written by IC users themselves.

Regular features include: IC User Feedback Reports, Semicustom Design Techniques, IC Design Problems and Solutions. What's New in ICs, and much more.

To receive *Integrated Circuits Magazine* absolutely FREE† simply give us your authorization right now! Just fill out, sign, date and return the subscription card located inside the back cover of Volume I.

Card missing? Additional subscription cards available from publisher upon request.

Integrated Circuits Magazine is designed for *YOU.*

******Designers who must keep pace with contemporary engineering design techniques, practices and trends, and how they affect the selection and application of integrated circuits, microcomputers, boards, and systems.*

†Integrated Circuits Magazine is made available on a complimentary basis to those qualified recipients within the United States only.

Canadian and Foreign Subscriptions are available, prepaid by check or money order payable in United States currency, at the following rates: $35.00 per year Canadian/Foreign; $55.00 per year Foreign via Air Mail; $18.00 per year non-qualified Domestic United States.

Integrated Circuits Magazine
Circulation Department
645 Stewart Ave.
Garden City, NY 11530
(516) 222-2500
TWX: 510-222-1673

ABBREVIATIONS OF COMPANY NAMES

Action Ins	Action Instruments
AD	Analog Devices
ADT	Advanced Digital Technology
Advent	Advent Products, Inc.
Alphatron	Alphatron
AMA	American Automation
AMD	Advanced Micro Devices
AMI	American Microsystems, Inc.
Amperex	Amperex Electronic Corp.
Analogic	Analogic
Analog Sys	Analog Systems
APC	Applied Micro Circuits
Apex	Apex Microtechnology
APM	Applied Microsystems Corp.
Appl Sys	Applied Systems Corp.
APT	Applied Microtechnology
Aptek	Aptek Microsystems
Array Tech	Array Technology
AWI	AWI Electronics
Barvon	Barvon Research
Bedford	Bedford Computer Systems Inc.
Burr-Brown	Burr-Brown
CAE	Computer Aided Engineering
Cal Devices	California Devices
Cermetek	Cermetek
CGRS	CGRS Microtech Inc.
Cherry	Cherry Semiconductor
CIC	Custom Integrated Circuits
CirTech	Circuit Technology
Citel	Citel
Comlinear	Comlinear Corporation
CMA	Custom MOS Arrays
Comark	Comark Corp.
Comdial	Comdial Semiconductor
Comp Auto	Computer Automation
Compas	Compas Microsystems
Cont Logic	Control Logic Inc.
Control Sys	Control Systems Microsystems Div.
CreMicro	Creative Micro Systems
Cromemco	Cromemco, Inc.
Cubit	Cubit Inc.
Curtis	Curtis Electro Devices, Inc.
Cybernetic	Cybernetic Micro Systems
Cybersys	Cybersystems
Cybertek	Cybertek Inc.
Data General	Data General
Data I/O	Data I/O
Data Trans	Data Translation
Datel	Datel
Datricon	Datricon Corporation
DDC	Data Devices Corporation
DEC	Digital Equipment Corporation
Die-Tech	Die-Tech
Digelec	Digelec Corp.
Digitek	Digitek, Inc.
Dionics	Dionics Inc.
Dist Comp	Distributed Computer Systems
Divers Tech	Diversified Technology
E-HI	E-H International, Inc.
EDI	Electronic Designs Inc.
Elind	Elind Elettronica Industriale
EMM-SESCO	EEM-SESCO
Emulogic	Emulogic Inc.
ETI Micro	ETI Micro
Exar	Exar Integrated Systems
Exel	Exel Microelectronics
Fairchild	Fairchild
Ferranti	Ferranti Electric
Force	Force Computers
Fujitsu A	Fujitsu America
Fujitsu	Fujitsu Microelectronics, Inc.
GI	General Instrument
GTE Micro	GTE Microcircuits
Harris	Harris Semiconductor
Heurikon	Heurikon Corp.
Hilevel	Hilevel Technology, Inc.
Hitachi	Hitachi America, Ltd.
Holt	Holt Inc.
HP	Hewlett-Packard
Hughes	Hughes Aircraft, Solid State Products
Hybrid Sys	Hybrid Systems
HyComp	HyComp
ICC	International Cybernetics
IDT	Integrated Device Technology
IMI	International Microcircuits, Inc.
IMP	International Microelectronic Products
IMS	Industrial MicroSystems Inc.
Infosphere	Infosphere
Inmos	Inmos
IntCirEng	Integrated Circuit Engineering
IntCirSys	Integrated Circuit Systems
IntCompSys	Integrated Computer Systems
Int Tech	Integrated Technology Corp.
Intech	Intech Microcircuits Div.
Intel	Intel
Interdesign	Interdesign
Intersil	Intersil
Intronics	Intronics
ITT	ITT Semiconductors
Kinetic Sys	Kinetic Systems
Kontron	Kontron Electronics
Lambda	Lambda Semiconductor
Linear Tech	Linear Technology
LSI Comp	LSI Computer Systems
LSI Logic	LSI Logic Corporation
Master Logic	Master Logic Corporation
Matrix	Matrix Corp.
Matrox	Matrox Electronic Systems
Maxim	Maxim Integrated Products
MCC	Micro-Computer Control
MCE	MCE Electronics
Micrel	Micrel
Micro Innov	Micro Innovators
Micropac	Micropac Industries
Micro Net	Micro Networks
Micro Pwr	Micro Power Systems
Micro Sci	Micro Sciences Corp.
Micro Tech	Microcircuits Technology
Micro-Link	Micro-Link Corporation
Micron	Micron Technology
MilerTron	MilerTronics
Miller	Miller Technology
Mitel	Mitel Semiconductor
Mitsubishi	Mitsubishi Electronics
MMI	Monolithic Memories, Inc.
Mostek	Monolithic Systems Corp.
Motorola	Mostek
MRC	Motorola Semiconductor
Murray	MRC Systems
Monosil	Murray Consulting
National	National Semiconductor
NCM	NCM Corp.
NCR	NCR Corp., Microelectronics Division
NEC	NEC Electronics
Nitron	Nitron
OAE	Oliver Advanced Engineering
Octagon	Octagon Systems Corp.
OEI	Optical Electronics Inc.
Ohio Sci	Ohio Scientic
OKI	OKI Semiconductor
Omnibyte	Omnibyte Corp.
Onset	Onset Computer Corp.
Panasonic	Panasonic
Pico Design	Pico Design
Polycore	Polycore Electronics
Plessey	Plessey Semiconductors
PMI	Precision Monilithics, Inc.
PragDes	Pragmatic Design Inc.
Pro-Log	Pro-Log Corp.
Quay	Quay Corp.
Raytheon	Raytheon Semiconductor
RCA	RCA Solid State Division
RCI Data	RCI Data
RELMS	Relational Memory Systems
Reticon	Reticon
RIFA	RIFA
Rockwell	Rockwell, Microelectronic Devices
RTC	Riehl Time Corporation
Sanyo	Sanyo
SBE	SBE, Inc.
SEEQ	SEEQ Technology, Inc.
SPI	Semi Processes Inc.
Siemens	Siemens
Si-Fab	Si-Fab
Signetics	Signetics
SGS	SGS Semiconductor
Sharp	Sharp
Silicon G	Silicon General
Siliconix	Siliconix
Silicon Sys	Silicon Systems Inc.
Siltronics	Siltronics
SMC	Standard Microsystems Corp.
S MOS	S MOS Systems
Solarise	Solarise Enterprises
Solitron	Solitron Devices
Sprague	Sprague Electric Company
SSM	Solid State Micro Technology for Music
SSS	Solid State Scientific
Stag	Stag Microsystems
STC	Storage Technology Corp.
STD	STD Microsystems
Struc Des	Structured Design Inc.
Stynetic	Stynetic Systems
Sunrise	Sunrise Electronics
Sunshine	Sunshine Semiconductor
Supertex	Supertex Inc.
Symtek	Symtek Corp.
Synertek	Synertek
Sys Innov	Systems Innovations
Tau Zero	Tau Zero Inc.
Technitrol	Technitrol
Tektronix	Tektronix
Teledyne C	Teledyne Crystalonics
Teledyne P	Teledyne Philbrick
Teledyne S	Teledyne Semiconductor
Telefunken	Telefunken
Telmos	Telmos
Teltone	Teltone Corporation
TI	Texas Instruments
Third Domain	Third Domain
Thomson-CSF	Thomson-CSF Components Corp.
Toshiba	Toshiba America
Trans-Data	Trans-Data
TRW	TRW LSI Products
Unitrode	Unitrode
Universal	Universal Semiconductor, Inc.
Varix	Varix Corp.
VLSI Design	VLSI Design Associates
VTI	VLSI Technology, Inc.
Votrax	Votrax
Weitek	Weitek Corporation
Western	Western Digital
Wintek	Wintek Corp.
Xicor	Xicor, Inc.
Xycom	Xycom
Zendex	Zendex Corp.
Ziiog	Ziiog
ZyMOS	ZyMOS Corporation
Zytrex	Zytrex Corp.

ADVERTISERS PRODUCT INDEX

This index shows the page and the line on that page of every device for which data is included in the Master Selection Guide. It is organized alphabetically by manufacturer and for each manufacturer, alphanumerically by device. Bold face listings lead to data on important products which have been supplied for you by the manufacturers.

HOW TO USE THE PRODUCT INDEX

The Product Index includes many of the same references as the Part Number Index, but in this case the listings are sorted by manufacturer.

As in the Part Number Index, the model numbers are sorted alphanumerically from **left** to **right**. Here the manufacturer's prefixes are included so that devices without alphabetic prefixes appear before those with them (i.e., 1101 would be before LM1101). Application note pages are indicated by a ¶ sign and manufacturer's product information pages by a ★ sign. The numbers preceding the dash are the page numbers, while those following the dash indicate the location of the device on the page.

When you use the IC Master to find data on a particular manufacturer's products, this index provides the fastest way to find all the information.

© IC MASTER 1984

PRODUKT-VERZEICHNIS VON HERSTELLERN MIT EIGENEN DATEN-BLÄTTERN

Dieses Verzeichnis enthält die Seiten- und Zeilenangabe für jedes Produkt im Master Selection Guide, für das Hersteller ausführliche Produktinformationen übermittelt haben. Es ist alphabetisch nach Herstellern geordnet und, innerhalb jedes Herstellers, alphanumerisch nach Bauteilen. Eintragungen in Fettdruck verweisen auf Datenblätter wichtiger Produkte, die direkt vom Hersteller zur Verfügung gestellt wurden.

GEBRAUCHSANLEITUNG FÜR DAS PRODUKTVERZEICHNIS

Dieses Verzeichnis enthält viele gleichlautende Informationen wie im numerischen Typenverzeichnis, jedoch erfolgt hier die Auflistung nach Herstellern.

Wie beim Typennummern-Verzeichnis erscheinen die Bauteile in alphanumerischer Reihenfolge von links nach rechts. Die Kennbuchstaben der Hersteller sind jedoch mit enthalten, so daß Bauteile mit Buchstaben vor solchen ohne Buchstaben erscheinen (LM101 erscheint z.B. vor 1101). Die Seitennummern der Applikationsberichte sind durch ein ¶ Zeichen und Datenblätter von Herstellern durch ein ★ Zeichen angegeben. Die dem Trennstrich vorgestellten Zahlen sind die Seitenzahlen, die nachgestellten bedeuten die Zeile, in der das Bauteil auf der Seite zu finden ist.

Wenn Sie den Master benützen, um Kenndaten eines Produkts von einem bestimmten Hersteller zu finden, so geht es über dieses Verzeichnis am schnellsten.

© IC MASTER 1984

INDEX DES PRODUITS FABRIQUES PAR LES SOCIETES AYANT PARTICIPE A LA COMPILATION DE CET OUVRAGE

Cet index indique à quelle page et à quelle ligne on a fait mention d'appareils fabriqués per les sociétés qui ont bein voulu inclure dans le Guide Général de Sélection des renseignements détaillés sur leurs produits.

Les fabricants sont énumérés par ordre alphabétique, et sous chaque nom se trouve une liste alphanumérique des produits. Les titres en caractères gras vous indiquent où trouver des renseignements sur des produits d'une certaine importance. Ces informations ont été fournies par les fabricants eux-mêmes pour votre usage personnel.

COMMENT SE SERVIR DE L'INDEX DES PRODUITS

Cet index comprend beaucoup de références apparaissant déja dans l'Index des Numéros de Pièces, il se singularise cependant par le fait que les renseignements sont donnés par fabricant.

Tout comme dans l'Index des Numéros de Pièces, les numéros de modéle sont classés alphanumériquement de gauche à droit. Dans ce cas là, les préfixes des sociétés fabricantes sont inclus de facon à ce que les produits avec préfixes alphabétiques apparaissent avant ceux qui n'en ont pas (par exemple LM101 se trouvera placé avant 1101). Pour renvoi, les numéros de page des notices d'application sont indiqués per le symbole (¶), et les numeros de page contenant les renseignements fournis par les fabricants par une étoile (★). Les chiffres qui précèdent le titre sont les numéros de page, ceux qui suivent le titre indiquent à quelle ligne il a été fait mention du produit.

Lorsque vous utilisez le Guide pour trouver des renseignements sur les produits d'un fabricant donné, cet Index représente le moyen le plus rapide pour obtenir les renseignements nécessaires.

© IC MASTER 1984

INDICE DEL PRODUCTO DE LOS PUBLICADORES

Este índice denota la linea y página de cada componente en la Guia Maestra de Selección para fabricantes que han incluído información detallada del producto. Está organizada en orden alfabético por fabricante, y para cada fabricante la pieza aparece en orden alfabético y numérico. Las letras más marcadas los conduce a datos de productos importantes suplidos por el fabricante.

MODO DE EMPLEO DEL ÍNDICE DEL PRODUCTO

El índice del Producto incluye muchas de las mismas referencias incluidas en el Indice del Número de Pieza, pero en este caso, la lista está ordenada por fabricante.

Así como en el Indice de Número de Pieza, los números de modelos están en orden alfabético y numérico de izquierda a derecha. Los prefijos del fabricante están includíos de tal manera que las partes con prefijos alfabéticos aparecen antes que las que no lo tienen. (Por ejemplo, LM101 estaría encima de 1101). Páginas con notas de Aplicaciones están identificadas por el símbolo ¶ y las páginas de información del producto del fabricante por el símbolo ★. Los números que preceden al guión son el número de página, mientras que los que aparacen a continuación indican la ubicación de la pieza en la página.

Cuando usa la guía Maestra para encontrar datos sobre un producto en particular, este índice provee la manera más rápida de encontrar la información deseada.

© IC MASTER 1984

広告掲載メーカー製品インデックス

このインデックスは各マスターセレクションガイドに記載されている詳細な製品情報をのせたメーカー全ての製品のページ数とそのページの行数を示しています。メーカーはＡＢＣ順に，製品はＡＢＣ順と若い数字順にのっています。太字で記載されている製品はメーカーがのせている主要機器のデーターがそこにのっていることを示しています。

使用法

製品のインデックスはパーツナンバーインデックスと同じですがここではメーカー毎に分類されています。パーツナンバーインデックス同様型番はＡＢＣ，若い数字順に左から右へ記載されています。ここではメーカーのプリフィックスがつけられており，アルファベットのプリフィックスが付いている製品がついていない製品の前になっています。（例えばLM101は1101より前に）アプリケーションノートページは　印で又メーカーの製品情報のページは★印で示してあります。ダッシュ符号の前の数字はページ数，後の数字はそのページの製品の位置を意味します。

利用者皆様が特定メーカーの製品のデータを探される場合，このインデックスが一番速く情報を提供致します。

© IC MASTER 1984

IC MASTER

Advanced Micro Devices

Device	Page-Line
AM100415A	★ 3910
	3774-16
AM100470	★ 3914
	3779-56
AM100470A	★ 3914
	3779-42
AM100470SA	★ 3914
	3779-34
AM100474	★ 3912
	3775-69
AM100474A	★ 3912
	3775-59
AM10415	★ 3909
	3774-9
	3774-43
AM10415A	★ 3909
	3774-22
	3774-31
AM10415M	★ 3909
	3774-50
AM10415SA	★ 3909
	3774-18
	3774-23
AM10470AC	★ 3913
	3779-46
AM10470AM	★ 3913
	3779-54
AM10470C	★ 3913
	3779-59
AM10470M	★ 3913
	3779-66
AM10470SAC	★ 3913
	3779-36
AM10470SAM	★ 3913
	3779-40
AM10474AC	★ 3911
	3775-62
AM10474AM	★ 3911
	3775-67
AM10474C	★ 3911
	3775-71
AM10474M	★ 3911
	3775-77
AM1402AC	3788-5
AM1402AM	3788-6
AM1403AC	3788-15
AM1403AM	3788-16
AM1404AC	3788-23
AM1404AM	3788-24
AM1405A	3788-10
AM1406	3788-1
AM1407	3788-2
AM1408-6	2642-47
AM1408-7	2642-39
AM1408-8	2641-16
AM1500C	3162-3
AM1500L	3161-9
AM1500M	3161-10
AM1506	3788-3
AM1507	3788-4
AM1508-8	2641-17
AM1702A	3761-2
AM1702A-1	3761-22
AM1702A-2	3761-24
AM1702A-6	3761-4
AM1702AL	3761-3
AM1702AL-1	3761-23
AM1702AL-2	3761-25
AM2148-55M	3775-105
AM2147-35	3779-62
AM2147-45	3779-68
AM2147-45M	3779-69
AM2147-55	3779-82
AM2147-55M	3779-83
AM2147-70	3779-112
AM2147-70M	3779-113
AM2148-35	3775-81
AM2148-45	3775-88
AM2148-45M	3775-89
AM2148-55	3775-106
AM2148-55M	3775-107
AM2148-70	3775-125
AM2148-70M	3775-126
AM2149-35	3775-82
AM2149-45	3775-90
AM2149-45M	3775-91
AM2149-55	3775-108
AM2149-55M	3775-109
AM2149-70	3775-127
AM2149-70M	3775-128
AM2167-35	★ 3915
	3782-13
AM2167-45	★ 3915
	3782-19
AM2167-45M	★ 3915
	3782-20
AM2167-55	★ 3915
	3782-30
AM2167-55M	★ 3915
	3782-31
AM2167-70	★ 3915
	3782-44
AM2167-70M	★ 3915
	3782-45
AM2168-45	★ 3920
	3781-17
AM2168-55	★ 3920
	3781-36
AM2168-55M	★ 3920
	3781-37
AM2168-70	★ 3920
	3781-58
AM2168-70M	★ 3920
	3781-59
AM2169-45	★ 3920
	3781-18
AM2169-55	★ 3920
	3781-38
AM2169-55M	★ 3920
	3781-39
AM2169-70	★ 3920
	3781-60
AM2169-70M	★ 3920
	3781-61
AM21L41-12	3780-14
AM21L41-15	3780-19
AM21L41-20	3780-29
AM21L41-25	3780-49
AM21L47-45	3779-70
AM21L47-55	3779-84
AM21L47-70	3779-114
AM21L48-45	3775-92
AM21L48-55	3775-110
AM21L48-70	3775-129
AM21L49-45	3775-93
AM21L49-55	3775-111
AM21L49-70	3776-1
AM2401	3788-27
AM24S374	616-139
AM2502C	639-10
AM2502M	639-11
AM2503C	639-12
AM2503M	639-13
AM2504C	639-123
AM2504M	639-124
AM2505C	604-154
AM2505M	604-155
AM2506C	604-11
	¶ 250-11
AM2506M	604-12
	¶ 250-11
AM2533	3791-102
AM25LS07C	★ 1427
	616-6
AM25LS07M	★ 1427
	616-7
AM25LS08C	★ 1427
	615-101
AM25LS08M	★ 1427
	615-102
AM25LS09C	★ 1427
	629-77
AM25LS09M	★ 1427
	629-78
AM25LS138C	1345-109
AM25LS138M	1345-110
AM25LS139C	612-136
AM25LS139M	612-137
AM25LS14AC	605-13
AM25LS14AM	605-14
AM25LS14C	605-15
AM25LS14M	605-16
AM25LS15C	603-8
AM25LS15M	603-9
AM25LS168AC	611-6
AM25LS168AM	611-7
AM25LS174C	615-168
AM25LS174M	615-169
AM25LS18C	1337-9
AM25LS18M	1337-10
AM25LS190C	611-90
AM25LS192C	611-55
AM25LS192M	611-56
AM25LS22C	★ 1427
	605-128
AM25LS22M	★ 1427
	605-129
AM25LS23C	★ 1427
	632-179
	★ 1427
	3789-124
AM25LS23M	★ 1427
	632-180
	★ 1427
	3790-1
AM25LS2513C	★ 1427
	639-45
	★ 1427
	1351-139
	1355-37
AM25LS2513M	★ 1427
	639-46
AM25LS2517C	★ 1427
	604-45
AM25LS2517M	★ 1427
	604-46
AM25LS2518C	★ 1427
	615-85
AM25LS2518M	★ 1427
	615-86
AM25LS2519C	★ 1427
	615-119
AM25LS2519M	★ 1427
	615-120
AM25LS2520C	★ 1427
	616-26
AM25LS2520M	★ 1427
	616-27
AM25LS2521C	★ 1427
	603-100
	¶ 250-12
AM25LS2521M	★ 1427
	603-101
	¶ 250-12
AM25LS2535C	★ 1427
	630-19
AM25LS2535M	★ 1427
	630-20
AM25LS2536C	★ 1427
	613-82
AM25LS2536M	★ 1427
	613-83
AM25LS2537C	★ 1427
	612-114
AM25LS2537M	★ 1427
	612-115
AM25LS2538C	★ 1427
	613-88
AM25LS2538M	★ 1427
	613-89
AM25LS2539C	★ 1427
	613-8
AM25LS2539M	★ 1427
	613-9
AM25LS2548C	613-56
AM25LS2568C	★ 1427
	611-27
AM25LS2568M	★ 1427
	611-28
AM25LS2569C	★ 1427
	609-74
AM25LS2569M	★ 1427
	609-75
AM25LS273	★ 1427
AM25LS299	★ 1427
AM25LS373	★ 1427
AM25LS374	★ 1427
AM25LS377	★ 1427
AM25LS378C	616-8
AM25LS378M	616-9
AM25LS379C	615-103
AM25LS379M	615-104
AM25LS381	★ 1427
AM25LS399C	629-79
AM25LS399M	629-80
AM25LS533	★ 1427
AM25LS534	★ 1427
AM25S05C	604-158
AM25S05M	604-159
AM25S07C	★ 1427
	616-22
AM25S07M	★ 1427
	616-23
AM25S08C	★ 1427
	615-115
AM25S08M	★ 1427
	615-116
AM25S09C	★ 1427
	629-109
AM25S09M	★ 1427
	629-110
AM25S10C	★ 1427
	638-146
	¶ 250-2
AM25S10M	★ 1427
	638-147
	¶ 250-2
AM25S11C	638-112
AM25S12AC	638-113
AM25S12AM	638-114
AM25S12M	638-115
AM25S18C	★ 1427
	615-90
AM25S18M	★ 1427
	615-91
AM25S373	★ 1427
	626-88
AM25S374	★ 1427
AM25S533	★ 1427
	626-133
AM25S534	★ 1427
	626-134
AM25S557	★ 701
	604-112
AM25S558	★ 701
	604-113
AM2602C	631-1
AM2602M	631-2
AM26123C	630-156
AM26123M	630-157
AM26LS29C	2668-45
	¶ 287-11
AM26LS29M	2668-47
	¶ 287-11
AM26LS30C	2668-58
	2671-17
	¶ 287-11
AM26LS30M	2668-60
	2671-19
	¶ 287-11
AM26LS31C	2671-34
	¶ 287-11
AM26LS31M	2671-35
	¶ 287-11
AM26LS32C	2674-25
	¶ 287-11
AM26LS32M	2674-26
	¶ 287-11
AM26LS33C	2674-38
AM26LS33M	2674-39
AM26LS38	638-8
AM26S02C	631-15
AM26S02M	631-16
AM26S10C	638-116
	2676-53
AM26S10M	638-117
	2676-46
AM26S11C	2676-54
AM26S11M	638-118
	2676-47
AM26S12AC	2675-5
AM26S12AM	2675-6
AM26S12C	638-119
	2676-40
AM26S12M	2676-41
AM2708	3763-122
AM2708-13	3763-116
AM27128	★ 3929
	3766-128
AM27128-1	★ 3929
	3766-119
AM27128-15	★ 3929
	3766-120
AM27128-2	★ 3929
	3766-121
AM27128-20	★ 3929
	3766-122
	3766-123
AM27128-25	★ 3929
	3767-1
	3767-2
AM27128-3	★ 3929
	3767-10
AM27128-30	★ 3929
	3767-11
AM27128-4	★ 3929
	3767-21
AM27128-45	★ 3929
	3767-22
	3767-23
AM2716	3765-70
AM2716-1	3765-51
AM2716-2	3765-61
AM2716M	3765-71
AM27256	★ 3930
	3767-35
AM27256-1	★ 3930
	3767-29
AM27256-2	★ 3930
	3767-31
AM27256-20	★ 3930
	3767-32
AM27256-25	★ 3930
	3767-36
AM27256-3	★ 3930
	3767-40
AM27256-30	★ 3930
	3767-41
AM27256-4	★ 3930
	3767-43
AM27256-45	★ 3930
	3767-44
AM2732A	★ 3926
	3766-35
AM2732A-1	★ 3926
	3766-27
AM2732A-15	★ 3926
	3766-28
AM2732A-2	★ 3926
	3766-29
AM2732A-20	★ 3926
	3766-30
AM2732A-25	★ 3926
	3766-36
	3766-37
AM2732A-3	★ 3926
	3766-43
AM2732A-30	★ 3926
	3766-44
AM2732A-4	★ 3926
	3766-54
AM2732A-45	★ 3926
	3766-55
	3766-56
AM2764-20	★ 3928
	3766-77
AM2764-25	★ 3928
	3766-86
AM2764-30	★ 3928
	3766-97
AM2764-45	★ 3928
	3766-109
AM27LS00AC	3772-18
AM27LS00AM	3772-27
AM27LS00C	3772-28
AM27LS00LC	3772-51
AM27LS00LM	3772-53
AM27LS00M	3772-38
AM27LS01AC	3772-23
AM27LS01AM	3772-24
AM27LS01LC	3772-50
AM27LS01LM	3772-52
AM27LS01M	3772-35
AM27LS02C	3771-13
	3771-36
AM27LS02M	3771-40
AM27LS03C	3771-16
	3771-37
AM27LS03M	3771-41
AM27LS06C	3771-14
AM27LS06M	3771-19
AM27LS07C	3771-17
AM27LS07M	3771-29
AM27LS184M	3764-47
AM27LS185C	3764-40
AM27LS185M	3764-48
AM27LS18C	3760-36
AM27LS19C	3760-42
AM27LS19M	3760-57
AM27PS181	3763-15
AM27PS185C	3764-41
AM27PS185M	3764-49
AM27PS191C	3764-114
AM27PS191M	3765-21
AM27PS281	3763-16
AM27PS291AM	3765-22
AM27PS291C	3764-115
AM27PS41	3765-103
AM27S02AC	3770-81
AM27S02AM	3770-88
AM27S02C	3770-95
AM27S02M	3770-116
AM27S03AC	3770-84
AM27S03AM	3770-91
AM27S03C	3770-106
AM27S03M	3770-117
AM27S06AC	3770-82
AM27S06AM	3770-89
AM27S06C	3770-83
AM27S06M	3770-90
AM27S07AC	3770-85
AM27S07AM	3770-92
AM27S07C	3770-86
AM27S07M	3770-93
AM27S12AC	3761-26
AM27S12AM	3761-28
AM27S12C	3761-33
AM27S12M	3761-50
AM27S13AC	3761-27
AM27S13AM	3761-29
AM27S13C	3761-36
AM27S13M	3761-53
AM27S15C	3762-11
AM27S15M	3762-52
AM27S180AC	★ 3905
	3763-25
AM27S180AM	★ 3905
	3763-42
AM27S180C	★ 3905
	3763-59
AM27S180M	★ 3905
	3763-92
AM27S181AC	★ 3905
	3763-30
AM27S181AM	★ 3905
	3763-44
AM27S181C	★ 3905
	3763-65
AM27S181M	★ 3905
	3763-94
AM27S184AC	3764-7
AM27S184AM	3764-19
AM27S184C	3764-25
AM27S184M	3764-32
AM27S185AC	3764-9
AM27S185AM	3764-21
AM27S185C	3764-26
AM27S185M	3764-34
AM27S18AC	3760-20
AM27S18AM	3760-24
AM27S18C	3760-30
AM27S18M	3760-37
AM27S190AC	3764-82
AM27S190C	3764-108
AM27S190M	3765-18
AM27S191	3764-116
AM27S191A	3764-84
AM27S191AM	3764-117
AM27S19AC	3760-22
AM27S19AM	3760-27
AM27S19C	3760-32
AM27S19M	3760-43
AM27S20AC	3760-69
AM27S20AM	3760-73
AM27S20C	3760-77
AM27S20M	3760-100
AM27S21AC	3760-70
AM27S21AM	3760-75
AM27S21C	3760-80
AM27S21M	3760-106
AM27S25AC	3761-83
AM27S25AM	3761-84
AM27S25C	3761-86
AM27S25M	3761-88
AM27S27C	3761-85
AM27S27M	3761-87
AM27S280AC	★ 3905
	3763-26
AM27S280AM	★ 3905
	3763-43
AM27S280C	★ 3905
	3763-60
AM27S280M	★ 3905
	3763-93
AM27S281AC	★ 3905
	3763-31
AM27S281AM	★ 3905
	3763-45

Arranged alphanumerically from left to right.

© IC MASTER 1984

Advanced Micro Devices (Cont'd)

Device	Page-Line
AM27S281C	★ 3905
	3763-66
AM27S281M	★ 3905
	3763-95
AM27S28AC	3761-92
AM27S28AM	3761-103
AM27S28C	3761-119
AM27S28M	3762-16
AM27S290AC	3764-83
AM27S290AM	3764-109
AM27S290C	3764-110
AM27S291	3764-118
AM27S291A	3764-85
AM27S291AM	3764-119
AM27S291M	3765-23
AM27S29AC	3761-98
AM27S29AM	3761-109
AM27S29C	3761-121
AM27S29M	3762-22
AM27S30AC	3761-94
AM27S30AM	3761-106
AM27S30C	3761-120
AM27S30M	3762-26
AM27S31AC	3761-100
AM27S31AM	3761-115
AM27S31C	3761-123
AM27S31M	3762-23
AM27S32AC	3762-68
AM27S32AM	3762-82
AM27S32C	3762-98
AM27S32M	3762-120
AM27S33AC	3762-69
	3762-71
AM27S33AM	3762-86
AM27S33C	3762-102
AM27S33M	3762-121
AM27S35AC	★ 3901
	3763-17
AM27S35AM	★ 3901
	3763-18
AM27S35C	★ 3901
	3763-19
AM27S35M	★ 3901
	3763-20
AM27S37	★ 3901
	3763-27
AM27S37A	★ 3901
	3763-21
AM27S40	★ 3907
	3765-101
AM27S40A	★ 3907
	3765-90
AM27S40AM	★ 3907
	3765-102
AM27S40M	★ 3907
	3765-114
AM27S41	★ 3907
	3765-104
AM27S41A	★ 3907
	3765-91
AM27S41AM	★ 3907
	3765-105
AM27S41M	★ 3907
	3765-115
AM27S43	★ 3908
	3765-121
AM27S43A	★ 3908
	3765-118
AM27S45	★ 3904
	3764-70
AM27S45A	★ 3904
	3764-71
AM27S47	★ 3904
	3764-72
AM27S47A	★ 3904
	3764-73
AM27S65	★ 3902
	3762-65
AM27S75	★ 3902
	3764-5
AM27S85	★ 3902
	3765-89
AM2802C	3788-7
AM2802M	3788-8
AM2803C	3788-17
AM2803M	3788-18
AM2804C	3788-25
AM2804M	3788-26
AM2805C	3788-13
AM2805M	3788-11
AM2806C	3788-21
AM2806M	3788-19
AM2807C	3788-14
AM2807M	3788-12
AM2808C	3788-22
AM2808M	3788-20
AM2809C	3791-86
AM2809M	3791-82
AM2810C	3791-83
AM2810M	3791-84
AM2812AC	3757-20
AM2812AL	3757-21
AM2812C	3757-16
AM2812L	3757-17
AM2813AC	3757-25
AM2813AL	3757-26
AM2813C	3757-22
AM2813L	3757-23
AM2814C	3791-87
AM2814M	3791-88
AM2825C	3788-34
AM2825M	3788-32
AM2826C	3788-35
AM2826M	3788-33
AM2827C	3788-38
AM2827M	3788-37
AM2833C	3791-103
AM2833M	3791-104
AM2841A	3757-40
AM2841C	3757-36
AM2841M	3757-37
AM2847C	3791-71
AM2847M	3791-68
AM2855	3791-89
AM2856	3791-96
AM2857C	3791-99
AM2896C	3791-79
AM2896M	3791-78
AM2900	★ 1401
	¶ 271-16
AM2901AC	★ 1401
	605-49
AM2901AM	★ 1401
	605-50
AM2901B	★ 1401
	1257-3
AM2901BC	★ 1401
	605-51
	★ 1401
	1336-47
AM2901BM	★ 1401
	605-52
	★ 1401
	1336-48
AM2901C	★ 1401
	605-53
	★ 1401
	1257-4
AM2901M	★ 1401
	605-54
AM2902AC	1336-101
AM2902AM	1336-102
AM2903	★ 1402
	1257-5
AM2903AC	★ 1402
	1336-49
AM2903AM	★ 1402
	1336-50
AM2903C	★ 1402
	605-55
	★ 1402
	1336-51
AM2903M	★ 1402
	605-56
	★ 1402
	1336-52
AM2904C	★ 1404
	1336-92
	¶ 271-9
AM2904M	★ 1404
	1336-93
	¶ 271-9
AM2905C	★ 1405
	2676-44
	★ 1405
	1336-56
AM2905M	★ 1405
	2676-37
	★ 1405
	1336-57
AM2906C	★ 1405
	2676-45
	★ 1405
	1336-58
AM2906M	★ 1405
	2676-38
	★ 1405
	1336-59
AM2907C	★ 1406
	2676-42
	★ 1406
	1336-60
AM2907M	★ 1406
	2676-35
	★ 1406
	1336-61
AM2908C	★ 1406
	2676-43
AM2908M	★ 1406
	2676-36
AM2909A	★ 1407
	637-41
AM2909AC	★ 1407
	1336-111
AM2909C	★ 1407
	637-42
	★ 1407
	1336-112
AM2909M	★ 1407
	637-43
AM2910C	★ 1408
	1350-40
	¶ 271-9
AM2910M	★ 1408
	1350-41
	¶ 271-9
AM29112	★ 1423
	1350-43
AM29116	★ 1424
	1283-28
	¶ 261-15
	¶ 271-9
AM2911A	★ 1407
	637-44
	★ 1407
	1336-113
AM2911C	★ 1407
	637-45
AM2911M	★ 1407
	637-46
AM2912C	★ 1409
	1336-62
AM2913C	★ 1409
	639-47
	¶ 271-16
	★ 1409
	1336-132
	¶ 271-16
AM2913M	★ 1409
	639-48
	¶ 271-16
	★ 1409
	1336-133
	¶ 271-16
AM2914C	★ 1410
	1336-130
	1355-38
	¶ 271-9
	¶ 271-16
AM2914M	★ 1410
	1336-131
	1355-39
	¶ 271-9
	¶ 271-16
AM2915AC	★ 1411
	2675-47
	★ 1411
	1336-63
AM2915AM	★ 1411
	2675-21
	★ 1411
	1336-64
AM2916AC	★ 1411
	2675-48
	★ 1411
	1336-65
AM2916AM	★ 1411
	2675-22
	★ 1411
	1336-66
AM2917AC	★ 1412
	2675-49
	★ 1412
	1336-67
AM2917AM	★ 1412
	2675-23
	★ 1412
	1336-68
AM2918C	★ 1413
	615-83
	★ 1413
	1337-11
AM2918M	★ 1413
	615-84
	★ 1413
	1337-12
AM2919C	★ 1413
	1337-7
AM2919M	★ 1413
	1337-8
AM29203	★ 1402
	605-57
	★ 1402
	1257-6
AM2920C	★ 1414
	616-28
	★ 1414
	1337-17
AM2920M	★ 1414
	616-29
	★ 1414
	1337-18
AM2921C	★ 1414
	612-31
	★ 1414
	1337-33
AM2921M	★ 1414
	612-32
	★ 1414
	1337-34
AM2922C	★ 1415
	630-21
	★ 1415
	1337-45
AM2922M	★ 1415
	630-22
	★ 1415
	1337-46
AM2923C	★ 1415
	1337-47
AM2924C	★ 1416
	1336-78
AM2925C	★ 1416
	1336-75
AM2925M	★ 1416
	1336-76
AM2926C	★ 1417
	1337-5
AM2927C	★ 1417
	1336-69
AM2928C	★ 1417
	1336-70
AM2929C	★ 1417
	1337-6
AM2940C	★ 1418
	1336-79
AM2940M	★ 1418
	1336-80
AM2942C	★ 1419
	1336-81
AM2942M	★ 1419
	1336-82
AM2946C	★ 1420
	1336-71
AM2947C	★ 1420
	1336-72
AM2948C	★ 1420
	1336-73
AM2949C	★ 1420
	1336-74
AM29501	★ 702
	637-77
AM29509	605-31
	1336-118
AM2950C	★ 1421
	1337-41
AM2950M	★ 1421
	1337-42
AM29510	605-36
	1336-120
AM29516	★ 701
	604-148
AM29517	★ 701
	604-149
AM2951C	★ 1421
	1337-43
AM2951M	★ 1421
	1337-44
AM29520	★ 702
	637-57
AM29521	★ 702
	637-58
AM2952C	1337-36
AM2952M	1337-37
AM2953C	1337-38
AM2953M	1337-39
AM29540	★ 703
	637-76
AM2954C	★ 1422
	1337-31
AM2955C	★ 1422
	1337-32
AM2956C	★ 1422
	1337-21
AM2957C	★ 1422
	1337-22
AM2958C	★ 1423
	1337-15
AM2959C	★ 1423
	1337-16
AM2960C	1336-87
AM2960M	1336-88
AM2961C	1336-94
AM2961M	1336-95
AM2962C	1336-96
AM2964B	1336-83
AM2965C	2683-98
	1337-23
AM2965M	2683-99
	1337-24
AM2966C	2683-100
	1337-25
AM2966M	2683-101
	1337-26
AM2968	2680-97
	1336-84
AM2969	2680-87
	1336-105
AM2970	2680-89
	1336-108
AM29704C	627-54
AM29704M	627-55
AM29705C	★ 1425
	627-65
	★ 1425
	3771-7
	★ 1425
	1336-136
AM29705M	★ 1425
	627-66
	★ 1425
	3771-18
	★ 1425
	1336-137
AM29707	★ 1425
	1336-138
AM29720C	3772-25
AM29720M	3772-36
AM29721C	3772-29
AM29721M	3772-39
AM29760AM	3760-101
AM29800Series	★ 2801
AM29803AC	★ 1426
	1337-49
AM29803AM	★ 1426
	1337-50
AM29806	1337-35
AM29809	1337-48
AM29811AC	★ 1426
	1336-124
AM29811AM	★ 1426
	1336-125
AM29818	1337-40
AM29821	★ 2802
	633-32
AM29822	★ 2802
	633-33
AM29823	★ 2802
	633-25
AM29824	★ 2802
	633-26
AM29825	★ 2802
	632-73
AM29826	★ 2802
	632-74
AM29827	★ 2804
	606-115
AM29828	★ 2804
	606-116
AM29833	★ 2806
	636-94
AM29834	★ 2806
	636-95
AM29841	★ 2807
	626-154
AM29842	★ 2807
	626-155
AM29843	★ 2807
	626-148
AM29844	★ 2807
	626-149
AM29845	★ 2807
	626-140
AM29846	★ 2807
	626-141
AM29853	636-96
AM29854	636-97
AM29861	★ 2804
	636-104
AM29862	★ 2804
	636-105
AM29863	★ 2804
	636-103
AM29864	★ 2804
	636-102
AM29L509	605-32
	1336-119
AM29L510	605-37
	1336-121
AM29L516	604-150
	1336-122
AM29L517	604-151
	1336-123
AM29LS18	★ 1413
	615-87
AM3101	3771-20
AM3101-1C	3770-96
AM3101-1M	3770-118
AM3101AC	3770-97
AM3101AM	3770-119
AM31L01C	3771-42
AM31L01M	3771-43
AM3212	1345-138
AM3216	1345-53
AM3226	1345-54
AM3341C	3757-33
AM3347	3791-65
AM3448A	2675-34
AM35LS190M	611-91
AM4044C	3780-78
AM4055	3791-90
AM4056	3791-97
AM4057	3791-100
AM4244C	3780-79
AM5055	3791-91
AM5056	3791-98
AM5057	3791-101
AM5489	3771-21
AM6012C	★ 3301
	2650-28
	¶ 279-13
AM6012M	★ 3301
	2650-29
	¶ 279-13
AM6070AC	2643-19
	2656-31
AM6070AM	2643-20
	2656-32
AM6070C	2643-24
	2656-34
AM6070M	2643-25
	2656-35
AM6072C	2643-17
	2656-29
AM6072M	2643-18
	2656-30
AM6080AC	2639-36
AM6080AM	2639-37
AM6080C	2640-50
AM6080M	2640-51
AM6081AC	2639-38
AM6081AM	2639-39
AM6081C	2640-52
AM6081M	2640-53
AM6082C	2649-13

¶ Indicates page number in Application Note Directory.
★ Indicates additional data is provided on the page noted.

IC MASTER

Advanced Micro Devices (Cont'd)

Device	Page-Line
AM6108	★ 3303
	2626-5
AM6112	★ 3306
	2634-25
AM6148	★ 3303
	2626-6
AM6300	★ 3312
	3235-136
AM6301	★ 3315
	3230-24
AM6688	★ 3309
	3236-39
AM6688L-6	★ 3309
	3236-40
AM6688L-7	★ 3309
	3236-41
AM6688L-8	★ 3309
	3236-42
AM6688M-6	★ 3309
	3236-43
AM6688M-7	★ 3309
	3236-44
AM6688M-8	★ 3309
	3236-45
AM685L	3159-17
AM685M	3159-18
AM686C	637-85
	3159-34
AM686M	637-86
	3159-19
AM687AL	3160-59
AM687AM	3160-46
AM687L	3160-60
AM687M	3160-47
AM7791	1353-65
AM7838	2676-24
AM7910	★ 1433
	★ 3321
	3217-128
AM7990	★ 1433
	★ 3327
	1353-58
	1353-61
	1353-62
AM7991	★ 1433
	★ 3327
	2685-91
	★ 1433
	★ 3327
	1353-66
AM7995	1353-67
AM8021	1344-76
AM8031	1345-1
AM8035	1344-3
	1265-31
AM8039	1344-4
	1265-32
AM8041A	1347-39
AM8048	1344-37
	1265-33
AM8049	1344-38
	1265-34
AM8051	1345-9
AM8052	★ 1433
	1352-98
AM8080A	1345-21
	1267-1
AM8080A-1	1345-22
AM8080A-2	1345-23
AM8080A-4	1345-24
AM8085A	★ 1435
	1346-92
	★ 1435
	1267-2
AM8085A-2	★ 1435
	1346-93
AM8086	★ 1429
	★ 1432
	1349-5
	★ 1429
	★ 1432
	1283-29
AM8086-1	★ 1429
	★ 1432
	1349-6
AM8086-2	★ 1429
	★ 1432
	1349-7
AM8087	★ 1432
	1349-101
AM8088	★ 1429
	1349-107
	★ 1429
	1283-14
AM8089	★ 1432
	1283-15
AM8152	★ 1433
	1351-41
	1354-68
AM8153	1351-42
	1354-69
AM8155	1344-136
	1347-15
AM8155-2	1344-137
	1347-16
AM8156	1344-138
	1347-17
AM8156-2	1344-139
	1347-18
AM8212C	1345-139
AM8212M	1345-140
AM8216	1345-55
AM8224C	1345-85
AM8224M	1345-86
AM8226	1345-56
AM8228C	1346-69
AM8228M	1346-70
AM8237A	1346-146
AM8238C	1346-71
AM8238M	1346-72
AM8251	★ 1436
	1346-8
	1346-142
AM8251A	★ 1436
	1344-112
AM8253	★ 1436
	1344-124
	1346-38
AM8253-5	★ 1436
	1347-3
AM8255A	★ 1437
	1344-128
	1346-44
AM8255A-5	★ 1437
	1344-129
	1346-45
	1347-9
AM8257	★ 1438
	1346-24
	1346-153
AM8279	★ 1439
	1345-151
AM8279-5	★ 1439
	1345-152
AM8279-8	★ 1439
	1345-153
AM82S62C	★ 1427
	639-95
AM82S62M	★ 1427
	639-96
AM8308	3783-67
AM8316EB	3784-22
AM8316EC	3784-7
AM8748	1343-143
AM9016C	★ 3918
	3769-17
AM9016D	★ 3918
	3769-4
AM9016E	★ 3918
	3768-101
AM9016F	★ 3918
	3782-71
AM9044B	3780-112
AM9044BM	3780-113
AM9044CM	3780-80
AM9044D	3780-50
AM9044DM	3780-51
AM9044E	3780-30
AM9064-10	★ 3919
	3782-105
AM9064-12	★ 3919
	3782-108
AM9064-15	★ 3919
	3782-111
AM9080A	1267-3
AM9080AC	1345-25
AM9080AM	1345-26
AM9085A	1346-94
AM90L44B	3780-114
AM90L44BM	3780-115
AM90L44C	3780-81
AM90L44CM	3780-82
AM90L44D	3780-52
AM9101A	3773-95
AM9101AM	3773-96
AM9101B	3773-66
AM9101BM	3773-67
AM9101C	3773-42
AM9101CM	3773-43
AM9101D	3773-24
AM9111A	3773-97
AM9111AM	3773-98
AM9111B	3773-68
AM9111BM	3773-69
AM9111C	3773-44
AM9111CM	3773-45
AM9111D	3773-25
AM9112A	3773-90
AM9112AM	3773-91
AM9112B	3773-70
AM9112BM	3773-71
AM9112C	3773-46
AM9112CM	3773-47
AM9112D	3773-26
AM9114B	3777-16
AM9114BM	3777-17
AM9114C	3776-112
AM9114CM	3776-113
AM9114E	3776-52
AM9114EM	3776-53
AM9122-25	★ 3916
	3772-88
AM9122-35	★ 3916
	3772-92
AM9122-35M	★ 3916
	3772-93
AM9124B	3777-18
	¶ 321-18
AM9124BM	3777-19
	¶ 321-18
AM9124C	3776-114
	¶ 321-18
AM9124CM	3776-115
	¶ 321-18
AM9128	★ 3917
	3778-70
AM9128-10	★ 3917
	3778-11
AM9128-12M	★ 3917
	3778-41
AM9128-15M	★ 3917
	3778-71
AM9128-20	★ 3917
	3778-120
AM9128-20M	★ 3917
	3778-121
AM9128-70	★ 3917
	3777-122
AM9130A	3777-44
AM9130AM	3777-45
AM9130B	3777-7
AM9130BM	3777-8
AM9130C	3777-1
AM9130CM	3777-2
AM9130D	3776-99
AM9130E	3776-81
AM9140A	3780-129
AM9140AM	3780-130
AM9140B	3780-107
AM9140BM	3780-108
AM9140C	3780-98
AM9140CM	3780-99
AM9140D	3780-68
AM9140E	3780-45
AM9150-25	★ 3921
	3775-75
AM9150-35	★ 3921
	3775-84
AM9150-35M	★ 3921
	3775-85
AM9150-45	★ 3921
	3775-99
AM9150-45M	★ 3921
	3775-100
AM9152	1344-169
AM91L01A	3773-99
AM91L01AM	3773-100
AM91L01B	3773-72
AM91L01BM	3773-73
AM91L01C	3773-48
AM91L01CM	3773-49
AM91L111AM	3773-101
AM91L111C	3773-50
AM91L11A	3773-102
AM91L11B	3773-74
AM91L11BM	3773-75
AM91L11CM	3773-51
AM91L12A	3773-92
AM91L12AM	3773-93
AM91L12B	3773-76
AM91L12BM	3773-77
AM91L12C	3773-52
AM91L12CM	3773-53
AM91L14B	3777-20
AM91L14BM	3777-21
AM91L14C	3776-116
AM91L14CM	3776-117
AM91L14E	3776-54
AM91L14EM	3776-55
AM91L22-35	★ 3916
	3772-94
AM91L22-45	★ 3916
	3772-104
AM91L22-45M	★ 3916
	3772-105
AM91L22-60	★ 3916
	3772-112
AM91L24B	3777-22
AM91L24BM	3777-23
AM91L24C	3776-118
AM91L24CM	3776-119
AM91L30A	3777-46
AM91L30AM	3777-47
AM91L30B	3777-9
AM91L30BM	3777-10
AM91L30C	3777-3
AM91L30CM	3777-4
AM91L40A	3780-131
AM91L40AM	3780-132
AM91L40B	3780-109
AM91L40BM	3780-110
AM91L40C	3780-100
AM91L40CM	3780-101
AM92128-20	★ 3924
	3786-116
AM92128-25	★ 3924
	3787-4
AM92128-30	★ 3924
	3787-15
AM92128-45	★ 3924
	3787-29
AM92128B	★ 3924
	3787-30
AM92128C	★ 3924
	3787-16
AM92128D	★ 3924
	3787-5
AM92217AC	3784-49
AM9217AM	3784-50
AM9217BC	3784-23
AM9217BM	3784-24
AM9218BC	3784-25
AM9218BM	3784-26
AM9218C	3784-8
AM92256-20	★ 3925
	3787-49
AM92256-30	★ 3925
	3787-75
AM92256-45	★ 3925
	3787-91
AM9232BC	3784-129
AM9232BM	3785-1
AM9232C	3784-81
AM9233BC	3785-2
AM9233BM	3785-3
AM9233C	3784-82
AM9240-35	3785-42
AM9244B	3780-116
AM9244BM	3780-117
AM9244CM	3780-83
AM9244D	3780-53
AM9244DM	3780-54
AM9244E	3780-31
AM9264-20	★ 3922
	3785-60
AM9264B	★ 3922
	3786-72
AM9264C	★ 3922
	3785-126
AM9264D	★ 3922
	3785-81
AM9265-20	★ 3923
	3785-52
AM9265B	★ 3923
	3786-87
AM9265C	★ 3923
	3786-20
AM9265D	★ 3923
	3785-98
AM9280-35	3786-109
AM92L44B	3780-118
AM92L44BM	3780-119
AM92L44C	3780-84
AM92L44CM	3780-85
AM92L44D	3780-55
AM93412	3772-98
AM93412AC	3772-95
AM93412AM	3772-106
AM93412M	3772-113
AM93415AC	3774-39
AM93415AM	3774-52
AM93415C	3774-62
AM93415M	3774-83
AM93422	3772-101
AM93422AC	3772-96
AM93422AM	3772-108
AM93422M	3772-115
AM93425AC	3774-40
AM93425AM	3774-53
AM93425C	3774-66
AM93425M	3774-84
AM93L412	3772-114
AM93L412AC	3772-107
AM93L412AM	3772-110
AM93L412M	3772-119
AM93L415C	3774-76
AM93L415M	3774-96
AM93L422	3772-116
AM93L422AC	3772-109
AM93L422AM	3772-111
AM93L422M	3772-120
AM93L425M	3774-100
AM93S10	★ 1427
	610-67
AM93S16C	★ 1427
	608-35
AM93S16M	★ 1427
	608-36
AM93S48C	★ 1427
	639-131
AM93S48M	★ 1427
	639-132
AM94/1530	★ 2005
AM94/1541	★ 2005
AM94/2000	★ 2005
AM9401C	3788-28
AM9401M	3788-29
AM95/4006	1955-2
AM95/4010	1955-1
AM95/6120	★ 2004
AM9511	★ 1440
	1354-109
	¶ 276-4
AM9511A	★ 1440
	640-1
	¶ 276-4
	★ 1440
	1354-110
	¶ 276-4
AM9511A-1	★ 1440
	1345-46
	¶ 276-4
AM9511A-5	★ 1440
	640-2
	¶ 276-4
	★ 1440
	1354-111
	¶ 276-4
AM9511ADM	★ 1440
	1345-47
	¶ 276-4
AM9512	★ 1441
	1354-112
	¶ 276-4
AM9513	★ 1433
	★ 1436
	★ 1442
	1351-154
	1355-52
AM9516	★ 1433
AM9517A	★ 1438
	★ 1443
	1351-113
	1355-11
AM9517A-5	★ 1438
	★ 1443
	1346-25
AM9518	★ 1433
	★ 1444
	1345-107
AM9519A	★ 1445
	1354-32
AM9520	★ 1433
	★ 1446
	1355-4
AM9551	★ 1436
	1346-9
AM9555ADM	1346-46
AM9557	★ 1438
	1346-26
	1346-154
AM96/4116A	★ 2001
	1965-14
AM96/4126	★ 2001
	1965-38
AM96/5232	★ 2004
AM97/0008	★ 2003
AM97/0064	★ 2003
AM97/0128	★ 2003
AM97/0256	★ 2003
AM97/0343	★ 2002
AM97/0512	★ 2003
AM97/8605	★ 2002
AM9708	3763-123
AM9716	3765-44
AMPAL16H8AC	★ 4600
	4480-25
AMPAL16H8AM	★ 4600
	4480-59
AMPAL16H8C	★ 4600
	4480-92
AMPAL16H8LC	★ 4600
	4480-93
AMPAL16H8LM	★ 4600
	4481-31
AMPAL16H8M	★ 4600
	4481-32
AMPAL16HD8AC	★ 4600
	4480-26
AMPAL16HD8AM	★ 4600
	4480-60
AMPAL16HD8C	★ 4600
	4480-94
AMPAL16HD8LC	★ 4600
	4480-95
AMPAL16HD8LM	★ 4600
	4481-33
AMPAL16HD8M	★ 4600
	4481-34
AMPAL16L8AC	★ 4600
	4480-27
AMPAL16L8AM	★ 4600
	4480-61
AMPAL16L8C	★ 4600
	4480-96
AMPAL16L8LC	★ 4600
	4480-97
AMPAL16L8LM	★ 4600
	4481-35
AMPAL16L8M	★ 4600
	4481-36
AMPAL16LD8AC	★ 4600
	4480-28
AMPAL16LD8AM	★ 4600
	4480-62
AMPAL16LD8C	★ 4600
	4480-98
AMPAL16LD8LC	★ 4600
	4480-99
AMPAL16LD8LM	★ 4600
	4481-37
AMPAL16LDM	4481-38
AMPAL16R4AC	★ 4600
	4480-29
AMPAL16R4AM	★ 4600
	4480-63
AMPAL16R4C	★ 4600
	4480-100
AMPAL16R4LC	★ 4600
	4480-101
AMPAL16R4LM	★ 4600
	4481-39
AMPAL16R4M	★ 4600
	4481-40
AMPAL16R6AC	★ 4600
	4480-30

Arranged alphanumerically from left to right.

© IC MASTER 1984

Advanced Micro Devices (Cont'd)

Device	Page-Line
AMPAL16R6AM	★ 4600
	4480-64
AMPAL16R6C	★ 4600
	4480-102
AMPAL16R6LC	★ 4600
	4480-103
AMPAL16R6LM	★ 4600
	4481-41
AMPAL16R6M	★ 4600
	4481-42
AMPAL16R8AC	★ 4600
	4480-31
AMPAL16R8AM	★ 4600
	4480-65
AMPAL16R8C	★ 4600
	4480-104
AMPAL16R8LC	★ 4600
	4480-105
AMPAL16R8LM	★ 4600
	4481-43
AMPAL16R8M	★ 4600
	4481-44
AMPAL22V10	★ 4600
	4480-106
AMPAL22V10A	★ 4600
	4480-32
AMS7S8/8112	1809-1
AMSYS/29	1809-2
AMSYS29/10	★ 1428
	★ 1901
	1809-3
AMSYS8/8	1809-4
AMSYS8/8000 Series	1809-5
AMSYS8/8116	1809-6
AMZ8001	1350-116
	1283-30
AMZ8002	1350-111
	1283-31
AMZ8016	1351-11
AMZ8030	1351-35
AMZ8036	1351-4
AMZ8038	1351-18
AMZ8052	1351-8
AMZ8060	1351-15
AMZ8065	1351-1
	1355-5
AMZ8068	1351-9
AMZ8073	1351-39
AMZ8103	1351-45
AMZ8104	1351-46
AMZ8107	1351-47
AMZ8108	1351-48
AMZ8120	1351-51
AMZ8121	1351-54
AMZ8127	1351-3
AMZ8133	1351-49
AMZ8136	1351-53
AMZ8140	1351-43
AMZ8144	1351-44
AMZ8148	1351-52
AMZ8160	1351-14
AMZ8161	1351-25
AMZ8162	1351-26
AMZ8163	1351-27
AMZ8164B	1351-13
AMZ8165	1351-33
AMZ8166	1351-34
AMZ8173	1351-50
AMZ8530	★ 1433
	1354-22
DAC-08	2640-19
DAC-080QF	2639-12
DAC-08A	2639-13
DAC-08C	2642-25
DAC-08E	2640-34
DP7303	2677-19
DP7304B	2677-5
DP7307	2677-20
DP7308	2677-21
DP8303	2677-22
DP8304B	635-105
	2677-6
DP8307	2677-23
DP8308	2677-24
LF111	3159-60
LF155	3175-47
	3186-10
LF155A	3189-38
LF156	3194-60
LF156A	3189-48
LF198	3237-158
LF211	3159-61
LF255	3194-54
LF256	3195-1
LF298	3237-159
LF311	3160-43
LF355	3200-43
LF355A	3189-39
LF356	3200-48
LF356A	3189-49
LF398	3237-160
LH211	3161-2
LH2111	3161-3
LH2211	3161-4
LH2311	3161-63
LM108	3190-31
LM108A	3186-17
LM111	3159-52
LM118	3193-44
LM119	3161-19
LM139	3162-51
LM139A	3162-20
LM148	3211-31
LM208	3190-32
LM208A	3186-18
LM211	3159-53
LM218	3193-45
LM219	3161-20
LM239	3163-5
LM239A	3162-29
LM248	3212-27
LM308	3199-28
LM308A	3186-48
LM311	3160-40
LM318	3201-35
LM319	3162-4
LM339	3163-6
LM339A	3162-30
LM348	3212-28
M3212	1345-141
M3216	1345-57
M3226	1345-58
M8216	1345-59
M8226	1345-60
MCA1200	4460-27
MCA600	4460-23
MK1002	3791-81
MM4025	3788-30
MM4026	3788-31
MM4027	3788-36
N8T26	1341-8
N8T28	638-101
SN5489-1	3770-120
SN54LS322	605-130
SN54LS323	632-181
	3790-2
SN54LS378	616-10
SN54LS379	615-105
SN54LS384	605-17
SN54LS385	603-10
SN54LS388	615-88
SN54LS399	629-81
SN54S160	★ 1427
	610-68
SN54S161	★ 1427
	608-37
SN54S189	3770-129
SN54S289	3770-121
SN54S350	638-140
SN54S378	616-24
SN54S379	615-117
SN54S388	615-92
SN54S399	629-111
SN7489	3770-122
SN7489-1	3770-98
SN74LS322	605-131
SN74LS323	632-162
	3790-3
SN74LS378	616-11
SN74LS379	615-106
SN74LS384	605-18
SN74LS385	603-11
SN74LS388	615-89
SN74LS399	629-82
SN74S160	★ 1427
	610-69
SN74S161	★ 1427
	608-38
SN74S189	3770-107
SN74S289	3770-99
SN74S350	638-141
SN74S378	616-25
SN74S379	615-118
SN74S388	615-93
SN74S399	629-112
SSS1408A-7	2642-35
SSS1408A-8	2641-8
SSS1508A-8	2641-9
TMS3114	3791-85
iAPX186	★ 1430
	1348-141
	★ 1430
	1283-32
iAPX286	★ 1430
	1283-33
iAPX86/10	★ 1429
	1283-34
iAPX86/20	★ 1429
	1283-35
iAPX88/10	1283-16
iAPX88/20	1283-17

American Automation

Device	Page-Line
EZ-PRO	1809-7
EZ-PROII	★ 1902
	1809-8

American Microsystems, Inc.

Device	Page-Line
CMOS Library	★ 4624
	4476-3
	4476-4
	4476-5
GA1000	★ 4619
	4461-48
GA1000D	★ 4619
	★ 4619
	4462-1
GA1500	★ 4619
	4461-52
GA2000	★ 4619
	4461-54
GA2000D	★ 4619
	★ 4619
	4462-2
GA2500	★ 4619
	4461-55
GA3000D	★ 4619
	4462-3
GA4000D	★ 4619
	4462-4
GA500	★ 4619
	4463-16
GA5000D	★ 4619
	4462-5
NMOS Library	4476-6
S10110	3232-57
S10131	3167-62
S10430	3167-71
	¶ 302-11
S1602	2686-81
S23128	★ 3935
	587-173
S23128A	★ 3935
	3787-26
S23128B	★ 3935
	3787-6
S23256B	★ 3936
	3787-65
S23256C	★ 3936
	3787-47
S2333	★ 3932
	3784-106
S2350	2686-90
	1343-99
S2364A	★ 3934
	3786-50
S2364B	★ 3934
	3785-99
S2500A	3218-73
S25089	★ 3340
	3219-52
S2550A	★ 3344
	3218-74
S2559A	★ 3339
	3219-53
	¶ 299-17
S2559B	★ 3339
	3219-54
	¶ 299-17
S2559C	★ 3339
	3219-55
	¶ 299-17
S2559D	★ 3339
	3219-56
	¶ 299-17
S2559E	★ 3339
	3219-57
	¶ 299-17
S2559F	★ 3339
	3219-58
	¶ 299-17
S2559G	★ 3339
	3219-59
	¶ 299-17
S2559H	★ 3339
	3219-60
	¶ 299-17
S2560A	★ 3341
	3217-33
S25610	★ 3342
	3217-49
S25610E	★ 3342
	3217-50
S2561A	★ 3343
	3219-21
S2561C	★ 3343
	3219-22
S2562	3217-51
S2563	3217-52
S2567	3167-75
S2569	3219-97
S2569A	3219-98
S2600	3169-11
S2601	3169-12
S2602	3169-13
S2603	3169-14
S2604	3169-15
S2605	3169-16
S2688	3167-73
	3235-87
	¶ 302-15
S2709	3166-119
S2742	3169-17
	¶ 307-8
S2743	3169-18
	¶ 307-8
S2747	3169-19
S2748	3169-20
S2809	2661-76
S28211A	★ 3349
	3218-63
S28211B	★ 3349
	3218-64
S28214A	1351-116
	1355-14
S28215	3217-56
S28216	3217-63
S2859	3219-61
S2860	3219-62
S3501	3216-97
S3502	3216-98
S3503	3216-67
S3504	3216-68
S3506	★ 3348
	3216-58
S3507	★ 3348
	3216-88
S3522	★ 3345
	3218-7
S3525A	3216-8
	3216-35
S3525B	3216-9
	3216-36
S3526	★ 3346
	3219-49
S3526A	★ 3346
	3216-10
S3526B	★ 3346
	3216-11
S3528	★ 3347
	3217-76
S3610	★ 2813
	3169-109
S3620	★ 2814
	3169-110
S3630A	3787-27
S3630B	3786-112
S4003	★ 705
	3166-6
	3166-122
S4036	3173-32
S4264	587-174
	3786-1
S4521	★ 2810
	2664-15
	2680-50
S4534	★ 2811
	2663-142
	2680-48
S4535	★ 2812
	2664-16
	2680-51
S50240	3167-90
	¶ 302-11
S50241	3167-91
S50242	3167-92
S5101-8	3773-115
S5101L	588-21
	3773-105
S5101L-1	3773-78
S5101L-3	3773-106
S5101L1	3773-79
S5101L3	3773-107
S5101L8	3773-116
S6501-8	3773-117
S6501L	3773-108
S6501L-3	3773-109
S6501L-8	3773-118
S6501L1	3773-80
S6504	587-175
	3780-102
S6508	587-176
	3775-48
S6508-1	3775-23
S6508A	588-1
	3775-29
S6514	3776-100
S6516	588-2
	3778-49
S6551	★ 1449
	2685-1
S6551A	★ 1449
	2685-2
S6800	1342-88
	1267-4
S6801	★ 1450
	1342-28
	★ 1450
	1267-5
S6802	1342-56
	¶ 265-4
	¶ 271-10
	1267-6
	¶ 265-4
	¶ 271-10
S6803	1342-19
	1267-7
S6803N/R	1342-20
S68045	★ 1452
	1342-141
	¶ 265-5
S6805	★ 1451
	1342-29
	★ 1451
	1267-8
S6809	★ 1448
	1342-68
	★ 1448
	1267-9
S6809(E)	★ 1448
	1342-47
S6810	3771-125
S6810-1	3771-118
S68116	3783-108
S68132	3784-57
S68164	3785-49
S6821	1343-34
	1355-21
S68332	3785-4
S6840	1343-63
S6846	1343-82
	¶ 271-10
S6850	2685-3
	1342-113
	1354-116
S6852	1343-100
S6854	1342-102
S68A00	1342-89
S68A02	1342-57
	1267-10
S68A045	★ 1452
	1342-142
S68A09	★ 1448
	1342-69
	★ 1448
	1267-11
S68A09(E)	★ 1448
	1342-48
S68A10	3771-119
S68A21	1343-35
	1355-22
S68A316	3784-27
S68A332	3784-107
S68A364	★ 3933
	3786-39
S68A40	1343-64
S68A50	1342-114
	1354-117
S68A52	1343-101
S68A54	1342-103
S68B00	1342-90
S68B02	1342-58
S68B045	★ 1452
	1342-143
S68B09	★ 1448
	1342-70
	★ 1448
	1267-12
S68B09(E)	★ 1448
	1342-49
S68B10	3771-113
S68B21	1343-36
	1355-23
S68B316	3784-28
S68B364	★ 3933
	588-3
	★ 3933
	3785-82
S68B40	1343-65
S68B50	1342-115
	1354-118
S68B52	1343-102
S68B54	1342-104
S9508A	3785-40
S9900	★ 1453
	1349-119
	¶ 261-2
	¶ 262-13
	¶ 265-6
	¶ 274-12
	★ 1453
	1285-1
	¶ 261-2
	¶ 262-13
	¶ 265-6
	¶ 274-12
S9902	1349-132
S9980A	1267-13
S9981	1349-120
UA-1	★ 4619
	4468-5
UA-2	★ 4619
	4468-6
UA-3	★ 4619
	4468-7
UA-4	★ 4619
	4468-8
UA-5	★ 4619
	4468-9
UA-6	★ 4619
	4468-10

Analog Devices

Device	Page-Line
AD0042C	3202-53
AD101A	★ 3351
	3175-15
	3191-30
AD108	★ 3351
	3190-33
AD108A	★ 3351
	3186-19
AD111	3159-37
AD1403	★ 2842
	3236-88
AD1403A	★ 2842
	3236-89
AD1408-7	★ 2825
	2642-36

¶ Indicates page number in Application Note Directory.
★ Indicates additional data is provided on the page noted.

IC MASTER

Analog Devices (Cont'd)

Device	Page-Line
AD1408-8	★ 2825
	2641-10
AD1408-9	★ 2825
	2639-46
AD1508-8	★ 2825
	2641-11
AD1508-9	★ 2825
	2639-47
AD201A	★ 3351
	3191-31
AD2020	2635-37
AD208	★ 3351
	3190-34
AD208A	★ 3351
	3186-20
AD211	3159-38
AD2700J	★ 2842
	3237-29
AD2700L	★ 2842
	3237-30
AD2700S	★ 2842
	3237-31
AD2700U	★ 2842
	3237-32
AD2701J	3237-33
AD2701L	3237-34
AD2701S	3237-35
AD2701U	3237-36
AD2702L	3237-102
AD2702S	3237-103
AD2702U	3237-104
AD2710K	★ 2842
	3237-37
AD2710L	★ 2842
	3237-38
AD2712K	3237-105
AD2712L	3237-106
AD2720	★ 2842
	3237-107
AD2720A	★ 2842
	3237-39
AD2720C	★ 2842
	3237-40
AD2720S	★ 2842
	3237-41
AD2720T	★ 2842
	3237-42
AD27720B	3237-43
AD290T	2652-34
AD301A	★ 3351
	3199-47
AD301AL	★ 3351
	3186-65
AD308	★ 3351
	3199-29
AD308A	★ 3351
	3186-49
AD311	3160-25
AD351J	3160-21
AD351K	3160-22
AD351S	3160-23
AD3542J	3202-47
AD3554	★ 3353
	3176-59
	3180-136
AD3554A	★ 3353
	3175-95
	3189-26
AD3554B	★ 3353
	3188-7
AD3554D	★ 3353
	3175-96
AD3554S	★ 3353
	3175-97
	3176-60
	3180-137
	3188-9
AD362K	3233-40
AD362S	3233-41
AD363K	3233-6
AD363S	3233-7
AD364J	★ 2846
	3233-8
AD364K	★ 2846
	3233-9
AD364S	★ 2846
	3233-10
AD364T	★ 2846
	3233-11
AD370J	★ 2826
	2653-10
AD370K	★ 2826
	2653-11
AD370S	★ 2826
	2653-12
AD371J	★ 2826
	2653-13
AD371K	★ 2826
	2654-43
AD371S	★ 2826
	2654-44
AD380	★ 3353
	3176-6
	3176-85
AD380J	★ 3353
	3180-103
AD380K	★ 3353
	3180-104
	3188-26
AD380L	★ 3353
	3180-105
	3188-27
AD380S	★ 3353
	3176-7
	3176-86
	3180-106
	3188-28
AD381J	★ 3353
	3185-3
AD381K	★ 3353
	3185-43
AD381L	★ 3353
	3184-52
AD381S	★ 3353
	3187-54
AD381T	★ 3353
	3185-41
AD382	★ 3353
	3176-8
AD382J	★ 3353
	3188-2
AD382K	★ 3353
	3185-42
AD382S	★ 3353
	3176-9
	3189-53
AD382T	★ 3353
	3185-40
AD3860K	★ 2827
	2652-31
AD3860S	★ 2827
	2652-32
AD390J	★ 2816
	★ 2827
	2653-24
AD390K	★ 2816
	★ 2827
	2652-35
AD390S	★ 2816
	★ 2827
	2653-25
AD5010K	★ 2839
	2625-9
AD502J	3198-19
AD502K	3195-26
AD502L	3195-25
AD502S	3195-30
AD503J	★ 3351
	3203-13
AD503K	★ 3351
	3202-56
AD503S	★ 3351
	3202-57
AD504B	★ 3351
	2633-6
AD504J	★ 3351
	3192-3
AD504K	★ 3351
	3189-8
AD504L	★ 3351
	3187-13
AD504M	★ 3351
	3187-12
AD504S	★ 3351
	3187-14
AD506J	★ 3351
	3193-31
AD506K	★ 3351
	3189-3
AD506L	★ 3351
	3187-39
AD506S	★ 3351
	3189-4
AD507J	★ 3353
	3198-21
AD507K	★ 3353
	3193-11
AD507S	★ 3353
	3193-38
AD509J	★ 3353
	3176-97
	3201-17
AD509K	★ 3353
	3176-91
	3200-12
AD509S	★ 3353
	3176-92
	3200-13
AD510J	★ 3351
	3183-8
AD510K	★ 3351
	3182-10
AD510L	★ 3351
	3181-33
AD510S	★ 3351
	3182-11
AD512K	3193-20
AD512S	3193-22
AD514J	3203-16
AD514K	3202-43
AD514L	3202-40
AD514S	3202-44
AD515J	★ 3351
	3192-10
AD515K	★ 3351
	3187-34
AD515L	★ 3351
	3187-33
AD517J	★ 3351
	3183-57
AD517K	★ 3351
	3182-4
AD517L	★ 3351
	3181-19
AD517S	★ 3351
	3182-5
AD518J	★ 3353
	3199-12
AD518K	★ 3353
	3193-42
AD518S	★ 3353
	3193-43
AD5200	★ 2838
AD5201	2633-38
AD5201A	2634-43
AD5201B	2633-7
AD5201S	2634-44
AD5201T	2633-8
AD5202	2633-39
AD5202A	2634-45
AD5202B	2633-9
AD5202S	2634-46
AD5202T	2633-10
AD5203	2633-40
AD5204	2633-41
AD5204A	2634-47
AD5204S	2634-48
AD5204T	2633-11
AD5205	2633-42
AD5205A	2634-49
AD5205B	2633-12
AD5205S	2634-50
AD5205T	2633-13
AD5206	2633-43
AD5210	★ 2838
	2632-19
AD5211	★ 2838
	2632-20
AD5212	2632-21
AD5213	2632-22
AD5214	★ 2838
	2632-23
AD5215	2632-24
AD5216	2632-25
AD521J	3155-60
AD521K	3155-61
AD521L	3155-62
AD521S	3155-63
AD522A	3155-84
	3185-11
	¶ 292-7
AD522B	3155-85
	3184-19
	¶ 292-7
AD522S	3155-86
	3184-23
	¶ 292-7
AD523J	3203-12
AD523K	3202-39
AD523L	3202-38
AD5240K	★ 2839
	2630-41
AD5240S	★ 2839
	2630-42
AD524A	★ 3354
	3184-53
AD524B	★ 3354
	3183-4
AD524C	★ 3354
	3182-14
AD524S	★ 3354
	3183-12
AD528J	3192-17
AD528K	3187-48
AD528S	3187-49
AD530J	3235-48
	¶ 309-9
AD530K	3235-49
	¶ 309-9
AD530L	3235-50
	¶ 309-9
AD530S	3235-51
	¶ 309-9
AD531J	★ 3363
	3235-52
	¶ 309-9
AD531K	★ 3363
	3235-53
	¶ 309-9
AD531L	★ 3363
	3235-54
	¶ 309-9
AD531S	★ 3363
	3235-55
	¶ 309-9
AD532J	★ 3363
	3235-56
	¶ 309-9
AD532K	★ 3363
	3235-57
	¶ 309-9
AD532S	★ 3363
	3235-58
	¶ 309-9
AD533J	★ 3363
	3235-59
	¶ 309-9
AD533K	★ 3363
	3235-60
	¶ 309-9
AD533L	★ 3363
	3235-61
	¶ 309-9
AD533S	★ 3363
	3235-62
	¶ 309-9
AD534J	★ 3363
	3235-63
	¶ 309-9
AD534K	★ 3363
	3235-64
	¶ 309-9
AD534L	★ 3363
	3235-65
	¶ 309-9
AD534S	★ 3363
	3235-66
	¶ 309-9
AD534T	★ 3363
	3235-67
	¶ 309-9
AD535J	3233-66
AD535K	3233-67
AD536A	★ 3363
	3237-146
	¶ 309-9
AD536AJ	★ 3363
	3237-147
	¶ 309-9
AD536AK	★ 3363
	3237-148
	¶ 309-9
AD536AS	★ 3363
	3237-149
	¶ 309-9
AD537J	3239-20
	¶ 280-6
AD537K	3239-21
	¶ 280-6
AD537S	3239-22
	¶ 280-6
AD539J	★ 3362
	★ 3363
	3235-26
AD539K	★ 3362
	★ 3363
	3235-27
AD539S	★ 3362
	★ 3363
	3235-28
AD540J	★ 3351
	3203-17
AD540K	★ 3351
	3202-46
AD540S	★ 3351
	3202-48
AD542J	★ 3351
	3189-21
	¶ 294-14
AD542K	★ 3351
	3187-57
	¶ 294-14
AD542L	★ 3351
	3185-44
	¶ 294-14
AD542S	★ 3351
	3187-56
	¶ 294-14
AD544J	★ 3351
	3189-29
	¶ 294-14
AD544K	★ 3351
	3187-52
	¶ 294-14
AD544L	★ 3351
	3185-39
	¶ 294-14
AD544S	★ 3351
	3187-55
	¶ 294-14
AD545J	★ 3351
	3187-38
AD545K	★ 3351
	3187-37
AD545L	★ 3351
	3194-16
AD545M	★ 3351
	3184-38
AD547J	★ 3350
	★ 3351
	3188-1
AD547K	★ 3350
	★ 3351
	3185-37
AD547L	★ 3350
	★ 3351
	3184-47
AD547S	★ 3350
	★ 3351
	3185-38
AD558J	★ 2817
	★ 2825
	2641-40
	¶ 279-14
	¶ 283-4
AD558K	★ 2817
	★ 2825
	2639-49
	¶ 279-14
	¶ 283-4
AD558S	★ 2817
	★ 2825
	2642-19
	¶ 279-14
	¶ 283-4
AD558T	★ 2817
	★ 2825
	2640-1
	¶ 279-14
	¶ 283-4
AD561J	★ 2825
	2644-9
AD561K	★ 2825
	2643-43
AD561S	★ 2825
	2644-10
AD561T	★ 2825
	2643-44
AD562A/BCD	★ 2827
	★ 2829
	2652-12
AD562A/BIN	★ 2827
	★ 2829
	2652-13
AD562K/BCD	★ 2827
	★ 2829
	2657-11
AD562K/BIN	★ 2827
	★ 2829
	2651-30
AD562S/BCD	★ 2827
	★ 2829
	2657-12
AD562S/BIN	★ 2827
	★ 2829
	2648-31
AD563J	★ 2826
	2651-29
AD563J/BCD	★ 2826
	2657-13
AD563J/BIN	★ 2826
	2651-31
AD563K/BCD	★ 2826
	2657-14
AD563K/BIN	★ 2826
	2648-33
AD563S/BCD	★ 2826
	2657-15
AD563S/BIN	★ 2826
	2648-34
AD563T/BCD	★ 2826
	2657-16
AD563T/BIN	★ 2826
	2648-35
AD565AJ	★ 2826
	★ 2828
	2649-24
AD565AK	★ 2826
	★ 2828
	2648-1
AD565AS	★ 2826
	★ 2828
	2649-25
AD565AT	★ 2826
	★ 2828
	2648-2
AD565J	★ 2826
	★ 2828
	2650-16
AD565K	★ 2826
	★ 2828
	2648-18
AD565S	★ 2826
	★ 2828
	2650-17
AD565T	★ 2826
	★ 2828
	2648-19
AD566AJ	★ 2827
	★ 2829
	2650-6
AD566AK	★ 2827
	★ 2829
	2648-10
AD566AS	★ 2827
	★ 2829
	2650-7
AD566AT	★ 2827
	★ 2829
	2648-11
AD566J	★ 2827
	★ 2829
	2650-8
AD566K	★ 2827
	★ 2829
	2648-12
AD566S	★ 2827
	★ 2829
	2650-9
AD566T	★ 2827
	★ 2829
	2648-13
AD567J	★ 2827
	2650-34
AD567K	★ 2827
	2648-28

Arranged alphanumerically from left to right.

© IC MASTER 1984

Analog Devices (Cont'd)

Device	Page-Line
AD567S	★ 2827
	2650-35
AD570J	★ 2838
	2627-7
AD570S	★ 2838
	2627-8
AD571J	2630-2
AD571K	2629-43
AD571S	2630-3
AD572A	★ 2838
	2632-37
AD572B	★ 2838
	2632-38
AD572S	★ 2838
	2632-39
AD573J	★ 2832
	★ 2838
	2630-1
AD573K	★ 2832
	★ 2838
	2629-31
AD573S	★ 2832
	★ 2838
	2629-32
AD574AJ	★ 2833
	★ 2838
	2634-33
AD574AK	★ 2833
	★ 2838
	2632-33
AD574AS	★ 2833
	★ 2838
	2634-34
AD574AT	★ 2833
	★ 2838
	2632-42
AD574J	★ 2833
	★ 2838
	2634-37
AD574K	★ 2833
	★ 2838
	2632-43
AD574L	★ 2833
	★ 2838
	2632-44
AD574S	★ 2833
	★ 2838
	2632-45
AD574T	★ 2833
	★ 2838
	2632-46
AD574U	★ 2833
	★ 2838
	2632-47
AD574ZJ	★ 2833
	★ 2838
	2634-39
AD574ZK	★ 2833
	★ 2838
	2634-40
AD574ZL	★ 2833
	★ 2838
	2632-53
AD574ZS	★ 2833
	★ 2838
	2632-54
AD574ZT	★ 2833
	★ 2838
	2632-55
AD574ZU	★ 2833
	★ 2838
	2633-1
AD578J	★ 2839
	2630-46
AD578K	★ 2839
	2630-39
AD578L	★ 2839
	2630-33
AD578S	★ 2839
	2630-47
AD578T	★ 2839
	2630-40
AD579B	★ 2839
	2629-14
AD579J	★ 2839
	2629-17
AD579K	★ 2839
	2629-15
AD579T	★ 2839
	2629-16
AD580J	★ 2842
	3236-90
AD580K	★ 2842
	3236-91
AD580L	★ 2842
	3236-92
AD580S	★ 2842
	3236-93
AD580T	★ 2842
	3236-94
AD580U	★ 2842
	3236-95
AD581J	★ 2842
	3237-44
AD581K	★ 2842
	3237-45
AD581L	★ 2842
	3237-46
AD581S	★ 2842
	3237-47
AD581T	★ 2842
	3237-48
AD581U	★ 2842
	3237-49
AD582K	★ 2847
	3237-161
AD582S	★ 2847
	3237-162
AD583K	★ 2847
	3237-163
AD583S	★ 2847
	3237-164
AD584	★ 2842
	3236-96
	3236-137
	3237-24
	3237-50
AD584J	★ 2842
	3236-130
AD584K	★ 2842
	3236-131
AD584L	★ 2842
	3236-132
AD584S	★ 2842
	3236-133
AD584T	★ 2842
	3236-134
AD584U	★ 2842
	3236-135
AD585J	★ 2842
	★ 2847
	3237-165
AD585S	★ 2842
	★ 2847
	3237-166
AD589J	★ 2842
	3236-68
	¶ 314-2
AD589K	★ 2842
	3236-69
	¶ 314-2
AD589L	★ 2842
	3236-70
	¶ 314-2
AD589M	★ 2842
	3236-71
	¶ 314-2
AD589S	★ 2842
	3236-72
	¶ 314-2
AD589T	★ 2842
	3236-73
	¶ 314-2
AD589U	★ 2842
	3236-74
	¶ 314-2
AD590I	3238-119
AD590J	3238-120
AD590K	3238-121
AD590L	3238-122
AD590M	3238-123
AD594A	★ 3356
	3156-71
AD594C	★ 3356
	3156-72
AD595A	★ 3356
	3156-73
AD595C	★ 3356
	3156-74
AD6020K	★ 2839
	2625-10
AD624A	★ 3355
	3155-103
	3184-54
AD624B	★ 3355
	3155-104
	3183-11
AD624C	★ 3355
	3155-105
	3182-15
AD624S	★ 3355
	3155-106
	3183-37
AD630	★ 3361
	3232-75
AD636J	★ 3359
	★ 3363
	3237-150
AD636K	★ 3359
	★ 3363
	3237-151
AD637J	★ 3360
	★ 3363
	3237-152
AD637K	★ 3360
	★ 3363
	3237-153
AD642J	★ 3351
	3205-9
AD642K	★ 3351
	3204-43
AD642L	★ 3351
	3204-9
AD642S	★ 3351
	3204-44
AD644J	★ 3351
	3205-10
AD644K	★ 3351
	3204-45
AD644L	★ 3351
	3204-8
AD644S	★ 3351
	3204-10
AD647J	★ 3350
	★ 3351
	3204-48
AD647K	★ 3350
	★ 3351
	3204-5
AD647L	★ 3350
	★ 3351
	3203-53
AD647S	★ 3350
	★ 3351
	3204-6
AD647S/883B	★ 3350
	★ 3351
	3204-7
AD650	★ 2840
	3239-23
AD650J	★ 2840
	3239-48
AD650K	★ 2840
	3239-49
AD650S	★ 2840
	3239-50
AD667J	★ 2818
	★ 2827
	2648-46
AD667K	★ 2818
	★ 2827
	2647-49
AD667S	★ 2818
	★ 2827
	2648-47
AD673J	★ 2838
	2627-2
AD673S	★ 2838
	2627-3
AD7110K	★ 2827
	★ 2829
	3164-23
AD7111K	★ 2827
	3164-17
AD7111L	★ 2827
	3164-18
AD7111T	★ 2827
	3164-19
AD7111U	★ 2827
	3164-20
AD7115K	★ 2827
	3164-16
AD7118K	★ 2827
	★ 2829
	3164-24
AD7118L	★ 2827
	★ 2829
	3164-25
AD7118T	★ 2827
	★ 2829
	3164-21
AD7118U	★ 2827
	★ 2829
	3164-22
AD7240J	★ 2820
	★ 2825
	2655-12
AD7240K	★ 2820
	★ 2825
	2654-45
AD7240S	★ 2820
	★ 2825
	2655-13
AD7240T	★ 2820
	★ 2825
	2654-46
AD741	★ 3351
	3175-25
	3196-48
AD741C	★ 3351
	3198-41
AD741J	★ 3351
	3193-21
AD741K	★ 3351
	3191-45
AD741L	★ 3351
	3187-7
AD741S	★ 3351
	3191-29
AD7501J	★ 2841
	2623-56
	¶ 290-9
AD7501K	★ 2841
	2623-57
	¶ 290-9
AD7501S	★ 2841
	2623-58
	¶ 290-9
AD7502J	★ 2841
	2622-98
AD7502K	★ 2841
	2622-99
AD7502S	★ 2841
	2622-100
AD7503J	★ 2841
	2623-59
	¶ 290-9
AD7503K	★ 2841
	2623-60
	¶ 290-9
AD7503S	★ 2841
	2623-61
	¶ 290-9
AD7506J	★ 2841
	2624-64
	¶ 290-9
AD7506K	★ 2841
	2624-65
	¶ 290-9
AD7506S	★ 2841
	2624-58
	¶ 290-9
AD7506T	★ 2841
	2624-59
	¶ 290-9
AD7507J	★ 2841
	2624-14
	¶ 290-9
AD7507K	★ 2841
	2624-15
	¶ 290-9
AD7507S	★ 2841
	2624-7
	¶ 290-9
AD7507T	★ 2841
	2624-8
	¶ 290-9
AD7510DIJ	2616-111
	¶ 290-9
AD7510DIK	2616-112
	¶ 290-9
AD7510DIS	2616-113
	¶ 290-9
AD7511DIJ	2616-114
	¶ 290-9
AD7511DIK	2616-115
	¶ 290-9
AD7511DIS	2616-116
	¶ 290-9
AD7511DIT	2616-117
	¶ 290-9
AD7512DIJ	2619-2
AD7512DIK	2619-3
AD7512DIS	2619-4
AD7512DIT	2619-5
AD7519J	2619-81
	¶ 290-9
AD7520J	★ 2825
	2646-34
	¶ 280-15
	¶ 284-15
AD7520K	★ 2825
	2645-54
	¶ 280-15
	¶ 284-15
AD7520L	★ 2825
	2644-23
	¶ 280-15
	¶ 284-15
AD7520S	★ 2825
	2646-35
	¶ 280-15
	¶ 284-15
AD7520T	★ 2825
	2646-1
	¶ 280-15
	¶ 284-15
AD7520U	★ 2825
	2644-24
	¶ 280-15
	¶ 284-15
AD7521J	★ 2825
	2656-16
	¶ 280-15
	¶ 284-15
AD7521K	★ 2825
	2656-3
	¶ 280-15
	¶ 284-15
AD7521L	★ 2825
	2655-28
	¶ 280-15
	¶ 284-15
AD7521S	★ 2825
	2656-17
	¶ 280-15
	¶ 284-15
AD7521T	★ 2825
	2656-4
	¶ 280-15
	¶ 284-15
AD7521U	★ 2825
	2655-29
	¶ 280-15
	¶ 284-15
AD7522J	★ 2825
	2646-47
	¶ 280-15
	¶ 284-15
AD7522K	★ 2825
	2646-13
	¶ 280-15
	¶ 284-15
AD7522L	★ 2825
	2644-36
	¶ 280-15
	¶ 284-15
AD7522S	★ 2825
	2646-48
	¶ 280-15
	¶ 284-15
AD7522T	★ 2825
	2646-14
	¶ 280-15
	¶ 284-15
AD7522U	★ 2825
	2644-37
	¶ 280-15
	¶ 284-15
AD7523J	★ 2825
	2640-28
	¶ 280-15
AD7523K	★ 2825
	2639-26
	¶ 280-15
AD7523L	★ 2825
	2638-41
	¶ 280-15
AD7523S	★ 2825
	2640-29
	¶ 280-15
AD7524A	★ 2825
	2640-43
	¶ 280-15
	¶ 284-15
AD7524B	★ 2825
	2639-31
	¶ 280-15
	¶ 284-15
AD7524C	★ 2825
	2638-46
	¶ 280-15
	¶ 284-15
AD7524J	★ 2825
	2640-44
	¶ 280-15
	¶ 284-15
AD7524K	★ 2825
	2639-32
	¶ 280-15
	¶ 284-15
AD7524L	★ 2825
	2638-47
	¶ 280-15
	¶ 284-15
AD7524S	★ 2825
	2640-45
	¶ 280-15
	¶ 284-15
AD7524T	★ 2825
	2639-33
	¶ 280-15
	¶ 284-15
AD7524U	★ 2825
	2638-48
	¶ 280-15
	¶ 284-15
AD7525K	★ 2827
	★ 2829
	3232-66
	3235-132
	¶ 284-15
AD7525L	★ 2827
	★ 2829
	3235-133
	¶ 284-15
AD7525T	★ 2827
	★ 2829
	3232-67
	3235-134
	¶ 284-15
AD7525U	★ 2827
	★ 2829
	3235-135
	¶ 284-15
AD7527B	★ 2825
	2645-46
	¶ 282-14
	¶ 282-15
AD7527C	★ 2825
	2644-11
	¶ 282-14
	¶ 282-15
AD7527GC	★ 2825
	2644-12
	¶ 282-14
	¶ 282-15
AD7527GL	★ 2825
	2644-13
	¶ 282-14
	¶ 282-15
AD7527GU	★ 2825
	2644-14
	¶ 282-14
	¶ 282-15
AD7527K	★ 2825
	2645-47
	¶ 282-14
	¶ 282-15
AD7527L	★ 2825
	2644-15
	¶ 282-14
	¶ 282-15

¶ Indicates page number in Application Note Directory.
★ Indicates additional data is provided on the page noted.

IC MASTER

Analog Devices (Cont'd)

Device	Page-Line
AD7527T	★ 2825
	2645-48
	¶ 282-14
	¶ 282-15
AD7527U	★ 2825
	2644-16
	¶ 282-14
	¶ 282-15
AD7528J	★ 2819
	★ 2825
	2642-33
AD7528K	★ 2819
	★ 2825
	2641-2
AD7528L	★ 2819
	★ 2825
	2641-3
AD7528S	★ 2819
	★ 2825
	2642-34
AD7528T	★ 2819
	★ 2825
	2641-4
AD7528U	★ 2819
	★ 2825
	2641-5
AD7530J	★ 2825
	2646-36
	¶ 280-15
	¶ 284-15
AD7530K	★ 2825
	2646-2
	¶ 280-15
	¶ 284-15
AD7530L	★ 2825
	2644-25
	¶ 280-15
	¶ 284-15
AD7531J	★ 2825
	2656-18
	¶ 280-15
	¶ 284-15
AD7531K	★ 2825
	2656-5
	¶ 280-15
	¶ 284-15
AD7533A	★ 2825
	2646-51
	¶ 280-15
	¶ 284-15
AD7533B	★ 2825
	2646-17
	¶ 280-15
	¶ 284-15
AD7533C	★ 2825
	2644-40
	¶ 280-15
	¶ 284-15
AD7533J	★ 2825
	2646-52
	¶ 280-15
	¶ 284-15
AD7533K	★ 2825
	2646-18
	¶ 280-15
	¶ 284-15
AD7533L	★ 2825
	2644-41
	¶ 280-15
	¶ 284-15
AD7533S	★ 2825
	2646-53
	¶ 280-15
	¶ 284-15
AD7533T	★ 2825
	2646-19
	¶ 280-15
	¶ 284-15
AD7533U	★ 2825
	2644-42
	¶ 280-15
	¶ 284-15
AD7541A	★ 2825
	★ 2827
	★ 3351
	2653-36
	¶ 284-15
AD7541B	★ 2825
	★ 2827
	★ 3351
	2650-45
	¶ 284-15
AD7541J	★ 2825
	★ 2827
	★ 3351
	2653-37
	¶ 284-15
AD7541K	★ 2825
	★ 2827
	★ 3351
	2650-46
	¶ 284-15
AD7541S	★ 2825
	★ 2827
	★ 3351
	2654-9
	¶ 284-15
AD7541T	★ 2825
	★ 2827
	★ 3351
	2650-47
	¶ 284-15
AD7542A	★ 2827
	2654-27
	¶ 282-14
	¶ 282-15
AD7542B	★ 2827
	2651-35
	¶ 282-14
	¶ 282-15
AD7542J	★ 2827
	2654-28
	¶ 282-14
	¶ 282-15
AD7542K	★ 2827
	2651-36
	¶ 282-14
	¶ 282-15
AD7542S	★ 2827
	2654-29
	¶ 282-14
	¶ 282-15
AD7542T	★ 2827
	2651-37
	¶ 282-14
	¶ 282-15
AD7543A	★ 2827
	2654-30
AD7543B	★ 2827
	2651-38
AD7543J	★ 2827
	2654-31
AD7543K	★ 2827
	2651-39
AD7544A	★ 2827
	2653-30
	¶ 283-8
AD7544B	★ 2827
	2649-16
	¶ 283-8
AD7544BG	★ 2827
	2649-17
	¶ 283-8
AD7544GK	★ 2827
	2649-18
	¶ 283-8
AD7544GT	★ 2827
	2649-19
	¶ 283-8
AD7544J	★ 2827
	2653-31
	¶ 283-8
AD7544K	★ 2827
	2649-20
	¶ 283-8
AD7544S	★ 2827
	2653-32
	¶ 283-8
AD7544T	★ 2827
	2649-21
	¶ 283-8
AD7545A	★ 2821
	★ 2827
	★ 2827
	2655-14
AD7545B	★ 2821
	★ 2827
	★ 2827
	2653-26
AD7545C	★ 2821
	★ 2827
	★ 2827
	2648-37
AD7545GC	★ 2821
	★ 2827
	★ 2827
	2648-38
AD7545GL	★ 2821
	★ 2827
	★ 2827
	2648-39
AD7545GU	★ 2821
	★ 2827
	★ 2827
	2648-40
AD7545J	★ 2821
	★ 2827
	★ 2827
	2655-15
AD7545K	★ 2821
	★ 2827
	★ 2827
	2653-27
AD7545L	★ 2821
	★ 2827
	★ 2827
	2648-41
AD7545S	★ 2821
	★ 2827
	★ 2827
	2655-16
AD7545T	★ 2821
	★ 2827
	★ 2827
	2653-28
AD7545U	★ 2821
	★ 2827
	★ 2827
	2648-42
AD7546A	★ 2827
	★ 2829
	2658-25
AD7546B	★ 2827
	★ 2829
	2658-15
AD7546J	★ 2827
	★ 2829
	2658-26
AD7546K	★ 2827
	★ 2829
	2658-16
AD7548J	★ 2822
	★ 2827
	2642-20
AD7548K	★ 2822
	★ 2827
	2640-2
AD7548S	★ 2822
	★ 2827
	2642-21
AD7548T	★ 2822
	★ 2827
	2640-3
AD7550B	★ 2838
	2635-41
AD7552	★ 2838
	2635-18
AD7555	★ 2838
	3232-30
AD7570J	2627-4
AD7570L	2629-48
AD7571J	★ 2834
	★ 2838
	2630-14
AD7571K	★ 2834
	★ 2838
	2630-12
AD7571S	★ 2834
	★ 2838
	2630-15
AD7571T	★ 2834
	★ 2838
	2630-13
AD7573J	★ 2835
	★ 2838
	2630-8
AD7573K	★ 2835
	★ 2838
	2629-46
AD7573S	★ 2835
	★ 2838
	2630-9
AD7573T	★ 2835
	★ 2838
	2629-47
AD7574A	★ 2838
	2627-47
AD7574B	★ 2838
	2626-48
AD7574J	★ 2838
	2627-48
AD7574K	★ 2838
	2626-49
AD7574S	★ 2838
	2627-49
AD7574T	★ 2838
	2626-50
AD7581A	★ 2838
	3233-18
	★ 2838
	1345-101
	1346-112
	1348-71
AD7581B	★ 2838
	3233-19
	★ 2838
	1345-102
	1346-113
	1348-72
AD7581C	★ 2838
	3233-20
	★ 2838
	1345-103
	1346-114
	1348-73
AD7581J	★ 2838
	3233-21
	★ 2838
	1345-104
	1346-115
	1348-74
AD7581K	★ 2838
	2628-1
	★ 2838
	3233-22
	★ 2838
	1345-105
	1346-116
	1348-75
AD7581L	★ 2838
	3233-23
	★ 2838
	1345-106
	1346-117
	1348-76
AD7583K	2628-38
AD7590DIB	2616-103
AD7590DIK	2616-104
AD7591DIB	2616-105
AD7591DIK	2616-106
AD7592DIB	2615-82
AD7592DIK	2615-83
AD8581B	1348-77
AD8581L	2627-12
AD9685	★ 3357
	3159-63
AD9687	★ 3357
	3159-64
AD9768	★ 2823
	★ 2830
	2638-40
ADADC71J	★ 2836
	★ 2838
	2636-34
ADADC71K	★ 2836
	★ 2838
	2636-25
ADADC72J	★ 2836
	★ 2838
	2636-35
ADADC72K	★ 2836
	★ 2838
	2636-26
ADADC80-12	★ 2838
	2632-35
ADADC80-15	★ 2838
	2629-41
ADADC80Z-10	★ 2838
	2629-42
ADADC80Z-12	★ 2838
	2632-36
ADADC84-10	★ 2839
	2629-27
ADADC84-12	★ 2839
	2631-15
ADADC85-10	★ 2839
	2629-29
ADADC85-12	★ 2839
	2631-18
ADDAC08	★ 2825
	2640-20
ADDAC08A	★ 2825
	2639-14
ADDAC08C	★ 2825
	2642-26
ADDAC08E	★ 2825
	2640-35
ADDAC08H	★ 2825
	2639-15
ADDAC100J	★ 2825
	2645-50
ADDAC100K	★ 2825
	2645-35
ADDAC100L	★ 2825
	2645-36
ADDAC100S	★ 2825
	2645-51
ADDAC100T	★ 2825
	2645-37
ADDAC71-COB-I	★ 2827
	★ 2829
	2658-42
ADDAC71-COB-V	★ 2827
	★ 2829
	2659-5
ADDAC71-CSB-I	★ 2827
	★ 2829
	2658-43
ADDAC71-CSB-V	★ 2827
	★ 2829
	2659-6
ADDAC72-COB-I	★ 2827
	★ 2829
	2658-44
ADDAC72-COB-V	★ 2827
	★ 2829
	2659-7
ADDAC72-CSB-I	★ 2827
	★ 2829
	2658-45
ADDAC72-CSB-V	★ 2827
	★ 2829
	2659-8
ADDAC80/CBI	★ 2825
	2649-53
	¶ 279-11
ADDAC80/CCD	★ 2825
	2656-39
	¶ 279-11
ADDAC85/CBI	★ 2825
	2650-1
	¶ 279-12
ADDAC85/CCD	★ 2825
	2656-40
	¶ 279-12
ADDAC85C/CBI	★ 2825
	2650-2
	¶ 279-12
ADDAC85C/CCD	★ 2825
	2656-41
	¶ 279-12
ADDAC87/CBI	★ 2826
	2649-51
ADG200A	2615-57
ADG200B	2615-73
ADG200C	2615-74
ADG201A	2616-101
ADG201B	2616-118
ADG201C	2616-119
ADLH0032	★ 3353
	3176-66
	3180-130
	3195-12
ADLH0032C	★ 3353
	3176-67
	3180-131
	3202-22
ADLH0033	★ 3353
	3174-2
	3176-55
ADLH0033C	★ 3353
	3174-6
	3176-57
ADOP-07	★ 3351
	3182-40
ADOP-07A	★ 3351
	3181-22
ADOP-07C	★ 3351
	3184-3
ADOP-07D	★ 3351
	3184-8
ADOP-07E	★ 3351
	3182-51
ADSHC-85	★ 2847
	3237-167
ADSHC-85E	3237-168
ADSP-1008J	★ 707
	571-167
ADSP-1008K	★ 707
	571-168
ADSP-1008S	★ 707
	571-169
ADSP-1008T	★ 707
	571-170
ADSP-1009J	★ 707
	572-14
ADSP-1009K	★ 707
	572-15
ADSP-1009S	★ 707
	572-16
ADSP-1009T	★ 707
	572-17
ADSP-1010J	★ 707
	571-172
ADSP-1010K	★ 707
	571-173
ADSP-1010S	★ 707
	571-174
ADSP-1010T	★ 707
	571-175
ADSP-1012J	★ 706
	572-18
ADSP-1012K	★ 706
	572-19
ADSP-1012S	★ 706
	572-20
ADSP-1012T	★ 706
	572-21
ADSP-1016J	571-159
ADSP-1016K	571-160
ADSP-1016S	571-161
ADSP-1016T	571-162
ADSP-1080J	★ 706
	571-154
ADSP-1080K	★ 706
	571-155
ADSP-1080S	★ 706
	571-156
ADSP-1080T	★ 706
	571-157
ADSP-1081J	★ 706
	572-10
ADSP-1081K	★ 706
	572-11
ADSP-1081S	★ 706
	572-12
ADSP-1081T	★ 706
	572-13
ADSP-1110K	★ 707
	571-176
ADSP-1110T	★ 707
	571-177
ADVFG32	3239-24
ADX346	3237-169
DRC1765	3237-144
DRC1766	3237-145
HAS-0802	★ 2839
	2626-7
HAS-1002	★ 2839
	2629-11
HAS-1202	★ 2839
	2630-32
HAS-1409	★ 2837
	2635-50
HDD-0810	2643-3
HDD-0810C	2643-5
HDD-0810CM	2643-6
HDD-0810M	2643-4
HDD-1015	2647-37
HDD-1015C	2647-38
HDD-1015M	2647-39
HDD-1206J	★ 2830
	2651-43
HDD-1206S	★ 2830
	2651-44

Arranged alphanumerically from left to right.

© IC MASTER 1984

Analog Devices (Cont'd)

Device	Page-Line
HDD-1409	★ 2823
	2657-40
HDG-0405	★ 2830
	2638-6
HDG-0605	★ 2830
	2638-34
HDG-0805	★ 2830
	2643-7
HDH-0802	★ 2830
	2639-42
HDH-0802M	★ 2830
	2639-43
HDH-1003	★ 2830
	2643-45
HDH-1003M	★ 2830
	2645-34
HDH-1205	★ 2830
	2650-38
HDH-1205M	★ 2830
	2650-39
HDS-060	3203-9
HDS-0810E	★ 2830
	2639-5
HDS-0810EM	★ 2830
	2639-6
HDS-0820	★ 2830
	2639-52
HDS-0820M	★ 2830
	2639-53
HDS-1015E	★ 2830
	2645-25
HDS-1015EM	★ 2830
	2645-26
HDS-1025	★ 2830
	2643-41
HDS-1025M	★ 2830
	2643-42
HDS-1240E	★ 2830
	2653-20
HDS-1240EM	★ 2830
	2653-21
HDS-1250	★ 2830
	2648-49
HDS-1250M	★ 2830
	2648-50
HOS-050	3176-74
	3180-145
HOS-050A	3176-75
HOS-050C	3176-76
	3180-146
HOS-060	★ 3353
	3188-34
HOS-060/883	★ 3353
	3188-35
HOS-060S	★ 3353
	3175-98
	3176-77
	3180-147
HOS-100A	★ 3353
	3174-43
	3176-58
HOS-100AH	★ 3353
	3155-27
HOS-100S	★ 3353
	3174-44
	3176-56
HOS-199SH	3155-28
HTC-0300	★ 2847
	3237-170
HTC-0500	★ 2845
	★ 2847
	3237-171
HTS-0010	★ 2842
	★ 2847
	3236-156
HTS-0025	★ 2847
	3237-172
MAH-0801	★ 2839
	2625-8
MAH-1001	★ 2839
	2625-28
MAS-1202	★ 2839
	2629-1
SDC1740	3237-115
SDC1741	3237-116
SDC1742	3237-117

Barvon Research

Device	Page-Line
BC210	4460-45
BC225	4460-46
BC3G01	4473-4
BC3G02	4473-3
BC405	★ 4626
	4464-9
	4466-13
BC410	★ 4626
	4464-10
	4466-14
BC415	★ 4626
	4464-11
	4466-15
BC420	★ 4626
	4464-12
	4466-16
BC505	★ 4626
	4466-51
	4467-9
BC510	★ 4626
	4466-53
BC515	★ 4626
	4466-55
	4467-11
BC520	★ 4626
	4467-1
	4467-10
	4467-12
BHC	★ 4525
	4476-17
BHC Library	4476-9
BHN Library	4476-10

Burr-Brown Research Corporation

Device	Page-Line
3271	★ 2850
3291	★ 2850
	3182-60
3329	★ 2850
	3155-13
	3175-99
3354	★ 2850
3430	★ 2850
3431	★ 2850
3450	★ 2851
3451	★ 2851
3452	★ 2851
3455	★ 2851
3456	★ 2851
	3155-114
3500A	★ 2850
	★ 2853
	3196-1
	¶ 294-3
3500B	★ 2850
	★ 2853
	3190-58
	¶ 294-3
3500C	★ 2850
	★ 2853
	3188-43
	¶ 294-3
3500E	★ 2850
	★ 2853
	3187-8
	¶ 294-3
3500MP	★ 2850
	★ 2853
	3205-23
	¶ 294-3
3500R	★ 2850
	★ 2853
	3196-2
	¶ 294-3
3500R/MIL	★ 2850
	★ 2853
	3196-3
	¶ 294-3
3500S	★ 2850
	★ 2853
	3190-59
	¶ 294-3
3500T	★ 2850
	★ 2853
	3188-44
	¶ 294-3
3500U/883B	★ 2850
	★ 2853
	3196-4
	¶ 294-3
3501A	★ 2850
	3195-36
3501B	★ 2850
	3190-52
3501C	★ 2850
	3190-51
3501R	★ 2850
	3195-37
3501S	★ 2850
	3190-53
3503A	3203-14
3503B	3202-41
3503R	3203-15
3503S	3202-42
3507J	★ 2851
	3176-98
	3201-23
3508J	★ 2851
	3195-60
3510A	★ 2850
	★ 2853
	3184-12
3510B	★ 2850
	★ 2853
	3183-40
3510C	★ 2850
	★ 2853
	3182-21
3510S	★ 2850
	★ 2853
	3183-41
3510V	★ 2850
	★ 2853
	3183-42
3521H	★ 2850
	3185-36
	¶ 294-2
3521J	★ 2850
	3184-45
	¶ 294-2
3521K	★ 2850
	3184-44
	¶ 294-2
3521L	★ 2850
	3184-41
	¶ 294-2
3521R	★ 2850
	3184-46
	¶ 294-2
3522J	★ 2850
	3187-44
3522K	★ 2850
	3185-29
3522L	★ 2850
	3194-17
3522S	★ 2850
	3185-30
3523J	3187-36
3523K	3185-16
3523L	3185-14
3527A	★ 2850
	3185-28
3527B	★ 2850
	3184-40
3527C	★ 2850
	3185-27
3528A	★ 2850
	3185-17
3528B	★ 2850
	3184-30
3528C	★ 2850
	3185-12
3542J	★ 2850
	3202-49
3542S	★ 2850
	3202-50
3550J	★ 2851
	3176-101
	3187-45
3550K	★ 2851
	3176-93
	3187-47
3550S	★ 2851
	3176-102
	3187-46
3551J	★ 2851
	3176-81
	(Continued)
3551J	3180-110
	3188-12
3551S	★ 2851
	3176-82
	3180-111
	3188-13
3553	★ 2850
	★ 2851
	3155-17
	3174-11
	3175-89
3554	★ 2851
	3176-61
3554A	★ 2851
	3175-100
	3180-125
	3189-58
3554B	★ 2851
	3175-101
	3180-126
	3188-6
3554S	★ 2851
	3175-102
	3180-127
	3188-8
3571A	★ 2850
	3175-82
	3176-117
	3190-12
3572A	★ 2850
	3175-67
	3176-118
	3190-13
3573	★ 2850
	3175-75
	3201-10
3580J	★ 2850
	3176-5
	3176-134
	3200-30
3581J	3176-21
	3176-110
	3192-14
3582J	3176-42
	3176-107
	3192-13
3583	★ 2850
	3176-1
	3176-43
	3176-108
	3192-15
3584	★ 2850
	3176-44
	3176-109
	3192-16
3606	★ 2851
	3156-38
3626A	3155-64
3626B	3155-65
3626C	3155-66
3627	★ 2851
	3155-107
3629	★ 2851
	3155-67
3629A	★ 2851
	3181-39
3629B	★ 2851
	3181-36
3629C	★ 2851
	3181-37
3629S	★ 2851
	3181-38
3630A	★ 2851
	3155-68
3630B	★ 2851
	3155-69
3630C	★ 2851
	3155-70
3630S	★ 2851
	3155-71
3636	★ 2851
3650HG	★ 2852
	3155-111
3652HG	★ 2852
	3155-112
3656AG	★ 2851
	3155-115
3660	★ 2851
	¶ 292-10
3662	★ 2851
3712T/R	3233-73
3713T/R	3233-74
3714T	3233-75
	¶ 286-6
4003	★ 2852
4023	★ 2852
	3235-93
4025	★ 2852
	3235-94
4082/03	★ 2852
	3232-100
4085	★ 2852
	3235-120
4085M	★ 2852
	3235-121
4104	★ 2852
4115/04	★ 2852
	3232-102
4127	★ 2852
	3155-128
4131	3238-151
4203	★ 2852
	3235-68
4203S	★ 2852
	3235-69
4204	★ 2852
	3235-70
4204S	★ 2852
	3235-71
4205	★ 2852
	3235-72
4205S	★ 2852
	3235-73
4206	★ 2852
	3235-74
4213	★ 2852
	★ 2853
	3235-75
4213S	★ 2852
	★ 2853
	3235-76
4213U	★ 2852
	★ 2853
	3235-77
4213V	★ 2852
	★ 2853
	3235-78
4213W	★ 2852
	★ 2853
	3235-79
4214	★ 2852
	3235-80
4214M	★ 2852
	3235-81
4301	★ 2852
	3235-24
	¶ 309-6
4302	★ 2852
	3235-25
4340	★ 2852
	3237-154
4341	★ 2852
	3237-155
4423	★ 2852
	3235-95
722	3233-60
724	3233-61
8300201XC	★ 2853
ADC10HT	★ 2848
	2633-20
	¶ 279-10
ADC10HT-1	★ 2848
	2633-21
ADC60-12	★ 2848
	2630-36
ADC71J	★ 2848
	2636-46
ADC71K	★ 2848
	2636-36
ADC72A	★ 2848
	2636-43
ADC72B	★ 2848
	2636-37
ADC72J	★ 2848
	2636-44
ADC72K	★ 2848
	2636-45
ADC731J	★ 2848
	2636-28
ADC731K	★ 2848
	2636-22
ADC73J	★ 2848
	2636-29
ADC73K	★ 2848
	2636-23
ADC76J	★ 2848
	2636-41
ADC76K	★ 2848
	2636-31
ADC803B	★ 2848
	2630-24
ADC803C	★ 2848
	2634-19
ADC80A-10	★ 2848
	2635-17
ADC80A-12	★ 2848
	2632-41
ADC82A	★ 2848
	2636-19
ADC83A	2626-33
ADC84K-10	★ 2848
	2629-28
ADC84K-12	★ 2848
	2631-16
ADC85-10	★ 2848
	2629-30
ADC85-12	★ 2848
	2631-19
ADC87/MIL	★ 2853
	2630-51
ADC87U	★ 2853
	2630-52
ATF76	★ 2852
	3232-9
CS-450	1809-11
CS460	1809-12
DAC10HT	★ 2848
	2649-22
DAC10HT-1	★ 2848
	2649-23
DAC60	★ 2848
DAC63	★ 2848
	2648-48
	¶ 281-1
DAC63S	★ 2848
	2649-1
	¶ 281-1
DAC70-CCD-I	★ 2848
	2659-34
DAC70-COB-I	★ 2848
	2659-21
DAC70-CSB-I	★ 2848
	2659-19
DAC700B	★ 2848
	2658-31
DAC700K	★ 2848
	2658-32
DAC701B	★ 2848
	2658-52
DAC701K	★ 2848
	2658-53
DAC702B	★ 2848
	2658-33
DAC702K	★ 2848
	2658-34
DAC703B	★ 2848
	2658-54
DAC703K	★ 2848
	2658-55
DAC70C-CCD-I	★ 2848
	2659-35
DAC70C-COB-I	★ 2848
	2659-22
DAC70C-CSB-I	★ 2848
	2659-20
DAC71-CCD-V	★ 2848
	2659-41
DAC71-COB-V	★ 2848
	2659-42
DAC71-CSB-V	★ 2848
	2659-9
DAC72-CCD-V	★ 2848
	2659-43
DAC72-COB-V	★ 2848
	2659-10
DAC72-CSB-V	★ 2848
	2659-11
DAC72C-CCD-I	★ 2848
	2659-38
DAC72C-CCD-V	★ 2848
	2659-44
DAC72C-COB-I	★ 2848
	2658-40
DAC72C-COB-V	★ 2848
	2659-12

¶ Indicates page number in Application Note Directory.
★ Indicates additional data is provided on the page noted.

IC MASTER

Burr-Brown Research Corporation (Cont'd)

Device	Page-Line
DAC72C-CSB-I	★ 2848
	2658-41
DAC72C-CSB-V	★ 2848
	2659-13
DAC736J	★ 2848
	2658-28
DAC736K	★ 2848
	2658-21
DAC73J	★ 2848
	2658-29
DAC74	★ 2848
DAC80-CBI-V	★ 2848
	2652-20
DAC80-CCD-I	★ 2848
	2656-49
DAC80/CBI	★ 2848
	2649-49
DAC800-CBI-I	★ 2848
	2649-46
DAC800-CBI-V	★ 2848
	2649-47
DAC80Z-CBI-I	★ 2848
	2649-43
DAC80Z-CBI-V	★ 2848
	2652-21
DAC80Z-CCD-I	★ 2848
	2656-50
DAC82K	★ 2848
	2641-15
DAC82S	★ 2848
	2641-14
DAC850-CBI-I	★ 2848
	2649-44
DAC850-CBI-V	★ 2848
	2651-33
DAC851-CBI-I	★ 2848
	2649-45
	2649-48
DAC851-CBI-V	★ 2848
	2651-34
DAC85C-CBI-I	★ 2848
	2649-50
DAC85C-CBI-V	★ 2848
	2652-22
DAC85C/CCD	★ 2848
	2657-1
DAC85LB-CBI-V	★ 2848
	2652-23
DAC85Z-CBI-V	★ 2848
	2652-24
DAC862S	2650-20
DAC87/CBI	★ 2853
	2652-33
DAC870	★ 2853
DAC90B	★ 2848
	2640-54
DAC90S	★ 2848
	2640-16
DIV100	★ 2852
	3233-68
FOR110	3233-84
	¶ 286-5
FOR120	3233-85
FOT110	3233-90
	¶ 286-5
	¶ 287-10
FOT114	3233-91
FOT114-IR	3233-92
FOT120	3233-93
INA101	★ 2851
	3155-72
INA101SM	★ 2851
	3155-50
INA104	3155-73
ISO100AP	★ 2852
	3155-113
LOG100	★ 2852
	3155-133
MP10	★ 2849
	2643-15
	¶ 272-5
	¶ 275-16
	★ 2849
	1354-107
	¶ 272-5
	¶ 275-16
MP11	★ 2849
	2643-16
	¶ 272-5
	¶ 275-16
	★ 2849
	1354-108
	¶ 272-5
	¶ 275-16
MP20	★ 2849
	2628-35
	¶ 261-3
	¶ 272-5
	★ 2849
	1345-39
	1348-60
	1354-100
	¶ 261-3
	¶ 272-5
MP21	★ 2849
	2628-36
	¶ 261-3
	¶ 272-5
	★ 2849
	1341-122
	1344-81
	1346-103
	1347-97
	1354-101
	¶ 261-3
	¶ 272-5
MP22	★ 2849
	1344-82
	1345-40
	1348-61
	1354-102
MP32	★ 2849
	1344-83
	1345-41
	1348-62
	1354-103
MPC16S	★ 2850
	2624-75
MPC4D	★ 2850
	2623-1
MPC800	★ 2850
	2624-23
MPC801	★ 2850
	2622-117
MPC85	★ 2850
MPC8D	★ 2850
	2624-24
MPC8S	2623-81
MPY100	3235-82
MPY100A	3235-83
MPY100S	3235-84
OP21A	3180-103
OP21B	3180-105
OP21E	3180-104
OP21F	3180-106
OP21G	3180-107
OPA100	★ 2850
	3187-40
OPA100A	★ 2850
	3187-30
OPA100B	★ 2850
	3185-25
OPA100C	★ 2850
	3184-39
OPA100S	★ 2850
	3185-24
OPA101AM	★ 2850
	3185-33
OPA101BM	★ 2850
	3184-42
OPA102AM	★ 2850
	3185-34
OPA102BM	★ 2850
	3184-43
OPA103	★ 2850
	3185-18
OPA103AM	★ 2850
	3185-26
OPA103BM	★ 2850
	3185-23
OPA103CM	★ 2850
	3184-36
OPA103DM	★ 2850
	3184-34
OPA104AM	★ 2850
	3187-35
OPA104BM	★ 2850
	3185-15
OPA104CM	★ 2850
	3185-13
OPA105	★ 2853
	3187-43
OPA105UM	★ 2853
	3184-37
OPA105V	★ 2853
	3184-35
OPA105W	★ 2853
	3184-33
OPA106/MIL	★ 2853
	3187-42
OPA106U	★ 2853
	3184-32
OPA106V	★ 2853
	3184-31
OPA106W	★ 2853
	3184-29
OPA11HT	★ 2850
	3195-45
OPA12HT	★ 2851
	3201-34
OPA201A	★ 2850
	3187-6
OPA201B	★ 2850
	3184-26
OPA201C	★ 2850
	3183-5
OPA201S	★ 2850
	3184-27
OPA21A	★ 2850
	3183-6
OPA21B	★ 2850
	3184-24
OPA21E	★ 2850
	3183-7
OPA21F	★ 2850
	3184-25
OPA21G	★ 2850
	3187-5
OPA27A	★ 2850
	3181-52
OPA27B	★ 2850
	3182-24
OPA27C	★ 2850
	3183-29
OPA27E	★ 2850
	3181-53
OPA27F	★ 2850
	3182-25
OPA27G	★ 2850
	3183-30
OPA37A	★ 2850
	3181-54
OPA37B	★ 2850
	3182-32
OPA37C	★ 2850
	3183-31
OPA37E	★ 2850
	3181-55
OPA37F	★ 2850
	3182-33
OPA37G	★ 2850
	3183-32
OPA501	★ 2850
	3175-52
OPA501A	★ 2850
	3175-53
	3201-12
OPA501B	★ 2850
	3195-42
OPA501R	★ 2850
	3201-11
OPA501S	★ 2850
	3175-51
	3195-43
OPA600/MIL	★ 2853
	3180-163
OPA600N	★ 2853
	3190-9
OPA600U	★ 2853
	3195-17
OPA600U/883B	★ 2853
	3195-18
OPA600V/883B	★ 2853
	3190-10
OPA600V/MIL	★ 2853
	3190-11
OPA605	★ 2851
	3176-94
	3180-124
OPA605A	★ 2851
	3187-58
OPA605B	★ 2851
	3185-48
OPA605C	★ 2851
	3185-46
OPA605H	★ 2851
	3187-59
OPA605J	★ 2851
	3185-49
OPA605K	★ 2851
	3185-47
PCM50	★ 2849
	¶ 281-13
PCM501	3164-36
PCM52	★ 2849
	2659-26
	¶ 281-13
	★ 2849
	3164-37
	¶ 281-13
PCM53	★ 2849
	2659-27
	¶ 281-13
	★ 2849
	3164-38
	¶ 281-13
PCM75	★ 2849
	3164-35
	¶ 281-13
PCM75J	★ 2849
	2636-40
	¶ 281-13
PCM75K	★ 2849
	2636-30
	¶ 281-13
PGA100AG	★ 2851
	3155-91
PGA100BG	★ 2851
	3155-92
REF101	★ 2852
	3237-51
REF101J	★ 2852
	3237-26
REF101S	★ 2852
	3237-27
SDM853	★ 2849
SDM854	★ 2849
	3233-42
SDM856	★ 2849
	3233-43
SDM856J	★ 2849
	3233-44
SDM856K	★ 2849
	3233-45
SDM857	★ 2849
	3233-46
SDM858	★ 2849
	3233-47
SHC298AM	★ 2849
	3237-182
SHC80	★ 2849
	3237-183
SHC85	★ 2849
	3237-184
SHC85ET	★ 2849
	3237-185
SHM60	★ 2849
UAF11	★ 2852
	3232-10
UAF11H	★ 2852
	3232-11
UAF21	★ 2852
	3232-12
UAF21H	★ 2852
	3232-13
UAF31	★ 2852
	3232-14
UAF41	★ 2852
	3232-15
VFC12	★ 2849
VFC15	★ 2849
VFC32	★ 2849
	★ 2853
	3233-100
	3239-51
	¶ 284-20
VFC320	★ 2849
	3239-25
VFC3203	3239-26
VFC3205	3233-101
VFC320B	★ 2849
	3233-102
VFC320S	★ 2849
	3233-103
VFC32M	★ 2849
	★ 2853
	3233-104
	3239-52
	¶ 284-20
VFC42	★ 2849
	3233-105
	3239-53
VFC42M	★ 2849
	3233-106
	3239-54
VFC52	★ 2849
	3233-107
	3239-55
VFC52M	★ 2849
	3233-108
	3239-56
VFC62	★ 2849
	3233-109
VFC62B	★ 2849
	3233-110
VFC62C	★ 2849
	3233-111
VFC62S	★ 2849
	3233-112
XTR100AM	★ 2851
	3156-142
XTR100AP	★ 2851
	3156-143
XTR100BM	★ 2851
	3156-144
XTR100BP	★ 2851
	3156-145

Citel Inc.

Device	Page-Line
CopyROM 3716	4351-2
MA0200	★ 4628
	4461-42
MA0400	★ 4628
	4461-44
MA0800	★ 4628
	4461-46
MA1200	★ 4628
	4461-49
System 37	4351-3

Cromemco, Inc.

Device	Page-Line
256KZ	★ 2014
32KBS	★ 2012
4PIO	★ 2028
64FDC	★ 2027
64KZ-II	★ 2013
8PIO	★ 2029
ADC-12	★ 2025
CHI	★ 2020
CS-105E	1809-16
CS-3D5E	1809-17
CSP	★ 2022
CTI	★ 2033
Dc7A	★ 2023
DAC-12	★ 2024
DPU	★ 2008
	1965-41
FFP	★ 2011
GPIB	★ 2031
IOP	★ 2018
MCU	★ 2015
OCTART	★ 2016
PRI	★ 2032
QUADART	★ 2019
S-100	★ 2007
SCC	★ 2010
	1955-36
SDD	★ 2036
SDI	★ 2034
SMDI	★ 2017
System One	1809-18
TU-ART	★ 2030
WDI-II	★ 2026
Z-2H	1809-19
Z80 System 2	1811-1
Z80 System 3	1811-2
ZPU	★ 2009
	1955-19

Custom MOS Arrays

Device	Page-Line
CMA1000 Series	4476-18
CMA2004	★ 4630
	4465-9
CMA2008	★ 4630
	4465-10
CMA2011	★ 4630
	4465-11
CMA2015	★ 4630
	4465-12
CMA2024	★ 4630
	4465-13
CMOS Library	4476-19

Datel

Device	Page-Line
ADC-5101	★ 2860
	2625-50
ADC-5101E	★ 2860
	2625-51
ADC-5101H	★ 2860
	2625-52
ADC-5210	★ 2860
	2631-43
ADC-5210E	★ 2860
	2631-44
ADC-5210H	★ 2860
	2631-45
ADC-5211	★ 2860
	2631-46
ADC-5211E	★ 2860
	2631-47
ADC-5211H	★ 2860
	2631-48
ADC-5212	★ 2860
	2631-49
ADC-5212E	★ 2860
	2631-50
ADC-5212H	★ 2860
	2631-51
ADC-5213	★ 2860
	2631-27
ADC-5213E	★ 2860
	2631-28
ADC-5213H	★ 2860
	2631-29
ADC-5214	★ 2860
	2631-30
ADC-5214E	★ 2860
	2631-31
ADC-5214H	★ 2860
	2631-32
ADC-5215	★ 2860
	2631-33
ADC-5215E	★ 2860
	2631-34
ADC-5215H	★ 2860
	2631-35
ADC-5216	★ 2860
	2631-52
ADC-5216E	★ 2860
	2631-53
ADC-5216H	★ 2860
	2631-54
ADC-7109	2634-22
ADC-810MC	★ 2860
	2630-30
ADC-810MM	★ 2860
	2630-31
ADC-811MC	★ 2860
	2630-37
ADC-811MM	★ 2860
	2630-38
ADC-813	★ 2860
ADC-815MC	2625-46
ADC-815MM	2625-47
ADC-816MC	★ 2860
	2629-2
ADC-816MM	★ 2860
	2629-3
ADC-817MC	★ 2860
	2630-26
ADC-817MM	★ 2860
	2630-27
ADC-825MC	★ 2860
	2626-2
ADC-825MM	★ 2860
	2626-3
ADC-826MC	★ 2860
	2629-12

Arranged alphanumerically from left to right.

© IC MASTER 1984

Device	Page-Line
Datel (Cont'd)	
ADC-826MM	★ 2860 2629-13
ADC-827MC	★ 2860 2630-34
ADC-827MM	★ 2860 2630-35
ADC-830	★ 2863 2627-22
ADC-833	★ 2863
ADC-84-10	★ 2862 2629-20
ADC-84-12	★ 2862 2631-7
ADC-847A	★ 2863 2628-9
ADC-847B	★ 2863 2625-31
ADC-847M	★ 2863 2625-32
ADC-85-12	★ 2862 2631-8
ADC-856C	★ 2863 2629-4
ADC-856M	★ 2863 2629-5
ADC-85C-10	★ 2862 2629-21
ADC-85C-12	★ 2862 2631-9
ADC-87-10	2629-26
ADC-87-12	2631-10
ADC-EK10B	★ 2862 2629-51
ADC-EK12B	★ 2862 2634-12
ADC-EK12DC	★ 2862 2635-35
ADC-EK12DM	★ 2862 2635-36
ADC-EK8B	★ 2862 2627-42
ADC-ET10BC	★ 2862 2629-55
ADC-ET10BM	★ 2862 2629-54
ADC-ET12BC	★ 2862 2635-12
ADC-ET12BM	★ 2862 2634-9
ADC-ET8BC	★ 2862 2627-46
ADC-ET8BM	★ 2862 2627-45
ADC-HC12BMC	★ 2860 2634-7
ADC-HC12BMM	★ 2860 2634-8
ADC-HS12BMC	★ 2860 2631-1
ADC-HS12BMM	★ 2860 2631-2
ADC-HU3B	★ 2862 2625-1
ADC-HX12BGC	★ 2860 2632-31
ADC-HX12BMM	★ 2860 2632-32
ADC-HZ12BGC	★ 2860 2630-53
ADC-HZ12BMM	★ 2860 2630-54
ADC-MC8BC	★ 2862 2628-44
ADC-MC8BM	★ 2862 2628-45
AM-1435	★ 2861
AM-410-2C	★ 2864 3189-5
AM-410-2M	★ 2864 3188-4
AM-411-2C	★ 2864 3189-6
AM-411-2M	★ 2864 3188-5
AM-427-A	★ 2864 3183-23
AM-427-B	★ 2864 3181-43
AM-427-M	★ 2864 3183-24
AM-430	★ 2864 3176-22
AM-430A	★ 2864 3187-26
AM-430B	★ 2864 3184-49
AM-430M	★ 2864 3176-23 3187-27
AM-450-2	★ 2864 3200-14
AM-450-2M	★ 2864 3200-15
AM-452-2	★ 2864 3201-29
AM-452-2M	★ 2864 3201-30
AM-453-2C	★ 2864 3194-8
AM-453-2M	★ 2864 3194-9
AM-460-2	★ 2864 3195-46
AM-460-2M	★ 2864 3195-47
AM-462-1	★ 2864 3195-52
AM-462-1M	★ 2864 3195-53
AM-462-2	★ 2864 3195-54
AM-462-2M	★ 2864 3195-55
AM-464-2	★ 2864 3176-121 3198-24
AM-464-2M	★ 2864 3176-122 3198-25
AM-470-2C	★ 2865 3196-8
AM-470-2M	★ 2865 3196-9
AM-490	★ 2865 3182-61
AM-490-2A	★ 2865 3181-18
AM-490-2B	★ 2865 3181-16
AM-490-2C	★ 2865 3181-15
AM-490-2M	★ 2865 3181-17
AM-500	★ 2861 ★ 2865 3176-10
AM-500GC	★ 2861 ★ 2865 3176-62 3180-138 3192-56
AM-500MC	★ 2861 ★ 2865 3176-63 3180-139 3192-57
AM-500MM	★ 2861 ★ 2865 3192-59
AM-500MR	★ 2861 ★ 2865 3192-58
AM-542MC	★ 2861 3155-97 3182-18
AM-542MM	★ 2861 3155-98 3182-12
AM-542MR	★ 2861 3155-99 3182-13
AM-543MC	★ 2861 3155-100 3182-3
AM-543MM	★ 2861 3155-101 3182-1
AM-543MR	★ 2861 3155-102 3182-2
AM-551MC	★ 2861 3188-10
AM-551MM	★ 2861 3188-11
AM-7650	★ 2865 3181-5
DAC-0405	2638-2
DAC-0605	2638-26
DAC-0805	2640-5
DAC-08BC	★ 2863 2640-32
DAC-08BM	★ 2863 2640-33
DAC-562C	★ 2863 2650-3
DAC-562M	★ 2863 2648-8
DAC-608	★ 2863
DAC-610	★ 2863
DAC-612	★ 2863 2659-36
DAC-71-CCD-I	2659-39
DAC-71-CCD-V	2658-35
DAC-71-COB-I	2659-1
DAC-71-COB-V	2658-36
DAC-71-CSB-I	2659-2
DAC-71-CSB-V	2659-37
DAC-72C-CCD-I	2659-40
DAC-72C-CCD-V	2658-37
DAC-72C-COB-I	2659-3
DAC-72C-COB-V	2658-38
DAC-72C-CSB-I	2659-4
DAC-72C-CSB-V	★ 2863 2640-55
DAC-7523	★ 2863 2645-40
DAC-7533	★ 2863 2651-14
DAC-7541	2649-38
DAC-85C-CBI-I	2651-49
DAC-85C-CBI-V	2656-37
DAC-85C-CCD-I	2656-42
DAC-85C-CCD-V	★ 2861
DAC-87-CCD-I	★ 2861 2656-38
DAC-87-CCD-V	★ 2861 2656-43
DAC-87C-CBI-I	★ 2861 2649-39
DAC-87C-CBI-V	★ 2861 2651-50
DAC-HA10BC	★ 2860 2644-21
DAC-HA10BC-1	★ 2860 2644-19
DAC-HA10BM	★ 2860 2644-22
DAC-HA10BM-1	★ 2860 2644-20
DAC-HA12BC	★ 2860 2650-24
DAC-HA12BC-1	★ 2860 2650-26
DAC-HA12BM	★ 2860 2650-25
DAC-HA12BM-1	★ 2860 2650-27
DAC-HA12DC	★ 2860 2657-6
DAC-HA12DC-1	★ 2860 2657-4
DAC-HA12DM	★ 2860 2657-7
DAC-HA12DM-1	★ 2860 2657-5
DAC-HA14BC	★ 2860 2657-41
DAC-HA14BC-1	★ 2860 2657-43
DAC-HA14BM	★ 2860 2657-42
DAC-HA14BM-1	★ 2860 2657-44
DAC-HF10BMC	★ 2860 2643-49
DAC-HF10BMM	★ 2860 2643-50
DAC-HF12BMC	★ 2861 2649-5
DAC-HF12BMM	★ 2861 2649-6
DAC-HF8BMM	★ 2860 2640-10
DAC-HFBMC	2640-11
DAC-HK12BGC	★ 2861 2652-1
DAC-HK12BGC-2	★ 2861 2652-2
DAC-HK12BMM	★ 2861 2652-3
DAC-HK12DGC	★ 2861 2656-44
DAC-HK12DMM	★ 2861 2656-45
DAC-HP16BMC	★ 2861 2659-15
DAC-HP16BMC-1	★ 2861 2659-16
DAC-HP16BMM	★ 2861 2659-17
DAC-HP16BMM-1	★ 2861 2659-18
DAC-HP16DGC	★ 2861 2659-31
DAC-HP16DMC	★ 2861 2659-32
DAC-HP16DMM	★ 2861 2659-33
DAC-HZ12BGC	★ 2861 2652-10
DAC-HZ12DGC	★ 2861 2656-46
DAC-HZ12DMC	★ 2861 2656-47
DAC-HZ12DMM	★ 2861 2656-48
DAC-IC10B	★ 2863 2644-7
DAC-IC10BC	★ 2863 2645-45
DAC-IC10BM	★ 2863 2644-8
DAC-IC8BC	★ 2863 2641-18
DAC-IC8BM	★ 2863 2641-19
DAC-UP10B	★ 2863 2646-26
DAC-UP8BC	★ 2863 2641-43
DAC-UP8BM	★ 2863 2641-44
DAS-952R	★ 2865 3233-50
FLT-U2	★ 2865 3232-19
FLT-U2M	★ 2865 3232-20
General reference	★ 2855
HAC-HK12BMM-2	2652-4
HAC-HZ12BMM	2652-11
HDAS-16MC	★ 2861 2631-3
	★ 2861 3233-48
HDAS-16MM	★ 2861 2631-4
	★ 2861 3233-49
HDAS-8MC	★ 2861 2631-5
	★ 2861 3233-4
HDAS-8MM	★ 2861 2631-6
	★ 2861 3233-5
MV-1606	★ 2864 2624-47
MV-1606M	★ 2864 2624-43
MV-808	★ 2864 2623-28
MV-808M	★ 2864 2623-29
MVD-409	★ 2864 2622-69
MVD-409M	★ 2864 2622-70
MVD-807	★ 2864 2623-115
MVD-807M	★ 2864 2623-116
MX-1606	★ 2864 2624-76
MX-1606M	★ 2864 2624-74
MX-1616	★ 2864 2624-72
MX-1616M	★ 2864 2624-73
MX-808	★ 2864 2623-83
MX-808M	★ 2864 2623-84
MX-818	★ 2864 2623-77
MX-818M	★ 2864 2623-78
MXD-409	★ 2864 2623-2
MXD-409M	★ 2864 2623-3
MXD-807	★ 2864 2624-25
MXD-807M	★ 2864 2624-26
SHM-20C	★ 2864 3237-186
SHM-20M	★ 2864 3237-187
SHM-4860	★ 2861 ★ 2864
SHM-6MM	★ 2861 3237-188
SHM-7MC	★ 2864 3238-1
SHM-7MR	★ 2864 3238-2
SHM-8MC	3238-3
SHM-9	★ 2861
SHM-HUMC	★ 2861 3238-4
SHM-HUMM	3238-5
SHM-IC-1	★ 2864 3238-6
SHM-IC-1M	3238-7
SHM-LM-2	★ 2864 3238-8
SHM-LM-2M	3238-9
ST-6832	★ 2039
ST-711	★ 2039
ST-716	★ 2039
ST-728	★ 2039
ST-732	★ 2039
ST-LSI	★ 2039
ST-LSI2	★ 2039
VFQ-1	★ 2865 3239-27
VFQ-1C	★ 2865 3233-113
VFQ-2	★ 2865 3239-28
VFQ-3	★ 2865 3239-29
VFQ-3C	★ 2865 3233-114
VFV-100K	3239-57
VFV-10K	3239-58
VI-7660C	★ 2865 3239-6
VI-7660M	★ 2865 3239-7
VR-182A	3236-81
VR-182B	3236-82
VR-182C	3236-83
Emulogic	
ECL3211	★ 1904 1811-8
EMUNET-1	1811-9
EMUNET-2	1811-10
Exar Integrated Systems	
XR-A100	★ 3386 4473-31
XR-B100	★ 3386 4473-32
XR-C100	★ 3386 4473-29
XR-CMA	★ 3387
XR-CMB	★ 3387
XR-CMC	★ 3387
XR-CMD	★ 3387
XR-D100	★ 3386 4473-30
XR-E100	★ 3386 4473-33
XR-F100	★ 3386 4473-39
XR-G100	★ 3386 4473-36
XR-H100	★ 3386 4473-37
XR-J100	★ 3386 4473-35
XR-L100	★ 3386 4473-38
XR-M100	★ 3386 4473-41
XR-U100	★ 3386
XR-V100	★ 3386 4473-40
XR-W100	★ 3386 4473-42
XR-X100	4473-34
XR082	★ 3376 3208-4
XR082C	★ 3376 3209-44
XR082M	★ 3376 3208-5
XR083	★ 3376 3208-6
XR083C	★ 3376 3209-45
XR083M	★ 3376 3208-7
XR084	★ 3377 3212-8 ¶ 310-3
XR084C	★ 3377 3213-34 ¶ 310-3
XR084M	★ 3377 3212-9 ¶ 310-3
XR094	★ 3377 3212-16
XR094C	★ 3377 3213-39
XR094M	★ 3377 3212-17
XR095	★ 3377 3212-18
XR095C	★ 3377 3213-40
XR095M	★ 3377 3212-19
XR096	★ 3377 3212-14
XR096C	★ 3377 3213-38
XR096M	★ 3377 3212-15
XR1310	3168-125
XR13600	3167-58
XR14412F	★ 3369 3218-30
XR14412V	★ 3369 3218-31
XR1458	3175-1 3208-32
XR146	★ 3377 3196-24
XR1468	3228-7
XR1488	★ 3384 2668-48
XR1489A	★ 3384 2672-34
XR1524	★ 3381 3230-25
XR1525A	★ 3381 3230-26
XR1527A	★ 3381 3230-27
XR1543	★ 3382 3235-138
XR1568	3228-6
XR200	★ 3386 4471-27
XR2001C	★ 3383 3158-9

¶ Indicates page number in Application Note Directory.
★ Indicates additional data is provided on the page noted.

IC MASTER

Exar Integrated Systems (Cont'd)

Device	Page-Line
XR2002C	★ **3383**
	3158-10
XR2003C	★ **3383**
	3158-11
XR2003M	★ **3383**
	2679-91
XR2004C	★ **3383**
	3158-12
XR2011C	★ **3383**
	3158-13
XR2012C	★ **3383**
	3158-14
XR2013C	★ **3383**
	3158-15
XR2014C	★ **3383**
	3158-16
XR205	3215-20
XR210	★ **3365**
	3214-14
	¶ 310-12
XR2103	★ **3368**
	3218-4
XR210M	★ **3365**
	3214-15
	¶ 310-12
XR2120	★ **3368**
	3218-6
XR2121	★ **3369**
	3218-1
XR2122	★ **3370**
	3217-159
XR2123	★ **3370**
	3217-158
XR2125	★ **3371**
	3218-2
XR215	★ **3365**
	3214-25
	¶ 301-6
	¶ 310-9
	¶ 310-12
XR215M	★ **3365**
	3214-26
	¶ 301-6
	¶ 310-9
	¶ 310-12
XR2200	2679-68
XR2200M	2679-69
XR2201	2679-120
	3158-17
XR2201M	2679-121
	3158-18
XR2202	2679-139
	3158-19
XR2202M	2679-140
	3158-20
XR2203	2679-92
	3158-21
XR2203M	3158-22
XR2204	2679-73
	3158-23
XR2204M	2679-74
	3158-24
XR2206	★ **3373**
	3215-21
	3215-22
	3218-24
	3218-25
	¶ 285-11
	¶ 287-2
	¶ 287-9
	¶ 307-15
XR2206C	★ **3373**
	3215-23
	¶ 285-11
	¶ 287-2
	¶ 287-9
	¶ 307-15
XR2206M	★ **3373**
	3215-24
	3218-26
	¶ 285-11
	¶ 287-2
	¶ 287-9
	¶ 307-15
XR2207	3215-8
	3218-27
	¶ 287-2
	¶ 302-2
	¶ 310-7
XR2207C	3215-9
	¶ 287-2
	¶ 302-2
	¶ 310-7
XR2207M	3218-28
	¶ 287-2
	¶ 302-2
	¶ 310-7
XR2208	3235-30
	¶ 308-1
	¶ 310-6
	¶ 310-7
XR2208M	3235-31
	¶ 308-1
	¶ 310-6
	¶ 310-7
XR2209C	★ **3374**
	3215-10
XR2209M	★ **3374**
	3215-11
XR2211	3214-16
	3214-17
	3218-21
	3218-22
	¶ 282-17
	¶ 285-11
	¶ 287-2
	¶ 287-9
	¶ 308-1
XR2211C	3214-18
	3214-138
	3218-120
	¶ 282-17
	¶ 285-11
	¶ 287-2
	¶ 287-9
	¶ 308-1
XR2211M	3214-19
	3214-139
	3218-23
	3218-121
	¶ 282-17
	¶ 285-11
	¶ 287-2
	¶ 287-9
	¶ 308-1
XR2212M	★ **3366**
	3214-20
	¶ 301-6
	¶ 309-13
	¶ 310-1
	¶ 310-3
XR2213C	★ **3366**
	3214-140
	¶ 310-6
XR2213M	★ **3366**
	3214-141
	¶ 310-6
XR2216	3216-128
XR2228	3235-32
	¶ 301-6
XR2228M	3235-33
	¶ 301-6
XR2230	★ **3382**
	3230-28
	3236-38
XR2235	3230-29
XR2240C	3220-18
	¶ 302-2
	¶ 315-1
XR2240M	3220-19
	¶ 302-2
	¶ 315-1
XR2242C	3220-61
XR2242M	3220-62
XR2243	3220-8
XR2247	★ **3371**
	★ **3372**
	3155-47
XR2264	3238-93
XR2265	3238-94
XR2266	3238-95
XR2271	2663-70
XR2272	2663-68
XR2276	2661-1
	3234-117
XR2277	★ **3375**
	2661-23
XR2278	★ **3375**
	2661-24
XR2279	★ **3375**
	2661-25
XR2284	2662-120
XR2288	2663-86
XR246	★ **3377**
	3210-4
XR2524	★ **3381**
	3230-30
XR2525A	★ **3381**
	3230-31
XR2527A	★ **3381**
	3230-32
XR2543	★ **3382**
	3235-139
XR2556C	3220-66
XR2556M	3220-67
XR2567	★ **3367**
	3218-129
	¶ 299-3
XR2567C	★ **3367**
	3215-50
	¶ 299-3
XR2567M	★ **3367**
	3215-51
	3218-130
	¶ 299-3
XR300	★ **3386**
	4471-29
XR320	3220-4
	¶ 310-1
	¶ 310-3
XR3403	★ **3378**
	3180-73
	¶ 292-5
XR3417	3216-150
XR3418	3216-151
XR346	★ **3377**
	3210-5
XR346-2	★ **3377**
	3212-45
XR3470A	★ **3372**
	★ **3373**
	3155-43
XR3503	★ **3378**
	3180-74
XR3517	3216-152
XR3518	3216-153
XR3524	★ **3381**
	3230-33
XR3525A	★ **3381**
	3230-34
XR3527A	★ **3381**
	3230-35
XR3543	★ **3382**
	3235-140
XR400	★ **3386**
	4460-2
XR4136C	★ **3378**
	3212-47
	¶ 292-5
XR4136M	★ **3378**
	3211-51
	¶ 292-5
XR4151	★ **3385**
	3239-59
	¶ 309-13
XR4151C	★ **3385**
	3233-115
	¶ 309-13
XR4151M	★ **3385**
	3233-116
	¶ 309-13
XR4194M	3230-18
XR4195	3228-9
XR4202	★ **3378**
	3210-6
	¶ 292-5
XR4202M	★ **3378**
	3210-7
	¶ 292-5
XR4212	★ **3378**
	3165-180
XR4212C	★ **3378**
	3212-44
XR4212M	★ **3378**
	3211-48
XR4559	3208-56
	¶ 292-5
XR4739	★ **3378**
	3165-151
	3208-60
XR4739M	★ **3378**
	3165-152
XR4741C	★ **3378**
	3211-44
XR4741M	★ **3378**
	3210-56
XR494	★ **3380**
	3230-36
XR495	★ **3380**
	3230-37
XR500	★ **3386**
	4471-30
XR5532	★ **3378**
	3206-29
XR5532A	★ **3378**
	3206-30
XR5533	★ **3379**
	3206-31
XR5533A	★ **3379**
	3206-32
XR5534	★ **3379**
	3193-62
XR5534A	★ **3379**
	3194-1
XR5534C	★ **3379**
	3194-2
XR5534M	★ **3379**
	3191-51
XR555C	3220-31
XR555M	3220-32
XR556C	3220-68
XR556M	3220-69
XR558C	3220-93
XR558M	3220-94
XR559C	3220-98
XR559M	3220-99
XR567AC	★ **3367**
	3214-142
	3218-122
	¶ 299-3
XR567AM	★ **3367**
	3214-143
	3218-123
	¶ 299-3
XR6118	★ **3376**
	2663-102
XR6128	★ **3376**
	2663-103
XR7000	★ **3385**
	3155-122
XR8038	★ **3374**
	3215-25
XR8038A	★ **3374**
	3215-26
XR8038M	★ **3374**
	3215-27
XR9201	2641-28
XRC240	3218-38
XRC262	3218-39
XRC277	3218-40
XRCMA	4470-2
XRCMB	4470-3
XRCMC	4470-4
XRCMD	4470-5
XRCSD	4467-8
XRL555	3220-33
XRL556C	3220-70
XRL556M	3220-71
XRL567C	★ **3367**
	3214-144
XRL567M	★ **3367**
	3214-145
XRS200	3214-53
	¶ 310-12

Fairchild

Device	Page-Line
0026	2681-43
11C01C	600-43
11C05C	600-16
11C05M	600-17
11C06C	600-34
11C06M	600-35
11C70C	600-31
11C90C	600-25
	3215-65
11C90M	600-26
	3215-66
11C91C	600-23
	3215-53
11C91M	600-24
	3215-54
13L	4476-20
21021	3775-40
21021M	3775-41
21022	3775-51
21022M	3775-52
2102F	3775-30
2102FM	3775-31
2102H	3775-14
2102HM	3775-15
2102L1	3775-42
2102L1M	3775-43
2102L2	3775-53
2102L2M	3775-54
2102LF	3775-32
2102LFM	3775-33
2102LH	3775-16
2102LHM	3775-17
2114	3777-24
2114-2	3776-56
2114-3	3776-120
2114-3M	3776-121
2114L	3777-25
2114L-2	3776-57
2114L-3	3776-122
2114M	3777-26
21L021	3775-44
21L022	3775-55
21L02F	3775-34
21L02H	3775-18
2764	3766-87
3245	2683-37
3257	3755-23
3258	3755-14
32581	3755-15
32582	3755-16
3260	3783-105
3262A	3170-48
3262B	3170-49
3341	3757-34
3341A	3757-38
3341M	3757-35
3342	3791-61
3347	3791-66
3348	3791-38
3349	3791-39
3351-3	3757-31
	¶ 323-7
33511	3757-32
33512	3757-28
3351M	3757-29
	¶ 323-7
3357-1	3791-74
3357-2	3791-67
3514	3783-18
3708	2623-108
3814	641-55
3815	640-51
3816	641-111
3851	1347-107
3851A	1347-108
3851M	1347-109
3853	1347-116
3853M	1347-117
3854	1347-98
3856	1347-110
3856A	1347-111
3857	1347-112
3861	1347-102
3861M	1347-103
3871	1347-104
38T56	1347-113
38T57	1347-114
5116	3216-106
5151	3216-107
5156	3216-44
5400	621-149
5401	621-73
5402	624-40
5403	621-74
5404	607-40
5405	606-117
5406	614-70
5407	614-47
5408	619-79
5409	619-42
5410	620-120
54104	617-22
54105	617-23
54107	617-95
5411	618-175
5412	620-97
54121	630-95
54122	630-120
54123	630-158
54125	605-161
54126	605-137
5413	637-126
54132	638-17
5414	638-52
54141	2662-86
54145	612-49
54150	630-74
54151	629-145
54152	630-5
54153	628-26
54154	613-105
54155	613-10
54156	612-163
54157	628-196
5416	614-58
54160	610-21
54161	607-178
54162	610-72
54163	608-41
54164	632-20
	3790-81
54165	632-75
	3790-27
54166	632-95
	3790-36
54167	637-78
5417	614-37
54170	627-5
	3770-23
54173	615-121
54174	615-145
54175	615-36
54176	609-169
54177	607-122
54178	631-111
	3788-63
54179	631-118
	3768-64
54180	639-65
54181	604-17
54182	604-73
54190	611-71
54191	609-28
54192	611-31
54193	609-79
54194	631-148
	3788-65
54195	631-41
	3788-100
54196	609-170
54197	607-123
54198	632-56
	3789-109
54199	632-64
	3789-110
5420	620-36
5421	618-117
5422	620-1
5423	623-144
5425	623-132
5426	613-163
5427	623-171
54279	625-130
54283	605-66
54293	608-99
54298	629-61
5430	622-19
5432	623-76
5437	621-35
5438	620-178
5440	619-146
5442	612-66
5443	612-12
5444	612-6
5445	612-39
5446	2662-20
5447	2661-153
5448	2661-110
5449	2661-86
5450	622-95
5451	622-114
5453	623-29
5454	623-18
5460	622-158
5470	616-182
5472	617-5
5473	617-96
5474	614-151
5475	625-81
5476	617-155
5477	625-115

Arranged alphanumerically from left to right.

© IC MASTER 1984

Device	Page-Line
Fairchild (Cont'd)	
5480	603-160
5482	604-4
5483	605-67
5485	603-41
5486	624-152
5490	609-124
5491	632-135
	3790-113
5492	611-110
5493	608-100
5494	631-141
	3789-57
5495	631-81
	3788-66
5496	631-187
	3769-80
5497	638-156
54F00	621-175
54F02	624-76
54F04	607-69
54F08	619-108
54F10	620-144
54F109	617-59
54F11	619-8
54F112	618-47
54F113	618-8
54F114	618-84
54F138	613-51
54F139	612-130
54F148	639-42
54F151	629-163
54F153	628-46
54F157	629-24
54F158	628-133
54F160A	★ **710**
	610-48
54F161A	★ **714**
	608-16
54F162A	★ **710**
	610-96
54F163A	★ **714**
	608-61
54F164	632-37
54F169	608-187
54F174	618-114
54F175	615-52
54F181	★ **718**
	604-31
54F182	604-90
54F189	627-69
54F190	★ **722**
	611-85
54F191	★ **722**
	609-51
54F192	★ **726**
	611-49
54F193	★ **726**
	609-97
54F194	631-164
54F20	620-58
54F211	627-89
54F212	627-90
54F213	627-95
54F219	627-70
54F240	★ **729**
	633-156
	★ **729**
	2669-55
54F241	★ **729**
	634-30
54F242	633-88
54F243	633-89
54F244	★ **729**
	634-83
54F245	635-92
54F251	630-42
54F253	627-171
54F257	628-167
54F258	628-94
54F269	609-1
54F280	639-83
54F283	605-85
54F289	627-48
54F299	★ **731**
	632-169
54F311	627-85
54F312	627-86
54F313	627-93
54F319	627-49
54F32	623-99

Device	Page-Line
54F322	632-121
54F323	632-170
54F350	629-119
	629-123
54F352	627-145
54F353	627-111
54F373	★ **734**
	626-56
54F374	★ **736**
	616-117
54F378	616-1
54F379	615-96
54F381	604-32
54F382	604-33
54F384	605-11
54F385	603-6
54F398	629-70
54F399	629-71
54F401	2665-7
54F402	★ **738**
	2665-11
54F403	★ **743**
	637-10
	★ **743**
	3757-3
54F412	626-57
54F413	★ **750**
	637-12
	★ **750**
	3757-46
54F416	2665-24
54F418	★ **757**
	2665-25
	2666-1
54F430	2665-64
54F432	626-58
54F433	★ **743**
	637-14
	★ **743**
	3757-47
54F492	2665-12
54F500	★ **762**
	2625-6
54F510	638-144
54F521	603-94
54F524	603-31
54F525	639-133
54F526	636-90
54F533	626-120
54F534	616-48
54F537	612-110
54F538	613-84
54F539	613-4
54F543	636-12
54F544	636-13
54F545	635-93
54F547	613-35
54F548	613-36
54F550	636-14
54F551	636-15
54F557	605-21
54F558	605-1
54F559	604-108
54F568	610-179
54F569	608-174
54F570	627-46
54F571	627-44
54F579	608-175
54F582	605-47
54F583	603-164
54F588	637-22
54F604	625-163
54F605	625-164
54F606	625-165
54F607	625-166
54F610	637-25
54F611	637-26
54F612	637-27
54F613	637-28
54F630	2665-26
54F631	2665-27
54F64	623-53
54F673	633-54
	3791-21
54F674	633-41
	3791-22
54F675	633-51
	3791-23
54F676	★ **763**
	633-48
	★ **763**
	3791-24

Device	Page-Line
54F74	614-172
54F779	608-176
54F784	605-25
54F86	624-171
54H00	621-181
54H01	621-110
54H04	607-75
54H05	606-136
54H08	619-113
54H09	619-57
54H10	620-148
54H101	617-36
54H102	617-33
54H103	618-37
54H106	618-52
54H108	617-183
54H11	619-13
54H183	603-170
54H20	620-64
54H21	618-127
54H22	620-10
54H30	622-34
54H40	619-164
54H50	622-108
54H51	622-129
54H52	622-89
54H53	623-12
54H54	623-5
54H55	622-183
54H60	637-161
54H61	638-2
54H62	638-63
54H71	617-27
54H72	617-15
54H73	617-119
54H74	615-3
54H76	617-167
54H78	617-81
54H87	638-149
54HC00	583-67
54HC02	585-29
54HC07	573-89
54HC08	582-117
54HC10	583-15
54HC109	582-5
54HC112	581-152
54HC125	572-49
54HC132	593-84
54HC133	583-157
54HC138	578-146
54HC139	578-104
54HC14	573-165
54HC147	589-56
	589-60
54HC151	588-163
54HC153	589-14
54HC154	579-70
54HC160	576-94
54HC162	576-54
54HC163	574-42
54HC164	591-96
54HC165	591-68
54HC173	580-89
54HC175	580-125
54HC192	576-131
54HC193	574-115
54HC195	590-125
54HC20	582-168
54HC221	589-119
54HC240	594-4
54HC241	594-42
54HC242	593-50
54HC243	593-51
54HC244	593-158
54HC245	594-132
54HC251	589-15
54HC253	588-46
54HC257	588-123
54HC259	587-44
54HC27	584-178
54HC273	580-189
54HC280	571-179
54HC283	571-31
54HC299	591-147
54HC30	583-127
54HC32	584-77
54HC365	573-33
54HC366	572-175
54HC367	573-34
54HC368	572-176
54HC373	586-124
54HC374	581-67

Device	Page-Line
54HC390	577-49
54HC393	575-26
54HC4017	576-13
54HC4020	575-123
54HC4040	575-86
54HC4046	589-71
54HC4047	589-72
54HC4049	572-85
54HC4050	572-129
54HC4051	595-17
54HC4052	593-37
54HC4053	593-42
54HC42	578-25
54HC4510	577-9
54HC4512	589-16
54HC4514	579-71
54HC4516	574-116
54HC4538	589-120
54HC4703	592-69
54HC533	586-188
54HC534	581-27
54HC543	594-168
54HC544	594-169
54HC550	594-174
	594-178
54HC551	594-175
	594-179
54HC563	586-189
54HC564	581-28
54HC568	577-17
54HC569	574-117
54HC573	586-125
54HC574	581-68
54HC640	594-105
54HC643	594-102
54HC645	594-166
54HC646	594-88
54HC648	594-74
	594-172
54HC688	571-61
	571-139
54HC74	580-41
54HC75	586-45
54HC76	582-7
54HC85	571-102
54HC86	585-111
54HCT04	573-182
54HCT07	573-90
54LS00	621-190
54LS02	624-82
54LS03	621-116
54LS04	607-81
54LS05	606-142
54LS08	619-119
54LS09	619-59
54LS10	620-154
54LS109	617-64
54LS11	619-19
54LS112	618-58
54LS113	618-13
54LS114	618-89
54LS12	620-108
54LS122	630-128
54LS123	630-171
54LS125A	605-174
54LS126	605-148
54LS13	637-141
54LS132	638-30
54LS133	622-73
54LS136	624-134
54LS138	613-57
54LS139	612-138
54LS14	638-65
54LS15	618-154
54LS151	629-168
54LS152	630-13
54LS153	628-52
54LS155	613-21
54LS156	612-173
54LS157	629-31
54LS158	628-139
54LS160A	610-53
54LS161	608-21
54LS162A	610-101
54LS163A	608-66
54LS164	632-40
	3790-82
54LS165	632-88
	3790-37
54LS168	611-8
54LS169	609-8

Device	Page-Line
54LS170	627-14
	3770-24
54LS173A	615-134
54LS174	615-170
54LS175	615-57
54LS181	604-47
54LS189	3771-12
54LS190	611-92
54LS191	609-56
54LS192	611-57
54LS193	609-103
54LS194A	631-169
	3788-101
54LS195	631-61
54LS195A	3788-102
54LS196	610-4
54LS197	607-148
54LS20	620-71
54LS21	618-133
54LS22	620-16
54LS221	630-145
54LS240	633-162
	2669-56
54LS241	634-36
	2669-1
54LS242	2675-24
54LS243	2675-25
54LS244	634-89
54LS245	635-106
	2678-3
54LS247	2661-154
54LS248	2661-111
54LS249	2661-87
54LS251	630-47
54LS253	628-3
54LS256	625-53
54LS257A	628-173
54LS258A	628-100
54LS259	626-26
54LS26	621-20
54LS260	623-154
54LS266	625-32
54LS27	624-6
54LS273	616-72
54LS279	625-137
54LS28	624-83
54LS283	605-90
54LS289	3771-10
54LS290	609-143
54LS293	608-121
54LS295A	3788-103
54LS298	629-83
54LS299	632-183
	3790-4
54LS30	622-41
54LS32	623-105
54LS322	605-132
54LS323	633-1
	3790-5
54LS33	624-29
54LS347	2661-143
54LS352	627-150
54LS353	627-116
54LS365	606-52
54LS366	607-6
54LS367	606-53
54LS368	607-7
54LS37	621-54
54LS373	626-66
54LS374	616-123
54LS375	625-94
54LS377	616-154
54LS378	616-12
54LS379	615-107
54LS38	621-3
54LS386	624-178
54LS390	610-127
54LS393	608-84
54LS395	3788-104
54LS398	629-84
54LS399	629-85
54LS40	619-171
54LS42	612-93
54LS447	2661-144
54LS47	2661-155
54LS48	2661-112
54LS49	2661-88
54LS490	610-128
54LS503	639-22
54LS51	622-135
54LS533	626-126
54LS534	616-54

Device	Page-Line
54LS54	623-39
54LS540	2669-57
54LS541	2669-2
54LS55	622-171
54LS670	627-27
	3770-42
54LS74	615-12
54LS83	605-91
54LS85	603-42
54LS86	624-179
54LS89	3771-11
54LS90	609-144
54LS92	611-123
54LS93	608-122
54LS95B	631-98
	3788-105
54S00	622-8
54S02	624-107
54S04	607-96
54S05	606-157
54S08	619-134
54S09	619-75
54S10	620-169
54S109	617-79
54S11	619-33
54S112	618-71
54S113	618-28
54S114	618-104
54S132	638-46
54S133	622-80
54S134	622-62
54S135	624-120
54S137	613-98
54S138	613-72
54S139	612-152
54S140	613-133
	2670-39
54S15	618-168
54S151	629-183
54S153	628-67
54S157	629-46
54S158	628-154
54S167	637-83
54S174	615-185
54S175	615-72
54S189	3771-1
54S194	631-181
	3789-19
54S20	620-86
54S22	620-29
54S253	628-18
54S258	628-116
54S260	623-164
54S280	639-97
54S289	3770-123
54S30	622-56
54S32	623-120
54S40	619-186
54S51	622-149
54S64	623-59
54S65	623-68
54S74	615-27
54S86	625-13
55107A	2673-21
55110A	2671-9
55154	2672-54
55450B	2681-63
55452B	2681-118
55492A	2663-47
55S20	2684-4
55S234	2684-15
55S24	2684-29
73HC42	578-26
7400	621-150
7401	621-75
7402	624-41
7403	621-76
7404	607-41
7405	606-118
7406	614-71
7407	614-48
7408	619-80
7409	619-43
7410	620-121
74107	617-97
7411	618-176
7412	620-98
74121	630-96
74122	630-121
74123	630-159
74125	605-162
74126	605-138

¶ Indicates page number in Application Note Directory.
★ Indicates additional data is provided on the page noted.

IC MASTER

Fairchild (Cont'd)

Device	Page-Line
7413	637-127
74132	638-18
7414	638-53
74141	2662-87
74145	612-50
74150	630-75
74151	629-146
74153	628-27
74155	613-11
74156	612-164
74157	628-197
7416	614-59
74160	610-22
74161	607-179
74162	610-73
74163	608-42
74164	632-21
	3790-83
74165	632-76
	3790-28
74166	632-96
	3790-38
74167	637-79
7417	614-38
74170	627-6
	3770-25
74173	615-122
74174	615-146
74175	615-37
74176	609-171
74177	607-124
74178	3788-67
74179	631-119
	3788-68
74180	639-66
74190	611-72
74191	609-29
74192	611-32
74193	609-80
74194	631-149
	3788-69
74195	631-42
	3788-106
74196	609-172
74197	607-125
74198	632-57
	3789-111
74199	632-65
	3789-112
7420	620-37
7421	618-118
7422	620-2
7423	623-145
7425	623-133
7426	613-164
7427	623-172
74279	625-131
74283	605-68
74290	609-125
74293	608-101
74298	629-62
7430	622-20
7432	623-77
7437	621-36
7438	620-179
7439	620-180
7440	619-147
7441	2662-81
7442	612-67
7443	612-13
7445	612-40
7446	2662-21
7447	2661-156
7448	2661-113
7450	622-96
7451	622-115
7453	623-30
7454	623-19
7460	622-159
7470	616-183
7472	617-6
7473	617-98
7474	614-152
7475	625-82
7476	617-156
7482	604-5
7483	605-69
7485	603-43
7486	624-153
7490	609-126
7491	632-136
	3790-114
7492	611-111
7493	608-102
7494	631-142
	3789-58
7495	631-82
	3788-70
7496	631-188
	3789-81
7497	638-157
74F00	621-176
74F02	624-77
74F04	607-70
74F08	619-109
74F10	620-145
74F109	617-60
74F11	619-9
74F112	618-48
74F113	618-9
74F114	618-85
74F138	613-52
74F139	612-131
74F148	639-43
74F151	629-164
74F153	628-47
74F157	629-25
74F158	628-134
74F160A	★ **710**
	610-49
74F161A	★ **714**
	608-17
74F162A	★ **710**
	610-97
74F163A	★ **714**
	608-62
74F164	632-38
74F169	609-2
74F174	615-164
74F175	615-53
74F181	★ **718**
	604-34
74F182	604-91
74F189	627-71
74F190	★ **722**
	611-86
74F191	★ **722**
	609-52
74F192	★ **726**
	611-50
74F193	★ **726**
	609-98
74F194	631-165
74F20	620-59
74F211	627-91
74F212	627-92
74F213	627-96
74F219	627-72
74F240	★ **729**
	633-157
	★ **729**
	2669-58
74F241	★ **729**
	634-31
74F242	633-90
74F243	633-91
74F244	★ **729**
	634-84
74F245	635-94
74F251	630-43
74F253	627-172
74F257	628-168
74F258	628-95
74F269	609-3
74F280	639-84
74F283	605-86
74F289	627-50
74F299	★ **731**
	632-171
74F311	627-87
74F312	627-88
74F313	627-94
74F319	627-51
74F32	623-100
74F322	632-122
74F323	632-179
74F350	629-120
	629-124
74F352	627-146
74F353	627-112
74F373	★ **734**
	626-59
74F374	★ **736**
	616-118
74F378	616-2
74F379	615-97
74F381	604-35
74F382	604-36
74F384	605-12
74F385	603-7
74F398	629-72
74F399	629-73
74F401	2665-8
74F402	★ **738**
	2665-13
74F403	★ **743**
	637-11
	★ **743**
	3757-4
74F412	626-60
74F413	★ **750**
	637-13
	★ **750**
	3757-48
74F416	2665-28
74F418	★ **757**
	2665-29
	2666-2
74F430	2665-65
74F432	626-61
74F433	★ **743**
	637-15
	★ **743**
	3757-49
74F492	2665-14
74F500	★ **762**
	2625-7
74F510	638-145
74F521	603-95
74F524	603-32
74F525	639-134
74F526	636-91
74F533	626-121
74F534	616-49
74F537	612-111
74F538	613-85
74F539	613-5
74F543	636-16
74F544	636-17
74F545	635-95
74F547	613-37
74F548	613-38
74F550	636-18
74F551	636-19
74F557	605-22
74F558	605-2
74F559	604-109
74F568	610-180
74F569	608-177
74F570	627-47
74F571	627-45
74F579	608-178
74F582	605-48
74F583	603-165
74F588	637-23
74F604	625-167
74F605	625-168
74F606	625-169
74F607	625-170
74F610	637-29
74F611	637-30
74F612	637-31
74F613	637-32
74F630	2665-30
74F631	2665-31
74F64	623-54
74F673	633-55
	3791-25
74F674	633-42
	3791-26
74F675	633-52
	3791-27
74F676	★ **763**
	633-49
	★ **763**
	3791-28
74F74	614-173
74F779	608-179
74F784	605-26
74F86	624-172
74H00	621-182
74H01	621-111
74H04	607-76
74H05	606-137
74H08	619-114
74H09	619-58
74H10	620-149
74H101	617-37
74H103	618-38
74H106	618-53
74H108	617-184
74H11	619-14
74H183	603-171
74H20	620-65
74H21	618-128
74H22	620-11
74H30	622-35
74H40	619-165
74H50	622-109
74H51	622-130
74H52	622-90
74H53	623-13
74H54	623-6
74H55	622-184
74H61	638-3
74H62	638-84
74H72	617-16
74H73	617-120
74H74	615-4
74H87	638-150
74HC00	583-68
74HC02	585-30
74HC07	573-91
74HC08	582-118
74HC10	583-16
74HC109	582-8
74HC112	581-153
74HC125	572-50
74HC132	593-85
74HC133	583-158
74HC138	578-147
74HC139	578-105
74HC14	573-166
74HC147	589-57
	589-61
74HC151	588-164
74HC153	589-17
74HC154	579-72
74HC160	576-95
74HC162	576-55
74HC163	574-43
74HC164	591-97
74HC165	591-69
74HC173	580-90
74HC175	580-126
74HC192	576-132
74HC193	574-118
74HC195	590-126
74HC20	582-169
74HC221	589-121
74HC240	594-5
74HC241	594-43
74HC242	593-52
74HC243	593-53
74HC244	593-159
74HC245	594-133
74HC251	589-18
74HC253	588-47
74HC257	588-124
74HC259	587-45
74HC27	584-179
74HC273	580-190
74HC280	571-180
74HC283	571-32
74HC299	591-148
74HC30	583-128
74HC32	584-78
74HC365	573-35
74HC366	572-177
74HC367	573-36
74HC368	572-178
74HC373	586-126
74HC374	581-69
74HC390	577-50
74HC393	575-27
74HC4017	576-14
74HC4020	575-124
74HC4040	575-87
74HC4046	589-73
74HC4047	589-74
74HC4049	572-86
74HC4050	572-130
74HC4051	595-18
74HC4052	593-38
74HC4053	593-43
74HC4510	577-10
74HC4512	589-19
74HC4514	579-73
74HC4516	574-119
74HC4538	589-122
74HC4703	592-70
74HC533	586-190
74HC534	581-29
74HC543	594-170
74HC544	594-171
74HC550	594-176
	594-180
74HC551	594-177
	594-181
74HC563	586-191
74HC564	581-30
74HC568	577-18
74HC569	574-120
74HC573	586-127
74HC574	581-70
74HC640	594-106
74HC643	594-103
74HC645	594-167
74HC646	594-89
74HC648	594-75
	594-173
74HC688	571-62
	571-140
74HC74	580-42
74HC75	586-46
74HC76	582-9
74HC85	571-103
74HC86	585-112
74HCT04	573-183
74HCT07	573-92
74LS00	621-191
74LS02	624-84
74LS03	621-117
74LS04	607-82
74LS05	606-143
74LS08	619-120
74LS09	619-60
74LS10	620-155
74LS107	617-130
74LS109	617-65
74LS11	619-20
74LS112	618-59
74LS113	618-14
74LS114	618-90
74LS12	620-109
74LS125	606-1
74LS126	605-149
74LS13	637-142
74LS132	638-31
74LS133	622-74
74LS136	624-135
74LS138	613-58
74LS139	612-139
74LS14	638-66
74LS145	612-59
74LS15	618-155
74LS151	629-169
74LS153	628-53
74LS155	613-22
74LS156	612-174
74LS157	629-32
74LS158	628-140
74LS160	610-54
74LS161	608-22
74LS162	610-102
74LS163	608-67
74LS164	632-41
	3790-84
74LS165	632-89
	3790-39
74LS168	611-9
74LS169	609-9
74LS170	627-15
	3770-26
74LS173A	615-135
74LS174	615-171
74LS175	615-58
74LS181	604-48
74LS189	3770-115
74LS190	611-93
74LS191	609-57
74LS192	611-58
74LS193	609-104
74LS194A	3788-107
74LS195	631-62
74LS195A	3788-108
74LS196	610-5
74LS197	607-149
74LS20	620-72
74LS21	618-134
74LS22	620-17
74LS240	633-163
	2669-59
74LS241	634-37
	2669-3
74LS242	633-100
	2675-51
74LS243	633-101
	2675-52
74LS244	634-90
	2669-4
74LS245	635-107
	2678-13
74LS247	2661-157
74LS248	2661-114
74LS249	2661-89
74LS251	630-48
74LS253	628-4
74LS256	625-54
74LS257	628-174
74LS258	628-101
74LS259	626-27
74LS26	621-21
74LS260	623-155
74LS266	625-33
74LS27	624-7
74LS273	616-73
74LS279	625-138
74LS28	624-85
74LS283	605-92
74LS289	3770-114
74LS290	609-145
74LS293	608-123
74LS295	631-31
74LS295A	3788-109
74LS298	629-86
74LS299	633-2
	3790-6
74LS30	622-42
74LS32	623-106
74LS322	632-124
74LS323	633-3
	3790-7
74LS33	624-30
74LS347	2661-145
74LS352	627-151
74LS353	627-117
74LS365	606-54
74LS366	607-8
74LS367	606-55
74LS368	607-9
74LS37	621-55
74LS373	626-67
74LS374	616-124
74LS375	625-95
74LS377	616-155
74LS378	616-13
74LS379	615-108
74LS38	621-4
74LS386	624-180
74LS390	610-129
74LS393	608-85
74LS395	631-132
	3788-110
74LS398	629-87
74LS399	629-88
74LS40	619-172
74LS42	612-94
74LS447	2661-146
74LS47	2661-158
74LS48	2661-115
74LS49	2661-90
74LS490	610-130
74LS502	639-23
74LS503	639-24
74LS51	622-136
74LS533	626-127
74LS534	616-55
74LS54	623-40
74LS540	633-164
	2669-60
74LS541	634-38
	2669-5
74LS55	622-172
74LS563	626-128
74LS564	626-129
74LS573	626-68
74LS574	616-125
74LS670	627-28
	3770-43

Arranged alphanumerically from left to right

© IC MASTER 1984

Device	Page-Line
Fairchild (Cont'd)	
74LS74	615-13
74LS83	605-93
74LS85	603-44
74LS86	624-181
74LS92	611-124
74LS93	608-124
74LS95B	631-99
	3788-111
74S00	622-9
74S02	624-108
74S03	621-140
74S04	607-97
74S05	606-158
74S08	619-135
74S10	620-170
74S109	617-80
74S11	619-34
74S112	618-72
74S113	618-29
74S132	638-47
74S133	622-81
74S134	622-63
74S135	624-121
74S138	613-73
74S139	612-153
74S140	613-134
	2670-40
74S15	618-169
74S151	629-184
74S153	628-68
74S157	629-47
74S158	628-155
74S167	637-84
74S174	615-186
74S175	615-73
74S189	3770-108
74S194	631-182
	3789-20
74S20	620-87
74S22	620-30
74S253	628-19
74S257	628-188
74S258	628-117
74S260	623-165
74S289	3770-100
74S30	622-57
74S32	623-121
74S40	619-187
74S51	622-150
74S64	623-60
74S65	623-69
74S74	615-28
74S86	625-14
75107A	2673-22
75107B	2673-39
75108B	2673-44
75110A	2671-10
75150	2668-19
75154	2672-55
75239	2684-19
75450B	2681-64
75451A	2681-65
75451B	2681-66
75452A	2681-119
75452B	2681-120
75453A/B	2682-25
75461	2681-67
75462	2681-121
75471	2681-68
75472	2681-122
75474B	2681-155
75491	2663-12
75492	2663-48
75492A	2663-49
75S20	2684-5
75S234	2684-16
75S24	2684-30
9000M	617-24
9001C	617-25
9001M	617-26
9024C	617-42
9024M	617-43
91009C	636-129
9300C	631-43
	3788-112
9300M	631-44
	3788-113
9301C	612-68
9301M	612-69
9302C	612-70
9302M	612-71
9304C	603-166
9304M	603-167
9305C	608-103
9305M	608-104
9307C	2661-116
9307M	2661-117
9308C	625-61
9308M	625-62
9309C	627-129
9309M	627-130
9310C	610-23
9310M	610-24
9311C	613-106
9311M	613-107
9312C	629-125
9312M	629-126
9313C	629-141
9313M	629-142
9314C	625-125
9314M	625-126
9316C	607-180
9316M	607-181
93174C	615-147
9317BC	2661-159
9317BM	2661-160
9317CC	2662-22
9317CM	2662-23
9318C	639-27
9318M	639-28
9319C	610-158
9319M	610-159
9320C	638-82
9320M	610-160
9321C	612-118
9321M	612-119
9322C	628-198
9322M	628-199
9324C	603-45
9324M	603-46
932510C	3764-99
932511C	3764-102
9328C	633-19
	3791-12
9328M	633-20
	3791-13
9334C	626-13
	¶ 259-3
9334M	626-14
	¶ 259-3
9338C	626-167
	¶ 258-14
9338M	626-168
	¶ 258-14
93407C	626-169
93407M	626-170
9340C	605-64
9340M	605-65
93415AC	3774-41
93415C	3774-63
93415M	3774-77
93419A	3771-95
93419C	3771-98
93419M	3771-100
9341C	604-18
9341M	604-19
93422AM	3772-89
93422C	3772-102
93422M	3772-117
93425AC	3774-42
93425AM	3774-72
93425C	3774-67
93425M	3774-81
9342C	604-74
9342M	604-75
9344M	604-119
93452C	3762-80
93452M	3762-99
93453C	3762-81
93453M	3762-103
93460M	3763-61
93475	3775-101
93479	3773-127
9348C	639-129
9348M	639-130
93546M	603-80
9368C	2661-81
9370C	2661-77
9374C	2662-73
9386C	625-23
9386M	625-24
93L00C	3788-48
93L00M	3788-49
93L28C	3791-5
93L28M	3791-6
93L415	3774-78
93L415C	3774-79
93L415M	3774-97
93L421M	3772-54
93L422AC	3772-90
93L422AM	3772-121
93L422C	3772-118
93L422M	3772-122
93L425C	3774-82
93L425M	3774-101
93S00C	631-73
	3789-21
93S00M	631-74
	3789-22
93S10C	610-70
93S10M	610-71
93S12C	629-185
93S12M	629-186
93S137C	613-99
93S137M	613-100
93S16C	608-39
93S16M	608-40
93S41C	604-62
93S41M	604-63
93S42C	604-97
93S42M	604-98
93S43C	604-160
	¶ 250-3
93S43M	604-161
	¶ 250-3
93S46C	603-81
93S47C	603-82
93S47M	603-83
93S62C	639-98
93S62M	639-99
93Z450	3763-37
93Z450A	3763-28
93Z451	3763-39
93Z451A	3763-32
93Z510C	3764-100
93Z510M	3765-5
93Z511C	3764-103
93Z511M	3765-8
93Z564	3766-67
93Z565	3766-68
9401C	636-146
	2665-4
	1336-7
9401M	636-147
	2665-5
	1336-8
9403AC	1336-2
9403AM	1336-3
9407C	1336-11
9407M	1336-12
9410C	627-81
	3770-80
	1336-15
9410M	627-82
	1336-16
9414STC	636-150
	1336-13
9414STM	636-151
	1336-14
9423C	3757-42
	1336-5
9423M	3757-43
	1336-6
9428	2665-32
	1336-91
95H00C	3789-29
9600C	630-136
9600M	630-137
9601C	630-107
9601M	630-108
9602C	631-3
9602M	631-4
96101	614-7
96101C	2668-32
96101M	2668-33
96103M	2675-4
96106	2672-46
9612C	2670-29
9614C	2670-30
9614M	2670-31
9615C	2673-59
9615M	2673-60
9616	2668-24
9616E	2668-25
9616M	2668-26
9617C	2672-17
9624C	636-121
9624M	636-122
9625C	636-107
9625M	636-108
9634C	2670-61
9634M	2671-1
9636AC	2668-15
9636AM	2668-16
9637AC	2673-53
9637AM	2673-54
9640C	638-120
	2676-55
9640M	638-121
	2676-48
9641M	638-122
	2681-27
9643	2683-38
9645	3232-122
9650	2679-122
9665	3158-25
	2679-141
9666	3158-26
	2679-142
9666M	3158-27
	2679-93
9667	3158-28
	2679-94
9667M	3158-29
	2679-75
9668	3158-30
	2679-76
9668M	3158-31
96L02C	631-5
96L02M	631-6
96LS02C	631-13
96LS02M	631-14
96LS32	2680-100
96LS32C	2680-101
96LS42C	2680-103
96LS42M	2680-104
96LS488DC	637-20
	¶ 259-1
	1351-119
	1355-17
	¶ 259-1
96LS488DM	637-21
	¶ 259-1
	1351-120
	1355-18
	¶ 259-1
96S02C	631-17
96S02M	631-18
CCD111	3234-44
	3234-90
CCD112	3234-45
	3234-91
CCD121	3234-97
CCD122	3234-46
	3234-95
CCD123	3234-47
	3234-96
CCD133	3234-48
	3234-93
CCD134	3234-49
	3234-94
CCD142	3234-50
	3234-99
CCD143	3234-51
	3234-100
CCD145	3234-52
	3234-101
CCD151	3234-53
	3234-106
CCD222	3234-92
CCD321	3788-9
CCD321A	3239-5
CCD460	3788-39
CET200	3217-53
CMOS Library	4476-21
CT0750	4464-18
DAC08	2640-21
DAC08C	2642-27
DAC08E	2640-36
DAC1408	2641-20
DAC1408A	2641-21
DAC1408B	2642-37
DAC1408C	2642-45
DCM-1	1955-3
F10000C	598-93
	3789-30
F100101	599-55
F100102	599-58
F100107	599-61
F100132	596-65
F10010M	596-66
F100112	599-37
F100113	599-35
F100114	600-7
F100117	599-49
F100118	599-52
F100122	599-20
F100123	599-40
F100124	599-110
F100125	599-112
F100126	599-33
F100130	599-64
F100131	599-43
F100136	599-27
F100141	599-107
F100142	599-69
F100145	599-74
	3770-72
F10014C	598-123
F10014M	598-124
F100150	599-66
F100151	599-46
F100155	599-96
F100156	599-102
F100158	599-104
F100160	600-4
F100163	599-90
F100164	599-99
F100165	599-129
F100166	599-16
F10016C	596-44
F10016M	596-45
F100170	599-30
F100171	599-93
F100179	599-8
F100180	599-14
F100181	599-11
F100182	599-19
F100183	599-10
F100194	600-10
F100220	599-116
F100221	599-124
F100222	600-1
F100223	599-125
F100224	599-123
F100402	599-73
	3770-70
F10041	3790-106
F100414	599-77
F100414C	3772-7
F100415	599-80
F100415A	598-35
F100415C	3774-13
F100416	599-71
F100416C	3760-67
F100422	599-78
	3772-70
F100422C	3772-71
F100470	599-85
	3779-57
F100470A	3779-43
F100474	599-81
	3775-76
F100480	599-88
	3782-11
F100Z416	599-72
	3760-64
F10100	597-40
F10101	597-62
F10102	597-33
F10103	597-3
F10104	596-138
F10105	597-54
F10106	597-26
F10107	597-103
F10109	597-46
F10110	596-149
F10111	597-9
F10113	597-97
F10114	598-134
F10115	598-154
F10116	598-135
F10117	597-83
F10118	597-69
F10119	597-76
F10121	597-90
F10123	596-97
F10124	598-114
F10125	598-106
F10130	597-110
F10131	596-106
F10132	597-124
F10133	597-134
F10134	597-118
F10135	596-131
F10136	596-51
F10137	596-60
F10141	598-94
	3789-34
F10145A	3770-74
F10145AC	598-3
F10153	597-135
F10158	598-78
F10159	598-72
F10160	599-1
F10161	596-75
F10162	596-67
F10164	598-84
F10165	598-161
F10168	597-130
F10171	596-89
F10172	596-83
F10173	597-144
F10174	598-64
F10175	597-149
F10176	596-124
F10177	598-101
F10179	596-2
F10180	596-9
F10181	596-22
F10186	596-119
F10192	596-102
F10210	596-150
F10211	597-10
F10212	597-21
F10231	596-107
F10402	598-1
F10410C	3772-17
F10414C	3772-8
F10414M	3772-11
F10415	598-36
	3774-44
F10415A	598-37
F10415AC	3774-24
F10415C	3774-11
F10416	597-161
F10416C	3760-62
F10422	3772-73
F10422C	3772-74
F10470	598-56
	3779-60
F10470A	3779-47
F10474C	598-38
	3775-78
F10480	598-63
	3782-12
F10501	597-63
F10502	597-34
F10503	597-4
F10504	596-139
F10505	597-55
F10506	597-27
F10507	597-104
F10509	597-47
F10510	596-151
F105100	597-41
F10511	597-11
F10513	597-98
F10514	598-136
F10515	598-155
F10516	598-137
F10517	597-84
F10518	597-70
F10519	597-77
F10521	597-91
F10523	596-98
F10524	598-115
F10525	598-107
F10530	597-111
F10531	596-108
F10532	597-125
F10533	597-136
F10534	597-119
F10535	596-132
F10536	596-52
F10537	596-61
F10541	598-95
F10545A	3770-75
F10545AM	598-4
F10553	597-137

¶ Indicates page number in Application Note Directory.
★ Indicates additional data is provided on the page noted.

IC MASTER

Device	Page-Line
Fairchild (Cont'd)	
F10558	598-79
F10559	598-73
F10560	599-2
F10561	596-76
F10562	596-68
F10564	598-85
F10565	598-162
F10566	596-29
F10568	597-131
F10570	598-168
F10571	596-90
F10572	596-84
F10573	597-145
F10574	598-65
F10575	597-150
F10576	596-125
F10579	596-3
F10580	596-10
F10581	596-23
F10586	596-120
F10592	596-103
F10610	596-152
F10611	597-12
F10612	597-22
F10631	596-109
F10Z416	597-162
	3760-65
F10Z416A	3760-61
F16000	★ **1454**
	★ **1470**
	1350-23
	1352-39
	1352-42
F16008	★ **1470**
	1350-24
	1352-40
	1352-43
	★ **1470**
	1267-14
F16016	★ **1470**
	1350-25
	1351-73
	★ **1470**
	1285-4
F16032	★ **1470**
	1351-74
	★ **1470**
	1287-32
F16081	★ **1470**
	1350-30
	1352-62
F16082	★ **1470**
	1350-35
	1352-66
F16105	★ **1470**
	1350-32
	1352-72
F16201	★ **1470**
	1350-39
	1352-71
F16202	★ **1470**
	1350-33
	1352-64
F16203	★ **1470**
	1350-29
	1352-60
F16204	★ **1470**
	1350-27
	1352-54
F16413	★ **1470**
	1352-56
	1352-57
F16425	★ **1470**
	1350-37
	1352-68
F16456	★ **1470**
	1350-36
	1351-81
F16488	★ **1470**
	1350-31
	1351-77
F16802	1350-34
F232	3768-14
F264	3768-15
F2708	3763-124
F2708-1	3763-117
F2716	3765-72
F2716-1	3765-52
F2732	3766-57
F2847	3791-72
F2847L	3791-73
F2847LM	3791-69
F2847M	3791-70
F32032	1352-48
F3357M	3791-75
F3516-35	3784-9
F3515-45	3784-29
F3523	★ **1465**
F3528-10	3778-12
F3528-12	3778-42
F3528-15	3778-72
F3528-20	3778-122
F3528-35	3779-26
F3528L-10	3778-13
F3528L-12	3778-43
F3528L-15	3778-73
F3528L-20	3778-123
F35316-25	★ **1464**
	3783-117
F35316-30	★ **1464**
	3783-122
F3532-30	★ **1465**
	3784-83
F3532-35	★ **1465**
	3784-108
F3532-45	★ **1465**
	3785-5
F3533-30	★ **1465**
	3784-84
F3533-35	★ **1465**
	3784-109
F3533-45	★ **1465**
	3785-6
F3564-25	★ **1465**
	3785-83
F3564-35	★ **1465**
	3786-40
F3565-25	★ **1465**
	3785-100
F3565-35	★ **1465**
	3786-41
F3566-25	★ **1466**
	3785-110
F3566-35	★ **1466**
	3786-55
F3568-25	★ **1466**
	3785-111
F3568-35	★ **1466**
	3786-56
F3569-25	★ **1466**
	3785-112
F3569-35	★ **1466**
	3786-57
F3570-25	★ **1467**
	3785-113
F3570-35	★ **1467**
	3786-58
F3846	2686-34
F3850	1347-93
F3850M	1347-94
F3852	1347-100
F3864	1342-105
F3870	★ **1456**
	1341-39
	¶ 260-7
	★ **1456**
	1267-15
	¶ 260-7
F3870-PEP	★ **1456**
	1965-7
	¶ 260-7
F3872	1341-29
	1267-16
F3876	1341-30
	1267-17
F3878	1341-40
	1267-18
F387X	★ **1454**
F38C70	1341-41
	1267-19
F38E70	★ **1456**
	1341-25
	1341-42
	★ **1456**
	1267-20
F38L72	1341-31
	1267-21
F38L76	1341-32
	1267-22
F40014AM	593-122
F40014BC	593-123
F4001BC	585-31
F4001BM	585-32
F4002BC	584-139
F4002BM	584-140
F4006BC	591-161
	3789-97
F4006BM	591-162
F4006M	3789-101
F4007UBC	573-144
F4007UBM	573-145
F40085BC	571-104
F40085BM	571-105
F4008BC	571-33
F4008BM	571-34
F40097BC	573-37
F40097BM	573-38
F40098BC	573-174
F40098BM	573-175
F4011BC	583-69
F4011BM	583-70
F4012BC	582-170
F4012BM	582-171
F4013BC	580-43
F4013BM	580-44
F4014BC	591-124
	3790-53
F4014BM	591-125
	3790-65
F4015BC	590-49
	3789-70
F4015BM	590-50
	3789-75
F40160BC	576-96
F40160BM	576-97
F40161BC	574-79
F40161BM	574-80
F40162BC	576-56
F40162BM	576-57
F40163BC	574-44
F40163BM	574-45
F4016C	2617-56
F4016M	2617-57
F40174BC	580-155
F40174BM	580-156
F40175BC	580-127
F40175BM	580-128
F4017BC	576-15
F4017BM	576-16
F4018BC	577-139
F4018BM	577-140
F40192BC	576-133
F40192BM	576-134
F40193BC	574-121
F40193BM	574-122
F40194BC	590-95
	3789-46
F40194BM	590-96
	3789-35
F40195BC	590-127
	3789-47
F40195BM	590-128
	3789-36
F4019BC	583-172
F4019BM	583-173
F4020BC	575-125
F4020BM	575-126
F4021BC	591-11
	3790-54
F4021BM	591-12
	3790-66
F4022BC	577-111
F4022BM	577-112
F4023BC	583-17
F4023BM	583-18
F4024BC	575-48
F4024BM	575-49
F4025BC	584-180
F4025BM	584-181
F4027BC	582-10
F4027BM	582-11
F4028BC	578-27
F4028BM	578-28
F4029BC	577-159
F4029BM	577-160
F4030BC	585-113
F4030BM	585-114
F4031BC	592-1
	3791-40
F4031BM	592-2
	3791-42
F4034BC	591-32
F4034BM	591-33
F4035BC	590-149
	3789-48
F4035BM	590-150
	3789-37
F4040BM	575-88
F4041BC	572-28
F4041BM	572-29
F4042BC	586-47
F4042BM	586-48
F4043BC	586-103
F4043BM	586-104
F4044BC	586-82
F4044BM	586-83
F4046BC	592-85
	3214-34
F4046BM	592-86
	3214-35
F4047BC	589-75
F4047BM	589-76
F4049BC	572-87
F4049BM	572-88
F404BC	575-89
F4050BC	572-131
F4050BM	572-132
F4051BC	2623-30
F4051BM	2623-31
F4052BC	2622-75
F4052BM	2622-76
F4053BC	2619-54
F4053BM	2619-55
F4066BC	2617-24
F4066BM	2617-25
F4067BC	2624-48
F4067BM	2624-49
F4068BC	583-129
F4068BM	583-130
F4069UBC	573-184
F4069UBM	573-185
F4070BC	585-115
F4070BM	585-116
F4071BC	584-79
F4071BM	584-80
F4072BC	584-29
F4072BM	584-30
F4073BC	582-81
F4073BM	582-82
F4075BC	584-46
F4075BM	584-47
F4076BC	580-91
F4076BM	580-92
F4077BC	585-169
F4077BM	585-170
F4078BC	585-86
F4078BM	585-87
F4081BC	582-119
F4081BM	582-120
F4082BC	582-64
F4082BM	582-65
F4085BC	583-194
F4085BM	583-195
F4086BC	584-18
F4086BM	584-19
F4093BC	593-86
F4093BM	593-87
F4104BE	592-30
F4104BM	592-31
F4116-2	3768-85
F4116-3	3768-102
F4116-4	3769-5
F4164	3769-35
F4164-12	3769-41
F4164-15	3769-59
F4164-20	3769-88
F4510BC	576-135
F4510BM	576-136
F4511BC	579-170
	2662-41
F4511BM	579-171
	2662-42
F4512BC	588-184
F4512BM	588-185
F4514BC	579-18
F4514BM	579-19
F4515BC	579-20
F4515BM	579-21
F4516BC	574-123
F4516BM	574-124
F4518BC	577-19
F4518BM	577-20
F4519BC	588-153
F4519BM	588-154
F4520BC	575-1
F4520BM	575-2
F4522BC	576-193
F4522BM	576-194
F4526BC	574-179
F4526BM	574-180
F4528BC	589-92
F4528BM	589-93
F4531BC	595-25
F4531BM	595-26
F4532BC	595-3
F4532BM	595-4
F4539BC	588-51
F4539BM	588-52
F4553BC	577-65
F4553BM	577-66
F4555BC	578-75
F4555BM	578-76
F4556BC	578-89
F4556BM	578-90
F4557BC	592-14
	3791-48
F4557BM	592-15
	3791-44
F4582BC	571-88
F4582BM	571-89
F4583BC	593-30
F4583BM	593-31
F464	3788-40
F4702BC	592-43
	2685-33
	1336-29
F4702BM	592-44
	2685-34
	1336-30
F4703BC	587-125
	1336-25
F4703BM	587-126
	1336-26
F4704BC	571-59
	1336-21
F4704BM	571-60
	1336-22
F4705BC	571-74
	1336-17
F4705BM	571-75
	1336-18
F4706BC	587-127
	1336-27
F4706BM	587-128
	1336-28
F4707BC	571-57
	1336-19
F4707BM	571-58
	1336-20
F4708C	1336-23
F4708M	1336-24
F4710BC	587-135
	3771-44
	1336-33
F4710BM	587-136
	3771-45
	1336-34
F4720AC	587-143
	3772-55
F4720AM	587-144
F4720C	587-145
	3772-56
	1336-37
F4720M	587-146
	3772-57
	1336-38
F4721BC	588-22
F4721BM	588-23
F4723BC	586-21
F4723BM	586-22
F4724BC	587-46
F4724BM	587-47
F4725BC	587-129
	1336-35
F4725BM	587-130
	1336-36
F4726BC	1336-39
F4726BM	1336-40
F4731BC	590-91
	3791-59
F4731BM	590-92
	3791-60
F4734BC	579-172
	2662-75
F4734BM	579-173
	2662-76
F4735BC	1336-41
F4735BM	1336-42
F4736BC	588-4
F4736BM	588-5
F64K-12	3769-42
F64K-15	3769-60
F64K-20	3769-89
F68-PEP	1961-15
F6800	★ **1454**
	★ **1458**
	★ **1461**
	1342-91
	★ **1454**
	★ **1458**
	★ **1461**
	1267-23
F6801	1342-30
	1267-24
F6801E	1342-17
F6802	★ **1461**
	1342-59
	★ **1461**
	1267-25
F6803	1342-21
	1267-26
F6808	★ **1461**
	1342-81
	★ **1461**
	1267-27
F6809	★ **1459**
	1342-71
	★ **1459**
	1267-28
F6809E	★ **1459**
	1342-50
	★ **1459**
	1267-29
F6810	★ **1461**
	3771-126
F6820	1343-37
	1355-24
F6821	★ **1462**
	1343-38
	1355-25
F68316	★ **1464**
	3784-10
F68332	★ **1465**
	3785-35
F6840	★ **1462**
	1343-66
F6844	★ **1462**
	1342-162
F6845	★ **1460**
	1342-144
F6846	★ **1463**
	1343-83
F6847	1353-15
F68488	★ **1463**
	1343-14
F6850	★ **1463**
	2685-4
	★ **1463**
	1342-116
	1354-119
F6852	★ **1464**
	1343-103
	1355-49
F6854	★ **1464**
	1342-106
F6856	★ **1460**
	2686-35
	★ **1460**
	1342-107
F68708	3763-125
F68716	3765-73
F6882	★ **1461**
	1342-60
F68A00	1342-92
F68A02	1342-61
F68A09	★ **1459**
	1342-72
	★ **1459**
	1267-30
F68A09E	★ **1459**
	1342-51
	★ **1459**
	1267-31
F68A10	3771-120
F68A21	1343-39
	1355-26
F68A332	3784-110
F68A40	1343-67

Arranged alphanumerically from left to right.

© IC MASTER 1984

Fairchild (Cont'd)

Device	Page-Line
F68A50	1342-117
	1354-120
F68A52	1343-104
F68A54	★ **1464**
	1342-108
F68B00	1342-93
F68B09	★ **1459**
	1342-73
	★ **1459**
	1269-1
F68B09E	★ **1459**
	1342-52
	★ **1459**
	1269-2
F68B10	3771-114
F68B21	1343-40
	1355-27
F68B308	3783-47
F68B40	1343-68
F68B50	1342-118
F68B52	1343-105
F68B54	1342-109
F8	★ **1454**
	★ **1457**
	1347-95
	¶ 260-7
F9440	1285-5
F9440C	1351-57
F9440M	1351-58
F9442C	1351-66
	1351-68
F9443	1351-65
F9444	1351-69
F9445	★ **1468**
	1351-59
	★ **1468**
	1285-6
F944518	1351-60
F944520	1351-61
F944524	1351-62
F9446	1351-72
F9447	★ **1468**
	1351-67
F9448	1351-71
F9449	★ **1469**
	1351-70
F9450	★ **1469**
F9454	1351-63
F9470	★ **1469**
	1351-64
FACT	★ **766**
FAIRCAD	★ **4635**
FCB8010	3166-64
FCM7040	3173-24
FBC0500	★ **4634**
FBC1200	★ **4634**
FBC2400	★ **4634**
	4461-11
FBC4000	★ **4634**
	4461-12
FBC6000	★ **4634**
	4461-13
FBE0020	★ **4634**
	4460-11
FBE0500	★ **4634**
	4460-12
FGE1000	4460-13
FBE2000	★ **4634**
	4460-14
FBT0750	★ **4634**
	4462-23
FQ3467	3157-163
FQ3468	3157-164
FQ3724	3157-143
FQ3725	3157-144
FS-1	★ **1906**
	1811-11
Formulator Mark III	1811-12
GLOW-16	1967-23
HD10104	596-140
LM1014	3173-48
LM1014A	3173-49
Macrologic Bipolar	1257-7
Macrologic CMOS	1257-8
Microflame 1	1811-13
PEP-45	★ **1910**
	1965-20
PEP-88	★ **1912**
	1811-14
SH123	3221-117
SH1605A	3230-38
SH223	3221-118
SH323	3221-119
SPARK-16	1967-24
TBA641	3164-78
TBA820	3164-79
UA739	3165-153
ZN54170	3770-27
u	3195-13
u78HG	3228-56
uA101	3197-3
uA101A	3175-16
uA101AM	3191-32
uA105M	3229-39
uA108	3206-45
uA108AM	3186-21
uA108M	3190-35
uA109M	3221-57
uA111M	3159-39
uA117	3228-105
uA123	3221-120
uA124	3180-45
uA139	3162-52
uA139A	3162-21
uA1458	3175-2
uA1458C	3208-33
uA148	3211-32
uA1488	2668-49
uA1489	2672-26
uA1489A	2672-35
uA1558M	3207-34
uA193	3161-31
uA193A	3160-52
uA198	3238-10
uA201	3199-63
uA201AM	3191-33
uA208AM	3186-22
uA208M	3190-36
uA209M	3221-58
uA217	3228-106
uA223	3221-121
uA224	3180-46
uA2240C	3220-20
uA2240M	3220-21
uA239	3163-7
uA239A	3162-31
uA248	3212-29
uA2903	3161-54
uA293	3161-42
uA293A	3160-55
uA298	3238-11
uA301A	3199-48
uA305AC	3229-46
uA305C	3228-47
uA3086M	3157-5
uA308AC	3186-50
uA309C	3221-59
uA311C	3160-26
uA317	3228-107
uA318	3201-36
uA323	3221-122
uA324	3180-47
uA3303C	3180-75
uA339	3163-8
uA339A	3162-32
uA3403	3213-27
uA3403C	3180-76
uA3448A	2675-35
uA348	3212-30
uA376C	3229-31
uA393	3161-43
uA393A	3160-56
uA4136C	3212-48
uA4136M	3211-52
uA431	3228-91
uA494	3230-39
uA494M	3230-40
uA555C	3220-34
uA556C	3220-72
uA565J	2650-18
uA565K	2648-20
uA565S	2650-19
uA565T	2648-21
uA571J	2630-6
uA571K	2629-44
uA571S	2630-7
uA571T	2629-45
uA709AM	3191-46
uA709C	3200-3
uA709M	3196-44
uA710C	3160-5
uA710M	3159-23
uA711C	3161-36
uA711M	3161-15
uA714	3182-48
uA714C	3203-41
uA714E	3182-53
uA715C	3180-120
	3199-61
uA715M	3180-121
	3197-22
uA723C	3229-6
uA723M	3229-7
uA725A	3182-66
uA725AM	3187-9
uA725C	3191-62
uA725E	3182-67
uA725M	3188-49
uA726C	3238-117
uA726M	3238-118
uA727C	3156-33
uA727M	3156-34
uA7332	3165-18
uA733C	3156-85
uA733M	3156-86
uA734C	3160-12
uA734M	3159-35
uA739	3165-154
	3209-5
uA7392	3173-50
	3235-2
	¶ 307-13
uA741	3175-26
uA741AM	3187-29
uA741C	3198-43
uA741EC	3187-28
uA741M	3196-49
uA747AM	3206-7
uA747C	3208-34
uA747EC	3206-8
uA747M	3207-35
uA748C	3198-55
uA748M	3197-7
uA749	3165-155
uA749C	3206-15
uA749D	3209-32
uA757	3167-142
uA759	3175-90
	3193-16
uA759C	3175-91
	3198-36
uA760C	3160-19
uA760M	3160-20
uA771A	3190-14
uA771AM	3190-15
uA771B	3195-14
uA771BM	3195-15
uA771L	3202-23
uA772	3209-27
uA772A	3205-11
uA772AM	3205-12
uA772B	3206-45
uA772BM	3206-46
uA772L	3209-41
uA774	3213-23
uA774B	3211-18
uA774BM	3211-19
uA774L	3213-30
uA776	3190-49
uA776C	3208-17
uA776M	3206-52
uA7805C	3221-81
uA7805M	3221-82
uA7806C	3222-48
uA7808C	3222-113
uA7808M	3222-114
uA7812C	3223-86
uA7812M	3223-87
uA7815C	3224-59
uA7815M	3224-60
uA7818C	3225-3
uA7818M	3225-4
uA7824C	3225-90
uA7824M	3225-91
uA7885	3223-18
uA78G	3228-55
uA78H05	3222-12
uA78H05A	3222-13
uA78H08C	3223-7
uA78H12A	3224-3
uA78L05C	3221-6
uA78L09C	3223-20
uA78L12C	3223-45
uA78L15C	3224-19
uA78L62C	3222-77
uA78L82C	3223-14
uA78M05C	3221-37
uA78M05M	3221-38
uA78M06C	3222-31
uA78M06M	3222-32
uA78M08C	3222-99
uA78M08M	3222-100
uA78M12C	3223-58
uA78M12M	3223-59
uA78M15C	3224-32
uA78M15M	3224-33
uA78M24C	3225-68
uA78M24M	3225-69
uA78MG	3228-54
uA78P05	3222-23
uA78S40	3230-41
uA78S40M	3230-42
uA7905C	3226-30
uA7905M	3226-31
uA7908C	3226-92
uA7908M	3226-86
uA7912C	3227-1
uA7912M	3227-2
uA7915C	3227-52
uA7915M	3227-53
uA791C	3199-9
uA798	3180-37
uA798C	3208-25
uA79E02	3226-3
uA79E02C	3226-4
uA79G	3229-78
uA79HG	3229-70
uA79M05C	3226-15
uA79M05M	3226-16
uA79M08C	3226-87
uA79M12C	3226-122
uA79M12M	3226-123
uA79M15C	3227-38
uA79M15M	3227-39
uA79MG	3229-77
uA8T26A	2675-66
uA8T26AM	2676-1
uA8T26	2676-13
uA8T28M	2676-14
uA9706C	2638-36
uA9708	3233-3
	1354-99
uA9708C	2628-41
uA9708M	2628-42
uAF398	3238-12
uAF771	3175-40

Fujitsu America

Device	Page-Line
FBC304D2A	3768-13
FBC304M1A	3768-12
FBM304D2A	★ **3938**
FBM304M1A	★ **3938**
FBM31D8	★ **3940**
	3768-7
FBM32DA	★ **3940**
	3768-8
FBM42DA	★ **3941**
	3768-11
FBM43DA	★ **3941**
	3768-10

Fujitsu Microelectronics, Inc.

Device	Page-Line
B1100	★ **4637**
	4461-10
B200	★ **4637**
	4467-3
B2000	★ **4638**
	4460-44
B350	★ **4637**
	4461-9
B500	★ **4637**
	4461-23
C1275	4467-42
C1275H	★ **4639**
	4464-15
C2000	4467-43
C2000H	★ **4639**
	4464-16
C2600	★ **4640**
C3900	★ **4640**
	4467-44
C3900H	★ **4639**
	★ **4640**
	4464-17
C440H	★ **4639**
	4464-13
C770	4467-41
C770H	★ **4639**
	4464-14
C8000VH	★ **4640**
	4463-21
CMOS Library	4476-22
FT5753	2682-76
FT5754	2682-77
FT5755	2682-78
MB1412A	637-1
	2665-63
MB3720	3165-19
MB3730	3165-20
MB3731	3165-21
MB3759	3230-46
MB3760	3230-47
MB4052	2627-27
MB4053	2628-34
	2628-43
MB4111	2681-18
MB4112	2681-19
MB4204	3163-4
MB425	1344-88
MB426	1344-89
MB501	2685-92
MB502	1354-12
MB6001	3217-69
MB6002	3217-70
MB7072E	596-27
	3772-77
MB7072N	598-28
	3772-80
MB7117E	3761-8
MB7117H	3761-6
MB7118E	3761-9
MB7118H	3761-7
MB7121E	3762-83
MB7121H	3762-70
MB7122E	3762-87
MB7122H	3762-72
MB7123E	3761-104
MB7123H	3761-93
MB7124E	3761-110
MB7124H	3761-99
MB7127H	3764-20
MB7127Y	3764-8
MB7128E	3764-35
MB7128E-W	3760-3
	3764-36
MB7128H	3764-22
MB7128Y	3760-2
	3764-10
MB7130E	3783-28
MB7130H	3783-29
MB7131E	3763-50
MB7131H	3763-38
MB71324	3763-29
MB7132E	3763-53
MB7132E-W	3760-1
MB7132H	3763-40
MB7132Y	3763-33
MB7134E	3765-110
	3784-55
MB7134H	3765-99
	3784-54
MB7136E	3783-97
MB7136H	3783-96
MB7137E	3765-6
MB7137H	3764-101
MB7138E	3765-9
MB7138E-W	3760-4
	3765-10
	3783-98
MB7138H	3764-104
MB7138YZ	3764-86
MB7141E	3766-7
MB7141H	3766-3
MB7142E	3766-8
MB7142E-W	3766-12
	3784-56
MB7142H	3766-4
MB7143H	3766-69
MB7144E-W	3760-7
MB7144H	3766-70
MB7152-Y	3760-5
MB7152E	3765-100
MB7152E-W	3760-6
MB7152H	3765-111
MB8117-10	3768-60
MB8117-12	3768-67
MB8118-10	3768-61
MB8118-12	3768-68
MB81256-10	3769-127
	3782-4
MB81256-12	3770-1
MB81256-15	3770-9
MB81257-10	3769-128
MB81257-12	3770-2
MB81257-15	3770-10
MB8128-10	3778-14
MB8128-15	3778-74
MB81416-10	3769-21
MB81416-12	3769-22
MB81416-15	3769-23
MB8167A-45	3782-21
MB8167A-55	3782-32
MB8167A-70	3782-46
MB8167A-70W	3782-47
MB8168-45	3781-19
MB8168-70	3781-62
MB8168-70W	3781-63
MB8264-15	3769-61
	¶ 320-15
MB8264-20	3769-90
	¶ 320-15
MB8264A-10	3769-36
	¶ 320-15
MB8264A-12	3769-43
	¶ 320-15
MB8264A-15	3769-62
	¶ 320-15
MB8264A-15W	3769-32
	¶ 320-15
MB8264A-20W	3769-33
	¶ 320-15
MB8265-15	3769-63
MB8265-20	3769-91
MB8265A-10	3769-37
MB8265A-12	3769-44
MB8265A-15	3769-64
MB8266A-10	3769-38
MB8266A-12	3769-45
MB8266A-15	3769-65
MB8281	3769-34
MB83256	3787-60
MB8416	3778-87
MB8416-25W	3779-1
MB8416A-12	3778-19
MB8416A-12L	3778-20
MB8416A-15	3778-50
MB8416A-15L	3778-51
MB8417	3778-88
MB8418	3778-89
MB8795A	1353-59
MB88201	1338-28
	1257-15
MB88202	1338-29
	1257-16
MB88401	1338-30
	1257-17
MB8841	1338-18
	1257-18
MB88411	1338-31
	1257-19
MB88413	1338-32
	1257-20
MB8842	1338-19
	1257-21
MB88421	1338-33
	1257-22
MB88423	1338-34
	1257-23
MB8843	1338-20
	1257-24
MB8844	1338-21
	1257-25
MB8845	1338-22
MB8846	1338-23
MB8847	1338-24
MB8848	1338-25
MB8849	1338-26
MB88501	1338-35
	1257-26
MB88503	1338-36
	1257-27
MB8851	1338-9
	1257-28
MB8851A	1338-10
	1257-29

¶ Indicates page number in Application Note Directory.
★ Indicates additional data is provided on the page noted.

IC MASTER

Fujitsu Microelectronics, Inc. (Cont'd)

Device	Page-Line
MB8851L	1338-11
	1257-30
MB8853	1338-12
	1257-31
MB88535	1338-37
	1257-32
MB88536	1338-38
	1257-33
MB8854	1257-34
MB88541	1338-39
	1257-35
MB8854A	1338-13
	1257-36
MB8854L	1338-14
	1257-37
MB8855	1338-15
MB8857	1338-16
MB8858	1338-17
MB8866	1348-133
	1353-96
MB8868A	2686-82
MB8876	1353-113
MB8876A	1341-133
	1353-97
	¶ 261-9
MB8877A	1341-134
	1353-98
	¶ 261-9
MBL8086	1349-8
	1285-7
MBL8086-1	1349-9
	1285-8
MBL8086-2	1349-10
	1285-9
MBL8088	1349-108
MBL8088-2	1349-109
MBL8089	1349-29
MBL8243	1344-100
MBL8243E	1345-131
MBL8243N	1345-132
MBL8259A	1349-62
MBL8282	1349-94
MBL8283	1349-87
MBL8284A	1349-44
MBL8286	1349-80
MBL8287	1349-73
MBL8288	1349-37
MBL8289	1349-31
MBL82C43	1344-101
MBM100422A-7	599-79
	3772-66
MBM100470	599-86
	3779-39
MBM100470A-10	599-87
	3779-29
MBM100474	599-82
MBM100474-15	3775-60
MBM100474-20	3775-66
MBM100474A-10	3775-57
MBM100480	3782-7
MBM100480-15	3782-5
MBM10415AH	3774-25
MBM10422	3772-69
MBM10422A-7	598-29
	3772-67
MBM10422E	598-30
MBM10422H	598-31
MBM10422N	598-32
	3772-84
MBM10470A-10	598-53
	3779-30
MBM10470A-15	598-54
	3779-37
MBM10470A-20	598-57
	3779-41
MBM10474-15	598-39
	3775-63
MBM10474A-10	3775-58
MBM10480	3782-9
MBM10480-15	3782-6
MBM27128-25	3767-3
MBM27128-30	3767-12
MBM27128-30W	3767-17
MBM2732A-20	3766-31
MBM2732A-25	3766-38
MBM2732A-30	3766-45
MBM2732A-30X	3766-46
MBM2764-20	3766-78
MBM2764-25	3766-88
MBM2764-30	3766-98
MBM2764-30X	3766-99
MBM27C256-20	3767-30
MBM27C256-25	3767-34
MBM27C256-30	3767-39
MBM27C64-25	3766-84
	¶ 319-12
MBM27C64-30	3766-94
	¶ 319-12
MBM27C64-30W	3766-95
	¶ 319-12
MBM8167A-85W	3782-63
MBM8168-85W	3781-83
MBM93419	3771-99

Harris Semiconductor

Device	Page-Line
	4460-21
	4460-22
80C55A	1346-159
80C86	★ 1479
	★ 1486
	1349-3
	★ 1479
	★ 1486
	1285-11
80C88	★ 1480
	1349-110
82C37A	★ 1484
	1346-147
	1349-53
82C52	★ 1482
	★ 1494
	2686-65
	★ 1482
	★ 1494
	1349-70
82C54	★ 1482
	★ 1486
	1349-68
82C55A	★ 1482
	★ 1486
	1349-69
82C59A	★ 1483
	★ 1486
	1349-61
82C82	★ 1484
	★ 1487
	1349-95
82C83	★ 1484
	1349-88
82C84A	★ 1484
	★ 1487
	1349-52
82C84B	1349-45
82C86	★ 1484
	1349-81
82C87	★ 1485
	1349-74
82C88	★ 1485
	★ 1487
	1349-38
82C89	★ 1485
	★ 1487
	1349-32
HA-1608	★ 3392
HA-23080	★ 3464
	3156-9
HA-23551	3232-120
HA-2400	★ 3394
	3156-35
	3180-107
	3196-33
	¶ 295-20
HA-2404	3156-36
	3180-108
	3196-34
HA-2405	3156-37
	3180-109
	3200-22
	¶ 295-20
HA-2420	★ 2955
	3238-13
	¶ 293-12
HA-2425	★ 2955
	3238-14
	¶ 293-12
HA-2500	★ 3396
	3196-31
HA-2502	3200-16
HA-2505	3200-17
HA-2510	★ 3398
	3200-8
	¶ 293-3
HA-2512	3201-19
HA-2515	3201-25
HA-2520	★ 3400
	3176-89
	3200-10
	¶ 293-1
HA-2522	3201-21
HA-2525	3201-27
HA-2539	★ 3402
	3176-65
	3180-162
HA-2539-2	★ 3402
	3197-43
HA-2539-5	★ 3402
	3202-37
HA-2540	★ 3404
	3176-70
	3180-160
HA-2540-2	★ 3404
	3197-42
HA-2540-5	★ 3404
	3202-36
HA-2600	★ 3406
	3193-7
	¶ 293-3
	¶ 295-10
HA-2602	3195-48
HA-2605	3195-49
	¶ 295-10
HA-2620	★ 3408
	3176-45
	3180-148
	3193-37
	¶ 293-1
	¶ 293-2
	¶ 293-3
HA-2622	3180-149
	3195-58
HA-2625	3180-150
	3195-59
HA-2630	★ 3410
	3155-25
HA-2635	3155-26
HA-2640	★ 3412
	3176-123
	3193-39
HA-2645	3176-124
	3198-26
HA-2650	★ 3414
	3206-11
HA-2655	3207-18
HA-2720	★ 3416
	3193-1
HA-2725	3195-29
HA-2730	★ 3419
	3206-68
HA-2735	3206-53
HA-2740	★ 3422
	3210-8
HA-2740-2	★ 3422
	3210-50
HA-2740-5	★ 3422
	3211-27
HA-4156-5	★ 3424
	3211-41
HA-4600-2	★ 3426
	3210-33
HA-4600-5	★ 3426
	3210-34
HA-4602-2	3210-36
HA-4605-5	3211-4
HA-4620-2	★ 3428
	3210-31
HA-4620-5	★ 3428
	3210-32
HA-4622-2	3211-3
HA-4625-5	3211-8
HA-4741-2	★ 3430
	3210-57
HA-4741-5	★ 3430
	3211-45
HA-4900-2	★ 3457
	3162-49
HA-4902-2	3163-1
HA-4905-5	3163-37
HA-5033	★ 3462
	3155-14
HA-5033-2	★ 3462
	3156-75
	3174-41
HA-5033-5	★ 3462
	3156-76
	3174-42
HA-5062-2	★ 3432
	3198-6
HA-5062-5	★ 3432
	3202-30
HA-5062A-5	★ 3432
	3198-7
HA-5062B-5	★ 3432
	3192-47
HA-5064-2	★ 3434
	3212-5
HA-5064-5	★ 3434
	3213-41
HA-5064A-5	★ 3434
	3212-6
HA-5064B-5	★ 3434
	3210-46
HA-5082-2	★ 3436
	3198-11
HA-5082-5	★ 3436
	3202-33
HA-5082A-5	★ 3436
	3198-12
HA-5082B-5	★ 3436
	3192-50
HA-5084-2	★ 3438
	3211-22
HA-5084-5	★ 3438
	3213-31
HA-5084A-5	★ 3438
	3211-23
HA-5084B-5	★ 3438
	3210-22
HA-5100-2	★ 3440
	3186-3
HA-5100-5	★ 3440
	3186-4
HA-5102-2	★ 3459
	3205-39
HA-5102-5	★ 3459
	3205-40
HA-5104-2	★ 3459
	3210-37
HA-5104-5	★ 3459
	3210-38
HA-5105-5	3188-29
HA-5110-2	★ 3442
	3186-2
HA-5110-5	★ 3442
	3186-5
HA-5112	★ 3459
	3180-122
HA-5112-2	★ 3459
	3205-41
HA-5112-5	★ 3459
	3205-42
HA-5114	★ 3459
	3180-123
HA-5114-2	★ 3459
	3210-39
HA-5114-5	★ 3459
	3210-40
HA-5115-5	3188-30
HA-5130-2	★ 3444
	3181-29
HA-5130-5	★ 3444
	3181-31
HA-5135-2	3181-30
HA-5135-5	3181-32
HA-5141	★ 3446
	3199-19
HA-5141A	★ 3446
	3198-32
HA-5142	3180-5
	3209-6
HA-5142A	3208-20
HA-5144	3180-43
HA-5144A	3212-23
HA-5160	★ 3448
	3176-95
	3180-140
HA-5160-2	★ 3448
	3192-23
HA-5160-5	★ 3448
	3192-24
HA-5162	3176-96
	3180-141
HA-5162-5	3202-19
HA-5170-2	★ 3450
	3185-45
HA-5170-5	★ 3450
	3186-8
HA-5180	★ 3452
	3185-17
HA-5180-2	★ 3452
	3192-11
HA-5180-5	★ 3452
	3192-12
HA-5180A	★ 3452
	3185-18
HA-5180A-2	★ 3452
	3185-21
HA-5180A-5	★ 3452
	3185-22
HA-5190	★ 3455
	3176-87
	3197-30
	¶ 294-11
	¶ 297-13
HA-5195	3176-88
	3197-38
	¶ 294-11
	¶ 297-13
HA-5310	3238-15
HA-5320-2	★ 2958
	3238-16
HA-5320-5	★ 2958
	3238-17
HA-OP07	3182-41
HA-OP07A	3181-24
HA-OP07C	3182-57
HA-OP07E	3181-25
HC5116A	3216-109
HC5156A	3216-46
HC5502	★ 3466
	3218-82
HC5504	★ 3467
	3218-83
HC5510	3216-110
HC5511	3216-47
HC5512	★ 3468
	3217-87
HC5512A	★ 3468
	★ 3468
	3217-88
HC5512C	★ 3468
	3217-89
HC55536	★ 3470
	3169-72
	3216-154
HC55564	★ 3469
	3169-73
	3216-155
HCA-Library	★ 4743
HCA-SSI/MSI	★ 4742
HD0165	★ 2979
	2667-4
	¶ 289-9
HD15530-2	★ 1493
	★ 1498
	592-49
	¶ 285-4
	★ 1493
	★ 1498
	2685-96
	¶ 285-4
HD15530-9	★ 1493
	★ 1498
	592-50
	¶ 285-4
	★ 1493
	★ 1498
	2686-1
	¶ 285-4
HD15531-2	592-51
	¶ 285-4
	2686-2
	¶ 285-4
HD15531-9	592-52
	¶ 285-4
	2686-3
	¶ 285-4
HD15531B	★ 1493
	★ 1499
	2686-4
	¶ 285-4
HD4702-2	★ 1492
	592-45
	★ 1492
	2685-35
	★ 1492
	1336-31
HD4702-9	★ 1492
	592-46
	★ 1492
	2685-36
	★ 1492
	1336-32
HD6101-2	★ 1488
	1350-70
HD6101-9	★ 1488
	1350-71
HD6101C-9	★ 1488
	1350-72
HD6120	★ 1489
	1283-24
HD6120-2	★ 1489
	1350-44
HD6120-9	★ 1489
	1350-45
HD6121-2	★ 1489
	1350-63
HD6121-9	★ 1489
	1350-64
HD6402-2	★ 1492
	2686-71
	★ 1492
	1350-79
HD6402-9	★ 1492
	2686-72
	★ 1492
	1350-80
HD6402C-9	★ 1492
	2686-68
	★ 1492
	1350-81
HD6406	★ 1492
	★ 1495
	2686-66
	★ 1492
	★ 1495
	1350-78
HD6408	★ 1492
	★ 1496
	2685-22
HD6408-9	★ 1492
	★ 1496
	592-42
HD6409	★ 1493
	★ 1497
	592-128
	¶ 286-12
HD6409-2	★ 1493
	★ 1497
	2685-93
	¶ 286-12
HD6409-9	★ 1493
	★ 1497
	2685-94
	¶ 286-12
HD6431-2	★ 1490
	579-105
	★ 1490
	1350-55
HD6431-9	★ 1490
	579-106
	★ 1490
	1350-56
HD6432-2	★ 1490
	579-103
	★ 1490
	1350-53
HD6432-9	★ 1490
	579-104
	★ 1490
	1350-54
HD6433-2	★ 1490
	579-107
	★ 1490
	1350-61
HD6433-9	★ 1490
	579-108
	★ 1490
	1350-62
HD6434-2	★ 1490
	1350-59
HD6434-9	★ 1490
	1350-60

Arranged alphanumerically from left to right.

© IC MASTER 1984

Harris Semiconductor (Cont'd)

Device	Page-Line
HD6435-2	1350-57
HD6435-9	1350-58
HD6436-2	★ 1491
	1350-93
HD6436-9	★ 1491
	1350-94
HD6440-2	★ 1491
	580-34
	★ 1491
	1350-95
HD6440-9	★ 1491
	580-35
	★ 1491
	1350-96
HD6495-2	★ 1491
	580-32
	★ 1491
	1350-91
HD6495-9	★ 1491
	580-33
	★ 1491
	1350-92
HD6600-2	638-13
	2662-122
	2683-32
HD6600-5	638-14
	2662-123
	2683-33
HGA-B01500	★ 4741
HGA-B02500	★ 4741
HGA-C00600	★ 4740
	4462-19
	4463-9
HGA-C01200	4462-20
	4463-10
HGA-C02500	4462-21
	4463-11
HGABA01500	4460-37
HGABA03000	4460-38
HI1818A-2	★ 2903
	2623-73
HI1818A-5	★ 2903
	2623-74
HI1828A-2	★ 2903
	2622-109
HI1828A-5	★ 2903
	2622-110
HI200-2	★ 2866
	2615-58
HI200-5	★ 2866
	2615-75
HI201-2	★ 2868
	2616-102
HI201-5	★ 2868
	2616-120
HI201HS-2	★ 2868
	2616-87
HI201HS-5	★ 2868
	2616-88
HI300	★ 2872
	2615-30
HI301	★ 2872
	2617-111
HI302	★ 2872
	2619-112
HI303	★ 2872
	2618-101
HI304	★ 2872
	2615-31
HI305	★ 2872
	2617-112
HI306	★ 2872
	2619-113
HI307	★ 2872
	2618-102
HI381	★ 2877
	2615-32
HI384	★ 2877
	2619-114
HI387	★ 2877
	2617-113
HI390	★ 2877
	2618-103
HI5040-2	★ 2882
	2615-5
HI5040-5	★ 2882
	2615-6
HI5041-2	★ 2882
	2615-67
HI5041-5	★ 2882
	2615-68
HI5042-2	★ 2882
	2618-2
HI5042-5	★ 2882
	2618-3
HI5043-2	★ 2882
	2618-121
HI5043-5	★ 2882
	2618-122
HI5044-2	★ 2882
	2619-101
HI5044-5	★ 2882
	2619-102
HI5045-2	★ 2882
	2620-9
HI5045-5	★ 2882
	2620-10
HI5046-2	★ 2882
	2620-95
HI5046-5	★ 2882
	2620-96
HI5046A-2	★ 2882
	2620-92
HI5046A-5	★ 2882
	2620-93
HI5047-2	★ 2882
	2621-24
HI5047-5	★ 2882
	2621-25
HI5047A-2	★ 2882
	2621-21
HI5047A-5	★ 2882
	2621-22
HI5048-2	★ 2882
	2615-51
HI5048-5	★ 2882
	2615-52
HI5049-2	★ 2882
	2620-3
HI5049-5	★ 2882
	2620-4
HI5050-2	★ 2882
	2617-123
HI5050-5	★ 2882
	2617-124
HI5051-2	★ 2882
	2618-113
HI5051-5	★ 2882
	2618-114
HI506-2	★ 2885
	2624-60
HI506-5	★ 2885
	2624-61
HI506A-2	★ 2885
	2624-77
HI506A-5	★ 2885
	2624-80
HI506L-2	★ 2885
	2624-78
HI506L-5	★ 2885
	2624-81
HI507-2	★ 2885
	2624-9
HI507-5	★ 2885
	2624-10
HI507A-2	★ 2885
	2624-27
HI507A-5	★ 2885
	2624-29
HI507L-2	★ 2885
	2624-34
HI507L-5	★ 2885
	2624-35
HI508-2	★ 2893
	2623-62
HI508-5	★ 2893
	2623-63
HI508A-2	★ 2893
	2623-85
HI508A-5	★ 2893
	2623-87
HI508L-2	★ 2893
	2624-36
HI508L-5	★ 2893
	2624-37
HI509-2	★ 2893
	2622-101
HI509-5	★ 2893
	2622-102
HI509A-2	★ 2893
	2623-4
HI509A-5	★ 2893
	2623-5
HI509L-2	★ 2893
	2623-12
HI509L-5	★ 2893
	2623-13
HI516-2	★ 2907
	2624-68
HI516-5	★ 2907
	2624-69
HI518-2	★ 2910
	2624-19
HI518-5	★ 2910
	2624-20
HI524-2	★ 2913
	2623-15
HI524-5	★ 2913
	2623-16
HI539-2	★ 2917
	2622-118
HI539-5	★ 2917
	2622-119
HI5610-2	★ 2926
	2643-37
	¶ 282-2
HI5610-4	★ 2926
	2643-38
	¶ 282-2
HI5610-5	★ 2926
	2643-39
	¶ 282-2
HI5610-8	★ 2926
	2643-40
	¶ 282-2
HI5618A-2	★ 2929
	2639-8
HI5618A-5	★ 2929
	2639-9
HI5618B-2	★ 2929
	2640-12
HI5618B-5	★ 2929
	2640-13
HI562A-2	★ 2920
	2648-24
	¶ 282-2
HI562A-4	★ 2920
	2650-22
	¶ 282-2
HI562A-5	★ 2920
	2650-23
	¶ 282-2
HI562A-8	★ 2920
	2648-25
	¶ 282-2
HI565AJ	★ 2923
	2650-32
HI565AK	★ 2923
	2648-26
HI565AS	★ 2923
	2650-33
HI565AT	★ 2923
	2648-27
HI5660-2	★ 2950
	2654-47
HI5660-5	★ 2950
	2654-48
HI5660A-2	★ 2950
	2654-49
HI5660A-S	★ 2950
	2654-50
HI5680I-5	★ 2932
	2649-40
HI5680V-5	★ 2932
	2652-7
HI5685I-4	★ 2938
	2649-41
HI5685V-4	★ 2938
	2652-8
HI5687I-2	2649-42
HI5687V-2	2652-9
HI5712-2	★ 2961
	2631-20
	¶ 266-16
	¶ 267-6
HI5712-5	★ 2961
	2631-21
	¶ 266-16
	¶ 267-6
HI5712-7	★ 2961
	2631-22
	¶ 266-16
	¶ 267-6
HI5712-8	★ 2961
	2631-23
	¶ 266-16
	¶ 267-6
HI5712A-2	★ 2961
	2631-24
	¶ 266-16
	¶ 267-6
HI5712A-7	★ 2961
	2631-25
	¶ 266-16
	¶ 267-6
HI5712A-8	★ 2961
	2631-26
	¶ 266-16
	¶ 267-6
HI574AJ	★ 2969
	2634-31
HI574AK	★ 2969
	2635-4
HI574AL	★ 2969
	2635-5
HI574AS	★ 2969
	2634-32
HI574AT	★ 2969
	2635-6
HI574AU	★ 2969
	2635-7
HI5900-2	★ 2975
	3232-130
	¶ 267-6
	¶ 285-8
HI5900-5	★ 2975
	3232-131
	¶ 267-6
	¶ 285-8
HI5901-2	★ 2977
	3233-1
HI5901-5	★ 2977
	3233-2
HI6587	★ 2942
HI674AJ	2634-28
HI674AK	2634-55
HI674AL	2635-1
HI674AS	2634-29
HI674AT	2635-2
HI674AU	2635-3
HI7541J	★ 2953
	2651-12
HI7541K	★ 2953
	2648-29
HI7541S	★ 2953
	2651-13
HI7541T	★ 2953
	2648-30
HIDAC16B	★ 2946
	2658-22
HIDAC16C	★ 2946
	2658-39
HIDAC801	2650-4
HM0104	641-109
HM0168	641-105
HM0186	641-106
HM0198	641-107
HM0410	641-104
HM5-6564-2	★ 3968
	3782-1
	3782-72
HM5-6564-5	★ 3968
	3782-3
	3782-74
HM5-6564-9	★ 3968
	3782-2
	3782-73
HM6100	★ 1488
	1283-25
	¶ 269-4
	¶ 269-5
	¶ 275-18
HM6100-2	★ 1488
	1350-46
	¶ 269-4
	¶ 269-5
	¶ 275-18
HM6100C-9	★ 1488
	1350-47
	¶ 269-4
	¶ 269-5
	¶ 275-18
HM6504-2	★ 3966
	3780-69
HM6504-5	★ 3966
	3780-103
HM6504-8	★ 3966
	3780-70
HM6504-9	★ 3966
	3780-71
HM6504B-2	★ 3966
	3780-46
HM6504B-8	★ 3966
	3780-24
HM6504B-9	★ 3966
	3780-25
HM6504C-9	★ 3966
	3780-72
HM6504S-2	★ 3966
	3780-11
HM6504S-8	★ 3966
	3780-12
HM6504S-9	★ 3966
	3780-13
HM6508	★ 3965
	588-6
HM6508-2	★ 3965
	3774-126
HM6508-5	★ 3965
	3775-24
HM6508-8	★ 3965
	3775-1
HM6508-9	★ 3965
	3775-2
HM6508B-2	★ 3965
	3774-112
HM6508B-8	★ 3965
	3774-113
HM6508B-9	★ 3965
	3774-114
HM6514-2	★ 3966
	3776-101
HM6514-5	★ 3966
	3777-5
HM6514-9	★ 3966
	3776-102
HM6514B-2	★ 3966
	3776-82
HM6514B-8	★ 3966
	3776-83
HM6514B-9	★ 3966
	3776-43
HM6514C-9	★ 3966
	3776-103
HM6514S-2	★ 3966
	3776-23
HM6514S-8	★ 3966
	3776-24
HM6514S-9	★ 3966
	3776-25
HM6516-2	★ 3966
	3778-90
HM6516-5	★ 3966
	3778-91
HM6516-8	★ 3966
	3778-92
HM6516-9	★ 3966
	3778-93
HM65162-2	★ 3966
	3777-124
HM65162-5	★ 3966
	3777-125
HM65162-8	★ 3966
	3777-126
HM65162-9	★ 3966
	3777-127
HM65162B-2	★ 3966
	3777-109
HM65162B-5	★ 3966
	3777-110
HM65162B-8	★ 3966
	3777-111
HM65162B-9	★ 3966
	3777-112
HM65162C-2	★ 3966
	3778-21
HM65162C-8	★ 3966
	3778-22
HM65162C-9	★ 3966
	3777-128
HM65162S-5	★ 3966
	3777-104
HM65162S-9	★ 3966
	3777-105
HM6516B-2	★ 3966
	3778-23
HM6516B-8	★ 3966
	3778-24
HM6516B-9	★ 3966
	3778-25
HM65172-2	★ 3967
	3778-1
HM65172-5	★ 3967
	3778-2
HM65172-8	★ 3967
	3778-3
HM65172-9	★ 3967
	3778-4
HM65172B-2	★ 3967
	3777-113
HM65172B-5	★ 3967
	3777-114
HM65172B-8	★ 3967
	3777-115
HM65172B-9	★ 3967
	3777-116
HM65172C-2	★ 3967
	3778-26
HM65172C-8	★ 3967
	3778-27
HM65172C-9	★ 3967
	3778-5
HM65172S-5	★ 3967
	3777-106
HM65172S-9	★ 3967
	3777-107
HM6518	★ 3965
	588-7
HM6518-2	★ 3965
	3775-7
HM6518-5	★ 3965
	3775-27
HM6518-8	★ 3965
	3775-8
HM6518-9	★ 3965
	3775-9
HM6518B-2	★ 3965
	3774-117
HM6518B-8	★ 3965
	3774-118
HM6518B-9	★ 3965
	3774-119
HM65262	★ 3967
HM6551	★ 3965
	588-24
HM6551-2	★ 3965
	3773-36
HM6551-5	★ 3965
	3773-56
HM6551-8	★ 3965
	3773-37
HM6551-9	★ 3965
	3773-38
HM6551B-2	★ 3965
	3773-10
HM6551B-8	★ 3965
	3773-11
HM6551B-9	★ 3965
	3773-12
HM6561	★ 3965
	588-25
HM6561-2	★ 3965
	3773-31
HM6561-5	★ 3965
	3773-54
HM6561-8	★ 3965
	3773-32
HM6561-9	★ 3965
	3773-33
HM6561B-2	★ 3965
	3773-4
HM6561B-8	★ 3965
	3773-5
HM6561B-9	★ 3965
	3773-6
HM65642	3781-109
HM6611	587-172
HM6616-8	★ 3969
	3765-43

¶ Indicates page number in Application Note Directory.
★ Indicates additional data is provided on the page noted.

IC MASTER

Harris Semiconductor (Cont'd)

Device	Page-Line
HM6641	★ 3969
	587-142
	¶ 319-15
HM6641-2	★ 3969
	3762-55
	¶ 319-15
HM6641-8	★ 3969
	3762-56
	¶ 319-15
HM6641-9	★ 3969
	3762-57
	¶ 319-15
HM6664-2	★ 3969
	3766-73
HM6664-8	★ 3969
	3766-74
HM6664-9	★ 3969
	3766-75
HM7602-2	★ 3943
	3760-50
HM7602-5	★ 3943
	3760-38
HM7603-2	★ 3943
	3760-52
HM7603-5	★ 3943
	3760-44
HM7610-2	★ 3944
	3760-118
HM7610-5	★ 3944
	3760-102
HM7610A-2	★ 3944
	3760-109
HM7610A-5	★ 3944
	3760-78
HM7610B-2	★ 3944
	3760-85
HM7610B-5	★ 3944
	3760-71
HM7611-2	★ 3944
	3760-122
HM7611-5	★ 3944
	3760-107
HM7611A-2	★ 3944
	3760-112
HM7611A-5	★ 3944
	3760-81
HM7611B-2	★ 3944
	3760-88
HM7611B-5	★ 3944
	3760-72
HM76161-2	★ 3951
	3765-36
HM76161-5	★ 3951
	3765-14
HM76161A-5	★ 3951
	3764-120
HM76165-2	★ 3952
	3765-117
HM76165-5	★ 3952
	3765-112
HM7620-2	★ 3945
	3761-78
HM7620-5	★ 3945
	3761-62
HM7620A-2	★ 3945
	3761-63
HM7620A-5	★ 3945
	3761-34
HM7620B-1	★ 3945
	3760-91
HM7620B-5	★ 3945
	3760-74
HM7621-2	★ 3945
	3761-79
HM7621-5	★ 3945
	3761-65
HM7621A-2	★ 3945
	3761-66
HM7621A-5	★ 3945
	3761-37
HM7621B-2	★ 3945
	3760-95
HM7621B-5	★ 3945
	3760-76
HM76321-2	★ 3953
	3766-20
HM76321-5	★ 3953
	3766-9
HM7640-2	★ 3946
	3762-46
HM7640-5	★ 3946
	3762-27
HM7640A-2	★ 3946
	3762-1
HM7640A-5	★ 3946
	3761-107
HM7641-2	★ 3946
	3762-50
HM7641-5	★ 3946
	3762-34
HM7641A-2	★ 3946
	3762-12
HM7641A-5	★ 3946
	3761-116
HM7642-2	★ 3948
	3762-109
HM7642-5	★ 3948
	3762-110
HM7642A-2	★ 3948
	3763-1
HM7642A-5	★ 3948
	3762-93
HM7642B-2	★ 3948
	3762-100
HM7642B-5	★ 3948
	3762-84
HM7643-2	★ 3948
	3762-114
	3763-12
HM7643-5	★ 3948
	3762-115
HM7643A-2	★ 3948
	3763-2
HM7643A-5	★ 3948
	3762-94
HM7643B-2	★ 3948
	3762-104
HM7643B-5	★ 3948
	3762-88
HM7649-2	★ 3947
	3762-42
HM7649-5	★ 3947
	3762-3
HM7649A-2	★ 3947
	3761-124
HM7649A-5	★ 3947
	3761-111
HM76641-2	★ 3954
	3766-72
HM76641-5	★ 3954
	3766-71
HM7681-2	★ 3949
	3763-100
HM7681-5	★ 3949
	3763-76
HM7681A-2	★ 3949
	3763-67
HM7681A-5	★ 3949
	3763-46
HM7685-2	★ 3950
	3764-61
HM7685-5	★ 3950
	3764-52
HM7685A-2	★ 3950
	3764-42
HM7685A-5	★ 3950
	3764-27
HM92560-2	★ 3968
	3775-13
	3782-76
	3782-82
	3782-95
HM92560-5	★ 3968
	3782-78
	3782-92
HM92560-8	★ 3968
	3782-75
	3782-83
	3782-89
	3782-96
HM92560-9	★ 3968
	3782-77
	3782-84
	3782-90
	3782-97
HM92562	★ 3968
HM92570-2	★ 3968
	3782-79
	3782-85
	(Continued)
HM92570-2	3782-91
	3782-98
HM92570-5	★ 3968
	3782-88
	3782-101
HM92570-8	★ 3968
	3782-80
	3782-86
	3782-93
	3782-99
HM92570-9	★ 3968
	3782-81
	3782-87
	3782-94
	3782-100
HPL16LC8-2	4482-35
HPL16LC8-9	4482-36
HPL16RC4-2	4482-37
HPL16RC4-9	4482-38
HPL16RC6-2	4482-39
HPL16RC6-9	4482-40
HPL16RC8-2	4482-41
HPL16RC8-9	4482-42
HPL77153-2	★ 3957
	4482-79
HPL77153-5	★ 3957
	4482-74
HPL77209-2	★ 3958
	4481-72
HPL77209-5	★ 3958
	4480-107
HPL77209/16L8-2	★ 3958
	4481-73
HPL77209/16L8-5	★ 3958
	4480-108
HPL77215/16H8-2	★ 3958
	4481-74
HPL77215/16H8-5	★ 3958
	4480-109
HPL77216/16P8-2	★ 3958
	4481-75
HPL77216/16P8-5	★ 3958
	4480-110
HPL77317-2	★ 3959
	4481-76
HPL77317/16LD8-5	★ 3959
	4480-111
HPL77318-2	★ 3959
	4481-77
HPL77318/16HD8-5	★ 3959
	4480-112
HPL77319-2	★ 3960
	4481-78
HPL77319-5	★ 3960
	4480-113
HPL77320-5	★ 3960
	4481-1
HS15530RH	★ 4660
	2685-95
	★ 4660
	1354-13
HS1840RH	★ 4735
	2624-82
HS3182	★ 4644
	2671-20
	2685-9
HS3273	2685-65
HS3282	★ 4648
	2685-10
HS3516RH	★ 4705
	3193-19
HS3530RH	★ 4709
	3193-12
HS3546RH	★ 4714
	3192-4
HS3604	3167-127
HS3819	★ 4658
	3173-1
	★ 4658
	1353-14
HS4602RH	★ 4721
	3210-35
HS508ARH	★ 4729
	2623-86
HS6504RH	★ 4668
	3780-23
HS6506RH	★ 4675
	3775-22
HS6514RH	★ 4682
	3776-44
HS6551RH	★ 4689
	3773-19
HS6564RH	★ 4696
	3781-124
HV1000	★ 3471
	3173-36
	3234-147
HV1000A	★ 3471
	★ 3471
	3234-148
LF147	3213-13
LF153	3204-51
LF247	3213-14
LF253	3204-52
LF347A	3210-23
LF347B	3211-20
LF353A	3205-17
LF353B	3206-47
LM108	3190-37
LM108A	3186-23
LM118	3193-46
LM143	3176-125
LM308	3199-30
LM308A	3186-51
LM318	3201-37
LM4250	3190-50
LM4250C	3195-31
MP7542S	2654-32
SAJI-IV	★ 4744
	4477-1

Hitachi America, Ltd.

Device	Page-Line
H4701B	3791-106
HA1108	3170-27
HA11211	3167-155
HA11215	3172-101
HA11219	3168-113
HA11220	3172-102
HA11221	3172-103
HA11223	3168-126
HA11225	3168-57
HA11226	3164-48
HA11227	3168-127
HA11229	3171-150
HA11235	3171-64
HA11238	3172-104
HA1124	3171-151
HA11244	3171-65
HA11247	3170-113
HA1125	3171-152
HA11251	3167-156
HA1126	3170-28
HA1137	3168-58
HA11405	3172-105
HA11409	3166-163
	3170-114
HA11412	3170-115
HA11417	3170-116
HA1151	3167-107
HA1156	3168-128
HA11580	3170-117
HA11701	3170-11
HA11702	3170-18
HA11703	3170-9
HA11704	3170-2
HA11705	3170-3
HA11706	3170-4
HA11707	3170-19
HA1196	3168-129
HA1197	3167-108
HA1199	3167-109
HA12001	3169-131
HA12002	3173-83
HA12005	3169-133
HA12006	3169-119
HA1201	3168-36
HA12010	2661-26
HA12011	2661-27
HA12012	3165-156
HA12017	3165-117
HA1211	3168-37
HA12402	3167-157
HA12404	3167-152
HA12405	3167-153
HA12411	3168-59
HA1319	3164-12
HA1325	3164-80
HA1329	3164-81
HA1361	3164-13
HA1364	3171-153
HA1366	3164-136
HA1368	3164-137
HA1371	3164-138
HA1372	3164-139
HA1374	3165-68
HA1377	3165-85
HA1388	3165-22
HA1389	3164-140
HA1392	3165-23
HA1406	3165-118
HA1452W	3165-157
HA1457	3165-119
HA17741	3198-44
HA17805P	3221-112
HA17806P	3222-68
HA17808	3222-115
HA17812P	3223-120
HA17815P	3224-86
HA17818P	3225-5
HA17824P	3225-112
HA17902	3180-6
HA1902	2684-31
HC42022	3167-10
HC42030	3167-11
HC43032	3167-12
HC43802	3167-13
HC43803	3167-14
HC43850	3167-7
HD00171	599-94
HD100101	599-56
HD100102	599-59
HD100107	599-62
HD100112	599-38
HD100114	600-8
HD100117	599-50
HD100118	599-53
HD100122	599-21
HD100123	599-41
HD100124	599-111
HD100125	599-113
HD100130	599-65
HD100131	599-44
HD100136	599-28
HD100141	599-108
HD100142	599-70
HD100145	599-75
HD100150	599-67
HD100151	599-47
HD100155	599-97
HD100156	599-103
HD100158	599-105
HD100160	600-5
HD100163	599-91
HD100164	599-100
HD100165	599-130
HD100166	599-17
HD100170	599-31
HD100179	599-9
HD100181	599-12
HD100474	3775-70
HD100474-1	3775-61
HD10101	597-64
HD10102	597-35
HD10104	596-141
HD10105	597-56
HD10106	597-28
HD10107	597-105
HD10109	597-48
HD10110	596-153
HD10111	597-13
HD10116	598-138
HD10117	597-85
HD10118	597-71
HD10119	597-78
HD10121	597-92
HD10124	598-116
HD10125	598-108
HD10130	597-112
HD10131	596-110
HD10132	597-126
HD10133	597-138
HD10134	597-120
HD10136	596-53
HD10145	598-5
	3770-76
HD10147	598-15
	3771-110
HD10148	598-9
	3771-75
HD10160	599-3
HD10161	596-77
HD10162	596-69
HD10164	598-86
HD10165	598-163
HD10174	598-66
HD10175	597-151
HD10179	596-4
HD10180	596-11
HD10181	596-24
HD10209	597-49
HD10210	596-154
HD10211	597-14
HD10230	597-113
HD10231	596-111
HD103461	2684-57
HD14001B	585-33
HD14002B	584-141
HD14006B	591-163
HD14007UB	573-146
HD14008B	571-35
HD14009B	572-73
HD14010B	572-118
HD14011B	583-71
HD14012B	582-172
HD14013B	580-45
HD14014B	591-126
HD14015B	590-51
	3789-71
HD14016B	2617-48
HD14017B	576-17
HD14018B	577-141
HD14020B	575-127
HD14021B	591-13
	3790-55
HD14022B	578-16
HD14023B	583-19
HD14024B	575-50
HD14025B	584-182
HD14027B	582-12
HD14028B	578-29
HD14032B	571-17
HD14034B	591-34
	3790-22
HD14035B	590-151
	3789-38
HD14038B	571-5
HD14040B	575-90
HD14042B	586-49
HD14043B	586-105
HD14044B	586-84
HD14046B	592-87
HD14049UB	572-89
HD14050B	572-133
HD14051B	2623-32
HD14052B	2622-77
HD14053B	2619-56
HD14066B	2617-26
HD14068B	583-131
HD14069B	573-186
HD14070B	585-117
HD14071B	584-81
HD14072B	584-31
HD14073B	582-83
HD14075B	584-48
HD14076B	580-93
HD14077B	585-171
HD14078B	585-88
HD14081B	582-121
HD14082B	582-66
HD14093B	593-88
HD14094B	591-50
HD14099B	587-48
HD14160	576-98
HD14161B	574-81
HD14162B	576-58
HD14163B	574-46
HD14174B	580-157
HD14175B	580-129
HD14194B	590-97
HD14501UB	586-1
HD14502B	572-59
HD14503B	573-39
HD14505B	587-137
	3771-82
HD14506B	583-196
HD14508B	586-25
HD14510B	576-137
HD14511B	579-174
	2662-43
HD14512B	588-186
HD14514B	579-22
HD14515B	579-23
HD14516B	574-125
HD14517B	590-80
HD14518B	577-21

Arranged alphanumerically from left to right.

© IC MASTER 1984

Hitachi America, Ltd. (Cont'd)

Device	Page-Line
HD14519B	583-174
	588-155
HD14520B	575-3
HD14521B	590-40
HD14522B	576-195
HD14524B	588-41
	3783-2
HD14526B	574-181
HD14527B	593-14
HD14528B	589-94
HD14530B	585-192
HD14531B	595-27
HD14532B	595-5
HD14534B	577-106
HD14536B	590-4
HD14537	587-147
HD14537B	3772-4
HD14538B	589-123
HD14539B	588-53
HD14541B	589-176
HD14543B	579-130
HD14549B	592-134
HD14552B	587-164
	3771-71
HD14553B	577-67
HD14555B	578-77
HD14557B	592-16
HD14558B	578-69
HD14559B	592-129
HD14560B	571-1
HD14561B	572-6
HD14566B	577-131
HD14568B	577-136
HD14569B	578-17
HD14572UB	586-5
HD14580B	587-97
HD14581B	571-76
HD14582B	571-90
HD14583B	593-32
HD14584B	593-124
HD14585B	571-106
HD26501	1342-136
HD268T26	638-89
	2676-2
HD2904	2668-23
HD2905	2672-25
HD2912	2682-162
HD2915	2672-24
HD2916	2682-163
HD2919	2680-130
HD2923	2682-136
HD38510	3166-27
HD38513	3166-28
HD38546	3166-29
HD38550	3166-30
HD38560	3166-31
HD38570	3166-32
HD38580	3166-33
HD38585	3166-34
HD38980	3166-75
HD38991C	3166-76
HD43115	3166-77
HD43890	3166-78
HD44007	3170-52
HD44010	3166-123
HD4470	1338-105
	1257-38
HD44790	1338-106
	1259-1
HD61J	4463-26
HD61K	4463-27
HD61L	4463-28
HD6301	1271-3
HD6303	1342-62
	1271-4
HD6333	1271-5
HD63L05	1271-6
HD6800	1342-94
	1271-7
HD68000	1351-88
HD68000-10	1351-89
HD68000-4	1351-90
HD68000-6	1351-91
HD68000-8	1351-92
HD68000R-10	1285-12
HD68000R-4	1285-13
HD68000R-6	1285-14
HD68000R-8	1285-15
HD6801	1342-31
	1271-8
HD6802	1342-63
	1271-9
HD6803	1342-18
	1271-10
HD6805	1342-32
	1271-11
HD6808	1342-82
HD6809	1342-74
	1271-12
HD6809E	1271-13
HD6821	1343-41
HD6840	1343-69
HD6843	1343-9
HD6844	1342-163
HD6845	1342-145
HD68450	1351-121
HD6850	1342-119
HD6852	1343-106
HD68A00	1342-95
HD68A09	1342-75
HD68A21	1343-42
HD68A40	1343-70
HD68A43	1343-10
HD68A44	1342-164
HD68A45	1342-146
HD68A50	1342-120
HD68A52	1343-107
HD68B00	1342-96
HD68B09	1342-76
HD68B21	1343-43
HD68B40	1343-71
HD68B44	1342-165
HD68B45	1342-147
HD68P01	1271-14
HD68P05	1271-15
HD7400	621-153
HD7401	621-81
HD7402	624-46
HD7403	621-82
HD7404	607-44
HD7405	606-121
HD7406	614-72
HD7407	614-49
HD7408	619-83
HD7409	619-46
HD7410	620-124
HD74107	617-103
HD7412	620-101
HD74121	630-99
HD74123	630-162
HD74125	605-163
HD74126	605-139
HD7413	637-130
HD74132	638-19
HD74136	624-129
HD7414	638-54
HD74141	2662-88
HD74145	612-51
HD74147	639-112
HD74148	639-29
HD74150	630-78
HD74151	629-149
HD74153	628-30
HD74154	613-110
HD74155	613-14
HD74156	612-165
HD74157	629-2
HD74159	613-129
HD7416	614-60
HD74160	610-25
HD74161	607-184
HD74162	610-74
HD74163	608-45
HD74164	632-24
	3790-87
HD74166	632-99
	3790-40
HD7417	614-39
HD74173	615-123
HD74174	615-150
HD74175	615-40
HD74176	609-173
HD74177	607-126
HD74180	639-69
HD74182	604-76
HD74190	611-73
HD74191	609-32
HD74192	611-35
HD74193	609-83
HD74194	631-152
	3788-73
HD74195	631-45
	3788-114
HD74196	609-174
HD74198	632-58
	3789-113
HD74199	632-66
	3789-114
HD7420	620-40
HD7422	620-3
HD74221	630-140
HD7423	623-146
HD7425	623-136
HD74251	630-31
HD7426	613-165
HD7427	623-175
HD74279	625-132
HD74283	605-74
HD74290	609-129
HD74293	608-107
HD7430	622-23
HD7432	623-80
HD7437	621-39
HD7438	620-183
HD7440	619-150
HD7442A	612-74
HD7443A	612-14
HD7444A	612-7
HD7445	612-41
HD7446A	2662-24
HD7447A	2661-161
HD7450	622-99
HD7451	622-118
HD7453	623-33
HD7454	623-22
HD7460	622-160
HD7472	617-9
HD7473	617-104
HD7474	614-155
HD7475	625-85
HD7476	617-159
HD7483A	605-75
HD7485	603-49
HD7486	624-156
HD7489	3771-34
HD7490A	609-130
HD7491A	632-139
HD7492A	611-114
HD7493A	608-108
HD7495A	631-85
	3788-74
HD7496	632-2
	3789-84
HD74ALS00	621-162
HD74ALS01	621-98
HD74ALS03	621-99
HD74ALS08	619-91
HD74ALS09	619-52
HD74ALS109	617-50
HD74ALS20	620-49
HD74ALS21	618-120
HD74ALS74	614-163
HD74H183	603-172
HD74LS00	621-192
HD74LS01	621-118
HD74LS02	624-86
HD74LS03	621-119
HD74LS04	607-83
HD74LS05	606-144
HD74LS08	619-121
HD74LS09	619-61
HD74LS10	620-156
HD74LS107	617-131
HD74LS109	617-66
HD74LS11	618-177
HD74LS112	618-60
HD74LS113	618-15
HD74LS114	618-91
HD74LS12	620-110
HD74LS122	630-129
HD74LS123	630-172
HD74LS13	637-143
HD74LS132	638-32
HD74LS136	624-136
HD74LS138	613-59
HD74LS139	612-140
HD74LS14	638-67
HD74LS145	612-60
HD74LS148	639-49
HD74LS15	618-156
HD74LS151A	629-170
HD74LS152	630-14
HD74LS153	628-54
HD74LS154	613-124
HD74LS155	613-23
HD74LS156	612-175
HD74LS157	629-33
HD74LS158	628-141
HD74LS160A	610-55
HD74LS161A	608-23
HD74LS162A	610-103
HD74LS163A	608-68
HD74LS164	632-42
	3790-88
HD74LS170	627-16
HD74LS174	615-172
HD74LS175	615-59
HD74LS181	604-49
HD74LS190	611-94
HD74LS191	609-58
HD74LS192	611-59
HD74LS193	609-105
HD74LS194A	631-170
	3788-75
HD74LS195A	631-63
	3788-115
HD74LS197	607-150
HD74LS20	620-73
HD74LS21	618-135
HD74LS22	620-18
HD74LS221	630-146
HD74LS240	633-165
HD74LS241	634-39
	2669-6
HD74LS242	633-102
	2675-53
HD74LS243	633-103
	2678-15
HD74LS244	634-91
	2669-7
HD74LS245	635-108
	2678-16
HD74LS247	2661-162
HD74LS248	2661-118
HD74LS249	2661-91
HD74LS251	630-49
HD74LS253	628-5
HD74LS257	628-175
HD74LS258	628-102
HD74[illegible]9	626-28
HD74LS26	621-22
HD74LS266	625-34
HD74LS27	624-8
HD74LS273	616-74
HD74LS279	625-139
HD74LS280	639-90
HD74LS283A	605-94
HD74LS290	609-146
HD74LS293	608-125
HD74LS298	629-89
HD74LS299	633-4
HD74LS30	622-43
HD74LS32	623-107
HD74LS365A	606-56
HD74LS367A	606-57
	614-103
HD74LS368	607-10
HD74LS37	621-56
HD74LS373	626-69
HD74LS374	616-126
HD74LS375	625-96
HD74LS38	621-5
HD74LS386	624-182
HD74LS393	608-86
HD74LS40	619-173
HD74LS42	612-95
HD74LS47	2661-163
HD74LS48	2661-119
HD74LS49	2661-92
HD74LS490	610-131
HD74LS51	622-137
HD74LS54	623-41
HD74LS55	622-173
HD74LS668	611-10
HD74LS669	609-10
HD74LS670	627-29
	3770-44
HD74LS73	617-132
HD74LS74A	615-14
HD74LS75	625-97
HD74LS76	617-172
HD74LS77	625-118
HD74LS78	617-87
HD74LS83A	605-95
HD74LS85	603-50
HD74LS86	624-183
HD74LS91	632-149
HD74LS92	611-125
HD74LS93	608-126
HD74LS95B	631-100
HD74S00	622-10
HD74S02	624-109
HD74S03	621-141
HD74S04	607-98
HD74S05	606-159
HD74S10	620-171
HD74S11	619-35
HD74S112	618-73
HD74S113	618-30
HD74S114	618-105
HD74S12	620-119
HD74S133	622-82
HD74S134	622-64
HD74S135	624-122
HD74S138	613-74
HD74S139	612-154
HD74S140	613-135
	2670-41
HD74S15	618-170
HD74S151	629-187
HD74S157	629-48
HD74S158	628-156
HD74S174	615-187
HD74S175	615-74
HD74S181	604-64
HD74S182	604-99
HD74S189	3770-109
HD74S20	620-88
HD74S22	620-31
HD74S251	630-62
HD74S257	628-189
HD74S258	628-118
HD74S280	639-100
HD74S289	3770-101
HD74S390	610-132
HD74S40	619-188
HD74S51	622-151
HD74S64	623-61
HD74S65	623-70
HD74S74	615-29
HD74S86	625-15
HD75107A	2673-23
HD75108A	2673-30
HD75109	2671-5
HD75110	2671-11
HD75154	2672-27
HD75188	2668-50
HD75189	2672-36
HD75450A	2681-69
HD75451A	2681-70
HD75452	2681-123
HD75453	2682-26
HD75454	2681-156
HIT	4463-29
HM100415	3774-20
HM100422	3772-78
HM100470	3779-44
HM100470-1	3779-35
HM100480	3782-8
HM10414	3772-9
HM10414-1	3772-6
HM10422	3772-79
HM10422-6	3772-65
HM10422-7	3772-68
HM10470	3779-48
HM10470-1	3779-32
HM10480	3782-10
HM2106	598-20
HM2110	598-40
	3774-45
HM2110-1	3774-32
HM2110-2	3774-26
HM2112	598-41
	3774-15
HM2112-1	3774-8
HM2120	598-33
HM2140	598-58
HM2142	598-59
	3779-31
HM2148	3774-95
HM2148-3	3775-104
HM2504	3772-37
HM2504-1	3772-26
HM2510	3774-98
HM2510-1	3774-64
HM2510-2	3774-49
HM2511	3774-102
HM2511-1	3774-68
HM4315	3780-111
HM4334-3	3776-104
HM4334-4	3777-11
HM435101	588-26
HM435101-1	3773-81
HM46810	3771-127
HM468A10	3771-121
HM4716A-1	3768-75
HM4716A-2	3768-86
HM4716A-3	3768-103
HM4716A-4	3769-6
HM472114-3	3776-123
HM472114-4	3777-27
HM472114A-1	3776-31
HM472114A-2	3776-58
HM4816A-7	3768-80
HM4847	3779-115
HM4847-2	3779-71
HM4847-3	3779-85
HM4864-1	3769-46
HM4864-2	3769-66
HM4864-3	3769-92
HM4864A-12	3769-47
HM4864A-15	3769-67
HM4864A-20	3769-93
HM4865A-12	3769-48
HM4865A-15	3769-68
HM4865A-20	3769-94
HM50256-12	★ **3970**
	3770-3
HM50256-15	★ **3970**
	3770-11
HM50256-20	★ **3970**
	3770-16
HM50257-12	★ **3971**
	3770-4
HM50257-15	★ **3971**
	3770-12
HM50257-20	★ **3971**
	3770-17
HM6116-10	3778-10
HM6116-15	3778-52
HM6116-2	3778-28
HM6116-20	3778-94
HM6116-3	3778-53
HM6116-4	3778-95
HM6116L-2	3778-29
HM6116L-4	3778-96
HM6117-3	3778-54
HM6117-4	3778-97
HM6147	3779-108
HM6147-3	3779-78
HM6147-45	3779-67
HM6147-55	3779-79
HM6147-6	3780-4
HM6147H-35	3779-55
HM6147L	3779-109
HM6148	3775-123
HM6148-35	3775-80
HM6148-45	3775-87
HM6148-55	3775-103
HM6148-6	3776-16
HM6148L	3775-124
HM6167	3782-41
HM6167-45	3782-16
HM6167-55	3782-25
HM6167-6	3782-55
HM6167-8	3782-64
HM6167L-6	3782-56
HM6167L-8	3782-65
HM6168-45	★ **3972**
	3781-5
HM6168-55	★ **3972**
	3781-22
HM6168-70	★ **3972**
	3781-44
HM6168H-45	★ **3972**
	3781-6
HM6168H-55	★ **3972**
	3781-23
HM6168H-70	★ **3972**
	3781-45
HM6264-10	★ **3973**
	3781-99
HM6264-12	★ **3973**
	3781-104
HM6264-15	★ **3973**
	3781-110
HM74LS170	3770-29

¶ Indicates page number in Application Note Directory.
★ Indicates additional data is provided on the page noted.

IC MASTER

Hitachi America, Ltd. (Cont'd)

Device	Page-Line
HM8416A-3	3768-62
HM8416A-4	3768-69
HMCS42	1338-107
	1259-2
HMCS42C	1259-3
HMCS43	1338-108
	1259-4
HMCS43C	1338-109
	1259-5
HMCS44A	1338-110
	1259-6
HMCS44C	1338-111
	1259-7
HMCS45A	1338-112
	1259-8
HMCS45C	1338-113
	1259-9
HMCS46C	1338-114
	1259-10
HMCS47C	1338-115
	1259-11
HMSC42C	1338-116
HN24084S	3764-111
HN25044	3762-101
HN25045	3762-105
HN25084	3765-11
HN25084S	3764-112
HN25085	3765-13
HN25085S	3764-121
HN25089S	3763-47
HN25168S	3765-12
HN25169S	3765-15
HN26C64-20	3766-79
HM27C64-20	★ **3974**
	3766-76
HM27C64-25	★ **3974**
	3766-85
HM27C64-30	★ **3974**
	3766-96
HN43128	3787-44
	3787-45
HN462532	3766-58
HN462716	3765-74
HN462716-2	3765-62
HN462732	3766-59
HN46830	3783-69
HN472632A-30	3766-47
HN48016	3758-78
HM4827128-25	★ **3975**
	3766-127
	3767-4
HM4827128-30	★ **3975**
	3767-8
	3767-13
HM4827128-45	★ **3975**
	3767-18
	3767-24
HN482732A-20	3766-32
HN482732A-25	3766-39
HN482732A-30	3766-48
HN482764-3	3766-89
HN482764-4	3766-110
HN61256	3787-101
	3787-102
HN613128	3786-127
HN613256	3787-61
HN61364	3786-37
HN61365	3786-32
HN61366	3786-33
HN62301	3787-105
SAS560	3173-100
SAS570	3173-101
TBA800	3164-141
TBA810	3164-142
TDA2002	3164-143

Holt Inc.

Device	Page-Line
HI3100	★ **4745**
	4468-3
HI3300	★ **4745**
	4468-4
HI3600	★ **4745**
	4468-1
HI3700	★ **4745**
	4474-7
HI3900	★ **4745**
	4468-2
HI7000	3167-43
HI7020	3167-45
HI8000	1351-147
	1355-45

Hybrid Systems

Device	Page-Line
ADC541B-8	2626-11
ADC541C-8	2626-12
ADC542B-8	2626-13
ADC542C-8	2626-14
ADC581B-12	2632-29
ADC581C-12	2632-30
ADC582B-12	2631-55
ADC582C-12	2632-1
DAC3120B-0	2655-45
DAC3120C-0	2655-46
DAC331B-10	2644-47
DAC331B-12	2651-47
DAC331B-14	2657-35
DAC331B-8	2641-41
DAC331C-10	2644-48
DAC331C-12	2651-48
DAC331C-14	2657-36
DAC331C-8	2641-42
DAC335B-12	2651-27
DAC335C-12	2651-28
DAC336B-1	2642-1
DAC336B-12	2652-14
DAC336B-8	2641-53
DAC336C-12	2652-15
DAC336C-8	2641-54
DAC337B-0	2642-2
DAC337B-2	2642-3
DAC337B-3	2645-17
DAC337B-4	2645-4
DAC337B-5	2645-5
DAC337B-6	2642-17
DAC337B-7	2645-18
DAC337C-0	2642-4
DAC337C-1	2642-5
DAC337C-2	2642-6
DAC337C-3	2645-19
DAC337C-4	2645-6
DAC337C-5	2645-7
DAC337C-6	2642-18
DAC337C-7	2645-20
DAC338B-12-0	★ **2983**
	2655-48
DAC338B-12-1	★ **2983**
	2654-38
DAC338B-12-2	★ **2983**
	2651-46
DAC345I-10	2655-47
DAC345I-12	2651-45
DAC345V-10	2655-50
DAC345V-12	2652-25
DAC347LPB-10B	2644-54
DAC347LPB-10U	2645-1
DAC347LPB-12U	2652-50
DAC347LPC-10B	2645-2
DAC347LPC-10U	2645-3
DAC347LPC-12B	2653-1
DAC347LPC-12U	2653-2
DAC348B-10	2644-52
DAC348B-12	2652-45
DAC348C-10	2644-53
DAC348C-12	2652-46
DAC349B-12	2652-47
DAC349B-3D	2657-8
DAC349C-12	2652-48
DAC349C-3D	2657-9
DAC356B-12	2653-16
DAC356C-12	2653-17
DAC356LPB-12	2653-18
DAC356LPC-12	2653-19
DAC370B-16	2658-11
DAC370B-18	2659-45
DAC370C-16	2658-12
DAC370C-18	2659-46
DAC377-18	★ **2984**
	2659-49
DAC377B-18	★ **2984**
	2659-50
DAC377C-18	★ **2984**
	2659-51
DAC391B-12	2649-7
DAC391C-12	2649-8
DAC392B-12	2650-40
DAC392C-12	2650-41
DAC397B-12	2649-9
DAC397C-12	2649-10
DAC9331-14	★ **2984**
	2657-31
DAC9331-16-4	★ **2984**
	2658-49
DAC9331-16-5	★ **2984**
	2658-23
DAC9331-16-6	★ **2984**
	2658-13
DAC9349-12	2652-49
DAC9349-3D	2657-10
DAC9356	★ **2986**
	2653-6
DAC9377-16-4	★ **2984**
	2655-51
DAC9377-16-5	★ **2984**
	2654-41
DAC9377-16-6	★ **2984**
	2658-19
DAC9377-4D	★ **2984**
	2657-17
HAC347LPB-12B	2653-3
HS2020	3156-39
HS3020B	2641-49
HS3020C	2641-50
HS3120B-2	2651-41
HS3120C-2	2651-42
HS3140B-3	★ **2985**
	2657-47
HS3140B-4	★ **2985**
	2657-32
HS3140C-3	★ **2985**
	2657-48
HS3140C-4	★ **2985**
	2657-33
HS3160B-3	★ **2985**
	2659-29
HS3160B-4	★ **2985**
	2658-47
HS3160C-3	★ **2985**
	2659-30
HS3160C-4	★ **2985**
	2658-48
HS3860B	2652-18
HS3860C	2652-19
HS5131B	2628-5
HS5131C	2628-6
HS5210B	★ **2982**
	2635-19
HS5210C	★ **2982**
	2635-20
HS5211B	★ **2982**
	2635-21
HS5211C	★ **2982**
	2635-22
HS5212B	★ **2982**
	2635-23
HS5212C	★ **2982**
	2635-24
HS5213B	★ **2982**
	2635-25
HS5213C	★ **2982**
	2635-26
HS5214B	★ **2982**
	2635-27
HS5214C	★ **2982**
	2635-28
HS5215B	★ **2982**
	2635-29
HS5215C	★ **2982**
	2635-30
HS5216B	★ **2982**
	2635-31
HS5216C	★ **2982**
	2635-32
HS5250B	2634-51
HS5250C	2633-49
HS5251B	2634-52
HS5251C	2633-50
HS5252B	2634-53
HS5252C	2633-51
HS5253B	2634-54
HS5253C	2633-52
HS574J	★ **2981**
	2630-16
HS574K	★ **2981**
	2632-26
HS574L	★ **2981**
	2632-27
HS574S	★ **2981**
	2630-17
HS574T	★ **2981**
	2634-26
HS574U	★ **2981**
	2634-27
HS7541-4	2651-11
HS7541B-1	2653-49
HS7541B-2	2651-6
HS7541C-1	2653-50
HS7541C-2	2651-7
HS9338-0	★ **2983**
	2655-49
HS9338-1	★ **2983**
	2654-39
HS9338-2	★ **2983**
	2652-17
HS9410J	★ **2981**
	3233-35
HS9410K	★ **2981**
	3233-36
HS9410S/B	★ **2981**
	3233-37
HS9410T	★ **2981**
	3233-38
HS9516-4	★ **2982**
	2636-21
HS9516-5	★ **2982**
	2636-27
HS9516-6	★ **2982**
	2636-39
HSADC82	2626-32
HSADC85B	★ **2983**
	2631-11
HSADC85C	★ **2983**
	2631-12
HSDAC80CBI-I	2651-21
HSDAC80CBI-V	2651-32
HSDAC87BI/V	★ **2986**
	2651-22
HSDAC87CI/V	★ **2986**
	2651-23
HSREF01	3237-52
R675B-1	3237-53
R675B-3	3237-108
R675B-4	3237-54
R675B-5	3237-55
R675C-1	3237-56
R675C-3	3237-109
R675C-5	3237-57

Inmos Corporation

Device	Page-Line
IAMS1420-70L	3781-64
IMS1400-10L	★ **3977**
	3782-70
IMS1400-35	★ **3977**
	3782-14
IMS1400-45	★ **3977**
	3782-22
IMS1400-55	★ **3977**
	3782-33
IMS1400-55M	★ **3977**
	3782-34
IMS1400-70L	★ **3977**
	3782-48
IMS1400-70M	★ **3977**
	3782-49
IMS1400L	★ **3977**
	3782-50
IMS1420-10L	★ **501**
	★ **3978**
	3781-95
IMS1420-45	★ **501**
	★ **3978**
	3781-20
IMS1420-55	★ **501**
	★ **3978**
	3781-40
IMS1420-55M	★ **501**
	★ **3978**
	3781-41
IMS1420-70M	★ **501**
	★ **3978**
	3781-65
IMS1420L	★ **501**
	★ **3978**
	3781-66
IMS1421-40	3781-4
IMS1421-50	3781-21
IMS2600-10	★ **3979**
	3769-39
IMS2600-12	★ **3979**
	3769-49
IMS2600-15	★ **3979**
	3769-69
IMS2620-10	★ **3979**
	3768-66
IMS2620-12	★ **3979**
	3768-79
IMS2620-15	★ **3979**
	3768-99
IMS2630-12	★ **3980**
	3768-49
IMS2630-15	★ **3980**
	3768-50
IMS2630-20	★ **3980**
	3768-51
IMS3630	★ **3981**
IMSP100	1349-24
	1352-13
	1352-35
IMSP200	1349-25
	1352-14
	1352-36
IMSP600	1349-26
	1352-15
	1352-37
Occam	★ **1913**
	1349-27
	1352-16
	1352-38
T424	1289-8
T4242	1352-77
Transputer	1352-78

Integrated Device Technology

Device	Page-Line
IDT1681L100	★ **3993**
IDT1681L45	★ **3993**
IDT1681L55	★ **3993**
IDT1681L70	★ **3993**
IDT1681L85	★ **3993**
IDT1681S100	★ **3993**
IDT1681S45	★ **3993**
IDT1681S55	★ **3993**
IDT1681S85	★ **3993**
IDT6116L120	★ **3982**
	3778-30
	3778-31
IDT6116L150	★ **3982**
	3778-55
	3778-56
IDT6116L90	★ **3982**
	3778-6
	3778-7
IDT6116S120	★ **3982**
	3778-32
	3778-33
IDT6116S150	★ **3982**
	3778-57
	3778-58
IDT6116S70	★ **3982**
	3777-117
IDT6116S90	★ **3982**
	3778-8
	3778-9
IDT6167L100	★ **3988**
	3782-68
	3782-69
IDT6167L45	★ **3988**
	3782-17
IDT6167L55	★ **3988**
	3782-26
IDT6167L70	★ **3988**
	3782-42
IDT6167L85	★ **3988**
	3782-57
IDT6167S100	★ **3988**
	3782-66
IDT6167S45	★ **3988**
	3782-18
IDT6167S55	★ **3988**
	3782-28
	3782-29
IDT6167S70	★ **3988**
	3782-43
IDT6167S85	★ **3988**
	3782-59
IDT6168L100	★ **3993**
	3781-84
	3781-85
IDT6168L45	★ **3993**
	3781-7
	3781-8
IDT6168L55	★ **3993**
	3781-24
	3781-25
IDT6168L70	★ **3993**
	3781-46
	3781-47
IDT6168L85	★ **3993**
	3781-71
	3781-72
IDT6168S100	★ **3993**
	3781-86
IDT6168S45	★ **3993**
	3781-9
	3781-10
IDT6168S55	★ **3993**
	3781-26
	3781-27
IDT6168S70	★ **3993**
	3781-48
	3781-49
IDT6168S85	★ **3993**
	3781-73
	3781-74
IDT71681L100	★ **3993**
	3781-87
	3781-88
IDT71681L45	★ **3993**
	3781-11
	3781-12
IDT71681L55	★ **3993**
	3781-28
	3781-29
IDT71681L70	★ **3993**
	3781-50
	3781-51
IDT71681L85	★ **3993**
	3781-75
	3781-76
IDT71681S100	★ **3993**
	3781-89
	3781-90
IDT71681S45	★ **3993**
	3781-13
	3781-14
IDT71681S55	★ **3993**
	3781-30
	3781-31
IDT71681S70	★ **3993**
	3781-52
	3781-53
IDT71681S85	★ **3993**
	3781-77
	3781-78
IDT71682L100	★ **3993**
	3781-91
	3781-92
IDT71682L45	★ **3993**
	3781-15
IDT71682L55	3781-32
	3781-33
IDT71682L70	★ **3993**
	3781-54
	3781-55
IDT71682L85	★ **3993**
	3781-79
	3781-80
IDT71682S100	★ **3993**
	3781-93
	3781-94
IDT71682S45	★ **3993**
	3781-16
IDT71682S55	★ **3993**
	3781-34
	3781-35
IDT71682S70	★ **3993**
	3781-56
	3781-57
IDT71682S85	★ **3993**
	3781-81
	3781-82
IDT71862L55	★ **3993**
IDT7216	★ **4012**
	571-163
IDT7217	★ **4012**
	571-164
IDT74M464-55	3782-27
IDT7M164-100	★ **4008**
	3782-103
IDT7M164-100C	★ **4008**
	3782-104
IDT7M164-120	★ **4008**
	3782-106

Arranged alphanumerically from left to right.

© IC MASTER 1984

Integrated Device Technology (Cont'd)

Device	Page-Line
IDT7M164-120C	★ 4008
	3782-107
IDT7M164-150	★ 4008
	3782-109
IDT7M164-150C	★ 4008
	3782-110
IDT7M164-70	★ 4008
	3782-102
IDT7M464-100C	★ 4004
	3782-67
IDT7M464-65	★ 4004
	3782-39
IDT7M464-65C	★ 4004
	3782-40
IDT7M464-85	★ 4004
	3782-61
IDT7M464-85C	★ 4004
	3782-62
IDT7M864-120	★ 4000
	3781-105
IDT7M864-120C	★ 4000
	3781-106
IDT7M864-150	★ 4000
	3781-111
IDT7M864-150C	★ 4000
	3781-112
IDT7M864-200	★ 4000
	3781-119
IDT7M864-200C	★ 4000
	3781-120
IDT7M864-85	★ 4000
	3781-97
IDT8M864-120	★ 4000
	3781-107
IDT8M864-120C	★ 4000
	3781-108
IDT8M864-150	★ 4000
	3781-113
IDT8M864-150C	★ 4000
	3781-114
IDT8M864-200	★ 4000
	3781-121
IDT8M864-200C	★ 4000
	3781-122
IDT8M864-85	★ 4000
	3781-98

Intel

Device	Page-Line
2004	★ 4023
	3758-39
2004-2	★ 4023
	3758-38
2004-3	★ 4023
	3758-42
2114AL-1	3776-21
2114AL-2	3776-27
2114AL-3	3776-32
2114AL-4	3776-59
2115A	3774-54
2115A-2	3774-87
2115AL	3774-55
2115AL-2	3774-88
2115H-2	3774-34
2115H-3	3774-37
2115H-4	3774-47
2118-4	3768-70
	¶ 321-9
2125A	3774-58
2125A-2	3774-91
2125AL	3774-59
2125AL-2	3774-92
2125H-1	3774-30
2125H-2	3774-35
2125H-3	3774-38
2125H-4	3774-48
2141-2	3780-15
2141-3	3780-20
2141-4	3780-32
2141-5	3780-56
2141L-3	3780-21
2141L-4	3780-33
2141L-5	3780-57
2147-3	3779-86
2147A	3779-116
2147A-3	3779-87
2147AL	3779-117
2147AL-3	3779-88
2147H	3779-118
2147H-1	3779-63
2147H-2	3779-72
2147H-3	3779-89
2147HL	3779-119
2147HL-3	3779-90
2148H	3776-2
2148H-2	3775-94
2148H-3	3775-112
2148HL	3776-3
2148HL-3	3775-113
2149H	3776-4
2149H-2	3775-95
2149H-3	3775-114
2149HL	3776-5
2164A-15	3769-70
2164A-20	3769-95
2186-25	3768-52
	3781-123
	¶ 321-10
2186-30	3768-53
	3781-125
	¶ 321-10
2186-35	3768-56
	3781-127
	¶ 321-10
2187-35	3781-128
	¶ 321-10
2187A-25	3768-57
	3781-129
	¶ 321-10
2187A-30	3768-54
	3781-126
	¶ 321-10
2187A-35	3768-55
	¶ 321-10
27128-25	3767-5
27128-3	3767-14
27128-30	3767-9
27128-4	3767-25
27128-45	3767-19
2716	3765-75
	¶ 260-17
2716-1	3765-53
	¶ 260-17
2716-2	3765-63
	¶ 260-17
2716-5	3765-85
	¶ 260-17
2716-6	3765-87
	¶ 260-17
27256	★ 4025
	3767-37
2732A	3766-40
2732A-2	3766-33
2732A-20	3766-34
2732A-25	3766-41
2732A-3	3766-49
2732A-30	3766-50
2732A-4	3766-60
2764	3766-90
2764-2	3766-80
2764-25	3766-91
2764-3	3766-100
2764-30	3766-101
2764-4	3766-111
2764-45	3766-112
2815	3758-62
2815-3	3758-84
2815-4	3758-98
2816	3758-63
2816-3	3758-85
2816-4	3758-99
2816A	3758-64
2816A-3	3758-86
2816A-4	3758-100
2817	★ 4024
	3758-74
2817-3	★ 4024
	3758-96
2817-4	★ 4024
	3758-105
2910	3216-111
2910A	3216-112
2911A	3216-48
2912A	3217-90
	¶ 298-14
2913	3216-72
	¶ 298-17
2914	3216-73
	¶ 298-17
2920	3238-96
	¶ 258-2
	¶ 258-6
	¶ 258-8
	¶ 261-13
	¶ 308-9
2921	3238-97
	¶ 261-13
3002	605-58
3632	3765-122
3632-1	3765-119
3636B	3764-122
3636B-1	3764-87
3636B-2	3764-105
7110	3768-2
7114	3768-6
7220	2679-16
	1352-85
7230	2679-21
7242	2684-47
7250	2679-24
7254	2679-31
	2683-17
7424	2679-30
80130	1349-1
80186	1349-11
80187	1349-102
8020H	1344-77
8021H	1344-78
	¶ 261-17
	1271-16
	¶ 261-17
8022	1344-79
	¶ 261-17
80286	1349-12
80287	1348-143
8031AH	1345-2
	¶ 274-5
	1271-17
	¶ 274-5
8032	1271-18
8035AHL	1344-5
	¶ 261-17
	1271-19
	¶ 261-17
8039AHL	1344-6
	¶ 261-17
	1271-20
	¶ 261-17
8039HL	1344-7
	¶ 261-17
8040AHL	1344-8
	1271-21
8041A	1347-40
	¶ 261-17
	¶ 269-16
8041AH	1344-158
	1346-83
	1354-61
	¶ 261-17
	¶ 269-16
8041AH-2	1344-159
	1346-84
	¶ 261-17
	¶ 269-16
8042	1344-160
	1354-63
8044	1344-172
	1354-65
8048	1344-39
	¶ 261-17
	¶ 269-16
8048AH	1344-40
	¶ 261-17
	¶ 269-16
	1271-22
	¶ 261-17
	¶ 269-16
8048H	1344-41
	¶ 261-17
	¶ 269-16
8049AH	1344-42
	¶ 261-17
	¶ 262-14
	1271-23
	¶ 261-17
	¶ 262-14
8049H	1344-43
	¶ 261-17
	¶ 262-14
8049HL	1344-44
	¶ 261-17
	¶ 262-14
8050AH	1344-45
	1271-24
8051AH	1345-10
	¶ 274-5
	1271-25
	¶ 274-5
8052	1345-11
	1271-26
8080A	1345-27
	¶ 260-17
	¶ 261-7
	¶ 268-10
	¶ 270-2
	1271-27
	¶ 260-17
	¶ 261-7
	¶ 268-10
	¶ 270-2
8080A-1	1345-28
	¶ 260-17
	¶ 270-2
8080A-2	1345-29
	¶ 260-17
	¶ 270-2
8085AH	1346-95
	¶ 274-6
	1271-28
	¶ 274-6
8085AH-2	1346-96
	¶ 274-6
8086	1349-13
	¶ 263-9
8086-1	1349-14
	¶ 263-9
8086-2	1349-15
	¶ 263-9
8087	1349-103
8088	1349-111
8088-2	1349-112
8089	1349-30
	1283-19
8096	1351-55
80A35	1344-9
80A39	1344-10
80A48L	1344-46
80A49	1344-47
80C31	1345-3
	1271-29
80C35	1344-11
80C39	1344-12
	1271-30
80C48	1344-48
80C49	1344-49
	1271-31
80C51	1345-12
	1271-32
8148	3781-96
8155	1344-140
	1347-19
8155-2	1344-141
	1347-20
8155H	1344-142
8155H-2	1344-143
8156	1344-144
	1347-21
8156-2	1344-145
	1347-22
8156H	1344-146
8156H-2	1344-147
8185	1347-29
8185-2	1347-30
8202A	2680-106
	¶ 263-9
	1345-117
	1346-119
	1349-54
	¶ 263-9
8203	2680-107
	¶ 321-9
	1345-118
	1346-120
	1349-55
	¶ 321-9
8205	2680-108
	1344-93
	1345-111
	1346-118
8206	2665-18
	1345-121
82062	1354-73
8212	1345-142
	¶ 260-17
8214	1344-110
8216	1344-84
	1345-61
	1346-104
8218	1345-81
8219	1346-108
8224	1345-87
	¶ 260-17
8226	1344-85
	1345-62
	1346-105
8228	1346-73
	¶ 260-17
82284	1349-23
82288	1349-22
8231A	1345-48
	1354-113
8232	1345-122
	1355-15
8237	1354-36
8237A	1346-148
8237A-4	1346-149
8237A-5	1346-150
8238	1346-74
8243	1344-102
	1345-135
	1346-131
	1354-59
82501	1354-7
8251	2686-22
	¶ 260-17
	1343-140
	¶ 260-17
8251A	1344-113
	1346-10
	1346-143
	¶ 260-17
8253	1344-125
	1346-39
	1354-38
8253-5	1347-4
8254	1346-23
	1354-39
8255A	1344-130
	1346-47
	1354-41
8255A-5	1347-10
8256	1346-1
	1349-59
8257	1346-27
	1346-155
	1354-37
	¶ 260-17
	¶ 261-7
8257-5	1346-28
	1346-156
	¶ 260-17
	¶ 261-7
82586	1354-8
8259	1344-116
8259-5	1344-117
8259A	1344-118
	1346-32
	1346-160
	1349-63
8259A-2	1344-119
	1346-33
	1346-161
8259A-8	1344-120
	1346-34
	1346-162
8271	1344-94
	1345-123
	1346-125
	1353-108
8271-6	1344-95
82720	1353-131
8272A	1353-114
8273	1344-156
	1346-68
	1347-37
82730	1349-71
	1353-5
82731	1349-72
	1353-26
8274	1346-67
	1354-87
8275	1344-90
	1345-95
	(Continued)
8275	1346-110
	1354-34
	¶ 260-17
8276	1345-96
	1354-45
8279	1345-154
	1354-4
	¶ 260-17
8279-5	1345-155
	¶ 260-17
8282	1349-96
8283	1349-89
8284A	1349-46
8284A-1	1349-47
8286	1349-82
8287	1349-75
8288	1349-39
8289	1349-33
8291	1344-99
8291A	1345-128
	1346-130
	1349-56
	1353-125
8292	1345-127
	1346-129
	1353-123
8293	1345-129
	1353-126
8294	1345-108
	1355-10
8295	1353-47
	¶ 263-10
82HS181	3763-48
82HS191	3764-123
82HS321	3765-120
82S181	3763-54
82S191	3765-27
82S321	3765-123
8355	1344-153
	1347-32
8355-2	1344-154
	1347-33
8396	1351-56
8641A	1344-161
	1346-85
8741A	1344-162
	1346-86
	1347-41
	1354-60
	¶ 261-17
	¶ 269-16
8742	1344-163
	1354-62
8744	1344-173
	1354-64
8748-8	1343-144
	¶ 261-17
	¶ 269-16
8748H	1343-145
	¶ 261-17
	¶ 269-16
	1271-33
	¶ 261-17
	¶ 269-16
8749H	1343-146
8749H-8	1343-147
8751	1344-174
	¶ 274-5
8751H	1271-34
	¶ 274-5
8755A	1344-133
	1346-121
	1347-13
BPK70	★ 4022
	3768-3
BPK72	★ 4021
	3768-4
CHMOS-1 Library	4477-8
IM65X61-1	3773-7
IM6658	3763-119
IM6658M	3763-120
M2114A-4	3776-60
M2114A-5	3776-91
M2114AL-3	3776-33
M2114AL-4	3776-61
M2118-4	3768-71
M2118-7	3768-81
M2147H	3779-120
M2147H-2	3779-73
M2147H-3	3779-91
M2148H	3776-6
M2164A-20	3769-96

¶ Indicates page number in Application Note Directory.
★ Indicates additional data is provided on the page noted.

IC MASTER

Device	Page-Line
Intel (Cont'd)	
M27128	3766-124
M27128-45	3767-20
M2716	3765-76
M2732A-25	3758-111
M2732A-45	3758-118
M2764-25	3759-7
M2764-45	3759-17
M2816A	3758-65
M2817	3758-106
M3001	637-47
M3632	3766-1
	3766-2
M8035HL	1271-35
M8035L	1344-13
M8039HL	1271-36
M8048H	1344-50
M8049H	1344-51
M8080A	1345-30
M8085A	1346-97
M8085AH	1346-98
M8086	1349-16
M80C31	1273-1
M80C39	1273-2
M80C49	1273-3
M80C51	1345-13
	1273-4
M8155	1347-23
M8155H	1344-148
M8185	1347-31
M8212	1345-143
M8214	1351-142
	1355-40
M8216	1345-63
M8224	1345-88
M8226	1345-64
M8228	1346-75
M8231A	1345-49
M8243	1344-103
M8251A	1346-11
M8253	1347-1
M8255A	1346-48
M8257	1346-29
	1346-151
M8259A	1346-163
M8282	1349-97
M8283	1349-90
M8284	1349-48
M8286	1344-170
	1346-89
	1347-44
	1349-83
M8287	1344-171
	1346-90
	1347-45
	1349-76
M8288	1349-40
M8289	1349-34
M8741A	1344-164
M8748	1343-148
M8749H	1273-5
M8751H	1344-175
M8755A	1346-122
SDK-86	1967-11
UP-200/201	4355-2
iAPX186	1348-142
	1285-16
iAPX186/20	1348-144
iAPX186/50	1285-17
iAPX188	1348-118
	1273-6
iAPX188/20	1349-104
iAPX268/10	1285-18
iAPX286/10	1349-4
	1285-19
iAPX286/20	1285-20
iAPX432	1289-9
iAPX43201	1352-79
iAPX43202	1352-80
iAPX43203	1352-82
iAPX43204	1352-81
iAPX43205	1352-83
iAPX432GDP	1285-21
iAPX432IP	1285-22
iAPX86/10	1349-17
	1285-23
iAPX86/20	1348-145
	1285-24
iAPX86/30	1349-2
	1285-25
iAPX86/50	1285-26

Device	Page-Line
iAPX88/10	1349-113
	1283-20
iAPX88/20	1349-105
	1283-21
iAPX88/30	1349-106
iAPX88/50	1273-7
iAPX 88/10	1345-31
iAPX 88/20	1345-32
iSBC-86/05	1967-15
iSBC-86/12A	1967-14
iSBC-86/14	1967-20
iSBC-86/30	1967-21
iSBC544	1963-16
iSBC569	1963-24
iSBC80/04	1963-9
iSBC80/05	1963-10
iSBC80/10B	1961-29
	¶ 279-4
iSBC80/20-4	1961-40
	¶ 279-4
iSBC80/24	1963-4
	¶ 279-4
iSBC80/30	1963-1
	¶ 279-4
iSBC88/25	1963-32
iSBC88/40	1963-33
Interdesign	
MCA	★ **4746**
	4469-44
MCB	★ **4746**
	4469-45
MCC	★ **4746**
	4469-46
MCD	★ **4746**
	4469-48
MCE	★ **4746**
	4469-47
MCF	★ **4746**
	4469-49
MCG	★ **4746**
	4469-50
MLA	★ **4746**
	4474-38
MOA	★ **4746**
	4474-23
MOA-268B	2668-61
MOB	★ **4746**
	4474-29
MOB-272	2672-64
MOC	★ **4746**
	4474-21
MOD	★ **4746**
	4474-22
MOE	★ **4746**
	4474-25
MOF	★ **4746**
	4474-31
MOF1305B	2668-62
MOF1623B	2674-44
MOG	★ **4746**
	4474-28
MOH	★ **4746**
	4474-27
MOJ	★ **4746**
	4474-24
MOL	★ **4746**
	4474-30
MOM	★ **4746**
	4474-33
MON	★ **4746**
	4474-34
MOP	★ **4746**
	4474-32
MOQ	★ **4746**
	4474-26
MPA	★ **4746**
	4467-37
MPB	★ **4746**
	4467-38
MPC	★ **4746**
	4467-39
MPD	★ **4746**
	★ **4747**
	4467-40
MPE	4467-36
MSA	★ **4746**
MSB	★ **4746**
MSC	★ **4746**
MUA	★ **4746**
	4474-35

Device	Page-Line
MUB	★ **4746**
	4474-36
MUC	★ **4746**
	4474-37
ULA12C	4468-27
	4469-37
ULA12N	4470-40
	4471-12
ULA12RA	4464-40
ULA12RB	4468-33
	4469-2
ULA12RC	4470-20
	4470-46
ULA12RD	4471-36
	4471-54
ULA16RA	4464-42
ULA16RB	4468-35
	4469-4
ULA16RC	4470-22
	4470-48
ULA16RD	4471-38
	4472-2
ULA18RA	4464-44
ULA18RB	4468-37
	4469-6
ULA18RC	4470-24
	4470-50
ULA18RD	4471-40
	4472-4
ULA20RA	4464-46
	4465-27
ULA20RB	4468-39
	4469-8
ULA20RC	4470-26
	4470-52
ULA20RD	4471-42
	4472-6
ULA24RA	4465-29
ULA24RB	4468-41
	4469-10
ULA24RC	4470-28
	4470-54
ULA24RD	4471-44
	4472-8
ULA2C	4469-16
	4469-31
ULA2M	4472-14
	4472-16
ULA2N	4470-34
	4471-6
ULA30RA	4465-31
ULA30RB	4468-43
	4469-12
ULA30RC	4470-30
	4471-2
ULA30RD	4471-46
	4472-10
ULA40RA	4465-33
ULA40RB	4468-45
	4469-14
ULA40RC	4470-32
	4471-4
ULA40RD	4471-48
	4472-12
ULA5C	4469-18
	4469-33
	4469-33
ULA5N	4470-36
	4471-8
ULA5RA	4464-36
	4465-17
ULA5RB	4468-29
	4468-54
ULA5RC	4470-16
	4470-42
ULA5RD	4471-32
	4471-50
ULA9C	4468-25
	4469-35
ULA9N	4470-38
	4471-10
ULA9RA	4464-38
	4465-19
ULA9RB	4468-31
	4468-56
ULA9RC	4470-18
	4470-44
ULA9RD	4471-34
	4471-52

Device	Page-Line
International Microcircuits, Inc.	
CMOS Library	★ **4747**
	4477-10
G4060	4471-13
G4112	4471-14
G4160	★ **4747**
	4471-15
G4220	★ **4747**
	4471-17
G4264	★ **4747**
	4471-19
G4312	★ **4747**
	4471-20
G4364	★ **4747**
	4471-21
G4420	★ **4747**
	4471-23
G4480	★ **4747**
	4471-24
G70090	★ **4747**
	4463-43
G70200	★ **4747**
	4463-44
G70250	★ **4747**
	4463-45
G70360	★ **4747**
	4463-46
G70490	★ **4747**
	4463-47
G70640	★ **4747**
	4463-48
G70810	★ **4747**
	4463-49
G71000	★ **4747**
	4463-50
G71440	★ **4747**
	4464-2
G71960	★ **4747**
	4464-4
G91160	★ **4747**
	4464-1
G91764	★ **4747**
	4464-3
G92240	★ **4747**
	4464-5
G92780	4464-6
G92790	★ **4747**
G93500	★ **4747**
	4464-7
G95100	★ **4747**
	4464-8
International Microelectronic Products	
Impel Library	★ **4749**
	4477-11
	4477-12
	4477-13
Intersil	
2147	3779-121
72HM185C	3783-92
8051	1345-14
80C31	1345-4
80C51	1345-15
82HM137C	3783-25
82HM137M	3783-26
82HM141C	3783-10
82HM141M	3783-11
82HM181C	3783-32
82HM181M	3783-40
82HM185M	3783-93
82HM191C	3783-99
82HM191M	3783-105
AD590I	3238-124
AD590J	3238-125
AD590K	3238-126
AD590L	3238-127
AD590M	3238-128
AD7520J	2646-37
AD7520K	2646-3
AD7520L	2644-26
AD7520S	2646-38
AD7520T	2646-4
AD7520U	2644-27
AD7521J	2656-19

Device	Page-Line
AD7521K	2656-6
AD7521L	2655-30
AD7521S	2656-20
AD7521T	2656-7
AD7521U	2655-31
AD7523J	2639-1
AD7523K	2639-27
AD7523L	2638-42
AD7523S	2639-2
AD7523T	2639-28
AD7523U	2638-43
AD7530J	2646-39
AD7530K	2646-5
AD7530L	2644-28
AD7531J	2656-21
AD7531K	2656-8
AD7531L	2655-32
AD7533J	2646-54
AD7533K	2646-20
AD7533L	2644-43
AD7533S	2647-1
AD7533T	2646-21
AD7533U	2644-44
AD7541A	2653-38
AD7541B	2650-48
AD7541J	2653-39
AD7541K	2650-49
AD7541L	2654-10
AD7541S	2654-11
AD7541T	2650-50
ADC0801	★ **2993**
	2625-35
ADC0801C	★ **2993**
	2625-36
ADC0802	★ **2993**
	2627-28
ADC0802C	★ **2993**
	2627-29
ADC0803	★ **2993**
	2627-30
ADC0803C	★ **2993**
	2627-31
ADC0804	★ **2993**
	2628-22
ADC0804C	★ **2993**
	2628-23
AM2502	639-14
AM2503	639-15
AM2504	639-125
AM25L02	639-16
AM25L03	639-17
AM25L04	639-126
CMOS Library	4477-9
Concept-48	1961-25
D112C	2622-32
D112M	2622-33
D113C	2622-34
D113M	2622-35
D120C	2622-36
D120M	2622-37
D121C	2622-38
D121M	2622-39
D123C	2622-48
D123M	2622-49
D125C	2622-50
D125M	2622-51
D129	2622-43
DG111	2616-55
DG112	2616-56
DG116	2616-57
DG118	2616-58
DG120	2620-90
DG121	2620-91
DG123	2617-96
DG123B	2617-100
DG125	2617-98
DG125B	2617-102
DG126A	2620-69
DG129A	2620-41
DG133A	2615-118
DG133B	2616-10
DG134A	2616-28
DG134B	2616-45
DG139A	2620-111
DG140A	2620-20
DG141A	2615-90
DG141B	2615-103
DG142A	2620-122
DG143	2618-66
DG144A	2618-36
DG144B	2618-54
DG145A	2620-98

Device	Page-Line
DG146A	2618-15
DG146B	2618-23
DG151A	2615-99
DG151B	2615-106
DG152A	2616-6
DG153A	2620-24
DG153B	2620-30
DG154A	2620-54
DG154B	2620-81
DG161A	2618-19
DG162A	2618-49
DG163A	2620-102
DG163B	2620-108
DG164A	2620-116
DG164B	2621-4
DG180A	2615-86
	2615-95
DG180B	2615-87
	2615-96
DG181A	2615-110
	2615-114
DG181B	2615-126
	2616-2
DG182A	2616-17
	2616-21
DG182B	2616-35
	2616-39
DG183A	2620-12
	2620-16
DG183B	2620-13
	2620-17
DG184A	2620-33
	2620-37
DG184B	2620-46
	2620-50
DG185A	2620-61
	2620-65
DG185B	2620-73
	2620-77
DG186A	2618-7
	2618-11
DG186B	2618-8
	2618-12
DG187A	2618-28
	2618-32
DG187B	2618-41
	2618-45
DG188A	2618-57
	2618-61
DG188B	2618-70
	2618-74
DG189A	2619-10
	2619-14
DG189B	2619-11
	2619-15
DG190A	2619-18
	2619-23
DG190B	2619-19
	2619-24
DG191A	2619-33
	2619-37
DG191B	2619-40
	2619-44
DG200	★ **3031**
	2615-64
DG200C	★ **3031**
	2615-71
DG200M	★ **3031**
	2615-55
DG201C	2616-109
DG201M	2616-99
DG426A	2620-68
DG429A	2620-45
DG433A	2615-125
DG434A	2616-27
DG439A	2620-115
DG440A	2620-28
DG441A	2615-104
DG442A	2620-121
DG443A	2618-65
DG444A	2618-40
DG445A	2620-106
DG446A	2618-24
DG451A	2615-107
DG452A	2616-43
DG453A	2620-31
DG454A	2620-82
DG461A	2618-26
DG462A	2618-79
DG463A	2620-109
DG464A	2621-5
DGM181B	2615-27

Arranged alphanumerically from left to right.

© IC MASTER 1984

Device	Page-Line
Intersil (Cont'd)	
DGM182A	2615-28
DGM182B	2615-62
G115A	2622-10
G115B	2622-11
G116A	2622-6
G116B	2622-7
G117A	2622-3
G117B	2622-4
G118A	2622-12
G118B	2622-13
G119A	2622-22
G119B	2622-23
G123	2621-99
G124	2621-96
G125	2621-102
G126	2621-103
G127	2621-104
G128	2621-105
G129	2621-76
G130	2621-77
G131	2621-78
G132	2621-79
G1330	2621-106
G1340	2621-107
G1350	2621-80
G1360	2621-81
HA2500	3196-32
HA2502	3200-18
HA2505	3200-19
HA2507	3201-18
HA2510	3200-9
HA2512	3201-20
HA2515	3201-26
HA2517	3201-24
HA2520	3176-90
	3200-11
HA2522	3201-22
HA2525	3201-28
HA2527	3201-31
HA2530	3176-79
HA2600	3193-8
HA2602	3195-50
HA2605	3195-51
HA2607	3198-22
HA2620	3176-46
	3193-36
HA2622	3195-56
HA2625	3195-57
HA2627	3198-23
ICH8500	★ 3477
	3203-11
	¶ 281-8
ICH8500A	★ 3477
	3203-10
	¶ 281-8
ICH8510I	★ 3479
	3156-14
	3175-83
	3176-140
	¶ 295-12
	¶ 296-10
ICH8510M	★ 3479
	3156-15
	3175-84
	3176-141
	¶ 295-12
	¶ 296-10
ICH8515I	3156-12
ICH8515M	3156-13
ICH8520I	★ 3479
	3156-16
	3175-68
	3176-142
	¶ 295-12
ICH8520M	★ 3479
	3156-17
	3175-69
	3176-143
	¶ 295-12
ICH8530I	★ 3479
	3156-18
	3175-64
	3176-144
	¶ 295-12
ICH8530M	★ 3479
	3156-19
	3175-65
	3176-145
	¶ 295-12
ICL101ALN	3191-14
ICL108LN	3190-26
ICL301ALN	3199-38
ICL4250	3193-2
ICL4250C	3195-32
ICL7101	2637-30
ICL7103	2637-31
ICL7103A	2637-51
	¶ 281-8
	¶ 307-14
	¶ 308-3
ICL7104-12	2635-33
	¶ 276-6
	¶ 281-8
	¶ 284-13
ICL7104-14	2636-1
	¶ 276-6
	¶ 281-8
	¶ 284-13
ICL7104-16	2636-48
	¶ 276-6
	¶ 281-8
	¶ 284-13
ICL7106	★ 2995
	2637-1
	¶ 284-17
	¶ 284-18
	¶ 308-2
	¶ 308-8
	¶ 308-13
ICL7107	★ 2995
	2637-2
	¶ 284-17
	¶ 284-18
	¶ 308-13
ICL7109	★ 2996
	2634-15
	¶ 281-8
	¶ 284-18
ICL7115	★ 2997
	2635-47
ICL7116	2637-3
	¶ 284-17
ICL7117	2637-4
	¶ 284-17
ICL7126	2637-5
	¶ 284-17
ICL7129	★ 2999
	2637-48
ICL7134	★ 3001
	2657-34
ICL7135	★ 3003
	2637-49
ICL7136	★ 3005
	2637-6
ICL7137	2637-7
ICL7145	★ 3007
	2658-51
ICL7146	★ 3010
	2652-30
ICL741	3175-27
	3196-50
ICL741CHS	3198-61
ICL741CLN	3199-8
ICL741LN	3196-58
ICL741MHS	3196-42
ICL7600C	3181-7
ICL7600M	3181-8
ICL7601C	3181-9
ICL7601M	3181-10
ICL7605C	3155-55
ICL7605M	3155-56
ICL7606C	3155-57
ICL7606M	3155-58
ICL7611AC	★ 3481
	3189-59
ICL7611AM	★ 3481
	3189-60
ICL7611BC	★ 3481
	3194-34
ICL7611BM	★ 3481
	3194-35
ICL7611C	★ 3481
	3202-13
ICL7611M	★ 3481
	3195-38
ICL7612AC	★ 3481
	3189-61
ICL7612AM	★ 3481
	3189-62
ICL7612BC	★ 3481
	3194-36
ICL7612BM	★ 3481
	3194-37
ICL7612C	★ 3481
	3202-14
ICL7612M	★ 3481
	3195-42
ICL7613AC	★ 3481
	3190-1
ICL7613BC	★ 3481
	3194-38
ICL7613BM	★ 3481
	3194-39
ICL7613C	★ 3481
	3195-43
ICL7613DC	★ 3481
	3202-15
ICL7613M	★ 3481
	3195-44
ICL7614AC	★ 3481
	3190-2
ICL7614AM	★ 3481
	3190-3
ICL7614BC	★ 3481
	3194-40
ICL7614BM	★ 3481
	3194-41
ICL7614C	★ 3481
	3195-45
ICL7614DC	★ 3481
	3202-16
ICL7615	★ 3481
	3190-4
ICL7615AC	★ 3481
	3190-5
ICL7615BC	★ 3481
	3194-42
ICL7615BM	★ 3481
	3194-43
ICL7615C	★ 3481
	3195-46
ICL7615DC	★ 3481
	3202-17
ICL7621AC	★ 3481
	3205-4
ICL7621AM	★ 3481
	3205-5
ICL7621BC	★ 3481
	3206-40
ICL7621BM	★ 3481
	3206-41
ICL7621C	★ 3481
	3195-47
ICL7621DC	★ 3481
	3209-39
ICL7622AC	★ 3481
	3205-2
ICL7622AM	★ 3481
	3205-3
ICL7622BC	★ 3481
	3206-42
ICL7622BM	★ 3481
	3206-43
ICL7622C	★ 3481
	3195-48
ICL7622DC	★ 3481
	3209-40
ICL7631BC	★ 3481
	3209-55
ICL7631BM	★ 3481
	3209-56
ICL7631C	★ 3481
	3195-49
ICL7631CC	★ 3481
	3210-4
ICL7631CM	★ 3481
	3210-5
ICL7631EC	★ 3481
	3210-9
ICL7631M	★ 3481
	3195-39
ICL7632BC	★ 3481
	3210-1
ICL7632BM	★ 3481
	3210-2
ICL7632C	★ 3481
	3208-19
ICL7632CC	★ 3481
	3210-6
ICL7632CM	★ 3481
	3210-7
ICL7632EC	★ 3481
	3210-10
ICL7632M	★ 3481
	3195-40
ICL7641BC	★ 3481
	3211-12
ICL7641BM	★ 3481
	3211-13
ICL7641CC	★ 3481
	3213-8
ICL7641CM	★ 3481
	3213-9
ICL7641EC	★ 3481
	3213-45
ICL7642BC	★ 3481
	3211-14
ICL7642BM	★ 3481
	3211-15
ICL7642C	★ 3481
	3195-50
ICL7642CC	★ 3481
	3213-10
ICL7642CM	★ 3481
	3213-11
ICL7642EC	★ 3481
	3213-46
ICL7642M	★ 3481
	3195-41
ICL7650C	★ 3488
	3181-6
ICL7652	★ 3496
ICL7660	★ 3498
	3239-8
	3239-15
	¶ 283-13
ICL7663	★ 3505
	3228-25
ICL7664	★ 3505
	3229-69
ICL7665	★ 3513
	3239-111
ICL7667	★ 3013
	2682-59
ICL8001C	3160-16
ICL8001M	3159-54
ICL8007	3189-18
	¶ 281-8
	¶ 295-19
	¶ 308-3
ICL8007AC	3203-5
	¶ 281-8
	¶ 295-19
	¶ 308-3
ICL8007AM	3203-6
	¶ 281-8
	¶ 295-19
	¶ 308-3
ICL8007C	3203-19
	¶ 281-8
	¶ 295-19
	¶ 308-3
ICL8007M	3202-45
	¶ 281-8
	¶ 295-19
	¶ 308-3
ICL8008C	3198-20
ICL8008M	3195-28
ICL8013C	3235-35
	¶ 281-8
ICL8013M	3235-36
	¶ 281-8
ICL8017C	3199-20
ICL8017M	3196-30
ICL8018AC	3238-109
ICL8018AM	3238-110
ICL8019AC	3238-111
ICL8019AM	3238-112
ICL8020AC	3238-113
ICL8020AM	3238-114
ICL8021C	★ 3516
	3190-51
ICL8021M	★ 3516
	3190-52
ICL8022C	★ 3516
	3208-19
ICL8022M	★ 3516
	3206-4
ICL8023C	★ 3516
	3208-21
ICL8023M	★ 3516
	3208-22
ICL8038C	★ 3518
	3215-28
	¶ 308-7
ICL8038M	★ 3518
	3215-29
	¶ 308-7
ICL8043C	3209-54
	¶ 281-8
ICL8043M	3209-53
	¶ 281-8
ICL8048C	3155-129
	¶ 281-8
	¶ 297-10
ICL8049C	3155-124
	¶ 281-8
	¶ 297-10
ICL8052	2637-32
	¶ 276-6
	¶ 284-13
ICL8052A	2635-34
	2636-2
	2636-49
	¶ 276-6
	¶ 281-8
	¶ 284-13
	¶ 307-14
	¶ 308-3
ICL8053	2637-33
ICL8053A	2637-52
ICL8063C	3164-69
ICL8063M	3164-70
ICL8068	2637-34
	¶ 284-13
ICL8068A	2637-53
	¶ 284-13
ICL8069	★ 3521
	3236-75
ICL8069M	★ 3521
	3236-76
ICL8073	3238-129
ICL8074	3238-130
ICL8211C	★ 3522
	★ 3523
	3239-10
	¶ 281-8
	¶ 312-10
ICL8211M	★ 3522
	★ 3523
	3239-11
	¶ 281-8
	¶ 312-10
ICL8212C	★ 3522
	★ 3523
	3239-12
	¶ 281-8
	¶ 312-10
ICL8212M	★ 3522
	★ 3523
	3239-13
	¶ 281-8
	¶ 312-10
ICM1115	3166-79
ICM1115A	3166-80
ICM1115B	3166-81
ICM1424B	3167-15
ICM1424MB	3167-16
ICM1424MC	3167-17
ICM7038A	590-17
	3166-82
ICM7038B	590-18
	3166-83
ICM7038C	590-19
ICM7038D	590-20
ICM7038E	590-22
ICM7038F	590-23
ICM7038G	590-24
ICM7045	641-58
	3166-124
	3167-3
ICM7045A	641-56
	3220-17
ICM7047	3167-8
ICM7049A	590-35
	3166-84
ICM7050	590-36
	3166-85
ICM7051A	590-15
	3166-125
ICM7051B	590-37
	3166-126
ICM7052	590-38
	3166-127
ICM7201	3234-134
ICM7205	3167-5
ICM7206A	★ 3524
	3219-65
ICM7206B	★ 3524
	3219-66
ICM7206C	★ 3524
	3219-67
ICM7206D	★ 3524
	3219-68
ICM7207	590-12
ICM7207A	590-13
	¶ 308-5
ICM7208	576-51
	¶ 308-5
ICM7209	★ 3015
	590-9
	★ 3015
	2679-32
ICM7210	3167-18
ICM7210C	3167-19
ICM7210M	3167-20
ICM7210MC	3167-21
ICM7211	★ 779
	579-154
	★ 779
	2662-146
ICM7211A	★ 779
	579-155
	★ 779
	2662-147
ICM7211AM	★ 779
	579-149
	★ 779
	2662-131
ICM7211M	★ 779
	579-150
	★ 779
	2662-132
ICM7212	★ 779
	579-164
	★ 779
	2662-135
ICM7212A	★ 779
	579-165
	★ 779
	2662-136
ICM7212AM	★ 779
	579-166
	★ 779
	2662-137
ICM7212M	★ 779
	579-167
	★ 779
	2662-138
ICM7213	★ 780
	590-14
ICM7214	3167-54
ICM7214A	3167-55
ICM7215	641-57
	3167-6
ICM7216	★ 781
	577-134
ICM7216A	★ 781
	640-44
ICM7216B	★ 781
	640-45
ICM7216C	★ 781
	640-55
ICM7216D	★ 781
	640-56
ICM7217	★ 782
	577-82
ICM7217A	★ 782
	577-83
ICM7217B	★ 782
	577-86
	640-39
ICM7217C	★ 782
	577-87
	640-40
ICM7218A	★ 786
	641-91
	★ 786
	2661-64
ICM7218B	★ 786
	641-92
	★ 786
	2661-65
ICM7218C	★ 786
	641-93
	★ 786
	2661-66

¶ Indicates page number in Application Note Directory.
★ Indicates additional data is provided on the page noted.

IC MASTER

Device	Page-Line
Intersil (Cont'd)	
ICM7218D	★ **786**
	641-94
	★ **786**
	2661-67
ICM7218E	★ **786**
	641-95
	★ **786**
	2661-68
ICM7220	3167-22
ICM7220A	3167-46
	¶ 305-13
ICM7220B	3167-23
ICM7220C	3167-40
ICM7220FA	3167-47
ICM7220M	3167-24
ICM7220MA	3167-25
ICM7220MC	3167-26
ICM7220MFA	3167-48
ICM7221	3167-49
ICM7222	3167-50
ICM7223	3166-101
ICM7223A	3166-102
ICM7223VF	3166-103
ICM7224	★ **789**
	577-71
ICM7224A	★ **789**
	577-72
ICM7225	★ **789**
	577-73
ICM7225A	★ **789**
	577-74
ICM7226	★ **796**
	577-135
ICM7226A	★ **796**
	640-46
ICM7226B	★ **796**
	640-47
ICM7227	★ **782**
	577-84
ICM7227A	★ **782**
	577-85
ICM7227B	★ **782**
	577-88
	640-41
ICM7227C	★ **782**
	577-89
	640-42
ICM7231	★ **798**
	2663-111
ICM7232	★ **798**
	2663-145
ICM7233	★ **798**
	2662-121
ICM7234	★ **798**
	2663-24
ICM7235	2662-125
ICM7235A	2662-126
ICM7235AM	2662-127
ICM7235M	2662-128
ICM7236	577-76
ICM7236A	577-70
ICM7240	3220-22
ICM7242	3220-23
ICM7243	★ **3017**
	2663-87
ICM7245	3167-9
ICM7250	3220-24
ICM7260	3220-25
ICM7269	3167-27
ICM7270	3167-28
ICM7271	3167-52
ICM7272	3167-29
ICM7273	3167-53
ICM7281	★ **3020**
	2661-41
ICM7555	★ **3527**
	3220-58
ICM7555M	★ **3527**
	3220-59
ICM7556	★ **3527**
	3220-64
ICM7556M	★ **3527**
	3220-65
ICC10408	★ **4751**
	4466-35
ICC10756	★ **4751**
	4466-36
ICC11500	★ **4751**
	4466-37
ICC12001	4466-38
IGD10500	4461-3
IGD11000	4461-4
IGD11500	4461-5
IGD12600	4461-6
IGD14500	4461-7
IGD16000	4461-8
IH181C	2615-127
	2616-3
IH181M	2615-111
	2615-115
IH182C	2616-36
	2616-40
IH182M	2616-18
	2616-22
IH184C	2620-47
	2620-51
IH184M	2620-34
	2620-38
IH185C	2620-74
	2620-78
IH185M	2620-62
	2620-66
IH187C	2618-42
	2618-46
IH187M	2618-29
	2618-33
IH188C	2618-71
	2618-75
IH188M	2618-56
	2618-62
IH190M	2619-20
	2619-25
IH191C	2619-41
	2619-45
IH191M	2619-34
	2619-38
IH200C	2615-69
IH200M	2615-65
IH201C	2616-95
IH201M	2616-89
IH202C	2616-96
IH202M	2616-90
IH5001	2615-15
	¶ 292-2
IH5002	2615-18
IH5003	2615-119
IH5004	2616-12
IH5005	2615-91
IH5006	2615-120
IH5007	2616-29
IH5009C	2621-84
	¶ 281-8
	¶ 281-8
	¶ 292-2
IH5009M	2621-85
	¶ 281-8
	¶ 281-8
	¶ 292-2
IH5010C	2621-91
IH5010M	2621-92
IH5011C	2621-110
IH5011M	2621-111
IH5012C	2621-117
IH5012M	2621-118
IH5013C	2621-60
IH5013M	2621-61
IH5014C	2621-64
IH5014M	2621-65
IH5015C	2621-68
IH5015M	2621-69
IH5016C	2621-72
IH5016M	2621-73
IH5017C	2621-52
IH5017M	2621-53
IH5018C	2621-48
IH5018M	2621-49
IH5019C	2621-44
IH5019M	2621-45
IH5020C	2621-56
IH5020M	2621-57
IH5021C	2621-31
IH5021M	2621-32
IH5022C	2621-38
IH5022M	2621-39
IH5023C	2621-33
IH5023M	2621-34
IH5024C	2621-40
IH5024M	2621-41
IH5025C	2621-82
	¶ 281-8
	¶ 292-2
IH5025M	2621-83
	¶ 281-8
	¶ 292-2
IH5026C	2621-89
IH5026M	2621-90
IH5027C	2621-108
IH5027M	2621-109
IH5028C	2621-115
IH5028M	2621-116
IH5029C	2621-58
IH5029M	2621-59
IH5030C	2621-62
IH5030M	2621-63
IH5031C	2621-66
IH5031M	2621-67
IH5032C	2621-70
IH5032M	2621-71
IH5033C	2621-50
IH5033M	2621-51
IH5034C	2621-46
IH5034M	2621-47
IH5035C	2621-42
IH5035M	2621-43
IH5036C	2621-54
IH5036M	2621-55
IH5037C	2621-29
IH5037M	2621-30
IH5038C	2621-36
IH5038M	2621-37
IH5040C	★ **3021**
	2615-8
	¶ 281-8
	¶ 292-2
IH5040M	★ **3021**
	2615-7
	¶ 281-8
	¶ 292-2
IH5041C	★ **3021**
	2615-70
IH5041M	★ **3021**
	2615-66
IH5042C	★ **3021**
	2618-4
IH5042M	★ **3021**
	2618-1
IH5043C	★ **3021**
	2619-1
IH5043M	★ **3021**
	2618-120
IH5044C	★ **3021**
	2619-103
IH5044M	★ **3021**
	2619-96
	2619-104
IH5045C	★ **3021**
	2620-11
IH5045M	★ **3021**
	2620-8
IH5046C	★ **3021**
	2620-97
IH5046M	★ **3021**
	2620-94
IH5047C	★ **3021**
	2621-26
IH5047M	★ **3021**
	2621-23
IH5048C	★ **3021**
	2615-26
IH5048M	★ **3021**
	2615-25
IH5049C	★ **3021**
	2619-110
IH5049M	★ **3021**
	2619-109
IH5050C	★ **3021**
	2617-109
IH5050M	★ **3021**
	2617-108
IH5051C	★ **3021**
	2618-99
IH5051M	★ **3021**
	2618-98
IH5052C	2616-97
IH5052M	2616-91
IH5053C	2616-98
IH5053M	2616-92
IH5108C	★ **3026**
	2623-80
IH5108M	★ **3026**
	2623-79
IH5110	3238-22
IH5111	3238-23
IH5112	3238-24
IH5113	3238-25
IH5114	3238-26
IH5115	3238-27
IH5140C	★ **3028**
	2615-4
IH5140M	★ **3028**
	2615-1
IH5141C	★ **3028**
	2615-63
IH5141M	★ **3028**
	2615-29
IH5142C	★ **3028**
	2617-127
IH5142M	★ **3028**
	2617-110
IH5143C	★ **3028**
	2618-119
IH5143M	★ **3028**
	2618-100
IH5144C	★ **3028**
	2619-97
IH5144M	★ **3028**
	2619-98
IH5145C	★ **3028**
	2620-7
IH5145M	★ **3028**
	2619-111
IH5200	★ **3031**
	2615-56
IH5200C	★ **3031**
	2615-72
IH5201C	2616-110
IH5201M	2616-100
IH5208C	★ **3032**
	2622-121
IH5208M	★ **3032**
	2622-120
IH5341	★ **3033**
IH6108C	★ **3035**
	2623-71
IH6108M	★ **3035**
	2623-64
IH6116C	★ **3037**
	2624-70
IH6116M	★ **3037**
	2624-71
IH6201C	2681-35
IH6201M	2681-36
IH6208C	★ **3039**
	2622-108
IH6208M	★ **3039**
	2622-103
IH6216C	★ **3040**
	2624-21
IH6216M	★ **3040**
	2624-22
IM4702	2685-37
IM4703	2685-38
IM5200	4482-70
IM5600C	3760-55
IM5603C	3760-114
IM5603M	3760-125
IM5604C	3761-77
IM5604M	3761-81
IM5610C	3760-54
IM5610M	3760-59
IM5623C	3760-116
IM5623M	3760-126
IM5624C	3761-76
IM5624M	3761-80
IM5X08-1	3774-115
IM6100	1283-26
	¶ 266-7
IM6100-1I	1350-48
	¶ 266-7
IM6100-1M	1350-49
	¶ 266-7
IM6100AI	1350-50
	¶ 266-7
IM6100AM	1350-51
	¶ 266-7
IM6100I	1350-52
	¶ 266-7
IM6101 1I	1350-73
IM6101-1M	1350-74
IM6101AI	1350-75
IM6101AM	1350-76
IM6101I	1350-77
IM6102-1I	1350-65
IM6102-1M	1350-66
IM6102AI	1350-67
IM6102AM	1350-68
IM6102I	1350-69
IM6103AI	1350-97
IM6103AM	1350-98
IM6103C	1350-99
IM6103I	1350-100
IM6103M	1350-101
IM6312-1I	3783-86
IM6312-1M	3783-87
IM6312AI	3783-84
IM6312AM	3783-85
IM6312I	3783-88
IM6312M	3783-89
IM6316I	3784-1
IM6316M	3784-2
IM6402	★ **3041**
	2686-73
	★ **3041**
	1350-82
IM6402-1I	★ **3041**
	1350-83
IM6402-1M	★ **3041**
	1350-84
IM6402AI	★ **3041**
	1350-85
IM6402AM	★ **3041**
	1350-86
IM6402M	★ **3041**
	2686-74
IM6403	★ **3041**
	2686-75
	★ **3041**
	1350-87
IM6403-1I	★ **3041**
	1350-88
IM6403AI	★ **3041**
	1350-89
IM6403AM	★ **3041**
	1350-90
IM6403M	★ **3041**
	2686-76
IM6504C	3780-26
IM6504M	3780-27
IM6512	587-170
IM6512AI	3771-103
IM6512AM	3771-104
IM6512C	3771-107
IM6512I	3771-105
IM6512M	587-171
	3771-106
IM6514C	3776-41
IM6514M	3776-42
IM65X08	3775-3
IM65X08-1M	3774-116
IM65X08A	3774-122
IM65X08A-1	3774-106
IM65X08A-1I	3774-107
IM65X08AM	3774-123
IM65X08C	3775-25
IM65X08M	3775-4
IM65X18-1	3774-120
IM65X18-1M	3774-121
IM65X18A	3774-124
IM65X18A-1	3774-109
IM65X18A-1M	3774-110
IM65X18AM	3774-125
IM65X18C	3775-10
IM65X18M	3775-11
IM65X51	3773-39
IM65X51-1	3773-13
IM65X51-1M	3773-14
IM65X51A	3773-17
IM65X51AM	3773-18
IM65X51C	3773-57
IM65X51M	3773-40
IM65X61	3773-34
IM65X61-1	3773-8
IM65X61-1M	3773-9
IM65X61A	3773-15
IM65X61AM	3773-16
IM65X61C	3773-55
IM65X61M	3773-35
IM6653-1	3763-13
IM6653M	3763-14
IM6654	3762-61
IM6654-1	3762-60
IM6654A	3762-58
IM6654M	3762-62
IM6657	3764-68
IM6657M	3764-69
IM7027-1	3768-18
IM7027-3	3768-28
IM7027-4	3768-37
IM7141	3780-120
IM7141-2	3780-34
IM7141-2M	3780-35
IM7141-3	3780-86
IM7141-3M	3780-87
IM7141L	3780-121
IM7141L-2	3780-36
IM7141L-3	3780-88
IM7141M	3780-122
IM7332	3784-85
IM7332C	3783-121
IM7364C	3786-43
IM82C43I	★ **1500**
	1345-133
IM82C43M	★ **1500**
	1345-134
IT120	3157-56
IT120A	3157-57
IT121	3157-58
IT122	3157-59
IT130	3157-95
IT130A	3157-96
IT131	3157-97
IT132	3157-98
InterceptJr	1965-10
LF155	3175-48
	3186-11
LF155A	3189-40
LF156	3195-2
LF156A	3189-50
LF157	3194-47
LF157A	3189-30
LF355	3200-44
LF355A	3189-41
LF356	3200-49
LF356A	3189-51
LF357	3200-39
LF357A	3189-31
LH0042	3202-51
LH0042C	3202-54
LH2101A	3205-32
LH2108A	3204-14
LH2110	3174-22
LH2111	3161-5
LH2301A	3209-15
LH2308A	3204-22
LH2310	3174-27
LH2311	3162-1
LM100	3228-36
LM102	3174-31
LM107	3191-16
LM108	3190-38
LM108A	3186-24
LM110	3174-20
LM111	3159-40
LM124	3180-48
LM139	3162-53
LM139A	3162-22
LM300	3228-29
LM302	3174-37
LM305	3228-48
LM307	3199-39
LM308	3199-31
LM308A	3186-52
LM308LN	3199-25
LM310	3174-29
LM311	3160-27
LM324	3180-49
LM339	3163-9
LM339A	3162-33
MK4027-2	3768-22
MK4027-3	3768-29
MK4027-4	3768-38
MM450	2622-19
MM451	2621-97
MM452	2622-1
MM455	2621-74
MM550	2622-20
MM551	2621-98
MM552	2622-2
MM555	2621-75
NE555	3220-35
NE556	3220-73
OP-05	3186-36
OP-05A	3183-53
OP-05C	3188-55
OP-05E	3186-43
OP-07	3182-39
OP-07A	3181-23
OP-07C	3184-4
OP-07D	3184-9

Arranged alphanumerically from left to right.

© IC MASTER 1984

Intersil (Cont'd)

Device	Page-Line
OP-07E	3182-52
SE555	3220-36
SE556	3220-74
uA723	3229-8
uA733	3156-87
uA733C	3156-88
uA740	3202-58
uA740C	3203-20
uA748C	3198-56
uA777C	3196-17

LSI Computer Systems

Device	Page-Line
C1200	2662-103
	3166-129
D3600	589-175
D6	589-169
D60	589-171
LS7030	★ 803
	640-57
LS7031	★ 803
	640-54
LS7040	★ 803
	640-49
LS7050	★ 803
	640-52
LS7055/56	★ 803
	640-53
LS7060	★ 803
	640-60
	¶ 288-17
LS7061	★ 803
	640-61
	¶ 288-17
LS7062	★ 803
	640-50
LS7100	★ 803
	2662-62
LS7110	★ 803
	641-96
	★ 803
	2624-38
LS7210	★ 803
	592-116
	★ 803
	3220-26
LS7220	★ 803
	3173-25
	¶ 253-11
LS7225	★ 803
	3173-26
LS7226	★ 803
	3173-27
LS7228	★ 803
	3173-28
LS7229	★ 803
	3173-29
LS7231	★ 803
	3173-123
LS7232	★ 803
	3173-124
LS7233	★ 803
	3173-125
LS7234	★ 803
	3173-126
LS7235	★ 803
	3173-127
LS7236	★ 803
LS7237	★ 803
LS7240	★ 803
	640-26
LS7261	★ 803
LS7263	★ 803
	3173-51
	3234-150
	3235-3
LS7270	1351-146
	1355-44
LS7272	★ 803
RDD104	★ 803
	577-91
	640-105
RED100/120	★ 803
	589-172
	641-27
RED300/360	★ 803
	589-173
	641-41
RED3000/3600	★ 803
	589-174
	641-47
RED5/6	★ 803
	589-168
	640-89
RED50/60	★ 803
	589-170
	641-10

LSI logic

Device	Page-Line
LC10000	★ 4762
	4468-22
LC12600	★ 4762
	4468-23
LC3100	★ 4762
	4468-18
LC4100	★ 4762
	4468-19
LC5400	★ 4762
	4468-20
LC7700	★ 4762
	4468-21
LCA1200	★ 4762
	4460-28
LCA600	★ 4762
	4460-24
LDSI	★ 4762
LL3020	★ 4762
	4467-45
LL3030	★ 4762
	4467-46
LL3040	★ 4762
	4467-47
LL3060	★ 4762
	4467-48
LL3080	★ 4762
	4467-49
LL3110	★ 4762
	4467-50
LL3130	★ 4762
	4467-51
LL3170	★ 4762
	4467-52
LL3210	★ 4762
	4467-53
LL3250	★ 4762
	4467-54
LL5080	★ 4762
	4465-46
LL5140	★ 4762
	4465-47
LL5220	★ 4762
	4465-48
LL5320	★ 4762
	4465-49
LL5420	★ 4762
	4465-50
LL5600	★ 4762
	4465-51
LL7090	★ 4762
	4460-47
LL71000	★ 4762
	4461-2
LL7140	★ 4762
	4460-48
LL7220	★ 4762
	4460-49
LL7320	★ 4762
	4460-50
LL7430	★ 4762
	4460-51
LL7640	★ 4762
	4460-52
LL7840	★ 4762
	4461-1

Micrel

Device	Page-Line
MIC1404	★ 4765
MIC2316A	★ 4765
MIC2825	★ 4765
MIC2827	★ 4765

Micro Networks

Device	Page-Line
DA85C-CCD	2657-2
DAC71	★ 3044
	2652-44
DAC80	★ 3044
	2651-53
DAC85-CBI	★ 3044
	2649-52
DAC85-CCD	★ 3044
	2657-3
DAC88	★ 3044
	2652-42
DACHK	★ 3044
	2652-16
MN0300A	★ 3045
	3238-161
MN0405	★ 3044
	2638-3
MN050	★ 3045
	3238-162
MN0605	★ 3044
	2638-27
MN0805	★ 3044
	2640-7
MN2020	★ 3042
	3156-40
MN2200	★ 3042
	3155-74
	¶ 308-10
MN2200H	★ 3042
	3155-75
	¶ 308-10
MN2201	3155-76
MN2201H	3155-77
MN3000	★ 3044
	2642-7
MN3000H	★ 3044
	2642-8
MN3001	★ 3044
	2642-9
MN3001H	★ 3044
	2642-10
MN3002	★ 3044
	2642-11
MN3002H	★ 3044
	2642-12
MN3003	★ 3044
	2645-8
MN3003H	★ 3044
	2645-9
MN3004	★ 3044
	2645-10
MN3004H	★ 3044
	2645-11
MN3005	★ 3044
	2645-12
MN3005H	★ 3044
	2645-13
MN3006	★ 3044
	2642-13
MN3006H	★ 3044
	2642-14
MN3007	★ 3044
	2645-14
MN3007H	★ 3044
	2645-15
MN3008	★ 3044
	2641-36
	¶ 285-1
MN3008H	★ 3044
	2641-37
	¶ 285-1
MN3009	★ 3044
	2641-38
MN3009H	★ 3044
	2641-39
MN3013	★ 3044
	2642-15
MN3013H	★ 3044
	2642-16
MN3014	★ 3044
	2641-47
MN3014H	★ 3044
	2641-48
MN3020	★ 3044
	2641-51
MN3020H	★ 3044
	2641-52
MN3040	★ 3044
	2644-50
MN3040H	★ 3044
	2644-51
MN3346	★ 3044
	2652-36
MN3348H	★ 3044
	2652-37
MN3349	★ 3044
	2652-38
MN3349H	★ 3044
	2652-39
MN3412	★ 3044
	2653-4
MN343	★ 3045
	3238-28
MN343H	★ 3045
	3238-29
MN344	★ 3045
	3238-30
MN344H	★ 3045
	3238-31
MN346	★ 3045
	3238-32
MN346H	★ 3045
	3238-33
MN347	★ 3045
	3238-34
MN347H	★ 3045
	3238-35
MN3660	★ 3044
	2652-43
MN370	★ 3044
	2653-22
MN370H	★ 3044
	2653-23
MN371	★ 3044
	2653-8
MN371H	★ 3044
	2653-9
MN373	★ 3045
	3238-163
MN374	3238-164
MN375A	★ 3045
	3238-36
MN376	★ 3045
	3238-165
MN377	★ 3045
	3238-166
MN379	★ 3045
	3238-167
MN3850	★ 3044
	2652-26
MN3850H	★ 3044
	2652-27
MN3860	★ 3044
	2652-28
MN3860H	★ 3044
	2652-29
MN5065	★ 3043
	2627-23
MN5065H	★ 3043
	2627-24
MN5066	★ 3043
	2627-25
MN5066H	★ 3043
	2627-26
MN5100	★ 3043
	2626-8
MN5100H	★ 3043
	2626-9
MN5101	★ 3043
	2625-53
MN5101H	★ 3043
	2625-54
MN5120	★ 3043
	2626-34
MN5120H	★ 3043
	2626-35
MN5121	★ 3043
	2626-36
MN5121H	★ 3043
	2626-37
MN5122	★ 3043
	2626-38
MN5122H	★ 3043
	2626-39
MN5123	★ 3043
	2626-40
MN5123H	★ 3043
	2626-41
MN5130	★ 3043
	2626-23
MN5130H	★ 3043
	2626-24
MN5131	★ 3043
	2626-25
MN5131H	★ 3043
	2626-26
MN5132	★ 3043
	2626-27
MN5132H	★ 3043
	2626-28
MN5133	★ 3043
	2626-29
MN5133H	★ 3043
	2626-30
MN5140	★ 3043
	2626-15
MN5140H	★ 3043
	2626-16
MN5141	★ 3043
	2626-17
MN5141H	★ 3043
	2626-18
MN5142	★ 3043
	2626-19
MN5142H	★ 3043
	2626-20
MN5143	★ 3043
	2626-21
MN5143H	★ 3043
	2626-22
MN5150	★ 3043
	2626-31
MN5200	★ 3043
	2633-30
	¶ 284-1
MN5200H	★ 3043
	2633-31
	¶ 284-1
MN5201	★ 3043
	2633-32
MN5201H	★ 3043
	2633-33
MN5202	★ 3043
	2633-34
MN5202H	★ 3043
	2633-35
MN5203	★ 3043
	2633-14
MN5203H	★ 3043
	2633-15
MN5204	★ 3043
	2633-16
MN5204H	★ 3043
	2633-17
MN5205	★ 3043
	2633-18
MN5205H	★ 3043
	2633-19
MN5206	★ 3043
	2633-36
MN5206H	★ 3043
	2633-37
MN5210	★ 3043
	2632-10
	¶ 284-1
MN5210H	★ 3043
	2632-11
	¶ 284-1
MN5211	★ 3043
	2632-12
MN5211H	★ 3043
	2632-13
MN5212	★ 3043
	2632-14
MN5212H	★ 3043
	2632-15
MN5213	★ 3043
	2631-36
MN5213H	★ 3043
	2631-37
MN5214	★ 3043
	2631-38
MN5214H	★ 3043
	2631-39
MN5215	★ 3043
	2631-40
MN5215H	★ 3043
	2631-41
MN5216	★ 3043
	2632-16
MN5216H	★ 3043
	2632-17
MN5240-10	★ 3043
	2629-16
MN5240-12	★ 3043
	2630-43
MN5243	★ 3043
	2630-28
MN5244	★ 3043
	2630-29
MN5245A	★ 3043
	2630-23
MN5246	★ 3043
MN5247	★ 3043
	2630-21
MN5248	★ 3043
MN5250	2633-53
MN5250H	2633-54
MN5251	2633-55
MN5251H	2634-1
MN5252	2634-2
MN5252H	2634-3
MN5253	2634-4
MN5253H	2634-5
MN5260	★ 3043
	2635-51
MN5263	2635-38
MN5280	★ 3043
	2636-47
MN5282	★ 3043
	2636-42
MN5284	★ 3043
	2636-38
MN5290	★ 3043
	2636-32
MN5291	★ 3043
	2636-33
MN5610	★ 3043
	2631-42
MN5611	★ 3043
MN5612	★ 3043
MN5613	★ 3043
MN5614	★ 3043
MN5615	★ 3043
MN5616	★ 3043
MN5617	★ 3043
MN565A	★ 3044
MN5700	★ 3043
	2634-6
MN574A	★ 3043
	2632-34
MN5815	★ 3043
	2625-48
MN5825	★ 3043
	2626-4
MN7120	★ 3042
	3233-12
MN7120H	★ 3042
	3233-13
MN7130	★ 3042
	3238-37
	¶ 280-11
MN7130H	★ 3042
	3238-38
	¶ 280-11
MN7140	★ 3042
	3233-14
MN7140H	★ 3042
	3233-15
MN7150	★ 3042
	3233-39
MNADC80	★ 3043
	2632-40
MNADC84-10	★ 3043
	2629-24
MNADC84-12	★ 3043
	2630-48
MNADC85-10	★ 3043
	2629-25
MNADC85-12	★ 3043
	2630-49
MNADC87	★ 3043
	2630-50
MNDAC87	★ 3044
	2651-54

Micro Power Systems

Device	Page-Line
AD562S/BIN	2648-32
DAC-01	2638-9
DAC-01B	2638-10
DAC-01C	2638-11
DAC-01D	2638-12
DAC-01F	2638-13
DAC-01H	2638-14
MP1208B	★ 3046
	2654-51
MP1208K	★ 3046
	2654-52
MP1208T	★ 3046
	2654-53

¶ Indicates page number in Application Note Directory.
★ Indicates additional data is provided on the page noted.

IC MASTER

Micro Power Systems (Cont'd)

Device	Page-Line
MP1209A	2654-18
MP1209J	2654-19
MP1209S	2654-20
MP1210H	2655-9
MP1210R	2655-10
MP1210Z	2655-11
MP1230B	★ **3046** 2654-54
MP1230K	★ **3046** 2655-1
MP1230T	★ **3046** 2655-2
MP1231A	2654-21
MP1231J	2654-22
MP1231S	2654-23
MP1232H	2654-24
MP1232R	2654-25
MP1232Z	2654-26
MP200DIA	★ **3047** 2615-59
MP200DIB	★ **3047** 2615-76
MP200DIC	★ **3047** 2615-77
MP201DIA	★ **3047** 2616-93
MP201DIB	★ **3047** 2616-94
MP2114C	3776-84
MP2114CLP1	3777-53
MP2114CLP3	3777-55
MP23128-25	3787-1
MP2325-25	3787-62
MP2325-45	3787-87
MP2325-85	3787-99
MP2326-25	3787-63
MP2326-45	3787-88
MP2326-85	3787-100
MP2364-25	3785-74
MP2364-35	3786-34
MP2364-45	3786-67
MP2364C	3786-68
MP2364LP1	3786-101
MP2365-25	3785-75
MP2365-35	3786-35
MP2365-45	3786-69
MP2365LP1	3786-102
MP301	3157-60
MP302	3157-61
MP303	3157-62
MP310	3157-63
MP311	3157-64
MP312	3157-65
MP313	3157-66
MP3140B-3	★ **3046** 2657-51
MP3140B-4	★ **3046** 2657-45
MP3140C-3	★ **3046** 2657-52
MP3140C-4	★ **3046** 2657-46
MP318	3157-50
MP350	3157-99
MP351	3157-100
MP352	3157-101
MP358	3157-94
MP361	3157-67
MP362	3157-68
MP370B-18	★ **3046** 2659-47
MP370C-18	★ **3046** 2659-48
MP377B-18	★ **3046** 2659-52
MP377C-18	★ **3046** 2659-53
MP3954	3157-77
MP3954A	3157-78
MP3955	3157-79
MP3956	3157-80
MP3958	3157-81
MP4136	★ **3529** 3211-53
MP4136C	★ **3529** 3212-49
MP5010	★ **3529** 3236-48
MP5010A	★ **3529** 3236-49
MP5071	3168-120
MP517J	3183-58
MP517K	3182-6
MP517L	3181-20
MP517S	3182-7
MP5501A	★ **3529** 3187-19
MP5501C	★ **3529** 3196-11
MP5501E	★ **3529** 3190-61
MP5501F	★ **3529** 3191-1
MP5501G	★ **3529** 3196-12
MP5501H	★ **3529** 3187-20
MP5502	★ **3529** 3175-28 3191-6
MP5502A	★ **3529** 3186-61
MP5502B	★ **3529** 3196-18
MP5502D	★ **3529** 3196-19
MP5502E	★ **3529** 3186-62
MP5503	★ **3529**
MP5504	★ **3529**
MP5505A	★ **3529** 3183-55
MP5505B	★ **3529** 3186-39
MP5505C	★ **3529** 3188-57
MP5505E	★ **3529** 3186-45
MP5507A	★ **3529** 3181-26
MP5507B	★ **3529** 3182-42
MP5507C	★ **3529** 3203-42
MP5507D	★ **3529** 3184-10
MP5507E	★ **3529** 3182-54
MP5508	★ **3529** 3185-9
MP5509A	★ **3529** 3210-13
MP5509E	★ **3529** 3210-14
MP5510A	★ **3529** 3189-8
MP5510B	★ **3529** 3189-9
MP5510C	★ **3529** 3204-58
MP5510E	★ **3529** 3189-10
MP5511A	★ **3529** 3210-15
MP5511E	★ **3529** 3210-16
MP5514	★ **3529**
MP5520A	★ **3046** 2638-15
MP5520B	★ **3046** 2638-16
MP5520C	★ **3046** 2638-17
MP5520D	★ **3046** 2638-31
MP5520F	★ **3046** 2638-18
MP5520H	★ **3046** 2638-19
MP5527	★ **3529** 3181-11
MP5531	★ **3529** 3236-138
MP5532	★ **3529** 3237-66
MP5537	★ **3529** 3181-12
MP5540	3236-104
MP5541	3236-139
MP5542	3237-67
MP5543	3236-140
MP5544	3237-25
MP5545	3237-68
MP562H	★ **3046** 2651-24
MP562J	★ **3046** 2651-25
MP562K	★ **3046** 2651-26
MP574J	★ **3046** 2634-35
MP574K	★ **3046** 2635-8
MP574L	★ **3046** 2635-9
MP574S	★ **3046** 2634-36
MP574T	★ **3046** 2635-10
MP574U	★ **3046** 2635-11
MP5911	3157-82
MP5912	3157-83
MP5912C	3157-84
MP6116-20	3778-98
MP6116-25	3779-2
MP6116S-1	3777-118
MP6116S-12	3778-34
MP6116S-15	3778-59
MP6117-20	3778-99
MP6117-25	3779-3
MP6117S-1	3777-119
MP6117S-12	3778-35
MP6117S-15	3778-60
MP6118-20	3778-100
MP6118-25	3779-4
MP6118S-1	3777-120
MP6118S-12	3778-36
MP6118S-15	3778-61
MP6504	3780-47
MP6504LP1	3781-3
MP6514	3776-85
MP6514LP1	3777-54
MP7138	★ **3046** 2637-8
MP7138A	★ **3046** 2637-9
MP7150	3167-51
MP7156	3166-69 3214-88
MP7160	3167-41
MP7162	3173-88
MP7189	3166-71
MP7216	3167-44
MP7501J	★ **3047** 2623-65
MP7501K	★ **3047** 2623-66
MP7501S	★ **3047** 2623-25
MP7502J	★ **3047** 2622-104
MP7502K	★ **3047** 2622-105
MP7502S	★ **3047** 2622-67
MP7503J	★ **3047** 2623-67
MP7503K	★ **3047** 2623-68
MP7503S	★ **3047** 2623-26
MP7506J	★ **3047** 2624-56
MP7506K	★ **3047** 2624-57
MP7506S	★ **3047** 2624-44
MP7507J	★ **3047** 2624-5
MP7507K	★ **3047** 2624-6
MP7507S	★ **3047** 2623-112
MP7508J	★ **3047** 2623-69
MP7508K	★ **3047** 2623-70
MP7508S	★ **3047** 2623-27
MP7509J	★ **3047** 2622-106
MP7509K	★ **3047** 2622-107
MP7509S	★ **3047** 2622-68
MP7510DIJ	★ **3047** 2616-121
MP7510DIK	★ **3047** 2616-122
MP7510DIS	★ **3047** 2617-1
MP7511DIJ	★ **3047** 2617-2
MP7511DIK	★ **3047** 2617-3
MP7511DIS	★ **3047** 2617-4
MP7511DIT	★ **3047** 2617-5
MP7512DIJ	★ **3047** 2619-6
MP7512DIK	★ **3047** 2619-7
MP7512DIS	★ **3047** 2619-8
MP7512DIT	★ **3047** 2619-9
MP7520G	★ **3046** 2647-19
MP7520H	★ **3046** 2647-13
MP7520J	★ **3046** 2646-40
MP7520K	★ **3046** 2646-6
MP7520L	★ **3046** 2644-29
MP7520Q	★ **3046** 2645-52
MP7520R	★ **3046** 2645-38
MP7520S	★ **3046** 2646-41
MP7520T	★ **3046** 2646-7
MP7520U	★ **3046** 2644-30
MP7520W	★ **3046** 2645-53
MP7520Y	★ **3046** 2645-39
MP7521J	★ **3046** 2656-22
MP7521K	★ **3046** 2656-9
MP7521L	★ **3046** 2655-33
MP7521S	★ **3046** 2656-23
MP7521T	★ **3046** 2656-10
MP7521U	★ **3046** 2655-34
MP7522J	★ **3046** 2646-49
MP7522K	★ **3046** 2646-15
MP7522L	★ **3046** 2644-38
MP7522S	★ **3046** 2646-50
MP7522T	★ **3046** 2646-16
MP7522U	★ **3046** 2644-39
MP7523J	★ **3046** 2640-30
MP7523K	★ **3046** 2639-29
MP7523L	★ **3046** 2638-44
MP7524A	★ **3046** 2640-31
MP7524B	★ **3046** 2639-30
MP7524C	★ **3046** 2638-45
MP7524J	★ **3046** 2640-46
MP7524K	★ **3046** 2639-34
MP7524L	★ **3046** 2638-49
MP7524S	★ **3046** 2640-47
MP7524T	★ **3046** 2639-35
MP7524U	★ **3046** 2638-50
MP7525B	3232-68
MP7525K	3232-69
MP7525T	3232-70
MP7528	★ **3046**
MP7530	★ **3046** 2644-31
MP7530J	★ **3046** 2646-42
MP7530K	★ **3046** 2646-8
MP7531J	★ **3046** 2656-24
MP7531K	★ **3046** 2656-11
MP7531L	★ **3046** 2655-35
MP7533K	★ **3046** 2646-22
MP7533L	★ **3046** 2644-45
MP7533Q	★ **3046** 2643-46
MP7533R	★ **3046** 2643-35
MP7533S	★ **3046** 2647-2
MP7533T	★ **3046** 2647-3 2647-4
MP7533U	★ **3046** 2644-46
MP7533W	★ **3046** 2643-47
MP7533Y	★ **3046** 2643-36
MP7541A	★ **3046** 2653-33
MP7541B	★ **3046** 2650-43
MP7541J	★ **3046** 2653-34
MP7541K	★ **3046** 2650-44
MP7541S	★ **3046** 2653-35
MP7541T	★ **3046** 2650-42
MP7542A	★ **3046** 2654-33
MP7542B	★ **3046** 2655-3
MP7542J	★ **3046** 2654-37
MP7542K	★ **3046** 2655-8
MP7542T	★ **3046** 2655-4
MP7543A	★ **3046** 2654-34
MP7543B	★ **3046** 2655-5
MP7543J	★ **3046** 2654-35
MP7543K	★ **3046** 2655-6
MP7543S	★ **3046** 2654-36
MP7543T	★ **3046** 2655-7
MP7550B	★ **3046** 2635-40
MP7570J	★ **3046** 2627-5
MP7570L	★ **3046** 2629-49
MP7574A	★ **3046** 2627-50
MP7574B	★ **3046** 2626-51
MP7574J	★ **3046** 2627-51
MP7574K	★ **3046** 2626-52
MP7574S	★ **3046** 2627-52
MP7574T	★ **3046** 2626-53
MP75815	3233-24
MP7581A	★ **3046** 3233-25
MP7581B	★ **3046** 3233-26
MP7581C	★ **3046** 3233-27
MP7581J	★ **3046** 3233-28
MP7581K	★ **3046** 3233-29
MP7581L	★ **3046** 3233-30
MP7581T	★ **3046** 3233-31
MP7581U	★ **3046** 3233-32
MP7614J	★ **3046** 2658-2
MP7614K	★ **3046** 2657-49
MP7614S	★ **3046** 2658-3
MP7614T	★ **3046** 2657-50
MP7616J	★ **3046** 2659-24
MP7616K	★ **3046** 2659-28
MP7616L	★ **3046** 2659-23
MP7616S	★ **3046** 2659-25
MP7616T	★ **3046** 2658-46
MP7621A	★ **3046** 2653-40
MP7621B	★ **3046** 2650-51
MP7621J	★ **3046** 2653-41
MP7621K	★ **3046** 2650-52
MP7621S	★ **3046** 2653-42
MP7621T	★ **3046** 2650-53
MP7621Z	★ **3046** 2655-27
MP7622A	★ **3046** 2654-3
MP7622B	★ **3046** 2648-43
MP7622H	★ **3046** 2655-39
MP7622J	★ **3046** 2654-4
MP7622K	★ **3046** 2648-45
MP7622R	★ **3046** 2655-40
MP7622S	★ **3046** 2654-5
MP7622T	★ **3046** 2648-44
MP7622Z	★ **3046** 2655-41
MP7623A	★ **3046** 2654-12
MP7623B	★ **3046** 2651-15
MP7623J	★ **3046** 2654-13
MP7623K	★ **3046** 2651-16
MP7623S	★ **3046** 2654-14
MP7623T	★ **3046** 2651-17
MP7645	★ **3046**
MP830	3157-85
MP831	3157-86
MP832	3157-87
MP833	3157-88
MP840	3157-89
MP841	3157-90
MP8416-20	3778-101
MP8416-25	3779-5
MP8417-20	3778-102
MP8417-25	3779-6

Arranged alphanumerically from left to right.

© IC MASTER 1984

Micro Power Systems (Cont'd)

Device	Page-Line
MP8418-20	3778-103
MP8418-25	3779-7
MP843	3157-91
MP844	3157-92
MP845	3157-93
MP8526B	★ **3046** 2657-20
MP8526C	★ **3046** 2657-22
MP8526S	★ **3046** 2657-21
MP8526T	★ **3046** 2657-23
MP9331-4	★ **3046** 2658-50
MP9331-5	★ **3046** 2658-24
MP9331-6	★ **3046** 2658-14
MP9377-16	★ **3046** 2658-20
MP9377-16-4	★ **3046** 2659-14
MP9377-16-5	★ **3046** 2658-27
MP9377-16-6	★ **3046** 2658-30
MPINA101A	3155-51
MPINA101B	3155-52
MPINA101C	3155-53
MPINA101S	3155-54
MPLM108	★ **3529**
MPLM208	★ **3529**
MPLM308	★ **3529**
MPOP-03	★ **3529** 3205-27
MPOP-03A	★ **3529** 3204-42
MPOP-03B	★ **3529** 3207-4
MPOP-03C	★ **3529** 3205-28
MPOP-03D	★ **3529** 3207-5
MPOP-03E	★ **3529** 3204-37
MPOP-04	★ **3529** 3205-24
MPOP-04A	★ **3529** 3204-38
MPOP-04B	★ **3529** 3206-60
MPOP-04C	★ **3529** 3205-25
MPOP-04D	★ **3529** 3207-1
MPOP-04E	★ **3529** 3204-39
MPOP-06A	★ **3529** 3183-49
MPOP-06B	★ **3529** 3185-3
MPOP-08C	★ **3529** 3188-38
MPOP-08E	★ **3529** 3183-50
MPOP-08F	★ **3529** 3185-4
MPOP-08G	★ **3529** 3188-39
MPOP-11	3210-17
MPOP-12A	★ **3529** 3203-39
MPOP-12B	★ **3529** 3204-3
MPOP-12C	★ **3529** 3203-33
MPOP-12E	★ **3529** 3203-40
MPOP-12F	★ **3529** 3204-4
MPOP-12G	★ **3529** 3203-34
MPOP-14A	★ **3529** 3204-40
MPOP-14B	★ **3529** 3207-2
MPOP-14C	★ **3529** 3205-26
MPOP-14D	★ **3529** 3207-3
MPOP-14E	★ **3529** 3204-41
MPOP-207A	★ **3529** 3203-29
MPOP-207B	★ **3529** 3203-55
MPOP-207E	★ **3529** 3203-30
MPOP-207F	★ **3529** 3203-56
MPOP-227A	★ **3529** 3203-25
MPOP-227B	★ **3529** 3203-35
MPOP-227C	★ **3529** 3203-49
MPOP-227D	★ **3529** 3203-50
MPOP-227E	★ **3529** 3203-26
MPOP-227F	★ **3529** 3203-36
MPOP2108	★ **3529**
MPOP2208	★ **3529**
MPOP2308	★ **3529**
MPREF-01	★ **3529** 3237-69
MPREF-02	★ **3529** 3236-141
MPREF-02A	3236-142
MPREF-02C	3236-143
MPREF-02D	3236-144
MPREF-02F	3236-145
MPREF-02H	3236-146
MPREF-05	★ **3529**
MPREF-10	★ **3529** 3237-70
MPS5003	3164-8
MPS5004	3164-9
MPS5053	3164-10
MPVFC32B	3233-120
MPVFC32K	3233-121
MPVFC32S	3233-122
OP-01A	★ **3529** 3187-21
OP-01C	★ **3529** 3196-13
OP-01E	★ **3529** 3191-2
OP-01F	★ **3529** 3191-3
OP-01G	★ **3529** 3196-14
OP-01H	★ **3529** 3187-22
OP-02	★ **3529** 3191-7
OP-02A	★ **3529** 3186-63
OP-02B	★ **3529** 3196-20
OP-02C	★ **3529** 3191-8
OP-02D	★ **3529** 3196-21
OP-02E	★ **3529** 3186-64
OP-05	★ **3529** 3186-40
OP-05A	★ **3529** 3183-54
OP-05C	★ **3529** 3188-58
OP-05E	★ **3529** 3186-46
OP-07	★ **3529** 3182-43
OP-07A	★ **3529** 3181-27
OP-07C	★ **3529** 3184-5
OP-07E	★ **3529** 3182-55
OP-09	★ **3529**
OP-10	★ **3529** 3204-19
OP-10A	★ **3529** 3204-20
OP-10C	★ **3529** 3204-59
OP-10E	★ **3529** 3204-21
OP-11	★ **3529**
OP-15A	3185-54
OP-15B	3188-18
OP-15C	3192-33
OP-15E	3185-55
OP-15F	3188-19
OP-15G	3192-34
OP-16A	3185-58
OP-16B	3188-22
OP-16C	3192-37
OP-16E	3185-59
OP-16F	3188-23
OP-16G	3192-38
OP-17A	3185-50
OP-17B	3188-14
OP-17C	3192-41
OP-17E	3185-51
OP-17F	3188-15
OP-17G	3192-42
OP-27	★ **3529** 3183-10
OP-37	★ **3529** 3183-14

Mitel Semiconductor

Device	Page-Line
CM7050	3218-37
M74LS241	2669-8
M74LS242	2675-54
M74LS243	2675-55
M74LS670	3770-45
MA4200	4463-33
MA5050	4465-34
MA5100	4465-35
MA5150	4465-36
MC74HCT373R	586-129
MD21SC14-10	3776-19
MD21SC14-15	3776-29
MD21SC14-25	3776-86
MD23SC16	3783-119
MD4330B	591-183
	2664-11
	3791-37
MD4332B	591-189
MD54HCT138R	★ **3048** 578-149
MD54HCT139R	★ **3049** 578-107
MD54HCT240	★ **3050** 594-7
MD54HCT241R	★ **3051** 594-45
MD54HCT244R	★ **3052** 593-161
MD54HCT245R	★ **3053** 594-135
MD54HCT373R	★ **3054** 586-130
MD54HCT374R	★ **3055** 581-72
MD54HCT540R	★ **3056** 573-95
MD54HCT541R	★ **3057** 573-96
MD54HCT573R	★ **3058** 586-131
MD54HCT574R	★ **3059** 581-73
MD54SC137	579-2
MD54SC138	578-150
MD54SC139	578-108
MD54SC240	594-8
MD54SC241	594-46
MD54SC244	593-162
MD54SC245	594-136
	2678-33
MD54SC373	586-132
MD54SC374	581-74
MD54SC540	573-97
MD54SC541	573-98
MD54SC573	586-133
MD54SC574	581-75
MD65SC22	1341-148
MD65SC28	1341-140
MD65SC51	1341-128
MD65SC58	1341-129
MD68SC08	1342-83
MD68SC20	1343-44
MD68SC21	1343-59
MD68SC22	1343-21
MD68SC23	1343-22
MD68SC40	1343-119
MD68SC49	1342-128
MD68SC84	1343-20
MD74HCT138R	★ **3048** 578-151
MD74HCT139R	★ **3049** 578-109
MD74HCT240	★ **3050** 594-9
MD74HCT241R	★ **3051** 594-47
MD74HCT244R	★ **3052** 593-163
MD74HCT245R	★ **3053** 594-137
MD74HCT373R	★ **3054** 586-134
MD74HCT374R	★ **3055** 581-76
MD74HCT540R	★ **3056** 573-99
MD74HCT541R	★ **3057** 573-100
MD74HCT573R	★ **3058** 586-135
MD74HCT574R	★ **3059** 581-77
MD74SC137	579-3
MD74SC138	578-152
MD74SC139	578-110
MD74SC240	594-10
MD74SC241	594-48
MD74SC244	593-164
MD74SC245	594-138
	2678-34
MD74SC373	586-192
MD74SC374	581-78
MD74SC540	573-101
MD74SC541	573-102
MD74SC573	586-136
MD74SC574	581-79
MH88210	3219-9
	¶ 298-9
	¶ 298-11
MH88305	3219-10
	¶ 298-9
	¶ 298-11
MH88315	3218-48
MH88500	3218-84
MH88505	3218-70
MH88506	3218-71
MH88510	3218-72
MH89700	3217-59
MH89750	3217-62
ML8204	3219-25
	¶ 299-5
ML8205	3219-26
	¶ 299-5
MT3506	3216-59
MT3507	3216-89
MT3507A	3216-90
MT4320	3217-38
MT4322	3217-39
MT4323	3217-40
MT4325	3217-41
MT4326	3217-42
MT4327	3217-43
MT5089	3219-71
MT8804B	3216-145
MT8860	3218-131
	¶ 298-11
MT8862	3218-132
	¶ 298-11
MT8863	3218-133
	¶ 298-11
MT8865	3216-18
	¶ 298-9
	¶ 298-11
MT8870	3219-11
	¶ 298-9
MT8960	3216-91
MT8961	3216-60
MT8962	3216-92
MT8963	3216-61
MT8964	3216-93
MT8965	3216-62
MT8981	3217-61
	1342-161

Monolithic Memories, Inc.

Device	Page-Line
5055	3755-8
5086	★ **819** 627-99
	★ **819** 3756-3
5087	★ **819** 627-100
	★ **819** 3756-4
5155	3755-9
5255-1	3783-82
5256-1	3783-83
5260-1	3783-78
5261-1	3783-79
5275-1	3783-111
5276-1	3783-112
5280-1	3783-43
5280-2	3783-34
5281-1	3783-45
5281-2	3783-35
5282-1	3783-44
5283-1	3783-46
5290	3755-32
5291	3755-33
5292	3783-108
5293	3783-109
5300-1	3760-119
5301-1	3760-123
5305-1	3761-71
5306-1	3761-73
5308-1	3761-18
5309-1	3761-20
5330-1	3760-51
5331-1	3760-53
5340-1	3762-41
5340-2	3762-51
5341-1	3762-44
5341-2	3762-35
5348-1	3762-40
5349-1	3762-43
5350-1	3763-5
5351-1	3763-8
5352-1	3763-6
5353-1	3763-9
5380-1	3763-111
5380-2	3763-97
5381-1	3763-112
5381-2	3763-77
5388-1	3764-64
5389-1	3764-65
5389-2	3764-53
53D1641	★ **4041** 3765-97
53LS140	3760-120
53LS141	3760-124
53LS240	3761-72
53LS241	3761-74
53RA1681	★ **4035** 3764-97
53RA1681A	★ **4035** 3764-93
53RA441	★ **4030** 3762-108
53RS1681	★ **4038** 3764-98
53RS1681A	★ **4038** 3764-94
53RS881	★ **4032** 3763-55
53S080	★ **4026** 4482-87
	★ **4026** 3760-25
53S081	★ **4026** 4482-88
	★ **4026** 3760-28
53S140	★ **4026** 3760-92
53S141	★ **4026** 3760-96
53S1641	★ **4026** 3765-116
53S1641A	★ **4026** 4482-90
	★ **4026** 3765-106
53S1681	★ **4026** 3765-24
53S1681A	★ **4026** 3764-124
53S240	★ **4026** 3761-41
53S241	★ **4026** 3761-44
53S3281	★ **4026**
53S441	★ **4026** 3762-106
53S441A	★ **4026** 4482-82
	★ **4026** 3762-95
53S841	★ **4026** 3764-37
53S841A	★ **4026** 4482-84
	★ **4026** 3764-28
54S730	1337-27
54S734	1337-28
57558	604-166
57558-1	604-167
6055	3755-10
6056	3755-17
6061	3755-18
6062	3755-19
6071	3755-34
6072	3755-35
6086	★ **819** 627-101
	★ **819** 3756-5
6087	★ **819** 627-102
	★ **819** 3756-6
6155	3755-11
6156	3755-20
6161	3755-21
6162	3755-22
6171	3755-36
6172	3755-37
6255-1	3783-80
6256-1	3783-81
6260-1	3783-76
6261-1	3783-77
6275-1	3783-109
6276-1	3783-110
6280-1	3783-36
6280-2	3783-30
6281-1	3783-38
6281-2	3783-31
6282-1	3783-37
6283-1	3783-39
6290	3783-90
6291	3783-91
6292	3783-110
6293	3783-111
6300-1	3760-93
6301-1	3760-97
6305-1	3761-51
6306-1	3761-54
6308-1	3761-11
6309-1	3761-14
6330-1	3760-39
6331-1	3760-45
6335-1	3761-13
6336-1	3761-17
6340-1	3762-28
6341-1	3762-36
6341-2	3761-125
6348-1	3762-25
6349-1	3762-29
6349-2	3761-122
6350-1	3762-111
6351-1	3762-116
6352-1	3762-112
6353-1	3762-117
6353-2	3762-107
6380-1	3763-98
6380-2	3763-74
6381-1	3763-101
6381-2	3763-56
6388-1	3764-50
6389-1	3764-54
6389-2	3764-38
63D1641	★ **4041** 3765-96
63LS140	3760-94
63LS141	3760-98
63LS240	3761-52

¶ Indicates page number in Application Note Directory.
★ Indicates additional data is provided on the page noted.

IC MASTER

Monolithic Memories, Inc. (Cont'd)

Device	Page-Line
63LS241	3761-55
63RA1681	★ 4035
	3764-95
63RA1681A	★ 4035
	3764-78
63RA441	★ 4030
	3762-92
63RS1681	★ 4038
	3764-96
63RS1681A	★ 4038
	3764-79
63RS881	3763-34
63S080	★ 4026
	4482-85
	★ 4026
	3760-21
63S081	★ 4026
	4482-86
	★ 4026
	3760-23
63S140	★ 4026
	3760-79
63S141	★ 4026
	3760-82
63S1641	★ 4026
	3765-107
63S1641A	★ 4026
	4482-89
	★ 4026
	3765-92
63S1681	★ 4026
	3764-125
63S1681A	★ 4026
	3764-88
63S240	★ 4026
	3761-31
63S241	★ 4026
	3761-32
63S3281	★ 4026
63S441	★ 4026
	3762-89
63S441A	★ 4026
	4482-81
	★ 4026
	3762-73
63S841	★ 4026
	3764-29
63S841A	★ 4026
	4482-83
	★ 4026
	3764-11
67558	604-168
67558-1	604-169
74S409	2680-116
74S730	1337-29
74S734	1337-30
C-HAL16L8	4483-35
C-HAL16R4	4483-36
C-HAL16R6	4483-37
C-HAL16R8	4483-38
C57401	★ 805
	3757-41
C57401A	★ 805
	3757-50
C57402	★ 805
	3757-56
C57402A	★ 805
	3757-59
C67401	★ 805
	3757-51
C67401A	★ 805
	3757-54
C67401B	★ 805
	3757-55
C67402	★ 805
	3757-60
C67402B	★ 805
	3757-63
DP8408	2680-112
DP8409	2680-117
HAL10H8-2C	★ 4776
	★ 4782
	★ 4788
	4484-18
HAL10H8C	★ 4776
	★ 4782
	4483-39
HAL10H8M	★ 4776
	★ 4782
	4483-109
HAL10L8-2C	★ 4776
	★ 4782
	★ 4788
	4484-19
HAL10L8C	★ 4776
	★ 4782
	4483-40
HAL10L8M	★ 4776
	★ 4782
	4483-110
HAL12H6-2C	★ 4776
	★ 4782
	★ 4788
	4484-20
HAL12H6C	★ 4776
	★ 4782
	4483-41
HAL12H6M	★ 4776
	★ 4782
	4483-111
HAL12L10C	★ 4776
	★ 4783
	4483-99
HAL12L10M	★ 4776
	★ 4783
	4483-112
HAL12L6-2C	★ 4776
	★ 4782
	★ 4788
	4484-21
HAL12L6C	★ 4776
	★ 4782
	4483-42
HAL12L6M	★ 4776
	★ 4782
	4483-113
HAL14H4-2C	★ 4776
	★ 4782
	★ 4788
	4484-22
HAL14H4C	★ 4776
	★ 4782
	4483-43
HAL14H4M	★ 4776
	★ 4782
	4483-114
HAL14L4-2C	★ 4776
	★ 4782
	★ 4788
	4484-23
HAL14L4C	★ 4776
	★ 4782
	4483-44
HAL14L4M	★ 4776
	★ 4782
	4483-115
HAL14L8C	★ 4776
	★ 4783
	4483-100
HAL16A4C	★ 4776
	★ 4784
	4483-101
HAL16A4M	★ 4776
	★ 4784
	4483-116
HAL16C1-2C	★ 4776
	★ 4782
	★ 4788
	4484-24
HAL16C1C	★ 4776
	★ 4782
	4483-102
HAL16C1M	★ 4776
	★ 4782
	4483-117
HAL16H2-2C	★ 4776
	★ 4782
	4484-25
HAL16H2C	★ 4776
	★ 4782
	4483-45
HAL16H2M	★ 4776
	★ 4782
	4483-118
HAL16L2-2C	★ 4776
	★ 4782
	★ 4788
	4484-26
HAL16L2C	★ 4776
	★ 4782
	4483-46
HAL16L2M	★ 4776
	★ 4782
	4483-119
HAL16L6C	★ 4776
	★ 4783
	4483-103
HAL16L6M	★ 4776
	★ 4783
	4484-1
HAL16L8-2C	★ 4776
	★ 4784
	★ 4789
	4484-10
HAL16L8-4C	★ 4776
	★ 4784
	★ 4790
	4484-32
HAL16L8AC	★ 4776
	★ 4784
	★ 4786
	4483-23
HAL16L8C	★ 4776
	★ 4784
	4483-47
HAL16L8M	★ 4776
	★ 4784
	4484-2
HAL16R4-2C	★ 4776
	★ 4784
	★ 4789
	4484-11
HAL16R4-4C	★ 4776
	★ 4784
	★ 4790
	4484-33
HAL16R4AC	★ 4776
	★ 4784
	★ 4786
	4483-24
HAL16R4C	★ 4776
	★ 4784
	4483-48
HAL16R4M	★ 4776
	★ 4784
	4484-3
HAL16R6-2C	★ 4776
	★ 4784
	★ 4789
	4484-12
HAL16R6-4C	★ 4776
	★ 4784
	★ 4790
	4484-34
HAL16R6AC	★ 4776
	★ 4784
	★ 4786
	4483-25
HAL16R6C	★ 4776
	★ 4784
	4483-49
HAL16R6M	★ 4776
	★ 4784
	4484-4
HAL16R8-2C	★ 4776
	★ 4784
	★ 4789
	4484-13
HAL16R8-4C	★ 4776
	★ 4784
	★ 4790
	4484-35
HAL16R8AC	★ 4776
	★ 4784
	★ 4786
	4483-26
HAL16R8C	★ 4776
	★ 4784
	4483-50
HAL16R8M	★ 4776
	★ 4784
	4484-5
HAL16X4C	★ 4776
	★ 4784
	4483-104
HAL16X4M	★ 4776
	★ 4784
	4484-6
HAL18L4C	★ 4776
	★ 4783
	4483-105
HAL18L4M	★ 4776
	★ 4783
	4484-7
HAL20C1C	★ 4776
	★ 4783
	4483-106
HAL20C1M	★ 4776
	★ 4783
	4484-27
HAL20L10C	★ 4776
	★ 4785
	4484-14
HAL20L10M	★ 4776
	★ 4785
	4484-28
HAL20L2C	★ 4776
	★ 4783
	4483-107
HAL20L2M	★ 4776
	★ 4783
	4484-8
HAL20L8AC	★ 4776
	★ 4787
	4483-27
HAL20L8AM	★ 4776
	4483-31
HAL20R4AC	★ 4776
	★ 4787
	4483-28
HAL20R4AM	★ 4776
	4483-32
HAL20R6AC	★ 4776
	★ 4787
	4483-29
HAL20R6AM	★ 4776
	4483-33
HAL20R8AC	★ 4776
	★ 4787
	4483-30
HAL20R8AM	★ 4776
	4483-34
HAL20X10C	★ 4776
	★ 4785
	4484-15
HAL20X10M	★ 4776
	★ 4785
	4484-29
HAL20X4C	★ 4776
	★ 4785
	4484-16
HAL20X4M	★ 4776
	★ 4785
	4484-30
HAL20X8C	★ 4776
	★ 4785
	4484-17
HAL20X8M	★ 4776
	★ 4785
	4484-31
HAL24L8M	4484-9
HD6600	★ 819
	638-15
HD6605	★ 819
	638-16
PAL10H-2M	4482-18
PAL10H3-2C	4481-127
PAL10H8C	★ 4768
	4481-2
PAL10H8M	★ 4768
	4481-79
PAL10L8-2C	★ 4768
	4481-128
PAL10L8-2M	★ 4768
	4482-19
PAL10L8C	★ 4768
	4481-3
PAL10L8M	★ 4768
	4481-80
PAL12H6-2C	★ 4768
	4481-129
PAL12H6-2M	★ 4768
	4482-20
PAL12H6C	★ 4768
	4481-4
PAL12H6M	★ 4768
	4481-81
PAL12L10C	★ 4768
	4481-45
PAL12L10M	★ 4768
	4481-46
PAL12L6-2C	★ 4768
	4481-130
PAL12L6-2M	★ 4768
	4482-21
PAL12L6C	★ 4768
	4481-5
PAL12L6M	★ 4768
	4481-82
PAL14H4-2C	★ 4768
	4481-131
PAL14H4-2M	★ 4768
	4482-22
PAL14H4C	★ 4768
	4481-6
PAL14H4M	★ 4768
	4481-83
PAL14L4-2C	★ 4768
	4481-132
PAL14L4-2M	★ 4768
	4482-23
PAL14L4C	★ 4768
	4481-7
PAL14L4M	★ 4768
	4481-84
PAL14L8C	★ 4768
	4481-47
PAL14L8M	★ 4768
	4481-48
PAL16A4C	★ 4768
	4481-49
PAL16A4M	★ 4768
	4481-85
PAL16C1-2C	★ 4768
	4481-133
PAL16C1-2M	★ 4768
	4482-24
PAL16C1C	★ 4768
	4481-50
PAL16C1M	★ 4768
	4481-86
PAL16H2-2C	★ 4768
	4481-134
PAL16H2-2M	★ 4768
	4482-25
PAL16H2C	★ 4768
	4481-8
PAL16H2M	★ 4768
	4481-87
PAL16L2-2C	★ 4768
	4482-1
PAL16L2-2M	★ 4768
	4482-26
PAL16L2C	★ 4768
	4481-9
PAL16L2M	★ 4768
	4481-88
PAL16L6C	★ 4768
	4481-51
PAL16L6M	★ 4768
	4481-52
PAL16L8-2C	★ 4768
	4481-107
PAL16L8-2M	★ 4768
	4482-10
PAL16L8-4C	★ 4768
	4482-27
PAL16L8-4M	★ 4768
	4482-31
PAL16L8A-2C	★ 4768
	4481-10
PAL16L8A-2M	★ 4768
	4481-108
PAL16L8A-4C	★ 4768
	4481-123
PAL16L8A-4M	★ 4768
	4482-14
PAL16L8AC	★ 4768
	4480-33
PAL16L8AM	★ 4768
	4480-66
PAL16L8C	★ 4768
	4481-11
PAL16L8M	★ 4768
	4481-89
PAL16R4-2C	★ 4768
	4481-109
PAL16R4-2M	★ 4768
	4482-11
PAL16R4-4C	★ 4768
	4482-28
PAL16R4-4M	★ 4768
	4482-32
PAL16R4A-2C	★ 4768
	4481-12
PAL16R4A-2M	★ 4768
	4481-110
PAL16R4A-4C	★ 4768
	4481-124
PAL16R4A-4M	★ 4768
	4482-15
PAL16R4AC	★ 4768
	4480-34
PAL16R4AM	★ 4768
	4480-67
PAL16R4C	★ 4768
	4481-13
PAL16R4M	★ 4768
	4481-90
PAL16R6-2C	★ 4768
	4481-111
PAL16R6-2M	★ 4768
	4482-12
PAL16R6-4C	★ 4768
	4482-29
PAL16R6-4M	★ 4768
	4482-33
PAL16R6A-2C	★ 4768
	4481-14
PAL16R6A-2M	★ 4768
	4481-112
PAL16R6A-4C	★ 4768
	4481-125
PAL16R6A-4M	★ 4768
	4482-16
PAL16R6AC	★ 4768
	4480-35
PAL16R6AM	★ 4768
	4480-68
PAL16R6C	★ 4768
	4481-15
PAL16R6M	★ 4768
	4481-91
PAL16R8-2C	★ 4768
	4481-113
PAL16R8-2M	★ 4768
	4482-13
PAL16R8-4C	★ 4768
	4482-30
PAL16R8-4M	★ 4768
	4482-34
PAL16R8A-2C	★ 4768
	4481-16
PAL16R8A-2M	★ 4768
	4481-114
PAL16R8A-4C	★ 4768
	4481-126
PAL16R8A-4M	★ 4768
	4482-17
PAL16R8AC	★ 4768
	4480-36
PAL16R8AM	★ 4768
	4480-69
PAL16R8C	★ 4768
	4481-17
PAL16R8M	★ 4768
	4481-92
PAL16X4C	★ 4768
	4481-53
PAL16X4M	★ 4768
	4481-93
PAL18L4C	★ 4768
	4481-54
PAL18L4M	★ 4768
	4481-55
PAL20C1C	★ 4768
	4481-56
PAL20C1M	★ 4768
	4481-57
PAL20L10C	★ 4768
	4482-2
PAL20L10M	★ 4768
	4481-115
PAL20L2C	★ 4768
	4481-58
PAL20L2M	★ 4768
	4481-59
PAL20L8AC	★ 4768
	4480-37
PAL20L8AM	★ 4768
	4480-70
PAL20R4AC	★ 4768
	4480-38

Arranged alphanumerically from left to right.

© IC MASTER 1984

Monolithic Memories, Inc. (Cont'd)

Device	Page-Line
PAL20R4AM	★ 4768
	4480-71
PAL20R6AC	★ 4768
	4480-39
PAL20R6AM	★ 4768
	4480-72
PAL20R8AC	★ 4768
	4480-40
PAL20R8AM	★ 4768
	4480-73
PAL20X10C	★ 4768
	4482-3
PAL20X10M	★ 4768
	4481-116
PAL20X4C	★ 4768
	4482-4
PAL20X4M	★ 4768
	4481-117
PAL20X8C	★ 4768
	4482-5
PAL20X8M	★ 4768
	4481-118
SN54LS210	★ 804
	633-166
SN54LS240	★ 804
	633-167
	★ 804
	2669-62
SN54LS241	★ 804
	634-41
	★ 804
	2669-10
SN54LS244	★ 804
	634-93
	★ 804
	2669-11
SN54LS245	★ 804
	635-111
	★ 804
	2669-12
SN54LS273	★ 804
	616-76
SN54LS310	★ 804
	634-42
SN54LS340	★ 804
	633-168
	★ 804
	2669-63
SN54LS341	★ 804
	634-43
	★ 804
	2669-13
SN54LS344	★ 804
	634-94
	★ 804
	2669-14
SN54LS373	★ 804
	626-71
SN54LS374	★ 804
	616-128
SN54LS377	★ 804
	616-157
SN54LS380	632-157
SN54LS450	630-88
SN54LS451	628-75
SN54LS453	629-117
SN54LS461	608-153
SN54LS491	611-172
SN54LS498	632-155
SN54LS533	★ 804
	626-130
SN54LS534	★ 804
	616-56
SN54LS645	★ 804
	635-112
	★ 804
	2677-25
SN54LS645-1	★ 804
	2677-26
SN54S148	★ 819
SN54S182	★ 819
	604-100
SN54S210	★ 804
	607-118
	633-140
SN54S240	★ 804
	634-3
	★ 804
	2669-64
SN54S241	★ 804
	634-63
	★ 804
	2669-15
SN54S244	★ 804
	634-103
	★ 804
	2669-16
SN54S273	★ 804
	616-85
SN54S348	★ 819
	639-58
SN54S373	★ 804
	626-89
SN54S374	★ 804
	616-140
SN54S377	★ 804
	616-166
SN54S381	★ 819
	604-65
SN54S383	★ 804
SN54S508	★ 810
	603-1
SN54S516	★ 813
	604-110
SN54S533	★ 804
	626-135
SN54S534	★ 804
	616-58
SN54S557	★ 816
	605-7
SN54S558	★ 816
	605-8
SN54S700	★ 804
	★ 819
	2683-102
SN54S730	★ 804
	★ 819
	2683-103
SN54S731	★ 804
	★ 819
	2683-104
SN54S734	★ 804
	★ 819
	2683-105
SN74LS210	★ 804
	633-169
SN74LS240	★ 804
	633-170
	★ 804
	2669-65
SN74LS241	★ 804
	634-44
	★ 804
	2669-17
SN74LS244	★ 804
	634-95
	★ 804
	2669-18
SN74LS245	★ 804
	635-113
	★ 804
	2669-19
SN74LS273	★ 804
	616-77
SN74LS310	★ 804
	634-45
SN74LS340	★ 804
	633-171
SN74LS341	★ 804
	634-46
	★ 804
	2669-20
SN74LS344	★ 804
	634-96
	★ 804
	2669-21
SN74LS373	★ 804
	626-72
SN74LS374	★ 804
	616-129
SN74LS377	★ 804
	616-158
SN74LS380	632-158
SN74LS450	630-89
SN74LS451	628-76
SN74LS453	629-118
SN74LS461	608-154
SN74LS491	611-173
SN74LS498	632-156
SN74LS533	★ 804
	626-131
SN74LS534	★ 804
	616-57
SN74LS645	★ 804
	635-114
	★ 804
	2677-52
SN74LS645-1	★ 804
	635-115
	★ 804
	2677-53
SN74S148	★ 819
	639-59
SN74S182	★ 819
	604-101
SN74S210	★ 804
	607-119
	633-141
SN74S240	★ 804
	634-4
	★ 804
	2669-66
SN74S241	★ 804
	634-64
	★ 804
	2669-22
SN74S244	★ 804
	634-104
	★ 804
	2669-23
SN74S273	★ 804
	616-86
SN74S348	★ 819
	639-60
SN74S373	★ 804
	626-90
SN74S374	★ 804
	616-141
SN74S377	★ 804
	616-167
SN74S381	★ 819
	604-66
SN74S383	★ 804
SN74S408	★ 819
	2680-113
SN74S408-3	★ 819
	2680-114
SN74S409	★ 819
	2680-118
SN74S508	★ 810
	603-2
SN74S516	★ 813
	604-111
SN74S531	★ 804
	626-91
SN74S532	★ 804
	616-142
SN74S533	★ 804
	626-136
SN74S534	★ 804
	616-59
SN74S535	★ 804
	626-137
SN74S536	★ 804
	616-60
SN74S557	★ 816
	605-9
SN74S558	★ 816
	605-10
SN74S700	★ 804
	★ 819
	2683-106
SN74S730	★ 804
	★ 819
	2683-107
SN74S731	★ 804
	★ 819
	2683-108
SN74S734	★ 804
	★ 819
	2683-109
SYM3316	3783-100
SYM3316A	3783-101

Motorola Semiconductor Products

Device	Page-Line
AD562	★ 3069
	2650-36
AD563	★ 3069
	2650-37
AM26LS31	★ 3064
	2671-36
AM26LS31C	★ 3064
	2671-37
AM26LS31M	★ 3064
	2671-38
AM26LS32 REC	★ 3064
C68A29	1343-26
CA3054	3157-39
CA3059	3239-91
CA3079	3239-92
DAC-08	★ 3069
	2640-22
DAC-08A	★ 3069
	2639-16
DAC-08C	★ 3069
	2642-28
DAC-08E	★ 3069
	2640-37
DAC-08H	★ 3069
	2639-17
DG10H161	596-78
DG10H162	596-70
DS8641	2675-39
EXORSET110	★ 1922
EXORciser	★ 1923
EXORciserII	1815-3
EXORmacs	★ 1915
EXORsetDS35	1815-4
HCA6306	4466-22
HCA6312	4466-24
HCA6324	4466-28
HCA6348	4466-30
HDS-200	★ 1919
	1815-5
HDS-400	1815-6
LF155	3175-49
	3186-12
LF155A	3189-42
LF156A	3189-52
LF157A	3189-32
LF347	3213-21
LF347B	3211-25
LF351	3175-46
	3200-61
LF353	3209-28
LF355	3200-45
LF355A	3189-43
LF355B	3194-55
LF356	3200-50
LF356A	3189-53
LF356B	3195-3
LF357	3200-40
LF357A	3189-33
LF357B	3194-48
LM101A	3175-18
	3191-34
LM107	3191-18
LM108	3190-40
LM108A	3186-26
LM109H	★ 3531
	3221-21
LM109K	★ 3531
	3221-60
LM11	3184-55
LM111	3159-41
LM112	3190-27
LM117	★ 3532
	3228-116
LM117L	★ 3532
	3228-97
LM117M	★ 3532
	3229-26
LM11C	3187-16
LM123	★ 3531
	3221-129
LM123A	★ 3531
	3221-130
LM124	3180-50
LM137	★ 3532
	3229-88
LM137M	★ 3532
	3229-89
LM139	3162-54
LM139A	3162-23
LM140-12	★ 3531
	3223-90
LM140-15	★ 3531
	3224-63
LM140-18	★ 3531
	3225-7
LM140-24	★ 3531
	3225-93
LM140-5	★ 3531
	3221-85
LM140-6	★ 3531
	3222-50
LM140-8	★ 3531
	3222-117
LM148	3211-33
LM150	★ 3532
	3228-62
LM158	3180-21
	3207-8
LM201A	3191-35
LM207	3191-19
LM208	3190-41
LM208A	3186-27
LM209H	★ 3531
	3221-22
LM209K	★ 3531
	3221-61
LM211	3159-42
LM212	3190-28
LM217	★ 3532
	3228-117
LM217L	★ 3532
	3228-98
LM217M	★ 3532
	3229-27
LM223	★ 3531
	3221-131
LM223A	★ 3531
	3221-132
LM224	3180-51
LM237	★ 3532
	3229-90
LM237M	★ 3532
	3229-91
LM239	3163-10
LM239A	3162-34
LM250	★ 3532
	3228-63
LM258	3180-22
	3208-22
LM285-1	★ 3535
	3236-61
LM285-2	★ 3535
	3236-105
LM2901	3163-30
LM2902	3180-7
LM2904	3180-8
LM2931-5	3221-7
LM301A	3199-50
LM307	3199-41
LM308	3199-33
LM308A	3186-54
LM309H	★ 3531
	3221-23
LM309K	★ 3531
	3221-62
LM311	3160-28
LM312	3199-26
LM317	★ 3532
	3228-118
LM317L	★ 3532
	3228-99
LM317M	★ 3532
	3229-28
LM323	★ 3531
	3221-133
LM323A	★ 3531
	3221-134
LM324	3180-52
LM337	★ 3532
	3229-92
LM337M	★ 3532
	3229-93
LM339	3163-11
LM339A	3162-35
LM340-12	★ 3531
	3223-91
LM340-15	★ 3531
	3224-64
LM340-18	★ 3531
	3225-8
LM340-24	★ 3531
	3225-94
LM340-5	★ 3531
	3221-86
LM340-6	★ 3531
	3222-51
LM340-8	★ 3531
	3222-118
LM350	★ 3532
	3228-64
LM358	3180-23
	3208-23
LM385-1	★ 3535
	3236-62
LM385-2	★ 3535
	3236-106
LM385B-1	★ 3535
	3236-63
LM385B-2	★ 3535
	3236-107
LM565	3215-1
M1468705EVM	★ 1921
M68000(EXORmacs)	★ 1915
	1815-7
M6800EXOR	★ 1923
	¶ 261-16
M6800UPDWNLD	★ 1924
	¶ 261-16
M6808SA	★ 1923
M6809BASMR	★ 1924
M6809EXOR	★ 1923
M6809FORTRN	★ 1924
M6809MPL	★ 1924
M6809PASCLC	★ 1924
M68705EVM	★ 1921
M68BASR010M	★ 1924
M68BSA1-1	★ 1920
M68BSA2	★ 1920
M68BSA3	★ 1920
M68BSA4	★ 1920
M68BSA5	★ 1920
M68BSA6	★ 1920
M68BSAC	★ 1920
M68BSACE	★ 1920
M68DSK2	★ 1925
M68DSK3	★ 1925
M68EDITM	★ 1924
M68FTNR012M	★ 1924
M68KFD1102	★ 1925
M68KHDS16-1	★ 1925
M68KHDS32-1	★ 1925
M68KHDS50-1	★ 1925
M68KHDS96-1	★ 1925
M68KOFORTRNH	★ 1917
M68KOPASCALH	★ 1917
M68KORMS68K	★ 2041
M68KOVDOS	★ 2041
M68KVM01A	★ 2042
M68KVM02	★ 2042
	1967-2
M68KVM03	★ 2043
M68KVM10	★ 2043
M68KVM11	★ 2043
M68KVM20	★ 2043
M68KVM21	★ 2043
M68KVM30	★ 2043
M68KVM60	★ 2043
M68KVM80	★ 2043
M68MDOC	★ 1924
M68MM01	★ 2045
	1959-12
M68MM01A2	★ 2045
	1959-13
M68MM01B	★ 2045
	★ 2045
	1959-29
M68MM01B1A	★ 2045
	1959-30
M68MM01D	★ 2045
	★ 2045
	1959-14
M68MM03	★ 2046
M68MM04	★ 2046
M68MM04A	★ 2046
M68MM05	★ 2045
M68MM05A	★ 2045
M68MM05B	★ 2045
M68MM06	★ 2046
M68MM07	★ 2046
M68MM09	★ 2046
M68MM11	★ 2046
M68MM12	★ 2046

¶ Indicates page number in Application Note Directory.
★ Indicates additional data is provided on the page noted.

IC MASTER

Motorola Semiconductor Products (Cont'd)

Device	Page-Line
M68MM12-1	★ 2046
M68MM12A	★ 2046
M68MM13A	★ 2046
M68MM13B	★ 2046
M68MM13C	★ 2046
M68MM13D	★ 2046
M68MM15A	★ 2045
M68MM15A1	★ 2045
M68MM15B	★ 2045
M68MM15BEX	★ 2045
M68MM15C1	★ 2045
M68MM15CV	★ 2045
M68MM16-1	★ 2046
M68MM16-2	★ 2046
M68MM16-3	★ 2046
M68MM17	1961-8
M68MM18	★ 2046
M68MM19	1961-9
M68MM19-1	★ 2045
M68MM19A	1961-21
M68MM19A1	★ 2045
M68MM21	★ 2046
M68MM21-1	★ 2046
M68MM22	★ 2046
M68MMCC05	★ 2046
M68MMCC10	★ 2046
M68MMFLC1	★ 2046
M68MMLC1	★ 2046
M68MMPS-1	★ 2046
M68MMSC1	★ 2046
M68MPLR020M	★ 1924
M68PP5	★ 1923
M68RAD1	★ 2044
M68RI01	★ 2044
M68RSC1	★ 2043
M68RTFR02M	★ 1924
M68RW1N1-2	★ 2044
M68RW1N1-1	★ 2044
M68SP702C10	★ 1925
M68SXD10155A	★ 1925
M68XDOC	★ 1924
MBM2011A	3768-5
MBM2256	3768-9
MC10100	597-42
MC10101	597-65
	¶ 256-10
MC10102	597-36
MC10103	597-5
MC10104	596-142
MC10105	597-57
MC10106	597-29
MC10107	597-106
MC10109	597-50
MC10110	596-155
MC10111	597-15
	¶ 285-12
MC10113	597-99
MC10114	598-139
MC10115	598-156
	¶ 256-12
MC10116	598-140
	¶ 256-10
	¶ 256-12
MC10117	597-86
MC10118	597-72
MC10119	597-79
MC10121	597-93
MC10123	596-99
	¶ 285-12
MC10124	598-117
	¶ 256-12
MC10125	598-109
	¶ 256-12
MC10128	596-95
	¶ 256-12
MC10129	598-152
	¶ 256-12
MC10130	597-114
MC10131	596-112
MC10132	597-127
MC10133	597-139
MC10134	597-121
MC10135	596-133
	¶ 257-5
MC10136	596-54
MC10137	596-62
MC10138	596-58
MC10141	598-96
	3789-31
MC10148	598-10
MC10153	597-140
MC10154	596-46
MC10158	598-80
MC10159	598-74
MC10160	599-4
MC10161	596-79
MC10162	596-71
MC10163	598-125
	2665-20
MC10164	598-87
MC10165	598-164
MC10166	596-30
MC10168	597-132
MC10170	598-169
MC10171	596-91
MC10172	596-85
MC10173	597-146
MC10174	598-67
MC10175	597-152
MC10176	596-126
MC10177	598-102
MC10178	596-47
MC10179	596-5
	¶ 256-14
MC10180	596-12
	¶ 256-14
MC10181	596-25
	¶ 256-14
MC10182	596-16
MC10183	596-20
MC10186	596-121
MC10188	596-36
MC10189	596-41
MC10190	598-103
MC10191	598-121
MC10192	596-104
MC10193	598-126
	2665-21
MC10194	598-132
	¶ 288-14
MC10195	596-39
MC10197	596-146
MC10198	598-92
MC10210	596-156
MC10211	597-16
MC10212	597-23
MC10216	598-141
	¶ 256-12
MC10231	596-113
MC10287	596-18
MC10315L	★ 3070
	2625-22
	¶ 282-10
	¶ 316-8
MC10317L	★ 3070
	2625-23
	¶ 282-10
	¶ 316-8
MC10318	★ 3069
	2640-9
MC10318-9	★ 3069
	2639-7
MC10318C-6	★ 3069
	2642-44
MC10318C-7	★ 3069
	2642-23
MC10500	597-43
MC10501	597-66
MC10502	597-37
MC10503	597-6
MC10504	596-143
MC10505	597-58
MC10506	597-30
MC10507	597-107
MC10509	597-51
MC10513	597-100
MC10514	598-142
MC10515	598-157
MC10516	598-143
MC10517	597-87
MC10518	597-73
MC10519	597-80
MC10521	597-94
MC10524	598-118
MC10525	598-110
MC10530	597-115
MC10531	596-114
MC10532	597-128
MC10533	597-141
MC10534	597-122
MC10535	596-134
MC10536	596-55
MC10537	596-63
MC10538	596-59
MC10541	598-97
	3789-32
MC10553	597-142
MC10554	596-48
MC10558	598-81
MC10559	598-75
MC10560	599-5
MC10561	596-80
MC10562	596-72
MC10563	598-127
	2665-22
MC10564	598-88
MC10565	598-165
MC10566	596-31
MC10568	597-133
MC10571	596-92
MC10572	596-86
MC10574	598-68
MC10575	597-153
MC10576	596-127
MC10578	596-49
MC10579	596-6
MC10580	596-13
MC10581	596-26
MC10582	596-17
MC10586	596-122
MC10590	598-104
MC10591	598-122
MC10593	598-128
	2665-23
MC10594	598-133
MC10595	596-40
MC10597	596-147
MC10610	596-157
MC10611	597-17
MC10612	597-24
MC10616	598-144
MC10631	596-115
MC10687	596-19
MC10800	596-21
	¶ 276-7
	1337-54
	¶ 276-7
	1257-9
	¶ 276-7
MC10801	1337-59
	¶ 271-12
MC10804	1337-55
MC10805	1337-56
MC10806	1337-61
MC10807	1337-57
MC10808	1337-60
MC10900	★ 4796
	596-34
MC10901	★ 4796
	596-33
MC10902	★ 4796
	596-35
	★ 4796
	1257-10
MC10904	★ 4796
	598-130
MC10905	★ 4796
	598-129
MC10H016	★ 821
	596-50
MC10H100	★ 821
	597-44
MC10H101	★ 821
	597-67
MC10H102	★ 821
	597-38
MC10H103	★ 821
	597-7
MC10H104	★ 821
	596-144
MC10H105	★ 821
	597-59
MC10H106	★ 821
	597-31
MC10H107	★ 821
	597-108
MC10H109	★ 821
	597-52
MC10H113	★ 821
	597-101
MC10H115	★ 821
	598-158
MC10H116	★ 821
	598-145
MC10H117	★ 821
	597-88
MC10H118	★ 821
	597-74
MC10H119	★ 821
	597-81
MC10H121	★ 821
	597-95
MC10H123	★ 821
	596-100
MC10H124	★ 821
	598-119
MC10H125	★ 821
	598-111
MC10H130	★ 821
	597-116
MC10H131	★ 821
	596-116
MC10H135	★ 821
	596-135
MC10H136	★ 821
	596-56
MC10H141	★ 821
	598-98
MC10H145	★ 821
	598-2
	★ 821
	3770-71
MC10H155	★ 821
	597-157
MC10H158	★ 821
	598-82
MC10H159	★ 821
	598-76
MC10H160	★ 821
	599-6
MC10H161	★ 821
	596-81
MC10H162	★ 821
	596-73
MC10H164	★ 821
	598-89
MC10H165	★ 821
	598-166
MC10H166	★ 821
	596-32
MC10H171	★ 821
	596-93
MC10H172	★ 821
	596-87
MC10H173	★ 821
	597-147
MC10H174	★ 821
	598-69
MC10H175	★ 821
	597-154
MC10H176	★ 821
	596-128
MC10H179	★ 821
	596-7
MC10H180	596-14
MC10H181	★ 821
	596-27
MC10H186A	★ 821
	596-123
MC10H188	★ 821
	596-37
MC10H189	★ 821
	596-42
MC10H209	★ 821
	600-44
MC10H210	★ 821
	597-1
MC10H211	★ 821
MC10H330	★ 821
	598-151
MC10H332	★ 821
	598-131
MC10H334	★ 821
	598-150
MC10H350	★ 821
	598-105
MC10H423	★ 821
	596-96
MC10H424	★ 821
	598-113
MC10KHSeries	★ 821
MC10KSeries	★ 821
MC12000	637-69
MC12000Series	★ 820
MC12009	640-90
	¶ 309-11
	3215-55
	3215-59
	¶ 309-11
MC12011	640-97
	¶ 309-11
	3215-62
	¶ 309-11
MC12013	640-106
	¶ 309-11
	3215-67
	¶ 309-11
MC12014	3214-7
MC12015	3215-75
MC12016	3215-78
MC12017	3215-83
MC12018	3215-86
MC12019	598-160
	3215-74
MC12022	3215-88
MC12023	3214-74
MC12040	3214-54
MC12061	3214-8
	¶ 310-2
MC12071	641-20
	3214-68
	3215-79
MC12073	3214-73
MC12074	3214-75
MC12075	3214-76
MC12090	3214-77
MC12500	637-70
MC12500Series	★ 820
MC12509	640-91
	3215-56
	3215-60
MC12511	640-98
	3215-63
MC12513	640-107
	3215-68
MC12540	3214-55
MC12561	3214-9
MC13001	3172-106
MC13002	3172-107
MC13010	3172-108
MC13020	3167-103
MC1309	3168-130
MC1310	3168-131
MC1330A1	3172-109
MC1330A2	3172-110
MC1349	3172-111
MC1350	3168-38
	3172-112
	¶ 301-8
	¶ 304-10
	¶ 304-
MC1352	3172-113
	¶ 304-10
	¶ 304-
MC1357	3171-156
	¶ 301-8
MC1358	3171-157
MC1372	3172-114
	3173-21
	¶ 260-6
	¶ 260-10
	¶ 267-16
MC1373	3172-115
	3173-22
MC1374	3171-123
	¶ 303-8
MC1376	3168-112
MC1377	3170-118
MC1391	3171-84
MC1393	3172-68
MC1394	3171-85
MC1399	3170-119
MC1400-10	★ 3534
	3237-71
MC1400-2	★ 3534
	3236-108
MC1400-5	★ 3534
	3236-147
MC1400-6	★ 3534
	3237-4
MC14000Series	★ 820
MC14000UBA	584-120
MC14000UBC	584-121
MC14001BA	585-34
MC14001BC	585-35
MC14001UBA	585-36
MC14001UBC	585-37
MC14002BA	584-142
MC14002BC	584-143
MC14002UBA	584-144
MC14002UBC	584-145
MC14006BA	591-164
	3789-106
MC14006BC	591-165
	3789-105
MC14007UBA	573-147
MC14007UBC	573-148
MC14008BA	571-36
MC14008BC	571-37
MC1400A-10	★ 3534
	3237-72
MC1400A-2	★ 3534
	3236-109
MC1400A-5	★ 3534
	3236-148
MC1400A-6	★ 3534
	3237-5
MC14011BA	583-72
MC14011BC	583-73
MC14011UBA	583-74
MC14011UBC	583-75
MC14012BA	582-173
MC14012BC	582-174
MC14012UBA	582-175
MC14012UBC	582-176
MC14013BA	580-46
	¶ 303-1
MC14013BC	580-47
	¶ 303-1
MC14014BA	591-127
	3790-67
MC14014BC	591-128
MC14015BA	590-52
	3789-79
MC14015BC	590-53
	3789-72
MC14016BA	2617-49
MC14016BC	2617-50
MC14017BA	576-18
MC14017BC	576-19
MC14018BA	577-142
MC14018BC	577-143
MC14020BA	575-128
MC14020BC	575-129
MC14021BA	591-14
	3790-68
MC14021BC	591-15
	3790-56
MC14022BA	577-113
MC14022BC	577-114
MC14023BA	583-20
MC14023BC	583-21
MC14023UBA	583-22
MC14023UBC	583-23
MC14024BA	575-51
MC14024BC	575-52
MC14025BA	584-183
MC14025BC	584-184
MC14025UBA	584-185
MC14025UBC	584-186
MC14027BA	582-13
MC14027BC	582-14
MC14028BA	578-30
MC14028BC	578-31
MC14029BA	577-161
MC14029BC	577-162
MC1403	★ 3535
	3236-110
MC14032BA	571-18
MC14032BC	571-19
MC14034BA	591-35
	3790-23
MC14034BC	591-36
	3790-15
MC14035BA	590-152
	3789-49
MC14035BC	590-153
	3789-39
MC14038BA	571-6
MC14038BC	571-7
MC1403A	★ 3535
	3236-111
MC1404-10	★ 3535
	3237-73
MC1404-5	★ 3535
	3236-149

Arranged alphanumerically from left to right.

© IC MASTER 1984

Motorola Semiconductor Products (Cont'd)

Device	Page-Line
MC1404-6	★ **3535**
	3237-6
MC14040BA	575-91
	¶ 303-1
MC14040BC	575-92
	¶ 303-1
MC14042BA	586-50
MC14042BC	586-51
MC14043BA	586-106
MC14043BC	586-107
MC14044BA	586-85
MC14044BC	586-86
MC14046BA	592-88
	3214-36
MC14046BC	592-89
	3214-37
MC14049UBA	572-90
MC14049UBC	572-91
MC1404A-10	★ **3535**
	3237-74
MC1405	2637-38
MC14050BA	572-134
MC14050BC	572-135
MC14051BA	2623-33
MC14051BC	2623-34
MC14052BA	2622-78
MC14052BC	2622-79
MC14053BA	2619-57
MC14053BC	2619-58
MC1406	★ **3069**
	2638-28
MC14060B	575-158
MC14066BA	2617-27
MC14066BC	2617-28
MC14067BA	589-10
	2624-45
MC14067BC	589-11
	2624-46
MC14068BA	583-132
MC14068BC	583-133
MC14069UBA	573-187
MC14069UBC	573-188
MC14070BA	585-118
MC14070BC	585-119
MC14071BA	584-82
MC14071BC	584-83
MC14072BA	584-32
MC14072BC	584-33
MC14073BA	582-84
MC14073BC	582-85
MC14075BA	584-49
MC14075BC	584-50
MC14076BA	580-94
MC14076BC	580-95
MC14077BA	585-172
MC14077BC	585-173
MC14078BA	585-89
MC14078BC	585-90
MC1408-6	★ **3069**
	2642-48
	¶ 280-10
	¶ 284-10
MC1408-7	★ **3069**
	2642-40
	¶ 280-10
	¶ 284-10
MC1408-8	★ **3069**
	2641-22
	¶ 280-10
	¶ 284-10
MC14081BA	582-122
MC14081BC	582-123
MC14082BA	582-67
MC14082BC	582-68
MC14093BA	593-89
MC14093BC	593-90
MC14094BA	591-51
	3790-127
MC14094BC	591-52
	3790-128
MC14097BA	589-67
	2623-113
MC14097BC	589-68
	2623-114
MC14099BA	587-49
MC14099BC	587-50
MC1411	★ **3064**
	2679-123
	★ **3064**
	3158-32
MC1412	★ **3064**
	2679-143
	★ **3064**
	3158-33
MC1413	★ **3064**
	2679-95
	★ **3064**
	3158-34
MC1414	3161-29
	¶ 300-5
MC1416	★ **3064**
	2679-77
	★ **3064**
	3158-35
MC14160BA	576-99
MC14160BC	576-100
MC14161BA	574-82
MC14161BC	574-83
MC14162BA	576-59
MC14162BC	576-60
MC14163BA	574-47
MC14163BC	574-48
MC14174BA	580-158
MC14174BC	580-159
MC14175BA	580-130
MC14175BC	580-131
MC14194BA	590-98
	3789-54
MC14194BC	590-99
MC142100	★ **3536**
	2622-58
	★ **3536**
	3216-137
MC1422	3220-1
MC1436	3176-135
	3201-8
MC1436C	3176-146
	3201-53
MC1437	3209-17
MC1438	3155-19
MC1439	3199-58
MC14400	★ **3536**
	3217-71
MC14400Series	★ **820**
MC14401	★ **3536**
	3217-72
MC14402	★ **3536**
	3217-73
MC14403	★ **3536**
	3216-74
	3217-74
MC14404	3216-101
MC14405	★ **3536**
	3216-75
	3217-75
MC14406	3216-115
MC14407	★ **3536**
	3216-102
MC14408	★ **3536**
	593-12
	★ **3536**
	3217-48
MC14409	★ **3536**
	593-13
	★ **3536**
	3217-8
MC14410	★ **3536**
	3219-80
MC14411	★ **3536**
	592-47
	★ **3536**
	2685-39
MC14412	★ **3536**
	592-80
	★ **3536**
	3218-32
MC14413-1	★ **3536**
	3217-93
MC14413-2	★ **3536**
	3217-94
MC14414-1	★ **3536**
	3217-95
MC14414-2	★ **3536**
	3217-96
MC14415	593-80
MC14415E	593-81
MC14416	★ **3536**
	3218-116
MC14417	★ **3536**
	3218-117
MC14418	★ **3536**
	3218-118
MC14419	★ **3536**
	594-182
	¶ 320-11
	★ **3536**
	2667-5
	¶ 320-11
	★ **3536**
	3217-67
	¶ 320-11
MC14433	2637-10
	¶ 261-4
	¶ 280-9
MC14435	592-62
	2637-39
MC14435E	592-63
	2637-40
MC1444	2684-72
MC14443	2628-39
MC14444	2628-37
MC14447	2628-40
MC1445	3156-43
MC14457	3169-28
MC14458	3169-29
MC14460	3166-15
MC14466	3173-89
MC14467	3173-90
MC14469	592-38
	¶ 286-15
	2685-19
	¶ 286-15
MC14490	593-118
MC14490E	593-119
MC14495	579-169
	2661-78
MC145000	2661-71
MC145001	2661-72
MC14500B	592-37
	1337-94
MC14501UBA	586-2
MC14501UBC	586-3
MC145026	3169-30
MC145027	3169-31
MC145028	3169-32
MC14502BA	572-60
MC14502BC	572-61
MC14503BA	573-40
MC14503BC	573-41
MC14504BA	592-33
MC14504BC	592-34
MC14506BA	583-197
MC14506BC	583-198
MC14508BA	586-26
MC14508BC	586-27
MC145100	★ **3536**
	2622-59
	★ **3536**
	3216-138
MC145104	3214-96
MC145106	3214-97
MC145107	3214-98
MC145109	3214-99
MC14510BA	576-139
MC14510BC	576-140
MC145112	3214-100
MC14511BA	579-175
	¶ 288-12
	2662-44
	¶ 288-12
MC14511BC	579-176
	¶ 288-12
	2662-45
	¶ 288-12
MC14512A	588-187
MC14512C	588-188
MC14513BA	579-177
	2662-46
MC14513BC	579-178
	2662-47
MC145143	3214-101
MC145144	3214-102
MC145145	3214-103
MC145146	3214-104
MC14514BA	579-24
MC14514BC	579-25
MC145151	3214-105
MC145152	3214-106
MC145155	3214-107
MC145156	3214-108
MC145157	3214-109
MC145158	3214-110
MC145159	3214-111
MC14515BA	579-26
MC14515BC	579-27
MC14516BA	574-126
MC14516BC	574-127
MC14517BA	590-81
	3791-54
MC14517BC	590-82
	3791-51
MC14518BA	577-22
MC14518BC	577-23
MC14519BA	588-156
MC14519BC	588-157
MC14520BA	575-4
MC14520BC	575-5
MC14521BA	590-41
MC14521BC	590-42
MC14522BA	576-196
MC14522BC	576-197
MC14526BA	574-182
MC14526BC	574-183
MC14527BA	593-15
MC14527BC	593-16
MC14528BA	589-95
MC14528BC	589-96
MC14529BA	2622-71
	2623-17
MC14529BC	2622-72
	2623-18
MC14530BA	585-193
MC14530BC	585-194
MC14531BA	595-28
MC14531BC	595-29
MC14532BA	595-6
MC14532BC	595-7
MC14534BA	577-107
	¶ 254-5
MC14534BC	577-108
	¶ 254-5
MC14536BA	590-5
MC14536BC	590-6
MC14538BA	589-124
MC14538BC	589-125
MC14539BA	588-54
MC14539BC	588-55
MC1454	3164-82
MC145414	★ **3536**
	3217-104
MC145415	★ **3536**
	3217-108
MC14541BA	589-177
	3220-27
MC14541BC	589-178
	3220-28
MC145420	3219-42
MC145422	★ **3536**
	2686-86
	★ **3536**
	3219-44
MC145423	2686-87
	3219-45
MC145425	3219-43
MC145426	★ **3536**
	2686-88
	★ **3536**
	3219-46
MC145428	★ **3536**
MC145429	★ **3536**
MC145431	3217-105
MC145432	★ **3536**
MC145433	★ **3536**
	3217-106
MC145434	3217-107
MC14543BA	579-131
	¶ 288-12
	2662-63
	¶ 288-12
MC14543BC	579-132
	¶ 288-12
	2662-64
	¶ 288-12
MC145440	★ **3536**
	3217-126
	3218-8
MC145441	★ **3536**
	3217-127
	3218-9
MC145445	★ **3536**
	3217-152
MC14544BA	2662-60
MC14544BC	2662-61
MC145450	★ **3536**
	3217-153
MC14547BA	578-67
	2661-84
MC14547BC	578-68
	2661-85
MC14549BA	592-135
MC14549BC	592-136
MC1455	3220-37
MC14551BA	2619-82
MC14551BC	2619-83
MC14553BA	577-68
MC14553BC	577-69
MC14554BA	571-152
MC14554BC	571-153
MC14555BA	578-78
MC14555BC	578-79
MC14556BA	578-91
MC14556BC	578-92
MC14557BA	592-17
	3791-49
MC14557BC	592-18
MC14558BA	578-70
MC14558BC	578-71
MC14559BA	592-130
	¶ 284-10
MC14559BC	592-131
	¶ 284-10
MC1455BC	3791-45
MC1456	3201-7
MC14560BA	571-2
	¶ 250-10
MC14560BC	571-3
	¶ 250-10
MC14561BA	572-7
	¶ 250-10
MC14561BC	572-8
	¶ 250-10
MC14562BA	592-23
	3791-36
MC14562BC	592-24
	3791-35
MC14566BA	577-132
MC14566BC	577-133
MC14568BA	577-137
	3214-23
MC14568BC	577-138
	3214-24
MC14569BC	578-18
MC1456C	3201-55
MC14572A	586-6
	¶ 303-1
MC14572C	586-7
	¶ 303-1
MC14573	592-54
	3213-47
MC14574	592-53
	3163-44
MC14575	592-55
	3162-16
	3162-17
MC1458	3175-3
	3208-35
MC14580BA	587-98
	3770-21
MC14580BC	587-99
	3770-22
MC14581BA	571-77
MC14581BC	571-78
MC14582BA	571-91
MC14582BC	571-92
MC14583BA	593-33
MC14583BC	593-34
MC14584BA	593-125
MC14584BC	593-126
MC14585BA	571-107
MC14585BC	571-108
MC1458705F5	1273-25
MC1458C	3209-31
MC1458N	3209-1
MC1458S	3209-2
MC14597BA	587-84
	1337-95
MC14597BC	587-85
	1337-96
MC14598BA	587-42
	1337-97
MC14598BC	587-43
	1337-98
MC14599BA	587-40
	1337-99
MC14599BC	587-41
	1337-100
MC1463G	★ **3532**
	3229-80
MC1463R	★ **3532**
	3229-83
MC1466	3229-67
MC1468	3228-10
	3230-6
	3230-8
MC146805E2	★ **1503**
	★ **1505**
	1342-46
	¶ 263-14
	¶ 268-16
	★ **1503**
	★ **1505**
	1273-26
	¶ 263-14
	¶ 268-16
MC146805F2	★ **1503**
	★ **1505**
	1342-3
	¶ 264-13
	★ **1503**
	★ **1505**
	1273-27
	¶ 264-13
MC146805G2	★ **1503**
	★ **1505**
	1342-5
	¶ 260-16
	★ **1503**
	★ **1505**
	1273-28
	¶ 260-16
MC146805H2	★ **1503**
	★ **1505**
	1273-29
MC14680G2	1342-4
MC146818	1342-134
	¶ 264-14
	¶ 266-17
MC146823	1343-45
	¶ 266-17
MC1468705F2	★ **1503**
MC1468705F5	★ **1503**
MC1468705G2	★ **1503**
	1342-2
	★ **1503**
	1273-30
MC1469	★ **3532**
	3228-85
	3228-86
MC1472	★ **3064**
	2681-145
MC1488	★ **3064**
	2668-51
	¶ 288-14
MC1489	★ **3064**
	2672-28
	¶ 288-14
MC1489A	★ **3064**
	2672-37
	¶ 288-14
MC1494	3235-37
MC1495	3235-38
MC1496	3232-76
MC1500-10	★ **3534**
	3237-75
MC1500-2	★ **3534**
	3236-112
MC1500-5	★ **3534**
	3236-150
MC1500-6	★ **3534**
	3237-7
MC1500A-10	★ **3534**
	3237-76
MC1500A-2	★ **3534**
	3236-113
MC1500A-5	★ **3534**
	3236-151
MC1500A-6	★ **3534**
	3237-8
MC1503	★ **3535**
	3236-114
MC1503A	★ **3535**
	3236-115
MC1504-10	★ **3535**
	3237-77
MC1504-5	★ **3535**
	3236-152

¶ Indicates page number in Application Note Directory.
★ Indicates additional data is provided on the page noted.

IC MASTER

Motorola Semiconductor Products (Cont'd)

Device	Page-Line
MC1504-6	★ **3535**
	3237-9
MC1504A-10	★ **3535**
	3237-78
MC1505	2637-41
MC1506	★ **3069**
	2638-29
MC1508-8	★ **3069**
	2641-23
	¶ 280-10
MC1514	3160-51
	¶ 300-5
MC1536	3176-126
	3195-39
MC1536R	3229-111
MC1537	3207-55
MC1538	3155-20
MC1539	3193-26
MC1544	2684-73
MC1545	3156-44
	¶ 297-12
MC1550	3156-89
MC1554	3164-83
	¶ 296-16
MC1555	3220-38
MC1556	3193-35
MC1558	3207-36
MC1558N	3207-54
MC1558S	3207-23
MC15636	★ **3532**
	3229-82
MC15666	3229-68
MC1568	3228-11
	3230-7
	3230-9
MC1569	★ **3532**
	3229-29
	3229-30
MC1590G	3155-36
	¶ 297-1
MC1594	3235-39
MC1595	3235-40
MC1596	3232-77
MC1648	600-52
	3214-152
MC1648M	600-53
	3214-153
MC1650	600-55
	¶ 256-12
MC1651	600-56
MC1654	600-30
MC1658	600-49
	3214-154
MC1660	600-40
	¶ 257-3
MC1662	600-39
	¶ 256-10
	¶ 257-3
MC1664	600-38
	¶ 257-3
MC1666	600-37
MC1668	600-48
MC1670	600-32
MC1672	600-46
MC1674	600-47
MC1678	600-13
MC1688	600-45
MC1690	600-36
MC1692	600-58
	¶ 256-12
MC1694	600-51
	3789-66
MC1697	600-14
MC1699	600-15
MC1709	3196-45
MC1709A	3191-47
MC1710	3159-24
MC1710C	3160-6
MC1711	3161-14
MC1711C	3161-37
MC1723	★ **3532**
	3229-9
MC1723C	★ **3532**
	3229-10
MC1733	3156-90
	¶ 285-6
MC1733C	3156-91
	¶ 285-6
MC1741	3175-29
	3196-51
MC1741C	3198-45
MC1741N	3197-1
MC1741NC	3199-4
MC1741NS	3197-16
MC1741S	3197-14
MC1741SC	3199-2
MC1747	3207-37
MC1747C	3208-36
MC1748	3197-8
MC1748C	3198-57
MC1776	3196-10
	¶ 303-1
MC1776C	3190-53
	¶ 303-1
MC2261A	2685-74
MC2261B	2685-75
MC2261C	2685-76
MC2652	★ **1511**
	2686-9
	¶ 276-5
	★ **1511**
	1351-111
	¶ 276-5
MC2652-2	★ **1511**
	2686-10
	¶ 276-5
MC2653	★ **1512**
	2666-9
	¶ 276-5
	★ **1512**
	1352-22
	¶ 276-5
MC2661	★ **1512**
	1351-113
	¶ 276-5
MC2661A	★ **1512**
	1353-51
	¶ 276-5
MC2661B	★ **1512**
	1353-52
	¶ 276-5
MC2661C	★ **1512**
	1353-53
	¶ 276-5
MC2681	2686-92
MC26S10	638-123
	2676-56
MC26S11	638-124
	2676-57
MC2801	3171-59
MC3000	621-183
MC3001	619-115
MC3002	624-116
MC3003	623-104
MC3021	625-21
MC3022	625-49
MC3025	619-166
MC3026	618-115
MC3060	615-5
MC3061	617-121
MC3062	617-122
MC3100	621-184
MC3101	619-116
MC3102	624-117
MC3121	625-22
MC3122	625-50
MC3126	618-116
MC3160	615-6
MC3161	617-123
MC3162	617-124
MC3221	3164-71
MC3232A	2680-102
MC3242A	2680-105
	¶ 320-10
MC3301	3180-89
MC3302	3163-39
MC3303	3180-77
MC33063	★ **3533**
	3230-58
MC33074	3180-82
	3211-9
MC33074A	3210-26
MC3320	3164-72
MC3321	3164-73
MC3324	3162-13
	3236-1
MC3324A	3162-8
	3236-2
MC3325	3166-23
MC3330	3155-31
MC3333	3166-9
MC3334	3166-8
MC3340	3167-59
MC3344	3233-99
MC3346	3157-6
MC3350	3157-138
MC3356	3217-109
MC3357	3168-121
MC3359	3168-103
MC3370	3239-93
MC3373	3168-176
MC3386	3157-7
MC3393	3215-73
MC3396	3214-61
MC34001	3201-1
MC34001A	3190-7
MC34001B	3195-22
MC34002A	3205-14
MC34003A	3204-12
MC34004	3213-15
MC34004B	3211-24
MC3401	3180-85
MC34010	★ **3060**
	3217-65
MC34011	★ **3060**
	3217-66
MC34012	★ **3060**
	3219-20
MC34012-1	★ **3060**
	3219-27
MC34012-2	★ **3060**
	3219-28
MC34012-3	★ **3060**
	3219-29
MC34013	★ **3060**
MC34015	3217-9
MC34017	★ **3060**
MC34019	3218-85
MC34022A	3204-13
	3205-8
MC3403	3180-78
MC34044	2679-26
MC34046S	2679-28
MC34047S	2679-29
MC3405	3156-7
	3163-38
MC34060	★ **3533**
	3230-59
MC34061	3235-163
MC34061A	3235-164
MC34062	3235-161
MC34063	★ **3533**
	3230-60
MC34074	★ **3530**
	3180-83
	3211-10
MC34074A	★ **3530**
	3210-27
MC3408	★ **3069**
	2642-43
MC3410	★ **3069**
	2644-4
MC3410C	★ **3069**
	2645-43
MC3412	★ **3067**
	2650-5
MC3416	★ **3060**
	2622-60
	¶ 290-13
MC3417	3216-156
MC3418	3216-157
MC3419	★ **3060**
	3218-86
MC3419A	★ **3060**
	3218-87
MC3419C	★ **3060**
	3218-88
MC3420	★ **3533**
	3230-61
MC3423	3235-110
MC3424	3162-14
	3236-3
MC3424A	3162-9
	3236-4
MC3425	3236-7
MC3425A	3236-8
MC3426	3173-34
MC3430	2684-59
	3162-44
MC3431	2684-60
	3162-45
MC3432	2684-61
	3162-46
MC3433	2684-62
	3162-47
MC3437	2672-61
MC3438	2675-1
MC3440A	★ **3064**
	2675-40
MC3441A	2675-41
MC3442A	1343-24
MC3443A	2675-42
MC3446A	★ **3064**
	2675-19
MC3447	★ **3064**
	★ **3066**
	2678-35
MC3448A	★ **3064**
	2675-36
MC3450	2674-16
	¶ 323-5
MC3452	2674-19
	¶ 323-5
MC3453A	2671-31
MC3456	3220-75
MC3458	3180-38
MC3459	2683-5
	¶ 323-5
MC3460	2683-6
	¶ 323-5
MC3466	2683-39
MC3467	3156-41
MC3468	3156-42
MC3469	★ **3062**
MC3470	★ **3061**
	3155-44
MC3470A	★ **3061**
	3155-45
MC3471	★ **3062**
MC3476	3190-54
MC3480	2680-99
	¶ 320-10
	1343-25
	¶ 320-10
MC3481	★ **3064**
	★ **3065**
	2668-37
MC3482	★ **3063**
	606-87
MC3482A	★ **3063**
	606-88
	★ **3063**
	1343-124
MC3482B	★ **3063**
	606-89
	★ **3063**
	1343-125
MC3484V2	2681-5
	3166-13
MC3484V4	2681-6
	3166-14
MC3485	★ **3064**
	★ **3065**
	2668-38
MC3486	★ **3064**
	2674-22
	¶ 287-1
	¶ 288-14
MC3487	★ **3064**
	2671-27
	¶ 287-1
	¶ 288-14
MC3488A	★ **3064**
	¶ 287-1
	¶ 288-14
MC3490	2663-66
MC3491	2663-124
MC3492	2663-125
MC3494	2663-67
MC35001	3200-37
MC35001A	3190-6
MC35001B	3195-16
MC35002A	3205-7
MC35002B	3206-49
MC35004	3213-16
MC35004A	3210-12
MC35004B	3211-17
MC35022	3204-36
	3205-16
MC35022A	3204-11
MC35022B	3204-49
MC3503	3180-79
MC3505	3156-8
	3163-29
MC35060	★ **3533**
	3230-62
MC35061	3235-165
MC35061A	3235-166
MC35062	3235-162
MC35063	★ **3533**
	3230-63
MC35074	3180-84
	3211-11
MC35074A	3210-28
MC3510	★ **3069**
	2644-5
MC3512	★ **3067**
	2648-9
MC3517	3216-158
MC3518	3216-159
MC3519	3218-89
MC3520	★ **3533**
	3230-64
MC3523	3235-111
MC3524	3162-12
	3236-5
MC3524A	3162-10
	3236-6
MC3525	3236-9
MC3525A	3236-10
MC3556	3220-76
MC3558	3207-22
MC3571	3212-2
MC3575	3210-9
MC3870	1341-37
	1273-31
MC4000	628-31
	2684-1
MC4000Series	★ **820**
MC4001	612-34
MC4004	626-171
	3770-65
MC4005	626-172
	3770-66
MC4006	612-21
MC4007	612-116
MC4008	639-5
MC4010	637-124
MC4012	631-86
	3789-17
MC4015	615-35
MC4016	611-143
	¶ 258-16
	¶ 310-5
MC4017	611-144
MC4018	611-137
	¶ 258-16
MC4019	611-138
MC4021	603-34
MC4022	603-35
MC4023	611-169
MC4024	631-19
	¶ 258-16
	¶ 310-5
	3215-30
	¶ 258-16
	¶ 310-5
MC4038	612-19
MC4039	2661-147
MC4040	612-33
MC4041	2666-15
MC4042	613-150
	2683-35
MC4043	2681-42
MC4044	637-73
	¶ 258-16
	¶ 310-5
	3214-56
	¶ 258-16
	¶ 310-5
MC4048	612-20
MC4050	611-166
MC4056	603-3
MC4060	636-138
MC4202	3211-47
MC4300	628-32
	2684-2
MC4300Series	★ **820**
MC4304	626-173
	3770-67
MC4305	626-174
	3770-68
MC4306	612-22
MC4307	612-117
MC4308	639-6
MC4310	637-125
MC4312	631-87
	3789-18
MC4316	611-145
	¶ 310-5
MC4317	611-146
MC4318	611-139
MC4319	611-140
MC4321	603-36
MC4322	603-37
MC4324	631-20
	¶ 258-16
	¶ 310-5
	3215-31
	¶ 258-16
	¶ 310-5
MC4344	637-74
	¶ 258-16
	¶ 310-5
	3214-57
	¶ 258-16
	¶ 310-5
MC4350	611-167
MC4355	609-122
MC4356	603-4
MC4558	3207-29
MC4558A	3207-30
MC4558C	3208-50
MC4558N	3207-31
MC4558NC	3208-51
MC4741	3211-58
MC4741C	3212-46
MC5410	620-125
MC54141	2662-89
MC54468	636-109
MC5491A	3790-117
MC54ALS174	615-158
MC54ALS55	622-168
MC54ALS569	609-70
MC54ALS653	635-152
MC54ALS654	635-159
MC54ALS878	614-120
MC54ALS879	614-121
MC54F00	★ **822**
	621-177
MC54F02	★ **822**
	624-78
MC54F04	★ **822**
	607-71
MC54F08	★ **822**
	619-110
MC54F10	★ **822**
	620-126
MC54F109	★ **822**
	617-61
MC54F11	★ **822**
	619-10
MC54F112	★ **822**
	618-49
MC54F113	★ **822**
	618-10
MC54F114	★ **822**
	618-86
MC54F138	★ **822**
	613-53
MC54F139	★ **822**
	612-132
MC54F151	★ **822**
	629-165
MC54F153	★ **822**
	628-48
MC54F157	★ **822**
	629-26
MC54F158	★ **822**
	628-135
MC54F160	★ **822**
	610-50
MC54F161	★ **822**
	608-18
MC54F162	★ **822**
	610-98
MC54F163	★ **822**
	608-63
MC54F168	★ **822**
	611-3
MC54F169	★ **822**
	609-4
MC54F174	★ **822**
	615-165
MC54F175	★ **822**
	615-54

Arranged alphanumerically from left to right.

© IC MASTER 1984

Motorola Semiconductor Products (Cont'd)

Device	Page-Line
MC54F181	★ 822
	604-37
MC54F182	★ 822
	604-92
MC54F189	★ 822
	627-73
MC54F190	★ 822
	611-87
MC54F191	★ 822
	609-53
MC54F192	★ 822
	611-51
MC54F193	★ 822
	609-99
MC54F194	★ 822
	631-166
MC54F195	★ 822
	616-168
MC54F20	★ 822
	620-60
MC54F240	★ 822
	633-158
MC54F241	★ 822
	634-32
MC54F242	★ 822
	633-92
MC54F243	★ 822
	633-93
MC54F244	★ 822
	634-85
MC54F245	★ 822
	635-96
MC54F251	★ 822
	630-44
MC54F253	★ 822
	627-173
MC54F257	★ 822
	628-169
MC54F258	★ 822
	628-96
MC54F280	★ 822
	639-85
MC54F283	★ 822
	605-87
MC54F289	★ 822
	627-52
MC54F2960	★ 822
	635-97
	★ 822
	1336-89
MC54F2961	★ 822
	1336-97
MC54F2962	★ 822
	1336-98
MC54F2968	★ 822
	1336-85
MC54F2969	★ 822
	1336-106
MC54F2970	★ 822
	1336-109
MC54F299	★ 822
	632-173
MC54F32	★ 822
	623-101
MC54F323	★ 822
	632-174
MC54F350	★ 822
	629-121
	638-137
MC54F352	★ 822
	627-147
MC54F353	★ 822
	627-113
MC54F373	★ 822
	626-62
MC54F374	★ 822
	616-119
MC54F378	★ 822
	616-3
MC54F379	★ 822
	615-98
MC54F381	★ 822
	604-38
MC54F382	★ 822
	604-39
MC54F521	★ 822
	603-96
MC54F533	★ 822
	626-122
MC54F534	★ 822
	616-50
MC54F537	★ 822
	612-112
MC54F538	★ 822
	613-86
MC54F539	★ 822
	613-6
MC54F620	★ 822
	636-76
MC54F621	636-44
MC54F623	★ 822
	636-77
MC54F64	★ 822
	623-55
MC54F640	★ 822
	635-17
MC54F643	★ 822
	635-18
MC54F645	635-98
MC54F74	★ 822
	614-174
MC54F86	★ 822
	624-173
MC54H87	638-151
MC54HC00	583-76
MC54HC02	585-38
MC54HC03	583-64
MC54HC04	573-189
MC54HC08	582-124
MC54HC10	583-24
MC54HC107	581-168
MC54HC109	582-15
MC54HC11	582-86
MC54HC112	581-154
MC54HC113	581-144
MC54HC123	589-97
MC54HC125	572-22
MC54HC126	572-23
MC54HC132	593-91
MC54HC133	583-159
MC54HC137	579-4
MC54HC138	578-153
MC54HC139	578-111
MC54HC14	593-127
MC54HC147	579-92
MC54HC151	588-165
MC54HC153	588-56
MC54HC154	579-74
MC54HC157	588-81
MC54HC158	588-104
MC54HC160	576-101
MC54HC161	574-84
MC54HC162	576-61
MC54HC163	574-49
MC54HC164	591-98
MC54HC165	591-70
MC54HC166	591-117
MC54HC173	580-96
MC54HC174	580-160
MC54HC175	580-132
MC54HC181	571-79
MC54HC182	571-93
MC54HC190	577-11
MC54HC191	574-128
MC54HC192	576-141
MC54HC193	574-129
MC54HC194	590-100
MC54HC195	590-129
MC54HC20	582-177
MC54HC221	589-126
MC54HC237	579-5
MC54HC240	594-11
	¶ 268-3
MC54HC241	594-49
	¶ 268-3
MC54HC242	593-54
	¶ 268-3
MC54HC243	593-55
	¶ 268-3
MC54HC244	593-165
	¶ 268-3
MC54HC245	594-139
	¶ 268-3
MC54HC251	589-30
MC54HC253	588-65
MC54HC257	588-125
MC54HC259	587-51
MC54HC266	585-174
MC54HC27	584-187
MC54HC273	580-191
MC54HC280	571-181
MC54HC283	571-38
MC54HC292	592-117
MC54HC294	592-118
MC54HC298	588-149
MC54HC299	591-149
MC54HC30	583-134
MC54HC32	584-84
MC54HC354	589-31
MC54HC356	589-32
MC54HC365	573-42
MC54HC366	573-1
MC54HC367	573-43
MC54HC368	573-2
MC54HC373	586-137
MC54HC374	581-80
MC54HC390	577-24
MC54HC393	575-6
MC54HC4002	584-146
MC54HC4016	2617-60
MC54HC4017	576-20
MC54HC4020	575-130
MC54HC4024	575-53
MC54HC4040	575-93
MC54HC4046	592-90
MC54HC4049	572-92
MC54HC4050	572-136
MC54HC4051	2623-35
MC54HC4052	2622-80
MC54HC4053	2619-59
MC54HC4060	575-159
MC54HC4066	2617-29
MC54HC4075	584-51
MC54HC4078	585-91
MC54HC42	578-32
MC54HC423	589-127
MC54HC4316	2617-61
MC54HC4335	2619-60
MC54HC4351	2623-36
MC54HC4352	2622-81
MC54HC4511	579-179
MC54HC4514	579-28
MC54HC4538	589-128
MC54HC4543	579-133
MC54HC51	584-12
MC54HC533	586-193
MC54HC534	581-31
MC54HC540	573-103
MC54HC541	573-104
MC54HC563	586-194
MC54HC564	581-32
MC54HC573	586-138
MC54HC574	581-81
MC54HC58	583-190
MC54HC589	591-129
MC54HC595	591-120
MC54HC597	591-92
MC54HC640	594-108
MC54HC643	594-109
MC54HC646	594-90
MC54HC648	594-76
MC54HC688	571-141
MC54HC73	581-169
MC54HC74	580-48
MC54HC75	586-52
MC54HC76	582-16
MC54HC85	571-109
MC54HC86	585-120
MC54HCSeries	★ 824
MC54HCT00	583-77
MC54HCT04	573-190
MC54HCT05	573-191
MC54HCT138	578-154
MC54HCT240	594-12
MC54HCT241	594-50
MC54HCT244	593-166
MC54HCT245	594-140
MC54HCT34	573-192
MC54HCT373	586-139
MC54HCT374	581-82
MC54HCT533	586-195
MC54HCT534	581-33
MC54HCT540	573-105
MC54HCT541	573-106
MC54HCT640	594-112
MC54HCT643	594-113
MC54HCT688	571-63
MC54HCU04	573-168
MC55107	2673-24
MC55108	2673-31
MC55325	2680-71
MC5805K3	1273-32
MC6170	3218-10
MC6172	★ 3536
	3217-60
	¶ 298-5
MC6173	★ 3536
	3218-34
	¶ 298-5
MC6190	3170-29
	3172-69
MC6191	3170-30
	3172-70
MC6192	3170-31
	3172-71
MC6193	3170-32
	3172-72
MC6194	3170-33
	3172-73
MC6195	3170-34
	3214-112
MC6196	3170-35
	3214-113
MC6482	606-90
MC6482A	606-91
MC6482B	606-92
MC660	601-75
MC660Series	★ 820
MC661	601-76
MC662	601-43
MC663	601-63
MC664	601-64
MC665	602-33
MC666	602-34
MC667	602-12
MC668	601-96
MC669	602-4
MC670	601-87
MC671	601-88
MC672	601-97
MC673	601-115
	¶ 307-12
MC674	601-116
MC675	602-41
MC676	601-34
	2663-129
MC677	601-8
MC678	601-4
	601-17
MC680	601-12
MC6800	★ 1505
	★ 2045
	1342-97
	¶ 261-4
	¶ 266-17
	¶ 269-13
	¶ 272-3
	¶ 272-10
	¶ 276-7
	★ 1505
	★ 2045
	1273-33
	¶ 261-4
	¶ 266-17
	¶ 269-13
	¶ 272-3
	¶ 272-10
	¶ 276-7
MC68000-10	★ 1506
	★ 1506
	★ 1508
	★ 2040
	1351-97
	¶ 261-16
	¶ 263-12
	¶ 266-4
	¶ 266-5
	¶ 266-8
	¶ 266-9
	¶ 267-1
	¶ 267-5
	¶ 267-10
	¶ 267-13
	¶ 267-15
	¶ 276-5
	¶ 277-5
	¶ 322-16
MC68000-12	★ 1506
	★ 1506
	★ 1508
	★ 2040
	1351-98
	¶ 261-16
	¶ 263-12
	¶ 266-4
	¶ 266-5
	¶ 266-8
	¶ 266-9
	¶ 267-1
	¶ 267-5
	¶ 267-10
	¶ 267-13
	¶ 267-15
	¶ 276-5
	¶ 277-5
	¶ 322-16
MC68000-4	★ 1506
	★ 1506
	★ 1508
	★ 2040
	1351-99
	¶ 261-16
	¶ 263-12
	¶ 266-4
	¶ 266-5
	¶ 266-8
	¶ 266-9
	¶ 267-1
	¶ 267-5
	¶ 267-10
	¶ 267-13
	¶ 267-15
	¶ 276-5
	¶ 277-5
	¶ 322-16
MC68000-6	★ 1506
	★ 1506
	★ 1508
	★ 2040
	1351-100
	¶ 261-16
	¶ 263-12
	¶ 266-4
	¶ 266-5
	¶ 266-8
	¶ 266-9
	¶ 267-1
	¶ 267-5
	¶ 267-10
	¶ 267-13
	¶ 267-15
	¶ 276-5
	¶ 277-5
	¶ 322-16
MC68000-8	★ 1506
	★ 1506
	★ 1508
	★ 2040
	1351-101
	¶ 261-16
	¶ 263-12
	¶ 266-4
	¶ 266-5
	¶ 266-8
	¶ 266-9
	¶ 267-1
	¶ 267-5
	¶ 267-10
	¶ 267-13
	¶ 267-15
	¶ 276-5
	¶ 277-5
	¶ 322-16
MC68000L10	★ 1507
	1287-37
MC68000L12	★ 1507
	1287-38
MC68000L4	1289-1
MC68000L6	★ 1507
	1289-2
MC68000L8	★ 1507
	1289-3
MC68008	★ 1506
	★ 1508
	1351-84
	★ 1506
	★ 1508
	1275-1
MC6801	★ 1501
	★ 1505
	1342-33
	¶ 260-6
	¶ 263-1
	¶ 266-3
	★ 1501
	★ 1505
	1275-2
	¶ 260-6
	¶ 263-1
	¶ 266-3
MC6801-1	★ 1501
	★ 1505
	1342-34
	¶ 260-6
	¶ 263-1
	¶ 266-3
	★ 1501
	★ 1505
	1275-3
	¶ 260-6
	¶ 263-1
	¶ 266-3
MC68010	★ 1506
	★ 1508
	1351-86
	★ 1506
	★ 1508
	1289-4
MC6801C	★ 1501
	★ 1505
	1342-35
	¶ 260-6
	¶ 263-1
	¶ 266-3
MC6801U4	★ 1501
	1342-36
	★ 1501
	1275-4
MC6801U4-1	★ 1501
	1275-5
MC6802	★ 1505
	★ 2045
	1342-64
	¶ 269-14
	★ 1505
	★ 2045
	1275-6
	¶ 269-14
MC68020	★ 1506
	★ 1508
	1352-73
	★ 1506
	★ 1508
	1289-10
MC6803	★ 1501
	1342-22
	¶ 266-3
	★ 1501
	1275-7
	¶ 266-3
MC6803-1	★ 1501
	1342-23
	¶ 266-3
MC6803C	★ 1501
	1342-24
	¶ 266-3
MC6803E	★ 1501
	1275-8
	¶ 266-3
MC6803U4	★ 1501
	1342-37
	★ 1501
	1275-9
MC6803U4-1	★ 1501
	1275-10
MC6804J2	★ 1504
	1275-11
MC6804P2	★ 1504
	1275-12
MC6805K3	★ 1502
	★ 1505
MC6805P2	★ 1502
	★ 1505
	1342-38
	★ 1502
	★ 1505
	1275-13
MC6805P3	★ 1502

¶ Indicates page number in Application Note Directory.
★ Indicates additional data is provided on the page noted.

IC MASTER

Motorola Semiconductor Products (Cont'd)

Device	Page-Line
MC6805P4	★ 1502
	★ 1505
	1342-39
	★ 1502
	★ 1505
	1275-14
MC6805P6	★ 1505
	1342-40
	★ 1505
	1275-15
MC6805R2	★ 1502
	★ 1505
	1342-27
	★ 1502
	★ 1505
	1275-16
MC6805R3	★ 1502
	1275-17
MC6805S2	★ 1505
	1275-18
MC6805T2	★ 1505
	1342-1
	★ 1505
	1275-19
MC6805U2	★ 1505
	1342-41
	★ 1505
	1275-20
MC6805U3	★ 1505
	1275-21
MC6808	★ 1505
	1342-84
	★ 1505
	1275-22
MC6809	★ 1505
	★ 2045
	1342-77
	¶ 260-10
	¶ 265-10
	¶ 265-12
	¶ 266-2
	¶ 266-12
	¶ 266-17
	¶ 274-8
	★ 1505
	★ 2045
	1275-23
	¶ 260-10
	¶ 265-10
	¶ 265-12
	¶ 266-2
	¶ 266-12
	¶ 266-17
	¶ 274-8
MC6809E	★ 1505
	★ 2045
	1342-53
	¶ 260-10
	¶ 262-7
	¶ 265-10
	¶ 265-10
	¶ 265-12
	¶ 265-12
	¶ 266-2
	¶ 266-12
	¶ 266-17
	¶ 274-8
	¶ 274-14
	★ 1505
	★ 2045
	1275-24
	¶ 260-10
	¶ 262-7
	¶ 265-10
	¶ 265-10
	¶ 265-12
	¶ 265-12
	¶ 266-2
	¶ 266-12
	¶ 266-17
	¶ 274-8
	¶ 274-14
MC681	601-5
MC68120	★ 1501
	★ 1505
	★ 1509
	★ 1506
	1352-5
	¶ 262-7
	¶ 274-14
	★ 1501
	★ 1505
	★ 1509
	★ 1506
	1275-25
	¶ 262-7
	¶ 274-14
MC68121	★ 1501
	★ 1509
	1352-6
	¶ 261-12
	★ 1501
	★ 1509
	1275-26
	¶ 261-12
MC68122	1342-139
	1351-109
MC68122-1	1342-140
	1351-110
MC68153	1351-108
	1355-6
MC682	602-9
MC6821	★ 1505
	1343-46
	1355-28
	¶ 266-8
	¶ 274-4
MC6822	★ 1505
	1343-23
MC68230L10	★ 1506
	★ 1509
	1352-19
MC68230L8	★ 1506
	★ 1509
	1352-20
MC6828	★ 1505
	1343-60
	1355-41
MC6829	★ 1505
	1343-27
	¶ 274-8
MC683	602-1
MC6835	★ 1505
	1342-148
MC6839	★ 1505
	1343-6
MC684	601-28
MC6840	★ 1505
	1343-72
MC6840M	★ 1505
	1343-73
MC6843	★ 1505
	1343-11
MC6844	★ 1505
	1342-166
	¶ 261-12
	¶ 266-2
	¶ 266-12
	¶ 267-5
MC68440	★ 1506
	★ 1510
	1351-124
	1354-86
MC6844M	★ 1505
	1342-167
	¶ 261-12
	¶ 266-2
	¶ 266-12
	¶ 267-5
MC6845	★ 1505
	1342-149
	¶ 263-12
	¶ 277-5
MC68450	★ 1506
	★ 1510
	1351-122
MC68451	★ 1506
	★ 1510
	1352-9
MC68452	★ 1506
	★ 1511
	1351-107
	1352-87
MC68454	★ 1506
	1351-118
MC6845M	★ 1505
	1342-150
	¶ 263-12
	¶ 277-5
MC6846	★ 1505
	1343-84
	¶ 267-1
	¶ 269-14
MC6846M	★ 1505
	1343-85
	¶ 267-1
	¶ 269-14
MC6847	★ 1505
	3173-20
	¶ 260-6
	¶ 260-10
	¶ 267-16
	★ 1505
	1343-116
	1352-26
	1353-17
	¶ 260-6
	¶ 260-10
	¶ 267-16
MC68478	1343-117
MC6847Y	★ 1505
	1352-27
	¶ 260-6
	¶ 260-10
	¶ 267-16
MC68488	★ 1505
	1343-15
	¶ 266-2
MC68488M	★ 1505
	1343-16
	¶ 266-2
MC685	601-19
MC6850	★ 1505
	2685-5
	¶ 266-4
	¶ 286-2
	★ 1505
	1342-121
	1354-121
	¶ 266-4
	¶ 286-2
MC6850M	★ 1505
	1342-122
	¶ 266-4
	¶ 286-2
MC6852	★ 1505
	2686-37
	¶ 267-13
	★ 1505
	1343-108
	1355-50
	¶ 267-13
MC6852M	★ 1505
	1343-109
	¶ 267-13
MC6854	★ 1505
	1342-110
MC6855	1343-3
MC68561	1354-21
MC68562	★ 1506
	★ 1511
	1351-116
MC68564	★ 1506
	★ 1511
	1352-25
MC6859	★ 1505
	640-65
	★ 1505
	1342-159
MC686	602-17
	3789-67
MC6860	★ 1505
	★ 3536
	2685-68
	¶ 286-10
	¶ 286-11
	★ 1505
	★ 3536
	3218-20
	¶ 286-10
	¶ 286-11
	★ 1505
	★ 3536
	1343-29
	¶ 286-10
	¶ 286-11
MC68601	1352-29
MC6860L	★ 1505
	★ 3536
	1343-30
	¶ 286-10
	¶ 286-11
MC6862	★ 1505
	3218-19
	★ 1505
	1342-160
MC68652	★ 1506
	★ 1511
	2686-11
	¶ 271-7
	¶ 276-5
	★ 1506
	★ 1511
	1351-112
	¶ 271-7
	¶ 276-5
MC68652-2	★ 1506
	★ 1511
	2686-12
	¶ 271-7
	¶ 276-5
MC68653	★ 1506
	★ 1512
	2666-10
	¶ 276-5
	★ 1506
	★ 1512
	1352-23
	¶ 276-5
MC68661	★ 1506
	★ 1512
	1351-114
	¶ 271-7
	¶ 276-5
MC68661A	★ 1506
	★ 1512
	2685-77
	¶ 271-7
	¶ 276-5
	★ 1506
	★ 1512
	1353-54
	¶ 271-7
	¶ 276-5
MC68661B	★ 1506
	★ 1512
	2685-79
	¶ 271-7
	¶ 276-5
	★ 1506
	★ 1512
	1353-55
	¶ 271-7
	¶ 276-5
MC68661C	★ 1506
	★ 1512
	2685-78
	¶ 271-7
	¶ 276-5
	★ 1506
	★ 1512
	1353-56
	¶ 271-7
	¶ 276-5
MC68681	★ 1506
	★ 1512
	2686-93
	★ 1506
	★ 1512
	1351-115
	1342-137
MC6870	
MC68701	★ 1501
	1342-10
	¶ 266-3
	¶ 269-12
MC68701-1	★ 1501
	1342-11
	¶ 266-3
	¶ 269-12
	★ 1501
	1275-27
	¶ 266-3
	¶ 269-12
MC68701C	★ 1501
	1342-12
	¶ 266-3
	¶ 269-12
MC68701C-1	★ 1501
	1342-13
	¶ 266-3
	¶ 269-12
MC68701U4	★ 1501
	1275-28
MC68701U5	★ 1501
	1275-29
MC68704P2	★ 1504
	1275-30
MC68705P3	★ 1502
	1342-14
	¶ 269-15
	★ 1502
	1275-31
	¶ 269-15
MC68705P5	1275-32
MC68705R3	1342-9
	1342-15
	1275-33
MC68705R5	★ 1502
MC68705RS	1275-34
MC68705U3	★ 1502
	1342-16
	¶ 269-15
	★ 1502
	1275-35
	¶ 269-15
MC68705U5	★ 1502
	1275-36
MC6871	1342-138
MC6875	1342-132
	¶ 272-3
	¶ 274-3
MC6875A	1342-133
	¶ 272-3
	¶ 274-3
MC688	601-58
	¶ 307-12
MC6880	2676-3
MC6880A	1342-129
MC6881	638-1
	1343-118
MC6882A	★ 3063
	1343-126
MC6882B	★ 3063
	1343-127
MC6883	627-103
	1343-97
MC6885	1343-120
MC6886	1343-121
MC6887	1343-122
MC6888	1343-123
MC68881	★ 1506
	★ 1509
	1352-4
MC6889	638-102
	2676-15
	1342-130
MC689	601-6
MC6890	★ 3068
	2641-1
	¶ 267-7
	★ 3068
	1342-157
	¶ 267-7
MC68901	★ 1506
	★ 1512
	1352-12
MC6890A	★ 3068
	2640-27
	¶ 267-7
	★ 3068
	1342-158
	¶ 267-7
MC68A00	1342-98
MC68A01	★ 1501
	1342-42
	★ 1501
	1275-37
MC68A02	1342-65
MC68A03	★ 1501
	1342-25
	★ 1501
	1275-38
MC68A08	1342-85
MC68A09	1342-78
MC68A09E	1342-54
MC68A21	1343-47
	1355-29
MC68A35	1342-151
MC68A39	1343-7
MC68A40	1343-74
MC68A44	1343-1
MC68A45	1342-152
MC68A46	1343-86
MC68A488	1343-17
MC68A50	1342-123
	1354-122
MC68A52	1343-110
MC68A54	1342-111
MC68B00	1342-99
MC68B01	★ 1501
	1342-43
	★ 1501
	1277-1
MC68B02	1342-66
MC68B03	★ 1501
	1342-26
	★ 1501
	1277-2
MC68B08	1342-86
MC68B09	1342-79
	¶ 276-16
MC68B09E	1342-55
	¶ 276-16
	¶ 276-16
MC68B21	1343-48
	1355-30
MC68B29	1343-28
MC68B35	1342-153
MC68B39	1343-8
MC68B40	1343-75
MC68B44	1343-2
MC68B45	1342-154
MC68B46	1343-87
MC68B488	1343-18
MC68B50	1342-124
	1354-123
MC68B52	1343-111
MC68B54	1342-112
MC68HC04	★ 1504
MC68HC04P2	★ 1504
MC68HC04P3	★ 1504
MC68HC05	★ 1503
MC68HC05C4	★ 1503
MC68HC11	★ 1501
MC68HC704	★ 1504
MC68HC704P3	★ 1504
MC68MM17	★ 2045
MC690	601-13
MC691	602-37
MC693	601-93
	2683-52
MC696	602-29
MC697	601-14
MC699	601-42
MC7241	624-157
MC7242	625-25
MC7250	612-23
MC7260	604-13
MC7261	603-156
MC7266	628-78
MC7267	629-55
MC7270	631-112
	3788-55
MC7271	631-120
	3788-56
MC7280	609-175
MC7281	607-127
MC7400	621-154
MC7401	621-83
MC7402	624-47
MC7403	621-84
MC7404	607-45
MC7405	606-122
MC7406	614-73
MC7407	614-50
MC7408	619-84
MC7409	619-47
MC7410	620-127
MC74100	625-70
MC74107	617-105
MC74120	637-105
MC74121	630-100
MC74122	630-124
MC74123	630-163
MC7413	637-131
MC74132	638-20
MC74136	624-130
MC7414	638-55
MC74141	2662-90
MC74145	612-52
MC74150	630-79

Arranged alphanumerically from left to right.

© IC MASTER 1984

Motorola Semiconductor Products (Cont'd)

Device	Page-Line
MC74151	629-150
MC74152	630-6
MC74153	628-33
MC74154	613-111
MC74155	613-15
MC74156	612-166
MC74157	629-3
MC7416	614-61
MC74160	610-26
MC74161	607-186
MC74162	610-75
MC74163A	608-46
MC74165	632-79
	3790-29
MC74167	637-80
MC7417	614-40
MC74174	615-151
MC74175	615-41
MC74176	609-176
MC74177	607-128
MC74180	639-70
MC74181	604-21
MC74182	604-77
MC74190	611-74
MC74191	609-33
MC74192	611-36
MC74193	609-84
MC74194	631-153
	3788-76
MC74195	631-46
	3788-116
MC74196	609-177
MC74197	607-129
MC7420	620-41
MC7423	623-147
MC7425	623-137
MC7426	613-166
MC7427	623-176
MC74290	609-131
MC74293	608-109
MC74298	629-63
MC7430	622-24
MC7437	621-40
MC7438	620-184
MC7440	619-151
MC74408	639-7
MC7442	612-75
MC7443	612-15
MC7444	612-8
MC7445	612-42
MC74452	610-153
MC74453	608-81
MC74454	611-105
MC74455	609-123
MC74456	603-5
MC7446	2662-25
MC74460	636-139
MC74468	636-110
	2684-48
MC7447	2661-164
MC7448	2661-120
MC7449	2661-93
MC7450	622-100
MC7451	622-119
MC7453	623-34
MC7454	623-23
MC7460	622-161
MC7470	616-186
MC7472	617-10
MC7473	617-106
MC7474	614-156
MC7475	625-86
MC7476	617-160
MC7477	625-116
MC7480	603-161
MC7482	604-8
MC7483	605-76
MC7485	603-51
MC7486	624-158
MC7490	609-132
MC7491	632-140
MC7491A	3790-118
MC7492	611-115
MC7493	608-110
MC7494	631-144
	3789-61
MC7495A	631-88
	3789-16
MC7496	632-3
	3789-85
MC7497	638-158
MC74ALS174	615-159
MC74ALS55	622-169
MC74ALS569	609-71
MC74ALS653	635-153
MC74ALS654	635-160
MC74ALS878	614-122
MC74ALS879	614-123
MC74F00	★ **822**
	621-178
MC74F02	★ **822**
	624-79
MC74F04	★ **822**
	607-72
MC74F08	★ **822**
	619-111
MC74F10	★ **822**
	620-146
MC74F109	★ **822**
	617-62
MC74F11	★ **822**
	619-11
MC74F112	★ **822**
	618-50
MC74F113	★ **822**
	618-11
MC74F114	★ **822**
	618-87
MC74F138	★ **822**
	613-54
MC74F139	★ **822**
	612-133
MC74F151	★ **822**
	629-166
MC74F153	★ **822**
	628-49
MC74F157	★ **822**
	629-27
MC74F158	★ **822**
	628-136
MC74F160	★ **822**
	610-51
MC74F161	★ **822**
	608-19
MC74F162	★ **822**
	610-99
MC74F163	★ **822**
	608-64
MC74F168	★ **822**
	611-4
MC74F169	★ **822**
	609-5
MC74F174	★ **822**
	615-166
MC74F175	★ **822**
	615-55
MC74F181	★ **822**
	604-40
MC74F182	★ **822**
	604-93
MC74F189	★ **822**
	627-74
MC74F190	★ **822**
	611-88
MC74F191	★ **822**
	609-54
MC74F192	★ **822**
	611-52
MC74F193	★ **822**
	609-100
MC74F194	★ **822**
	631-167
MC74F195	★ **822**
	616-169
MC74F20	★ **822**
	620-61
MC74F240	★ **822**
	633-159
MC74F241	★ **822**
	634-33
MC74F242	★ **822**
	633-94
MC74F243	★ **822**
	633-95
MC74F244	★ **822**
	634-86
MC74F245	★ **822**
	635-99
MC74F251	★ **822**
	630-45
MC74F253	★ **822**
	628-1
MC74F257	★ **822**
	628-170
MC74F258	★ **822**
	628-97
MC74F280	★ **822**
	639-86
MC74F283	★ **822**
	605-88
MC74F289	★ **822**
	627-53
MC74F2960	★ **822**
	635-100
	★ **822**
	2665-33
	★ **822**
	1336-90
	1352-3
MC74F2961	★ **822**
	1336-99
MC74F2962	★ **822**
	1336-100
MC74F2968	★ **822**
	2680-98
	★ **822**
	1336-86
MC74F2969	★ **822**
	2680-88
	★ **822**
	1336-107
MC74F2970	★ **822**
	2680-90
	★ **822**
	1336-110
MC74F299	★ **822**
	632-175
MC74F32	★ **822**
	623-102
MC74F323	★ **822**
	632-176
MC74F350	★ **822**
	629-122
	638-138
MC74F352	★ **822**
	627-148
MC74F353	★ **822**
	627-114
MC74F373	★ **822**
	626-63
MC74F374	★ **822**
	616-120
MC74F378	★ **822**
	616-4
MC74F379	★ **822**
	615-99
MC74F381	★ **822**
	604-41
MC74F382	★ **822**
	604-42
MC74F521	★ **822**
	603-97
MC74F533	★ **822**
	626-123
MC74F534	★ **822**
	616-51
MC74F537	★ **822**
	612-113
MC74F538	★ **822**
	613-87
MC74F539	★ **822**
	613-7
MC74F620	★ **822**
	636-78
MC74F621	636-45
MC74F623	★ **822**
	636-79
MC74F64	★ **822**
	623-56
MC74F640	★ **822**
	635-19
MC74F643	★ **822**
	635-20
MC74F645	635-101
MC74F74	★ **822**
	615-1
MC74F86	★ **822**
	624-174
MC74H87	638-152
MC74HC00	583-78
MC74HC02	585-39
MC74HC03	583-65
MC74HC04	573-193
MC74HC08	582-125
MC74HC10	583-25
MC74HC107	581-170
MC74HC109	582-17
MC74HC11	582-87
MC74HC112	581-155
MC74HC113	581-145
MC74HC123	589-98
MC74HC125	572-24
MC74HC126	572-25
MC74HC132	593-92
MC74HC133	583-160
MC74HC137	579-6
MC74HC138	578-155
MC74HC139	578-112
MC74HC14	593-128
MC74HC147	579-93
MC74HC151	588-166
MC74HC153	588-57
MC74HC154	579-75
MC74HC157	588-82
MC74HC158	588-105
MC74HC160	576-102
MC74HC161	574-85
MC74HC162	576-62
MC74HC163	574-50
MC74HC164	591-99
MC74HC165	591-71
MC74HC166	591-118
MC74HC173	580-97
MC74HC174	580-161
MC74HC175	580-133
MC74HC181	571-80
MC74HC182	571-94
MC74HC190	577-12
MC74HC191	574-130
MC74HC192	576-142
MC74HC193	574-131
MC74HC194	590-101
MC74HC195	590-130
MC74HC20	582-178
MC74HC221	589-129
MC74HC237	579-7
MC74HC240	594-13
MC74HC241	594-51
MC74HC242	593-56
MC74HC243	593-57
MC74HC244	593-167
MC74HC245	594-141
MC74HC251	589-33
MC74HC253	588-66
MC74HC257	588-126
MC74HC259	587-52
MC74HC266	585-175
MC74HC27	584-188
MC74HC273	581-1
MC74HC280	571-182
MC74HC283	571-39
MC74HC292	592-119
MC74HC294	592-120
MC74HC298	588-150
MC74HC299	591-150
MC74HC30	583-135
MC74HC32	584-85
MC74HC354	589-34
MC74HC356	589-35
MC74HC365	573-44
MC74HC366	573-3
MC74HC367	573-45
MC74HC368	573-4
MC74HC373	586-140
MC74HC374	581-83
MC74HC390	577-25
MC74HC393	575-7
MC74HC4002	584-147
MC74HC4016	2617-62
MC74HC4017	576-21
MC74HC4020	575-131
MC74HC4024	575-54
MC74HC4040	575-94
MC74HC4046	592-91
MC74HC4049	572-93
MC74HC4050	572-137
MC74HC4051	2623-37
MC74HC4052	2622-82
MC74HC4053	2619-61
MC74HC4060	575-160
MC74HC4066	2617-30
MC74HC4075	584-52
MC74HC4078	585-92
MC74HC42	578-33
MC74HC423	589-130
MC74HC4316	2617-63
MC74HC4351	2623-38
MC74HC4352	2622-83
MC74HC4353	2619-62
MC74HC4511	579-180
MC74HC4514	579-29
MC74HC4538	589-131
MC74HC4543	579-134
MC74HC51	584-13
MC74HC533	586-196
MC74HC534	581-34
MC74HC540	573-107
MC74HC541	573-108
MC74HC563	586-197
MC74HC564	581-35
MC74HC573	586-141
MC74HC574	581-84
MC74HC58	583-191
MC74HC589	591-130
MC74HC595	591-121
MC74HC597	591-93
MC74HC640	594-110
MC74HC643	594-111
MC74HC646	594-91
MC74HC648	594-77
MC74HC688	571-142
MC74HC73	581-171
MC74HC74	580-49
MC74HC75	586-53
MC74HC76	582-18
MC74HC77	586-41
MC74HC85	571-110
MC74HC86	585-121
MC74HCSeries	★ **824**
MC74HCT00	583-79
MC74HCT04	573-194
MC74HCT05	573-195
MC74HCT138	578-156
MC74HCT240	594-14
MC74HCT241	594-52
MC74HCT244	593-168
MC74HCT245	594-142
MC74HCT34	573-196
MC74HCT373	586-142
MC74HCT374	581-85
MC74HCT533	586-198
MC74HCT534	581-36
MC74HCT540	573-109
MC74HCT541	573-110
MC74HCT640	594-114
MC74HCT643	594-115
MC74HCT688	571-64
MC74HCU04	573-169
MC75107	2673-25
	¶ 285-6
	¶ 288-14
MC75108	2673-32
MC75109	2671-6
MC75110	2671-12
	¶ 288-14
MC75125	★ **3064**
	2673-1
MC75127	2673-2
MC75128	2673-7
MC75129	2673-8
MC75325	2680-72
MC75358	598-100
	2681-34
MC75453	2682-27
MC75491	2663-13
MC75492	2663-50
MC75S110	2671-13
MC7705C	3221-40
MC7805	★ **3531**
	3221-87
MC7805A	★ **3531**
	3221-88
MC7805AC	★ **3531**
	3221-89
MC7805C	★ **3531**
	3221-90
MC7806	★ **3531**
	3222-52
MC7806A	★ **3531**
	3222-53
MC7806AC	★ **3531**
	3222-54
MC7806C	★ **3531**
	3222-55
MC7808	★ **3531**
	3222-119
MC7808A	★ **3531**
	3222-120
MC7808AC	★ **3531**
	3222-121
MC7808C	★ **3531**
	3222-122
MC7812	★ **3531**
	3223-92
MC7812A	★ **3531**
	3223-93
MC7812AC	★ **3531**
	3223-94
MC7812C	★ **3531**
	3223-95
MC7815	★ **3531**
	3224-65
MC7815A	★ **3531**
	3224-66
MC7815AC	★ **3531**
	3224-67
MC7815C	★ **3531**
	3224-68
MC7818	★ **3532**
	3225-9
MC7818A	★ **3532**
	3225-10
MC7818AC	★ **3532**
	3225-11
MC7818C	★ **3532**
	3225-12
MC7820	★ **3532**
MC7824	★ **3532**
	3225-95
MC7824A	★ **3532**
	3225-96
MC7824AC	★ **3532**
	3225-97
MC7824C	★ **3532**
	3225-98
MC78L00	★ **3531**
MC78L02C	3221-2
MC78L05AC	3221-8
MC78L05C	3221-9
MC78L08AC	3222-90
MC78L08C	3222-91
MC78L12AC	3223-46
MC78L12C	3223-47
MC78L15AC	3224-20
MC78L15C	3224-21
MC78L18AC	3224-113
MC78L18C	3224-114
MC78L24AC	3225-63
MC78L24C	3225-64
MC78M00	★ **3531**
MC78M05C	3221-41
MC78M06C	3222-34
MC78M08C	3222-102
MC78M12C	3223-61
MC78M15C	3224-35
MC78M18C	3224-118
MC78M20C	3225-38
MC78M24C	3225-71
MC78T00	★ **3531**
MC78T05	3221-135
MC78T05A	3221-136
MC78T05AC	3222-1
MC78T05C	3222-2
MC78T06	3222-73
MC78T06C	3222-74
MC78T08	3223-2
MC78T08C	3223-3
MC78T12	3223-129
MC78T12A	3223-130
MC78T12AC	3223-131
MC78T12C	3223-132
MC78T15	3224-96
MC78T15A	3224-97
MC78T15AC	3224-98
MC78T15C	3224-99
MC78T18	3225-25
MC78T18C	3225-26
MC78T24	3225-113
MC78T24C	3225-114
MC7902C	3226-1
MC7905	★ **3531**
	3226-64
MC79052C	3226-53
MC7905C	★ **3531**
	3226-34
MC7906C	★ **3531**
	3226-80

¶ Indicates page number in Application Note Directory.
★ Indicates additional data is provided on the page noted.

IC MASTER

Motorola Semiconductor Products (Cont'd)

Device	Page-Line
MC7908C	★ 3531
	3226-94
MC7912AC	★ 3531
	3227-5
MC7912C	★ 3531
	3227-6
MC7915AC	★ 3531
	3227-56
MC7915C	★ 3531
	3227-57
MC7918C	★ 3532
	3227-84
MC7924C	★ 3532
	3227-118
MC79L00	★ 3531
MC79L03AC	3226-5
MC79L03C	3226-6
MC79L05AC	3226-7
MC79L05C	3226-8
MC79L12AC	3226-110
MC79L12C	3226-111
MC79L15A	3227-44
MC79L15AC	3227-25
MC79L15C	3227-26
MC79L18AC	3227-85
MC79L18C	3227-79
MC79L24AC	3227-112
MC79L24C	3227-113
MC79M00	★ 3531
MC8241	624-159
MC8242	625-26
MC8250	612-24
MC8260	604-14
MC8261	603-157
MC8266	628-79
MC8267	629-56
MC8270	631-113
	3788-57
MC8271	631-121
	3788-58
MC8281	607-130
MC82S100C	4482-63
MC82S100M	4482-67
MC82S101C	4482-61
MC82S101M	4482-65
MC8300	631-47
	3788-50
MC8301	612-76
MC8304	603-168
MC8307	2661-121
MC8308	625-63
MC8309	627-131
MC830Series	★ 820
MC8310	610-27
MC8311	613-112
MC8312	629-127
MC8314	625-127
MC8316	607-187
MC8318	639-30
MC8322	629-4
MC8324	603-52
MC8328	633-21
	3791-7
MC8500	2665-2
MC8501	2666-3
MC8502	2666-6
MC8503	2666-11
MC8504	638-155
	2666-14
MC8505	2680-96
MC8506	637-75
	2666-8
MC8507	1343-61
	1355-42
MC8520	2665-15
MC854	2685-7
MC8601	630-109
MC8602	631-7
MC8T13	2668-6
MC8T14	2672-18
MC8T23	2668-1
MC8T24	2672-13
MC8T26A	638-90
	2676-4
	1341-9
MC8T28	638-103
	2676-16
	1341-10
MC8T95	606-82
	1341-13
MC8T96	607-35
	1341-14
MC8T97	606-83
	1341-15
MC8T98	607-36
	1341-16
MC9300	631-48
	3788-51
MC9301	612-77
MC9304	603-169
MC9307	2661-122
MC9309	627-132
MC930Series	★ 820
MC9310	610-28
MC9311	613-113
MC9312	629-128
MC9314	625-128
MC9316	607-188
MC9318	639-31
MC9322	629-5
MC9324	603-53
MC9328	633-22
	3791-8
MC9601	630-110
MC9602	631-8
MCA-series	3237-114
MCA1200ECL	★ 4796
	4460-29
MCA1300ALS	★ 4797
	4462-17
MCA2400ETL	★ 4797
MCA2500ECL	★ 4796
	4460-3
MCA2800ALS	★ 4797
	4460-35
MCA500ALS	★ 4797
	4462-15
MCA600ECL	★ 4796
	4460-25
MCC14457	592-125
MCC14458	592-126
MCH-01	3755-25
MCM100415	★ 4047
MCM100422	★ 4047
MCM100470	★ 4047
MCM100474	★ 4047
MCM100480	★ 4047
MCM100484	★ 4047
MCM10139	★ 4047
	597-159
	★ 4047
	3760-19
MCM10143	★ 4046
	597-166
	¶ 256-6
	★ 4046
	3770-60
	¶ 256-6
MCM10144	★ 4046
	598-21
	★ 4046
	3772-14
MCM10145	★ 4046
	598-6
	★ 4046
	3770-77
MCM10146	★ 4046
	598-42
	★ 4046
	3774-36
MCM10146A	★ 4046
	3774-14
MCM10147	★ 4046
	598-16
	★ 4046
	3771-108
MCM10148	★ 4046
	3771-76
MCM10149	★ 4047
	597-163
	★ 4047
	3760-68
MCM10152	★ 4046
	598-22
	★ 4046
	3772-12
MCM10415	★ 4047
	3774-19
MCM10415A	★ 4047
	598-43
	★ 4047
	3774-27
MCM10422	★ 4047
MCM10470	★ 4047
	598-55
	★ 4047
	3779-49
MCM10470A	★ 4047
	3779-33
MCM10474	★ 4047
	598-49
	★ 4047
	3775-72
MCM10474A	★ 4047
	598-50
	★ 4047
	3775-64
MCM10480	★ 4047
MCM10544	598-23
	3772-15
MCM10545	3770-79
MCM10546	598-44
	3774-51
MCM10547	598-17
MCM10548	598-11
MCM10H145	★ 4046
MCM14505A	587-138
	3771-80
MCM14505C	587-139
	3771-83
MCM14524A	★ 4048
	588-42
	★ 4048
	3783-3
MCM14524C	★ 4048
	588-43
	★ 4048
	3783-4
MCM14537A	587-148
	3772-3
MCM14537C	587-149
	3772-5
MCM14552A	587-165
	3771-70
MCM14552C	587-166
	3771-72
MCM2016-20	★ 4046
	★ 4052
	3778-125
MCM2016H-45	★ 4046
	★ 4052
	3777-103
	★ 4046
	★ 4052
	1343-128
MCM2016H-55	★ 4046
	★ 4052
	3777-108
MCM2016H-70	★ 4046
	★ 4052
	3777-123
MCM2114-20	★ 4046
	3776-63
MCM2114-25	★ 4046
	3776-92
MCM2114-30	★ 4046
	3776-125
MCM2114-45	★ 4046
	3777-29
MCM2115A-45	3774-56
MCM2115A-55	3774-74
MCM2115A-70	3774-89
MCM2125A-45	3774-60
MCM2125A-55	3774-75
MCM2125A-70	3774-93
MCM2147-100	3780-9
MCM2147-55	3779-93
MCM2147-70	3779-123
MCM2147-85	3780-5
MCM2167H-35	★ 4046
	★ 4053
	3782-15
MCM2167H-45	★ 4046
	★ 4053
	3782-24
MCM21L14-20	★ 4046
	3776-64
MCM21L14-25	★ 4046
	3776-93
MCM21L14-30	★ 4046
	3776-126
MCM21L14-45	★ 4046
	3777-30
MCM21L15A-45	3774-57
MCM21L15A-70	3774-90
MCM21L25A-45	3774-61
MCM21L25A-70	3774-94
MCM2708	3763-126
MCM2716-35	3765-55
MCM27519	★ 4047
MCM275191	★ 4047
MCM275291	★ 4047
MCM27545	★ 4047
MCM27547	★ 4047
MCM27A08	3763-114
MCM27L16-35	3765-56
MCM27S181	★ 4047
MCM27S191	3764-89
MCM27S25	★ 4047
MCM27S27	★ 4047
MCM27S281	★ 4047
MCM27S29	★ 4047
MCM27S291	3764-90
MCM27S31	★ 4047
MCM27S35	★ 4047
MCM27S37	★ 4047
MCM27S45	3764-80
MCM27S47	3764-81
MCM2802	3758-11
MCM2832	3758-107
MCM4027A-1	3768-20
	¶ 322-15
MCM4027A-2	3768-25
	¶ 322-15
MCM4027A-3	3768-33
	¶ 322-15
MCM4027A-4	3768-42
	¶ 322-15
MCM4116B-15	★ 4046
	3768-91
	¶ 320-10
	¶ 322-15
	¶ 322-16
MCM4116B-20	★ 4046
	3768-108
	¶ 320-10
	¶ 322-15
	¶ 322-16
MCM4116B-25	★ 4046
	3769-10
	¶ 320-10
	¶ 322-15
	¶ 322-16
MCM4116B-30	★ 4046
	3769-18
	¶ 320-10
	¶ 322-15
	¶ 322-16
MCM4517-10	★ 4046
	★ 4049
	3768-64
MCM4517-12	★ 4046
	★ 4049
	3768-73
MCM4517-15	★ 4046
	★ 4049
	3768-83
MCM4517-20	★ 4046
	★ 4049
	3768-100
MCM5101	588-29
MCM5101-65	3773-110
MCM5101-80	3773-119
MCM51L01-45	3773-83
MCM51L01-65	3773-111
MCM6116-12	★ 4046
	3778-37
MCM6116-15	★ 4046
	3778-64
MCM6116-20	★ 4046
	3778-106
MCM6147-55	★ 4046
	3779-80
MCM6147-70	★ 4046
	3779-110
MCM61L16-12	3778-38
MCM61L16-15	3778-65
MCM61L16-20	3778-107
MCM61L47-55	3779-81
MCM61L47-70	3779-111
MCM6256-10	★ 4051
	3769-129
MCM6256-20	★ 4051
	3770-5
	3770-18
MCM63128-15	★ 4048
	★ 4055
	★ 4056
	3786-113
MCM63128-20	★ 4048
	★ 4055
	★ 4056
	3786-114
MCM63256-15	★ 4048
	★ 4055
	★ 4056
	3787-48
MCM63256-20	★ 4048
	★ 4055
	★ 4056
	3787-54
MCM6508	588-8
MCM6508-25	3775-5
MCM6508-30	3775-26
MCM6508-40	3775-38
MCM6518	588-9
MCM6518-25	3775-12
MCM6518-30	3775-28
MCM6518-46	3775-49
MCM65256	3787-68
MCM65256-25	3787-69
MCM65516	★ 4048
	1343-90
	¶ 268-16
MCM65516-43	★ 4048
	3784-21
	¶ 268-16
MCM65516-55	★ 4048
	3784-46
	¶ 268-16
MCM6641-20	3780-40
MCM6641-25	3780-61
MCM6641-30	3780-93
MCM6641-45	3780-123
MCM6664A-15	★ 4046
	3769-75
	¶ 322-15
	¶ 322-16
MCM6664A-20	★ 4046
	3769-101
	¶ 322-15
	¶ 322-16
MCM66656	★ 4050
MCM6665A-12	★ 4046
	3769-51
MCM6665A-15	★ 4046
	3769-76
MCM6665A-20	★ 4046
	3769-102
MCM6665B	★ 4050
MCM6665B-12	★ 4046
	3769-52
MCM6665B-15	★ 4046
	3769-77
MCM6665B-20	★ 4046
	3769-103
MCM6665C-12	★ 4046
	3768-74
MCM6665C-15	★ 4046
	3768-84
MCM6665C-20	★ 4046
	3768-109
MCM6670	★ 4048
	3755-12
MCM66700	★ 4048
	3783-92
MCM66710	★ 4048
	3783-93
MCM66714	★ 4048
	3783-94
MCM66720	★ 4048
	3783-95
MCM66730	★ 4048
	3783-96
MCM66734	★ 4048
	3783-97
MCM6674	★ 4048
	3755-13
MCM66740	★ 4048
	3783-98
MCM66750	★ 4048
	3783-99
MCM66751	3783-100
MCM66760	★ 4048
	3783-101
MCM66770	★ 4048
	3783-102
MCM66780	★ 4048
	3783-103
MCM66790	★ 4048
	3783-104
MCM66L41-20	3780-41
MCM66L41-25	3780-62
MCM66L41-30	3780-94
MCM66L41-45	3780-124
MCM6810	★ 1505
	★ 4046
	3772-1
MCM68316	3756-8
MCM68364	★ 4048
	★ 4054
	3785-55
MCM68364-25	★ 4048
	★ 4054
	3785-87
MCM68364-30	★ 4048
	★ 4054
	3786-9
MCM68365-25	★ 4048
	★ 4054
	3785-88
MCM68365-35	★ 4048
	★ 4054
	3786-44
MCM68366-25	★ 4048
	★ 4054
	3785-89
MCM68366-35	★ 4048
	★ 4054
	3786-45
MCM68367-45	★ 4054
	3786-76
MCM68368-45	★ 4054
	3786-77
MCM68369-25	★ 4055
	3785-103
MCM68369-35	★ 4055
	3786-51
MCM68370-25	★ 4055
	3785-104
MCM68370-35	★ 4055
	3786-52
MCM68380	3786-108
MCM68708	3764-1
MCM68764	★ 4047
	3766-107
MCM68766	★ 4047
	3766-108
MCM68766-35	★ 4047
	3766-104
MCM68A10	★ 4046
	3771-122
MCM68A308	3783-60
MCM68A308P7	3783-61
MCM68A30A	3783-56
MCM68A316A	★ 4048
	3784-13
MCM68A316E	★ 4048
	3784-14
MCM68A316E-91	★ 4048
	3756-9
MCM68A316EP91	3784-15
MCM68A332	★ 4048
	3784-112
MCM68A332P2	3784-113
MCM68A364	3786-46
MCM68A364P3	3786-47
MCM68A708	3763-115
MCM68B10	★ 4046
	3771-115
	¶ 266-9
MCM68B308	3783-48
MCM68B30A	3783-49
MCM68B364	3785-90
MCM76161	★ 4047
	3765-28
MCM76161A	★ 4047
	3764-126
MCM76165	★ 4047
	3765-93
MCM7621	★ 4047
	3751-67
MCM7621A	★ 4047
	3761-38

Arranged alphanumerically from left to right.

© IC MASTER 1984

Motorola Semiconductor Products (Cont'd)

Device	Page-Line
MCM7641	★ 4047
	3762-37
MCM7641A	★ 4047
	3761-40
MCM7643	★ 4047
	3763-3
MCM7643A	★ 4047
	3762-96
MCM7649	★ 4047
	3762-30
MCM7649A	★ 4047
	3761-118
MCM7681	★ 4047
	3763-78
MCM7681A	★ 4047
	3763-49
MCM7685	★ 4047
	3764-55
MCM7685A	★ 4047
	3765-7
MCM93415C	★ 4046
	3774-65
MCM93415M	★ 4046
	3774-80
MCM93422	★ 4046
	3772-103
MCM93425	★ 4046
	3774-69
MCM93L422	★ 4046
	3772-91
	3772-97
MEX68SA2	★ 1923
MEX6801	★ 1923
MEX6801EVM	★ 1921
MEX6801EVM1	★ 1921
MEX6808-22	★ 2046
MEX68120EVM	★ 1921
MEX6816-1HR	★ 2046
MEX6816-22D	★ 2046
MEX6816-22S	★ 2046
MEX6820	★ 2046
MEX6821-2	★ 2046
MEX6832-1HR	★ 2046
MEX6832-22	★ 2046
MEX6848-1HR	★ 2046
MEX6848-22	★ 2046
MEX6850	★ 2046
MEX6850-2	★ 2046
MEX6864-1HR	★ 2046
MEX6864-22	★ 2046
MEX68KDM	1967-3
MEX68KECB	★ 1921
MEX68RR	★ 2046
MG8PPS	4355-6
MHQ3467	3157-165
MHQ4001A	3157-145
MHQ4002A	3157-146
MHQ4013	3157-147
MHQ4014	3157-148
MHW1121	3170-65
MHW1127	3170-66
MHW1171	3170-67
MHW1172	3170-68
MHW1182	3170-69
MHW1221	3170-70
MHW1222	3170-71
MHW1341	3170-72
MHW1342	3170-73
MHW1343	3170-74
MHW1391	3170-75
MHW1392	3170-76
MHW401	3156-46
MHW5181	3170-77
MHW5182	3170-78
MHW559	3170-79
MHW560	3170-80
MHW561	3170-81
MHW562	3170-82
MHW570	3170-83
MHW572	3170-84
MHW580	3170-85
MHW590	3156-47
MHW591	3156-48
MHW592	3156-49
MHW593	3156-50
MHW594	3170-86
MHW595	3170-87
MHW601	3156-51
MHW602	3156-52
MHW603	3156-53
MHW709	3156-54
MHW710	3156-55
MMBTS102	3238-131
MMBTS103	3238-132
MMBTS105	3238-133
MMH0026C	2681-44
MP6809UPDWNLD	★ 1924
MPC100	3222-27
MPQ3303	3157-149
MPQ3725	3157-150
MPQ3725A	3157-151
MPQ4003	3157-152
MPQ4004	3157-153
MPQ6842	1342-131
MPRINT703	★ 1925
MVME101	★ 2041
MVME110	★ 2041
	1967-4
MVME200	★ 2041
MVME201	★ 2041
MVME210	★ 2041
MVME300	★ 2041
MVME310	★ 2041
MVME315	★ 2041
MVME400	★ 2044
MVME410	★ 2044
MVME420	★ 2044
MVME435	★ 2044
MVME600	★ 2044
MVME605	★ 2044
MVME610	★ 2044
MVME615	★ 2044
MVME616	★ 2044
MVME620	★ 2044
MVME625	★ 2044
MVME930	★ 2041
MVME931	★ 2041
MVME932	★ 2044
MVME933	★ 2044
MVME935	★ 2044
MVMEBUG	★ 2041
NE565	3215-2
NE592	3156-92
OP-24G	3184-15
OP-27A	3181-46
OP-27B	3182-26
OP-27C	3183-19
OP-27E	3181-47
OP-27F	3182-27
OP-27G	3183-17
OP-37A	3181-58
OP-37B	3182-34
OP-37C	3183-35
OP-37E	3181-59
OP-37F	3182-35
OP-37G	3183-36
OP27A	3181-56
OP27E	3181-57
OP37A	3181-58
OP37E	3181-59
SAA1042	3238-103
SAA1042A	3238-102
SC42468	2679-15
SC42584	2679-17
SC42585	2679-18
SE592	3156-93
SG1525A	★ 3533
	3230-65
SG1526	★ 3533
	3230-66
SG1527A	★ 3533
	3230-67
SG2525A	★ 3533
	3230-68
SG2526	★ 3533
	3230-69
SG2527A	★ 3533
	3230-70
SG3525A	★ 3533
	3230-71
SG3526	★ 3533
	3230-72
SG3527A	★ 3533
	3230-73
SN54ALS00	621-163
SN54ALS01	621-100
SN54ALS02	624-58
SN54ALS03	621-101
SN54ALS04	607-57
SN54ALS05	606-130
SN54ALS08	619-92
SN54ALS09	619-53
SN54ALS10	620-136
SN54ALS109	★ 823
	617-51
SN54ALS11	618-181
SN54ALS12	★ 822
	620-104
SN54ALS13	★ 822
	637-138
SN54ALS132	★ 823
	638-27
SN54ALS138	★ 823
	613-41
SN54ALS139	★ 823
	612-124
SN54ALS14	★ 822
	638-62
SN54ALS15	★ 822
	618-148
SN54ALS151	★ 823
	629-157
SN54ALS153	★ 823
	628-40
SN54ALS157	★ 823
	629-18
SN54ALS158	★ 823
	628-127
SN54ALS160	★ 823
	610-40
SN54ALS161	★ 823
	608-8
SN54ALS162	★ 823
	610-80
SN54ALS163	★ 823
	608-53
SN54ALS164	★ 823
	632-33
SN54ALS168	★ 823
	610-185
SN54ALS169	★ 823
	608-181
SN54ALS190	★ 823
	611-81
SN54ALS191	★ 823
	609-40
SN54ALS192	★ 823
	611-45
SN54ALS193	★ 823
	609-93
SN54ALS20	★ 822
	620-50
SN54ALS21	★ 822
	618-121
SN54ALS22	★ 822
	620-6
SN54ALS238	★ 823
	613-80
SN54ALS239	★ 823
	612-161
SN54ALS240	★ 823
	633-142
SN54ALS241	★ 823
	634-13
SN54ALS242	★ 823
	633-65
SN54ALS243	★ 823
	633-66
SN54ALS244	★ 823
	634-72
SN54ALS245	★ 823
	635-69
SN54ALS251	★ 823
	630-36
SN54ALS253	★ 823
	627-165
SN54ALS257	★ 823
	628-163
SN54ALS258	★ 823
	628-88
SN54ALS27	★ 822
	623-183
SN54ALS273	★ 823
	616-65
SN54ALS28	★ 822
	624-59
SN54ALS32	★ 822
	623-87
SN54ALS33	★ 822
	624-25
SN54ALS352	★ 823
	627-139
SN54ALS353	★ 823
	627-105
SN54ALS37	★ 823
	621-49
SN54ALS373	★ 823
	626-40
SN54ALS374	★ 823
	616-89
SN54ALS377	★ 823
	616-149
SN54ALS38	★ 823
	620-195
SN54ALS40	★ 823
	619-159
SN54ALS51	★ 823
	622-127
SN54ALS533	★ 823
	626-102
SN54ALS534	★ 823
	616-34
SN54ALS537	★ 823
	612-108
SN54ALS538	★ 823
	613-42
SN54ALS539	★ 823
	612-120
SN54ALS54	623-3
SN54ALS540	★ 823
	633-143
SN54ALS541	★ 823
	634-14
SN54ALS55	★ 823
SN54ALS560	★ 823
	610-154
SN54ALS561	★ 823
	608-149
SN54ALS563	★ 823
	626-103
SN54ALS564	★ 823
	616-35
SN54ALS568	★ 823
	610-175
SN54ALS569	★ 823
	608-169
SN54ALS573	★ 823
	626-41
SN54ALS574	★ 823
	616-90
SN54ALS575	★ 823
	616-91
SN54ALS576	★ 823
	619-93
SN54ALS577	★ 823
	616-92
SN54ALS580	★ 823
	626-104
SN54ALS620	★ 823
	636-52
SN54ALS621	★ 823
	636-28
SN54ALS622	★ 823
	636-26
SN54ALS623	★ 823
	636-53
SN54ALS638	★ 823
	634-121
SN54ALS639	★ 823
	634-122
SN54ALS640	★ 823
	634-158
SN54ALS641	★ 823
	635-49
SN54ALS642	★ 823
	634-139
SN54ALS643	★ 823
	634-159
SN54ALS644	★ 823
	635-134
SN54ALS646	★ 823
	636-113
SN54ALS647	★ 823
	635-166
SN54ALS648	★ 823
	636-114
SN54ALS649	★ 823
	635-167
SN54ALS651	★ 823
	635-70
SN54ALS652	★ 823
	635-71
SN54ALS653	★ 823
SN54ALS654	★ 823
SN54ALS671	★ 823
	631-22
SN54ALS672	★ 823
	631-23
SN54ALS690	★ 823
	610-81
SN54ALS691	★ 823
	607-164
SN54ALS692	★ 823
	610-82
SN54ALS693	★ 823
	607-165
SN54ALS694	★ 823
	611-160
SN54ALS695	★ 823
	611-161
SN54ALS696	★ 823
	610-161
SN54ALS697	★ 823
	609-41
SN54ALS698	★ 823
	610-162
SN54ALS699	★ 823
	608-163
SN54ALS74	★ 823
	614-164
SN54ALS790	★ 823
	637-2
SN54ALS873	★ 823
	625-73
SN54ALS874	★ 823
	614-124
SN54ALS876	★ 823
	614-125
SN54ALS878	★ 823
SN54ALS879	★ 823
SN54ALS880	★ 823
	625-155
SN54ALS91	★ 823
	632-147
SN54LS00	★ 822
	621-194
SN54LS01	★ 822
	621-121
SN54LS251	630-51
SN54LS02	★ 822
	624-88
SN54LS03	★ 822
	621-122
SN54LS04	★ 822
	607-85
SN54LS05	★ 822
	606-146
SN54LS08	★ 822
	619-123
SN54LS09	★ 822
	619-63
SN54LS10	★ 822
	620-158
SN54LS107A	617-135
SN54LS109A	617-68
SN54LS11	★ 822
	619-22
SN54LS112A	618-62
SN54LS113A	618-17
SN54LS114A	618-93
SN54LS12	620-112
SN54LS122	630-130
SN54LS123	630-173
SN54LS125A	606-3
SN54LS126A	605-151
SN54LS13	637-145
SN54LS132	638-34
SN54LS133	622-76
SN54LS136	624-138
SN54LS137	613-94
SN54LS138	613-61
SN54LS139	612-141
SN54LS14	638-69
SN54LS145	612-61
SN54LS147	639-119
SN54LS148	639-50
SN54LS15	618-158
SN54LS151	629-172
SN54LS152	630-15
SN54LS153	628-56
SN54LS155	613-24
SN54LS156	612-176
SN54LS157	629-35
SN54LS158	628-143
SN54LS160A	610-56
SN54LS161A	608-24
SN54LS162A	610-104
SN54LS163A	608-70
SN54LS164	632-44
	3790-89
SN54LS165	632-91
	3790-41
SN54LS166	632-109
SN54LS168	611-11
SN54LS169	609-11
SN54LS173A	615-136
SN54LS174	615-174
SN54LS175	615-61
SN54LS181	604-50
SN54LS182	604-95
SN54LS183	603-175
SN54LS190	611-95
SN54LS191	609-59
SN54LS192	611-60
SN54LS193	609-106
SN54LS194A	631-172
	3788-117
SN54LS195A	631-65
	3788-118
SN54LS196	610-6
SN54LS197	607-151
SN54LS20	620-75
SN54LS21	618-137
SN54LS22	620-20
SN54LS221	630-147
SN54LS240	633-172
	2669-67
SN54LS241	634-47
	2669-24
SN54LS242	633-106
	2675-26
SN54LS243	633-107
	2675-27
SN54LS244	634-97
	2669-25
SN54LS245	635-116
	2678-4
SN54LS247	2661-165
SN54LS248	2661-123
SN54LS249	2661-94
SN54LS251	630-51
SN54LS253	628-7
SN54LS256	625-56
SN54LS257A	628-177
SN54LS258A	628-104
SN54LS259	626-30
SN54LS26	621-23
SN54LS260	623-156
SN54LS266	625-36
SN54LS27	624-10
SN54LS273	616-78
SN54LS279	625-141
SN54LS28	624-89
SN54LS280	639-91
SN54LS283	605-97
SN54LS290	609-147
SN54LS293	608-127
SN54LS295A	631-33
	3788-119
SN54LS298	629-91
SN54LS299	633-7
SN54LS30	622-45
SN54LS32	623-109
SN54LS322	605-133
SN54LS323	633-8
SN54LS33	624-31
SN54LS348	639-51
SN54LS352	627-153
SN54LS353	627-119
SN54LS365A	606-60
SN54LS366A	607-13
SN54LS367A	606-61
SN54LS368A	607-14
SN54LS37	621-58
SN54LS373	626-73
SN54LS374	616-130
SN54LS375	625-100
SN54LS377	616-159
SN54LS378	616-14
SN54LS379	615-109
SN54LS38	621-7
SN54LS385	603-12
SN54LS386	624-186
SN54LS390	610-133
SN54LS393	608-88
SN54LS395	3788-120
SN54LS398	629-92
SN54LS399	629-93
SN54LS40	619-175

¶ Indicates page number in Application Note Directory.
★ Indicates additional data is provided on the page noted.

IC MASTER

Motorola Semiconductor Products (Cont'd)

SN54LS42 612-96
SN54LS47 2661-166
SN54LS48 2661-124
SN54LS49 2661-95
SN54LS490 610-134
SN54LS51 622-138
SN54LS54 623-42
SN54LS540 633-173
2669-68
SN54LS541 634-48
2669-26
SN54LS55 622-174
SN54LS568 611-29
SN54LS569 609-76
SN54LS604 625-175
SN54LS605 625-176
SN54LS606 625-177
SN54LS607 625-178
SN54LS621 636-48
SN54LS622 636-49
SN54LS623 636-82
SN54LS640 635-23
2678-5
SN54LS641 635-61
2677-66
SN54LS642 634-151
2677-67
SN54LS643 635-24
SN54LS644 635-146
SN54LS645 635-117
2678-6
SN54LS668 611-12
SN54LS669 609-120
SN54LS670 627-31
3770-46
SN54LS673 633-57
SN54LS674 633-44
SN54LS682 603-130
SN54LS683 603-110
SN54LS684 603-131
SN54LS685 603-111
SN54LS686 603-132
SN54LS687 603-112
SN54LS688 603-133
SN54LS689 603-113
SN54LS716 611-147
SN54LS718 611-141
SN54LS73A 617-136
SN54LS74A 615-16
SN54LS75 625-101
SN54LS76A 617-174
SN54LS77 625-119
SN54LS78A 617-88
SN54LS795 606-99
SN54LS796 606-100
SN54LS797 606-101
SN54LS798 606-102
SN54LS83A 605-98
SN54LS848 639-63
SN54LS85 603-54
SN54LS86 624-187
SN54LS90 609-148
SN54LS91 632-151
SN54LS92 611-126
SN54LS93 608-128
SN54LS95B 631-102
3788-121
SN54S148 639-61
SN54S348 639-62
SN54SL170 627-17
SN74ALS00 ★ **822**
621-164
SN74ALS01 ★ **822**
621-102
SN74ALS02 ★ **822**
624-60
SN74ALS03 ★ **822**
621-103
SN74ALS04 ★ **822**
607-58
SN74ALS05 ★ **822**
606-131
SN74ALS08 ★ **822**
619-94
SN74ALS09 ★ **822**
619-54
SN74ALS10 ★ **822**
620-137
SN74ALS109 ★ **823**
617-52
SN74ALS11 ★ **822**
619-1
SN74ALS12 ★ **822**
620-105
SN74ALS13 ★ **822**
637-139
SN74ALS132 ★ **823**
638-28
SN74ALS138 ★ **823**
613-43
SN74ALS139 ★ **823**
612-125
SN74ALS14 ★ **822**
638-63
SN74ALS15 ★ **822**
618-149
SN74ALS151 ★ **823**
629-158
SN74ALS153 ★ **823**
628-41
SN74ALS157 ★ **823**
629-19
SN74ALS158 ★ **823**
628-128
SN74ALS160 ★ **823**
610-41
SN74ALS161 ★ **823**
608-9
SN74ALS162 ★ **823**
610-83
SN74ALS163 ★ **823**
608-54
SN74ALS164 ★ **823**
632-34
SN74ALS168 ★ **823**
610-186
SN74ALS169 ★ **823**
608-182
SN74ALS190 ★ **823**
611-82
SN74ALS191 ★ **823**
609-42
SN74ALS192 ★ **823**
611-46
SN74ALS193 ★ **823**
609-94
SN74ALS20 ★ **822**
620-51
SN74ALS21 ★ **822**
618-122
SN74ALS22 ★ **822**
620-7
SN74ALS238 ★ **823**
613-81
SN74ALS239 ★ **823**
612-162
SN74ALS240 ★ **823**
633-144
SN74ALS241 ★ **823**
634-15
SN74ALS242 ★ **823**
633-67
SN74ALS243 ★ **823**
633-68
SN74ALS244 ★ **823**
634-73
SN74ALS245 ★ **823**
635-72
SN74ALS251 ★ **823**
630-37
SN74ALS253 ★ **823**
627-166
SN74ALS257 ★ **823**
628-164
SN74ALS258 ★ **823**
628-89
SN74ALS27 ★ **822**
624-1
SN74ALS273 ★ **823**
616-66
SN74ALS28 ★ **822**
624-61
SN74ALS32 ★ **822**
623-88
SN74ALS33 ★ **822**
624-26
SN74ALS352 ★ **823**
627-140
SN74ALS353 ★ **823**
627-106
SN74ALS37 ★ **823**
621-50
SN74ALS373 ★ **823**
626-42
SN74ALS374 ★ **823**
616-93
SN74ALS377 ★ **823**
616-150
SN74ALS38 ★ **823**
620-196
SN74ALS40 ★ **823**
619-160
SN74ALS51 ★ **823**
622-128
SN74ALS533 ★ **823**
626-105
SN74ALS534 ★ **823**
616-36
SN74ALS537 ★ **823**
612-109
SN74ALS538 ★ **823**
613-44
SN74ALS539 ★ **823**
612-121
SN74ALS54 623-4
SN74ALS540 ★ **823**
633-145
SN74ALS541 ★ **823**
634-16
SN74ALS55 ★ **823**
SN74ALS560 ★ **823**
610-155
SN74ALS561 ★ **823**
608-150
SN74ALS563 ★ **823**
626-106
SN74ALS564 ★ **823**
616-37
SN74ALS568 ★ **823**
610-176
SN74ALS569 ★ **823**
SN74ALS573 ★ **823**
626-43
SN74ALS574 ★ **823**
616-94
SN74ALS575 ★ **823**
616-95
SN74ALS576 ★ **823**
619-95
SN74ALS577 ★ **823**
616-96
SN74ALS580 ★ **823**
626-107
SN74ALS620 ★ **823**
636-54
SN74ALS621 ★ **823**
636-29
SN74ALS622 ★ **823**
636-27
SN74ALS623 ★ **823**
636-55
SN74ALS638 ★ **823**
634-123
SN74ALS639 ★ **823**
634-124
SN74ALS640 ★ **823**
634-160
SN74ALS641 ★ **823**
635-50
SN74ALS642 ★ **823**
634-140
SN74ALS643 ★ **823**
634-161
SN74ALS644 ★ **823**
635-135
SN74ALS646 ★ **823**
636-115
SN74ALS647 ★ **823**
635-168
SN74ALS648 ★ **823**
636-116
SN74ALS649 ★ **823**
635-169
SN74ALS651 ★ **823**
635-73
SN74ALS652 ★ **823**
635-74
SN74ALS653 ★ **823**
SN74ALS654 ★ **823**
SN74ALS671 ★ **823**
631-24
SN74ALS672 ★ **823**
631-25
SN74ALS690 ★ **823**
610-84
SN74ALS691 ★ **823**
607-166
SN74ALS692 ★ **823**
610-85
SN74ALS693 ★ **823**
607-167
SN74ALS694 ★ **823**
611-162
SN74ALS695 ★ **823**
611-163
SN74ALS696 ★ **823**
610-163
SN74ALS697 ★ **823**
609-43
SN74ALS698 ★ **823**
610-164
SN74ALS699 ★ **823**
609-44
SN74ALS74 ★ **823**
614-165
SN74ALS790 ★ **823**
637-3
★ **823**
2665-34
SN74ALS873 ★ **823**
625-74
SN74ALS874 ★ **823**
614-126
SN74ALS876 ★ **823**
614-127
SN74ALS878 ★ **823**
SN74ALS879 ★ **823**
SN74ALS880 ★ **823**
625-156
SN74ALS91 ★ **823**
632-148
SN74LS00 621-195
SN74LS01 621-123
SN74LS02 624-90
SN74LS03 621-124
SN74LS04 607-86
SN74LS05 606-147
SN74LS08 619-124
SN74LS09 619-64
SN74LS10 620-159
SN74LS107A 617-137
SN74LS109A 617-69
SN74LS11 619-23
SN74LS112A 618-63
SN74LS113A 618-18
SN74LS114A 618-94
SN74LS12 620-113
SN74LS122 630-131
SN74LS123 630-174
SN74LS125A 606-4
SN74LS126A 605-152
SN74LS13 637-146
SN74LS132 638-35
SN74LS133 622-77
SN74LS136 624-139
SN74LS137 613-95
SN74LS138 613-62
SN74LS139 612-142
SN74LS14 638-70
SN74LS145 612-62
SN74LS147 639-120
SN74LS148 639-52
SN74LS15 618-159
SN74LS151 629-173
SN74LS153 628-57
SN74LS155 613-25
SN74LS156 612-177
SN74LS157 629-36
SN74LS158 628-144
SN74LS160A 610-57
SN74LS161A 608-25
SN74LS162A 610-105
SN74LS163A 608-71
¶ 274-4
SN74LS164 632-45
3790-90
SN74LS165 632-92
¶ 274-4
3790-42
¶ 274-4
SN74LS166 632-110
SN74LS168 611-13
SN74LS169 609-12
SN74LS170 627-18
3770-30
SN74LS173A 615-137
SN74LS174 615-175
SN74LS175 615-62
¶ 274-4
SN74LS181 604-51
SN74LS182 604-96
SN74LS183 604-1
SN74LS190 611-96
SN74LS191 609-60
SN74LS192 611-61
SN74LS193 609-107
SN74LS194A 631-173
3788-122
SN74LS195A 631-66
3788-123
SN74LS196 610-7
SN74LS197 607-152
SN74LS20 620-76
SN74LS21 618-138
SN74LS22 620-21
SN74LS221 630-148
SN74LS240 633-174
2669-69
SN74LS241 634-49
2669-27
SN74LS242 633-108
2675-56
SN74LS243 633-109
2675-57
SN74LS244 634-98
2669-28
SN74LS245 635-118
2678-18
SN74LS247 2661-167
SN74LS248 2661-125
SN74LS249 2661-96
SN74LS251 630-52
SN74LS253 628-8
SN74LS256 625-57
SN74LS257A 628-178
SN74LS258A 628-105
SN74LS259 626-31
SN74LS26 621-24
SN74LS260 623-157
SN74LS266 625-37
SN74LS27 624-11
SN74LS273 616-79
SN74LS279 625-142
SN74LS28 624-91
SN74LS280 639-92
SN74LS283 605-99
SN74LS290 609-149
SN74LS293 608-129
SN74LS295A 631-34
3788-124
SN74LS298 629-94
SN74LS299 633-9
SN74LS30 622-46
SN74LS32 623-110
SN74LS322 605-134
SN74LS323 633-10
SN74LS33 624-32
SN74LS348 639-53
SN74LS352 627-154
SN74LS353 627-120
SN74LS365A 606-62
SN74LS366A 607-15
SN74LS367A 606-63
SN74LS368A 607-16
SN74LS37 621-59
SN74LS373 626-74
SN74LS374 616-131
¶ 274-4
SN74LS375 625-102
SN74LS377 616-160
¶ 274-4
SN74LS378 616-15
SN74LS379 615-110
SN74LS38 621-8
SN74LS385 603-13
SN74LS386 624-188
SN74LS390 610-135
SN74LS393 608-89
SN74LS395 3788-125
SN74LS398 629-95
SN74LS399 629-96
SN74LS40 619-176
SN74LS42 612-97
SN74LS47 2662-1
SN74LS48 2661-126
SN74LS49 2661-97
SN74LS490 610-136
SN74LS51 622-139
SN74LS54 623-43
SN74LS540 633-175
2669-70
SN74LS541 634-50
2669-29
SN74LS55 622-175
SN74LS568 611-30
SN74LS569 609-77
SN74LS604 625-179
SN74LS605 625-180
SN74LS606 625-181
SN74LS607 626-1
SN74LS620 636-83
SN74LS621 636-50
SN74LS622 636-51
SN74LS623 636-84
SN74LS640 635-25
2678-19
SN74LS641 635-62
2678-9
SN74LS642 634-152
2678-10
SN74LS643 635-26
SN74LS644 635-147
SN74LS645 635-119
2678-20
SN74LS668 611-14
SN74LS669 609-121
SN74LS670 627-32
3770-47
SN74LS673 633-58
SN74LS674 633-45
SN74LS682 603-134
SN74LS683 603-114
SN74LS684 603-135
SN74LS685 603-115
SN74LS686 603-136
SN74LS687 603-116
SN74LS688 603-137
SN74LS689 603-117
SN74LS716 611-148
SN74LS718 611-142
SN74LS724 637-92
SN74LS73A 617-138
SN74LS74A 615-17
SN74LS75 625-103
SN74LS76A 617-175
SN74LS77 625-120
SN74LS783 627-104
1343-98
SN74LS78A 617-89
SN74LS795 606-103
SN74LS796 606-104
SN74LS797 606-105
SN74LS798 606-106
SN74LS83A 605-100
SN74LS848 639-64
SN74LS85 603-55
SN74LS86 624-189
SN74LS90 609-150
SN74LS91 632-152
SN74LS92 611-127
SN74LS93 608-130
SN74LS95B 631-103
3788-126
SN75172 ★ **3064**
SN75173 ★ **3064**
SN75174 ★ **3064**
SN75175 ★ **3064**
SN75176 ★ **3064**
2678-44
SN75177 2678-45
SN75178 2678-46
TCA4500 3168-132
TDA1085A 3234-151
TDA1185 3239-3
TDA1190 3171-158
TDA11902 3171-159
TDA1190P 3171-160
TDA1285 3232-3
TDA2002 3164-144
TDA2002A 3164-145
TDA3190P 3171-161
TL071 3200-54
TL071AC 3198-14
TL071BC 3192-51
TL072AC 3208-15
TL072BC 3205-56
TL072C 3209-24

Arranged alphanumerically from left to right.

© IC MASTER 1984

Motorola Semiconductor Products (Cont'd)

Device	Page-Line
TL072M	3208-14
TL074AC	3212-22
TL074BC	3212-21
TL074C	3213-18
TL074M	3213-6
TL081	3202-25
TL081A	3197-56
TL081B	3192-43
TL081M	3198-13
TL082	3209-48
TL082A	3208-8
TL082B	3205-51
TL082M	3208-13
TL084	3213-35
TL084A	3212-11
TL084M	3213-5
TL431C	★ **3535**
	3228-92
TL431M	★ **3535**
	3228-93
TL494C	★ **3533**
	3230-74
TL494M	★ **3533**
	3230-75
TL495C	★ **3533**
	3230-76
TL495M	★ **3533**
	3230-77
TMS27A16	3765-46
UAA1016A	3239-94
UAA1016B	3239-95
ULN2001A	★ **3064**
ULN2002A	★ **3064**
ULN2003A	★ **3064**
ULN2004A	★ **3064**
ULN2068	3157-102
ULN2068B	★ **3064**
ULN2074	3157-103
ULN2074B	★ **3064**
ULN2801	2680-31
ULN2801A	★ **3064**
ULN2802	2680-38
ULN2802A	★ **3064**
ULN2803	2680-12
ULN2803A	★ **3064**
ULN2804	2680-1
ULN2804A	★ **3064**
VERSAdes	★ **1917**
VERSAmodule	1967-5
VMC68/2	★ **1916**
VMD/10	★ **1914**
μ78S40	★ **3533**
uA758A	3168-133
uA78540	3230-78
μA9363A	★ **3064**

National Semiconductor

Device	Page-Line
5413	637-132
AD7520J	2647-7
AD7520K	2646-27
AD7520L	2645-21
AD7520S	2647-8
AD7520T	2646-28
AD7520U	2645-22
AD7521J	2656-25
AD7521K	2656-12
AD7521L	2656-1
AD7521S	2656-26
AD7521T	2656-13
AD7521U	2656-2
ADC0800P	2628-32
ADC0800PC	2628-33
ADC0801	2625-37
ADC0801C	2625-38
ADC0802	2627-32
ADC0802C	2627-33
ADC0803C	2627-34
ADC0804C	2628-24
ADC0805C	2628-25
ADC0808	2627-18
	3233-16
ADC0809	3233-17
ADC0809C	2628-20
ADC0816	2627-20
ADC0816C	2627-19
	3233-51
	1345-42
ADC0817	2628-21
ADC0817C	3233-52
ADC0820B	2626-10
ADC0820C	2628-4
ADC0831B	2627-13
ADC0831C	2628-13
ADC0832B	2627-14
ADC0832C	2628-14
ADC0833B	2627-15
ADC0833C	2628-15
ADC0834B	2627-16
ADC0834C	2628-16
ADC0838B	2627-17
ADC0838C	2628-17
ADC0844B	★ **3537**
	2627-6
	2628-18
ADC1001C	2630-10
ADC1021C	2630-11
ADC1210	2634-20
ADC1210C	2634-21
ADC1211	2635-15
ADC1211C	2635-16
ADC3511	2637-11
	¶ 280-13
ADC3711	2637-45
	¶ 280-13
	¶ 308-6
ADD3501	2637-12
	¶ 307-16
ADD3701	2637-46
ADM2901AC	605-59
AF100	3232-21
AF120	3217-110
AF121	3216-19
AF122	3216-20
AF132	3217-79
AF133	3217-80
	¶ 298-10
AF134	3217-81
	¶ 298-10
AF150	3232-22
AF151	3232-23
AH0014	2621-8
AH0014C	2621-9
AH0015	2616-85
AH0015C	2616-86
AH0019	2619-107
AH0019C	2619-108
AH0126	2620-70
AH0126C	2620-71
AH0129	2620-42
AH0129C	2620-43
AH0133	2615-121
AH0133C	2615-122
AH0134	2616-30
AH0134C	2616-31
AH0139	2620-112
AH0139C	2620-113
AH0140	2620-21
AH0140C	2620-22
AH0141	2615-92
AH0141C	2615-93
AH0142	2621-1
AH0142C	2621-2
AH0143	2618-67
AH0143C	2618-68
AH0144	2618-37
AH0144C	2618-38
AH0145	2620-99
AH0145C	2620-100
AH0146	2618-16
AH0146C	2618-17
AH0151	2615-100
AH0151C	2615-101
AH0152	2616-7
AH0152C	2616-8
AH0153	2620-25
AH0153C	2620-26
AH0154	2620-55
AH0154C	2620-56
AH0161	2618-20
AH0161C	2618-21
AH0162	2618-50
AH0162C	2618-51
AH0163	2620-103
AH0163C	2620-104
AH0164	2620-117
AH0164C	2620-118
AH2114	2618-81
AH2114C	2618-84
AH5009C	2621-86
AH5010C	2621-93
AH5011C	2621-112
AH5012C	2621-119
AM1000	2621-27
	¶ 291-9
AM1001	2621-28
	¶ 291-9
AM1002	2621-35
	¶ 291-9
AM181	2615-112
	2615-116
AM182	2616-16
	2616-20
AM184	2620-35
	2620-39
AM185	2620-60
	2620-64
AM187	2618-30
	2618-34
	2618-56
AM188	2618-60
	2619-21
AM190	2619-26
	2619-32
AM191	2619-36
	2617-83
AM193	2617-95
AM194	2622-14
AM2009	2622-15
AM2009C	2616-1
AM281	2616-5
	2616-23
AM282	2616-37
	2616-41
AM284	2620-49
	2620-53
AM285	2620-75
	2620-79
AM287	2618-44
	2618-48
AM288	2618-72
	2618-76
AM290	2619-29
	2619-31
AM291	2619-42
	2619-46
AM3705C	2623-107
AM9709C	2621-87
AM9710C	2621-94
AM9711C	2621-113
AM9712C	2621-120
AM97C09	2621-88
AM97C10C	2621-95
AM97C11C	2621-114
AM97C12C	2621-121
BLC-80/05	1963-11
BLC-80/10	1961-30
BLC-80/11	1961-31
BLC-80/11A	1961-32
BLC-80/11B	1961-33
BLC-80/14	1961-34
BLC-80/14A	1961-35
BLC-80/204	1963-3
BLC-80/24	1963-29
BLC-80/28	1963-30
BLC-80/316	1957-7
BLC-86/05	1967-22
BLC-86/1213	1967-12
CD4000C	584-122
CD4000M	584-123
CD4001A	585-40
CD4001BC	585-41
CD4001BM	585-42
CD4002A	584-148
CD4002BC	584-149
CD4002BM	584-150
CD4006A	591-166
	3789-102
CD4006BC	591-167
CD4006BM	591-168
CD4007C	573-149
CD4007M	573-150
CD4008BC	571-40
CD4008BM	571-41
CD4009AC	572-74
CD4009AM	572-75
CD40106BC	593-129
CD40106BM	593-130
CD4010A	572-119
CD4011AC	583-80
CD4011AM	583-81
CD4011BC	583-82
CD4011BM	583-83
CD4012A	582-179
CD4012BC	582-180
CD4012BM	582-181
CD4013BC	580-50
CD4013BM	580-51
CD4014A	591-131
	3790-57
CD4014BC	591-132
CD4014BM	591-133
CD4015A	3789-73
CD4015AC	590-54
CD4015BC	590-55
CD4015BM	590-56
CD40160BC	576-103
CD40160BM	576-104
CD40161BC	574-86
CD40161BM	574-87
CD40162BC	576-63
CD40162BM	576-64
CD40163BC	574-51
CD40163BM	574-52
CD4016BC	2617-64
CD4016BM	2617-65
CD40174BC	580-162
CD40174BM	580-163
CD40175B	580-134
CD4017BC	576-22
CD4017BM	576-23
CD4018BC	577-144
CD4018BM	577-145
CD40192BC	576-143
CD40192BM	576-144
CD40193BC	574-132
CD40193BM	574-133
CD40195BC	590-131
CD40195BM	590-132
CD4019BC	583-175
CD4019BM	583-176
CD4020BC	575-132
CD4020BM	575-133
CD4021A	591-16
	3790-58
CD4021BC	591-17
CD4021BM	591-18
CD4022BC	577-115
CD4022BM	577-116
CD4023BC	583-26
CD4023BM	583-27
CD4024BC	575-55
CD4024BM	575-56
CD4025A	584-189
CD4025BC	584-190
CD4025BM	584-191
CD4027BC	582-19
CD4027BM	582-20
CD4028BC	578-34
CD4028BM	578-35
CD4029BC	577-163
CD4029BM	577-164
CD4030A	585-122
CD4031BC	592-3
	3791-46
CD4031BM	592-4
	3791-47
CD4034BC	591-37
	3790-17
CD4034BM	591-38
	3790-18
CD4035BC	590-154
	3789-40
CD4035BM	590-155
	3789-50
CD4040BC	575-95
CD4040BM	575-96
CD4041C	572-30
CD4041M	572-31
CD4042BC	586-54
CD4042BM	586-55
CD4043A	586-108
CD4043BC	586-109
CD4043BM	586-110
CD4044A	586-87
CD4044BC	586-88
CD4044BM	586-89
CD4046BC	592-92
	3214-38
CD4046BM	592-93
	3214-39
CD4047BC	589-77
CD4047BM	589-78
CD4048BC	586-9
CD4048BM	586-10
CD4049UB	572-94
CD4050BC	572-138
CD4050BM	572-139
CD4052BC	2622-84
CD4052BM	2622-85
CD4053BC	2619-63
CD4053BM	2619-64
CD4060BC	575-161
CD4060BM	575-162
CD4066BC	2617-31
CD4066BM	2617-32
CD4069C	573-197
CD4069M	573-198
CD4070BC	585-123
CD4070BM	585-124
CD4071BC	584-86
CD4071BM	584-87
CD4072BC	584-34
CD4072BM	584-35
CD4073BC	582-88
CD4073BM	582-89
CD4075BC	584-53
CD4075BM	584-54
CD4076BC	580-98
CD4076BM	580-99
CD4081BC	582-126
CD4081BM	582-127
CD4082BC	582-69
CD4082BM	582-70
CD4089BC	593-6
CD4089BM	593-7
CD4093BC	593-93
CD4093BM	593-94
CD4099BC	587-53
CD4099BM	587-54
CD4501BC	2623-39
CD4501BM	2623-40
CD4503BC	573-46
CD4503BM	573-47
CD4507BC	585-125
CD4507BM	585-126
CD4510BC	576-145
CD4510BM	576-146
CD4511BC	580-1
	2662-48
CD4511BM	580-2
	2662-49
CD4512BC	588-189
CD4512BM	588-190
CD4514BC	579-30
CD4514BM	579-31
CD4515BC	579-32
CD4515BM	579-33
CD4516BC	574-134
CD4516BM	574-135
CD4518BC	577-26
CD4518BM	577-27
CD4519BC	588-158
CD4519BM	588-159
CD4520BC	575-8
CD4520BM	575-9
CD4522BC	577-1
CD4522BM	577-2
CD4526BC	574-184
CD4526BM	574-185
CD4527BC	593-17
CD4527BM	593-18
CD4528BC	589-99
CD4528BM	589-100
CD4529BC	2622-73
	2623-19
CD4529BM	2622-74
	2623-20
CD4538BC	589-132
CD4538BM	589-133
CD4543BC	579-135
CD4543BM	579-136
CD4584BC	593-131
CD4584BM	593-132
CD4723BC	586-23
CD4723BM	586-24
CD4724BC	587-55
CD4724BM	587-56
CIM-802	1955-6
CIM-802A	1955-7
CIM-804	1955-14
COP210C	★ **1526**
	1338-56
COP211C	★ **1526**
	1338-57
COP2304	1338-52
COP2340	1338-81
COP2341	1338-82
COP2342	1338-83
COP2404	1338-40
	1338-53
	1259-14
COP2440	1338-84
	1259-15
COP2440R	1338-45
	1338-89
	1259-16
COP2441	1338-85
	1259-17
COP2441R	1338-46
COP2442	1338-86
	1259-18
COP310C	★ **1526**
	1338-58
COP310L	★ **1526**
	1338-59
COP311C	1338-60
COP311L	1338-61
COP320	1338-62
COP320L	1338-63
COP321	1338-64
COP321L	1338-65
COP324C	★ **1527**
	1338-41
COP325C	★ **1527**
	1338-42
COP340	1338-66
COP341	1338-67
COP342	1338-51
COP344C	★ **1527**
	1338-43
COP345C	★ **1527**
	1338-44
COP370	1338-95
COP398	1338-93
COP399	1338-97
COP402	1338-54
	1259-19
COP402M	1338-47
	1259-20
COP404	★ **1525**
	1338-55
COP404LP	★ **1525**
	1259-21
COP404LS	★ **1525**
	1259-22
COP410C	★ **1526**
	1338-68
	★ **1526**
	1259-23
COP410L	★ **1526**
	1338-69
	★ **1526**
	1259-24
COP411C	★ **1526**
	1338-70
	★ **1526**
	1259-25
COP411L	★ **1526**
	1338-71
	★ **1526**
	1259-26
COP420	1338-72
	1259-27
COP420L	1338-73
	1259-28
COP420R	1338-48
	1338-90
	1259-29
COP421	1338-74
COP421L	1338-75
COP424C	★ **1527**
	1259-30
COP425C	★ **1527**
	1259-31
COP430	1338-99
COP431	1338-100
COP432	1338-101
COP434	1338-102
COP438	1338-103
COP440	1338-76
	1259-32
COP440R	1338-49
	1338-91
	1261-1

¶ Indicates page number in Application Note Directory.
★ Indicates additional data is provided on the page noted.

IC MASTER

National Semiconductor (Cont'd)

Device	Page-Line
COP441	1338-77
	1261-2
COP442	1338-78
	1261-3
COP444C	★ **1527**
	1261-4
COP444L	★ **1527**
	1338-79
	★ **1527**
	1261-5
COP444LR	★ **1527**
	1338-50
	1338-92
	★ **1527**
	1261-6
COP445C	★ **1527**
	1261-7
COP445L	★ **1527**
	1338-80
	★ **1527**
	1261-8
COP452	1338-87
COP470	579-109
	2663-9
	1338-96
COP472	1338-88
COP494	★ **4067**
	3758-1
	★ **4067**
	1338-104
COP495	★ **4068**
	3758-22
COP498	587-167
	1338-94
COP499	1338-98
DAC0800	2640-23
DAC0800C	2640-38
DAC0801C	2642-29
DAC0802	2639-18
DAC0802C	2639-19
DAC0806C	2642-49
DAC0807C	2642-41
DAC0808	2640-48
DAC0808C	2640-49
DAC0830	2639-3
DAC0831	2639-48
DAC0832	2641-31
DAC1000	2644-32
DAC1000C	2644-33
DAC1001	2646-9
DAC1001C	2646-10
DAC1002	2646-43
DAC1002C	2646-44
DAC1006	2644-34
DAC1006C	2644-35
DAC1007	2646-11
DAC1007C	2646-12
DAC1008	2646-45
DAC1008C	2646-46
DAC1020	2645-23
DAC1020C	2645-24
DAC1021	2646-29
DAC1021C	2646-30
DAC1022	2647-9
DAC1022C	2647-10
DAC1208	2651-8
DAC1209	2653-51
DAC1210	2655-37
DAC1218	2651-9
DAC1219	2654-1
DAC1220	2655-25
DAC1220C	2655-26
DAC1221	2656-14
DAC1221C	2656-15
DAC1222	2656-27
DAC1222C	2656-28
DAC1230	2651-10
DAC1231	2654-2
DAC1232	2655-38
DAC1265A	2648-5
DAC1265AC	2648-6
DAC1265L	2649-36
DAC1265LC	2649-37
DAC1266A	2648-3
DAC1266AC	2648-4
DAC1266L	2649-34
DAC1266LC	2649-35
DB16000	1965-25
DH0006	2683-124
DH0006C	2683-125
DH0008	2683-126
DH0011	2683-127
DH0017C	2683-128
DH0018C	2683-129
DH0028C	2680-61
DH0034	636-123
DH0034C	636-124
DH0035	641-100
	¶ 291-13
	3235-127
	¶ 291-13
DH0035C	641-101
	¶ 291-13
	3235-128
	¶ 291-13
DH0069	2683-110
DH3467C	3157-166
DH3725C	3157-154
DH6376C	3157-155
DM100422	3772-81
DM10105	597-60
DM10116	598-146
DM10414	598-24
	3772-16
DM10414A	3772-10
DM10415	598-45
	3774-46
DM10415A	3774-28
DM10422	598-34
	3772-85
DM10422A	3772-75
DM10470	598-60
	3779-50
DM10470A	598-61
	3779-38
DM10470L	598-62
	3779-51
DM10474	3775-73
DM10474A	3775-65
DM2502C	639-18
DM2502M	639-19
DM2503C	639-20
DM2503M	639-21
DM2504C	639-127
DM2504M	639-128
DM5400	621-155
DM5401	621-85
DM5402	624-48
DM5403	621-86
DM5404	607-46
DM5405	606-123
DM5406	614-74
DM5407	614-51
DM5408	619-85
DM5409	619-48
DM5410	620-128
DM54107	617-107
DM54109	617-44
DM5411	618-178
DM54121	630-101
DM54123	630-164
DM54125	605-164
DM54132	638-21
DM5414	638-56
DM54141	2662-91
DM54145	612-53
DM54147	639-113
DM54148	639-32
DM54150	630-80
DM54151A	629-151
DM54153	628-34
DM54154	613-114
DM54155	613-16
DM54156	612-167
DM54157	629-6
DM5416	614-62
DM54160A	610-29
DM54161A	607-189
DM54162A	610-76
DM54163	608-47
DM54164	632-25
	3790-91
DM54165	632-80
	3790-30
DM54166	632-100
	3790-43
DM5417	614-41
DM54170	3770-31
DM54173	615-124
DM54174	615-152
DM54175	615-42
DM54176	609-178
DM54177	607-131
DM54180	639-71
DM54181	604-22
DM54182	604-78
DM54184	637-101
DM54185A	637-93
DM54190	611-75
DM54191	609-34
DM54192	611-37
DM54193	609-85
DM54194	631-154
	3788-77
DM54195	631-49
	3788-127
DM54196	609-179
DM54197	607-132
DM54198	632-59
	3789-115
DM54199	632-67
	3789-116
DM5420	620-42
DM5423	623-148
DM5425	623-138
DM54251	630-32
DM54259	626-15
DM5426	613-167
DM5427	623-177
DM54284	604-122
DM5430	622-25
DM5432	623-81
DM54365	606-24
DM54366	606-166
	614-88
DM54367	606-25
	614-89
DM54368	606-167
DM5437	621-41
DM5438	620-185
DM5440	619-152
DM5441A	2662-82
DM5442	612-78
DM5445	612-43
DM5446A	2662-26
	¶ 288-8
DM5447A	2662-2
	¶ 288-8
DM5448	2661-127
DM5450	622-101
DM5451	622-120
DM5453	623-35
DM5454	623-24
DM5460	622-162
DM5470	616-187
DM5472	617-11
DM5473	617-108
DM5474	614-157
DM5475	625-87
DM5476	617-161
DM5483	605-77
	¶ 250-7
DM5485	603-56
DM5486	624-160
DM5490	609-133
DM5491A	632-141
DM5492A	611-116
DM5493A	608-111
DM5495	631-89
	3788-78
DM5496	632-4
	3789-86
DM54ALS00	621-165
DM54ALS02	624-62
DM54ALS04	607-59
DM54ALS08	619-96
DM54ALS109	617-53
DM54ALS113	618-3
DM54ALS160	610-42
DM54ALS161	608-10
DM54ALS162	610-86
DM54ALS163	608-55
DM54ALS240	633-146
DM54ALS241	634-17
DM54ALS242	633-69
DM54ALS243	633-70
DM54ALS244	634-74
DM54ALS245	635-75
DM54ALS273	616-67
DM54ALS32	623-89
DM54ALS373	626-44
DM54ALS374	616-97
DM54ALS377	616-151
DM54ALS573	626-45
DM54ALS574	616-98
DM54ALS576	619-97
DM54ALS580	626-108
DM54ALS620	636-56
DM54ALS622	636-57
DM54ALS623	636-58
DM54ALS641	635-51
DM54ALS642	634-141
DM54ALS643	634-162
DM54ALS644	635-136
DM54ALS646	636-117
DM54ALS647	635-170
DM54ALS648	636-118
DM54ALS649	635-171
DM54ALS690	610-87
DM54ALS691	607-168
DM54ALS692	610-88
DM54ALS693	607-169
DM54ALS696	610-165
DM54ALS697	609-45
DM54ALS698	610-166
DM54ALS699	609-46
DM54ALS74	614-166
DM54ALS873	625-75
DM54ALS876	614-128
DM54ALS880	625-157
DM54H00	621-185
DM54H01	621-112
DM54H04	607-77
DM54H05	606-138
DM54H08	619-117
DM54H10	620-150
DM54H103	618-39
DM54H106	618-54
DM54H108	617-185
DM54H11	619-15
DM54H20	620-66
DM54H21	618-129
DM54H22	620-12
DM54H30	622-36
DM54H40	619-167
DM54H50	622-110
DM54H51	622-131
DM54H52	622-91
DM54H53	623-14
DM54H54	623-7
DM54H55	622-185
DM54H60	637-162
DM54H61	638-4
DM54H62	638-85
DM54H71	617-28
DM54H72	617-17
DM54H73	617-125
DM54H74	615-7
DM54H76	617-168
DM54H78	617-82
DM54L164A	3790-77
DM54L91	3790-111
DM54L95	3788-46
DM54LS00	621-196
DM54LS01	621-125
DM54LS02	624-92
DM54LS03	621-126
DM54LS04	607-87
DM54LS05	606-148
DM54LS08	619-125
DM54LS09	619-65
DM54LS10	620-160
DM54LS107A	617-139
DM54LS109	617-70
DM54LS11	619-24
DM54LS112	618-64
DM54LS113A	618-19
DM54LS114A	618-95
DM54LS12	620-114
DM54LS122	630-132
DM54LS123	630-175
DM54LS125A	606-5
DM54LS126	605-153
DM54LS13	637-147
DM54LS132	638-36
DM54LS136	624-140
DM54LS138	613-63
DM54LS139	612-143
DM54LS14	638-71
DM54LS15	618-160
DM54LS151	629-174
DM54LS153	628-58
DM54LS154	613-125
DM54LS155	613-26
DM54LS156	612-178
DM54LS157	629-37
DM54LS158	628-145
DM54LS160A	610-58
DM54LS161A	608-26
DM54LS162	610-106
DM54LS163A	608-72
DM54LS164	632-46
	3790-92
DM54LS166	632-111
DM54LS168A	611-15
DM54LS169A	609-13
DM54LS170	627-19
	3770-32
DM54LS173	615-138
DM54LS174	615-176
DM54LS175	615-63
DM54LS190	611-97
DM54LS191	609-61
DM54LS192	611-62
DM54LS193	609-108
DM54LS194A	631-174
DM54LS195A	631-67
DM54LS196	610-8
DM54LS197	607-153
DM54LS20	620-77
DM54LS21	618-139
DM54LS22	620-22
DM54LS221	630-149
DM54LS240	633-176
DM54LS241	634-51
DM54LS242	633-110
DM54LS243	633-111
DM54LS244	634-52
DM54LS245	635-120
DM54LS247	2662-3
DM54LS248	2661-128
DM54LS249	2661-98
DM54LS251	630-53
DM54LS253	628-9
DM54LS257B	628-179
DM54LS258B	628-106
DM54LS259	626-32
DM54LS26	621-25
DM54LS266	625-38
DM54LS27	624-12
DM54LS279	625-143
DM54LS283	605-101
DM54LS290	609-151
DM54LS293	608-131
DM54LS298	629-97
DM54LS30	622-47
DM54LS32	623-111
DM54LS352	627-155
DM54LS353	627-121
DM54LS365A	606-64
DM54LS366A	607-17
DM54LS367A	606-65
DM54LS368A	607-18
DM54LS37	621-60
DM54LS373	626-75
DM54LS374	616-132
DM54LS377	625-121
DM54LS38	621-9
DM54LS386	624-190
DM54LS390	610-137
DM54LS393	608-90
DM54LS40	619-177
DM54LS42	612-98
DM54LS47	2662-4
DM54LS471	★ **4057**
	3761-15
DM54LS48	2661-129
DM54LS49	2661-99
DM54LS51	622-140
DM54LS54	623-44
DM54LS55	622-176
DM54LS670	627-33
	3770-48
DM54LS73A	617-140
DM54LS74	615-18
DM54LS75	625-104
DM54LS76	617-176
DM54LS78	617-90
DM54LS83A	605-102
DM54LS85	603-57
DM54LS86	625-1
DM54LS90	609-152
DM54LS92	611-128
DM54LS93	608-132
DM54S00	622-11
DM54S02	624-110
DM54S03	621-142
DM54S04	607-99
DM54S05	606-160
DM54S08	619-136
DM54S09	619-76
DM54S10	620-172
DM54S11	619-36
DM54S112	618-74
DM54S113	618-31
DM54S114	618-106
DM54S133	622-83
DM54S134	622-65
DM54S135	624-123
DM54S136	624-149
DM54S138	613-75
DM54S139	612-155
DM54S140	613-136
DM54S15	618-171
DM54S151	629-188
DM54S153	628-69
DM54S157	629-49
DM54S158	628-157
DM54S162	610-119
DM54S174	615-188
DM54S175	615-75
DM54S188	★ **4057**
	3760-34
DM54S189	3771-2
DM54S189A	3770-94
DM54S194	631-183
DM54S195	631-75
DM54S196	610-15
DM54S20	620-89
DM54S22	620-32
DM54S240	2670-1
DM54S241	2669-30
DM54S242	633-122
DM54S243	633-123
DM54S251	630-63
DM54S253	628-20
DM54S257	628-190
DM54S258	628-119
DM54S280	639-101
DM54S287	★ **4057**
	3760-108
DM54S288	★ **4057**
	3760-35
DM54S289	3770-124
DM54S299	633-15
DM54S30	622-58
DM54S32	623-122
DM54S373	626-92
DM54S374	616-143
DM54S387	★ **4057**
	3760-103
DM54S40	619-189
DM54S472	★ **4057**
	3762-4
DM54S472A	★ **4057**
	3762-5
DM54S472B	★ **4057**
	3762-6
DM54S473	★ **4057**
	3762-17
DM54S473A	★ **4057**
	3761-128
DM54S474	★ **4057**
	3762-38
DM54S474A	★ **4057**
	3762-7
DM54S474B	★ **4057**
	3762-8
DM54S475	★ **4057**
	3762-19
DM54S475A	★ **4057**
	3762-2
DM54S51	622-152
DM54S570	★ **4057**
	3761-57
DM54S570A	★ **4057**
	3761-58
DM54S571	★ **4057**
	3761-59
DM54S571A	★ **4057**
	3761-60
DM54S571B	★ **4057**
	3761-61
DM54S572	★ **4057**
	3763-7
DM54S572A	★ **4057**
	3762-66

Arranged alphanumerically from left to right.

© IC MASTER 1984

National Semiconductor (Cont'd)

Device	Page-Line
DM54S573	★ 4057
	3763-10
DM54S573A	★ 4057
	3762-67
DM54S573B	★ 4057
	3762-97
DM54S64	623-62
DM54S65	623-71
DM7090	625-51
DM7091	621-42
DM7092	620-95
DM7093	605-165
	¶ 258-15
DM7094	605-140
DM7095	606-26
DM7096	606-168
DM7097	606-27
DM7098	606-169
DM7099	621-33
DM7121	630-3
DM7123	629-59
DM7130	603-147
DM7131	603-84
DM7136	603-86
DM7160	603-78
DM71LS95	606-107
DM71LS97	606-108
DM71S96	607-120
DM71S98	607-121
DM7200	603-38
DM7210	630-7
	¶ 257-11
DM7211	630-8
DM7214	627-163
	¶ 258-15
DM7219	630-90
DM7220	639-108
DM7223	613-39
DM7230	612-4
	¶ 258-15
DM7280	609-180
DM7281	607-133
DM7288	611-108
DM7290	609-181
DM7291	607-134
DM7400	621-156
	¶ 287-6
DM7401	621-87
DM7402	624-49
DM7403	621-88
DM7404	607-47
DM7405	606-124
DM7406	614-75
DM7407	614-52
DM7408	619-86
DM7409	619-49
DM7410	620-129
DM74107	617-109
DM74109	617-45
DM7411	618-179
DM74121	630-102
DM74123	630-165
DM74125	605-166
DM7413	637-133
DM74132	638-22
DM7414	638-57
DM74141	2662-92
DM74145	612-54
DM74147	639-114
DM74148	639-33
DM74150	630-81
DM74151A	629-152
DM74153	628-35
DM74154	613-115
DM74155	613-17
DM74156	612-168
DM74157	629-7
DM7416	614-63
DM74160A	610-30
DM74161A	607-190
DM74162A	610-77
DM74163	608-48
DM74164	632-26
	3790-93
DM74165	632-81
	3790-31
DM74166	632-101
	3790-44
DM7417	614-42
DM74170	627-9
	3770-33
DM74173	615-125
DM74174	615-153
DM74175	615-43
DM74176	609-182
DM74177	607-135
DM74180	639-72
DM74182	604-79
DM74184	637-102
DM74185A	637-94
DM74190	611-76
DM74191	609-35
DM74192	611-38
DM74193	609-86
DM74194	631-155
	3788-79
DM74195	631-50
	3788-128
DM74196	609-183
DM74197	607-136
DM74198	632-60
	3789-117
DM74199	632-68
	3789-118
DM7420	620-43
DM7423	623-149
DM7425	623-139
DM74251	630-33
DM74259	626-16
DM7426	613-168
DM7427	623-178
DM7430	622-26
DM7432	623-82
DM74365	606-170
DM74366	606-28
	614-90
DM74367	606-29
	614-91
DM74368	606-171
DM7437	621-43
DM7438	620-186
DM7440	619-153
DM7441A	2662-83
DM7442	612-79
DM7445	612-44
DM7446A	2662-27
	¶ 288-8
DM7447A	2662-5
	¶ 288-8
DM7448	2661-130
DM7450	622-102
DM7451	622-121
DM7453	623-36
DM7454	623-25
DM7460	622-163
DM7470	616-188
DM7472	617-12
DM7473	617-110
DM7474	614-158
DM7475	625-88
DM7476	617-162
DM7483	605-78
	¶ 250-7
DM7485	603-58
DM7486	624-161
DM7489B	627-58
DM7490	609-134
	¶ 258-15
DM7491A	632-142
DM7492A	611-117
DM7493A	608-112
DM7495	631-90
	3788-80
DM7496	632-5
	3789-87
DM74ALS00	621-166
DM74ALS02	624-63
DM74ALS04	607-60
DM74ALS08	619-98
DM74ALS109	617-54
DM74ALS160	610-43
DM74ALS161	608-11
DM74ALS162	610-89
DM74ALS163	608-56
DM74ALS240	633-147
DM74ALS241	634-18
DM74ALS242	633-71
DM74ALS243	633-72
DM74ALS244	634-19
DM74ALS245	635-76
DM74ALS273	616-68
DM74ALS32	623-90
DM74ALS373	626-46
DM74ALS374	616-99
DM74ALS377	616-152
DM74ALS573	626-47
DM74ALS574	616-100
DM74ALS576	619-99
DM74ALS580	626-109
DM74ALS620	636-59
DM74ALS622	636-60
DM74ALS623	636-61
DM74ALS640	634-163
DM74ALS641	635-52
DM74ALS642	634-142
DM74ALS643	634-164
DM74ALS644	635-137
DM74ALS646	636-119
DM74ALS647	635-172
DM74ALS648	636-120
DM74ALS649	635-173
DM74ALS690	610-90
DM74ALS691	607-170
DM74ALS692	610-91
DM74ALS693	607-171
DM74ALS696	610-167
DM74ALS697	609-47
DM74ALS698	610-168
DM74ALS699	609-48
DM74ALS74	614-167
DM74ALS873	625-76
DM74ALS874	614-129
DM74ALS876	614-130
DM74ALS880	625-158
DM74H00	621-186
DM74H01	621-113
DM74H04	607-78
DM74H05	606-139
DM74H08	619-118
DM74H10	620-151
DM74H103	618-40
DM74H106	618-55
DM74H108	617-186
DM74H11	619-16
DM74H20	620-67
DM74H21	618-130
DM74H22	620-13
DM74H30	622-37
DM74H40	619-168
DM74H50	622-111
DM74H51	622-132
DM74H52	622-92
DM74H53	623-15
DM74H54	623-8
DM74H55	622-186
DM74H60	637-163
DM74H61	638-5
DM74H62	638-86
DM74H71	617-29
DM74H72	617-18
DM74H73	617-126
DM74H74	615-8
DM74H76	617-169
DM74H78	617-83
DM74L164A	3790-78
DM74L91	3790-112
DM74L95	3788-47
DM74LS00	621-197
DM74LS01	621-127
DM74LS02	624-93
DM74LS03	621-128
DM74LS04	607-88
DM74LS05	606-149
DM74LS08	619-126
DM74LS09	619-66
DM74LS10	620-161
DM74LS107A	617-141
DM74LS109	617-71
DM74LS11	619-25
DM74LS112	618-65
DM74LS113A	618-20
DM74LS114A	618-96
DM74LS12	620-115
DM74LS122	630-133
DM74LS123	630-176
DM74LS125A	606-6
DM74LS126	605-154
DM74LS13	637-148
DM74LS132	638-37
DM74LS136	624-141
DM74LS138	613-64
	1345-112
DM74LS139	612-144
DM74LS14	638-72
DM74LS15	618-161
DM74LS151	629-175
DM74LS153	628-59
DM74LS154	613-126
DM74LS155	613-27
DM74LS156	612-179
DM74LS157	629-38
DM74LS158	628-146
DM74LS160A	610-59
DM74LS161A	608-27
DM74LS162	610-107
DM74LS163A	608-73
DM74LS164	632-47
	3790-94
DM74LS166	632-112
DM74LS168A	611-16
DM74LS169A	609-14
DM74LS170	627-20
	3770-34
DM74LS173	615-139
DM74LS174	615-177
DM74LS175	615-64
	1348-3
DM74LS190	611-98
DM74LS191	609-62
DM74LS192	611-63
DM74LS193	609-109
DM74LS194A	631-175
DM74LS195A	631-68
DM74LS196	610-9
DM74LS197	607-154
DM74LS20	620-78
DM74LS21	618-140
DM74LS22	620-23
DM74LS221	630-150
DM74LS240	633-177
DM74LS241	634-53
	2669-31
DM74LS242	633-112
	2675-58
DM74LS243	633-113
	2675-59
DM74LS244	634-54
	2669-32
DM74LS245	635-121
	2678-21
DM74LS247	2662-6
DM74LS248	2661-131
DM74LS249	2661-100
DM74LS251	630-54
DM74LS253	628-10
DM74LS257B	628-180
DM74LS258B	628-107
DM74LS259	626-33
DM74LS26	621-26
DM74LS266	625-39
DM74LS27	624-13
DM74LS279	625-144
DM74LS283	605-103
DM74LS290	609-153
DM74LS293	608-133
DM74LS298	629-98
DM74LS30	622-48
DM74LS32	623-112
DM74LS352	627-156
DM74LS353	627-122
DM74LS365A	606-66
DM74LS366A	607-19
DM74LS367A	606-67
DM74LS368A	607-20
DM74LS37	621-61
DM74LS373	626-76
DM74LS374	616-133
DM74LS38	621-10
DM74LS386	624-162
DM74LS390	610-138
DM74LS393	608-91
DM74LS40	619-178
DM74LS42	612-99
DM74LS47	2662-7
DM74LS471	★ 4057
	3761-10
DM74LS48	2661-132
DM74LS49	2661-101
DM74LS51	622-141
DM74LS54	623-45
DM74LS55	622-177
DM74LS62	626-157
DM74LS670	627-34
	3770-49
DM74LS73A	617-142
DM74LS74	615-19
DM74LS75	625-105
DM74LS76	617-177
DM74LS77	625-122
DM74LS78	617-91
DM74LS83A	605-104
DM74LS85	603-59
DM74LS86	625-2
DM74LS90	609-154
DM74LS92	611-129
DM74LS93	608-134
DM74S00	622-12
DM74S02	624-111
DM74S03	621-143
DM74S04	607-100
DM74S05	606-161
DM74S08	619-137
DM74S09	619-67
DM74S10	620-173
DM74S11	619-37
DM74S112	618-75
DM74S113	618-32
DM74S114	618-107
DM74S133	622-84
DM74S134	622-66
DM74S135	624-124
DM74S136	624-150
DM74S138	613-76
DM74S139	612-156
DM74S140	613-137
	2670-42
DM74S15	618-172
DM74S151	629-189
DM74S153	628-70
DM74S157	629-50
DM74S158	628-158
DM74S162	610-120
DM74S174	615-189
DM74S175	615-76
DM74S182	604-102
	¶ 273-7
DM74S188	★ 4057
	3760-26
DM74S189	627-75
	3770-110
DM74S189A	3770-87
DM74S194	631-184
DM74S195	631-76
DM74S196	610-16
DM74S20	620-90
DM74S200	627-98
	3772-32
DM74S206	3772-40
DM74S22	620-33
DM74S240	2670-2
DM74S241	2669-33
DM74S242	633-124
DM74S243	633-125
DM74S251	630-64
DM74S253	628-21
DM74S257	628-191
DM74S258	628-120
DM74S260	623-166
DM74S280	639-102
DM74S281	605-42
DM74S287	★ 4057
	3760-89
	¶ 320-2
DM74S288	★ 4057
	3760-29
DM74S289	627-62
	3770-102
DM74S299	633-16
DM74S30	622-59
DM74S32	623-123
DM74S373	626-93
DM74S374	616-144
DM74S387	★ 4057
	3760-86
DM74S40	619-190
DM74S472	★ 4057
	3762-9
DM74S472A	★ 4057
	3761-112
DM74S472B	★ 4057
	3761-113
	3762-63
DM74S473	★ 4057
	3761-129
DM74S473A	★ 4057
	3761-105
DM74S474	★ 4057
	3762-24
DM74S474A	★ 4057
	3761-117
DM74S475	★ 4057
	3762-20
DM74S475A	★ 4057
	3761-108
DM74S51	622-153
DM74S570	★ 4057
	3761-42
DM74S570A	★ 4057
	3761-43
DM74S571	★ 4057
	3761-45
DM74S571A	★ 4057
	3761-46
DM74S571B	★ 4057
	3761-47
DM74S572	★ 4057
	3762-113
DM74S572A	★ 4057
	3762-85
DM74S573	★ 4057
	3762-118
DM74S573A	★ 4057
	3762-90
DM74S573B	★ 4057
	3762-74
DM74S64	623-63
DM74S65	623-72
DM74S74	615-30
DM74S86	625-16
DM7511	614-147
DM7512	617-40
DM7542	615-81
DM7544	636-140
DM7546	632-159
	3789-107
DM7551	615-126
	¶ 258-15
DM7552	611-164
DM7553	626-142
DM7554	611-149
DM7555	610-19
DM7556	607-176
DM7560	611-39
DM7563	609-87
DM7570	632-27
	3790-95
DM7575	4484-36
DM7576	4484-37
DM7589	627-59
	3771-39
DM7590	3790-25
DM7599	627-67
	3771-38
DM75S06	3760-12
DM75S07	3760-13
DM75S07A	3760-9
DM75S28	3783-42
DM75S29	3783-41
DM75S50	611-170
DM7613	614-148
DM76LS52	626-158
DM76S128	3755-1
DM76S64	3755-2
DM77LS181	★ 4057
	3763-109
DM77S180	★ 4057
	3763-83
DM77S181	★ 4057
	3763-86
DM77S181A	★ 4057
	3762-122
DM77S184	★ 4057
	3764-51
DM77S185	★ 4057
	3764-56
DM77S185A	★ 4057
	3764-43
DM77S185B	★ 4057
	3764-30
DM77S188	3760-16
DM77S190	★ 4057
	3765-34
DM77S191	★ 4057
	3765-37
DM77S191A	★ 4057
	3765-16
DM77S191B	★ 4057
	3764-127

¶ Indicates page number in Application Note Directory.
★ Indicates additional data is provided on the page noted.

IC MASTER

Device	Page-Line
National Semiconductor (Cont'd)	
DM77S195A	★ **4057**
	★ **4057**
	3765-113
DM77S195B	★ **4057**
	3765-108
DM77S280	★ **4057**
	3763-84
DM77S281	★ **4057**
	3763-87
DM77S288	3760-17
DM77S290	★ **4057**
	3765-35
DM77S291	★ **4057**
	3765-38
DM77S291A	★ **4057**
	3765-17
DM77S291B	★ **4057**
	3764-128
DM77S321	★ **4057**
	3766-10
DM77S401	3757-44
DM77S401A	3757-52
DM77S402	3757-57
DM77S402A	3757-61
DM77S421	★ **4057**
	3766-11
DM77SR181	★ **4057**
	3763-35
DM77SR25	★ **4057**
	3761-101
DM77SR474	★ **4057**
	3762-64
DM77SR476	★ **4057**
	3761-102
DM7853	630-138
DM7875	605-5
DM8090	625-52
DM8091	621-44
DM8092	620-96
DM8093	605-167
	¶ 259-6
DM8094	605-141
	¶ 259-6
DM8095	606-30
DM8096	606-172
DM8097	606-31
DM8098	606-173
DM8099	621-34
DM8121	630-4
DM8123	629-60
DM8130	603-148
DM8131	603-85
DM8136	603-87
DM8160	603-79
DM81LS95	606-109
DM81LS96	607-112
DM81LS97	606-110
DM81LS98	607-113
DM8200	603-39
DM8210	630-9
	¶ 257-11
DM8211	630-10
DM8214	627-164
	¶ 259-6
DM8219	630-91
DM8220	639-109
DM8223	613-40
DM8230	612-5
	¶ 259-6
DM8280	609-184
DM8281	607-137
DM8288	611-109
DM8290	609-185
DM8291	607-138
DM8300	631-51
	3789-1
DM8301	612-80
DM8309	627-133
DM8310	610-31
DM8311	613-116
DM8312	629-129
DM8316	607-191
DM8318	639-34
DM8322	629-8
DM8334	626-17
DM8511	614-149
DM8512	617-41
DM8542	615-82
DM8544	636-141
DM8546	632-160
	3789-108
DM8551	615-127
	¶ 259-5
	¶ 259-6
DM8552	611-165
	¶ 259-6
DM8553	626-143
DM8554	611-150
DM8555	610-20
DM8556	607-177
	¶ 259-4
DM8560	611-40
DM8563	609-88
DM8570	632-28
	3790-96
DM8575	4484-38
	¶ 257-13
DM8576	4484-39
	¶ 257-13
DM8576AAA	3756-7
	¶ 257-13
DM8589	627-60
	3771-22
DM8590	3790-26
DM8599	627-68
	3771-3
DM85S06	3760-10
DM85S07	3760-11
DM85S47A	3760-8
DM85S68	627-80
	¶ 273-11
	3770-113
	¶ 273-11
DM8601	630-111
DM8602	631-9
DM8613	614-150
DM8678	3755-3
	¶ 317-4
	¶ 317-6
	¶ 317-7
DM86LS52	626-159
DM86LS62	626-160
DM86S128	3755-4
DM86S64	3755-30
DM87LS181	★ **4057**
	3763-108
DM87S180	★ **4057**
	3763-51
DM87S181	★ **4057**
	3763-79
DM87S181A	★ **4057**
	3762-91
DM87S184	★ **4057**
	3764-33
DM87S185	★ **4057**
	3764-39
DM87S185A	★ **4057**
	3764-23
DM87S185B	★ **4057**
	3764-12
DM87S188	3760-14
DM87S190	★ **4057**
	3765-19
DM87S191	★ **4057**
	3765-25
DM87S191A	★ **4057**
	3764-106
DM87S191B	★ **4057**
	3764-91
DM87S195A	3765-98
DM87S195B	3765-94
DM87S280	★ **4057**
	3763-52
DM87S281	★ **4057**
	3763-57
DM87S288	3760-15
DM87S290	★ **4057**
	3765-20
DM87S291	★ **4057**
	3765-26
DM87S291A	★ **4057**
	3764-107
DM87S291B	★ **4057**
	3764-92
DM87S321	★ **4057**
	3766-5
DM87S401	3757-45
DM87S401A	3757-53
DM87S402	3757-58
DM87S402A	3757-62
DM87S421	★ **4057**
	3766-6
DM87SR181	★ **4057**
	3763-36
DM87SR25	★ **4057**
	3761-95
DM87SR474	★ **4057**
	3761-96
DM87SR476	★ **4057**
	3761-97
DM8853	630-139
DM8875	605-6
DM8898	637-98
DM8899	637-95
DM9002C	621-157
DM9003C	620-130
DM9004C	620-44
DM9005C	622-103
DM9006C	622-167
DM9008C	623-11
DM9009C	619-154
DM9012C	621-89
DM9016C	607-48
DM9300	631-52
	3789-2
DM9301	612-81
DM9309	627-134
DM9310	610-32
DM9311	613-117
DM9312	629-130
DM9316	607-192
DM9318	639-35
DM9322	629-9
DM9334	626-18
DM9601	630-112
DM9602	631-10
DMPAL10H8AC	4480-41
DMPAL10H8AM	4480-74
DMPAL10H8C	4481-18
DMPAL10H8M	4481-94
DMPAL10L8AC	4480-42
DMPAL10L8AM	4480-75
DMPAL10L8C	4481-19
DMPAL10L8M	4481-95
DMPAL12H6AC	4480-43
DMPAL12H6AM	4480-76
DMPAL12H6C	4481-20
DMPAL12H6M	4481-96
DMPAL12L10C	4481-60
DMPAL12L10M	4481-61
DMPAL12L6AC	4480-44
DMPAL12L6AM	4480-77
DMPAL12L6C	4481-21
DMPAL12L6M	4481-97
DMPAL14H4AC	4480-45
DMPAL14H4AM	4480-78
DMPAL14H4C	4481-22
DMPAL14H4M	4481-98
DMPAL14L4AM	4480-79
DMPAL14L4C	4481-23
DMPAL14L4M	4481-99
DMPAL14L8C	4481-62
DMPAL14L8M	4481-63
DMPAL16A4M	637-8
DMPAL16C1AC	4480-46
DMPAL16C1AM	4480-80
DMPAL16C1C	4481-24
DMPAL16C1M	4481-100
DMPAL16H2AC	4480-47
DMPAL16H2AM	4480-81
DMPAL16H2C	4481-25
DMPAL16H2M	4481-101
DMPAL16L2AC	4480-48
DMPAL16L2AM	4480-82
DMPAL16L2C	4481-26
DMPAL16L2M	4481-102
DMPAL16L6C	4481-64
DMPAL16L6M	4481-65
DMPAL16L8AC	4480-49
DMPAL16L8AM	4480-83
DMPAL16L8C	4481-27
DMPAL16L8M	4481-103
DMPAL16R4AC	4480-50
DMPAL16R4AM	4480-84
DMPAL16R4C	4481-28
DMPAL16R4M	4481-104
DMPAL16R6AC	4480-51
DMPAL16R6AM	4480-85
DMPAL16R6C	4481-29
DMPAL16R6M	4481-105
DMPAL16R8AC	4480-52
DMPAL16R8AM	4480-86
DMPAL16R8C	4481-30
DMPAL16R8M	4481-106
DMPAL18L4C	4481-66
DMPAL18L4M	4481-67
DMPAL209X4C	4481-119
DMPAL20C1C	4481-68
DMPAL20C1M	4481-69
DMPAL20L10C	4481-120
DMPAL20L10M	4482-6
DMPAL20L2C	4481-70
DMPAL20L2M	4481-71
DMPAL20X10C	4481-121
DMPAL20X10M	4482-7
DMPAL20X4M	4482-8
DMPAL20X8C	4481-122
DMPAL20X8M	4482-9
DMPL14L4AC	4480-53
DP3216	1345-66
DP3226	1345-67
DP7303	2677-27
DP7304	1345-68
DP7304B	2677-28
DP7307	2677-29
DP7308	2677-30
DP7310	2683-111
DP7311	2683-112
DP8212	1345-145
	1348-4
	¶ 274-15
DP8212M	1345-146
	¶ 274-15
DP8216	1345-69
	¶ 274-15
DP8216M	1345-70
	¶ 274-15
DP8224	1345-89
	¶ 274-15
DP8226	1345-71
	¶ 274-15
DP8226M	1345-72
	¶ 274-15
DP8228	1346-77
	¶ 274-15
DP8228M	1346-78
	¶ 274-15
DP8238	1346-79
	¶ 274-15
DP8238M	1346-80
	¶ 274-15
DP8250	1345-50
DP8303	2677-31
DP8304	2677-7
	1345-73
DP8304B	2677-32
DP8307	2677-33
DP8308	2677-34
DP8310	2683-113
DP8311	2683-114
DP8340	2686-44
DP8341	2686-29
DP8342	2686-45
DP8343	2686-28
DP8350	★ **1514**
	1345-97
	1352-102
	¶ 260-3
	¶ 261-11
	¶ 262-15
DP8352	1345-98
DP8353	1345-99
DP8356	1346-56
DP8392	★ **1514**
	1352-65
	1354-6
DP8400	★ **1514**
	2666-4
DP8402	637-59
DP8408	★ **1514**
	2680-115
	2680-123
DP8409	★ **1514**
	2680-119
DP84240	2683-115
DP84244	2683-116
DP84300	2680-55
DP84312	2680-52
	1352-1
DP84322	2680-53
	1352-2
DP84332	2680-54
	1347-46
DP8460	★ **1514**
	2679-40
	2680-91
	★ **1514**
	1353-133
DP8463	2679-39
DP8464	★ **1514**
	2679-38
	★ **1514**
	1354-1
DP8466	2679-37
DS0025	2681-45
	¶ 319-3
DS0025C	2681-46
	¶ 319-3
DS0026	2681-47
	¶ 319-3
DS0026C	2681-48
	¶ 319-3
DS0056	2681-49
DS0056C	2681-50
DS1488	2668-52
	¶ 285-14
DS1489	2672-29
	¶ 285-14
DS1489A	2672-38
	¶ 285-14
DS1603	2673-37
	2684-55
DS1611	2681-110
DS1612	2681-149
DS1613	2682-53
DS1614	2682-19
DS16147	2682-148
DS16149	614-80
	2683-82
DS16177	2682-149
DS16179	614-81
	2683-83
DS1628	2683-117
DS1630	572-55
DS1631	2681-106
DS1632	2681-143
DS1633	2682-49
DS1634	2682-15
DS1640	2683-14
DS1642	2681-57
DS1644	2683-7
DS1645	2683-94
DS1646	2683-130
DS1647	2682-150
DS1648	2682-156
DS1649	2683-90
DS1650	2674-17
DS1651	2684-63
DS1652	2674-20
DS1653	2684-64
DS1670	2683-15
DS1671	2681-58
DS1672	2681-59
DS1674	2683-8
DS1675	2683-95
DS1676	2683-131
DS1677	2682-151
DS1678	2682-157
DS1679	2683-91
DS1686	2680-146
	3218-49
DS1687	2680-147
	3218-50
DS1688	2671-30
DS1689	2674-34
DS1690	2674-35
DS1691	2668-44
DS1692	2671-32
DS26LS31C	2671-39
DS26LS31M	2671-40
DS26LS32C	2674-27
DS26LS32M	2674-28
DS26LS33C	2674-40
DS26LS33M	2674-41
DS26S10C	638-125
	2676-58
DS26S10M	638-126
	2676-49
DS26S11C	638-127
	2676-59
DS26S11M	638-128
	2676-50
DS3245	2682-146
DS3486	2674-23
DS3487	2671-28
DS3603	2673-38
	2684-56
DS3604	2673-18
	2684-54
DS3605	2684-67
DS3606	2684-68
DS3607	2684-69
DS3608	2684-70
DS3611	2681-111
DS3612	2681-150
DS3613	2682-54
DS3614	2682-20
DS36143	2682-147
DS36144	2683-9
DS36147	2682-152
DS36149	614-82
	2683-84
DS3615	2679-22
DS3616	2679-14
DS3617	2679-27
DS36177	2682-153
DS36179	614-83
	2683-85
DS3618	2679-23
DS3628	2683-118
DS3629	2680-70
DS3630	572-56
DS3631	2681-107
DS3632	2681-144
DS3633	2682-50
DS3634	2682-16
DS3644	2683-10
DS3645	2683-96
DS3647	2682-154
DS3648	2682-158
DS3649	2683-92
DS3650	2674-18
DS3651	2684-65
DS3652	2674-21
DS3653	2684-66
DS3654	2680-131
DS3656	2682-135
DS3658	2682-138
DS3662	2675-43
DS3666	2677-1
DS3667	2678-22
DS3668	2682-137
DS3669	2682-139
DS3671	2661-31
DS3674	2683-11
DS3675	2683-97
DS3677	2682-155
DS3678	2682-159
DS3679	2683-93
DS3680	2683-3
	3218-58
DS3686	2680-148
	3218-51
DS3687	2681-1
	3218-52
DS3689	2674-36
DS3690	2674-37
DS3691	2668-43
DS3692	2671-33
DS3695	2678-40
DS3696	2678-41
DS3697	2678-42
DS3698	2678-43
DS55107	2673-26
	2673-40
DS55108	2673-33
	2673-45
DS55113	2670-57
DS55114	2670-32
DS55115	2673-61
DS55121	2668-7
DS55122	2672-19
DS55325	2680-73
DS55450	2681-71
DS55451	2681-72
DS55452	2681-124
DS55453	2682-28
DS55454	2681-157
DS55461	2681-73
DS55462	2681-125
DS55463	2682-29
DS55464	2681-158
DS55493	2663-14
DS75107	2673-27
	2673-41
DS75108	2673-34
	2673-46

Arranged alphanumerically from left to right.

© IC MASTER 1984

National Semiconductor (Cont'd)

Device	Page-Line
DS75113	2670-58
DS75114	2670-33
DS75115	2673-62
DS75121	2668-8
DS75122	2672-20
DS75123	2668-2
DS75124	2672-14
DS75125	2673-3
DS75127	2673-4
DS75128	2673-9
DS75129	2673-10
DS75150	2668-20
DS75154	2672-56
DS75160A	2677-2
DS75161A	2677-3
DS75162A	2677-4
DS75207	2673-14
	2684-50
DS75208	2673-15
	2684-51
DS75325	2680-74
DS75361	2682-62
DS75362	2682-63
DS75365	2682-164
DS75450	2681-74
DS75451	2681-75
DS75452	2681-126
	¶ 287-6
DS75453	2682-30
DS75454	2681-159
DS75461	2681-76
DS75462	2681-127
DS75463	2682-31
DS75464	2681-160
DS75491	2663-15
	¶ 288-8
DS75492	2663-51
	¶ 288-8
DS75493	2663-16
DS75494	2663-52
DS7640	2672-44
DS7641	2675-44
DS7664	2664-3
DS7800	636-125
DS7803	2683-119
DS7807	2683-120
DS7810	613-169
DS7811	613-170
DS7812	614-64
DS7819	613-151
DS7820	2674-9
	¶ 285-14
	¶ 286-9
	¶ 287-6
DS7820A	2674-3
	¶ 285-14
	¶ 286-9
	¶ 287-6
DS7822	2672-11
DS7830	2670-43
	¶ 285-14
	¶ 286-9
	¶ 287-6
DS7831	2668-34
	2670-52
	¶ 258-15
	¶ 259-6
	¶ 285-14
DS7832	2668-27
	2670-55
	¶ 285-14
DS7833	2676-33
	¶ 285-14
DS7834	2676-28
	¶ 285-14
DS7835	2676-26
	¶ 285-14
DS7836	2672-42
	¶ 285-14
DS7837	2672-60
	¶ 285-14
DS7838	2676-25
	¶ 285-14
DS7839	2676-31
	¶ 285-14
DS7880	2663-76
DS7889	2663-126
DS78C120	2673-51
DS78C20	2674-10
DS78L12	636-130
DS78L20	2673-58
DS78LS120	2673-49
DS8614	641-3
DS8615	641-7
DS8616	641-9
DS8617	641-24
DS8621	641-21
	3214-69
	3215-80
DS8622	641-28
	3214-72
DS8626	641-8
	3214-64
DS8627	641-4
DS8628	640-119
DS8629	641-25
	3214-65
DS8640	2672-45
DS8641	2675-45
DS8646	2663-46
DS8647	2663-140
DS8648	2663-141
DS8654	2680-132
DS8656	2680-133
DS8664	2664-4
DS8665	2664-1
DS8666	2664-2
DS8669	2662-39
DS8692	2680-134
DS8693	2680-135
DS8694	2680-136
DS8800	636-126
DS8803	2683-121
DS8807	2683-122
DS8810	613-171
DS8811	613-172
DS8812	614-65
DS8819	613-152
DS8820	2674-11
	¶ 285-14
	¶ 286-9
	¶ 287-6
DS8820A	2674-4
	¶ 285-14
	¶ 286-9
	¶ 287-6
DS8822	2672-12
DS8830	2670-44
	¶ 285-14
	¶ 286-9
	¶ 287-6
DS8831	2668-35
	2670-53
	¶ 258-15
	¶ 259-6
	¶ 285-14
DS8832	2668-28
	2671-2
	¶ 285-14
DS8833	2676-34
	¶ 285-14
	1345-74
	¶ 285-14
DS8834	2676-29
	¶ 285-14
DS8835	2676-27
	¶ 285-14
	1345-75
	¶ 285-14
DS8836	2672-43
	¶ 285-14
DS8837	2672-62
	¶ 285-14
DS8838	2675-2
	¶ 285-14
DS8839	2676-32
	¶ 285-14
DS8856	2661-133
	¶ 288-8
DS8857	2662-71
	¶ 288-8
DS8858	2662-74
	¶ 288-8
DS8859	2662-98
DS8861	2663-32
	¶ 288-8
DS8863	2663-96
	¶ 288-8
DS8864	2663-136
	¶ 288-8
DS8867	2663-130
DS8869	2662-99
DS8870	2663-53
DS8871	2663-97
DS8872	2663-131
DS8873	2663-137
DS8874	2663-138
DS8877	2663-54
DS8880	2663-77
	¶ 288-7
DS8881	2664-6
DS8884A	2663-78
	¶ 288-7
DS8885	2663-72
	¶ 288-7
DS8887	2663-93
	¶ 288-7
DS8889	2663-127
	¶ 288-7
DS8891	2663-40
DS8897	2663-94
DS88C120	2673-52
DS88C20	2674-12
DS88L12	636-131
DS88LS120	2673-50
DS8906	3214-114
DS8907	3214-115
DS8908	3214-116
DS8920	2663-132
DS8963	2663-98
DS8973	2663-133
DS8975	2663-134
DS8980	2663-79
	¶ 288-7
DS8T26A	638-91
	2676-5
	1341-11
DS8T26AM	638-92
	2676-6
DS8T28	638-104
	2676-17
	1341-12
DS8T28M	638-105
	2676-18
DT1000	3169-92
DT1050	3169-103
DT1051	3169-84
DT1052	3169-101
DT1053	3169-104
DT1054	3169-85
DT1055	3169-102
DT1056	3169-105
DT1057	3169-106
Digitalker	1351-149
	1355-47
F29705M	3771-8
F0E380B-1	3233-82
F0E380B-2	3233-83
F0R100B	3233-86
F0R261F-1	3233-87
F0R261F-2	3233-88
F0R361B	3233-89
F0T180B	3233-94
HD6600	2662-124
	2683-34
HS2649	★ **4071**
	3769-121
IDM2901A-2	1336-53
	1257-11
IDM2901AC	1336-54
IDM2901AM	605-60
	1336-55
IDM2902C	1336-103
IDM2902M	1336-104
IDM2909AC	637-48
	1336-114
IDM2909AM	637-49
	1336-115
IDM2910A	1354-15
IDM2911AC	637-50
	1336-116
IDM2911AM	637-51
	1336-117
IDM29704C	627-63
IDM29704M	627-64
	3771-15
IDM29705	3771-9
IDM29705AC	627-76
	1337-1
IDM29705AM	627-77
	1337-2
IDM29705C	627-78
	3770-128
IDM29705M	627-79
IDM2970C	3771-6
IDM29803C	1337-51
IDM29803M	1337-52
IDM29811C	1336-126
IDM29811M	1336-127
IDM29901C	1337-19
IDM29901M	1337-20
IDM29902C	1336-128
IDM29902M	1336-129
IDM29903C	1337-53
IDM29908C	1337-13
IDM29908M	1337-14
INS1771	1348-134
	1353-99
	¶ 261-6
INS2651	1346-12
INS8035	1344-15
	1277-3
INS8035L	1344-16
	1277-4
INS8039	1344-17
	1277-5
INS8039L	1344-18
	1277-6
INS8040	1344-19
	1277-7
INS8040L	1344-20
	1277-8
INS8048	1344-55
	¶ 266-10
	1277-9
	¶ 266-10
INS8048L	1344-56
	¶ 266-10
	1277-10
	¶ 266-10
INS8049	1344-57
	1277-11
INS8049L	1344-58
	1277-12
INS8050	1344-59
	1277-13
INS8050L	1344-60
	1277-14
INS8060	1347-119
	¶ 260-15
	¶ 262-4
	1277-15
	¶ 260-15
	¶ 262-4
INS8073	1344-75
	1277-16
INS8080A	1345-33
	¶ 260-3
	¶ 274-15
	¶ 280-13
	¶ 320-12
	¶ 322-4
	1277-17
	¶ 260-3
	¶ 274-15
	¶ 280-13
	¶ 320-12
	¶ 322-4
INS8080A-1	1345-34
INS8080A-2	1345-35
INS8154	1346-57
	1348-2
INS8202	1345-82
INS8203	1345-83
INS8208	1345-76
INS8212	1345-147
	1348-5
INS8216	1345-77
INS8224	1345-90
INS8226	1345-78
INS8228	1346-81
INS8238	1346-82
INS8243	1344-104
INS8244	1345-159
INS8245	1345-160
INS8246	1345-161
INS8247	1345-115
INS8248	1345-116
INS8250	★ **1514**
	2686-61
	¶ 260-3
	★ **1514**
	1345-51
	¶ 260-3
INS8251	1346-13
	¶ 274-15
INS8253	1346-40
INS8253-5	1346-41
	1347-5
INS8254	1346-49
INS8255	1346-50
	1348-1
	¶ 274-15
INS8259	1346-35
INS82891	1353-119
INS82893	1353-120
INS8294	1345-45
INS82C06	1345-137
INS82LS05	1345-113
INS8708	3764-2
LF111	3159-58
LF11201	2616-75
LF11202	2616-76
LF11331	2616-77
LF11332	2616-78
LF11333	2616-79
LF11508	2623-91
LF11509	2623-8
LF13006	★ **3538**
	640-66
	★ **3538**
	3233-64
LF13007	★ **3538**
	640-67
	★ **3538**
	3233-65
LF13201	2616-80
LF13202	2616-81
LF13331	2616-82
LF13332	2616-83
LF13333	2616-84
LF13508	2623-92
LF13509	2623-9
LF13741	3175-41
	3202-20
LF151	3195-24
LF151A	3190-21
LF153	3206-50
LF155	3194-56
LF155A	3189-44
LF156	3195-4
LF156A	3189-54
LF157	3194-49
LF157A	3189-34
LF198	3238-39
LF198A	3238-40
LF211	3159-59
LF2111	3159-10
LF255	3194-57
LF256	3195-5
LF257	3194-50
LF298	3238-41
LF298A	3238-42
LF311	3160-42
LF347	3213-22
	¶ 293-16
LF347B	3211-26
	¶ 293-16
LF351	3175-42
LF351A	3190-8
LF351B	3195-23
LF353	3209-29
	¶ 293-16
LF353A	3205-13
	¶ 293-16
LF353B	3206-51
	¶ 293-16
LF355	3200-46
LF355A	3189-45
LF355B	3194-58
LF356	3200-51
LF356A	3189-55
LF356B	3195-6
LF357	3200-41
LF357A	3189-35
LF357B	3194-51
LF398	3238-43
LF398A	3238-44
LF400	3201-3
LF411	3190-20
LF411A	3186-7
LF412	3205-55
LF412A	3204-53
LF422A	3204-46
LF441	3195-9
LF441A	3186-6
LF442	3206-44
LF442A	3204-47
LF444	3213-12
LF444A	3211-16
LH0002	3155-15
	¶ 292-6
LH0002C	3155-16
	¶ 292-6
LH0003	3175-105
	3193-29
LH0003C	3193-30
LH0004	3176-127
	3188-45
LH0004C	3176-41
	3176-128
	3189-9
LH0005	3176-15
	3201-15
LH0005A	3176-16
	3193-15
LH0005C	3176-20
	3201-16
LH0020	3176-17
	3192-5
LH0020C	3176-18
	3199-6
LH0021	3175-76
	3193-25
LH0021C	3175-85
	3199-11
LH0022	3193-33
	¶ 295-7
LH0022C	3197-48
	¶ 295-7
	¶ 295-7
LH0023	3238-45
LH0023C	3238-46
LH0024	3176-71
	3180-132
	3194-10
LH0024C	3176-83
	3180-133
	3200-20
LH0032	3176-72
	3180-128
	3195-11
LH0032C	3176-73
	3180-129
	3202-21
LH0033	3174-3
LH0033C	3174-7
LH0036	3155-78
LH0036C	3155-79
LH0037	3155-80
LH0037C	3155-81
LH0038	3155-82
LH0038C	3155-83
LH0041	3175-93
	3193-23
LH0041C	3175-94
	3199-1
LH0042	3202-52
LH0042C	3202-55
	¶ 295-7
LH0043	3238-47
LH0043C	3238-48
LH0044	3182-17
LH0044A	3181-34
LH0044AC	3181-35
LH0044B	3182-16
LH0044C	3183-9
LH0045	3156-146
LH0045C	3156-147
LH0052	3185-18
	¶ 295-7
LH0052C	3187-42
	¶ 295-7
	¶ 295-7
LH0053	3238-49
LH0053C	3238-50
LH0061	3175-87
	3193-54
LH0061C	3175-88
	3201-42
LH0062	3194-29
LH0062C	3202-18

¶ Indicates page number in Application Note Directory.
★ Indicates additional data is provided on the page noted.

IC MASTER

National Semiconductor (Cont'd)

Device	Page-Line
LH0063	3174-9
LH0063C	3174-10
LH0070	3237-79
LH0071	3237-98
LH0071-0	3237-99
LH0071-1	3237-100
LH0071-2	3237-101
LH0075	3223-33
	3228-34
LH0075C	3228-35
LH0076	3229-71
LH0076C	3229-72
LH0082	3155-41
LH0082C	3155-42
LH0084	3155-93
LH0084C	3155-94
LH0086	3155-95
LH0086C	3155-96
LH0091	3237-156
	¶ 308-14
LH0091C	3237-157
	¶ 308-14
LH0094	3235-22
LH0094C	3235-23
LH0101	3175-71
	3201-4
LH0101A	3175-72
	3192-53
LH0101AC	3175-73
	3192-54
LH0101C	3175-74
	3201-5
LH1605	3230-79
LH1605C	3230-80
LH2011	3203-54
LH2011B	3204-29
LH2011C	3204-50
LH2101A	3205-33
LH2108	3205-18
LH2108A	3204-15
LH2110	3174-23
LH2111	3161-6
LH2201A	3205-34
LH2208	3205-19
LH2208A	3204-16
LH2210	3174-17
LH2211	3161-7
LH2250	3206-1
LH2250C	3206-2
LH2301A	3209-16
LH2308	3209-13
LH2308A	3204-23
LH2310	3174-28
LH2311	3162-2
LH24250	3206-3
LH24250C	3208-18
LM10	3190-56
LM101	3197-4
LM1011	3173-30
LM1014	3173-52
	3235-4
LM1017	2661-82
	3170-94
LM1019	3171-47
LM101A	3175-19
	3191-36
LM102	3174-33
LM103	3236-67
LM1035	3164-30
LM1036	3165-195
LM1037	3173-115
LM1038	3173-116
LM104	3229-112
LM1040	3165-196
LM105	3229-40
LM106	3159-21
LM107	3191-20
LM108	3190-42
LM108A	3186-28
LM109H	3221-24
	¶ 314-6
LM109K	3221-63
	¶ 314-6
LM10B	3190-57
LM10BL	3190-54
LM10C	3193-41
LM10CL	3193-40
LM11	3184-56
	¶ 293-17
LM110	3174-24
LM111	3159-43
LM1111	3164-49
LM112	3190-29
LM1121A	3164-50
LM1121B	3164-51
LM1121C	3164-52
LM113	3236-50
LM113-1	3236-51
LM113-2	3236-52
LM1131A	3164-53
LM1131B	3164-54
LM1131C	3164-55
LM117	3228-119
	¶ 314-6
LM11700A	3204-55
LM118	3193-48
LM119	3161-18
	3161-21
LM11A	3182-60
	¶ 293-17
LM11AC	3183-44
	¶ 293-17
LM11C	3187-17
	¶ 293-17
LM11CL	3195-21
	¶ 293-17
LM120H12	3226-117
LM120H15	3227-32
LM120H5	3226-17
LM120K12	3226-128
LM120K15	3227-45
LM120K5	3226-35
LM121	3156-27
LM121A	3156-28
LM122	3220-13
LM123	3222-3
	¶ 314-6
LM124	3180-53
LM124A	3210-25
LM125	3228-12
	¶ 314-6
LM126	3228-5
LM129	3237-12
	¶ 314-6
LM1301	3165-158
LM1303	3165-159
LM13080	3199-21
LM131	3233-123
LM1310	3168-134
LM131A	3233-124
LM134	3232-105
	3238-134
LM135	3238-135
LM136-2	3236-116
	¶ 314-6
LM136-5	3236-153
	¶ 314-6
LM13600	3207-58
LM136A-2	3236-117
	¶ 314-6
LM136A-5	3236-154
	¶ 314-6
LM137	3229-97
	3229-129
	¶ 314-6
LM13700	3206-24
LM13700A	3204-56
LM138	3228-82
LM139	3162-55
LM1391	3171-86
LM139A	3162-24
LM140-12	3223-96
LM140-15	3224-69
LM140-5	3221-91
LM140A-12	3223-97
LM140A-15	3224-70
LM140A-5	3221-92
LM140LA-12	3223-48
LM140LA-15	3224-22
LM140LA-5	3221-10
LM1414	3161-26
LM143	3176-129
LM1436	3176-147
	3201-56
LM144	3176-130
	3195-38
LM1458	3175-4
	3208-37
LM145K5	3226-54
	3226-75
LM146	3210-10
LM149	3211-36
LM1496	3232-78
LM150	3228-65
	¶ 314-6
LM1514	3160-50
LM1524	3230-81
LM1536	3176-131
	3195-40
LM1558	3207-38
LM158	3180-24
	3207-9
LM158A	3180-16
LM159	3203-21
LM1596	3232-79
LM160	3160-1
LM161	3159-32
LM163	3183-3
LM163A	3155-88
	3182-8
LM168-10	3237-80
LM168-5	3236-155
LM168-6	3236-181
LM1800	3168-135
LM1801	3173-91
LM1812	3169-4
LM1818	3169-120
LM1819	3232-32
LM1821	3167-143
LM1822	3172-116
LM1828	3170-120
LM1830	3233-97
LM1837	3165-120
LM1848	3170-121
LM185	3236-64
LM185-1	3236-77
LM185-2	3236-118
LM1851	3173-35
LM1863	3167-106
LM1865	3168-60
LM1866	3168-1
LM1868	3167-144
LM1870	3168-136
LM1871	3169-33
LM1872	3169-34
LM1875	3165-24
LM1877	3165-69
LM1879	3164-84
LM1880	3171-66
LM1886	3172-117
LM1889	3172-118
	3173-23
LM1893	★ **3539**
	3166-12
	3239-115
LM1894	3164-56
LM1895	3165-70
LM1896	3165-71
LM1897	3165-160
LM192	3156-4
	3206-20
LM193	3161-32
LM193A	3160-53
LM194	3157-69
LM1949	3166-10
LM195	3232-93
LM196	3228-27
LM1981	3167-126
LM199	3237-13
	¶ 314-6
	¶ 315-6
LM199A	3237-14
	¶ 314-6
	¶ 315-6
	¶ 315-6
LM2001	3164-85
LM2002	3164-146
LM2005	3165-25
	3166-24
LM201	3200-1
LM201A	3191-37
LM202	3174-35
LM204	3229-113
LM205	3229-41
LM206	3159-22
LM207	3191-21
LM208	3190-43
LM208A	3186-29
LM209H	3221-25
LM209K	3221-64
LM210	3174-18
LM211	3159-44
LM212	3190-30
LM217	3228-120
LM218	3193-49
LM219	3161-22
LM221	3156-29
LM221A	3156-30
LM223	3222-4
LM224	3180-54
LM224A	3210-51
LM231	3233-125
LM231A	3233-126
LM234	3232-106
	3238-136
LM236-2	3236-119
LM236-5	3236-156
LM236A-2	3236-120
LM236A-5	3236-157
LM237	3229-98
	3230-1
LM238	3228-83
LM239	3163-12
LM239A	3162-36
LM246	3210-11
LM248	3212-31
LM249	3212-37
LM250	3228-66
LM2524	3230-82
LM258	3180-25
	3207-10
LM258A	3180-26
	3206-5
LM260	3160-2
LM261	3159-33
LM268-10	3237-81
LM268-5	3236-158
LM268-6	3236-182
LM285	3236-65
LM285-1	3236-78
LM285-2	3236-121
LM2877	3165-72
LM2878	3165-86
LM2879	3165-87
LM2887	3170-122
LM2889	3172-119
LM2895	3164-86
LM2896	3165-73
LM2900	3180-92
LM2901	3163-31
LM2902	3180-9
LM2903	3161-55
LM2904	3180-10
LM2905	3220-14
LM2907	3173-135
	3234-6
	¶ 308-12
LM2917	3173-136
	3234-7
	¶ 308-12
LM292	3156-5
	3207-20
LM2924	3156-2
LM293	3161-44
LM2930-5	3221-26
LM2930-8	3222-98
LM2931	3228-32
LM2931-5	3221-93
LM2935	★ **3540**
	3221-55
	3228-1
LM293A	3160-57
LM295	3232-94
LM299	3237-15
	¶ 315-6
LM299A	3237-16
	¶ 315-6
	¶ 315-6
LM3011	3168-61
LM301A	3199-51
LM302	3174-39
LM304	3229-73
LM3045	3157-8
LM3046	3157-9
LM305	3228-49
LM305A	3229-47
LM306	3160-4
LM3064	3170-36
LM307	3199-42
LM3075	3168-62
LM308	3199-34
LM3080	3165-121
LM3080A	3165-122
LM3086	3157-10
LM3089	3168-63
LM308A	3186-55
LM309H	3221-27
LM309K	3221-65
LM310	3174-30
LM311	3160-29
LM312	3199-27
LM3126	3170-123
LM313	3236-53
LM3146	3157-11
LM316	3200-35
LM316A	3192-28
LM317	3228-121
LM317L	3228-100
LM318	3201-39
LM3189	3168-64
LM319	3162-5
LM320H12	3226-118
LM320H15	3227-33
LM320H5	3226-18
LM320K12	3226-129
LM320K15	3227-46
LM320K5	3226-36
LM320L05	3226-9
LM320L12	3226-112
LM320L15	3227-27
LM320ML05	3226-14
LM320ML15	3227-37
LM320MP12	3226-124
LM320MP15	3227-40
LM320MP5	3226-19
LM320T12	3226-130
LM320T15	3227-47
LM320T5	3226-37
LM321	3156-31
LM321A	3156-32
LM322	3220-15
LM323	3222-5
LM324	3180-55
LM324A	3210-53
LM325	3228-13
LM326	3228-6
LM329	3237-17
LM330-5	3221-28
LM3301	3180-90
LM3302	3163-43
LM331	3233-127
LM331A	3233-128
LM334	3232-107
	3238-137
LM335	3238-138
LM336-2	3236-122
LM336-5	3236-159
LM336B-5	3236-160
LM337	3229-99
	3230-2
LM337L	3229-128
LM338	3228-84
LM339	3163-13
LM339A	3162-37
LM340-12	3223-98
	¶ 314-6
LM340-15	3224-71
	¶ 314-6
LM340-5	3221-94
	¶ 314-6
LM3401	3180-86
LM340A-12	3223-99
	¶ 314-6
LM340A-15	3224-72
	¶ 314-6
LM340A-5	3221-95
	¶ 314-6
LM340LA-12	3223-49
	¶ 314-6
LM340LA-15	3224-23
	¶ 314-6
LM341-12	3223-62
	¶ 314-6
LM341-15	3224-36
	¶ 314-6
LM341-5	3221-42
	¶ 314-6
LM342-12	3223-57
LM342-15	3224-31
LM342-5	3221-35
LM343	3176-148
LM344	3176-136
	3200-7
LM345K5	3226-55
	3226-76
LM346	3210-12
LM348	3212-32
LM349	3212-38
LM35	3238-139
LM350	3228-67
LM3524	3230-83
LM358	3180-17
LM358A	3180-27
	3206-12
LM359	3203-22
LM360	3160-3
LM361	3159-62
LM363	3155-89
	3184-18
LM363A	3155-90
	3182-9
LM368-10	3237-82
LM368-5	3236-161
LM368-6	3236-183
LM376	3229-32
LM377	3165-74
LM378	3165-75
LM379	3165-88
LM380	3164-87
LM381	3165-161
LM382	3165-162
LM3820	3167-123
LM383	3164-147
LM383A	3164-148
LM384	3164-149
LM385	3236-66
LM385-1	3236-79
LM385-2	3236-123
LM386	3164-88
LM387	3165-163
LM388	3164-89
LM389	3155-12
	3164-90
	¶ 302-4
LM390	3164-91
LM3900	3180-93
LM3905	3220-16
LM3909	3233-95
LM391	3164-74
LM3911	3238-140
LM3914	2661-2
	¶ 289-2
LM3915	2661-3
LM3916	2661-28
LM392	3156-6
	3207-21
LM3924	3156-3
LM393	3161-45
LM3931-5	3221-18
LM393A	3160-58
LM394	3157-70
LM395	3232-95
LM396	3228-28
LM399	3237-18
	¶ 315-6
LM3999	3237-19
LM399A	3237-20
	¶ 315-6
	¶ 315-6
LM4250	3193-3
LM4250C	3195-33
LM4500A	3168-137
LM555C	3220-39
LM556	3220-77
LM556C	3220-78
LM565	3215-3
LM565C	3215-4
LM566	3215-12
LM566C	3215-13
LM567	3214-146
LM567C	3214-147
	3218-124
LM709	3196-46
LM709A	3191-48
LM709C	3200-4
LM710	3159-25
LM710C	3160-7
LM711	3161-16
LM711C	3161-36
LM723	3229-11
LM723C	3229-12
LM725	3188-50
LM725A	3199-7
LM725C	3191-63
LM733	3156-94

Arranged alphanumerically from left to right.

© IC MASTER 1984

National Semiconductor (Cont'd)

Device	Page-Line
LM741	3175-30
	3196-52
LM741A	3193-17
LM741C	3198-46
LM741E	3193-18
LM747	3207-39
LM747A	3206-9
LM747C	3208-38
LM747E	3206-10
LM748	3197-9
LM748C	3197-10
LM7805	3221-96
LM7812	3223-100
LM7815	3224-73
LM78L05A	3221-11
LM78L05C	3221-12
LM78L12A	3223-50
LM78L12C	3223-51
LM78L15A	3224-24
LM78L15C	3224-25
LM78M05	3221-43
LM78M12	3223-63
LM78M15	3224-37
LM7905	3226-38
LM7912	3227-7
LM7915	3227-58
LM79L05	3226-10
LM79L05A	3226-11
LM79L12	3226-113
LM79L12A	3226-114
LM79L15	3227-28
LM79L15A	3227-29
LM79M05	3226-20
LM79M12	3226-125
LM79M15	3227-41
LM832	3164-47
LM833	3207-56
LP165	3236-33
LP339	3162-50
LP365	3236-34
LT137A	3229-100
LT337A	3229-101
LX04XXA	3236-11
LX05XXA	3236-12
LX05XXA0	3236-13
LX06002D	3236-28
LX06002G	3236-29
LX0603GB	3236-21
LX06XXGB	3236-22
LX06XXXA	3236-14
LX06XXXD	3236-30
LX14XXA	3236-15
LX14XXAF	3236-16
LX14XXAS	3236-17
LX1600A	3236-18
	¶ 315-7
	¶ 315-8
LX16XXA	3236-19
LX16XXD	3236-25
LX16XXG	3236-31
LX16XXGB	3236-23
LX18XXA	3236-20
LX18XXD	3236-26
LX18XXG	3236-32
LX18XXGB	3236-24
LX96XXD	3236-27
M1812	3238-99
MA2000	★ **2047**
MA2016	★ **2048**
MA2232	★ **2049**
	2685-21
	★ **2049**
	1354-43
MA2732	★ **2050**
MA2800	★ **2051**
	1955-10
MC1408-6	2642-50
MC1408-7	2642-42
MC1408-8	2641-24
MC1508-8	2641-25
MCA1200ECL	4460-30
MCA1300ALS	4462-18
MCA1500M	4460-5
MCA2500ECL	4460-4
MCA2800ALS	4460-36
MCA400ALS	4462-16
MCA600ECL	4460-26
MF10	3232-24
MF4	★ **3541**
	3232-25
MF5	3232-26
MF6	3232-27
MH0007	2680-92
	¶ 288-15
MH0007C	2680-93
	¶ 288-15
MH0009	2681-51
	¶ 288-15
MH0009C	2681-52
	¶ 288-15
MH0012	2680-94
	¶ 288-15
MH0012C	2680-95
	¶ 288-15
MH0013	2681-53
	¶ 288-15
MH0013C	2681-54
	¶ 288-15
MH8805	2682-64
MM2114	3777-31
MM2114-15	3776-34
MM2114-2	3776-65
MM2114-2L	3776-66
MM2114-3	3776-127
MM2114-3L	3776-128
MM2114L	3777-32
MM2147	3779-124
MM2147-3	3779-94
MM2147L	3779-125
MM2147M	3780-6
MM2148H	3779-126
MM2148H-2	3779-74
MM2148H-3	3779-95
MM2148H-3L	3779-96
MM2148H-L	3779-127
MM2716	3765-79
MM2716-1	3765-57
MM2716-2	3765-65
MM2758	3763-121
MM52116	3784-33
MM52116FDW	3755-6
MM52116FDX	3755-31
MM52132	3785-11
MM52164	3786-78
MM5257	3780-125
	¶ 322-17
MM5257-25	3780-63
	¶ 322-17
MM5257-25L	3780-64
	¶ 322-17
MM5257-3	3780-95
	¶ 322-17
MM5257-3L	3780-96
	¶ 322-17
MM5257L	3780-126
	¶ 322-17
MM5290-1	3768-76
	¶ 320-12
MM5290-2	3768-92
	¶ 320-12
MM5290-3	3768-110
	¶ 320-12
MM5290-4	3769-11
	¶ 320-12
MM5303	2686-52
	¶ 266-13
MM5307	640-13
	2685-40
MM5309	3166-130
	¶ 315-3
MM53100	3172-47
	¶ 304-4
MM53104	3173-2
MM53105	3172-48
MM53107	590-21
	¶ 304-4
MM53108	3166-86
MM5311	3166-131
	¶ 315-3
MM53110	3166-132
MM53113	3166-104
MM5312	3166-133
	¶ 315-3
MM53124	3166-105
MM53125	3219-81
MM5313	3166-134
MM53130	3219-82
MM5314	3166-135
MM53143	3217-10
MM53144	3217-11
MM5315	3166-136
	¶ 315-3
MM5316	3166-87
MM5318	3166-137
MM53190	3217-12
MM5321	3170-53
MM5322	3166-162
MM53226	3169-5
MM5368	590-46
MM5369	590-47
MM5378	3166-138
MM5387	3166-88
MM5393	3217-13
MM5394	3217-14
MM5395	3219-83
MM5402	3166-89
MM5405	3166-90
MM54104	3169-93
MM54240	2685-18
MM5425	3169-35
MM5430	3167-150
MM5431	3167-151
MM5437	3164-43
MM5445	2662-110
MM5446	2662-111
MM5447	2662-112
MM5448	2662-113
MM5450	2662-108
MM5451	2662-109
MM5452	2664-12
MM5453	2664-13
MM5455	3166-106
MM5456	3166-107
MM5457	3166-108
MM5462	3166-109
MM5463	3166-110
MM5464	3166-111
MM5465	3166-112
MM5466	3166-113
MM5474	2662-104
MM5476	2662-105
MM5477	2662-106
MM5478	2662-107
MM5483	2664-22
MM5484	2664-8
MM5485	2663-146
MM5486	2661-61
MM54ALS632	2665-35
MM54ALS633	2665-36
MM54ALS634	2665-37
MM54ALS635	2665-38
MM54C00	583-84
MM54C02	585-43
MM54C04	573-199
MM54C08	582-128
MM54C10	583-28
MM54C107	581-172
MM54C14	593-133
	¶ 259-8
MM54C150	589-64
MM54C151	588-167
MM54C154	579-76
MM54C157	588-83
MM54C160	576-105
MM54C161	574-88
MM54C162	576-65
MM54C163	574-53
MM54C164	591-100
	3790-107
MM54C165	591-72
	3790-75
MM54C173	580-100
MM54C174	580-164
MM54C175	580-135
MM54C192	576-147
MM54C193	574-136
MM54C195	590-133
	3789-41
MM54C20	582-182
MM54C200	587-150
	3772-59
MM54C221	589-134
	¶ 259-11
MM54C240	594-15
MM54C244	593-169
MM54C30	583-136
MM54C32	584-88
MM54C374	581-86
MM54C42	578-36
MM54C48	578-72
MM54C73	581-173
MM54C74	580-52
MM54C76	582-21
MM54C83	571-42
MM54C85	571-111
MM54C86	585-127
MM54C89	587-131
MM54C90	576-92
MM54C901	572-171
	¶ 290-1
MM54C902	572-173
	¶ 290-1
MM54C903	572-167
	¶ 290-1
MM54C904	572-169
	¶ 290-1
MM54C905	592-132
MM54C906	572-163
MM54C907	572-165
MM54C909	592-56
	3163-2
MM54C910	587-168
MM54C914	593-134
MM54C915	580-39
	2663-82
MM54C920	588-30
	¶ 320-6
MM54C921	588-31
	¶ 320-6
MM54C922	2667-1
	¶ 254-6
MM54C923	2667-6
MM54C929	588-10
	¶ 320-6
MM54C93	574-39
MM54C930	588-11
	¶ 320-6
MM54C941	573-140
	2669-34
MM54C95	590-102
	3789-55
MM54HC00	583-85
MM54HC02	585-44
MM54HC04	574-1
MM54HC08	582-129
MM54HC10	583-29
MM54HC107	581-174
MM54HC109	582-22
MM54HC11	582-90
MM54HC112	581-156
MM54HC123	589-101
MM54HC125	572-51
MM54HC126	572-44
MM54HC132	593-95
MM54HC133	583-161
MM54HC138	578-157
MM54HC139	578-113
MM54HC14	593-120
MM54HC147	589-58
	589-62
MM54HC151	588-168
MM54HC153	588-75
MM54HC154	579-77
MM54HC157	588-84
MM54HC158	588-85
MM54HC160	576-106
MM54HC161	574-89
MM54HC162	576-66
MM54HC163	574-54
MM54HC164	591-101
MM54HC165	591-73
MM54HC175	580-136
MM54HC192	576-148
MM54HC193	574-137
MM54HC194	590-103
MM54HC195	590-134
MM54HC20	583-30
MM54HC240	594-16
MM54HC241	594-53
MM54HC242	593-58
MM54HC244	593-170
MM54HC251	589-12
MM54HC253	588-67
MM54HC257	588-127
MM54HC259	587-57
MM54HC266	584-55
MM54HC27	584-192
MM54HC280	571-183
MM54HC299	591-151
MM54HC30	583-137
MM54HC32	584-89
MM54HC354	589-26
MM54HC356	589-27
MM54HC365	573-48
MM54HC366	573-5
MM54HC367	573-49
MM54HC368	573-6
MM54HC373	586-143
MM54HC374	581-87
MM54HC390	577-51
MM54HC393	575-28
MM54HC4002	584-151
MM54HC4017	576-24
MM54HC4018	585-93
MM54HC4020	575-134
MM54HC4040	575-97
MM54HC4049	572-95
MM54HC4050	572-140
MM54HC4060	575-163
MM54HC42	578-37
MM54HC4301	587-38
MM54HC4302	587-36
MM54HC4303	581-19
MM54HC4304	581-17
MM54HC4305	573-93
MM54HC4511	580-3
MM54HC4514	579-34
MM54HC4543	580-4
MM54HC51	584-14
MM54HC533	587-1
MM54HC534	581-37
MM54HC563	587-2
MM54HC564	581-38
MM54HC573	586-144
MM54HC574	581-88
MM54HC58	583-192
MM54HC646	594-92
MM54HC648	594-78
MM54HC688	592-66
MM54HC73	581-175
MM54HC74	580-53
MM54HC75	586-56
MM54HC76	582-23
MM54HC77	587-58
MM54HC85	571-112
MM54HC86	585-128
MM54HC942	3217-154
MM54HCU04	573-170
MM55108	3214-117
MM55110	3214-118
MM55121	3214-119
MM55123	3214-120
MM55124	3214-121
MM55126	3214-122
MM554	2623-14
MM57190	3214-89
MM57409	1351-150
	1355-48
MM57436	1351-155
	1355-53
MM57455	1354-97
MM57459	1351-156
	1355-54
MM57499	641-90
MM58106	3166-164
MM58142	3166-165
MM58143	3166-91
MM58144	3166-92
MM58201	2661-73
MM58250	3169-36
MM5837	3167-74
	3235-88
MM58438	2664-17
MM5865	640-38
	¶ 314-12
	¶ 314-13
	3220-63
	¶ 314-12
	¶ 314-13
MM70C95	573-50
MM70C96	573-176
MM70C97	573-51
MM70C98	573-177
MM72C19	589-69
MM74ALS632	2665-39
MM74ALS633	2665-40
MM74ALS634	2665-41
MM74ALS635	2665-42
MM74C00	583-86
	¶ 251-12
MM74C02	585-45
	¶ 251-12
MM74C04	574-2
	¶ 251-12
MM74C08	582-130
MM74C10	583-31
MM74C107	581-176
MM74C14	593-135
	¶ 259-8
MM74C150	589-65
MM74C151	588-169
MM74C154	579-78
MM74C157	588-86
MM74C160	576-107
MM74C161	574-90
MM74C162	576-67
MM74C163	574-55
MM74C164	591-102
	3790-108
MM74C165	591-74
	3790-76
MM74C173	580-101
MM74C174	580-165
MM74C175	580-137
MM74C192	576-149
MM74C193	574-138
MM74C195	590-135
	3789-51
MM74C20	582-183
MM74C200	587-151
	3772-60
MM74C221	589-135
	¶ 259-11
MM74C240	594-17
MM74C244	593-171
MM74C30	583-138
MM74C32	584-90
MM74C374	581-89
MM74C42	578-38
MM74C48	578-73
MM74C73	581-177
MM74C74	580-54
MM74C76	582-24
MM74C83	571-43
MM74C85	571-113
MM74C86	585-129
MM74C89	587-132
	3771-46
MM74C90	576-93
MM74C901	572-172
	¶ 290-1
MM74C902	572-174
	¶ 290-1
MM74C903	572-168
	¶ 290-1
MM74C904	572-170
	¶ 290-1
MM74C905	592-133
MM74C906	572-164
MM74C907	572-166
MM74C908	580-30
	¶ 252-3
MM74C909	592-57
	3163-3
MM74C910	587-169
	¶ 322-5
MM74C911	580-36
	2663-3
MM74C912	580-37
	2663-63
MM74C914	593-136
MM74C915	580-40
	2663-83
MM74C917	580-38
	2663-64
MM74C918	580-31
	¶ 252-3
MM74C920	588-32
	¶ 320-6
MM74C921	588-33
	¶ 320-6
MM74C922	2667-2
	¶ 254-6
MM74C923	2667-7
MM74C925	577-96
MM74C926	577-97
MM74C927	577-79
MM74C928	577-78
MM74C929	588-12
	¶ 320-6
MM74C93	574-40
MM74C930	588-13
	¶ 320-6
MM74C932	592-56
MM74C941	573-141
	2669-35
MM74C945	577-80
MM74C946	577-75

¶ Indicates page number in Application Note Directory.
★ Indicates additional data is provided on the page noted.

IC MASTER

Device	Page-Line
National Semiconductor (Cont'd)	
MM74C947	577-81
MM74C95	590-104
	3789-56
MM74C956	579-168
	2663-4
	1353-45
MM74HC00	583-87
MM74HC02	585-46
MM74HC04	574-3
MM74HC08	582-131
MM74HC10	583-32
MM74HC107	581-178
MM74HC109	582-25
MM74HC11	582-91
MM74HC112	581-157
MM74HC123	589-102
MM74HC125	572-52
MM74HC126	572-45
MM74HC132	593-96
MM74HC133	583-162
MM74HC138	578-158
MM74HC139	578-114
MM74HC14	593-121
MM74HC147	589-59
	589-63
MM74HC151	588-170
MM74HC153	588-76
MM74HC154	579-79
MM74HC157	588-87
MM74HC158	588-88
MM74HC160	576-108
MM74HC161	574-91
MM74HC162	576-68
MM74HC163	574-56
MM74HC164	591-103
MM74HC165	591-75
MM74HC175	580-138
MM74HC192	576-150
MM74HC193	574-139
MM74HC194	590-105
MM74HC195	590-136
MM74HC20	583-33
MM74HC240	594-18
MM74HC241	594-54
MM74HC242	593-59
MM74HC244	593-172
MM74HC251	589-13
MM74HC253	588-68
MM74HC257	588-128
MM74HC259	587-59
MM74HC266	584-56
MM74HC27	584-193
MM74HC280	571-184
MM74HC299	591-152
MM74HC30	583-139
MM74HC32	584-91
MM74HC354	589-28
MM74HC356	589-29
MM74HC365	573-52
MM74HC366	573-7
MM74HC367	573-53
MM74HC368	573-8
MM74HC373	586-145
MM74HC374	581-90
MM74HC390	577-52
MM74HC393	575-29
MM74HC4002	584-152
MM74HC4017	576-25
MM74HC4018	585-94
MM74HC4020	575-135
MM74HC4040	575-98
MM74HC4049	572-96
MM74HC4050	572-141
MM74HC4060	575-164
MM74HC42	578-39
MM74HC4301	587-39
MM74HC4302	587-37
MM74HC4303	581-20
MM74HC4304	581-18
MM74HC4305	573-94
MM74HC4511	580-5
MM74HC4514	579-35
MM74HC4543	580-6
MM74HC51	584-15
MM74HC533	587-3
MM74HC534	581-39
MM74HC563	587-4
MM74HC564	581-40

Device	Page-Line
MM74HC573	586-146
MM74HC574	581-91
MM74HC58	583-193
MM74HC646	594-93
MM74HC648	594-79
MM74HC688	592-67
MM74HC73	581-179
MM74HC74	580-55
MM74HC75	586-57
MM74HC76	582-26
MM74HC77	587-60
MM74HC85	571-114
MM74HC86	585-130
MM74HC942	3217-155
MM74HCU04	573-171
MM74PC00	583-88
MM74PC02	585-47
MM74PC04	574-4
MM74PC08	582-132
MM74PC138	578-159
MM74PC74	580-56
MM78C29	593-82
	2671-21
MM78C30	593-28
	2670-27
MM80C95	573-54
MM80C96	573-178
MM80C97	573-55
MM80C98	573-179
MM80C100	3216-125
MM82C08	636-92
MM82C19	589-70
MM82PC08	636-93
	1348-9
	1348-10
MM82PC12	1348-21
MM8702A-4	3761-5
MM88C29	593-83
	2671-22
MM88C30	593-29
	2670-28
MOLE	★ **1926**
	1815-8
NF5301	3173-92
NMC2114A-3	3776-35
NMC2114A-3L	3776-36
NMC2114A-4	3776-67
NMC2114A-4L	3776-68
NMC2116-15	3778-76
NMC2116-15L	3778-77
NMC2116-20L	3778-126
NMC2116-25	3779-23
NMC2116-25L	3778-127
NMC2141-2	3780-16
NMC2141-3	3780-22
NMC2147H-3	3779-97
NMC2147H-4	3779-98
NMC2148	3776-7
NMC2148-3	3775-115
NMC2148H	3776-8
NMC2148L	3776-9
NMC214A-5	3776-94
NMC2716E	3765-80
NMC27C16-45	3765-81
NMC27C16-55	3765-86
NMC27C32-35	3766-52
NMC27C32-45	3766-62
NMC27C32-55	3766-66
NMC2816-25	3758-66
NMC2816-35	3758-87
NMC2816-45	3758-101
NMC2816E-25	3758-67
NMC2816E-35	3758-88
NMC2816E-45	3758-102
NMC4164-12	3769-53
	¶ 321-12
NMC4164-15	3769-78
	¶ 321-12
NMC4164-20	3769-104
	¶ 321-12
NMC4864	3781-118
NMC6404-9	3780-73
NMC6503-5	3777-102
NMC6503-9	3777-101
NMC6504-2	3780-74
NMC6504-5	3780-104
NMC6504-9	3780-75
NMC6508	588-14
NMC6514-2	3776-105
NMC6514-5	3777-6
NMC6514-9	3776-106
NMC6516	588-15

Device	Page-Line
NMC6518	588-16
NMC6551	588-34
NMC6552	588-35
NMC6716-1	3765-58
NMC6716-2	3765-66
NMC85008B-9	3774-111
NMC9306	★ **4067**
	3758-2
NMC9346	★ **4068**
	3758-23
NMC9716-25	★ **4069**
	3758-68
NMC9716-35	★ **4069**
	3758-89
NMC9716-45	★ **4069**
	3758-103
NMC9817-20	3758-60
NMC9817-25	3758-75
NMC9817-35	3758-97
NMH2864	3759-18
NMH2864C	3759-19
NS08032	★ **1513**
	1352-44
NS16000	★ **1513**
NS16008	1352-41
	1352-45
NS16016	1350-26
	1352-53
	1287-3
NS16032	★ **1513**
	1352-46
NS16032-10	★ **1513**
	1289-5
NS16032-4	★ **1513**
	1289-6
NS16032-6	★ **1513**
	1351-75
	★ **1513**
	1289-7
NS16081	★ **1513**
	1351-76
NS16082	★ **1513**
	1351-80
NS16201	★ **1514**
	1351-82
NS16201-6	★ **1514**
	1351-78
NS16202	★ **1514**
	1351-79
NS16203	★ **1514**
	1352-61
NS16204	★ **1514**
	1350-28
	1352-55
NS16413	★ **1514**
	1352-58
	1352-59
NS16425	★ **1514**
	1350-38
	1352-69
NS16450	★ **1514**
NS16455	★ **1514**
	1352-70
NS16456	★ **1514**
	1352-67
NS16488	★ **1514**
	1352-63
NS16C032	★ **1513**
	1352-47
NS32032	★ **1513**
	1352-49
	★ **1513**
	1289-11
NS32C032	★ **1513**
	1352-50
NS32C132	★ **1513**
	1352-51
NS32C32	1352-52
NS455	★ **1528**
	1353-4
NS8040	★ **1524**
NS8050	★ **1524**
NS87P50	★ **1524**
	1344-74
	★ **1524**
	1277-18
NSC800	★ **1516**
	1348-8
	¶ 264-5
	¶ 265-8

Device	Page-Line
NSC800-1	★ **1516**
	1348-6
	¶ 264-5
	¶ 265-8
	★ **1516**
	1277-19
	¶ 264-5
	¶ 265-8
NSC800-4	★ **1516**
	1348-7
	¶ 264-5
	¶ 265-8
	★ **1516**
	1277-20
	¶ 264-5
	¶ 265-8
NSC810	1348-14
NSC810-1	1348-15
NSC810-4	1348-16
NSC830	1348-17
NSC830-1	1348-18
NSC830-4	1348-19
NSC831	1348-11
NSC831-1	1348-12
NSC831-4	1348-13
NSC858	1348-20
NSC888	1955-8
NSL4944	3234-109
NSM4307	2663-5
NSM4507	2663-6
PS55494	2663-55
SC16008	1277-21
SCX6212	4461-14
SCX6224	4461-15
SCX6225	4461-16
SCX6248	4461-17
SCX6260	4461-18
SCX6306	4463-3
SCX6312	4463-4
SCX6324	4463-5
SCX6325	4463-6
SCX6348	4463-7
SCX6360	4463-8
SHM6401	3238-51
SN5491A	3790-119
SN7491A	3790-120
STARPLEX	1815-9
STARPLEXII	1815-10
SYS16	★ **1515**
TAA550	3225-126
	3225-128
	3225-130
	3227-125
	3227-127
	3227-128
TBA120	3168-65
TBA120S	3171-162
TBA440	3172-120
TBA510	3170-124
TBA530	3170-125
TBA540	3170-126
TBA560	3170-127
TBA920	3171-87
TBA950-2	3171-88
TBA970	3172-121
TBA990	3170-128
TDA2002	3164-150
TDA2002A	3164-151
TDA2003	3164-152
TDA2522	3170-129
TDA2523	3170-130
TDA2530	3170-131
TDA2540	3172-122
TDA2541	3172-123
TDA2560	3170-132
TDA2590	3171-89
TDA2591	3171-90
TDA3500	3170-133
TDA3501	3170-134
TDA440	3172-124
TP3020	3216-116
TP3021	3216-50
TP3040	3217-97
TP3040A	3217-98
TP3051	3216-70
TP3052	3216-84
TP3053	3216-85
TP3054	3216-86
TP3056	3216-71
TP3057	3216-87
TP3110	3217-57
TP3120	3217-58

Device	Page-Line
TP5116	3216-117
TP5116A	3216-118
TP5117A	3216-103
TP5156	3216-51
TP5156A	3216-52
TP5700	3218-65
TP5710	3218-66
VMC68K/15	1965-40
NEC Electronics	
EA2114L	3777-33
MC1938	3216-146
MC4137	3216-147
MC4138	3216-148
MC4264	3217-82
MC4290	★ **3549**
	2681-24
TK-80A	1963-2
UPC51A	3197-33
UPC580	3170-135
μCOM-4	1261-9
μCOM-75	1339-70
μPB10142	3771-74
μPB10144	598-25
	3772-13
μPB10148	598-12
	3771-77
μPB2089	3771-23
μPB2200	3772-33
μPB2202	3772-44
μPB2205	3774-70
μPB2206	3772-30
μPB2289	3770-103
μPB409	3768-16
μPB429	3768-17
μPB450	4482-69
μPB54030	★ **4809**
μPB6101	★ **4804**
	4465-14
μPB6102	★ **4804**
	4465-15
μPB6103	★ **4804**
μPB6110	4463-20
μPB6301	★ **4799**
	4460-18
μPB6310	★ **4799**
	4460-19
μPB6320	★ **4799**
	4460-20
μPB65060	★ **4809**
μPB65100	★ **4809**
μPB8212	1345-148
μPB8214	1344-111
	1355-43
μPB8216	1344-86
	1345-79
	1346-106
μPB8224	1345-91
μPB8226	1344-87
	1345-80
	1346-107
μPB8228	1346-2
μPC1009	3170-96
μPC1023	3165-123
μPC1024	3165-124
μPC1026	3168-138
μPC1028	3168-66
μPC1031	3172-74
μPC1032	3165-125
μPC1215V	3167-110
μPC1251	3209-9
μPC1380	3170-136
μPC141	3228-50
μPC142	3229-74
μPC151	3198-47
μPC154	3188-46
μPC1555	3220-40
μPC157	3199-52
μPC1651	3156-95
μPC1651G	★ **3554**
μPC177	3163-14
μPC251	3208-39
μPC254	3189-1
μPC271	3160-30
μPC2901	3163-32
μPC2902	3180-48
μPC301	3199-53
μPC305	3228-51
μPC311	3160-31
μPC319	3162-6

Device	Page-Line
μPC324	3180-56
μPC325	3228-52
μPC339	3163-15
μPC354	3184-6
μPC358	3209-10
μPC3911	3238-141
	¶ 315-5
μPC393	3161-51
μPC4081	3202-31
μPC4082	3209-43
μPC4084	3213-33
μPC4250C	3198-33
μPC451	3180-49
μPC454	3203-44
μPC4556	3208-30
μPC4557	3208-28
μPC4558	3208-57
μPC4559	3208-29
μPC4560	3208-61
μPC4741	3211-43
μPC566	3165-126
μPC575	3171-163
μPC577	3167-145
μPC592	3165-127
μPC595	3172-125
μPC596	3172-126
μPC603	2638-20
μPC610	2647-25
μPC624	2640-39
μPC648	2650-21
μPC649	3238-52
μPC71	3160-8
μPC725	3191-64
μPC741	3175-31
	3198-48
μPC751	★ **3543**
	2679-35
μPC752	★ **3543**
	2679-36
μPC754	★ **3547**
	3155-40
μPC767	3219-84
μPC7805	3221-66
μPC7808	3223-8
μPC7812	3223-75
μPC7818	3224-126
μPC7824	3225-81
μPC78L05	3221-13
μPC78L08	3222-92
μPC78L12	3223-52
μPC78L15	3224-26
μPC78M05	3221-44
μPC78M08	3222-103
μPC78M12	3223-64
μPC78M15	3224-38
μPC78M18	3224-119
μPC78M24	3225-72
μPC7905	3226-26
μPC7908	3226-95
μPC7912	3226-131
μPC7915	3227-48
μPC7918	3227-82
μPC7924	3227-116
μPD-2118-2	3768-77
μPD2102AL-2	3775-19
μPD2102AL-4	3775-45
μPD2111AL-2	3773-28
μPD2114L	3777-34
μPD2118	3768-93
μPD2118-3	3768-65
μPD2147	3780-10
μPD2147-2	3779-128
μPD2147-3	3779-99
μPD2147A	★ **4080**
μPD2147A-25	3779-53
μPD2147A-35	3779-64
μPD2147A-45	3779-75
μPD2149	★ **4083**
	3775-116
μPD2149-1	★ **4083**
	3775-96
μPD2149-2	★ **4083**
	3775-83
μPD2167	★ **4086**
	3782-36
μPD2167-2	★ **4086**
	3782-52
μPD2167-3	★ **4086**
	3782-37
μPD22100	3216-139
μPD2308A	★ **4096**
	3783-68

Arranged alphanumerically from left to right.

© IC MASTER 1984

NEC Electronics (Cont'd)

Device	Page-Line
μPD2308A-35	★ 4096
	3783-57
μPD2308A-45	★ 4096
	3783-62
μPD231000-30	★ 4110
	3787-104
μPD231000-35	★ 4110
	3787-106
μPD23128	★ 4106
	3787-7
μPD2316E	★ 4098
	3784-34
μPD2316E-35	★ 4098
	3784-16
μPD2316E-45	★ 4098
	3784-35
μPD2316E-5	★ 4098
	3784-17
μPD23256	★ 4108
	3787-70
μPD2332	★ 4100
	3785-12
μPD2332A	★ 4100
	3785-13
μPD2332A-1	★ 4100
	3784-114
μPD2332A-30	★ 4100
	3784-86
μPD2332A-35	★ 4100
	3784-115
μPD2332A-45	★ 4100
	3785-14
μPD2332B	★ 4100
	3785-15
μPD2332B-1	★ 4100
	3784-116
μPD2332B-30	★ 4100
	3784-87
μPD2332B-35	★ 4100
	3784-117
μPD2332B-45	★ 4100
	3785-16
μPD2364-30	★ 4102
	3786-10
μPD2364-35	★ 4102
	3786-48
μPD2364-45	★ 4102
	3786-92
μPD2364E	★ 4102
	★ 4104
	3785-64
μPD2364E-20	★ 4102
	3785-65
μPD2364E-25	★ 4102
	3785-105
μPD23C128	★ 4112
	3787-107
μPD2716	3765-82
μPD2732	3766-63
μPD3301	1344-91
	1345-100
	1346-111
μPD371	1345-84
	1346-109
	1352-90
	¶ 278-4
μPD372	1353-105
	¶ 278-5
μPD379	2686-36
	¶ 271-1
	1344-157
	1346-64
	1346-68
	¶ 271-1
μPD4016-1	★ 4088
	3779-24
μPD4016-2	★ 4088
	3778-128
μPD4016-3	★ 4088
	3778-78
μPD4104	3780-97
μPD4104-1	3780-65
μPD4104-2	3780-42
μPD411	3768-46
μPD411-1	3768-44
μPD411-2	3768-35
μPD411-3	3768-27
μPD411-4	3768-21
μPD411A	3768-47
μPD411A-1	3768-45
μPD411A-2	3768-36
μPD416	★ 4073
	3769-19
μPD416-1	★ 4073
	3769-12
μPD416-2	★ 4073
	3768-111
μPD416-3	★ 4073
	3768-94
μPD416-5	★ 4073
	3768-78
μPD4164-0	★ 4077
	3769-105
μPD4164-1	★ 4077
	3769-115
μPD4164-12	★ 4077
	3769-54
μPD4164-15	★ 4077
	3769-79
μPD4164-2	★ 4077
	3769-40
μPD4164-20	★ 4077
	3769-106
μPD4164-3	★ 4077
	3769-80
μPD421	3777-100
μPD421-1	3777-97
μPD421-2	3777-95
μPD421-3	3777-88
μPD421-5	3777-79
μPD444-3	3776-45
μPD444/6514	3777-13
μPD444/6514-1	3776-107
μPD444/6514-2	3776-87
μPD444/6514-3	3776-46
μPD445L	588-44
	3777-14
μPD445L-1	3777-49
μPD446	★ 4090
	3779-27
μPD446-1	★ 4090
	3779-10
μPD446-2	★ 4090
	3778-108
μPD446-3	★ 4090
	3778-66
μPD449	★ 4093
	3779-28
μPD449-1	★ 4093
	3779-11
μPD449-2	★ 4093
	3778-109
μPD449-3	★ 4093
	3778-67
μPD5101L	588-36
	3773-112
μPD5101L-1	3773-84
μPD5388	3166-93
μPD65002	★ 4809
	4466-52
μPD65003	★ 4809
	4466-50
μPD65010	★ 4809
	4466-54
μPD65020	★ 4809
	4467-2
μPD65040	4463-40
μPD65060	4463-41
μPD65100	4463-42
μPD7001	2628-27
	1345-43
	1354-104
μPD7002	2634-10
	1345-44
	1354-105
μPD7201	★ 1531
	2686-13
	★ 1531
	1345-130
	1347-38
	1349-58
	1353-127
	1354-23
μPD7210	★ 1535
	1351-121
	1355-19
μPD7220	★ 1538
	1352-106
	1353-132
μPD7255	2664-21
μPD7265	★ 1549
	1353-107
μPD731000	★ 4116
	3787-108
μPD73128	★ 4114
	3787-43
μPD738000	3787-103
μPD7501	★ 1578
	1339-60
μPD7502	★ 1578
	1339-61
μPD7503	★ 1578
	1339-62
μPD7506	★ 1578
	1339-52
μPD7507	★ 1578
	1339-53
μPD75078	★ 1578
	1339-54
μPD7508	★ 1578
	1339-55
μPD7508A	★ 1578
	1339-56
	1339-65
μPD7508H	★ 1578
	1339-57
μPD7514	★ 1578
	1339-63
μPD7519	★ 1578
	1339-51
	1339-66
μPD7520	★ 1578
	1339-64
	★ 1578
	1261-10
μPD7527	★ 1578
	1339-71
μPD7528	★ 1578
	1339-58
	1339-67
μPD7537	★ 1578
	1339-68
μPD7538	★ 1578
	1339-59
	1339-69
μPD765	★ 1549
	1344-96
	1345-124
	1346-126
	1353-100
	1353-102
	1353-115
	¶ 273-3
μPD780	1348-49
	1277-22
μPD780-1	1348-50
μPD7800	1277-23
μPD7802	1277-24
μPD7807	★ 1566
	1348-121
	★ 1566
	1277-25
μPD7809	★ 1566
	1348-122
	★ 1566
	1277-26
μPD781	1353-48
μPD7810	★ 1562
	1348-119
	★ 1562
	1277-27
μPD7811	★ 1562
	1348-120
	★ 1562
	1277-28
μPD782	1353-49
μPD78P09	★ 1566
	1348-123
	★ 1566
	1277-29
μPD792	3234-103
μPD794	3234-104
μPD8035L	1344-21
	1277-30
μPD8039L	1344-22
	1277-31
μPD8041	1344-166
	1346-87
	1347-42
μPD8041A	1344-167
μPD8048	1344-61
	1277-32
μPD8049	1344-62
	1277-33
μPD8080A	1345-36
μPD8080A-1	1345-37
μPD8080A-2	1345-38
μPD8080AF	1277-34
μPD8085A	1346-100
μPD8085A-2	1346-101
	1277-35
μPD8086	1349-19
μPD8086-2	1287-4
μPD8088	1283-22
μPD80C35	★ 1571
	1344-23
	★ 1571
	1277-36
μPD80C48	★ 1571
	1343-141
	★ 1571
	1277-37
μPD8155	1344-149
	1347-26
μPD8156	1344-150
	1347-27
μPD8243	1344-105
	1346-133
μPD8251	2686-23
	1344-114
	1346-14
	1346-145
μPD8251A	1346-15
μPD8253	1344-126
	1346-42
	1347-6
μPD8253-5	1344-127
	1346-43
	1347-7
μPD8255	1344-131
	1346-51
μPD8255A-5	1344-132
	1346-52
	1347-11
μPD8257	1346-30
	1346-157
μPD8257-5	1346-31
	1346-158
PD8259	1344-121
	1346-36
	1346-165
μPD8259-5	1344-122
	1346-37
	1346-166
μPD8259A	1349-64
μPD8279-5	1345-158
μPD8282	1349-99
μPD8283	1349-92
μPD8284	1349-50
μPD8286	1349-85
μPD8287	1349-78
μPD8288	1349-42
μPD833	3166-94
μPD8355	1344-155
	1347-34
	1347-36
μPD8741A	1346-88
	1347-43
μPD8748	1344-2
	1277-38
μPD8755A	1344-134
	1346-123
	1347-14

OKI Semiconductor

Device	Page-Line
EASE	★ 4118
MSL2312	★ 4118
MSL912R	★ 4118
	2663-112
MSL915R	★ 4118
	2663-113
MSL916R	2663-114
MSL917R	★ 4118
	2663-115
MSL9362	★ 4118
	3169-37
MSL9363	★ 4118
	3169-38
MSL9510R	★ 4118
	2663-116
MSL9511R	★ 4118
	2663-117
MSL9650	★ 4118
	3755-24
MSL966	★ 4118
MSL9662	★ 4118
	3783-115
MSL9663	★ 4118
	3783-116
MSL9664	★ 4118
	3783-113
MSL9665	★ 4118
	3783-114
MSM2114	★ 4118
MSM2128	★ 4118
MSM2708	★ 4118
MSM2716	★ 4118
MSM2764A	★ 4118
	3766-114
MSM28101	★ 4118
MSM2816	3758-76
MSM2916	★ 4118
MSM2932	★ 4118
MSM2964	★ 4118
MSM37256	★ 4118
MSM3764-12	★ 4118
	3769-55
MSM3764-15	★ 4118
	3769-81
MSM3764-20	★ 4118
	3769-107
MSM38128	★ 4118
MSM3914A	★ 4118
	2667-15
MSM5104	★ 4118
MSM5114-2	★ 4118
	3776-47
MSM5115	★ 4118
MSM5128	★ 4118
	3778-110
MSM5188	★ 4118
MSM5204	★ 4118
MSM5205	★ 4118
	3169-107
MSM5218	★ 4118
	3169-82
MSM5219	2663-65
MSM53256	★ 4118
MSM5509	★ 4118
	3166-139
MSM5524	★ 4118
	3166-114
MSM5525	★ 4118
	3167-141
MSM5526	3167-136
MSM5528	★ 4118
	3166-140
MSM5529	3166-141
MSM5550	★ 4118
MSM5557	★ 4118
	3166-120
MSM5558	★ 4118
	3166-142
MSM55581	★ 4118
MSM5803	★ 4118
	3167-30
MSM5816	★ 4118
	3173-68
MSM5819	★ 4118
	3173-53
MSM58282	★ 4118
	1338-125
MSM58283	★ 4118
	1338-126
MSM58292	★ 4118
	1338-127
MSM58293	★ 4118
	1338-128
MSM5832	★ 4118
MSM58321	★ 4118
	1338-121
MSM58371	★ 4118
	1338-124
MSM5838	★ 4118
	1338-123
MSM5839	★ 4118
	1338-122
MSM5840	★ 4118
	1261-11
MSM5840RS	★ 4118
	1261-12
MSM5842	★ 4118
	1338-119
MSM58421	★ 4118
	1338-117
MSM58421GS	★ 4118
	1261-13
MSM58422	★ 4118
	1338-118
MSM584223RS	1261-14
MSM5845	★ 4118
	1338-120
	★ 4118
	1261-15
MSM5846	★ 4118
MSM6202	★ 4118
	3169-108
MSM6910	★ 4118
MSM6912	★ 4118
	3217-83
MSM6917	★ 4118
	3216-119
MSM8085	★ 4118
MSM80C35	★ 4118
	1344-24
	★ 4118
	1277-39
MSM80C39	★ 4118
	1344-25
	★ 4118
	1277-40
MSM80C48	★ 4118
	1344-63
	★ 4118
	1277-41
MSM80C49	★ 4118
	1344-64
MSM80C85A	★ 4118
	1279-1
MSM8155	1347-28
MSM81C55	★ 4118
MSM8255A	1346-53
MSM82C12	★ 4118
MSM82C53	★ 4118
MSM82C55	★ 4118
MSM8755	1346-124

Oliver Advanced Engineering

Device	Page-Line
DatatapTM	4355-7
OMNI64	★ 4401
UPP-2700	4355-8
UPP-28000-ZIF	★ 4401
	4355-9
UPP-28000 Scoop	★ 4401
	4355-10

Panasonic

Device	Page-Line
AN103	3214-58
AN1324	★ 3556
AN1339	★ 3557
AN1358	★ 3556
AN1393	★ 3557
AN1458	★ 3556
AN1741	★ 3556
AN214	3164-92
AN217P	3168-2
AN236	3170-137
AN240P	3171-164
AN241	3171-165
AN253	3168-3
AN262	3169-121
AN278	3168-39
AN295	3171-67
AN301	3170-20
AN302	3170-16
AN303	3170-17
AN304	3170-10
AN305	3170-5
AN316	3170-8
AN318	3170-21
AN321	3170-37
AN337	3170-6
AN340	3171-166
AN360	3165-128
AN362	3168-139
AN366	3168-4
AN370	3165-129
AN374	3164-93
AN377	3168-40
AN4250	★ 3556
AN5010	3170-97
AN5011	3170-98

¶ Indicates page number in Application Directory.
★ Indicates additional data is provided on the page noted.

IC MASTER

Panasonic (Cont'd)

Device	Page-Line
AN5111	3172-127
AN5120	3172-128
AN5210	3171-167
AN5220	3171-168
AN5250	3171-169
AN5260	3171-170
AN5310	3170-138
AN5311	3170-139
AN5320	3170-140
AN5330	3170-141
AN5410	3171-68
AN5411	3171-69
AN5430	3171-70
AN5431	3171-71
AN5435	3171-72
AN5510	3172-75
AN5512	3172-76
AN5520	3172-77
AN5620	3170-142
AN5630	3170-143
AN5700	3172-53
AN5710	3172-129
AN5720	3172-130
AN5730	3171-171
AN5750	3171-91
AN5760	3171-92
AN605	641-121
AN607	3156-96
AN608	3156-97
AN610	3232-80
AN612	3232-81
AN6135	3164-68
AN614	3170-46
AN616	3170-47
AN6249	3169-152
AN6250	3169-153
AN6251	3170-1
AN6300	3170-25
AN6320	3170-14
AN6321	3170-12
AN6330	3170-15
AN6331	3170-13
AN6341	3170-22
AN6342	3170-23
AN6344	3170-24
AN6550	★ **3556**
	3208-40
AN6551	★ **3556**
	3208-41
AN6552	★ **3556**
	3208-42
AN6554	★ **3556**
AN6554N	★ **3556**
AN6555	★ **3556**
AN6556	★ **3556**
AN6557	★ **3556**
AN6558	★ **3556**
AN6561	★ **3556**
AN6562	★ **3556**
AN6564	★ **3556**
AN6570	★ **3556**
AN6571	★ **3556**
AN6572	★ **3556**
AN6573	★ **3556**
AN6593	★ **3556**
AN6780	3220-5
AN6811	640-82
AN6820	640-120
AN6821	640-121
AN6875	2661-4
AN6880	3238-91
AN6912	★ **3557**
	3163-16
AN6913	★ **3557**
AN6914	★ **3557**
AN6915	★ **3557**
AN6916	★ **3557**
AN6918	★ **3557**
AN7110	3164-94
AN7114	3164-95
AN7115	3164-96
AN7120	3164-97
AN7130	3164-98
AN7145H	3165-104
AN7145L	3165-76
AN7145M	3165-89
AN7146H	3165-105
AN7146M	3165-77
AN7156	3165-90
AN7156N	3165-106
AN7213	3168-31
AN7218	3167-146
AN7266	3167-147
AN7311	3165-164
AN7800	★ **3557**
AN78L00	★ **3557**
AN78M00	★ **3557**
AN7900	★ **3557**
AN829	3232-64
AN829S	3232-65
DN6835	★ **3558**
	641-62
	★ **3558**
	3234-14
DN6836	★ **3558**
DN6837	★ **3558**
	641-63
	★ **3558**
	3234-15
DN6838	★ **3558**
	641-64
DN6839	★ **3558**
	641-65
DN74LS00	★ **826**
	★ **834**
	622-1
DN74LS01	★ **826**
	★ **834**
	621-129
DN74LS02	★ **826**
	★ **834**
	624-94
DN74LS03	★ **826**
	★ **834**
	621-130
DN74LS04	★ **826**
	★ **834**
	607-89
DN74LS05	★ **826**
	★ **834**
	606-150
DN74LS08	★ **826**
	★ **834**
	619-127
DN74LS09	★ **826**
	★ **834**
	619-68
DN74LS10	★ **826**
	★ **834**
	620-162
DN74LS107	★ **826**
	★ **834**
	617-143
DN74LS109	★ **826**
	★ **834**
	617-72
DN74LS11	★ **826**
	★ **834**
	619-26
DN74LS112	★ **826**
	★ **834**
	618-66
DN74LS113	★ **826**
	★ **834**
	618-21
DN74LS114	★ **826**
	★ **834**
	618-97
DN74LS12	★ **826**
	★ **834**
	620-116
DN74LS123	★ **826**
	★ **834**
	630-177
DN74LS125A	★ **826**
	★ **834**
	606-7
DN74LS13	★ **826**
	★ **834**
	637-149
DN74LS132	★ **826**
	★ **834**
	638-38
DN74LS136	★ **826**
	★ **834**
	624-142
DN74LS138	★ **827**
	613-65
DN74LS139	★ **827**
	612-145
DN74LS14	★ **826**
	★ **834**
	638-73
DN74LS145	★ **827**
	612-63
DN74LS15	★ **826**
	★ **834**
	618-162
DN74LS151	★ **827**
	629-176
DN74LS153	★ **827**
	628-60
DN74LS155	★ **827**
	613-28
DN74LS156	★ **827**
	612-180
DN74LS157	★ **827**
	629-39
DN74LS158	★ **827**
	628-147
DN74LS160A	★ **827**
	610-60
DN74LS161A	★ **827**
	608-28
DN74LS162	★ **827**
	610-108
DN74LS163A	★ **827**
	608-74
DN74LS164	★ **827**
	632-48
DN74LS170	★ **827**
	627-21
DN74LS173	★ **827**
	615-140
DN74LS174	★ **827**
	615-178
DN74LS175	★ **827**
	615-65
DN74LS190	★ **827**
	611-99
DN74LS191	★ **827**
	609-63
DN74LS192	★ **827**
	611-64
DN74LS193	★ **827**
	609-110
DN74LS194A	★ **827**
	631-176
DN74LS195A	★ **827**
	631-69
DN74LS196	★ **827**
	610-10
DN74LS197	★ **827**
	607-155
DN74LS20	★ **826**
	★ **834**
	620-79
DN74LS21	★ **826**
	★ **834**
	618-141
DN74LS22	★ **826**
	★ **834**
	620-24
DN74LS240	★ **826**
	★ **834**
	634-115
DN74LS241	★ **826**
	★ **834**
	634-119
DN74LS244	★ **826**
	★ **834**
	634-118
DN74LS245	★ **826**
	★ **834**
	635-122
DN74LS251	★ **827**
	630-55
DN74LS253	★ **827**
	628-11
DN74LS257A	★ **827**
	628-181
DN74LS258A	★ **827**
	628-108
DN74LS26	★ **826**
	★ **834**
	621-27
DN74LS260	★ **826**
	★ **834**
	623-158
DN74LS266	★ **826**
	★ **834**
	625-40
DN74LS27	★ **826**
	★ **834**
	624-14
DN74LS279	★ **827**
	625-145
DN74LS28	★ **826**
	★ **834**
	624-95
DN74LS283	★ **826**
	★ **834**
	605-105
DN74LS290	★ **827**
	609-155
DN74LS293	★ **827**
	608-135
DN74LS30	★ **826**
	★ **834**
	622-49
DN74LS32	★ **826**
	★ **834**
	623-113
DN74LS33	★ **826**
	★ **834**
	624-33
DN74LS365A	★ **826**
	★ **834**
	606-68
DN74LS366A	★ **826**
	★ **834**
	607-21
DN74LS367A	★ **826**
	★ **834**
	606-69
DN74LS368A	★ **826**
	★ **834**
	607-22
DN74LS37	★ **826**
	★ **834**
	621-62
DN74LS373	★ **826**
	★ **834**
	626-77
DN74LS38	★ **826**
	★ **834**
	621-11
DN74LS386	★ **826**
	★ **834**
	625-3
DN74LS390	★ **827**
	610-139
DN74LS393	★ **827**
	608-92
DN74LS395A	★ **827**
	631-134
DN74LS40	★ **826**
	★ **834**
	619-179
DN74LS42	★ **827**
	612-100
DN74LS490	★ **827**
	610-140
DN74LS51	★ **826**
	★ **834**
	622-142
DN74LS54	★ **826**
	★ **834**
	623-46
DN74LS55	★ **826**
	★ **834**
	622-178
DN74LS73	★ **826**
	★ **834**
	617-144
DN74LS74A	★ **827**
	615-20
DN74LS75	★ **827**
	625-106
DN74LS76	★ **826**
	★ **834**
	617-178
DN74LS78	★ **826**
	★ **834**
	617-92
DN74LS83A	★ **826**
	★ **834**
	605-106
DN74LS85	★ **826**
	★ **834**
	603-60
DN74LS86	★ **826**
	★ **834**
	625-4
DN74LS90	★ **827**
	609-156
DN74LS92	★ **827**
	611-130
DN74LS93	★ **827**
	608-136
DN74LS95B	★ **827**
	631-104
DN75LS15	618-163
DN803	3158-148
DN834	★ **3558**
	641-66
DN835	★ **3558**
	641-67
	★ **3558**
	3234-16
DN837	★ **3558**
	641-68
DN838	★ **3558**
	641-69
DN839	★ **3558**
	641-70
DN850	631-21
DN851	608-168
DN852	612-25
MEL1024K	3234-54
MEL1024KV	3234-55
MEL128	3234-56
MEL512KV	3234-57
MEL64A	3234-58
MEL864A	3234-59
MN115P	640-79
MN116P	640-80
MN1201	586-28
	1337-121
MN1202	1337-120
MN1203	3771-93
MN1204A	1337-118
MN1204B	1337-119
MN1205A	2662-116
MN1205E	2662-100
MN1205F	2662-115
MN1205H	2664-5
MN1205P	2662-101
MN1205Q	2662-102
MN1206	1337-116
MN1207	1337-117
MN1208	3758-13
MN1400	★ **1587**
	1337-108
	¶ 274-7
	★ **1587**
	1261-16
	¶ 274-7
MN1402	★ **1587**
	1337-109
	¶ 274-7
	★ **1587**
	1261-17
	¶ 274-7
MN1403	★ **1587**
	1337-110
	★ **1587**
	1261-18
MN1404	★ **1587**
	1337-111
	★ **1587**
	1261-19
MN1405	★ **1587**
	1337-112
	★ **1587**
	1261-20
MN1430	★ **1587**
	1337-113
	★ **1587**
	1261-21
MN1432	★ **1587**
	1337-114
	★ **1587**
	1261-22
MN1435	★ **1587**
	1337-115
	★ **1587**
	1261-23
MN1450	★ **1588**
	1337-101
	★ **1588**
	1261-24
MN1453	★ **1588**
	1337-102
	★ **1588**
	1261-25
MN1454	★ **1588**
	1337-103
	★ **1588**
	1261-26
MN1455	★ **1588**
	1337-104
	★ **1588**
	1261-27
MN1498	★ **1588**
	1337-107
	¶ 274-7
	★ **1588**
	1261-28
	¶ 274-7
MN1499	★ **1587**
	★ **1588**
	1337-105
	¶ 274-7
	★ **1587**
	★ **1588**
	1261-29
	¶ 274-7
MN1499A	★ **1587**
	★ **1588**
	1337-106
	¶ 274-7
	★ **1587**
	★ **1588**
	1261-30
	¶ 274-7
MN1541	★ **1589**
	1337-122
	★ **1589**
	1263-1
MN1542	★ **1589**
	1337-123
	★ **1589**
	1263-2
MN1544	★ **1589**
	1337-124
	★ **1589**
	1263-3
MN1562	★ **1589**
	1337-125
	★ **1589**
	1263-4
MN1564	★ **1589**
	1337-126
	★ **1589**
	1263-5
MN1591	★ **1589**
	1337-128
MN1599	★ **1589**
	1337-127
MN1610	1350-105
	1287-5
MN1611	1350-106
	1287-6
MN1630	1350-109
MN1631	1350-110
MN1640	1350-108
MN1650	1350-107
MN1976	3173-102
MN3001	★ **3559**
	3165-181
	3232-40
MN3002	★ **3559**
	3232-52
MN3003	★ **3559**
	3232-42
MN3004	★ **3559**
	3232-53
MN3005	★ **3559**
	3232-51
MN3006	3232-46
MN3007	★ **3559**
	3232-43
MN3008	★ **3559**
	3232-47
MN3009	★ **3559**
	3232-48
MN3010	★ **3559**
	3165-182
	3232-41
MN3011	★ **3559**
	3232-49
MN3012	★ **3559**
	3232-50
MN3101	3232-55
MN3204	3165-183
	3232-44

Arranged alphanumerically from left to right.

© IC MASTER 1984

Panasonic (Cont'd)

Device	Page-Line
MN3207	3165-184
	3232-45
MN4001B	★ 828
	★ 834
	585-48
MN4002B	★ 828
	★ 834
	584-153
MN4007UB	573-151
MN4011B	★ 828
	★ 834
	583-89
MN4012B	★ 828
	★ 834
	582-184
MN4013B	★ 828
	★ 834
	580-57
MN4015B	★ 828
	590-57
MN40161B	★ 828
	★ 834
	574-92
MN4016B	★ 828
	★ 834
	2617-66
MN4017B	★ 828
	★ 834
	576-26
MN4023B	★ 828
	★ 834
	583-34
MN4024B	★ 828
	★ 834
	575-57
MN4025B	★ 828
	★ 834
	584-194
MN4027B	★ 828
	★ 834
	582-27
MN4028B	★ 828
	578-40
MN4029B	★ 828
	★ 834
	578-1
MN4030B	★ 828
	★ 834
	585-131
MN4035B	★ 828
	590-156
MN4040B	★ 828
	★ 834
	575-99
MN4049B	★ 828
	★ 834
	572-97
MN4050B	★ 828
	★ 834
	572-142
MN4052B	★ 828
	2622-86
MN4053B	★ 828
	2619-65
MN4066B	★ 828
	2617-33
MN4066UB	★ 828
	★ 834
	574-5
MN4070B	★ 828
	★ 834
	585-132
MN4071B	★ 828
	★ 834
	584-92
MN4072B	★ 828
	★ 834
	584-36
MN4073B	★ 828
	★ 834
	582-92
MN4075B	★ 828
	★ 834
	584-57
MN4076B	★ 828
	★ 834
	580-102
MN4078B	★ 828
	★ 834
	585-95
MN4081B	★ 828
	★ 834
	582-133
MN4085B	★ 828
	★ 834
	584-1
MN4093B	★ 828
	593-97
MN4164-15	★ 4120
	3769-82
MN4164-20	★ 4120
	3769-108
MN4503B	★ 828
	★ 834
	573-56
MN4511B	580-7
MN4512B	★ 828
	★ 834
	588-191
MN4516B	★ 828
	★ 834
	574-140
MN4518B	★ 828
	★ 834
	577-28
MN4520B	★ 828
	★ 834
	575-10
MN4528B	★ 828
	589-136
MN4538B	589-137
MN4539B	★ 828
	★ 834
	588-58
MN4556B	578-93
MN4585B	571-115
MN5101	3773-120
MN512	3234-60
MN5750	3166-25
MN6004	3167-69
MN6005	3167-70
MN6021	3169-39
MN6025	3169-40
MN6031	640-48
MN6032	641-54
MN6040	3214-123
MN6040A	3214-124
MN6040Z	3214-125
MN6044	3171-61
MN6049	3171-62
MN6057	3166-143
MN6059	3166-144
MN6061A	3170-7
MN6063	3170-54
MN6064	3170-55
MN6076	3166-95
MN6080	3166-65
MN6092	3166-96
MN6093	3166-145
MN6142	3214-126
MN6200	3166-146
MN6251	3166-147
MN6252	3166-148
MN74HC00	★ 830
MN74HC02	★ 830
	585-49
MN74HC04	★ 830
MN74HC08	★ 830
	582-134
MN74HC10	★ 830
	583-35
MN74HC107	★ 830
	581-180
MN74HC109	★ 830
	582-28
MN74HC11	★ 830
	582-93
MN74HC112	★ 830
	581-158
MN74HC123	★ 830
	589-103
MN74HC133	★ 830
	583-163
MN74HC138	★ 830
	578-160
MN74HC139	★ 830
	578-115
MN74HC14	★ 830
	593-137
MN74HC151	★ 830
	588-171
MN74HC154	★ 830
	579-80
MN74HC157	★ 830
	588-89
MN74HC158	★ 830
	588-106
MN74HC160	★ 830
	576-109
MN74HC161	★ 830
	574-93
MN74HC163	★ 831
	574-57
MN74HC174	★ 831
	580-166
MN74HC175	★ 831
MN74HC192	★ 831
	576-151
MN74HC193	★ 831
	574-141
MN74HC20	★ 830
	582-185
MN74HC21	★ 830
MN74HC221	★ 831
	589-138
MN74HC240	★ 831
	594-19
MN74HC241	★ 831
	594-55
MN74HC242	★ 831
	593-60
MN74HC243	★ 831
	593-61
MN74HC244	★ 831
	593-173
MN74HC245	★ 831
	594-143
MN74HC266	★ 831
	585-176
MN74HC27	★ 830
	585-1
MN74HC273	★ 831
	581-2
MN74HC280	★ 831
MN74HC30	★ 830
	583-140
MN74HC32	★ 830
	584-93
MN74HC365	★ 831
	573-57
MN74HC366	★ 831
	573-9
MN74HC367	★ 831
	573-58
MN74HC368	★ 831
	573-10
MN74HC373	★ 831
	586-147
MN74HC374	★ 831
	581-92
MN74HC390	★ 831
	577-53
MN74HC393	★ 831
	575-30
MN74HC4002	★ 831
	584-154
MN74HC4040	★ 831
	575-100
MN74HC4049	★ 831
	572-98
MN74HC4050	★ 831
	572-143
MN74HC4051	★ 831
	2623-41
MN74HC4052	★ 831
	2622-87
MN74HC4053	★ 831
	2619-66
MN74HC4066	★ 831
	2617-34
MN74HC4067	★ 831
MN74HC4075	★ 831
	584-58
MN74HC4078	★ 831
	585-96
MN74HC42	★ 830
	578-41
MN74HC51	★ 830
	584-16
MN74HC74	★ 830
	580-58
MN74HC75	★ 830
	586-58
MN74HC76	★ 830
	582-29
MN74HC85	★ 830
	571-116
MN74HC86	★ 830
	585-133
MN8023	3173-31
MN8025	640-58
MN8027	3234-105
OM200	3164-11

Plessey Semiconductors

Device	Page-Line
BAA1000	4475-22
BAA2000	4475-23
CLA1000	★ 4819
	4468-15
CLA1200	★ 4819
	4468-16
CLA1500	★ 4819
	4468-17
CLA2100	★ 4819
	4466-1
CLA2300	★ 4819
	4466-2
CLA2500	★ 4819
	4466-3
CLA3000	★ 4819
	4466-29
CLA4000	4462-22
CLA5100	★ 4817
CLA5200	★ 4817
CLA5300	★ 4817
CLA5400	★ 4817
CLA5500	★ 4817
CLA5600	★ 4817
CLA5700	★ 4817
CLA5800	★ 4817
CLA5900	★ 4817
CMOS	★ 4821
	4478-7
	4478-8
	4478-9
MJ1446	3218-114
MJ2812	3757-18
MJ2813	3757-24
MJ2814	3757-19
MJ2841	3757-39
ML920	3169-41
ML922	3169-42
ML926	3169-43
ML928	3169-44
ML929	3169-45
MV2000	★ 4820
MV4330	591-184
MV4332	591-190
MV74SC137	579-8
MV74SC237	579-9
MV74SC239	578-116
MV74SC374	581-93
MV74SC533	587-5
MV74SC563	587-6
MV74SC573	586-148
MV74SC574	581-94
MV8860	3218-134
MV8862	3218-135
MV8863	3218-136
MV8865	3216-38
NJ8811	3214-91
NJ8812	3214-92
SCD1000	4460-15
SCD2000H	4460-16
SCD2000L	4461-40
	4462-24
SCD2000M	4460-43
SCD4000	★ 4815
	4460-17
SL1430	3172-131
SL1431	3172-132
SL1432	3172-133
SL1521	3156-133
	¶ 297-9
	¶ 302-1
SL1522	3156-134
SL1523	3156-135
SL1524	3156-136
SL1525	3156-137
SL1531	3156-129
SL1532	3156-130
SL1550	3156-98
SL2363C	3157-48
SL2364C	3157-49
SL3045	3157-12
SL3046	3157-13
SL3127	3157-175
SL3145	3157-14
SL360	3157-71
SL362	3157-72
	¶ 298-4
SL440	3173-54
	3235-5
	¶ 311-5
SL441	3239-96
SL443	3239-97
SL445A	3235-137
SL446	3239-98
SL490	3169-46
SL521	3156-138
	¶ 297-8
SL523	3156-139
SL531C	3156-131
SL532C	3156-132
SL541	3156-99
SL550	3156-100
SL560	3156-101
	¶ 299-18
SL561	3165-130
SL561B	3165-131
SL561C	3165-132
SL610C	3156-102
SL611C	3156-103
SL612C	3156-104
SL620C	3155-5
SL621C	3155-4
SL623C	3167-125
SL6270	3155-6
SL6310	3155-138
SL640C	3232-82
SL641C	3232-83
SL650	3215-19
	¶ 310-8
SL651	3215-18
	¶ 310-8
SL652	3214-27
SL6640	3168-105
	¶ 301-7
SL792	3216-1
SL793	3216-2
SL952	3172-56
SP1450B	3218-43
SP1455B	3218-44
SP1648	600-54
	¶ 302-1
SP1650B	600-57
SP1658	600-50
	3214-155
SP1660B	600-41
SP1670B	600-33
SP1692B	600-59
SP16F60	600-42
SP4632	3214-83
SP4642	3214-80
SP4652	3214-81
SP4653	3214-82
SP4742	3214-78
SP4780	3214-79
SP8600A	640-87
SP8600B	640-88
SP8602A	640-73
SP8602B	640-74
SP8605B	640-75
SP8605M	640-76
SP8606B	640-70
SP8606M	640-71
SP8607A	640-77
SP8607B	640-78
SP8610	600-18
SP8611A	600-19
SP8611B	600-20
SP8612B	★ 3561
SP8613	640-83
SP8617B	600-21
SP8629	641-26
	3214-66
SP8630A	640-103
SP8630B	640-104
SP8643	3215-69
SP8643B	640-108
SP8647	3215-70
SP8647A	640-109
SP8647B	640-110
SP8655A	641-5
SP8655B	641-6
SP8657A	640-122
SP8657B	641-1
SP8658	641-2
SP8659A	640-117
SP8659B	640-118
SP8665B	640-101
SP8668B	640-102
SP8680	600-27
SP8680A	640-111
SP8680B	640-112
SP8685	3215-71
SP8685A	640-113
SP8685B	640-114
SP8690	3215-72
	¶ 302-1
SP8690A	640-115
	¶ 302-1
SP8690B	640-116
	¶ 302-1
SP8720	640-81
	3215-52
SP8735B	640-96
SP8740	3215-57
SP8740A	640-92
SP8740B	640-93
SP8741	3215-61
SP8741A	640-94
SP8741B	640-95
SP8743	3215-64
SP8743B	640-99
SP8743M	640-100
SP8755A	641-11
SP8755B	641-12
SP8790	3214-6
	¶ 302-1
SP8790A	641-49
	¶ 302-1
	3214-2
	¶ 302-1
SP8790B	641-50
	¶ 302-1
	3214-3
	¶ 302-1
SP8792	3215-84
SP8792A	3215-85
SP8793	3215-76
SP8793A	3215-77
SP8794A	641-51
	3214-4
SP8794B	641-52
	3214-5
SP8901	641-42
	3214-93
	3215-89
SP8906	641-29
	3214-94
	3215-90
SP9685	3161-26
	¶ 300-8
SP9687	3161-27
	¶ 300-8
SP9768	2640-4
SP9770	★ 3071
	2645-27
	2647-40
SW203	3172-35
TAB1042	3211-55
TAB1043	3211-56
TBA120	3168-67
	3171-172
TBA750	3168-68
	3171-173
TDA1085A	3173-55
	¶ 311-3
TDA2085A	3173-56
TDA2532	3170-144
TDA2591	3171-93
TDA3717	3235-16
TDA440	3172-134

Precision Monolithics Inc.

Device	Page-Line
AMP-01	★ 3568
	3155-59
	3176-13
	3181-13
BUF-03A	3174-13
BUF-03B	3174-15
BUF-03E	3174-12
BUF-03F	3174-14

¶ Indicates page number in Application Note Directory.
★ Indicates additional data is provided on the page noted.

IC MASTER

Precision Monolithics Inc. (Cont'd)

Device	Page-Line
CMP-01	3159-14
	¶ 279-8
	¶ 279-9
CMP-01B	3159-15
	¶ 279-8
	¶ 279-9
CMP-01C	3159-31
	¶ 279-8
	¶ 279-9
CMP-01E	3159-16
	¶ 279-8
	¶ 279-9
CMP-02	3159-11
	¶ 315-13
CMP-02B	3159-12
	¶ 315-13
CMP-02C	3159-30
	¶ 315-13
CMP-02E	3159-13
	¶ 315-13
CMP-04B	3162-18
CMP-04F	3162-19
CMP-05A	3159-3
CMP-05B	3159-8
CMP-05E	3159-4
CMP-05F	3159-9
DAC-01	★ **3567**
	2638-21
	¶ 283-3
DAC-01A	★ **3567**
	2638-8
	¶ 283-3
DAC-01B	★ **3567**
	2638-22
	¶ 283-3
DAC-01C	★ **3567**
	2638-23
	¶ 283-3
DAC-01D	★ **3567**
	2638-32
	¶ 283-3
DAC-01F	★ **3567**
	2638-24
	¶ 283-3
DAC-01H	★ **3567**
	2638-25
	¶ 283-3
DAC-02AC	★ **3567**
	2647-27
DAC-02BC	★ **3567**
	2647-28
DAC-02CC	★ **3567**
	2647-30
DAC-02DD	★ **3567**
	2647-36
DAC-03AD	★ **3567**
	2646-24
DAC-03BD	★ **3567**
	2646-25
DAC-03CD	★ **3567**
	2647-6
DAC-03DD	★ **3567**
	2647-17
DAC-05A	★ **3567**
	2647-32
DAC-05B	★ **3567**
	2647-33
DAC-05C	★ **3567**
	2647-34
DAC-05E	★ **3567**
	2647-21
DAC-05F	★ **3567**
	2647-31
DAC-05G	★ **3567**
	2647-35
DAC-06B	★ **3567**
	2647-14
DAC-06C	★ **3567**
	2647-18
DAC-06E	★ **3567**
	2646-23
DAC-06F	★ **3567**
	2647-5
DAC-06G	★ **3567**
	2647-16
DAC-08	2640-24
	¶ 279-5
	¶ 281-6
	¶ 281-7
	¶ 281-15
	¶ 283-6
	¶ 283-7
	¶ 284-2
	¶ 284-9
	¶ 284-16
	¶ 294-9
DAC-08A	2639-20
	¶ 279-5
	¶ 281-6
	¶ 281-7
	¶ 281-15
	¶ 283-6
	¶ 283-7
	¶ 284-2
	¶ 284-9
	¶ 284-16
	¶ 294-9
DAC-08C	2642-30
	¶ 279-5
	¶ 281-6
	¶ 281-7
	¶ 281-15
	¶ 283-6
	¶ 283-7
	¶ 284-2
	¶ 284-9
	¶ 284-16
	¶ 294-9
DAC-08E	2640-40
	¶ 279-5
	¶ 281-6
	¶ 281-7
	¶ 281-15
	¶ 283-6
	¶ 283-7
	¶ 284-2
	¶ 284-9
	¶ 284-16
	¶ 294-9
DAC-08H	2639-21
	¶ 279-5
	¶ 281-6
	¶ 281-7
	¶ 281-15
	¶ 283-6
	¶ 283-7
	¶ 284-2
	¶ 284-9
	¶ 284-16
	¶ 294-9
DAC-100A	★ **3567**
	2644-17
	2644-18
	¶ 279-8
	¶ 279-9
	¶ 283-3
DAC-100B	★ **3567**
	2645-49
	¶ 279-8
	¶ 279-9
	¶ 283-3
DAC-100C	★ **3567**
	2646-32
	2646-33
	¶ 279-8
	¶ 279-9
	¶ 283-3
DAC-100D	★ **3567**
	2647-11
	2647-12
	¶ 279-8
	¶ 279-9
	¶ 283-3
DAC-10B	★ **3567**
	2643-51
DAC-10C	★ **3567**
	2644-1
DAC-10F	★ **3567**
	2644-2
DAC-10G	★ **3567**
	2644-3
	2647-15
DAC-1408A-6	2642-46
DAC-1408A-7	2642-38
DAC-1408A-8	2641-12
DAC-1508A-8	2641-13
DAC-18	★ **3567**
DAC-208A	★ **3567**
	2643-31
DAC-208B	★ **3567**
	2643-33
DAC-208E	★ **3567**
	2643-32
DAC-208F	★ **3567**
	2643-34
DAC-20C	★ **3567**
	2643-29
	¶ 281-5
	¶ 283-6
	¶ 284-16
DAC-210A	★ **3567**
	2647-22
DAC-210B	★ **3567**
	2647-23
DAC-210E	★ **3567**
	2647-24
DAC-210F	★ **3567**
	2647-29
DAC-210G	★ **3567**
	2647-26
DAC-312B	★ **3567**
	2655-23
DAC-312F	★ **3567**
	2655-24
DAC-78F	2647-20
DAC-808A	★ **3567**
	1354-90
DAC-808B	★ **3567**
	1354-91
DAC-808E	★ **3567**
	1354-92
DAC-808F	★ **3567**
	1354-93
DAC-808G	★ **3567**
	1354-94
DAC-86C	★ **3567**
	2643-26
	2647-44
	2656-36
	¶ 281-2
	¶ 286-7
DAC-86E	★ **3567**
	2643-21
	2647-43
	2656-33
	¶ 281-2
	¶ 286-7
DAC-888A	★ **3567**
	2639-44
DAC-888B	★ **3567**
	2641-6
DAC-888E	★ **3567**
	2639-45
DAC-888F	★ **3567**
	2641-7
DAC-88C	★ **3567**
	2643-27
	2647-45
DAC-88E	★ **3567**
	2643-22
	2647-41
DAC-89C	★ **3567**
	2643-28
	2647-46
DAC-89E	★ **3567**
	2643-23
	2647-42
DMX-88E	2623-95
DMX-88F	2623-97
GAP-01A	3232-60
GAP-01B	3232-61
GAP-01E	3232-62
GAP-01F	3232-63
MAT-01	3157-51
	¶ 307-11
MAT-01A	3157-52
	¶ 307-11
MAT-01F	3157-53
	¶ 307-11
MAT-01G	3157-54
	¶ 307-11
MAT-01H	3157-55
	¶ 307-11
MAT-02A	★ **3569**
	3157-73
MAT-02B	★ **3569**
	3157-74
MAT-02E	★ **3569**
	3157-75
MAT-02F	★ **3569**
	3157-76
MUX-08A	2623-90
	¶ 290-5
MUX-08B	2623-96
	¶ 290-5
MUX-08E	2623-88
	¶ 290-5
MUX-08F	2623-93
	¶ 290-5
MUX-16A	2624-83
	¶ 290-5
MUX-16B	2624-85
	¶ 290-5
MUX-16E	2624-84
	¶ 290-5
MUX-16F	2624-86
	¶ 290-5
MUX-24A	2623-6
	¶ 290-5
MUX-24B	2623-10
	¶ 290-5
MUX-24E	2623-7
	¶ 290-5
MUX-24F	2623-11
	¶ 290-5
MUX-28A	2624-30
	¶ 290-5
MUX-28B	2624-32
	¶ 290-5
MUX-28E	2624-31
	¶ 290-5
MUX-28F	2624-33
	¶ 290-5
MUX-88E	2623-89
	¶ 290-5
MUX-88F	2623-94
	¶ 290-5
OP-01C	★ **3566**
	3196-15
OP-01E	★ **3566**
	3191-4
OP-01F	★ **3566**
	3191-5
OP-01G	★ **3566**
	3196-16
OP-01H	★ **3566**
	3187-23
OP-02	★ **3566**
	3175-32
	3191-9
OP-02A	★ **3566**
	3187-1
OP-02B	★ **3566**
	3196-22
OP-02C	★ **3566**
	3191-10
OP-02D	★ **3566**
	3196-23
OP-02E	★ **3566**
	3187-2
OP-04	★ **3566**
	3205-29
OP-04A	★ **3566**
	3204-32
OP-04B	★ **3566**
	3206-57
OP-04C	★ **3566**
	3205-30
OP-04D	★ **3566**
	3206-58
OP-04E	★ **3566**
	3204-33
OP-05	★ **3566**
	3186-41
	¶ 294-9
	¶ 295-16
OP-05A	★ **3566**
	3183-56
	¶ 294-9
	¶ 295-16
OP-05C	★ **3566**
	3188-59
	¶ 294-9
	¶ 295-16
OP-05E	★ **3566**
	3186-47
	¶ 294-9
	¶ 295-16
OP-06A	★ **3566**
	3183-13
OP-06B	★ **3566**
	3187-10
OP-06F	★ **3566**
	3187-11
OP-06G	★ **3566**
	3189-2
OP-07	★ **3566**
	3182-44
	¶ 295-4
	¶ 296-5
OP-07A	★ **3566**
	3181-28
	¶ 295-4
	¶ 296-5
OP-07C	★ **3566**
	3203-43
	¶ 295-4
	¶ 296-5
OP-07D	★ **3566**
	3184-11
	¶ 295-4
	¶ 296-5
OP-07E	★ **3566**
	3182-56
	¶ 295-4
	¶ 296-5
OP-08	★ **3566**
	3206-47
OP-08A	★ **3566**
	3183-47
OP-08B	★ **3566**
	3185-1
OP-08C	★ **3566**
	3188-40
OP-08E	★ **3566**
	3183-48
OP-08F	★ **3566**
	3185-2
OP-08G	★ **3566**
	3188-41
OP-09A	★ **3566**
	3210-18
OP-09B	★ **3566**
	3210-41
OP-09C	★ **3566**
	3211-57
OP-09E	★ **3566**
	3210-19
OP-09F	★ **3566**
	3210-42
OP-10	3189-11
	¶ 292-12
	¶ 307-11
OP-10A	3189-12
	¶ 292-12
	¶ 307-11
OP-10C	3204-57
	¶ 292-12
	¶ 307-11
OP-10E	3189-13
	¶ 292-12
	¶ 307-11
OP-11A	★ **3566**
	3210-20
OP-11B	★ **3566**
	3210-43
OP-11E	★ **3566**
	3210-21
OP-11F	★ **3566**
	3210-44
OP-12	★ **3566**
	3206-48
OP-12A	★ **3566**
	3183-45
OP-12B	★ **3566**
	3184-58
OP-12C	★ **3566**
	3188-36
OP-12E	★ **3566**
	3183-46
OP-12F	★ **3566**
	3184-59
OP-12G	★ **3566**
	3188-37
OP-14	★ **3566**
	3175-5
	¶ 279-5
OP-14A	★ **3566**
	3204-34
	¶ 279-5
OP-14B	★ **3566**
	3207-7
	¶ 279-5
OP-14C	★ **3566**
	3205-31
	¶ 279-5
OP-14D	★ **3566**
	3206-59
	¶ 279-5
OP-14E	★ **3566**
	3204-35
	¶ 279-5
OP-15A	★ **3566**
	3185-56
	¶ 284-16
OP-15B	★ **3566**
	3188-20
	¶ 284-16
OP-15C	★ **3566**
	3192-35
	¶ 284-16
OP-15E	★ **3566**
	3185-57
	¶ 284-16
OP-15F	★ **3566**
	3188-21
	¶ 284-16
OP-15G	★ **3566**
	3192-36
	¶ 284-16
OP-16A	★ **3566**
	3185-60
	¶ 284-16
OP-16B	★ **3566**
	3188-24
	¶ 284-16
OP-16C	★ **3566**
	3192-39
	¶ 284-16
OP-16E	★ **3566**
	3186-1
	¶ 284-16
OP-16F	★ **3566**
	3188-25
	¶ 284-16
OP-16G	★ **3566**
	3192-40
	¶ 284-16
OP-17A	★ **3566**
	3185-52
	¶ 284-16
OP-17B	★ **3566**
	3188-16
	¶ 284-16
OP-17C	★ **3566**
	3192-31
	¶ 284-16
OP-17E	★ **3566**
	3185-53
	¶ 284-16
OP-17F	★ **3566**
	3188-17
	¶ 284-16
OP-17G	★ **3566**
	3192-32
	¶ 284-16
OP-207A	★ **3566**
	3183-1
OP-207B	★ **3566**
	3183-2
OP-207E	★ **3566**
	3184-16
OP-207F	★ **3566**
	3184-17
OP-20B	★ **3566**
	3182-63
	¶ 295-3
OP-20C	★ **3566**
	3184-21
	¶ 295-3
OP-20F	★ **3566**
	3182-64
	¶ 295-3
OP-20G	★ **3566**
	3184-22
	¶ 295-3
OP-20H	★ **3566**
	3185-7
	¶ 295-3
OP-215B	★ **3566**
	3180-1
	3205-37

Arranged alphanumerically from left to right.

© IC MASTER 1984

Precision Monolithics Inc. (Cont'd)

Device	Page-Line
OP-215C	★ 3566
	3180-2
	3206-21
OP-215E	★ 3566
	3188-31
OP-215F	★ 3566
	3180-3
	3205-38
OP-215G	★ 3566
	3180-4
	3206-22
OP-21A	★ 3566
	3184-13
OP-21B	★ 3566
	3183-38
OP-21E	★ 3566
	3184-14
OP-21F	★ 3566
	3183-39
OP-21G	★ 3566
	3184-28
OP-220	★ 3566
	3180-40
OP-220A	★ 3566
	3203-45
OP-220B	★ 3566
	3203-57
OP-220C	★ 3566
	3204-30
OP-220E	★ 3566
	3203-46
OP-220F	★ 3566
	3203-58
OP-220G	★ 3566
	3204-31
OP-220H	★ 3566
	3204-54
OP-221	3180-41
OP-221A	3203-47
OP-221B	3204-1
OP-221C	3204-27
OP-221E	3203-48
OP-221F	3204-2
OP-221G	3204-28
OP-227A	★ 3566
	3203-27
OP-227B	★ 3566
	3203-37
OP-227C	★ 3566
	3203-51
OP-227E	★ 3566
	3203-28
OP-227F	★ 3566
	3203-38
OP-227G	★ 3566
	3203-52
OP-22A	★ 3566
	3185-10
OP-22B	★ 3566
	3187-18
OP-22H	★ 3566
	3188-53
OP-27A	★ 3566
	3181-48
OP-27B	★ 3566
	3182-28
OP-27C	★ 3566
	3183-20
OP-27E	★ 3566
	3181-49
OP-27F	★ 3566
	3182-29
OP-27G	★ 3566
	3183-18
OP-32	★ 3566
	3195-36
OP-32A	★ 3566
	3185-6
OP-32B	★ 3566
	3186-59
OP-32E	★ 3566
	3185-5
OP-32F	★ 3566
	3186-60
OP-32G	★ 3566
	3188-42
OP-37A	★ 3566
	3181-41
OP-37B	★ 3566
	3182-36
OP-37C	★ 3566
	3183-21
OP-37E	★ 3566
	3181-42
OP-37F	★ 3566
	3182-37
OP-37G	★ 3566
	3183-22
OP-420B	★ 3566
	3180-99
OP-420C	★ 3566
	3180-100
OP-420F	★ 3566
	3180-101
OP-420G	★ 3566
	3180-102
OP-421B	★ 3566
	3210-29
OP-421C	★ 3566
	3211-5
OP-421F	★ 3566
	3210-30
OP-421G	★ 3566
	3211-6
OP-421H	★ 3566
	3212-41
OP-432	★ 3570
PKD-01	3235-126
PM-108	★ 3566
	3190-44
PM-108A	★ 3566
	3186-30
PM-139	3162-56
PM-139A	3162-25
PM-155	3175-50
	3186-13
PM-1558	3207-40
PM-155A	3189-46
PM-156	★ 3566
	3195-7
PM-156A	★ 3566
	3189-56
PM-157	★ 3566
	3194-52
PM-157A	★ 3566
	3189-36
PM-208	3190-45
PM-208A	3186-31
PM-2108	★ 3566
	3205-20
PM-2108A	★ 3566
	3204-17
PM-2208	3205-21
PM-2208A	3204-18
PM-2308	3209-14
PM-2308A	3204-24
PM-239	3163-17
PM-239A	3162-38
PM-255	3194-59
PM-256	3195-8
PM-257	3194-53
PM-308	3199-35
PM-308A	3186-56
PM-339	3163-18
PM-339A	3162-39
PM-356	3200-52
PM-356A	3189-57
PM-357	3200-42
PM-357A	3189-37
PM-725	3188-47
PM-725C	3192-1
PM-741	3175-33
	3196-53
PM-741C	3198-49
PM-747	3207-41
PM355	3200-47
PM355A	3189-47
REF-01	3237-83
	¶ 279-5
REF-01A	3237-84
	¶ 279-5
REF-01C	3237-85
	¶ 279-5
REF-01D	3237-86
	¶ 279-5
REF-01E	3237-87
	¶ 279-5
REF-01H	3237-88
	¶ 279-5
REF-02	3236-162
	3238-142
	¶ 315-13
	¶ 315-16
REF-02A	3236-163
	3238-143
	¶ 315-13
	¶ 315-16
REF-02C	3236-164
	3238-144
	¶ 315-13
	¶ 315-16
REF-02D	3236-165
	3238-145
	¶ 315-13
	¶ 315-16
REF-02E	3236-166
	3238-146
	¶ 315-13
	¶ 315-16
REF-02H	3236-167
	3238-147
	¶ 315-13
	¶ 315-16
REF-05A	3236-168
REF-05B	3236-169
REF-10A	3237-89
REF-10B	3237-90
SMP10A	3238-55
SMP10B	3238-56
SMP10E	3238-57
SMP10F	3238-58
SMP11A	3238-59
SMP11B	3238-60
SMP11E	3238-61
SMP11F	3238-62
SMP11G	3238-63
SMP81E	3238-64
SMP81F	3238-65
SW-05B	2616-25
SW-05F	2616-33
SW-05G	2616-34
SW-06B	2621-12
SW-06F	2621-13
SW-06G	2621-14
SW-201B	2616-66
	2621-15
SW-201F	2616-72
	2621-17
SW-201G	2621-19
SW-202B	2616-67
	2621-16
SW-202F	2616-73
	2621-18
SW-7510A	2617-87
SW-7510B	2617-88
SW-7510E	2617-89
SW-7510F	2617-90
SW-7511A	2617-91
SW-7511B	2617-92
SW-7511E	2617-93
SW-7511F	2617-94
SW01B	2616-68
SW01F	2616-69
SW02B	2616-70
SW02F	2616-71
SW03B	2616-62
SW03F	2616-63
SW04B	2616-64
SW04F	2616-65

Raytheon Semiconductor

Device	Page-Line
19680	★ 4130
2901	1257-12
29610	★ 4130
29611	★ 4131
	3761-49
	3761-48
	3761-68
	3761-69
29611A	★ 4131
	3761-30
29613A	★ 4131
	3760-83
	3760-84
	3760-104
	3760-105
29613C	★ 4131
	3761-56
29613M	★ 4131
	3761-75
29620	★ 4130
29621	★ 4131
29623	★ 4131
	3762-31
29630	★ 4130
29631A	★ 4131
	3763-68
	3763-69
29633A	★ 4131
	3763-70
	3763-71
	3763-80
	3763-81
29633C	★ 4131
	3763-105
29650	★ 4130
29651A	★ 4131
	3764-44
29651C	★ 4131
	3764-57
29651M	★ 4131
	3764-62
29653A	★ 4131
	3764-45
29653C	★ 4131
	3764-58
29653M	★ 4131
	3764-63
29670	★ 4130
29671	★ 4131
	3766-15
	3766-16
	3766-23
	3766-24
29671A	★ 4131
	3766-13
	3766-14
	3766-17
	3766-18
29673	★ 4131
	3766-21
	3766-22
	3766-25
	3766-26
29681	★ 4131
	3765-39
29681A	★ 4131
	3765-1
	3765-2
	3765-29
	3765-30
29683	★ 4131
	3765-41
29683A	★ 4131
	3765-3
	3765-4
	3765-31
	3765-32
29693C	4483-21
29693M	4483-22
CGA12L60	★ 508
	★ 4822
	4462-26
	4462-44
CGA16L68	★ 508
	★ 4822
	4462-27
	4462-45
CGA20L76	★ 508
	★ 4822
	4462-28
	4463-1
CGA24L84	★ 508
	★ 4822
	4462-29
	4463-2
CGA8L48	★ 508
	★ 4822
	4462-25
	4462-43
DAC-08	★ 3591
	2640-25
DAC-08A	★ 3591
	2639-22
DAC-08C	★ 3591
	2642-31
DAC-08E	★ 3591
	2640-41
DAC-08H	★ 3591
	2639-23
DAC-10B	★ 3587
	2645-28
DAC-10C	★ 3587
	2645-29
DAC-10F	★ 3587
	2645-30
DAC-10G	★ 3587
	2645-42
DAC-565	★ 3589
DAC-6012AC	★ 3590
	2655-19
DAC-6012AM	★ 3590
	2655-20
DAC-6012C	★ 3590
	2655-21
DAC-6012M	★ 3590
	2655-22
HA4741-2	3210-58
HA4741-5	3211-46
HA4741-8	3210-11
LH2101A	3205-35
LH2111	3161-8
LM101A	3175-20
	3191-38
LM107	3191-22
LM111	3159-45
LM124	3180-57
LM13600	3156-10
LM13600A	3156-11
LM139	3162-57
LM146	3210-13
LM148	3211-34
LM149	3211-37
LM224	3180-58
LM239	3163-19
LM246	3210-14
LM248	3212-33
LM249	3212-39
LM2900	3180-94
LM2901	3163-33
LM2902	3180-11
LM301A	3196-36
LM307	3196-35
LM311	3160-32
LM324	3180-59
LM329	3237-21
LM339	3163-20
LM346	3210-15
LM348	3212-34
LM349	3212-40
LM3900	3180-95
OP-05	★ 3592
	3186-38
OP-05A	★ 3592
	3183-52
OP-05C	★ 3592
	3188-54
OP-05E	★ 3592
	3186-42
OP-07	★ 3592
	3187-24
OP-07A	★ 3592
	3184-48
OP-07C	★ 3592
	3184-2
OP-07D	★ 3592
	3184-7
OP-07E	★ 3592
	3187-25
OP-27A	★ 3592
	3181-50
OP-27B	★ 3592
	3182-30
OP-27C	★ 3592
	3183-25
OP-27E	★ 3592
	3181-51
OP-27F	★ 3592
	3182-31
OP-27G	★ 3592
	3183-26
OP-37A	★ 3592
	3181-40
OP-37B	★ 3592
	3182-22
OP-37C	★ 3592
	3183-15
OP-37E	★ 3592
	3184-51
OP-37F	★ 3592
	3182-23
OP-37G	★ 3592
	3183-16
RC1437	3209-18
RC1458	3175-6
RC2041	★ 3592
	3206-14
RC2043	★ 3592
	3206-16
RC2505	604-156
RC3078	★ 3592
	3194-11
RC3078A	★ 3592
	3193-32
RC3301	3180-91
RC3401	3180-87
RC3403	3180-80
RC3403A	3212-43
RC4131	3196-26
RC4132	3195-44
RC4136	3212-50
RC4151	3233-129
	¶ 283-2
	¶ 283-15
	¶ 284-12
RC4152	3233-130
	¶ 283-15
RC4153	3233-131
	¶ 283-15
RC4156	3211-42
RC4157	3211-1
RC4191	★ 3588
	3230-84
RC4192	★ 3588
	3230-85
RC4193	★ 3576
	★ 3588
	3230-86
	¶ 312-13
RC4194	3230-20
RC4195	3228-14
RC4200	3235-85
	¶ 309-5
RC4200A	3235-86
	¶ 309-5
RC4391	★ 3576
RC4444	2622-61
	3216-133
RC4531	3199-17
RC4556	★ 3592
RC4558	★ 3592
	3208-58
RC4559	★ 3592
	3208-54
RC4560	★ 3592
RC4562	★ 3592
RC4739	★ 3592
	3208-55
RC4805	★ 3805
	3159-6
	¶ 300-9
RC4805A	★ 3805
	3159-1
	¶ 300-9
RC5532	★ 3592
RC5534	★ 3592
	3194-3
RC555	3220-41
RC556	3220-79
RC709	3200-5
RC714	★ 3592
	3182-45
RC714C	★ 3592
	3182-46
RC714E	★ 3592
	3182-47
RC723	3229-13
RC725	3192-2
RC741	3175-39
	3196-50
RC747	3208-43
RC8200	632-16
RC8201	632-18
RC8202	633-27
RC8203	633-30
RC8230	629-131
RC8231	629-143
RC8232	629-132
RC8233	629-10
RC8234	628-84
RC8241	624-163
RC8242	625-27
RC8243	639-8

¶ Indicates page number in Application Note Directory.
★ Indicates additional data is provided on the page noted.

IC MASTER

Raytheon Semiconductor (Cont'd)

Device	Page-Line
RC8250	612-26
RC8251	612-82
RC8252	612-83
RC8260	604-15
RC8261	603-158
RC8262	639-73
RC8263	629-113
RC8264	629-115
RC8266	628-80
RC8267	629-57
RC8270	631-114
	3788-59
RC8271	631-122
	3788-60
RC8273	633-37
	3791-17
RC8274	633-34
	3791-14
RC8277	633-23
	3791-9
RC8280	609-186
RC8281	607-139
RC8284	609-117
RC8285	610-173
RC8290	609-187
RC8291	607-140
RC8T09	613-146
RC8T20	630-92
REF-01	★ **3584**
	3237-91
REF-01A	★ **3584**
	3237-92
REF-01C	★ **3584**
	3237-93
REF-01D	★ **3584**
	3237-94
REF-01E	★ **3584**
	3237-95
REF-01H	★ **3584**
	3237-96
REF-02	★ **3585**
	3236-170
REF-02A	★ **3585**
	3236-171
REF-02C	★ **3585**
	3236-172
REF-02D	★ **3585**
	3236-173
REF-02E	★ **3585**
	3236-174
REF-02H	★ **3585**
	3236-175
REF-03	★ **3586**
RF9601	630-113
RM1537	3207-33
RM1558	3207-42
RM2505	604-157
RM3503	3180-81
RM3503A	3211-7
RM4131	3191-11
RM4132	3193-6
RM4136	3211-54
RM4151	3233-132
	¶ 283-2
	¶ 284-12
RM4152	3233-133
RM4153	3233-134
RM4156	3210-55
RM4157	3211-2
RM4191	3230-87
RM4192	3230-88
RM4193	3230-89
RM4194	3230-21
RM4195	3228-15
RM4444	2622-62
	3216-134
RM4531	3196-39
RM4558	3207-26
RM4559	3207-32
RM4805	★ **3582**
	3159-7
RM4805A	★ **3582**
	3159-2
RM5534	3191-52
RM555	3220-42
RM556	3220-80
RM709	3193-24
RM709A	3188-51
RM723	3229-14
RM725	3188-48
RM741	3196-54
RM747	3207-43
RM8200	632-17
RM8201	632-19
RM8202	633-28
RM8203	633-31
RM8230	629-133
RM8231	629-144
RM8232	629-134
RM8233	629-11
RM8234	628-85
RM8241	624-164
RM8242	625-28
RM8243	639-9
RM8250	612-27
RM8251	612-84
RM8252	612-85
RM8260	604-16
RM8261	603-159
RM8262	639-74
RM8263	629-114
RM8264	629-116
RM8266	628-81
RM8267	629-58
RM8270	631-115
	3788-61
RM8271	631-123
	3788-62
RM8273	633-38
	3791-18
RM8274	633-35
	3791-15
RM8277	633-24
	3791-10
RM8280	609-188
RM8281	607-141
RM8284	609-118
RM8285	610-174
RM8290	609-189
RM8291	607-142
RM8T09	613-147
RM8T20	630-93
XR2207C	3215-14
XR2207M	3215-15
XR2211C	3214-21
	3214-148
	3218-125
XR2211M	3214-22
	3214-149
	3218-126

RCA Solid State Division

Device	Page-Line
CA080	★ **3596**
	3202-11
	¶ 293-8
CA080A	★ **3596**
	3197-49
	¶ 293-8
CA080AT	★ **3596**
	3192-21
	¶ 293-8
CA080B	★ **3596**
	3192-19
	¶ 293-8
CA080C	★ **3596**
	3202-12
	¶ 293-8
CA080T	★ **3596**
	3197-50
	¶ 293-8
CA081	★ **3596**
	3202-9
	¶ 293-8
CA081A	★ **3596**
	3197-51
	¶ 293-8
CA081AT	★ **3596**
	3192-20
	¶ 293-8
CA081B	★ **3596**
	3192-18
	¶ 293-8
CA081C	★ **3596**
	3202-10
	¶ 293-8
CA081T	★ **3596**
	3197-52
	¶ 293-8
CA082	★ **3596**
	3209-35
	¶ 293-8
CA082A	★ **3596**
	3207-59
	¶ 293-8
CA082AT	★ **3596**
	3205-48
	¶ 293-8
CA082B	★ **3596**
	3205-46
	¶ 293-8
CA082C	★ **3596**
	3209-37
	¶ 293-8
CA082T	★ **3596**
	3207-60
	¶ 293-8
CA083	★ **3596**
	3209-36
	¶ 293-8
CA083A	★ **3596**
	3207-61
	¶ 293-8
CA083B	★ **3596**
	3205-47
	¶ 293-8
CA083C	★ **3596**
	3209-38
	¶ 293-8
CA084	★ **3596**
	3213-29
CA084A	★ **3596**
	3212-1
CA084B	★ **3596**
	3210-45
CA1190	3171-174
CA1191	3171-175
CA124	3180-60
CA1310A	3168-140
CA1352	3172-135
CA139	★ **3599**
	3162-58
CA1391	3171-94
CA1394	3171-95
CA1398	3170-145
CA139A	★ **3599**
	3162-26
CA1458	3175-7
CA1524	★ **3602**
	3230-90
CA1558	3207-44
CA158	3180-28
	3207-11
CA158A	3205-22
CA1724G	★ **3601**
	3157-156
CA1725G	★ **3601**
	3157-157
CA2002	3164-153
CA2004	3165-26
CA2111A	3168-69
CA224	3180-61
CA239	★ **3599**
	3163-21
CA239A	★ **3599**
	3162-40
CA2524	★ **3602**
	3230-91
CA258	3180-29
	3207-12
CA258A	3206-6
CA270	3172-136
CA2904	3180-12
CA3000	3155-37
	¶ 292-8
CA3000SERIES	★ **542**
	¶ 292-8
CA3001	3156-105
	¶ 297-11
CA3002	3168-41
	¶ 297-3
CA3005	★ **3603**
	3168-42
	3169-1
	¶ 297-4
	¶ 301-9
CA3006	★ **3603**
	3168-43
	3169-2
	¶ 297-4
CA3010	3197-35
	¶ 293-9
CA3010A	3191-56
	¶ 293-9
CA3011	3156-106
	¶ 301-9
CA3012	3168-44
	¶ 301-9
CA3013	3168-70
	¶ 301-9
CA3014	3168-71
	¶ 301-9
CA3015	3180-112
	3197-44
	¶ 293-10
CA3015A	3180-113
	3191-59
	¶ 293-10
CA3018	★ **3601**
	3157-1
	¶ 297-14
CA3018A	★ **3601**
	3157-2
	¶ 297-14
CA3019	★ **3601**
	3158-146
	¶ 298-1
CA301A	3199-54
CA3020	3164-99
CA3020A	3156-107
CA3021	3156-108
	¶ 297-5
CA3022	3156-109
	¶ 297-5
CA3023	3156-110
	¶ 297-5
CA3026	3157-40
CA3028	★ **3603**
	3168-45
CA3028A	★ **3603**
	3155-32
	¶ 297-6
CA3028B	★ **3603**
	3155-33
	¶ 297-6
CA3029	3197-36
CA3029A	3191-57
CA3030	3180-114
	3197-45
CA3030A	3180-115
	3191-60
CA3037	3197-37
CA3037A	3191-58
CA3038	3180-116
	3197-46
CA3038A	3180-117
	3191-61
CA3039	★ **3601**
CA3040	3156-111
CA3042	3168-72
	3171-176
	¶ 304-1
CA3045	★ **3601**
	3157-15
CA3046	★ **3601**
	3157-16
CA3048	★ **3601**
	3155-1
	3232-1
	¶ 293-15
CA3049	★ **3601**
	3157-44
	3169-3
CA3050	3157-46
CA3051	3157-47
CA3052	★ **3601**
	3155-2
CA3053	★ **3603**
	3155-34
CA3054	3157-41
CA3058	★ **3603**
	3239-99
	¶ 291-7
CA3059	★ **3603**
	3239-100
	¶ 291-7
CA3060	★ **3597**
	3210-3
CA3060A	★ **3597**
	3208-23
CA3060B	★ **3597**
	3208-24
CA3064	3170-38
CA3065	3168-73
	3171-177
CA3067	3170-146
CA3068	3172-137
	¶ 303-4
CA307	3199-43
CA3070	3170-147
CA3071	3170-148
CA3072	3170-149
CA3075	3168-74
	3171-178
CA3076	3168-46
CA3078	★ **3597**
	3194-12
CA3078A	★ **3597**
	3190-55
CA3079	★ **3603**
	3239-101
	¶ 291-7
CA3080	★ **3598**
	3165-149
	3167-60
	3194-25
CA3080A	★ **3598**
	3165-150
	3167-61
	3194-26
	¶ 293-13
CA3081	★ **3601**
	3158-96
CA3082	★ **3601**
	3158-92
CA3083	3157-167
CA3084	3157-137
CA3085	★ **3602**
	3228-33
	¶ 313-8
CA3085A	★ **3602**
	3228-90
	¶ 313-8
CA3085B	★ **3602**
	3229-50
	¶ 313-8
CA3086	★ **3601**
	3157-17
CA3088	3167-111
CA3089	3168-75
	¶ 300-16
CA3091	★ **3604**
	3235-41
CA3093	★ **3601**
CA3094	★ **3598**
	3164-135
	3175-107
	¶ 293-5
	¶ 311-6
CA3094A	★ **3598**
	3197-18
	¶ 293-5
	¶ 311-6
CA3094B	★ **3598**
	3197-19
	¶ 293-5
	¶ 311-6
CA3096	★ **3601**
	3157-140
CA3096A	★ **3601**
	3157-141
CA3096C	★ **3601**
	3157-142
CA3097	★ **3601**
	3158-151
CA3098	★ **3599**
	641-114
	★ **3599**
	3232-103
CA3099	★ **3599**
	641-115
	★ **3599**
	3232-104
CA3100	★ **3596**
	3197-29
CA3102	★ **3601**
	3157-45
CA3105	3196-5
CA3105M	3196-6
CA311	★ **3598**
	3166-33
CA3118	★ **3601**
	3157-3
CA3118A	★ **3601**
	3157-4
CA3120	3171-140
CA3121	3170-150
CA3123	3167-112
CA3125	3170-151
CA3126	3170-152
CA3127	★ **3601**
	3157-176
	3168-122
CA3128	3170-153
CA3130	★ **3596**
	3202-8
	¶ 296-6
CA3130A	★ **3596**
	3194-31
	¶ 296-6
	¶ 296-6
CA3131	3164-154
CA3132	3164-155
CA3134	3171-179
	¶ 303-10
CA3135	3170-154
CA3136	3172-138
CA3137	3170-155
CA3138	3157-158
CA3138A	3157-159
CA3139	3170-39
CA3140	★ **3595**
	3175-43
	3202-7
CA3140A	★ **3595**
	3194-33
CA3141	★ **3601**
	3158-147
CA3142	3171-141
CA3143	3170-156
	¶ 303-3
	¶ 303-7
CA3144	3170-157
	¶ 303-3
	¶ 303-7
CA3145	3170-158
CA3146	★ **3601**
	3157-18
CA3146A	★ **3601**
	3157-19
CA3151	3170-159
CA3153	3170-160
CA3154	3171-142
	¶ 303-2
CA3156	3170-161
CA3158	3170-162
CA3159	3171-96
CA3160	★ **3596**
	3175-44
	3202-6
CA3160A	★ **3596**
	3194-30
CA3161	★ **3600**
	2637-26
CA3162	★ **3600**
	2637-27
CA3163	641-22
	3215-81
CA3164	★ **3604**
	3173-93
CA3164E	★ **3604**
	3232-33
CA3165	★ **3602**
	3233-71
CA3166	3155-141
CA3168	★ **3599**
	2662-70
CA3169	★ **3602**
	3234-137
CA3169M	★ **3602**
	3234-138
CA3170	3170-163
CA3172	3170-164
CA3177	3156-1
CA3179	★ **3603**
	641-23
	★ **3603**
	3214-70
	3215-82
CA3183	★ **3601**
	3157-168
CA3189	3168-76
CA3191	3172-139
CA3192	3172-140

Arranged alphanumerically from left to right.

© IC MASTER 1984

RCA Solid State Division (Cont'd)

Device	Page-Line
CA3193	★ 3594
	3187-3
CA3193A	★ 3594
	3184-20
CA3193B	★ 3594
	3182-58
CA3194	3170-165
CA3195	3168-141
CA3199	★ 3603
	600-22
	★ 3603
	3214-71
CA3201	3170-166
CA3202	3171-73
CA3207	★ 3599
	2679-12
CA3208	★ 3599
	2679-11
CA3209	3168-77
CA3210	3171-97
	¶ 303-11
CA3211	★ 3603
	600-29
	★ 3603
	3214-84
CA3215	3168-78
CA3216	3172-141
CA3217	3170-167
	¶ 304-2
CA3219	★ 3602
	2683-16
CA3221	3170-168
CA3223	3171-74
CA3227	★ 3601
	3157-177
CA3228	★ 3602
	3234-152
CA3232	600-28
CA324	3180-62
CA3240	★ 3595
	3180-39
CA3240A	★ 3595
	3206-39
CA3246	★ 3601
	3157-178
CA3260	★ 3595
	3175-45
CA3260AE	★ 3595
	3206-37
CA3260AT	★ 3595
	3206-38
CA3260B	★ 3595
	3205-1
CA3260E	★ 3595
	3209-33
CA3260T	★ 3595
	3209-34
CA3280	★ 3597
	3206-17
CA3290	★ 3598
	3162-15
CA3290A	★ 3598
	3162-11
CA3290B	★ 3598
	3161-52
CA3300	★ 3600
	2625-17
CA3308	★ 3600
	2625-44
CA339	★ 3599
	3163-22
CA339A	★ 3599
	3162-41
CA3401	3180-88
CA3420	★ 3594
	3200-29
CA3420A	★ 3594
	3194-24
CA3420B	★ 3594
	3189-10
CA3440	★ 3594
	3200-31
CA3440A	★ 3594
	3194-32
CA3440B	★ 3594
	3189-22
CA3493	★ 3594
	3187-4
CA3493B	★ 3594
	3182-59
CA3524	★ 3602
	3230-92
CA358	3180-18
CA358A	3206-13
CA3600	★ 3601
	592-48
	★ 3601
	3158-145
CA555	★ 3604
	3220-43
CA555C	★ 3604
	3220-44
CA6078A	3190-56
CA6741	3197-2
CA723	★ 3602
	3229-15
CA723C	★ 3602
	3229-16
CA741	3175-35
CA741C	3198-51
CA747	3207-45
CA747C	3208-44
CA748	3197-11
CA748C	3198-58
CA758	3168-142
CA920A	3171-98
CD1878	1340-113
CD22012	3166-149
CD22014	3166-150
CD22100	★ 840
	2622-63
	★ 840
	3216-140
CD22101	★ 840
	2622-64
	★ 840
	3216-143
CD22102	★ 840
	2622-65
	★ 840
	3216-144
CD22103	★ 840
	3219-37
CD22104	★ 839
	579-156
CD22104A	★ 839
	579-157
CD22105	★ 839
	579-151
CD22105A	★ 839
	579-152
CD22301	★ 840
	3216-66
CD22302	★ 840
CD22401	★ 838
	3170-26
CD22402	3172-63
CD22413	★ 840
	3217-99
CD22414	★ 840
	3217-100
CD22859	★ 840
	3219-85
CD3226	3172-182
CD4000A	★ 837
	584-124
	¶ 252-14
CD4000AE	★ 837
	584-125
CD4000B	★ 837
	584-126
CD4000BE	★ 837
	584-127
CD4000UB	★ 837
	584-128
CD4000UBE	★ 837
	584-129
CD4001A	★ 837
	585-50
	¶ 250-4
	¶ 252-14
CD4001AE	★ 837
	585-51
	¶ 250-4
CD4001B	★ 837
	585-52
	¶ 250-4
CD4001BE	★ 837
	585-53
	¶ 250-4
CD4001UB	★ 837
	585-54
	¶ 250-4
CD4001UBE	★ 837
	585-55
	¶ 250-4
CD4002A	★ 837
	584-155
CD4002AE	★ 837
	584-156
CD4002B	★ 837
	584-157
CD4002BE	★ 837
	584-158
CD4002UB	★ 837
	584-159
CD4002UBE	★ 837
	584-160
CD40061	587-152
CD40061A	587-153
	3772-58
CD4006A	★ 838
	591-169
CD4006AE	★ 838
	591-170
CD4006B	★ 838
	591-171
CD4006BE	★ 838
	591-172
	★ 838
	3789-98
CD4007A	★ 837
	573-152
	¶ 282-5
CD4007AE	★ 837
	573-153
CD4007UB	★ 837
	573-154
CD4007UBE	★ 837
	573-155
CD4008A	★ 840
	571-44
	¶ 250-4
CD4008AE	★ 840
	571-45
	¶ 250-4
CD4008B	★ 840
	571-46
	¶ 250-4
CD4008BE	★ 840
	571-47
	¶ 250-4
CD4009A	★ 837
	572-76
	¶ 251-8
CD4009AE	★ 837
	572-77
	¶ 251-8
CD4009UB	★ 837
	572-78
	¶ 251-8
CD4009UBE	★ 837
	572-79
	¶ 251-8
CD40100B	★ 838
	591-185
CD40100BE	★ 838
	591-186
CD40101B	★ 840
	592-81
CD40101BE	★ 840
	592-82
CD40102B	★ 839
	576-184
CD40102BE	★ 839
	576-185
CD40103B	★ 839
	574-174
CD40103BE	★ 839
	574-175
CD40104B	★ 838
	590-157
CD40105B	★ 838
	587-93
	★ 838
	3757-1
CD40105BE	★ 838
	587-94
	★ 838
	3757-2
CD40106B	★ 837
	593-138
CD40106BE	★ 837
	593-139
CD40107B	★ 837
	582-161
CD40107BE	★ 837
	582-162
	¶ 251-5
CD40108B	★ 838
	★ 840
	587-100
CD40108BE	★ 838
	★ 840
	587-101
CD40109B	★ 837
	592-26
CD40109BE	★ 837
	592-27
CD4010A	★ 837
	572-120
	¶ 251-8
CD4010AE	★ 837
	572-121
	¶ 251-8
CD4010B	★ 837
	572-122
	¶ 251-8
CD4010BE	★ 837
	572-123
	¶ 251-8
CD40110B	★ 839
	577-7
CD40110BE	★ 839
	577-8
CD40114B	587-133
	3771-47
CD40114BE	587-134
CD40115	★ 837
CD40116	★ 837
	592-36
CD40117B	★ 840
	593-36
CD4011A	★ 837
	583-90
	¶ 250-4
CD4011AE	★ 837
	583-91
	¶ 250-4
CD4011B	★ 837
	583-92
	¶ 250-4
CD4011BE	★ 837
	583-93
	¶ 250-4
	★ 837
	3771-48
	¶ 250-4
CD4011UB	★ 837
	583-94
	¶ 250-4
CD4011UBE	★ 837
	583-95
	¶ 250-4
CD4012A	★ 837
	582-186
CD4012AE	★ 837
	582-187
CD4012B	★ 837
	582-188
CD4012BE	★ 837
	582-189
CD4012UB	★ 837
	582-190
CD4012UBE	★ 837
	582-191
CD4013A	★ 838
	580-59
	¶ 250-4
CD4013AE	★ 838
	580-60
	¶ 250-4
CD4013B	★ 838
	580-61
	¶ 250-4
CD4013BE	★ 838
	580-62
	¶ 250-4
CD40147B	★ 837
	595-22
CD40147BE	★ 837
	595-23
CD4014A	★ 838
	591-134
CD4014AE	★ 838
	591-135
CD4014B	★ 838
	591-136
	★ 838
	3790-69
CD4014BE	★ 838
	591-137
	★ 838
	3790-59
CD4015A	★ 838
	590-58
CD4015AE	★ 838
	590-59
CD4015B	★ 838
	590-60
	★ 838
	3789-76
CD4015BE	★ 838
	590-61
	★ 838
	3789-74
CD40160B	★ 839
	576-110
CD40160BE	★ 839
	576-111
CD40161B	★ 839
	574-94
CD40161BE	★ 839
	574-95
CD40162B	★ 839
	576-69
CD40162BE	★ 839
	576-70
CD40163B	★ 839
	574-58
CD40163BE	★ 839
	574-59
CD4016A	★ 839
	★ 840
	2617-67
	¶ 287-8
CD4016AE	★ 839
	★ 840
	2617-68
CD4016B	★ 839
	★ 840
	2617-69
CD4016BE	★ 839
	★ 840
	2617-70
CD40174B	★ 838
	580-167
CD40174BE	★ 838
	580-168
CD40175B	★ 838
	580-139
CD40175BE	★ 838
	580-140
CD4017A	★ 839
	576-27
	¶ 253-16
CD4017AE	★ 839
	576-28
	¶ 253-16
CD4017B	★ 839
	576-29
	¶ 253-16
CD4017BE	★ 839
	576-30
	¶ 253-16
CD40181B	★ 840
	571-81
CD40181BE	★ 840
	571-82
CD40182B	★ 840
	571-95
CD40182BE	★ 840
	571-96
CD4018A	★ 839
	577-146
	¶ 254-4
CD4018AE	★ 839
	577-147
	¶ 254-4
CD4018B	★ 839
	577-148
	¶ 254-4
CD4018BE	★ 839
	577-149
	¶ 254-4
CD40192B	★ 839
	576-152
CD40192BE	★ 839
	576-153
CD40193B	★ 839
	574-142
CD40193BE	★ 839
	574-143
CD40194B	★ 838
	590-158
CD4019A	★ 837
	★ 839
	583-177
	¶ 250-4
CD4019AE	★ 837
	★ 839
	583-178
	¶ 250-4
CD4019B	★ 837
	★ 839
	583-179
	¶ 250-4
CD4019BE	★ 837
	★ 839
	583-180
	¶ 250-4
CD40208B	★ 838
	★ 840
	587-102
CD40208BE	★ 838
	★ 840
	587-103
CD4020A	★ 839
	575-136
CD4020AE	★ 839
	575-137
CD4020B	★ 839
	575-138
CD4020BE	★ 839
	575-139
CD4021A	★ 838
	591-19
CD4021AE	★ 838
	591-20
CD4021B	★ 838
	591-21
	★ 838
	3790-70
CD4021BE	★ 838
	591-22
	★ 838
	3790-60
CD4022A	★ 839
	577-117
CD4022AE	★ 839
	577-118
CD4022B	★ 839
	577-119
CD4022BE	★ 839
	577-120
CD4023A	★ 837
	583-36
CD4023AE	★ 837
	583-37
CD4023B	★ 837
	583-38
CD4023BE	★ 837
	583-39
CD4023UB	★ 837
	583-40
CD4023UBE	★ 837
	583-41
CD4024A	★ 838
	575-58
	¶ 253-16
CD4024AE	★ 838
	575-59
	¶ 253-16
CD4024B	★ 838
	575-60
	¶ 253-16
CD4024BE	★ 838
	575-61
	¶ 253-16
CD40257B	★ 839
	588-129
CD40257BE	★ 839
	588-130
CD4025A	★ 837
	585-2
CD4025AE	★ 837
	585-3

¶ Indicates page number in Application Note Directory.
★ Indicates additional data is provided on the page noted.

IC MASTER

RCA Solid State Division (Cont'd)

Device	Page-Line
CD4025B	★ 837 585-4
CD4025BE	★ 837 585-5
CD4025UB	★ 837 585-6
CD4025UBE	★ 837 585-7
CD4026A	★ 839 575-184 ¶ 251-8
CD4026AE	★ 839 575-185 ¶ 251-8
CD4026B	★ 839 575-186 ¶ 251-8
CD4026BE	★ 839 575-187 ¶ 251-8
CD4027A	★ 838 582-30
CD4027AE	★ 838 582-31
CD4027B	★ 838 582-32
CD4027BE	★ 838 582-33
CD4028A	★ 837 578-42
CD4028AE	★ 837 578-43
CD4028B	★ 837 578-44
CD4028BE	★ 837 578-45
CD4029A	★ 839 578-2
CD4029B	★ 839 578-3
CD4029BE	★ 839 578-4
CD4030A	★ 837 ★ 840 585-134
CD4030AE	★ 837 ★ 840 585-135
CD4030B	★ 837 ★ 840 585-136
CD4030BE	★ 837 ★ 840 585-137
CD4031A	★ 838 592-5
CD4031AE	★ 838 592-6
CD4031B	★ 838 592-7 ★ 838 3791-43
CD4031BE	★ 838 592-8 ★ 838 3791-41
CD4032A	★ 840 571-20
CD4032AE	★ 840 571-21
CD4032B	★ 840 571-22
CD4032BE	★ 840 571-23
CD4033A	★ 839 576-1 ¶ 251-8
CD4033AE	★ 839 576-2 ¶ 251-8
CD4033B	★ 839 576-3 ¶ 251-8
CD4033BE	★ 839 576-4 ¶ 251-8
CD4034A	★ 838 ★ 840 591-39
CD4034AE	★ 838 ★ 840 591-40
CD4034B	★ 838 ★ 840 591-41 ★ 838 ★ 840 3790-19
CD4034BE	★ 838 ★ 840 591-42
CD4035A	★ 838 590-159
CD4035AE	★ 838 590-160
CD4035B	★ 838 590-161 ★ 838 3789-52
CD4035BE	★ 838 590-162 ★ 838 3789-42
CD4036A	587-115 3770-58
CD4036AE	587-116
CD4037A	★ 837 583-168
CD4037AE	★ 837 583-169
CD4038A	★ 840 571-8
CD4038AE	★ 840 571-9
CD4038B	★ 840 571-10
CD4038BE	★ 840 571-11
CD4039A	587-120 3770-55
CD4039AE	587-121
CD4040A	★ 838 575-101
CD4040AE	★ 838 575-102
CD4040B	★ 838 575-103
CD4040BE	★ 838 575-104
CD4041A	★ 837 572-32
CD4041AE	★ 837 572-33
CD4041UB	★ 837 572-34
CD4041UBE	★ 837 572-35
CD4042A	★ 838 586-59
CD4042AE	★ 838 586-60
CD4042B	★ 838 586-61
CD4042BE	★ 838 586-62
CD4043A	★ 838 586-111
CD4043AE	★ 838 586-112
CD4043B	★ 838 586-113
CD4043BE	★ 838 586-114
CD4044A	★ 838 586-90
CD4044A/B	★ 838 586-91
CD4044A/BE	★ 838 586-92
CD4044AE	★ 838 586-93
CD4044B	★ 838 586-94
CD4045A	★ 839 590-25
CD4045AE	★ 839 590-26
CD4045B	★ 839 590-27
CD4045BE	★ 839 590-28
CD4046A	★ 840 592-94 ¶ 310-10
	★ 840 3214-40 ¶ 310-10
CD4046AE	★ 840 592-95 ★ 840 3214-41
CD4046B	★ 840 592-96 ★ 840 3214-42
CD4046BE	★ 840 592-97 ★ 840 3214-43
CD4047A	★ 838 589-79 ¶ 253-6
CD4047AE	★ 838 589-80 ¶ 253-6
CD4047B	★ 838 589-81 ¶ 253-6
CD4047BE	★ 838 589-82 ¶ 253-6
CD4048A	★ 837 586-11
CD4048AE	★ 837 586-12
CD4048B	★ 837 586-13
CD4048BE	★ 837 586-14
CD4049A	★ 837 572-99
CD4049AE	★ 837 572-100
CD4049UB	★ 837 572-101
CD4049UBE	★ 837 572-102
CD4050A	★ 837 572-144
CD4050AE	★ 837 572-145
CD4050B	★ 837 572-146
CD4050BE	★ 837 572-147
CD4051B	★ 839 2623-42
CD4051BE	★ 839 2623-43
CD4052B	★ 839 2622-88
CD4052BE	★ 839 2622-89
CD4053B	★ 839 2619-67
CD4053BE	★ 839 2619-68
CD4054B	★ 839 579-159 ★ 839 2663-10
CD4054BE	★ 839 579-160
CD4055B	★ 839 579-120 ★ 839 2662-36
CD4055BE	★ 839 579-121 ★ 839 2662-37
CD4056B	★ 839 579-125 ★ 839 2662-65
CD4056BE	★ 839 579-126 ★ 839 2662-66
CD4057A	★ 840 571-83
CD4059A	★ 839 577-92 ¶ 309-14
CD4059AE	★ 839 577-93 ¶ 309-14
CD4060A	★ 839 575-165
CD4060AE	★ 839 575-166
CD4060B	★ 839 575-167 ¶ 306-14
CD4060BE	★ 839 575-168
CD4061A	587-154 ¶ 322-9
CD4063B	★ 840 571-117
CD4063BE	★ 840 571-118
CD4066A	★ 840 2617-35
CD4066AE	★ 840 2617-36
CD4066B	★ 840 2617-37
CD4066BE	★ 840 2617-38
CD4067B	★ 839 2624-50
CD4067BE	★ 839 2624-51
CD4068B	★ 837 583-141
CD4068BE	★ 837 583-142
CD4069UB	★ 837 574-6
CD4069UBE	★ 837 574-7
CD4070B	★ 837 ★ 840 585-138
CD4070BE	★ 837 ★ 840 585-139
CD4071B	★ 837 584-94
CD4071BE	★ 837 584-95
CD4072B	★ 837 584-37
CD4072BE	★ 837 584-38
CD4073B	★ 837 582-94
CD4073BE	★ 837 582-95
CD4075B	★ 837 584-59
CD4075BE	★ 837 584-60
CD4076B	★ 838 580-103
CD4076BE	★ 838 580-104
CD4077B	★ 837 ★ 840 585-177
CD4077BE	★ 837 ★ 840 585-178
CD4078B	★ 837 585-97
CD4078BE	★ 837 585-98
CD4081B	★ 837 582-135
CD4081BE	★ 837 582-136
CD4082B	★ 837 582-71
CD4082BE	★ 837 582-72
CD4085B	★ 837 584-2
CD4085BE	★ 837 584-3
CD4086B	★ 837 584-20
CD4086BE	★ 837 584-21
CD4089B	★ 840 593-8 ¶ 250-5
CD4089BE	★ 840 593-9 ¶ 250-5
CD4093B	★ 837 593-98 ¶ 251-4
CD4093BE	★ 837 593-99
CD4094B	★ 838 591-53 ★ 838 3790-129
CD4094BE	★ 838 591-54 ★ 838 3791-1
CD4095B	★ 838 581-136
CD4095BE	★ 838 581-137
CD4096B	★ 838 581-138
CD4096BE	★ 838 581-139
CD4097B	★ 839 2624-1
CD4097BE	★ 839 2624-2
CD4098B	★ 838 589-104
CD4098BE	★ 838 589-105
CD4099B	★ 838 587-61
CD4099BE	★ 838 587-62
CD4502B	★ 837 572-62
CD4502BE	★ 837 572-63
CD4503BD	★ 837 573-59
CD4503BE	★ 837 573-60
CD4508B	★ 838 586-29
CD4508BE	★ 838 586-30
CD4510B	★ 839 576-154
CD4510BE	★ 839 576-155
CD4511B	★ 839 580-8 ★ 839 2662-50
CD4511BE	★ 839 580-9 ★ 839 2662-51
CD4512B	★ 839 589-1
CD4512BE	★ 839 589-2
CD4514B	★ 837 579-36
CD4514BE	★ 837 579-37
CD4515B	579-38
CD4515BE	579-39
CD4516B	★ 839 574-144
CD4516BE	★ 839 574-145
CD4517B	★ 838 590-83
CD4517BE	★ 838 590-84 ★ 838 3791-52 3791-55
CD4518B	★ 839 577-29 ¶ 253-16
CD4518BE	★ 839 577-30 ¶ 253-16
CD4520B	★ 839 575-11 ¶ 253-7
CD4520BE	★ 839 575-12
CD4527B	★ 840 593-19 ¶ 250-5
CD4527BE	★ 840 593-20 ¶ 250-5
CD4532B	★ 837 595-8
CD4532BE	★ 837 595-9
CD4536B	★ 839 590-7
CD4536BE	★ 839 590-8
CD4538B	★ 838 589-139
CD4538BE	★ 838 589-140
CD4541B	★ 839 589-179
CD4541BE	★ 839 590-1
CD4543BD	★ 839 2662-57
CD4543BE	★ 839 2662-58
CD4555B	★ 837 ★ 839 578-80
CD4555BE	★ 837 ★ 839 578-81
CD4556B	★ 837 ★ 839 578-94
CD4556BE	★ 837 ★ 839 578-95
CD4585B	★ 840 571-119
CD4585BE	★ 840 571-120
CD4724B	★ 838 587-63
CD4724BE	★ 838 587-64
CD54HC00	★ 842 583-96
CD54HC02	★ 842 585-56
CD54HC04	★ 842 574-8
CD54HC08	★ 842 582-137
CD54HC10	★ 842 583-42
CD54HC107	★ 842 581-181
CD54HC109	★ 842 582-34
CD54HC11	★ 842 582-96
CD54HC112	★ 842 581-159
CD54HC123	★ 842 589-106
CD54HC132	★ 842 593-100
CD54HC138	★ 842 578-161
CD54HC139	★ 842 578-117
CD54HC14	★ 842 593-140
CD54HC147	★ 842 579-94
CD54HC151	★ 842 588-172
CD54HC153	★ 842 588-77
CD54HC154	★ 842 579-81
CD54HC157	★ 842 588-90
CD54HC158	★ 842 588-107

Arranged alphanumerically from left to right.

© IC MASTER 1984

RCA Solid State Division (Cont'd)

Device	Page-Line
CD54HC160	★ 842 576-112
CD54HC161	★ 842 574-96
CD54HC162	★ 842 576-71
CD54HC163	★ 842 574-60
CD54HC164	★ 842 591-104
CD54HC165	★ 842 591-76
CD54HC166	★ 842 591-119
CD54HC173	★ 842 580-105
CD54HC174	★ 842 580-169
CD54HC175	★ 842 580-141
CD54HC190	★ 842 577-13
CD54HC191	★ 842 574-146
CD54HC192	★ 842 576-156
CD54HC193	★ 842 574-147
CD54HC194	★ 842 590-106
CD54HC195	★ 842 590-137
CD54HC20	★ 842 582-192
CD54HC221	★ 842 589-141
CD54HC238	★ 842 578-162
CD54HC240	★ 842 594-20
CD54HC241	★ 842 594-56
CD54HC242	★ 842 593-62
CD54HC243	★ 842 593-63
CD54HC244	★ 842 593-174
CD54HC245	★ 842 594-144
CD54HC251	★ 842 589-36
CD54HC253	★ 842 588-69
CD54HC257	★ 842 588-131
CD54HC259	★ 842 587-65
CD54HC27	★ 842 585-8
CD54HC273	★ 842 581-3
CD54HC280	★ 842 571-185
CD54HC297	★ 842 592-71 592-112
CD54HC299	★ 842 591-153
CD54HC32	★ 842 584-96
CD54HC354	★ 842 589-37
CD54HC356	★ 842 589-38
CD54HC365	★ 842 573-61
CD54HC366	★ 842 573-11
CD54HC367	★ 842 573-62
CD54HC368	★ 842 573-12
CD54HC373	★ 842 586-149
CD54HC374	★ 842 581-95
CD54HC377	★ 842 581-21
CD54HC384	★ 843 571-145
CD54HC390	★ 843 577-54
CD54HC393	★ 843 575-31
CD54HC4002	★ 843 584-161
CD54HC40102	★ 843 576-186
CD54HC40103	★ 843 575-78
CD54HC40104	★ 843 590-119
CD54HC40105	★ 843 587-87
CD54HC4015	★ 843 590-62
CD54HC4016	★ 843
CD54HC4017	★ 843 576-31
CD54HC4020	★ 843 575-140
CD54HC4024	★ 843 575-62
CD54HC4040	★ 843 575-105
CD54HC4046	★ 843 592-98
CD54HC4049	★ 843 572-103
CD54HC4050	★ 843 572-148
CD54HC4051	★ 843
CD54HC4052	★ 843
CD54HC4053	★ 843
CD54HC4060	★ 843 575-169
CD54HC4066	★ 843
CD54HC4067	★ 843
CD54HC4075	★ 843 584-61
CD54HC4094	★ 843 591-55
CD54HC42	★ 842 578-46
CD54HC423	★ 843 589-142
CD54HC4511	★ 843 580-10
CD54HC4514	★ 843 579-40
CD54HC4515	★ 843 579-41
CD54HC4518	★ 843 577-31
CD54HC4520	★ 843 575-41
CD54HC4538	★ 843 589-143
CD54HC4543	★ 843 579-137
CD54HC533	★ 843 587-7
CD54HC534	★ 843 581-41
CD54HC540	★ 843 573-111
CD54HC541	★ 843 573-112
CD54HC563	★ 843 587-8
CD54HC564	★ 843 581-42
CD54HC573	★ 843 586-150
CD54HC574	★ 843 581-96
CD54HC640	★ 843 594-116
CD54HC643	★ 843 594-117
CD54HC646	★ 843 594-94
CD54HC648	★ 843 594-80
CD54HC670	★ 843 587-106
CD54HC688	★ 843 571-65
CD54HC73	★ 842 581-182
CD54HC74	★ 842 580-63
CD54HC75	★ 842 586-63
CD54HC85	★ 842 571-121
CD54HC86	★ 842 585-140
CD54HCT00	583-97
CD54HCT02	585-57
CD54HCT04	574-9
CD54HCT08	582-138
CD54HCT10	583-43
CD54HCT107	581-183
CD54HCT109	582-35
CD54HCT11	582-97
CD54HCT123	589-107
CD54HCT132	593-101
CD54HCT138	578-163
CD54HCT139	578-118
CD54HCT14	593-141
CD54HCT147	579-95
CD54HCT151	588-173
CD54HCT153	588-78
CD54HCT154	579-82
CD54HCT157	588-91
CD54HCT158	588-108
CD54HCT160	576-113
CD54HCT161	574-97
CD54HCT162	576-72
CD54HCT163	574-61
CD54HCT164	591-105
CD54HCT165	591-77
CD54HCT173	580-106
CD54HCT174	580-170
CD54HCT175	580-142
CD54HCT190	577-14
CD54HCT191	574-148
CD54HCT192	576-157
CD54HCT193	574-149
CD54HCT194	590-107
CD54HCT195	590-138
CD54HCT20	582-193
CD54HCT221	589-144
CD54HCT240	594-21
CD54HCT241	594-57
CD54HCT242	593-64
CD54HCT243	593-65
CD54HCT244	593-175
CD54HCT245	594-145
CD54HCT251	589-39
CD54HCT253	588-70
CD54HCT257	588-132
CD54HCT259	587-66
CD54HCT27	585-9
CD54HCT273	581-4
CD54HCT280	571-186
CD54HCT297	592-72 592-113 3214-44
CD54HCT299	591-154
CD54HCT32	584-97
CD54HCT354	589-40
CD54HCT356	589-41
CD54HCT365	573-63
CD54HCT366	573-13
CD54HCT367	573-64
CD54HCT368	573-14
CD54HCT373	586-151
CD54HCT374	581-97
CD54HCT377	581-22
CD54HCT384	571-146
CD54HCT390	577-55
CD54HCT393	575-32
CD54HCT4002	584-162
CD54HCT40102	576-187
CD54HCT40103	575-79
CD54HCT40104	590-120
CD54HCT40105	587-88
CD54HCT4015	590-63
CD54HCT4017	576-32
CD54HCT4020	575-141
CD54HCT4024	575-63
CD54HCT4040	575-106
CD54HCT4046	592-99
CD54HCT4060	575-170
CD54HCT4075	584-62
CD54HCT42	578-47
CD54HCT423	589-145
CD54HCT4511	580-11
CD54HCT4514	579-42
CD54HCT4515	579-43
CD54HCT4518	577-32
CD54HCT4520	575-42
CD54HCT4538	589-146
CD54HCT4543	579-138
CD54HCT533	587-9
CD54HCT534	581-43
CD54HCT540	573-113
CD54HCT541	573-114
CD54HCT563	587-10
CD54HCT564	581-44
CD54HCT573	586-152
CD54HCT574	581-98
CD54HCT640	594-118
CD54HCT643	594-119
CD54HCT646	594-95
CD54HCT648	594-81
CD54HCT670	587-107
CD54HCT688	571-66
CD54HCT73	581-184
CD54HCT74	580-64
CD54HCT75	586-64
CD54HCT85	571-122
CD54HCT86	585-141
CD54HCU04	574-10
CD74HC00	583-98
CD74HC02	585-58
CD74HC04	574-11
CD74HC08	582-139
CD74HC10	583-44
CD74HC107	581-185
CD74HC109	582-36
CD74HC11	582-98
CD74HC112	581-160
CD74HC123	589-108
CD74HC132	593-102
CD74HC138	578-164
CD74HC139	578-119
CD74HC14	593-142
CD74HC147	579-96
CD74HC151	588-174
CD74HC153	588-79
CD74HC154	579-83
CD74HC157	588-92
CD74HC158	588-109
CD74HC160	576-114
CD74HC161	574-98
CD74HC162	576-73
CD74HC163	574-62
CD74HC164	591-106
CD74HC165	591-78
CD74HC166	591-79
CD74HC173	580-107
CD74HC174	580-171
CD74HC175	580-143
CD74HC190	577-15
CD74HC191	574-150
CD74HC192	576-158
CD74HC193	574-151
CD74HC194	590-108
CD74HC195	590-139
CD74HC20	582-194
CD74HC221	589-147
CD74HC238	578-165
CD74HC240	594-22
CD74HC241	594-58
CD74HC242	593-66
CD74HC243	593-67
CD74HC244	593-176
CD74HC245	594-146
CD74HC251	589-42
CD74HC253	588-71
CD74HC257	588-133
CD74HC259	587-67
CD74HC27	585-10
CD74HC273	581-5
CD74HC280	571-187
CD74HC297	592-73 592-114
CD74HC299	591-155
CD74HC32	584-98
CD74HC354	589-43
CD74HC356	589-44
CD74HC365	573-65
CD74HC366	573-15
CD74HC367	573-66
CD74HC368	573-16
CD74HC373	586-153
CD74HC374	581-99
CD74HC377	581-23
CD74HC384	★ 843 571-147
CD74HC390	★ 843 577-56
CD74HC393	★ 843 575-33
CD74HC4002	★ 843 584-163
CD74HC40102	★ 843 576-188
CD74HC40103	★ 843 575-80
CD74HC40104	★ 843 590-121
CD74HC40105	★ 843 587-89
CD74HC4015	★ 843 590-64
CD74HC4016	★ 843
CD74HC4017	★ 843 576-33
CD74HC4020	★ 843 575-142
CD74HC4024	★ 843 575-64
CD74HC4040	★ 843 575-107
CD74HC4046	★ 843 592-100
CD74HC4049	★ 843 572-104
CD74HC4050	★ 843 572-149
CD74HC4051	★ 843 2623-44
CD74HC4052	★ 843 2622-90
CD74HC4053	★ 843 2619-69
CD74HC4060	★ 843 575-171
CD74HC4066	★ 843 2617-39
CD74HC4067	★ 843
CD74HC4075	★ 843 584-63
CD74HC4094	★ 843 591-56
CD74HC42	578-48
CD74HC423	★ 843 589-148
CD74HC4511	★ 843 580-12
CD74HC4514	★ 843 579-44
CD74HC4515	★ 843 579-45
CD74HC4518	★ 843 577-33
CD74HC4520	★ 843 575-43
CD74HC4538	★ 843 589-149
CD74HC4543	★ 843 579-139
CD74HC533	★ 843 587-11
CD74HC534	★ 843 581-45
CD74HC540	★ 843 573-115
CD74HC541	★ 843 573-116
CD74HC563	★ 843 587-12
CD74HC564	★ 843 581-46
CD74HC573	★ 843 586-154
CD74HC574	★ 843 581-100
CD74HC640	★ 843 594-120
CD74HC643	★ 843 594-121
CD74HC646	★ 843 594-96
CD74HC648	★ 843 594-82
CD74HC670	★ 843 587-108
CD74HC688	★ 843 571-67
CD74HC73	581-186
CD74HC74	580-65
CD74HC75	586-65
CD74HC85	571-123
CD74HC86	585-142
CD74HCT00	★ 842 583-99
CD74HCT02	★ 842 585-59
CD74HCT04	★ 842 574-12
CD74HCT08	★ 842 582-140
CD74HCT10	★ 842 583-45
CD74HCT107	★ 842 581-187
CD74HCT109	★ 842 582-37
CD74HCT11	★ 842 582-99
CD74HCT112	★ 842 581-161
CD74HCT123	★ 842 589-109
CD74HCT132	★ 842 593-103
CD74HCT138	★ 842 578-166
CD74HCT139	★ 842 578-120
CD74HCT14	★ 842 593-143
CD74HCT147	★ 842 579-97
CD74HCT151	★ 842 588-175
CD74HCT153	★ 842 588-80
CD74HCT154	★ 842 579-84
CD74HCT157	★ 842 588-93
CD74HCT158	★ 842 588-110
CD74HCT160	★ 842 576-115
CD74HCT161	★ 842 574-99
CD74HCT162	★ 842 576-74
CD74HCT163	★ 842 574-63
CD74HCT164	★ 842 591-107
CD74HCT165	★ 842 591-80
CD74HCT166	★ 842
CD74HCT173	★ 842 580-108
CD74HCT174	★ 842 580-172
CD74HCT175	★ 842 580-144
CD74HCT190	★ 842 577-16
CD74HCT191	★ 842 574-152
CD74HCT192	★ 842 576-159
CD74HCT193	★ 842 574-153
CD74HCT194	★ 842 590-109
CD74HCT195	★ 842 590-140
CD74HCT20	★ 842 582-195
CD74HCT221	★ 842 589-150
CD74HCT238	★ 842
CD74HCT240	★ 842 594-23
CD74HCT241	★ 842 594-59
CD74HCT242	★ 842 593-68
CD74HCT243	★ 842 593-69
CD74HCT244	★ 842 593-177
CD74HCT245	★ 842 594-147

¶ Indicates page number in Application Note Directory.
★ Indicates additional data is provided on the page noted.

IC MASTER

RCA Solid State Division (Cont'd)

Device	Page-Line
CD74HCT251	★ 842 589-45
CD74HCT253	★ 842 588-72
CD74HCT257	★ 842 588-134
CD74HCT259	★ 842 587-68
CD74HCT27	★ 842 585-11
CD74HCT273	★ 842 581-6
CD74HCT280	★ 842 572-1
CD74HCT297	★ 842 592-74 592-115 ★ 842 3214-45
CD74HCT299	★ 842 591-156
CD74HCT32	★ 842 584-99
CD74HCT354	★ 842 589-46
CD74HCT356	★ 842 589-47
CD74HCT365	★ 842 573-67
CD74HCT366	★ 842 573-17
CD74HCT367	★ 842 573-68
CD74HCT368	★ 842 573-18
CD74HCT373	★ 842 586-155
CD74HCT374	★ 842 581-101
CD74HCT377	★ 842 581-24
CD74HCT384	571-148
CD74HCT390	577-57
CD74HCT393	575-34
CD74HCT4002	584-164
CD74HCT40102	576-189
CD74HCT40103	575-81
CD74HCT40104	590-122
CD74HCT40105	587-90
CD74HCT4015	590-65
CD74HCT4017	576-34
CD74HCT4020	575-143
CD74HCT4024	575-65
CD74HCT4040	575-108
CD74HCT4046	592-101
CD74HCT4060	575-172
CD74HCT4075	584-64
CD74HCT4094	591-57
CD74HCT42	★ 842 578-49
CD74HCT423	589-151
CD74HCT4511	580-13
CD74HCT4514	579-46
CD74HCT4515	579-47
CD74HCT4518	577-34
CD74HCT4520	575-44
CD74HCT4538	589-152
CD74HCT4543	579-140
CD74HCT533	587-13
CD74HCT534	581-47
CD74HCT540	573-117
CD74HCT541	573-118
CD74HCT563	587-14
CD74HCT564	581-48
CD74HCT573	586-156
CD74HCT574	581-102
CD74HCT640	594-122
CD74HCT643	594-123
CD74HCT645	594-148
CD74HCT646	594-97
CD74HCT648	594-83
CD74HCT670	587-109
CD74HCT688	571-68
CD74HCT73	★ 842 581-188
CD74HCT74	★ 842 580-66
CD74HCT75	★ 842 586-66
CD74HCT85	★ 842 571-124
CD74HCT86	★ 842 585-143
CD74HCU04	574-13
CDM53128	★ 1593 3787-2
CDM53256	★ 1593 3787-58
CDM5332	★ 1593 3784-100
CDM5333	★ 1593 3784-101
CDM5364	★ 1593 3785-73
CDM5365	3785-80
CDM6116-1	★ 1594 3779-12
CDM6116-2	★ 1594 3778-111
CDM6116A-3	★ 1594 3778-68
CDM6116A-9	★ 1594 3779-13
CDM6117-1	★ 1594 3779-14
CDM6117-2	★ 1594 3778-112
CDM6118-1	★ 1594 3779-15
CDM6118-2	★ 1594 3778-113
CDP1802	★ 1591 1279-2 ¶ 263-17 ¶ 269-1 ¶ 270-12 ¶ 271-13 ¶ 272-15 ¶ 273-4 ¶ 275-4 ¶ 275-11 ¶ 276-13 ¶ 276-14 ¶ 277-7
CDP1802A	★ 1591 1340-9 ¶ 263-17 ¶ 269-1 ¶ 270-12 ¶ 271-13 ¶ 272-15 ¶ 273-4 ¶ 275-4 ¶ 275-11 ¶ 276-13 ¶ 276-14 ¶ 277-7 ★ 1591 1279-3 ¶ 263-17 ¶ 269-1 ¶ 270-12 ¶ 271-13 ¶ 272-15 ¶ 273-4 ¶ 275-4 ¶ 275-11 ¶ 276-13 ¶ 276-14 ¶ 277-7
CDP1802AC	★ 1591 1340-10 ¶ 263-17 ¶ 269-1 ¶ 270-12 ¶ 271-13 ¶ 272-15 ¶ 273-4 ¶ 275-4 ¶ 275-11 ¶ 276-13 ¶ 276-14 ¶ 277-7 ★ 1591 1279-4 ¶ 263-17 ¶ 269-1 ¶ 270-12 ¶ 271-13 ¶ 272-15 ¶ 273-4 ¶ 275-4 ¶ 275-11, ¶ 276-13 ¶ 276-14 ¶ 277-7
CDP1802BC	★ 1591 1340-11 ¶ 263-17 ¶ 269-1 ¶ 270-12 ¶ 271-13 ¶ 272-15 ¶ 273-4 ¶ 275-4 ¶ 275-11 ¶ 276-13 ¶ 276-14 ¶ 277-7 ★ 1591 1279-5 ¶ 263-17 ¶ 269-1 ¶ 270-12 ¶ 271-13 ¶ 272-15 ¶ 273-4 ¶ 275-4 ¶ 275-11 ¶ 276-13 ¶ 276-14 ¶ 277-7
CDP1802C	★ 1591 1279-6 ¶ 263-17 ¶ 269-1 ¶ 270-12 ¶ 271-13 ¶ 272-15 ¶ 273-4 ¶ 275-4 ¶ 275-11 ¶ 276-13 ¶ 276-14 ¶ 277-7
CDP1802M	★ 1591 1279-7 ¶ 263-17 ¶ 269-1 ¶ 270-12 ¶ 271-13 ¶ 272-15 ¶ 273-4 ¶ 275-4 ¶ 275-11 ¶ 276-13 ¶ 276-14 ¶ 277-7
CDP18042CD	3761-1
CDP1804AC	★ 1591 1339-127 ¶ 264-4 ¶ 272-16 ¶ 275-1 ★ 1591 1279-8 ¶ 264-4 ¶ 272-16 ¶ 275-1
CDP1804PC	★ 1591 1339-128 ¶ 272-16 ¶ 275-1
CDP1805AC	★ 1591 1340-2 ¶ 264-4 ¶ 265-1 ¶ 272-16 ¶ 274-16 ★ 1591 1279-9 ¶ 264-4 ¶ 265-1 ¶ 272-16 ¶ 274-16
CDP1805C	★ 1591 1279-10 ¶ 272-16 ¶ 274-16
CDP1806AC	★ 1591 1340-1 ★ 1591 1279-11
CDP1806C	★ 1591 1279-12
CDP1821	★ 1594 588-17 ★ 1594 3774-108 ★ 1594 1340-60
CDP1821C	★ 1594 3775-6 ★ 1594 1340-61
CDP1822	★ 1594 588-37 ¶ 276-12 ¶ 323-9 ★ 1594 3773-22 ¶ 276-12 ¶ 323-9
CDP1822C	★ 1594 588-38 ¶ 276-12 ¶ 323-9 ★ 1594 3773-65 ¶ 276-12 ¶ 323-9
CDP1823	★ 1594 1340-59 ¶ 276-12 ¶ 323-9 ★ 1594 588-20
CDP1823C	★ 1594 3771-116 ★ 1594 1340-54 ★ 1594 3771-124
CDP1824	★ 1594 1340-55 ★ 1594 587-162 ¶ 276-10 ¶ 323-8 ★ 1594 3771-66 ¶ 276-10 ¶ 323-8 ★ 1594 1340-51 ¶ 276-10 ¶ 323-8
CDP1824C	★ 1594 587-163 ¶ 276-10 ¶ 323-8 ★ 1594 3771-67 ¶ 276-10 ¶ 323-8 ★ 1594 1340-52 ¶ 276-10 ¶ 323-8
CDP1826C	★ 1594 3771-94 ★ 1594 1340-53
CDP1831	★ 1593 3783-16 ¶ 276-11 ¶ 324-7 ★ 1593 1340-72 ¶ 276-11 ¶ 324-7
CDP1831C	★ 1593 3783-23 ¶ 276-11 ¶ 324-7 ★ 1593 1340-73 ¶ 276-11 ¶ 324-7
CDP1832	★ 1593 3783-17 ¶ 276-11 ¶ 324-7 ★ 1593 1340-74 ¶ 276-11 ¶ 324-7
CDP1832C	★ 1593 3783-24 ¶ 276-11 ¶ 324-7 ★ 1593 1340-75 ¶ 276-11 ¶ 324-7
CDP1833	★ 1593 3783-54 ¶ 324-8 ★ 1593 1340-84 ¶ 324-8
CDP1833C	★ 1593 3783-70 ¶ 324-8 ★ 1593 1340-85 ¶ 324-8
CDP1834	★ 1593 3783-55 ¶ 324-8 ★ 1593 1340-86 ¶ 324-8
CDP1834C	★ 1593 3783-71 ¶ 324-8 ★ 1593 1340-87 ¶ 324-8
CDP1835C	★ 1593 3783-120 ★ 1593 1340-94
CDP1837C	★ 1593 3785-36 ★ 1593 1340-95
CDP1851	★ 1595 1340-41 ¶ 267-17 ¶ 267-18
CDP1851C	★ 1595 1340-42 ¶ 267-17 ¶ 267-18
CDP1852	★ 1595 594-188 ¶ 268-1 ¶ 275-11 ★ 1595 1340-148 ¶ 268-1 ¶ 275-11
CDP1853	★ 1595 578-23 ★ 1595 1340-37
CDP1853C	★ 1595 578-24 ★ 1595 1340-38
CDP1854A	★ 1595 593-4 ¶ 268-2 ★ 1595 1340-102 ¶ 268-2
CDP1854AC	★ 1595 2686-67 ¶ 268-2 ★ 1595 1340-103 ¶ 268-2
CDP1855	★ 1595 1340-31 ¶ 276-9
CDP1855C	★ 1595 1340-32 ¶ 276-9
CDP1856	★ 1595 1340-120 ¶ 276-13
CDP1856C	★ 1595 1340-121 ¶ 276-13
CDP1857	★ 1595 1340-126 ¶ 276-13
CDP1857C	★ 1595 1340-127 ¶ 276-13
CDP1858	★ 1595 1340-132
CDP1858C	★ 1595 1340-133
CDP1859	★ 1595 1340-138
CDP1859C	★ 1595 1340-139
CDP1861	★ 1595 1340-108
CDP1861C	★ 1595 1340-109
CDP1862	★ 1595 1340-12
CDP1862C	★ 1595 1340-13
CDP1863	★ 1595 1340-45
CDP1863C	★ 1595 1340-46
CDP1864	★ 1595 1340-96
CDP1864C	★ 1595 1340-97
CDP1866	★ 1595 1340-16
CDP1866C	★ 1595 1340-17
CDP1867	★ 1595 1340-18
CDP1867C	★ 1595 1340-19
CDP1868	★ 1595 1340-20
CDP1868C	★ 1595 1340-21
CDP1869C	★ 1595 1340-110 ¶ 272-12 ¶ 277-7 ¶ 285-7 ¶ 316-6 ¶ 319-9

Arranged alphanumerically from left to right.

© IC MASTER 1984

RCA Solid State Division (Cont'd)

Device	Page-Line
CDP1870C	★ 1595
	1340-111
	¶ 271-5
	¶ 272-12
	¶ 277-7
	¶ 285-7
	¶ 316-6
	¶ 319-9
CDP1871A	★ 1595
	2667-8
	★ 1595
	1340-14
CDP1871AC	★ 1595
	2667-9
	★ 1595
	1340-15
CDP1872C	★ 1595
	594-189
	★ 1595
	1340-149
CDP1873C	★ 1595
	578-167
	★ 1595
	1340-115
CDP1874C	★ 1595
	595-1
	★ 1595
	1340-150
CDP1875C	★ 1595
	595-2
	★ 1595
	1340-151
CDP1876C	★ 1595
	1340-112
	¶ 271-5
	¶ 272-12
	¶ 277-7
	¶ 316-6
CDP1877	★ 1595
	1340-43
CDP1877C	★ 1595
	1340-44
CDP1878C	★ 1595
	1340-114
	¶ 254-7
CDP1879	★ 1595
	1340-62
	¶ 254-7
CDP1879C-1	★ 1595
	1340-63
	¶ 254-7
CDP1881	★ 1595
	1340-22
CDP1881C	★ 1595
	1340-23
CDP1882	★ 1595
	1340-24
	1340-140
CDP1882C	★ 1595
	1340-25
	1340-141
CDP1883	1340-26
	1340-142
CDP1883C	1340-143
CDP18S008	1815-14
CDP18S600	1955-4
CDP18S601A	1957-28
CDP18S602	1957-26
CDP18S603A	1957-29
CDP18S604B	1957-30
CDP18S605	1957-27
CDP18S606	1957-32
CDP18S607	1957-31
CDP18S608	1957-33
CDP18S609	1957-34
CDP18S610	1957-35
CDP18S693	1815-15
	¶ 278-11
CDP18S694	1815-16
CDP18S695	1815-17
CDP6402	★ 1595
	593-5
CDP6402D	★ 1595
	2686-77
CDP6402E	★ 1595
	2686-78
CDP6551	1340-104
CDP65516	★ 1593
	3784-47
CDP6805E2	★ 1592
	1342-8
	★ 1592
	1279-13
CDP6805F2	★ 1592
	1342-6
	★ 1592
	1279-14
CDP6805G2	★ 1592
	1342-7
	★ 1592
	1279-15
CDP6818	★ 1595
	1342-135
CDP6823	★ 1595
	1343-33
CDP6848	★ 1595
	1343-62
CDP6848C	★ 1595
	1343-115
CDP6851	★ 1595
CDP6853	★ 1595
	1340-105
CMM5104/1RZ	3780-76
CMM5114/1RZ	3776-108
C040061	3772-61
GP001AD	1337-80
GP201AD	1337-88
GP301AD	1337-90
GP302AD	1337-91
GP501AD	1337-83
GP502AD	1350-42
GP503AD	1337-93
GP504AD	1337-81
GP505AD	1337-89
GP506AD	1337-82
GP507AD	1337-85
GP508AD	1337-84
GP509AD	1337-87
GP510AD	1337-92
GP511AD	1337-86
General Reference	★ 1590
HCF4095B	581-140
HIT	578-96
MA10150	★ 4824
	4467-15
MA10350	★ 4824
	4467-20
MA10500	★ 4824
	4467-23
MA16250	★ 4824
	4467-17
MA30150	4469-42
MA30250	4469-43
MA60150	★ 4824
	4467-16
MA60250	★ 4824
	4467-18
MA60400	★ 4824
	4467-21
MA60550	★ 4824
	4467-24
MA60800	★ 4824
	4467-26
MB80C	1955-5
MB80N	1957-24
MN74HC00	583-100
MN74HC04	574-14
MS2000	1815-18
MS2000-Z	1815-19
MWS5101	★ 1594
MWS5101DL3	★ 1594
	3773-58
MWS5101EL2	★ 1594
	3773-20
MWS5101EL3	★ 1594
	3773-59
MWS5114-1	★ 1594
	3776-109
MWS5114-2	★ 1594
	3776-88
MWS5114-3	★ 1594
	3776-48
PA20254	★ 4824
	4467-19
PA20450	★ 4824
	4467-22
PA20850	★ 4824
	4467-27
PA21000	★ 4824
	4467-28
PA30650	★ 4824
	4467-25
PA40650	★ 4824
	4466-17
PA40850	★ 4824
	4466-18
PA41000	★ 4824
	4466-19
PA41200	★ 4824
	4466-20
PA60650	★ 4824
	4466-23
PA61200	★ 4824
	4466-25
PaCMOS-1	★ 4824
	4478-11
PaCMOS-2	★ 4824
	4478-10
PaCMOS-C2L	★ 4824
	4478-12
SOS-1 Library	★ 4824
	4478-14
SOS-2 Library	★ 4824
	4478-13
TCC-244	3773-23

SEEQ Technology, Inc.

Device	Page-Line
5133-2	★ 513
	★ 4137
	3766-81
5133-200	★ 513
	★ 4137
	3766-82
5133-250	★ 513
	★ 4137
	3766-92
5133-3	★ 513
	★ 4137
	3766-102
5133-300	★ 513
	★ 4137
	3766-103
5133-4	★ 513
	★ 4137
	3766-106
5133-450	★ 513
	★ 4137
	3766-115
5134	★ 4137
5143-2	★ 513
	3766-125
5143-200	★ 513
	3766-126
5143-250	★ 513
	3767-6
5143-3	★ 513
	3767-15
5143-300	★ 513
	3767-16
5143-4	★ 513
	3767-26
5143-450	★ 513
	3767-27
5213-250	3758-69
	¶ 318-6
5213-350	3758-90
	¶ 318-6
5213H-250	3758-70
	¶ 318-6
5213H-350	3758-91
	¶ 318-6
5223-200	3758-108
52B13-200	★ 516
	★ 4133
	3758-58
	¶ 319-1
52B13-250	★ 516
	★ 4133
	3758-73
	¶ 319-1
52B13-350	★ 516
	★ 4133
	3758-94
	¶ 319-1
52B13H-200	★ 516
	★ 4133
	3758-59
	¶ 319-1
52B13H-250	★ 516
	★ 4133
	3758-71
	¶ 319-1
52B13H-350	★ 516
	★ 4133
	3758-95
	¶ 319-1
52B23-200	★ 4133
	3758-109
52B23-250	★ 4133
	3758-112
52B23-3	★ 4133
	3758-114
52B23-300	★ 4133
	3758-115
52B23H-200	★ 4133
	3758-110
52B23H-250	★ 4133
	3758-113
52B23H-3	★ 4133
	3758-116
52B23H-300	★ 4133
	3758-117
52B33-200	3759-3
52B33-250	3759-8
52B33-3	3759-11
52B33-300	3759-12
52B33H-200	3759-4
52B33H-250	3759-9
52B33H-3	3759-13
52B33H-300	3759-14
53B33	★ 4133
71840	★ 1603
	1348-22
	★ 1603
	1279-29
72710	★ 1597
	1343-132
	★ 1597
	1279-30
72720	1343-133
8001	★ 1600
	1353-60
8002	★ 1598
	1353-63
	¶ 299-12
M5133-250	★ 513
	3766-93
M5133-450	★ 513
	3766-116
M5143-250	★ 513
	3767-7
M5143-450	★ 513
	3767-28
M5213-350	3758-92
M52B13-300	★ 516
	3758-82
M52B13H-300	★ 516
	3758-79

Semi Processes Inc.

Device	Page-Line
SP54HC00	★ 848
	583-102
SP54HC02	★ 848
	585-61
SP54HC04	★ 848
	574-16
SP54HC08	★ 848
	582-142
SP54HC10	★ 848
	583-46
SP54HC107	★ 848
	581-189
SP54HC109	★ 848
	582-38
SP54HC11	★ 848
	582-100
SP54HC112	★ 848
	581-162
SP54HC113	★ 848
	581-146
SP54HC125	★ 848
	572-53
SP54HC126	★ 848
SP54HC132	★ 848
SP54HC133	★ 848
	583-164
SP54HC138	★ 848
	578-168
SP54HC139	★ 848
	578-121
SP54HC14	★ 848
	593-144
SP54HC147	★ 848
	579-98
SP54HC148	★ 848
	579-89
SP54HC151	★ 848
	588-176
SP54HC153	★ 848
	588-59
SP54HC157	★ 848
	588-94
SP54HC158	★ 848
	588-111
SP54HC160	★ 848
	576-116
SP54HC161	★ 848
	574-100
SP54HC162	★ 848
	576-75
SP54HC163	★ 848
	574-64
SP54HC173	★ 848
	580-109
SP54HC174	★ 848
	580-173
SP54HC175	★ 848
	580-174
SP54HC176	★ 848
	592-59
SP54HC177	★ 848
SP54HC192	★ 848
	576-160
SP54HC193	★ 848
	574-154
SP54HC20	★ 848
	582-196
SP54HC240	★ 848
	594-24
SP54HC241	★ 848
	594-60
SP54HC244	★ 848
	583-103
SP54HC251	★ 848
	589-48
SP54HC253	★ 848
	588-73
SP54HC257	★ 848
	588-135
SP54HC258	★ 848
	588-144
SP54HC266	★ 848
	585-179
SP54HC27	★ 848
	585-12
SP54HC273	★ 848
	581-7
SP54HC280	★ 848
	572-2
SP54HC298	★ 848
	588-151
SP54HC30	★ 848
	583-143
SP54HC32	★ 848
	584-101
SP54HC365	★ 848
	573-69
SP54HC373	★ 848
	586-157
SP54HC374	★ 848
	581-103
SP54HC393	★ 848
	575-35
SP54HC4017	★ 848
	576-35
SP54HC4020	★ 848
	575-144
SP54HC42	★ 848
	578-50
SP54HC533	★ 848
	587-15
SP54HC540	★ 848
	573-119
SP54HC541	★ 848
	573-120
SP54HC573	★ 848
	586-158
SP54HC574	★ 848
	581-104
SP54HC73	★ 848
	581-190
SP54HC74	★ 848
	580-68
SP54HC75	★ 848
	586-67
SP54HC76	★ 848
	582-39
SP54HC77	★ 848
	586-42
SP54HC80	★ 848
	571-72
SP54HC82	★ 848
	571-29
SP54HC86	★ 848
	585-144
SP54HC90	★ 848
	576-52
SP54HC93	★ 848
	575-45
SP54SC240	594-25
SP54SC241	594-61
SP54SC244	593-178
SP54SC245	594-149
SP54SC373	586-159
SP54SC374	581-105
SP54SC573	586-160
SP54SC574	581-106
SP7000	★ 4826
	4465-1
SP7001	★ 4826
	4465-2
SP7002	★ 4826
	4465-3
SP7003	★ 4826
	4465-4
SP7004	★ 4826
	4465-5
SP7005	★ 4826
	4465-6
SP7010	★ 4826
	4465-7
SP7210	★ 4826
	4465-8
SP74HC00	★ 848
	583-103
SP74HC02	★ 848
	585-62
SP74HC04	★ 848
	574-17
SP74HC08	★ 848
	582-143
SP74HC10	★ 848
	583-47
SP74HC107	★ 848
	581-191
SP74HC109	★ 848
	582-40
SP74HC11	★ 848
	582-101
SP74HC112	★ 848
	581-163
SP74HC113	★ 848
	581-147
SP74HC125	★ 848
	572-54
SP74HC126	★ 848
	572-46
SP74HC132	★ 848
	593-104
SP74HC133	★ 848
	583-165
SP74HC138	★ 848
	578-169
SP74HC139	★ 848
	578-122
SP74HC14	★ 848
	593-145
SP74HC147	★ 848
	579-99
SP74HC148	★ 848
	579-90
SP74HC151	★ 848
	588-177
SP74HC153	★ 848
	588-60
SP74HC157	★ 848
	588-95
SP74HC158	★ 848
	588-112
SP74HC160	★ 848
	576-117
SP74HC161	★ 848
	574-101

¶ Indicates page number in Application Note Directory.
★ Indicates additional data is provided on the page noted.

IC MASTER

Device	Page-Line
Semi Processes Inc. (Cont'd)	
SP74HC162	★ 848 576-76
SP74HC163	★ 848 574-65
SP74HC164	591-108
SP74HC167	592-140
SP74HC173	★ 848 580-110
SP74HC174	★ 848 580-175
SP74HC175	★ 848 580-145
SP74HC176	★ 848 592-60
SP74HC177	★ 848 592-61
SP74HC182	571-97
SP74HC192	★ 848 576-161
SP74HC193	★ 848 574-155
SP74HC194	590-110
SP74HC195	590-141
SP74HC20	★ 848 582-197
SP74HC238	578-143
SP74HC239	578-142
SP74HC240	★ 848 594-26
SP74HC241	★ 848 594-62
SP74HC242	593-47
SP74HC244	★ 848 593-179
SP74HC251	★ 848 589-49
SP74HC253	★ 848 588-74
SP74HC257	★ 848 588-136
SP74HC258	★ 848 588-145
SP74HC266	★ 848 585-180
SP74HC27	★ 848 585-13
SP74HC273	★ 848 581-8
SP74HC280	★ 848 572-3
SP74HC298	★ 848 588-152
SP74HC30	★ 848 583-144
SP74HC32	★ 848 584-102
SP74HC365	★ 848 573-70
SP74HC367	573-71
SP74HC373	★ 848 586-161
SP74HC374	★ 848 581-107
SP74HC393	★ 848 575-36
SP74HC4002	584-165
SP74HC4017	★ 848 576-36
SP74HC4020	★ 848 575-145
SP74HC4040	575-109
SP74HC42	★ 848 578-51
SP74HC533	★ 848 587-16
SP74HC534	581-49
SP74HC540	★ 848 573-121
SP74HC541	★ 848 573-122
SP74HC573	★ 848 586-162
SP74HC574	★ 848 581-108
SP74HC73	★ 848 581-192
SP74HC74	★ 848 580-69
SP74HC75	★ 848 586-68
SP74HC76	★ 848 582-41
SP74HC77	★ 848 586-43
SP74HC80	★ 848 571-73
SP74HC82	★ 848 571-30
SP74HC83	571-48
SP74HC85	571-125
SP74HC86	★ 848 585-145
SP74HC90	★ 848 576-53
SP74HC93	★ 848 575-46
SP74HCT138	★ 844 578-170
SP74HCT139	★ 844 578-123
SP74HCT240	★ 844 594-27
SP74HCT241	★ 844 594-63
SP74HCT244	★ 844 593-180
SP74HCT245	★ 844 594-150
SP74HCT373	★ 844 586-163
SP74HCT374	★ 844 581-109
SP74HCT502	★ 844 592-138
SP74HCT503	★ 844 592-139
SP74HCT504	592-137
SP74HCT540	★ 844 573-123
SP74HCT541	★ 844 573-124
SP74HCT573	★ 844 586-164
SP74HCT574	★ 844 581-110
SP74HCT670	★ 844 587-110
SP74SC138	578-171
SP74SC139	578-124
SP74SC240	594-28
SP74SC241	594-64
SP74SC244	593-181
SP74SC245	594-151
SP74SC373	586-165
SP74SC374	581-111
SP74SC540	573-125
SP74SC541	573-126
SP74SC573	586-166
SP74SC574	581-112
SP74SC670	587-111
SP75HC132	593-105
SP75HC165	591-81
SP810H8	★ 4826 4483-51
SP810L8	★ 4826 4483-52
SP812H6	★ 4826 4483-53
SP812L6	★ 4826 4483-54
SP814H4	★ 4826 4483-55
SP814L4	★ 4826 4483-56
SP816C1	★ 4826 4483-108
SP816H2	★ 4826 4483-57
SP816L2	★ 4826 4483-58
SP816L8	★ 4826 4483-59
SP816R4	★ 4826 4483-60
SP816R6	★ 4826 4483-61
SP816R8	★ 4826 4483-62
Si-Fab	
FCT20x4	★ 4827 4483-63
HCT10H8	★ 4827 4483-64
HCT10L8	★ 4827 4483-65
HCT12L10	★ 4827 4483-66
HCT12L8	★ 4827 4483-67
HCT14H4	★ 4827 4483-68
HCT14L4	★ 4827 4483-69
HCT14L8	★ 4827 4483-70
HCT16A4	★ 4827 4483-71
HCT16C1	★ 4827 4483-72
HCT16H2	★ 4827 4483-73
HCT16L2	★ 4827 4483-74
HCT16L6	★ 4827 4483-75
HCT16L8	★ 4827 4483-76
HCT16R4	★ 4827 4483-77
HCT16R6	★ 4827 4483-78
HCT16R8	★ 4827 4483-79
HCT16X4	★ 4827 4483-80
HCT18L4	★ 4827 4483-81
HCT20C1	★ 4827 4483-82
HCT20L10	★ 4827 4483-83
HCT20L2	★ 4827 4483-84
HCT20x10	★ 4827 4483-85
HCT20x8	★ 4827 4483-86
Signetics	
100101	★ 858 599-57
100102	★ 858 599-60
100107	★ 858 599-63
100112	★ 858 599-39
100113	★ 858 599-36
100114	★ 858 600-9
100117	★ 858 599-51
100118	★ 858 599-54
100122	★ 858 599-22
100123	★ 858 599-42
100126	★ 858 599-34
100131	★ 858 599-45
100136	★ 858 599-29
100141	★ 858 599-109
100145	★ 858 3770-73
100150	★ 858 599-68
100151	★ 858 599-48
100155	★ 858 599-98
100158	★ 858 599-106
100160	★ 858 600-6
100163	★ 858 599-92
100164	★ 858 599-101
100165	★ 858 599-131
100166	★ 858 599-18
100170	★ 858 599-32
100171	★ 858 599-95
100175	★ 858 599-114
100180	★ 858 599-15
100181	★ 858 599-13
100255	★ 858 599-115
100415	3774-21
100415A	3774-17
100415B	3774-10
100422	3772-82
100422A	3772-83
100422B	3772-72
100470	3779-58
100470A	3779-45
100474	599-83
100474A	599-84
10100	★ 858 597-45
10101	★ 858 597-68
10102	★ 858 597-39
10103	★ 858 597-8
10104	★ 858 596-145
10105	★ 858 597-61
10106	★ 858 597-32
10107	★ 858 597-109
10108	★ 858 596-137
10109	★ 858 597-53
10110	★ 858 597-2
10111	★ 858 597-18
10112	★ 858 597-25
10113	★ 858 597-102
10114	★ 858 598-147
10115	★ 858 598-159
10116	★ 858 598-148
10117	★ 858 597-89
10118	★ 858 597-75
10119	★ 858 597-82
10121	★ 858 597-96
10123	★ 858 596-101
10124	★ 858 598-120
10125	★ 858 598-112
10129	★ 858 598-153
10130	★ 858 597-117
10131	★ 858 596-117
10132	★ 858 597-129
10133	★ 858 597-143
10134	★ 858 597-123
10135	★ 858 596-136
10136	★ 858 596-57
10137	★ 858 596-64
10139	597-160
10141	★ 858 598-99
	★ 858 3789-33
10145	598-7
	3770-78
10149	★ 858 597-165
	★ 858 3760-66
10155	★ 858 597-158
	★ 858 3770-59
10158	★ 858 598-83
10159	★ 858 598-77
10160	★ 858 599-7
10161	★ 858 596-82
10162	★ 858 596-74
10164	★ 858 598-90
10165	★ 858 598-167
10171	★ 858 596-94
10172	★ 858 596-88
10173	★ 858 597-148
10174	★ 858 598-70
10175	★ 858 597-155
10176	★ 858 596-129
10179	★ 858 596-8
10180	★ 858 596-15
10181	★ 858 596-28
10188	★ 858 596-38
10189	★ 858 596-43
10192	★ 858 596-105
10210	★ 858 597-19
10211	★ 858 597-20
10216	★ 858 598-149
10231	★ 858 596-118
10415	598-46
10415A	3774-29
10415B	3774-12
10422	3772-87
10422A	3772-86
10422B	3772-76
10470	3779-61
10470A	3779-52
10474	598-47
	598-51
10474A	598-48
	598-52
23128-15	★ 4200
23128-20	★ 4200 3786-117
23128-25	★ 4202 3787-8
23128-30	★ 4202 3787-16
23128-45	★ 4202
23256A	★ 4204
23256A-20	3787-55
23256A-25	3787-71
23256A-30	3787-80
23256A-35	3787-85
23256A-45	3787-95
2332-20	3784-64
2332-25	3784-72
2332-30	3784-89
2332-45	3785-18
2364-15	★ 4196
2364-20	★ 4196 3785-67
2364-25	3785-107
2364-30	3785-114
2364-35	3786-53
2364-45	3786-93
2616-30	3783-124
2616-35	3784-18
2616-45	3784-39
2616A-25	3783-118
2632A-20	3784-65
2632A-25	3784-73
2632A-30	3784-90
2632A-35	3784-118
2632A-45	3785-19
2632AE-30	3784-91
2632AM-35	3784-119
2632AM-45	3785-20
2650A	1279-32
2650A-1	1279-33
2664-15	★ 4198
2664-20	★ 4198 3785-57
2664-25	3785-93
2664A-20	3785-58
2664A-25	3785-94
2664A-30	3786-12
2664A-45	3786-79
2664AE-30	3786-13
2664AM-35	3786-54
2664AM-45	3786-80
26810	2685-69
26814	2685-70
26818	2685-71
26864	★ 4206
27128	★ 4194
27C128	★ 4191
27C64	★ 4187
3207A	2682-165
3207A-1	2682-166
32128-45	3787-32
5400	★ 528 ★ 860 621-158
5402	★ 860 624-50
5403	★ 860 621-90
5404	★ 528 ★ 860 607-49
5405	★ 860 606-125
5406	★ 860 614-76
5407	★ 860 614-53
5408	★ 860 619-87
5410	★ 860 620-131
54107	★ 860 617-111
54109	★ 860 617-46
5411	★ 860
54116	★ 860 625-64
54121	★ 528 ★ 860 630-103
54123	★ 528 ★ 861 630-166
54125	★ 861 605-168
54126	★ 528 ★ 861 605-142
54128	★ 861 2671-25
5413	★ 860 637-134
54132	★ 861 638-23

Arranged alphanumerically from left to right.

© IC MASTER 1984

Signetics (Cont'd)

5414 ★ 860, 638-58
54145 ★ 861, 612-55
54147 ★ 861, 639-115
54148 ★ 861, 639-36
54150 ★ 861, 630-82
54151 ★ 528, ★ 861, 629-153
54153 ★ 528, ★ 861, 628-36
54154 ★ 528, ★ 861, 613-118
54155 ★ 861
54156 ★ 861, 612-169
54157 ★ 528, ★ 861, 629-12
54158 ★ 861, 628-125
5416 ★ 860, 614-66
54160 ★ 861, 610-33
54161 ★ 528, ★ 861, 608-1
54163 ★ 528, ★ 861, 608-49
54164 ★ 528, ★ 861, 632-29, ★ 528, ★ 861, 3790-97
54165 ★ 861, 632-82, ★ 861, 3790-32
54166 ★ 861, 632-102, ★ 861, 3790-45
5417 ★ 860, 614-43
54170 ★ 861, 627-10
54173 ★ 861, 615-128
54174 ★ 528, ★ 861, 615-154
54175 ★ 528, ★ 861, 615-44
54180 ★ 528, ★ 861, 639-75
54181 ★ 861, 604-23
54190 ★ 861, 611-77
54191 ★ 861, 609-36
54192 ★ 861, 611-41
54193 ★ 528, ★ 861, 609-89
54194 ★ 861, 631-156, ★ 861, 3788-81
54195 ★ 861, 631-53
54199 ★ 861, 632-69
5420 ★ 528, ★ 860, 620-45
5421 ★ 860

54221 ★ 861, 630-141
54225 ★ 861
5425 ★ 860, 623-140
5426 ★ 528, ★ 860, 614-1
5427 ★ 860, 623-179
54279 ★ 862, 625-133
5428 ★ 860, 624-51
54298 ★ 862, 629-64
5430 ★ 860
5432 ★ 528, ★ 860, 623-83
5433 ★ 860, 624-21
54365A ★ 528, ★ 862, 606-32
54366A ★ 528, ★ 862, 606-174, 614-92
54367A ★ 528, ★ 862, 606-33, 614-93
54368A ★ 528, ★ 862, 606-175
5437 ★ 860, 621-45
5438 ★ 860, 620-187
5439 ★ 860, 620-188
5440 ★ 860, 619-155
5442 ★ 860, 612-86
5445 ★ 860, 612-45
5450 ★ 860, 622-104
5451 ★ 860, 622-122
5460 622-164
5473 ★ 528, ★ 860, 617-112
5474 ★ 528, ★ 860, 614-159
5475 ★ 860, 625-89
5476 ★ 528, ★ 860, 617-163
5483 ★ 860, 605-79
5485 ★ 528, ★ 860, 603-63
5486 ★ 860, 624-165
5490 ★ 860, 609-135
5491 ★ 860, 632-143, ★ 860, 3790-121
5492 ★ 860, 611-119
5493 ★ 528, ★ 860, 608-113
5494 ★ 860, 3789-62
5495A ★ 860, 631-91, ★ 860, 3788-82

5496 ★ 528, ★ 860, 632-6, ★ 528, ★ 860, 3789-88
54F00 621-179
54F04 607-73
54F139 612-134
54F157 629-28
54F158 628-137
54F181 604-43
54F20 620-62
54F240 ★ 881, 633-160
54F241 ★ 881, 634-34
54F242 633-96
54F243 633-97
54F244 ★ 882, 634-87
54F245 ★ 883, 635-102
54F257 628-171
54F258 628-98
54F280 639-87
54F280A ★ 884
54F365 ★ 885, 606-48
54F366 ★ 885
54F367 ★ 885, 606-49
54F368 ★ 885, 607-3
54F373 ★ 886, 626-64
54F374 ★ 886, 616-121
54F521 603-98
54F533 626-124
54F534 616-52
54F604 ★ 887, 625-171
54F605 ★ 887, 625-172
54F630 ★ 888, 2665-43
54F631 ★ 888, 2665-44
54F64 623-57
54F646 ★ 889, 636-20
54F647 ★ 889, 635-174
54F648 ★ 889, 636-21
54F649 ★ 889, 635-175
54F655 ★ 890, 607-106
54F656 ★ 890, 606-93
54F86 624-175
54LS00 ★ 529, 622-4
54LS01 621-133
54LS02 ★ 529, 624-100
54LS03 621-134
54LS04 ★ 529, 607-92
54LS05 606-153
54LS08 ★ 529, 619-130
54LS09 619-71
54LS10 ★ 529, 620-165
54LS107 ★ 529, 617-145
54LS109 617-75
54LS11 619-29
54LS112 618-67
54LS113 618-24
54LS125A 606-10
54LS126A 605-157
54LS13 637-154
54LS132 ★ 529, 638-39
54LS132A ★ 529, 638-40
54LS136 624-145

54LS138 ★ 529, 613-68
54LS139 ★ 529, 612-148
54LS14 ★ 529, 638-76
54LS151 629-179
54LS153 ★ 529, 628-63
54LS154 ★ 529, 613-127
54LS155 613-31
54LS156 612-183
54LS157 ★ 529, 629-42
54LS158 628-150
54LS160A 610-63
54LS161A ★ 529, 608-31
54LS162A 610-111
54LS163A ★ 529, 608-76
54LS164 ★ 529, 632-51, ★ 529, 3790-98
54LS164B ★ 529, 632-52
54LS168A 611-19
54LS169A 609-17
54LS170 3770-36
54LS173 615-141
54LS174 ★ 529, 615-181
54LS175 ★ 529, 615-68
54LS181 604-54
54LS190 ★ 529, 611-102
54LS191 ★ 529, 609-66
54LS192 ★ 530, 611-67
54LS193 ★ 530, 609-113
54LS194A ★ 530, 631-177
54LS195A ★ 530, 3789-5
54LS197 ★ 530, 607-158
54LS20 ★ 529, 620-82
54LS21 618-144
54LS221 630-151
54LS240 ★ 530, 634-5
54LS241 ★ 530, 634-55
54LS244 ★ 530, 634-99
54LS245 ★ 530, 635-123
54LS251 630-65
54LS251A 630-58
54LS253 628-14
54LS256 628-111
54LS257A ★ 530, 628-184
54LS258A ★ 530, 628-112
54LS259 626-36
54LS26 621-29
54LS260A 623-161
54LS261 604-116
54LS266 ★ 530, 625-43
54LS27 624-17
54LS273 ★ 530, 616-81
54LS279 625-148
54LS28 624-101
54LS283 605-111
54LS290 ★ 530, 609-161
54LS293 ★ 530, 608-141
54LS295B ★ 530, 631-37
54LS298 ★ 530, 629-101
54LS30 622-52

54LS301 627-97, 3772-46
54LS32 ★ 529, 623-116
54LS33 624-36
54LS352 627-159
54LS353 627-125
54LS363 ★ 530, 626-79
54LS364 ★ 530, 616-32
54LS365A ★ 530, 606-74
54LS366A 607-27
54LS367A ★ 530, 606-75
54LS368A ★ 530, 607-28
54LS37 ★ 529, 621-65
54LS373 ★ 530, 626-80
54LS374 ★ 530, 616-135
54LS375 ★ 530, 625-107
54LS377 ★ 530, 616-162
54LS378 616-18
54LS38 621-12
54LS390 610-145
54LS393 ★ 530, 608-95
54LS395A ★ 530, 631-137
54LS40 619-182
54LS42 ★ 529, 612-103
54LS445 612-35
54LS490 ★ 530, 610-146
54LS51 622-145
54LS54 623-49
54LS540 2670-3
54LS541 634-56
54LS623 636-85
54LS641 635-63, 2677-8
54LS642 2677-9
54LS645 635-124
54LS670 ★ 530, 627-37, ★ 530, 3770-51
54LS73 ★ 529, 617-146
54LS74A ★ 529, 615-23
54LS75 ★ 529, 625-108
54LS76 617-179
54LS83A 605-112
54LS85 ★ 529, 603-64
54LS86 ★ 529, 625-7
54LS90 ★ 529, 609-162
54LS92 611-133
54LS93 ★ 529, 608-142
54LS95B ★ 529, 631-107
54LS96 ★ 529, 632-12, ★ 529, 3789-89
54S00 ★ 531, 622-13
54S02 ★ 531, 624-112
54S04 ★ 531, 607-101
54S05 606-162
54S08 ★ 531, 619-138
54S10 ★ 531, 620-174
54S11 ★ 531, 619-38
54S112 ★ 531, 618-76

54S113 ★ 531, 618-33
54S13 637-160
54S133 ★ 531, 622-85
54S134 622-67
54S135 624-125
54S139 612-157
54S140 ★ 531, 613-138, ★ 531, 2670-45
54S151 ★ 531, 629-190
54S153 ★ 531, 628-71
54S157 ★ 531, 629-51
54S158 ★ 531, 628-159
54S172 627-42
54S174 615-190
54S175 615-77
54S181 ★ 531, 604-67
54S182 604-103
54S189 ★ 532, 3771-4
54S195 631-77
54S20 620-91
54S240 ★ 531, 634-6
54S241 ★ 531, 634-65
54S244 ★ 531, 634-105
54S251 630-66
54S253 628-22
54S257 628-192
54S258 628-121
54S260 623-167
54S273 ★ 531, 616-87
54S280 639-103
54S301 ★ 532, 3772-47
54S32 623-124
54S350 638-142
54S37 621-69
54S373 626-94
54S374 ★ 531, 616-145
54S38 621-16
54S40 ★ 531, 619-191
54S51 ★ 531, 622-154
54S534 616-61
54S64 623-64
54S65 623-73
54S74 ★ 531, 615-31
54S85 ★ 531, 603-74
54S86 ★ 531, 625-17
7400 ★ 860, 621-159
7402 ★ 860, 624-52
7403 ★ 860, 621-91
7404 ★ 860, 607-50
7405 ★ 860, 606-126
7406 ★ 860, 614-77
7407 ★ 860, 614-54
7408 ★ 860, 619-88
7410 ★ 860, 620-132
74107 ★ 860, 617-113
74109 ★ 860, 617-47
7411 ★ 860, 618-180
74116 ★ 860, 625-65

¶ Indicates page number in Application Note Directory.
★ Indicates additional data is provided on the page noted.

IC MASTER

Device	Page-Line
Signetics (Cont'd)	
74121	★ 860 630-104
74123	★ 861 630-167
74125	★ 861 605-169
74126	★ 861 605-143
74128	★ 861 614-26
	★ 861 2671-23
7413	★ 860 637-135
74132	★ 861 638-24
7414	★ 860 638-59
74145	★ 861 612-56
74147	★ 861 639-116
74148	★ 861 639-37
74150	★ 861 630-83
74151	★ 861 629-154
74153	★ 861 628-37
74154	★ 861 613-119
74155	★ 861 613-18
74156	★ 861 612-170
74157	★ 861 629-13
74158	★ 861 628-126
7416	★ 860 614-67
74160	★ 861 610-34
74161	★ 861 608-2
74163	★ 861 608-50
74164	★ 861 632-30
	★ 861 3790-99
74165	★ 861 632-83
	★ 861 3790-33
74166	★ 861 632-103
	★ 861 3790-46
7417	★ 860 614-44
74170	★ 861 627-11
74173	★ 861 615-129
74174	★ 861 615-155
74175	★ 861 615-45
74180	★ 861 639-76
74181	★ 861 604-24
74190	★ 861 611-78
74191	★ 861 609-37
74192	★ 861 611-42
74193	★ 861 609-90
74194	★ 861 631-157
	★ 861 3788-83
74195	★ 861 631-54
	★ 861 3789-6
74199	★ 861 632-70
	★ 861 3789-119
7420	★ 860 620-46
7421	★ 860 618-119
74221	★ 861 630-142
7425	★ 860 623-141
7426	★ 860 614-2
7427	★ 860 623-180
74279	625-134
7428	★ 860 624-53
74298	★ 862 629-65
7430	★ 860 622-27
7432	★ 860 623-84
7433	★ 860 624-22
74365A	★ 862 606-34
74366A	★ 862 606-176 614-94
74367A	★ 862 606-35 614-95
74368A	★ 862 606-177
7437	★ 860 621-46
74379	★ 862
7438	★ 860 620-189
7439	★ 860 620-190
7440	★ 860 619-156
7442	★ 860 612-87
7445	★ 860 612-46
7450	★ 860 622-105
7451	★ 860 622-123
7473	★ 860 617-114
7474	★ 860 614-160
7475	★ 860 625-90
7476	★ 860 617-164
7483	★ 860 605-80
7485	★ 860 603-65
7486	★ 860 624-166
7490	★ 860 609-136
7491	★ 860 632-144
	★ 860 3790-122
7492	★ 860 611-120
7493	★ 860 608-114
7494	★ 860 631-145
	★ 860 3789-63
7495A	★ 860 631-92
	★ 860 3788-84
7496	★ 860 632-7
	★ 860 3789-90
74F00	★ 879 621-180
74F02	★ 879 624-80
74F04	★ 879 607-74
74F08	★ 879 619-112
74F10	★ 879 620-147
74F109	★ 879 617-63
74F11	★ 879 619-12
74F112	★ 879 618-51
74F113	★ 879 618-12
74F114	★ 879 618-88
74F13	★ 879 637-140
74F132	★ 879 638-29
74F138	★ 879 613-55
74F139	★ 879 612-135
74F14	★ 879 638-64
74F148	★ 879 639-44
74F151	★ 879 629-167
74F153	★ 879 628-50
74F157	★ 879 629-29
74F158	★ 879 628-138
74F160	★ 879 610-52
74F161	★ 879 608-20
74F162	★ 879 610-100
74F163	★ 879 608-65
74F164	★ 879 632-39
74F168	★ 879 611-5
74F169	★ 879 609-6
74F174	★ 879 615-167
74F175	★ 879 615-56
74F181	★ 879 604-44
74F182	★ 879 604-94
74F190	★ 879 611-89
74F191	★ 879 609-55
74F192	★ 879 611-53
74F193	★ 879 609-101
74F194	★ 879 631-168
74F195	★ 879 631-60
74F198	★ 879 632-63
74F20	★ 879 620-63
74F240	★ 879
	★ 881 633-161
74F241	★ 879
	★ 881 634-35
74F242	★ 879 633-98
74F243	★ 879 633-99
74F244	★ 879
	★ 882 634-88
74F245	★ 879
	★ 883 635-102
74F251	★ 879 630-46
74F253	★ 879 628-2
74F256	★ 879
74F257	★ 879 628-172
74F258	★ 879 628-99
74F259	★ 879 626-25
74F269	★ 879 609-7
74F273	★ 879 616-71
74F280	639-88
74F280A	★ 879
	★ 884 639-89
74F283	★ 879 605-89
74F298	★ 879 629-74
74F299	★ 879 632-177
74F32	★ 879 623-103
74F322	★ 879 632-123
74F323	★ 879 632-178
74F35	621-1
74F350	★ 879 638-139
74F352	★ 879 627-149
74F353	★ 879 627-115
74F365	★ 879
	★ 885 606-50
74F366	★ 879
	★ 885 607-4 614-102
74F367	★ 879
	★ 885 606-51
74F368	★ 879
	★ 885 607-5
74F37	★ 879 621-53
74F373	★ 879
	★ 886 626-65
74F374	★ 879
	★ 886 616-122
74F377	★ 879 616-153
74F378	★ 879 616-5
74F379	★ 879 615-100
74F38	★ 879 621-2
74F395	★ 879 631-131
74F398	★ 879 629-75
74F399	★ 879 629-76
74F40	★ 879 619-163
74F521	★ 879 603-99
74F524	★ 879 603-33
74F533	★ 879 626-125
74F534	★ 879 616-53
74F545	★ 879 635-104
74F568	★ 879 610-181
74F569	★ 879 610-182
74F579	★ 879 610-183
74F588	★ 880 634-120
74F595	★ 880 632-125
74F596	★ 880 632-126
74F597	★ 880 632-115
74F598	★ 880 632-116
74F604	★ 880
	★ 887 625-173
74F605	★ 880
	★ 887 625-174
74F620	★ 880 636-80
74F621	★ 880 636-46
74F622	★ 880 636-47
74F623	★ 880 636-81
74F630	★ 880
	★ 888 2665-45
74F631	★ 880
	★ 888 2665-46
74F64	★ 879 623-58
74F646	★ 880
	★ 889 636-22
74F647	★ 880
	★ 889 635-176
74F648	★ 880
	★ 889 636-23
74F649	★ 880
	★ 889 635-177
74F655	★ 880
	★ 890 607-107
74F656	★ 880
	★ 890 606-94
74F657	★ 880 635-151
74F673	★ 880 633-56
	★ 880 3791-29
74F674	★ 880 633-43
	★ 880 3791-30
74F675	★ 880 633-53
	★ 880 3791-31
74F676	★ 880 633-50
	★ 880 3791-32
74F74	★ 879 615-2
74F779	★ 880 608-180
74F85	★ 879 603-72
74F86	★ 879 624-176
74HC00	★ 907 583-106
74HC02	★ 907 585-65
74HC04	★ 907 574-20
74HC08	★ 907 582-146
74HC10	★ 907 583-50
74HC107	★ 907 581-193
74HC109	★ 907 582-44
74HC11	★ 907 582-104
74HC112	★ 907 581-164
74HC123	★ 907 589-112
74HC132	★ 907 593-108
74HC138	★ 907 578-172
74HC139	★ 907 578-125
74HC14	★ 907 593-148
74HC147	★ 907 579-100
74HC151	★ 907 588-178
74HC153	★ 907 589-20
74HC154	★ 907 579-85
74HC157	★ 907 588-96
74HC158	★ 907 588-113
74HC160	★ 907 588-114
74HC161	★ 907 574-104
74HC162	★ 907 576-79
74HC163	★ 907 574-68
74HC164	★ 907 591-109
74HC165	★ 907 591-82
74HC166	★ 907 591-83
74HC173	★ 907 580-113
74HC174	★ 907 580-178
74HC175	★ 907 580-146
74HC190	★ 907 576-182
74HC191	★ 907 574-158
74HC192	★ 907 576-166
74HC193	★ 907 574-159
74HC194	★ 907 590-113
74HC195	★ 907 590-142
74HC20	★ 907 583-1
74HC221	★ 907 589-153
74HC238	★ 907 578-173
74HC240	★ 907 594-29
74HC241	★ 907 594-65
74HC242	★ 907 593-70
74HC243	★ 907 593-71
74HC244	★ 907 593-182
74HC245	★ 907 594-152
74HC251	★ 907 589-21
74HC253	★ 907 588-48
74HC257	★ 907 588-139
74HC259	★ 907 587-71
74HC27	★ 907 585-16
74HC273	★ 907 581-9
74HC280	★ 907 572-4
74HC297	★ 907 592-75
74HC299	★ 907 591-157

Arranged alphanumerically from left to right.

© IC MASTER 1984

Signetics (Cont'd)

Device	Page-Line
74HC32	★ 907 584-105
74HC354	★ 907 589-50
74HC356	★ 907 589-51
74HC365	★ 907 573-72
74HC366	★ 908 573-19
74HC367	★ 908 573-73
74HC368	★ 908 573-20
74HC373	★ 908 586-167
74HC374	★ 908 581-113
74HC377	★ 908 581-25
74HC384	★ 908 571-149
74HC390	★ 908 577-58
74HC393	★ 908 575-37
74HC4002	★ 908 584-168
74HC40103	★ 908 575-82
74HC40104	590-123
74HC40105	★ 908 587-91
74HC4015	★ 908 590-68
74HC4016	★ 908
74HC4017	★ 908 576-39
74HC4020	★ 908 575-148
74HC4024	★ 908 575-68
74HC4040	★ 908 575-112
74HC4046	★ 908 592-104
74HC4049	★ 908 572-107
74HC4050	★ 908 572-152
74HC4051	★ 908 595-19
74HC4052	★ 908 593-39
74HC4053	★ 908 593-44
74HC4060	★ 908 575-175
74HC4066	★ 908
74HC4067	★ 908
74HC4075	★ 908 584-67
74HC4094	★ 908 591-60
74HC42	★ 907 578-54
74HC423	★ 908 589-154
74HC4511	★ 908 580-16
74HC4514	★ 908 579-52
74HC4515	★ 908 579-53
74HC4518	★ 908 577-37
74HC4520	★ 908 575-15
74HC4538	★ 908 589-155
74HC4543	★ 908 579-141
74HC533	★ 908 587-17
74HC534	★ 908 581-50
74HC540	★ 908 573-127
74HC541	★ 908 573-128
74HC563	★ 908 587-18
74HC564	★ 908 581-51
74HC573	★ 908 586-168
74HC574	★ 908 581-114
74HC640	★ 908 594-124
74HC643	★ 908 594-125
74HC646	★ 908 594-98
74HC648	★ 908 594-84
74HC670	★ 908 587-112
74HC688	★ 908 571-69
74HC73	★ 907 581-194
74HC74	★ 907 580-72
74HC75	★ 907 586-71
74HC85	★ 907 571-128
74HC86	★ 907 585-150
74HCT00	★ 907 583-107
74HCT02	★ 907 585-66
74HCT04	★ 907 574-21
74HCT08	★ 907 582-147
74HCT10	★ 907 583-51
74HCT107	★ 907 581-195
74HCT109	★ 907 582-45
74HCT11	★ 907 582-105
74HCT112	★ 907 581-165
74HCT123	★ 907 589-113
74HCT132	★ 907 593-109
74HCT138	★ 907 578-174
74HCT139	★ 907 578-126
74HCT14	★ 907 593-149
74HCT147	★ 907 579-101
74HCT151	★ 907 588-179
74HCT153	★ 907 589-22
74HCT154	★ 907 579-86
74HCT157	★ 907 588-97
74HCT158	★ 907 588-115
74HCT160	★ 907 588-116
74HCT161	★ 907 574-105
74HCT162	★ 907 576-80
74HCT163	★ 907 574-69
74HCT164	★ 907 591-110
74HCT165	★ 907 591-84
74HCT166	★ 907 591-85
74HCT173	★ 907 580-114
74HCT174	★ 907 580-179
74HCT175	★ 907 580-147
74HCT190	★ 907 576-183
74HCT191	★ 907 574-160
74HCT192	★ 907 576-167
74HCT193	★ 907 574-161
74HCT194	★ 907 590-114
74HCT195	★ 907 590-143
74HCT20	★ 907 583-2
74HCT221	★ 907 589-156
74HCT238	★ 907 578-175
74HCT240	★ 907 594-30
74HCT241	★ 907 594-66
74HCT242	★ 907 593-72
74HCT243	★ 907 593-73
74HCT244	★ 907 593-183
74HCT245	★ 907 594-153
74HCT251	★ 907 589-23
74HCT253	★ 907 588-49
74HCT257	★ 907 588-140
74HCT259	★ 907 587-72
74HCT27	★ 907 585-17
74HCT273	★ 907 581-10
74HCT280	★ 907 572-5
74HCT297	★ 907 592-76
	★ 907 3214-46
74HCT299	★ 907 591-158
74HCT32	★ 907 584-106
74HCT354	★ 907 589-52
74HCT356	★ 907 589-53
74HCT365	★ 907 573-74
74HCT366	★ 908 573-21
74HCT367	★ 908 573-75
74HCT368	★ 908 573-22
74HCT373	★ 908 586-169
74HCT374	★ 908 581-115
74HCT377	★ 908 581-26
74HCT384	★ 908 571-150
74HCT390	★ 908 577-59
74HCT393	★ 908 575-38
74HCT4002	★ 908 584-169
74HCT40103	★ 908 575-83
74HCT40104	590-124
74HCT40105	★ 908 587-92
74HCT4015	★ 908 590-69
74HCT4016	★ 908 576-40
74HCT4017	★ 908 575-149
74HCT4020	★ 908 575-69
74HCT4024	★ 908 575-113
74HCT4040	★ 908 592-105
74HCT4046	★ 908 3214-47
74HCT4049	★ 908 572-108
74HCT4050	★ 908 572-153
74HCT4051	★ 908 595-20
74HCT4052	★ 908 593-40
74HCT4053	★ 908 593-45
74HCT4060	★ 908 575-176
74HCT4066	★ 908 594-30
74HCT4067	★ 908 584-68
74HCT4075	★ 908 591-61
74HCT4094	★ 908 578-55
74HCT42	★ 907 589-157
74HCT423	★ 908 580-17
74HCT4511	★ 908 579-54
74HCT4514	★ 908 579-55
74HCT4515	★ 908 577-38
74HCT4518	★ 908 575-16
74HCT4520	★ 908 589-158
74HCT4538	★ 908 579-142
74HCT4543	★ 908 587-19
74HCT533	★ 908 581-52
74HCT534	★ 908 573-129
74HCT540	★ 908 573-130
74HCT541	★ 908 587-20
74HCT563	★ 908 581-53
74HCT564	★ 908 586-170
74HCT573	★ 908 581-116
74HCT574	★ 908 594-126
74HCT640	★ 908 594-127
74HCT643	★ 908 594-99
74HCT646	★ 908 594-85
74HCT648	★ 908 587-113
74HCT670	★ 908 571-70
74HCT688	★ 907 581-196
74HCT73	★ 907 580-73
74HCT74	★ 907 586-72
74HCT75	★ 907 571-129
74HCT85	★ 907 585-151
74HCT86	★ 907 573-172
74HCU04	622-5
74LS00	621-135
74LS01	624-102
74LS02	607-93
74LS04	606-154
74LS05	619-131
74LS08	619-72
74LS09	620-166
74LS10	617-147
74LS107	617-76
74LS109A	619-30
74LS11	618-68
74LS112	618-25
74LS113	606-11
74LS125A	605-158
74LS126A	637-155
74LS13	638-41
74LS132	624-146
74LS136	613-69
74LS138	612-149
74LS139	638-77
74LS14	629-180
74LS151	628-64
74LS153	613-128
74LS154	613-32
74LS155	613-1
74LS156	629-43
74LS157	628-151
74LS158	610-64
74LS160A	608-32
74LS161A	610-112
74LS162A	608-77
74LS163A	632-53
74LS164	3790-100
	611-20
74LS168A	609-18
74LS169A	627-24
74LS170	3770-37
	615-142
74LS173	615-182
74LS174	615-69
74LS175	604-55
74LS181	609-67
74LS191	611-68
74LS192	609-114
74LS193	631-178
74LS194A	631-70
74LS195A	3789-7
	607-159
74LS197	620-83
74LS20	618-145
74LS21	633-178
74LS240	2670-4
	634-57
74LS241	2669-36
	633-114
74LS242	2675-60
	633-115
74LS243	2675-61
	634-100
74LS244	2669-37
	635-125
74LS245	2678-23
	630-59
74LS251A	628-15
74LS253	625-60
74LS256	628-185
74LS257A	628-113
74LS258A	626-37
74LS259	621-30
74LS26	623-162
74LS260	624-18
74LS27	616-82
74LS273	605-113
74LS283	609-163
74LS290	608-143
74LS293	631-38
74LS295B	629-102
74LS298	622-53
74LS30	3772-20
74LS301	623-117
74LS32	624-37
74LS33	627-160
74LS352	627-126
74LS353	626-81
74LS363	616-33
74LS364	606-76
74LS365A	607-29
74LS366A	606-77
74LS367A	607-30
74LS368A	621-66
74LS37	626-82
74LS373	616-136
74LS374	625-109
74LS375	616-163
74LS377	616-19
74LS378	621-13
74LS38	610-147
74LS390	608-96
74LS393	631-138
74LS395A	619-183
74LS40	612-104
74LS42	612-36
74LS445	610-148
74LS490	622-146
74LS51	623-50
74LS54	2670-5
74LS540	634-58
74LS541	2669-38
	610-184
74LS568	609-78
74LS569	636-86
74LS620	636-87
74LS623	635-27
74LS640	2677-54
	635-28
74LS640-1	2677-55
	635-64
74LS641	2677-10
	635-65
74LS641-1	2677-11
	634-153
74LS642	2677-12
	634-154
74LS642-1	2677-13
	635-126
74LS645	2677-56
	627-38
74LS670	3770-52
	603-138
74LS684	617-148
74LS73	615-24
74LS74A	625-110
74LS75	617-180
74LS76	★ 895 2680-120
74LS764	★ 895 1354-88
	605-114
74LS83A	603-66
74LS85	625-8
74LS86	609-164
74LS90	611-134
74LS92	608-144
74LS93	631-108
74LS95B	3788-85
	632-13
74LS96	3789-91
	622-14
74S00	624-113
74S02	621-146
74S03	607-102
74S04	606-163
74S05	619-139
74S08	620-175
74S10	619-39
74S11	618-77
74S112	618-34
74S113	622-86
74S133	622-68
74S134	624-126
74S135	613-77
74S138	612-158
74S139	613-139
74S140	2670-46
	629-191
74S151	628-72
74S153	629-52
74S157	628-160
74S158	611-21
74S168A	609-25
74S169A	627-43
74S172	3770-61
	615-191
74S174	615-78
74S175	604-68
74S181	604-104
74S182	3770-111
74S189	3789-23
74S194	631-78
74S195	3789-24
	620-92
74S20	634-7
74S240	634-66
74S241	633-116
74S242	633-117
74S243	634-106
74S244	630-67
74S251	628-23
74S253	628-193
74S257	628-122
74S258	623-168
74S260	616-88
74S273	639-104
74S280	623-125
74S32	638-143
74S350	

¶ Indicates page number in Application Note Directory.
★ Indicates additional data is provided on the page noted.

IC MASTER

Device	Page-Line
Signetics (Cont'd)	
74S37	621-70
74S373	626-95
74S374	616-146
74S38	621-17
74S40	619-192
74S51	622-155
74S534	616-62
74S64	623-65
74S74	615-32
74S85	603-75
74S86	625-18
8021	1279-34
8035	1279-35
8039	1279-36
8040	1279-37
8048	1279-38
8049	1279-39
8050	1279-40
82S123A	★ **4164**
82S126A	★ **4166**
8881	2664-7
8885	2663-73
8891	2663-41
8A1200	★ **4834**
	4463-34
	4466-44
	¶ 254-14
8A1260	★ **527**
	★ **4844**
	4463-35
	4466-45
	¶ 254-14
8A1542	★ **527**
	★ **4848**
	4463-36
	4466-46
	¶ 254-14
8A1664	★ **527**
	★ **4852**
	4463-37
	4466-47
8A1864	★ **527**
	★ **4853**
	4463-38
	4466-48
8A2176	★ **527**
	★ **4854**
	4463-39
	4466-49
8X01A	2665-6
8X08	3214-137
8X300	1279-41
	¶ 275-8
8X300KT100SK	1961-24
8X305	1279-42
	¶ 276-15
ACE1320M	★ **4860**
	4460-8
ACE1400	★ **4860**
	4460-9
ACE2200	★ **4860**
	4460-10
ACE600	★ **4858**
	4460-6
ACE900	★ **4858**
	4460-7
AM26LS29	2668-46
AM26LS30	2668-59
	2671-18
AM26LS31	2671-41
AM6012	★ **3605**
	2655-36
CA3081	3158-97
CA3089	3168-87
CA3089D2	3168-88
CA3189	3168-89
CCL	★ **4855**
CG1001	★ **4838**
CMOS	★ **896**
	★ **897**
DAC-08	2640-26
DAC-08A	2639-24
DAC-08C	2642-32
DAC-08E	2640-42
DAC-08H	2639-25
DAC08	★ **3606**
DS8880	2663-80
EPL-1	★ **4855**
	4478-16
EPL-2	★ **4855**
	4478-17
FAST	★ **891-894**
FLEXX Array	★ **4832**
HEF4000B	★ **864**
	★ **898**
	584-132
HEF4000BD	★ **864**
	584-133
HEF4001B	★ **864**
	★ **898**
	585-67
HEF4001BD	★ **864**
	585-68
HEF4001UB	★ **864**
	★ **864**
	★ **898**
	585-69
HEF4002B	★ **864**
	★ **898**
	584-170
HEF4002BD	★ **864**
	584-171
HEF4006B	★ **864**
	★ **898**
	591-175
HEF4006BD	★ **864**
	591-176
HEF4007UB	★ **864**
	★ **898**
	573-158
HEF4007UBD	573-159
HEF4008B	★ **864**
	★ **898**
	571-51
HEF40097B	★ **865**
	★ **899**
	573-76
HEF40097BD	★ **865**
	573-77
HEF40098B	★ **865**
	★ **899**
	573-180
HEF40098BD	★ **865**
	573-181
HEF40106	★ **865**
	593-150
HEF40106B	★ **865**
	★ **899**
	593-151
HEF40106BD	★ **865**
	593-152
HEF4011B	★ **864**
	★ **898**
	583-108
HEF4011UB	★ **864**
	★ **864**
	★ **898**
	580-74
HEF4013BD	★ **864**
	580-75
HEF4014B	★ **864**
	★ **898**
	591-140
HEF4014BD	★ **864**
	591-141
HEF4015B	★ **864**
	★ **898**
	590-70
HEF4015BD	★ **864**
	590-71
HEF4016	★ **864**
	2617-73
HEF40160B	★ **865**
	★ **899**
	576-120
HEF40160BD	★ **865**
	576-121
HEF40161B	★ **865**
	★ **899**
	574-106
HEF40161BD	★ **865**
	574-107
HEF40162B	★ **865**
	★ **899**
	576-81
HEF40162BD	★ **865**
	576-82
HEF40163B	★ **865**
	★ **899**
	574-70
HEF40163BD	★ **865**
	574-71
HEF40168	★ **898**
HEF40174B	★ **865**
	★ **899**
	580-180
HEF40174BD	★ **865**
	580-181
HEF40175B	★ **865**
	★ **899**
	580-148
HEF40175BD	★ **865**
	580-149
HEF4017B	★ **864**
	★ **898**
	576-41
HEF4017BD	★ **864**
	576-42
HEF4018B	★ **864**
	★ **898**
	577-152
HEF4018BD	★ **864**
	577-153
HEF40192B	★ **865**
	★ **899**
	576-168
HEF40192BD	★ **865**
	576-169
HEF40193B	★ **865**
	★ **899**
	574-162
HEF40193BD	★ **865**
	574-163
HEF40194B	★ **865**
	★ **899**
	591-1
HEF40194BD	★ **865**
	591-2
HEF40195B	★ **865**
	★ **899**
	590-144
HEF40195BD	★ **865**
	590-145
HEF40198	★ **864**
	★ **898**
	583-183
HEF4020B	★ **864**
	★ **898**
	575-150
HEF4020BD	★ **864**
	575-151
HEF4021B	★ **864**
	★ **898**
	591-25
HEF4021BD	★ **864**
	591-26
HEF4022B	★ **864**
	★ **898**
	577-123
HEF4022BD	★ **864**
	577-124
HEF4023B	★ **864**
	★ **898**
	583-52
HEF4023BD	★ **864**
	583-53
HEF40240B	★ **865**
	★ **899**
	594-31
HEF40244B	★ **865**
	★ **899**
	593-184
HEF40245B	★ **865**
	★ **899**
	594-154
HEF4024B	★ **864**
	★ **898**
	575-70
HEF4024BD	★ **864**
	575-71
HEF4025B	★ **864**
	★ **898**
	585-18
HEF4025BD	★ **864**
	585-19
HEF4027B	★ **864**
	★ **898**
	582-46
HEF4027BD	★ **864**
	582-47
HEF4028B	★ **864**
	★ **898**
	578-56
HEF4028BD	★ **864**
	578-57
HEF4029B	★ **864**
	★ **898**
	578-7
HEF4029BD	★ **864**
	578-8
HEF4030B	★ **864**
	★ **898**
	585-152
HEF4030BD	★ **864**
	585-153
HEF4031B	★ **864**
	★ **898**
	592-12
HEF4031BD	★ **864**
	592-13
HEF4035B	★ **864**
	★ **898**
	591-3
HEF4035BD	★ **864**
	591-4
HEF40373B	★ **865**
	★ **899**
	586-171
HEF40374B	★ **865**
	★ **899**
	581-117
HEF4040B	★ **864**
	★ **898**
	575-114
HEF4040BD	★ **864**
	575-115
HEF4041B	★ **864**
	★ **898**
	572-38
HEF4041BD	★ **864**
	572-39
HEF4042B	★ **864**
	★ **898**
	586-73
HEF4042BD	★ **864**
	586-74
HEF4043B	★ **864**
	★ **898**
	586-117
HEF4043BD	★ **864**
	586-118
HEF4044B	★ **864**
	★ **898**
	586-97
HEF4044BD	★ **864**
	586-98
HEF4046B	★ **864**
	★ **898**
	592-106
HEF4046BD	★ **864**
	592-107
HEF4047B	★ **864**
	★ **898**
	589-85
HEF4047BD	★ **864**
	589-86
HEF4049B	★ **864**
	★ **898**
	572-109
HEF4049BD	★ **864**
	572-110
HEF4050B	★ **864**
	★ **898**
	572-154
HEF4050BD	★ **864**
	572-155
HEF4051B	★ **864**
	★ **898**
	2623-47
HEF4051BD	★ **864**
	2623-48
HEF4052B	★ **864**
	★ **898**
	2623-49
HEF4052BD	★ **864**
	2623-50
HEF4053B	★ **864**
	★ **898**
	2619-72
HEF4053BD	★ **864**
	2619-73
HEF4059B	★ **864**
	★ **898**
	577-94
HEF4059BD	★ **864**
	577-95
HEF4060B	★ **864**
	★ **898**
	575-177
HEF4060BD	★ **864**
	575-178
HEF4066B	★ **864**
	★ **898**
	2617-42
HEF4066BD	★ **864**
	2617-43
HEF4067B	★ **864**
	★ **898**
	2624-54
HEF4067BD	★ **864**
	2624-55
HEF4068B	★ **864**
	★ **898**
	583-147
HEF4068BD	★ **864**
	583-148
HEF4069B	574-22
HEF4069BD	574-23
HEF4069UB	★ **864**
	★ **898**
	574-24
HEF4070B	★ **864**
	★ **898**
	585-154
HEF4070BD	★ **864**
	585-155
HEF4071B	★ **864**
	★ **898**
	584-107
HEF4071BD	★ **864**
	584-108
HEF4072B	★ **864**
	★ **898**
	584-41
HEF4072BD	★ **864**
	584-42
HEF4073B	★ **864**
	★ **898**
	582-106
HEF4073BD	★ **864**
	582-107
HEF4075B	★ **864**
	★ **898**
	584-69
HEF4075BD	★ **864**
	584-70
HEF4076B	★ **864**
	★ **898**
	580-115
HEF4076BD	★ **864**
	580-116
HEF4077B	★ **864**
	★ **898**
	585-183
HEF4077BD	★ **864**
	585-184
HEF4078B	★ **864**
	★ **898**
	585-101
HEF4078BD	★ **864**
	585-102
HEF4081B	★ **864**
	★ **898**
	582-148
HEF4081BD	★ **864**
	582-149
HEF4082B	★ **864**
	★ **898**
	582-75
HEF4082BD	★ **864**
	582-76
HEF4085B	★ **864**
	★ **898**
	584-6
HEF4085BD	★ **864**
	584-7
HEF4086B	★ **864**
	★ **898**
	584-24
HEF4086BD	★ **864**
	584-25
HEF4093B	★ **864**
	★ **898**
	593-110
HEF4093BD	★ **864**
	593-111
HEF4094B	★ **864**
	★ **898**
	591-62
HEF4094BD	★ **864**
	591-63
HEF409BD	583-184
HEF4104B	★ **864**
	★ **898**
	592-32
HEF4502B	★ **864**
	★ **898**
	572-66
HEF4502BD	★ **864**
	572-67
HEF4505	★ **864**
	587-140
	★ **864**
	3771-81
HEF4505B	★ **864**
	★ **898**
	587-141
HEF4508B	★ **864**
	★ **898**
	586-33
HEF4508BD	★ **864**
	586-34
HEF4510B	★ **864**
	★ **898**
	576-170
HEF4510BD	★ **864**
	576-171
HEF4511B	★ **864**
	★ **898**
	580-18
HEF4511BD	★ **864**
	580-19
HEF4512B	★ **864**
	★ **898**
	589-5
HEF4512BD	★ **864**
	589-6
HEF4514B	★ **864**
	★ **898**
	579-56
HEF4514BD	★ **864**
	579-57
HEF4515B	★ **864**
	★ **898**
	579-58
HEF4515BD	★ **864**
	579-59
HEF4516B	★ **864**
	★ **898**
	574-164
HEF4516BD	★ **864**
	574-165
HEF4517B	★ **864**
	★ **898**
	590-85
HEF4517BD	★ **864**
	590-86
HEF4518B	★ **864**
	★ **898**
	577-39
HEF4518BD	★ **864**
	577-40
HEF4519B	★ **864**
	★ **898**
	588-160
HEF4519BD	★ **864**
	588-161
HEF4520B	★ **864**
	★ **898**
	575-17
HEF4520BD	★ **864**
	575-18
HEF4521B	★ **864**
	★ **898**
	590-43
HEF4521BD	★ **864**
	590-44

Arranged alphanumerically from left to right.

© IC MASTER 1984

ABBREVIATIONS OF COMPANY NAMES

Action Ins	Action Instruments
AD	Analog Devices
ADT	Advanced Digital Technology
Advent	Advent Products, Inc.
Alphatron	Alphatron
AMA	American Automation
AMD	Advanced Micro Devices
AMI	American Microsystems, Inc.
Amperex	Amperex Electronic Corp.
Analogic	Analogic
Analog Sys	Analog Systems
APC	Applied Micro Circuits
Apex	Apex Microtechnology
APM	Applied Microsystems Corp.
Appl Sys	Applied Systems Corp.
APT	Applied Microtechnology
Aptek	Aptek Microsystems
Array Tech	Array Technology
AWI	AWI Electronics
Barvon	Barvon Research
Bedford	Bedford Computer Systems Inc.
Burr-Brown	Burr-Brown
CAE	Computer Aided Engineering
Cal Devices	California Devices
Cermetek	Cermetek
CGRS	CGRS Microtech Inc.
Cherry	Cherry Semiconductor
CIC	Custom Integrated Circuits
CirTech	Circuit Technology
Citel	Citel
Comlinear	Comlinear Corporation
CMA	Custom MOS Arrays
Comark	Comark Corp.
Comdial	Comdial Semiconductor
Comp Auto	Computer Automation
Compas	Compas Microsystems
Cont Logic	Control Logic Inc.
Control Sys	Control Systems Microsystems Div.
CreMicro	Creative Micro Systems
Cromemco	Cromemco, Inc.
Cubit	Cubit Inc.
Curtis	Curtis Electro Devices, Inc.
Cybernetic	Cybernetic Micro Systems
Cybersys	Cybersystems
Cybertek	Cybertek Inc.
Data General	Data General
Data I/O	Data I/O
Data Trans	Data Translation
Datel	Datel
Datricon	Datricon Corporation
DDC	Data Devices Corporation
DEC	Digital Equipment Corporation
Die-Tech	Die-Tech
Digelec	Digelec Corp.
Digitek	Digitek, Inc.
Dionics	Dionics Inc.
Dist Comp	Distributed Computer Systems
Divers Tech	Diversified Technology
E-HI	E-H International, Inc.
EDI	Electronic Designs Inc.
Elind	Elind Elettronica Industriale
EMM-SESCO	EEM-SESCO
Emulogic	Emulogic Inc.
ETI Micro	ETI Micro
Exar	Exar Integrated Systems
Exel	Exel Microelectronics
Fairchild	Fairchild
Ferranti	Ferranti Electric
Force	Force Computers
Fujitsu A	Fujitsu America
Fujitsu	Fujitsu Microelectronics, Inc.
GI	General Instrument
GTE Micro	GTE Microcircuits
Harris	Harris Semiconductor
Heurikon	Heurikon Corp.
Hilevel	Hilevel Technology, Inc.
Hitachi	Hitachi America, Ltd.
Holt	Holt Inc.
HP	Hewlett-Packard
Hughes	Hughes Aircraft, Solid State Products
Hybrid Sys	Hybrid Systems
HyComp	HyComp
ICC	International Cybernetics
IDT	Integrated Device Technology
IMI	International Microcircuits, Inc.
IMP	International Microelectronic Products
IMS	Industrial MicroSystems Inc.
Infosphere	Infosphere
Inmos	Inmos
IntCirEng	Integrated Circuit Engineering
IntCirSys	Integrated Circuit Systems
IntCompSys	Integrated Computer Systems
Int Tech	Integrated Technology Corp.
Intech	Intech Microcircuits Div.
Intel	Intel
Interdesign	Interdesign
Intersil	Intersil
Intronics	Intronics
ITT	ITT Semiconductors
Kinetic Sys	Kinetic Systems
Kontron	Kontron Electronics
Lambda	Lambda Semiconductor
Linear Tech	Linear Technology
LSI Comp	LSI Computer Systems
LSI Logic	LSI Logic Corporation
Master Logic	Master Logic Corporation
Matrix	Matrix Corp.
Matrox	Matrox Electronic Systems
Maxim	Maxim Integrated Products
MCC	Micro-Computer Control
MCE	MCE Electronics
Micrel	Micrel
Micro Innov	Micro Innovators
Micropac	Micropac Industries
Micro Net	Micro Networks
Micro Pwr	Micro Power Systems
Micro Sci	Micro Sciences Corp.
Micro Tech	Microcircuits Technology
Micro-Link	Micro-Link Corporation
Micron	Micron Technology
MilerTron	MilerTronics
Miller	Miller Technology
Mitel	Mitel Semiconductor
Mitsubishi	Mitsubishi Electronics
MMI	Monolithic Memories, Inc.
Mostek	Monolithic Systems Corp.
Motorola	Mostek
MRC	Motorola Semiconductor
Murray	MRC Systems
Monosil	Murray Consulting
National	National Semiconductor
NCM	NCM Corp.
NCR	NCR Corp., Microelectronics Division
NEC	NEC Electronics
Nitron	Nitron
OAE	Oliver Advanced Engineering
Octagon	Octagon Systems Corp.
OEI	Optical Electronics Inc.
Ohio Sci	Ohio Scientic
OKI	OKI Semiconductor
Omnibyte	Omnibyte Corp.
Onset	Onset Computer Corp.
Panasonic	Panasonic
Pico Design	Pico Design
Polycore	Polycore Electronics
Plessey	Plessey Semiconductors
PMI	Precision Monilithics, Inc.
PragDes	Pragmatic Design Inc.
Pro-Log	Pro-Log Corp.
Quay	Quay Corp.
Raytheon	Raytheon Semiconductor
RCA	RCA Solid State Division
RCI Data	RCI Data
RELMS	Relational Memory Systems
Reticon	Reticon
RIFA	RIFA
Rockwell	Rockwell, Microelectronic Devices
RTC	Riehl Time Corporation
Sanyo	Sanyo
SBE	SBE, Inc.
SEEQ	SEEQ Technology, Inc.
SPI	Semi Processes Inc.
Siemens	Siemens
Si-Fab	Si-Fab
Signetics	Signetics
SGS	SGS Semiconductor
Sharp	Sharp
Silicon G	Silicon General
Siliconix	Siliconix
Silicon Sys	Silicon Systems Inc.
Siltronics	Siltronics
SMC	Standard Microsystems Corp.
S MOS	S MOS Systems
Solarise	Solarise Enterprises
Solitron	Solitron Devices
Sprague	Sprague Electric Company
SSM	Solid State Micro Technology for Music
SSS	Solid State Scientific
Stag	Stag Microsystems
STC	Storage Technology Corp.
STD	STD Microsystems
Struc Des	Structured Design Inc.
Stynetic	Stynetic Systems
Sunrise	Sunrise Electronics
Sunshine	Sunshine Semiconductor
Supertex	Supertex Inc.
Symtek	Symtek Corp.
Synertek	Synertek
Sys Innov	Systems Innovations
Tau Zero	Tau Zero Inc.
Technitrol	Technitrol
Tektronix	Tektronix
Teledyne C	Teledyne Crystalonics
Teledyne P	Teledyne Philbrick
Teledyne S	Teledyne Semiconductor
Telefunken	Telefunken
Telmos	Telmos
Teltone	Teltone Corporation
TI	Texas Instruments
Third Domain	Third Domain
Thomson-CSF	Thomson-CSF Components Corp.
Toshiba	Toshiba America
Trans-Data	Trans-Data
TRW	TRW LSI Products
Unitrode	Unitrode
Universal	Universal Semiconductor, Inc.
Varix	Varix Corp.
VLSI Design	VLSI Design Associates
VTI	VLSI Technology, Inc.
Votrax	Votrax
Weitek	Weitek Corporation
Western	Western Digital
Wintek	Wintek Corp.
Xicor	Xicor, Inc.
Xycom	Xycom
Zendex	Zendex Corp.
Zilog	Zilog
ZyMOS	ZyMOS Corporation
Zytrex	Zytrex Corp.

IC MASTER BELONGS ON YOUR BOOKSHELF

If you use IC MASTER frequently, you can obtain your own copy by ordering now. Use the order cards contained in this publication, or order by telephone as described below.

IC MASTER is a two-volume set of technical data carefully organized to direct the engineer to the integrated circuits and related products that are closest to his specific needs. It is the surest way to find the optimum device to answer an engineering design requirement. By ordering now, you won't have to borrow or search for IC MASTER the next time you need it.

Typical Use of IC MASTER

Can an engineer find out who makes a 64K dynamic RAM with an access time of 120 nanoseconds or faster in less than 30 seconds?
He can if he turns to the Memory section of IC MASTER and looks for the 64K organization (words and bits per word) that he needs.
Because each device is listed in order of access time, he can easily determine the devices that satisfy his speed requirements.

In the United States only:

You can order IC MASTER simply by charging it to your VISA or Master Card credit card. To place your order, call now: (516) 222-2500.
Ask for Extension 314.

ORDER YOUR COPY NOW

Signetics (Cont'd)

HEF4522B ★ 864
★ 898
577-3
HEF4526B ★ 864
★ 898
574-186
HEF4526BD ★ 864
574-187
HEF4527B ★ 864
★ 898
593-23
HEF4527BD ★ 864
593-24
HEF4528B ★ 864
★ 898
589-114
HEF4528BD ★ 864
589-115
HEF4531B ★ 865
★ 898
595-30
HEF4531BD ★ 865
595-31
HEF4532B ★ 865
★ 898
595-12
HEF4532BD ★ 865
595-13
HEF4534B ★ 865
★ 898
577-109
HEF4538B ★ 865
★ 898
589-159
HEF4538BD ★ 865
589-160
HEF4539B ★ 865
★ 898
588-61
HEF4539BD ★ 865
588-62
HEF4541B ★ 865
★ 899
590-2
HEF4541BD ★ 865
590-3
HEF4543B ★ 865
★ 899
579-143
HEF4543BD ★ 865
579-144
HEF4555B ★ 865
★ 899
578-84
HEF4555BD ★ 865
578-85
HEF4556B ★ 865
★ 899
578-99
HEF4556BD ★ 865
578-100
HEF4557B ★ 865
★ 899
592-19
HEF4557BD ★ 865
592-20
HEF4585B ★ 865
★ 899
571-130
HEF4585BD ★ 865
571-131
HEF4720BV ★ 865
★ 899
587-155
HEF4720BVD ★ 865
★ 899
587-156
HEF4724B ★ 865
★ 899
587-73
HEF4724BD ★ 865
587-74
HEF4731BV ★ 865
★ 899
590-93
HEF4731BVD ★ 865
★ 899
590-94

HEF4737 ★ 865
★ 899
577-99
HEF4738 ★ 865
★ 899
1343-19
1355-20
HEF4750 ★ 865
★ 899
3214-130
HEF4751 ★ 865
★ 899
641-110
HEF4752V ★ 865
★ 899
3234-136
HEF4754 ★ 865
★ 899
HEF9754V 2661-30
INTER 4478-19
ISL ★ 4855
4478-18
LF198 3238-66
LF298 3238-67
LF356 3200-53
LF398 3238-68
LH2101A ★ 526
3205-36
LM101 ★ 526
3175-21
3197-5
LM111 3159-46
LM119 3161-23
LM124 3180-63
LM13600 ★ 3636
3207-57
LM13600A ★ 3636
3205-45
LM139A ★ 526
3162-59
LM158 3180-30
3207-13
LM1870 3168-154
LM193 3161-33
LM193A 3160-54
LM211 3159-47
LM219 3161-24
LM224 3180-64
LM239A 3163-23
LM258 3180-31
3207-14
LM2901 3163-34
LM2903 3161-56
LM293 3161-46
LM293A 3161-47
LM311 3160-34
LM319 3162-7
LM324 3180-65
LM339 3163-24
LM358 3180-19
LM393A 3161-48
MB561 3166-99
MB562 3166-100
MC1408-7 2642-24
MC1408-8 2641-26
MC1488 2668-53
MC1489 2672-30
MC1489A 2672-39
MC1496 3232-86
MC1508-8 2641-27
MC1558 3207-46
MC1596 3232-87
MC3302 3163-40
MC3303 3213-1
MC3403 3213-25
MC3410 2644-6
MC3410C 2645-44
MC3503 3211-49
MC3510 2645-31
MEA8000 ★ 3672
3169-95
N25S10 638-148

N3001 ★ 1663
637-52
¶ 271-8
¶ 271-14
★ 1663
1336-45
¶ 271-8
¶ 271-14
★ 1663
1257-1
¶ 271-8
¶ 271-14
N3002 ★ 1665
605-61
¶ 270-11
¶ 271-8
¶ 271-14
★ 1665
1336-43
¶ 270-11
¶ 271-8
¶ 271-14
★ 1665
1257-2
¶ 270-11
¶ 271-8
¶ 271-14
N3101A 3770-104
N4066A 2617-44
N8234 628-86
N8242 ★ 876
625-29
625-44
625-44
N8262 ★ 876
639-77
N8266 ★ 876
628-82
N8271 ★ 876
631-124
★ 876
3788-52
N8273 ★ 876
633-39
★ 876
3791-19
N8274 ★ 876
633-36
N8277 3791-11
N82HS195 3765-95
N82HS321 ★ 4184
N82LS135 ★ 4170
N82LS16 ★ 4160
3772-22
N82LS17 ★ 4160
3772-21
N82LS181 3763-110
N82S09 3771-96
N82S100 ★ 4153
4482-64
N82S101 ★ 4153
4482-62
N82S102 ★ 4155
4482-43
N82S103 ★ 4155
4482-44
N82S104 4483-5
N82S104A 4483-1
N82S105 4483-7
N82S105A ★ 4157
4483-3
N82S115 3762-13
N82S123 3760-46
N82S123A ★ 4164
N82S126 3760-87
N82S126A ★ 4166
N82S129 3760-90
N82S129A ★ 4166
N82S130 3761-35
N82S130A ★ 4168
N82S131 3761-39
N82S137 ★ 4172
3762-119
N82S137B ★ 4172
3762-75
N82S141 3762-14
N82S147A ★ 4174
3761-114
N82S150 4482-49
N82S151 ★ 4144
4482-50
N82S152 4482-73

N82S152A 4482-71
N82S153 ★ 4146
4482-75
N82S153A ★ 4146
★ 4146
4482-72
N82S154 4483-19
N82S155 4483-20
N82S156 4483-15
N82S157 4483-16
N82S158 4483-11
N82S159 ★ 4148
4483-12
N82S16 3772-34
N82S167 ★ 4151
N82S17 3772-31
N82S180 3763-75
N82S181 3763-82
N82S181A ★ 4176
3763-58
N82S181B ★ 4176
3763-41
N82S183 3763-72
N82S185 3764-66
N82S185A ★ 4178
3764-31
N82S185B ★ 4178
3764-24
N82S19 3771-97
N82S191 3765-40
N82S191A ★ 4180
3764-46
N82S195 ★ 4182
N82S21 627-83
3771-59
N82S210 3773-128
N82S212A ★ 4162
3773-126
N82S23 3760-40
N82S23A ★ 4164
N82S25 3770-125
N82S313A ★ 4168
N82S321 3766-19
N82S41 ★ 876
624-151
N82S42 ★ 876
625-48
N82S50 ★ 876
612-30
N82S52 ★ 876
612-107
N82S62 ★ 876
639-105
N82S71 ★ 876
631-128
N82S82 ★ 876
605-121
N82S83 ★ 876
603-16
N8815 ★ 876
623-152
N8881 ★ 876
621-92
N8890 ★ 876
607-51
N8891 ★ 876
607-52
N8T09 ★ 876
613-148
★ 876
2668-30
N8T10 ★ 876
615-130
N8T125 ★ 876
635-29
★ 876
2678-24
N8T126 ★ 876
2676-7
N8T127 ★ 876
638-93
★ 876
2676-8
N8T128 ★ 876
638-106
★ 876
2676-19
N8T129 ★ 876
638-107
★ 876
2676-20

N8T13 ★ 876
2668-9
N8T14 2672-21
N8T15 ★ 876
2668-18
N8T16 ★ 876
2672-10
N8T20 ★ 876
630-94
N8T22 ★ 876
630-114
N8T23 ★ 876
2668-3
N8T24 ★ 876
2672-15
N8T245 ★ 876
635-127
N8T26A ★ 876
638-94
★ 876
2676-9
N8T28 ★ 876
638-108
★ 876
2676-21
N8T31 638-161
1347-65
N8T32 638-163
1347-69
N8T33 638-164
1347-70
N8T34 ★ 876
2676-30
N8T3404 ★ 876
626-12
N8T35 638-165
1347-58
N8T36 638-166
1347-59
N8T37 ★ 876
2672-63
N8T38 ★ 876
2675-3
N8T380 ★ 876
638-9
N8T39 638-167
1347-54
N8T58 1347-92
N8T80 614-5
N8T93 607-103
N8T95 ★ 876
606-84
★ 876
1341-17
N8T96 ★ 876
607-37
★ 876
1341-18
N8T97 ★ 876
606-85
★ 876
1341-19
N8T98 ★ 876
607-38
★ 876
1341-20
N8TLS803 ★ 876
N8TLS810 ★ 876
N8TS805 ★ 876
626-83
N8TS806 ★ 876
616-30
N8TS807 ★ 876
626-132
N8TS808 ★ 876
616-31
N8X01A 636-148
N8X02 1336-77
1355-9
N8X02A ★ 1653
637-53
N8X300 ★ 1608
★ 1652
1347-49
N8X305 ★ 1610
★ 1652
1347-50
N8X31 638-162
1347-66
N8X310 ★ 1615
★ 1652
1347-82

N8X32 638-168
1347-71
N8X320 ★ 1619
★ 1652
637-24
★ 1619
★ 1652
1347-81
N8X330 ★ 1623
★ 1652
1347-57
N8X338 ★ 1652
N8X350 ★ 1627
★ 1652
3773-124
★ 1627
★ 1652
1347-90
N8X353 ★ 1629
1347-88
N8X355 ★ 1630
1347-84
N8X36 638-169
1347-60
N8X360 ★ 1631
★ 1652
1347-86
N8X371 ★ 1632
★ 1652
1347-67
N8X372 ★ 1635
★ 1652
1347-72
N8X374 ★ 1638
★ 1652
1347-79
N8X376 ★ 1635
★ 1652
1347-61
N8X382 ★ 1642
★ 1652
1347-73
N8X41 ★ 1645
636-137
★ 1645
1352-88
1354-115
N8X42 1347-74
N8X60 ★ 1647
637-9
★ 1647
2680-68
★ 1647
1347-55
N9300 631-55
N9301 ★ 876
612-28
N9309 ★ 876
627-135
N9310 ★ 876
610-35
N9312 ★ 876
629-135
N9316 ★ 876
608-3
N9322 ★ 876
629-14
N9324 ★ 876
603-67
N9334 ★ 876
626-19
N9386 ★ 876
625-30
N9401 ★ 1656
636-149
★ 1656
2665-9
★ 1656
1336-9
N9403 ★ 1660
3757-5
★ 1660
1336-4
N9601 ★ 876
630-115
N9602 ★ 876
631-11
NE4558 3208-53
NE5018 2641-45
1354-106
NE5019 ★ 3607
2639-50

¶ Indicates page number in Application Note Directory.
★ Indicates additional data is provided on the page noted.

IC MASTER

Signetics (Cont'd)

Device	Page-Line
NE5020	★ 3608
	2644-49
NE5034	★ 3609
	2627-1
NE5036	2625-18
NE5037	★ 3610
	2625-19
NE5044	★ 3626
	3218-46
NE5045	★ 3629
	3218-47
NE5090	★ 3624
	2680-13
NE5118	2640-17
NE5119	★ 3611
	2639-40
NE521	★ 3620
	3161-59
NE522	3161-61
NE527	★ 3621
	3160-17
NE529	★ 3622
	3160-18
NE530	3196-25
NE531	3199-18
NE532	3180-32
	3208-24
NE538	3196-29
NE5410	★ 3612
	2645-32
NE542	3165-172
NE544	★ 3632
	3173-86
NE5512	★ 3638
	3175-8
	3206-54
NE5514	★ 3640
	3175-9
NE5517	★ 3642
	3206-55
NE5517A	★ 3642
	3206-56
NE5520	★ 3635
	3234-135
	3235-9
NE5532	★ 3644
	3206-33
NE5532A	★ 3644
	★ 3644
	3206-34
NE5533	★ 3646
	3206-35
NE5533A	★ 3646
	3206-36
NE5534	3194-4
NE5534A	★ 3646
	3194-5
NE5535	3208-21
NE5537	★ 3669
	3238-69
NE5539	★ 3678
	3180-143
	3197-39
NE555	3220-45
NE556	3220-81
NE556-1	3220-82
NE5560	★ 3652
	3230-98
NE5561	3230-99
NE558	★ 3670
	3220-95
NE5592	★ 3683
NE561	★ 3657
NE564	★ 3649
	3214-30
NE565	3215-5
NE566	3215-16
NE567	3214-150
	3218-127
NE570	★ 3616
	3216-129
NE571	★ 3616
	3216-130
NE572	★ 3618
	3216-131
NE587	2662-72
NE589	2662-56
NE590	★ 3625
	2679-1
	★ 3625
	1354-95
NE591	★ 3625
	2679-2
	★ 3625
	1354-96
NE592	★ 3675
	3156-112
NE594	★ 3623
	2663-104
NE645	3164-57
NE646	3164-58
NE648	3164-59
NE649	3164-60
NE650	3164-61
NE651	3164-62
NE652	3164-63
NE653	3164-64
NE654	3164-65
NE657	3164-67
NE660	3164-66
PCA1122	3167-36
PCB8573	1351-109
	1355-7
PCD3311	3219-90
PCD3312	3219-91
PCD3320	3217-19
PCD3321	3217-20
PCD3322	3217-21
PCD3323	3217-22
PCD3324	3217-4
PCD3325	3217-5
PCD3340	3216-163
PCD8571	3771-112
PCE2100	2664-23
PCE2110	2664-24
PCE2112	2664-14
PCF1171	3166-4
	3166-117
PCF1172	3166-5
	3166-118
PCF2111	2664-25
PCF8576	2661-54
PCF8577	2661-55
S1534	640-86
S3001	★ 1663
	637-54
	★ 1663
	1336-46
S3002	★ 1665
	605-62
	★ 1665
	1336-44
S3101A	3770-126
S8202	633-29
S8233	629-15
S8234	628-87
S8241	624-131
S8242	625-45
S8250	612-29
S8262	639-78
S8266	628-83
S8270	616-189
	3788-53
S8271	631-125
	3788-54
S8273	633-40
	3791-20
S8274	3791-16
S8280	609-190
S8281	607-143
S8284	609-119
S82HS195	3765-109
S82HS321	★ 4184
S82LS135	★ 4170
S82LS16	★ 4160
	3772-42
S82LS17	★ 4160
	3772-41
S82LS181	3763-113
S82S09	★ 532
	3771-102
S82S100	★ 532
	★ 4153
	4482-68
S82S101	★ 532
	★ 4153
	4482-66
S82S102	★ 532
	★ 4155
	4482-45
S82S103	★ 532
	★ 4155
	4482-46
S82S104	★ 532
	4483-6
S82S104A	★ 532
	4483-2
S82S105	★ 532
	4483-8
S82S105A	★ 532
	★ 4157
	4483-4
S82S115	★ 532
	3762-53
S82S123	★ 532
	3760-58
S82S126	★ 532
	3760-115
S82S129	★ 532
	3760-117
S82S129A	★ 4166
S82S130	★ 532
	3761-64
S82S130A	★ 4168
S82S131	★ 532
	3761-70
S82S137	★ 532
	3763-11
S82S137A	★ 532
	3763-4
S82S141	★ 532
	3762-54
S82S147	★ 532
S82S147A	★ 4174
S82S150	★ 532
	4482-47
S82S151	★ 532
	★ 4144
	4482-48
S82S152	4482-78
S82S152A	4482-76
S82S153	★ 532
	★ 4146
	4482-80
S82S153A	★ 532
	★ 4146
	★ 4146
	4482-77
S82S154	★ 532
	4483-17
S82S155	★ 532
	4483-18
S82S156	★ 532
	4483-13
S82S157	★ 532
	4483-14
S82S158	★ 532
	4483-9
S82S159	★ 532
	★ 4148
	4483-10
S82S16	★ 532
	3772-49
S82S167	★ 4151
S82S17	3772-48
S82S180	3763-99
S82S181	★ 532
	3763-102
S82S181A	★ 532
	★ 4176
	3763-96
S82S181B	★ 4176
S82S183	3763-103
S82S185	★ 532
	3764-67
S82S185A	★ 532
	★ 4178
	3764-59
S82S185B	★ 4178
S82S19	★ 532
	3771-101
S82S191	★ 532
	3765-42
S82S191A	★ 532
	★ 4180
	3764-60
S82S195	★ 4182
S82S210	3774-2
S82S212	★ 532
	3774-1
S82S212A	★ 4162
S82S23	★ 532
	3760-56
S82S23A	★ 4164
S82S25	3771-24
S82S2708	★ 532
	3763-104
S82S30	629-138
S82S31	629-139
S82S313A	★ 4168
S82S32	629-140
S82S321	★ 532
S82S37	★ 4172
S8891	★ 876
	607-53
S8T04	2661-148
S8T05	2661-134
S8T09	★ 876
	613-149
	★ 876
	2668-31
S8T10	★ 876
	615-131
S8T125	★ 876
	635-30
	★ 876
	2678-25
S8T126	★ 876
	638-95
	★ 876
	2676-10
S8T127	★ 876
	638-96
	★ 876
	2676-11
S8T128	★ 876
	638-109
	★ 876
	2676-22
S8T129	★ 876
	638-110
	★ 876
	2676-23
S8T13	★ 876
	2668-10
S8T16	★ 876
S8T245	★ 876
	635-128
S8T26A	★ 876
	638-97
S8T28	★ 876
	638-111
S8T32	638-170
	1347-75
S8T33	638-171
	1347-76
S8T35	638-172
	1347-62
S8T36	638-173
	1347-63
S8T39	638-174
S8T80	614-6
S8T90	606-127
S8T95	1341-21
S8T97	★ 876
	606-86
	★ 876
	1341-22
S8T98	★ 876
	607-39
	★ 876
	1341-23
S8TS805	★ 876
	626-84
S8TS806	★ 876
	626-85
S8X300-1	★ 1608
	★ 1652
	1347-51
S8X300-2	★ 1608
	★ 1652
	1347-52
S8X305	★ 527
	★ 1610
	★ 1652
	1347-53
S8X310	★ 527
	★ 1615
	★ 1652
	1347-83
S8X320	★ 1652
S8X330	★ 1652
S8X338	★ 1652
S8X350	★ 527
	★ 532
	★ 1627
	★ 1652
	3773-125
	★ 527
	★ 532
	★ 1627
	★ 1652
	1347-91
S8X353	★ 1629
	1347-89
S8X355	★ 1630
	1347-85
S8X360	★ 527
	★ 1631
	★ 1652
	1347-87
S8X371	★ 527
	★ 1632
	★ 1652
	1347-68
S8X372	★ 527
	★ 1635
	★ 1652
	1347-77
S8X374	★ 527
	★ 1638
	★ 1652
	1347-80
S8X376	★ 527
	★ 1635
	★ 1652
	1347-64
S8X382	★ 527
	★ 1642
	★ 1652
	1347-78
S8X60	★ 527
	★ 1647
	2680-69
	★ 527
	★ 1647
	1347-56
S9309	★ 526
	627-136
S9314	625-129
S9334	626-20
S9386	625-31
S9401	★ 1656
	2665-10
	★ 1656
	1336-10
S9601	630-116
S9602	631-12
SA1034	640-84
SA1458	3209-3
SA1534	640-85
SA532	3209-12
SA534	3180-47
SA556	3220-83
SA556-1	3220-84
SA558	★ 3670
	3220-96
SA571	★ 3616
	3216-132
SA594	★ 3623
	2663-105
SA723C	3229-17
SA741C	3199-7
SA747C	3208-62
SAA1027	3173-70
	3235-17
SAA1043P	3172-37
SAA1057	3168-29
	3214-131
SAA1060	2661-62
SAA1061	2661-63
SAA1062	2661-42
SAA1063	2662-114
SAA1300	3173-99
SAA3004	3168-179
SAA3006	3169-6
SAA3027	3168-180
SAA5000	3169-55
SAA5012	3169-56
SAA5020	3218-106
SAA5025B	3218-103
SAA5025C	3218-104
SAA5025D	3218-105
SAA5030	3218-107
SAA5040B	3218-100
SAA5045	3218-108
SAA5055	3218-102
SAA5070	3219-47
SAA7000	3164-39
SAA7010	3164-40
SAA7020	3164-41
SAA7030	3164-42
SAB1018	641-38
SAB1018A	641-39
SAB1034	★ 858
	599-23
SAB1077	641-30
	3215-87
SAB1164	641-19
	3214-86
SAB1256	641-40
	3214-85
SAB1534	★ 858
	599-24
SAB3013	3171-43
SAB3035	3171-49
	3171-60
SAB3036	3171-50
SAB3037	3171-51
SAF1032	3169-57
SAF1034	★ 858
	599-25
SAF1039	3169-58
SAF1534	★ 858
	599-26
SAF3019	3166-154
SC2670AC3	1340-154
SC2670BC3	1340-155
SCB2673A	★ 1681
	1341-3
	1354-66
SCB2673B	★ 1681
	1341-4
	1354-67
SCB2675	★ 1683
	1339-116
	1352-97
SCB2677A	★ 1684
	1353-7
SCB2677B	★ 1684
	1353-8
SCB68430	★ 1692
	1351-123
SCB68459	★ 1693
	1351-120
SCC0330M	★ 4862
	4469-38
SCC0335H	★ 4866
	4463-22
SCC0450M	★ 4862
	4469-39
SCC0455H	★ 4866
	4463-23
SCC0700M	★ 4862
	4469-40
SCC0705H	★ 4866
	4463-24
SCC1100M	★ 4862
	4469-41
SCC1105H	★ 4866
	4463-25
SCC1250SH	★ 4870
SCC2500SH	★ 4870
SCC5000SH	★ 4870
SCC80C31	★ 1688
	1345-6
SCC80C35	★ 1686
	1344-26
SCC80C39	★ 1686
	1344-27
SCC80C40	★ 1686
	1344-28
SCC80C48	★ 1686
	1344-65
SCC80C49	★ 1686
	1344-66
SCC80C50	★ 1686
	1344-67
SCC80C51	★ 1688
	1345-17
SCN2621A	3172-66
	1354-52
SCN2622A	3172-65
	1354-51

Arranged alphanumerically from left to right.

© IC MASTER 1984

Device	Page-Line
Signetics (Cont'd)	
SCN2636A	3173-14
	1353-1
SCN2637A	3172-67
	3173-15
	1353-6
SCN2650A	1340-152
SCN2651C	★ 1669
	2686-17
	★ 1669
	1340-158
	1346-16
SCN2652A	★ 1670
	2686-8
	2686-14
	★ 1670
	1340-156
	1345-162
	1345-163
	1354-20
SCN2653	★ 1671
	2666-13
SCN2653A	★ 1671
	3218-45
	★ 1671
	1340-157
	1346-7
	1354-27
SCN2661A	★ 1673
	2685-81
	★ 1673
	1340-159
	1346-17
	1354-31
SCN2661B	★ 1673
	2685-82
	★ 1673
	1340-160
	1346-18
	1354-29
SCN2661C	★ 1673
	2685-83
	★ 1673
	1340-161
	1346-19
	1354-30
SCN2670	★ 1677
	3783-112
SCN2670A	★ 1677
	1353-41
SCN2670B	★ 1677
	1353-42
SCN2671A	★ 1678
	2667-14
	★ 1678
	1341-1
	1354-40
SCN2672	★ 1680
	1344-92
SCN2672A	★ 1680
	1341-2
	1353-2
SCN2673A	★ 1681
	1341-5
	1353-9
SCN2673B	★ 1681
	1341-6
	1353-10
SCN2674	★ 1682
	1340-153
	1352-96
SCN2681	★ 1675
	2685-72
	★ 1675
	1341-7
SCN68000	★ 1689
	★ 1690
	1351-103
	★ 1689
	★ 1690
	1287-11
SCN68008	★ 1690
	1351-85
SCN68010	★ 1690
	1351-87
SCN68020	★ 1690
	1352-74
SCN68120C	1352-7
SCN6820	★ 1690
SCN68230C	★ 1691
	1352-21
SCN68440	★ 1691
	1351-125
SCN68451	★ 1691
	1352-10
SCN68454	★ 1691
	1351-119
SCN68562	★ 1693
	1351-117
SCN68652	★ 1670
	2686-15
SCN68653	★ 1671
	2666-12
SCN68661	★ 1673
	2685-80
SCN68681	★ 1694
	2685-73
SCN68681C	★ 1694
	1352-30
SCN8031	★ 1685
	★ 1687
	1345-7
SCN8035A	★ 1685
	1344-29
SCN8039A	★ 1685
	1344-30
SCN8040	★ 1685
	1344-31
SCN8048A	★ 1685
	1344-68
SCN8049A	★ 1685
	1344-69
SCN8050	★ 1685
SCN80503	1344-70
SCN8051	★ 1685
	★ 1687
	1345-18
SE4558	3207-27
SE5018	★ 526
	2641-46
SE5019	★ 3607
	2639-51
SE5090	2680-14
SE5118	2640-18
SE5119	★ 3611
	2639-41
SE521	★ 526
	★ 3620
	3161-60
SE522	3161-62
SE527	★ 3621
	3159-56
SE529	★ 3622
	3159-57
SE530	3191-13
SE531	3196-43
SE532	★ 526
	3180-33
	3207-15
SE538	3191-12
SE5410	★ 3612
	2645-33
SE5512	★ 526
	★ 3638
	3175-10
SE5514	★ 3640
	3175-11
SE5517	★ 3642
SE5532	★ 526
	★ 3644
	3205-43
SE5532A	★ 526
	★ 3644
	★ 3644
	3205-44
SE5534	★ 526
	3191-53
SE5534A	★ 526
	★ 3646
	3191-54
SE5535	3206-19
SE5537	3238-70
SE5539	★ 526
	★ 3678
	3180-144
	3197-40
SE555	★ 526
	3220-46
SE555C	★ 526
	3220-47
SE556	★ 526
	3220-85
SE556-1	★ 526
	3220-86
SE556-1C	★ 526
	3220-87
SE5560	★ 526
	★ 3652
	3230-100
SE5561	3230-101
SE558	★ 3670
	3220-97
SE5592	★ 3683
SE561	★ 3657
SE564	★ 3649
	3214-31
SE565	3215-6
SE566	3215-17
SE567	3214-151
	3218-128
SE590	2679-3
SE592	★ 3675
	3156-113
SG3524	★ 3661
	3230-102
SMDEV10000	★ 1930
	1817-9
SMSFT10000	★ 1930
SMSFT16000	★ 1930
SMSFT1970	★ 2052
SMVME1500	★ 2052
SMVME2000	★ 2052
	1967-6
SMVME3100	★ 2052
SMVME4300	★ 2052
SM3002	★ 1665
ST101	3216-121
ST120	3218-92
	3219-100
TBA120U	3168-90
	3168-123
	3172-10
TBA750C	3168-91
	3172-11
TBA890	3171-145
TCA210	3164-1
TCA220	3210-8
TCA240	3232-88
TCA280A	3239-103
TCA520B	3198-34
TCA730A	3164-31
TCA740A	3164-32
TCA770	3168-92
	3168-124
TDA 1580	3168-21
TDA0820T	3172-42
	3232-89
TDA1001B	3168-108
TDA1013A	3164-117
TDA1015	3164-118
TDA1020	3164-180
TDA1022	3167-56
	3232-54
TDA1023	3239-104
TDA1024	3239-105
TDA1028	3156-69
TDA1029	2621-11
	3156-70
	3173-117
TDA1072	3167-115
TDA1074A	3164-33
	3235-131
TDA1506	3173-62
	3235-10
TDA1508	3169-129
TDA1510	3165-100
TDA1512	3165-63
TDA1515	3165-101
TDA1520	3165-64
TDA1522	3165-173
TDA1524	3164-34
	3172-49
TDA1533	3173-66
TDA1571	3168-32
TDA1574	3168-33
TDA1576	3168-50
TDA1578A	3168-155
TDA2544	3172-155
TDA2546A	3172-12
TDA2577A	3171-75
TDA2578A	3171-76
TDA2593	3171-100
TDA2594	3171-101
TDA2595	3171-77
TDA2653	3172-88
TDA2653A	3172-89
TDA2655A	3172-90
TDA2655B	3172-91
TDA3047	3156-22
	3168-177
TDA3048	3168-178
TDA3083	3157-169
TDA3500	3170-179
TDA3505	3170-180
TDA3510	3170-181
TDA3520	3170-182
TDA3540	3172-156
TDA3541	3156-114
	3172-157
TDA3562	3170-183
TDA3563	3170-184
TDA3564	3172-158
TDA3651	3172-92
TDA3651A	3172-93
TDA3652	3172-94
TDA3810	★ 3613
	3172-13
TDA4500	3171-149
TDA4550	3170-185
TDA4560	3170-186
TDA7000	★ 3663
	3168-118
TDA7010T	★ 3666
	3168-119
TEA1002	3171-129
	3173-13
TEA1010	3173-131
TEA1021	3217-23
TEA1039	3232-108
TEA1042	3219-38
TEA1043	3217-24
TEA1044	3217-25
TEA1046	3219-39
TEA1055	3219-40
TEA1058T	3173-132
TEA5550	3167-116
TEA5560	3168-51
TEA5570	3168-7
TEA5580	3168-156
ULN2001	3158-46
ULN2003	2679-98
	3158-47
ULN2004	2679-79
	3158-48
uA723	3229-18
uA723C	3229-19
uA733	3156-115
uA733C	3156-116
uA741	3175-36
	3196-55
uA741C	3198-52
uA747	3207-47
uA747C	3208-45
uA758	3168-157
uPD8741A	1344-168
Silicon Systems Inc.	
CMOS Library	4478-21
SCA-12	★ 3685
	★ 4872
	4475-26
	★ 3685
	★ 4872
	3238-106
SCA-6	★ 3685
	★ 4872
	4475-25
	★ 3685
	★ 4872
	3238-107
SSI101A	★ 4208
	2681-16
SSI102	2681-14
SSI103	2681-12
SSI104	★ 4208
	2681-15
SSI105	2681-20
SSI106	2680-56
SSI108	★ 4208
	2681-21
SSI114	★ 4208
	2681-13
	2681-22
SSI115	★ 4208
	2681-23
SSI116	★ 4208
	2681-17
SSI117	★ 4208
	2681-25
SSI122	★ 4208
SSI180	★ 3685
	3218-33
SSI183	3238-100
SSI184	3238-101
SSI201	★ 3685
	3219-12
	¶ 299-13
SSI202	★ 3685
	3218-138
	3219-13
SSI203	★ 3685
SSI263	★ 3685
SSI501	★ 4208
SSI5601	★ 3685
SSI570	★ 4208
SSI8500	★ 4208
	2665-3
SSI8502	★ 4208
	2666-7
SSI8520	★ 4208
	2665-16
SSISC-01	★ 3685
Siliconix	
D123A	636-132
	2622-52
D123B	636-133
	2622-53
D125A	★ 3080
	636-134
	★ 3080
	2622-54
D125B	★ 3080
	636-135
	★ 3080
	2622-55
D129A	★ 3080
	2622-44
D129B	★ 3080
	2622-45
D139A	636-111
	2622-40
D139B	636-112
	2622-41
D139C	2622-42
D169	★ 3080
D469	★ 3080
	2622-46
DF320	3217-26
DF320A	3217-27
DF322	3217-28
DF328	3217-29
DF331A	3216-126
DF332A	3216-127
DF412	2662-148
DG123A	2617-97
DG123B	2617-101
DG125A	★ 3078
	2617-99
DG125B	★ 3078
	2617-103
DG126A	★ 3079
	2620-72
DG126B	★ 3079
	2620-84
DG129A	★ 3079
	2620-44
DG129B	★ 3079
	2620-58
DG133A	★ 3077
	2615-123
	¶ 291-15
DG133B	★ 3077
	2616-11
	¶ 291-15
DG134A	★ 3077
	2616-32
DG134B	★ 3077
	2616-46
DG139A	★ 3079
	2620-114
DG139B	★ 3079
	2620-120
DG140A	★ 3079
	2620-23
DG140B	★ 3079
	2620-29
DG141A	★ 3077
	2615-94
DG141B	★ 3077
	2615-105
DG142A	★ 3079
	2621-3
DG142B	★ 3079
	2621-7
DG143A	★ 3078
	2618-69
DG143B	★ 3078
	2618-80
DG144A	★ 3078
	2618-39
DG144B	★ 3078
	2618-55
DG145A	★ 3079
	2620-101
DG145B	★ 3079
	2620-107
DG146A	★ 3078
	2618-18
DG146B	★ 3078
	2618-25
DG151A	★ 3077
	2615-102
DG151B	★ 3077
	2615-108
DG152A	★ 3077
	2616-9
DG152B	★ 3077
	2616-44
DG153A	★ 3079
	2620-27
DG153B	★ 3079
	2620-32
DG154A	★ 3079
	2620-57
DG154B	★ 3079
	2620-83
DG161A	★ 3078
	2618-22
DG161B	★ 3078
	2618-27
DG162A	★ 3078
	2618-52
DG162B	★ 3078
	2618-78
DG163A	★ 3079
	2620-105
DG163B	★ 3079
	2620-110
DG164A	★ 3079
	2620-119
DG164B	★ 3079
	2621-6
DG172A	★ 3077
	2616-59
DG172B	★ 3077
	2616-60
DG172C	★ 3077
	2616-61
DG180A	★ 3077
	2615-88
	2615-97
DG180B	★ 3077
	2615-89
	2615-98
DG181A	★ 3077
	2615-113
	2615-117
	¶ 291-11
	¶ 291-15
DG181B	★ 3077
	2615-128
	2616-4
	¶ 291-11
	¶ 291-15
DG182A	★ 3077
	2616-19
	2616-24
DG182B	★ 3077
	2616-38
	2616-42
DG183A	★ 3079
	2620-14
	2620-18

¶ Indicates page number in Application Note Directory.
★ Indicates additional data is provided on the page noted.

IC MASTER

Siliconix (Cont'd)

Device	Page-Line
DG183B	★ 3079
	2620-15
	2620-19
DG184A	★ 3079
	2620-36
	2620-40
DG184B	★ 3079
	2620-48
	2620-52
DG185A	★ 3079
	2620-63
	2620-67
DG185B	★ 3079
	2620-76
	2620-80
DG186A	★ 3078
	2618-9
	2618-13
DG186B	★ 3078
	2618-10
	2618-14
DG187A	★ 3078
	2618-31
	2618-35
DG187B	★ 3078
	2618-43
	2618-47
DG188A	★ 3078
	2618-59
	2618-63
DG188B	★ 3078
	2618-73
	2618-77
DG189A	★ 3078
	2619-12
	2619-16
DG189B	★ 3078
	2619-13
	2619-17
DG190A	★ 3078
	2619-22
	2619-27
DG190B	★ 3078
	2619-28
	2619-30
DG191A	★ 3078
	2619-35
	2619-39
DG191B	★ 3078
	2619-43
	2619-47
DG200A	★ 3077
	2615-60
	¶ 291-15
DG200AA	★ 3077
	2615-61
	¶ 291-15
DG200AB	★ 3077
	2615-78
	¶ 291-15
DG200AC	★ 3077
	2615-79
	¶ 291-15
DG200B	★ 3077
	2615-80
	¶ 291-15
DG200C	★ 3077
	2615-81
	¶ 291-15
DG201A	★ 3077
	2617-10
DG201AA	★ 3077
	2617-11
DG201AB	★ 3077
	2617-16
DG201AC	★ 3077
	2617-17
DG201AHSA	★ 3077
	2617-18
DG201AHSB	★ 3077
	2617-19
DG201AHSC	★ 3077
	2617-20
DG201B	★ 3077
	2617-21
DG201C	★ 3077
	2617-22
DG202A	★ 3077
	2617-12
DG202B	★ 3077
	2617-13
DG202C	★ 3077
	2617-23
DG211C	★ 3077
	2617-14
DG212C	★ 3077
	2617-15
DG221A	★ 3077
	2616-107
DG221C	★ 3077
	2616-108
DG243A	★ 3078
	2618-115
DG243C	★ 3078
	2618-116
DG281A	★ 3077
	2616-49
DG281B	★ 3077
	2616-50
DG284A	★ 3079
	2620-88
DG284B	★ 3079
	2620-89
DG287A	★ 3078
	2618-85
DG287B	★ 3078
	2618-86
DG290A	★ 3078
	2619-51
DG290B	★ 3078
	2619-52
DG300A	★ 3077
	2615-33
	¶ 291-2
DG300AA	★ 3077
	2615-34
	¶ 291-2
DG300AB	★ 3077
	2615-35
	¶ 291-2
DG300AC	★ 3077
	2615-36
	¶ 291-2
DG300B	★ 3077
	2615-37
	¶ 291-2
DG300C	★ 3077
	2615-38
	¶ 291-2
DG301AA	★ 3078
	2617-114
	¶ 291-2
DG301AB	★ 3078
	2617-115
	¶ 291-2
DG301AC	★ 3078
	2617-116
	¶ 291-2
DG302A	★ 3079
	2619-115
	¶ 291-2
DG302AA	★ 3079
	2619-116
	¶ 291-2
DG302AB	★ 3079
	2619-117
	¶ 291-2
DG302AC	★ 3079
	2619-118
	¶ 291-2
DG302B	★ 3079
	2619-119
	¶ 291-2
DG302C	★ 3079
	2619-120
	¶ 291-2
DG303AA	★ 3078
	2618-104
	¶ 291-2
DG303AB	★ 3078
	2618-105
	¶ 291-2
DG303AC	★ 3078
	2618-106
	¶ 291-2
DG304A	★ 3077
	2615-39
	¶ 291-2
DG304AA	★ 3077
	2615-40
	¶ 291-2
DG304AB	★ 3077
	2615-41
	¶ 291-2
DG304AC	★ 3077
	2615-42
	¶ 291-2
DG304B	★ 3077
	2615-43
	¶ 291-2
DG304C	★ 3077
	2615-44
	¶ 291-2
DG305AA	★ 3078
	2617-117
	¶ 291-2
DG305AB	★ 3078
	2617-118
	¶ 291-2
DG305AC	★ 3078
	2617-119
	¶ 291-2
DG306AA	★ 3079
	2619-121
	¶ 291-2
DG306AB	★ 3079
	2619-122
	¶ 291-2
DG306AC	★ 3079
	2619-123
	¶ 291-2
DG307AA	★ 3078
	2618-107
	¶ 291-2
DG307AB	★ 3078
	2618-108
	¶ 291-2
DG307AC	★ 3078
	2618-109
	¶ 291-2
DG308A	★ 3077
	2617-6
	¶ 291-17
	¶ 292-1
DG308C	★ 3077
	2617-7
	¶ 291-17
	¶ 292-1
DG309A	★ 3077
	2617-8
DG309C	★ 3077
	2617-9
DG381A	★ 3077
	2615-45
DG381AA	★ 3077
	2615-46
DG381AB	★ 3077
	2615-47
DG381AC	★ 3077
	2615-48
DG381B	★ 3077
	2615-49
DG381C	★ 3077
	2615-50
DG384AA	★ 3079
	2619-93
DG384AB	★ 3079
	2619-94
DG384AC	★ 3079
	2619-95
DG384B	★ 3079
	2620-1
DG384C	★ 3079
	2620-2
DG387AA	★ 3078
	2617-120
DG387AB	★ 3078
	2617-121
DG387AC	★ 3078
	2617-122
DG390AA	★ 3078
	2618-110
DG390AB	★ 3078
	2618-111
DG390AC	★ 3078
	2618-112
DG501A	★ 3082
	2623-98
	2623-104
DG501B	★ 3082
	2623-99
	2623-105
DG501C	★ 3082
	2623-100
	2623-106
DG503A	★ 3082
	2623-102
DG503B	★ 3082
	2623-103
DG5040A	★ 3077
	2615-2
DG5040C	★ 3077
	2615-3
DG5041A	★ 3077
	2615-53
DG5041C	★ 3077
	2615-54
DG5042A	★ 3078
	2617-125
DG5042C	★ 3078
	2617-126
DG5043A	★ 3078
	2618-117
DG5043C	★ 3078
	2618-118
DG5044A	★ 3079
	2619-99
DG5044C	★ 3079
	2619-100
DG5045A	★ 3079
	2620-5
DG5045C	★ 3079
	2620-6
DG506A	★ 3082
	2624-62
	¶ 291-11
DG506AA	★ 3082
	2622-111
	¶ 291-11
DG506AB	★ 3082
	2622-113
	¶ 291-11
DG506AC	★ 3082
	2622-114
	¶ 291-11
DG506B	★ 3082
	2624-66
	¶ 291-11
DG506C	★ 3082
	2624-67
	¶ 291-11
DG507AA	★ 3082
	2624-11
DG507AB	★ 3082
	2624-16
DG507AC	★ 3082
	2624-17
DG508AA	★ 3082
	2623-72
DG508AB	★ 3082
	2623-75
DG508AC	★ 3082
	2623-76
DG509AA	★ 3082
	2622-112
DG509AB	★ 3082
	2622-115
DG509AC	★ 3082
	2622-116
DG515A	★ 3082
	2619-85
DG515B	★ 3082
	2619-86
DG515C	★ 3082
	2619-87
DG516A	★ 3082
	2619-90
DG516B	★ 3082
	2619-91
DG516C	★ 3082
	2619-92
DG526	★ 3082
	2624-63
DG526A	★ 3082
	2624-39
DG526B	★ 3082
	2624-40
DG526C	★ 3082
	2624-41
DG527	★ 3082
	2624-12
DG527A	★ 3082
	2623-109
DG527B	★ 3082
	2623-110
DG527C	★ 3082
	2623-111
DG528A	★ 3082
	2624-13
DG528C	★ 3082
	2624-18
DG529A	★ 3082
	2623-21
DG529C	★ 3082
	2623-22
DGM111A	★ 3077
	2616-51
	2616-52
DGM111B	★ 3077
	2616-53
	2616-54
DGM122A	2619-105
DGM122B	2619-106
G115A	★ 3080
	2622-16
G115B	★ 3080
	2622-17
G116A	2622-8
G116B	2622-9
G117A	2622-5
G118A	★ 3080
	2622-18
G119A	★ 3080
	2622-24
G119B	★ 3080
	2622-25
G122A	★ 3080
	2622-21
G123A	★ 3080
	2621-100
G123B	★ 3080
	2621-101
IS03A	4461-24
IS03B	4461-26
IS03C	4461-28
IS03D	4461-30
IS03E	4461-32
IS03F	4461-34
IS03G	4461-36
IS03H	4461-38
IS05A	4464-19
IS05B	4464-21
IS05C	4464-23
IS05D	4464-25
IS05E	4464-27
IS05F	4464-29
IS05G	4464-31
IS05H	4464-33
ISO-3 Library	4478-22
ISO-5 Library	4478-23
L144A	★ 3083
	3208-28
	¶ 294-17
L144B	★ 3083
	3208-29
	¶ 294-17
L144C	★ 3083
	3208-30
	¶ 294-17
L161	★ 3083
	3162-48
	¶ 300-7
LD110	★ 3083
	2637-35
	¶ 282-11
	¶ 283-5
	¶ 308-4
LD111A	★ 3083
	2637-36
	¶ 282-11
	¶ 283-5
	¶ 308-4
LD120	★ 3083
	2637-54
	¶ 282-12
	¶ 283-5
	¶ 308-11
LD121A	★ 3083
	2637-55
	¶ 282-12
	¶ 283-5
	¶ 308-11
LD122	★ 3083
	2637-56
	¶ 282-13
	¶ 283-5
PWM125	★ 3081
	2622-28
PWM125A	★ 3081
	3230-116
PWM125C	★ 3081
	3230-117
PWM127	★ 3081
	2622-29
	★ 3081
	3230-118
PWM127A	★ 3081
	3230-119
PWM127C	★ 3081
	3230-120
PWM25	★ 3081
	2622-30
PWM25A	★ 3081
	3230-121
PWM25C	★ 3081
	3230-122
PWM27	★ 3081
	2622-31
PWM27A	★ 3081
	3230-123
PWM27C	★ 3081
	3230-124
SD5000	★ 3080
	2617-80
SD5001	★ 3080
	2617-78
SD5002	★ 3080
	2617-79
SD5200	★ 3080
	2617-81
SI3002	★ 3078
SI3705	★ 3082
	2623-101
SI520	★ 3083
	2628-2
	★ 3083
	3233-33
SI7135	★ 3083
	2637-47
SI7250	★ 3080
	2622-47
	2679-25
	¶ 289-3
SI7622A	★ 3083
	2654-6
SI7622H	★ 3083
	2655-42
SI7622R	★ 3083
	2655-43
SI7622S	★ 3083
	2654-7
SI7622Z	★ 3083
	2655-44
SI7660	★ 3081
	3239-16
SI7661	3239-14
SI7722J	2654-8
VQ1000	2683-18
VQ1001	★ 3085
	2683-19
VQ1004	★ 3085
	2683-20
VQ1006	★ 3085
	2683-21
VQ2001	★ 3085
	2683-22
VQ2004	★ 3085
	2683-23
VQ2006	★ 3085
	2683-24
VQ3001	★ 3085
	2683-25
VQ7254	★ 3085
	2683-26

Sprague Electric Company

Device	Page-Line
TDA1083	3168-8
TDA1090	3168-9
TDA1170	3172-95
TDA1190Z	3172-14
TDA2002	3164-181
TDA2002A	3164-182

Arranged alphanumerically from left to right.

© IC MASTER 1984

Sprague Electric Company (Cont'd)

Device	Page-Line
TDA2003	3165-1
TDA2008	3165-65
TDA3190	3172-15
TPQ3724	3157-160
TPQ3725	3157-161
TPQ3725A	3157-162
UCN-4202A	3235-20
	¶ 288-4
	¶ 288-13
UCN-4203A	3235-21
UCN-4401A	2682-144
UCN-4801A	2683-123
UCN-4805A	2661-79
UCN-4806A	2661-80
UCN-4807A	2680-45
UCN-4808A	2680-46
UCN-4810A	2663-143
UCN-4815A	2663-84
UCN-4821A	2683-132
UCN-4822A	2683-133
UCN-4823A	2683-134
UCN-5810A	2679-5
UCN-5812A	2679-6
UCN-5818A	2679-7
UCS-4401H	2679-8
	2682-145
	¶ 288-11
UCS-4801H	2679-9
	¶ 288-11
UCS-4810H	2679-10
	2680-49
	¶ 288-11
UCS-4815H	2663-85
	¶ 288-11
UCS-4821H	2683-135
UCS-4822H	2683-136
UCS-4823H	2683-137
UDN-2541	2682-160
UDN-2542	2682-161
UDN-2580A	3218-53
	¶ 288-13
	¶ 291-12
UDN-2585A	3218-54
	¶ 288-16
UDN-2588A	3218-55
UDN-2595A	2680-47
	¶ 288-16
UDN-2841B	3157-118
UDN-2845B	3157-119
	¶ 288-13
UDN-2878	★ **3088**
	2682-82
UDN-2879	★ **3088**
	2682-132
UDN-2935Z	3234-143
UDN-2949Z	3173-71
	3235-18
	¶ 288-13
UDN-2950Z	3234-144
UDN-2952	★ **3089**
	3234-139
UDN-2956A	2679-66
	¶ 291-12
	3157-181
	3218-56
	¶ 291-12
UDN-2957A	2679-67
	3157-182
	3218-57
UDN-2975W	2682-71
UDN-2976W	2682-72
UDN-2981A	2680-27
	3158-103
UDN-2982A	2680-8
	3158-104
UDN-2983A	2680-28
	3158-105
UDN-2984A	2680-9
	3158-106
UDN-3611M	2681-112
UDN-3612M	2681-151
UDN-3613M	2682-55
UDN-3614M	2682-21
UDN-5703A	2683-71
UDN-5706A	613-161
	2683-40
UDN-5707A	2683-50
UDN-5711M	2681-113
UDN-5712M	2681-152
UDN-5713M	2682-56
UDN-5714M	2682-22
UDN-5722M	2681-146
UDN-5732M	2681-116
UDN-5733M	2683-61
UDN-5742M	2681-117
UDN-6116	2663-61
UDN-6118	2663-107
UDN-6126	2663-62
UDN-6128	2663-108
UDN-6138	2663-109
UDN-6148	2663-110
UDN-6164A	2663-42
UDN-6510A	2680-66
UDN-6514A	2680-67
	¶ 288-16
UDN-7180A	2663-128
UDN-7183A	2662-139
UDN-7184A	2662-140
UDN-7186A	2662-141
UDN-8184A	2663-95
UDQ-2956R	2680-64
UDQ-2957	2680-65
UDS-2981H	2680-29
	3158-107
UDS-2982H	2680-10
	3158-108
UDS-2983H	2680-30
	3158-109
UDS-2984H	2680-11
	3158-110
UDS-3611H	2681-114
UDS-3612H	2681-153
UDS-3613H	2682-57
UDS-3614H	2682-23
UDS-5703H	2683-72
UDS-5706H	613-162
	2683-41
UDS-5707H	2683-51
UDS-5711H	2681-115
UDS-5712H	2681-154
UDS-5713H	2682-58
UDS-5714H	2682-24
UDS-5733H	2683-62
UDS-5790H	641-102
	2683-12
	3235-129
UDS-5791H	641-103
	2683-13
	3235-130
UGN-3013T	641-75
	3234-17
UGN-3019	641-76
	3234-18
UGN-3020	641-77
UGN-3030	641-78
	3234-19
UGN-3040T	641-79
	3234-20
UGN-3075	2680-57
UGN-3076	2680-58
UGN-3201M	641-80
UGN-3203M	641-81
UGN-3220S	641-82
	3234-21
UGN-3501	641-83
	3234-22
UGN-3604M	3234-23
UGN-3605M	3234-24
UGS-3019	641-84
	3234-25
UGS-3020	641-85
UGS-3030	641-86
	3234-26
UGS-3075	2680-59
UGS-3076	2680-60
UHC/D-400	613-153
	2683-42
UHC/D-402	614-29
	2683-73
UHC/D-403	614-30
	2683-74
UHC/D-406	613-154
	2683-43
UHC/D-407	614-8
	2683-53
UHC/D-408	614-9
	2683-54
UHC/D-432	614-18
	2683-63
UHC/D-433	614-19
	2683-64
UHC/D-500	613-155
	2683-44
UHC/D-502	614-31
	2683-75
UHC/D-503	614-32
	2683-76
UHC/D-506	613-156
	2683-45
UHC/D-507	614-10
	2683-55
UHC/D-508	614-11
	2683-56
UHC/D-532	614-20
	2683-65
UHC/D-533	614-21
	2683-66
UHD-490	2663-25
UHD-491	2663-43
UHP-400	613-157
	2683-46
UHP-402	614-33
	2683-77
UHP-403	614-34
	2683-78
UHP-406	613-158
	2683-47
UHP-407	614-12
	2683-57
UHP-408	614-13
	2683-58
UHP-432	614-22
	2683-67
UHP-433	614-23
	2683-68
UHP-480	2663-31
UHP-481	2663-74
UHP-482	2662-142
UHP-490	2663-26
UHP-491	2663-44
UHP-495	2663-45
UHP-500	613-159
	2683-48
UHP-502	614-35
	2683-79
UHP-503	614-36
	2683-80
UHP-506	613-160
	2683-49
UHP-507	614-14
	2683-59
UHP-508	614-15
	2683-60
UHP-532	614-24
	2683-69
UHP-533	614-25
	2683-70
ULN-2001A	2679-130
	¶ 289-1
	3158-55
	¶ 289-1
ULN-2002A	2679-150
	¶ 289-1
	3158-56
	¶ 289-1
ULN-2003A	2679-106
	¶ 289-1
	3158-57
	¶ 289-1
ULN-2004A	2679-83
	¶ 289-1
	3158-58
	¶ 289-1
ULN-2005A	2679-107
	3158-59
ULN-2011A	2679-131
	3158-72
ULN-2012A	2679-151
	3158-73
ULN-2013A	2679-108
	3158-74
ULN-2014A	2679-84
	3158-75
ULN-2015A	2679-109
	3158-76
ULN-2021A	2679-132
	3158-82
ULN-2022A	2679-152
	3158-83
ULN-2023A	2679-110
	3158-84
ULN-2024A	2679-85
	3158-85
ULN-2025A	2679-111
	3158-86
ULN-2031A	3158-3
ULN-2032A	3158-4
ULN-2033A	3158-5
ULN-2046A	3157-31
ULN-2047A	3157-139
ULN-2054A	3157-43
ULN-2061M	2681-37
	3157-37
ULN-2062M	2681-38
	3157-38
ULN-2064B	2682-97
	3157-120
ULN-2065B	2682-98
	3157-121
ULN-2066B	2682-99
	3157-122
ULN-2067B	2682-100
	3157-123
ULN-2068B	2682-101
	3157-124
ULN-2069B	2682-102
	3157-125
ULN-2070B	2682-103
	3157-126
ULN-2071B	2682-104
	3157-127
ULN-2074B	2682-105
	3157-128
ULN-2075B	2682-106
	3157-129
ULN-2076B	2682-107
	3157-130
ULN-2077B	2682-108
	3157-131
ULN-2081A	3158-99
ULN-2082A	3158-94
ULN-2083A	3157-173
ULN-2086A	3157-32
ULN-2111A	3168-93
	3172-16
ULN-2136A	3168-94
ULN-2140A	2619-79
ULN-2204A	3168-10
	¶ 301-17
ULN-2240A	3168-11
	¶ 300-12
ULN-2241A	3168-12
	¶ 300-12
	¶ 301-5
ULN-2242A	3168-13
	¶ 300-12
ULN-2243A	3167-105
	3168-52
ULN-2249A	3167-117
	¶ 301-5
ULN-2260A	3171-1
ULN-2270	3172-96
ULN-2280B	3164-119
ULN-2283B	3164-120
ULN-2290	3172-17
ULN-2401A	3166-11
	3239-114
ULN-2429A	3166-12
	3233-98
ULN-2430M	3220-50
ULN-2435A	3166-1
	3232-71
	¶ 307-3
ULN-2445A	3166-2
	3232-72
ULN-2455A	3166-3
	3232-73
ULN-2801A	2680-32
	3158-111
ULN-2802A	2680-39
	3158-112
ULN-2803A	2680-15
	3158-113
ULN-2804A	2680-2
	3158-114
ULN-2805A	2680-16
	3158-115
ULN-2811A	2680-33
	3158-121
ULN-2812A	2680-40
	3158-122
ULN-2813A	2680-17
	3158-123
ULN-2814A	2680-3
	3158-124
ULN-2815A	2680-18
	3158-125
ULN-2821A	2680-34
	3158-135
ULN-2822A	2680-41
	3158-136
ULN-2823A	2680-19
	3158-137
ULN-2824A	2680-4
	3158-138
ULN-2825A	2680-20
	3158-139
ULN-3310	3234-128
ULN-3330Y	3234-126
ULN-3701Z	3165-2
	¶ 288-13
ULN-3702Z	3165-3
ULN-3703Z	3165-4
ULN-3705M	3164-121
ULN-3784B	3165-5
ULN-3809A	3168-158
ULN-3810A	3168-159
ULN-3812A	3168-160
ULN-3838A	3167-118
ULN-3859A	3168-104
ULN-3889A	3168-95
ULN-3914A	3171-2
ULN-8126	3230-125
ULN-8160	3230-126
ULN-8161	3230-127
ULQ-8126	3230-128
ULS-2001H	2679-133
	3158-60
ULS-2002H	2679-153
	3158-61
ULS-2003H	2679-112
	3158-62
ULS-2004H	2679-86
	3158-63
ULS-2005H	2679-113
	3158-64
ULS-2011H	2679-134
	3158-77
ULS-2012H	2679-135
	3158-78
ULS-2013H	2679-114
	3158-79
ULS-2014H	2679-87
	3158-80
ULS-2015H	2679-115
	3158-81
ULS-2021H	2679-136
	3158-87
ULS-2022H	2679-154
	3158-88
ULS-2023H	2679-116
	3158-89
ULS-2024H	2679-88
	3158-90
ULS-2025H	2679-117
	3158-91
ULS-2045H	3157-33
ULS-2064H	2682-109
ULS-2065H	2682-110
ULS-2066H	2682-111
ULS-2067H	2682-112
ULS-2068H	2682-113
ULS-2069H	2682-114
ULS-2070H	2682-115
ULS-2071H	2682-116
ULS-2074H	2682-117
ULS-2075H	2682-118
ULS-2076H	2682-119
ULS-2077H	2682-120
ULS-2083H	3157-174
ULS-2140H	2619-80
ULS-2801H	2680-35
	3158-116
ULS-2802H	2680-42
	3158-117
ULS-2803H	2680-21
	3158-118
ULS-2804H	2680-5
	3158-119
ULS-2805H	2680-22
	3158-120
ULS-2811H	2680-36
	3158-126
ULS-2812H	2680-43
	3158-127
ULS-2813H	2680-23
	3158-128
ULS-2814H	2680-6
	3158-129
ULS-2815H	2680-24
	3158-130
ULS-2821H	2680-37
	3158-140
ULS-2822H	2680-44
	3158-141
ULS-2823H	2680-25
	3158-142
ULS-2824H	2680-7
	3158-143
ULS-2825H	2680-26
	3158-144
ULS-8126	3230-129
ULS-8160	3230-130
ULX-3704B	3165-6
ULX-3783M	3165-81
ULX-3804A	3168-22
ULX-3840A	3168-14
UTN-2886B	3158-149
UTN-2888A	3158-150

Structured Design Inc.

Device	Page-Line
SD1000	★ **4402**
	4357-2
SIMPALINK	4357-3

Sunrise Electronics

Device	Page-Line
Z1000/Z2000	★ **4403**
	4357-4
Z1200	★ **4403**
Z1200 & Z2400 Gang Programmers	4357-5
Z1248	★ **4403**
	4357-6
ZAP48	★ **4403**
ZAP68	★ **4403**
ZAP80/ZAP48/ZAP68	★ **4403**
	4357-7

Synertek

Device	Page-Line
8590	1354-56
HCMOS Library	★ **4874**
	4478-24
MBC01A2	1959-22
MBC01A2-1	1959-23
MBC020-65	1959-8
MBC020-68	1959-18
MDT-1000	1817-10
MDT-2000	1817-11
MDT20	1817-12
SY1791-02	★ **1696**
	1353-80
SY1793-02	★ **1696**
	1353-81
SY2101-1	★ **4210**
	3773-104
SY2101A	★ **4210**
	3773-63
SY2101A-2	★ **4210**
	3773-30
SY2101A-4	★ **4210**
	3773-89
SY2111-1	★ **4210**
	3773-103
SY2111A	★ **4210**
	3773-62
SY2111A-2	★ **4210**
	3773-29
SY2111A-4	★ **4210**
	3773-88
SY2112-1	★ **4210**
	3773-94
SY2112A	★ **4210**
	3773-61
SY2112A-2	★ **4210**
	3773-27
SY2112A-4	★ **4210**
	3773-87
SY2114	★ **4210**
	3777-35
SY2114-2	★ **4210**
	3776-69
SY2114-3	★ **4210**
	3776-129

¶ Indicates page number in Application Note Directory.
★ Indicates additional data is provided on the page noted.

IC MASTER

Device	Page-Line
Synertek (Cont'd)	
SY2114A-4	★ 4210 3776-70
SY2114A-5	★ 4210 3776-95
SY2114AL-1	★ 4210 3776-22
SY2114AL-2	★ 4210 3776-28
SY2114AL-3	★ 4210 3776-37
SY2114AL-4	★ 4210 3776-71
SY2114L	★ 4210 3777-36
SY2114L-2	★ 4210 3776-72
SY2114L-3	★ 4210 3776-130
SY2114LV-2	★ 4210 3776-73
SY2128-1	★ 4210 3778-15
SY2128-2	★ 4210 3778-45
SY2128-3	★ 4210 3778-79
SY2128-4	★ 4210 3778-129
SY2128L-1	★ 4210 3778-16
SY2128L-2	★ 4210 3778-46
SY2128L-3	★ 4210 3778-80
SY2128L-4	★ 4210 3778-130
SY2129-1	★ 4210 3778-17
SY2129-2	★ 4210 3778-47
SY2129-3	★ 4210 3778-81
SY2129-4	★ 4210 3778-131
SY2129L-1	★ 4210 3778-18
SY2129L-2	★ 4210 3778-48
SY2129L-3	★ 4210 3778-82
SY2129L-4	★ 4210 3778-132
SY2130	★ 4210 3777-69
SY2131	★ 4210 3777-70
SY2142	3777-42
SY2142-2	3776-79
SY2142-3	3776-132
SY2142L	3777-43
SY2142L-2	3776-80
SY2142L-3	3776-133
SY2147-3	★ 4210 3779-100
SY2147-6	★ 4210 3780-7
SY2147H	★ 4210 3779-129
SY2147H-1	★ 4210 3779-65
SY2147H-2	★ 4210 3779-76
SY2147H-3	★ 4210 3779-101
SY2147HL	★ 4210 3780-1
SY2147HL-3	★ 4210 3779-102
SY2148H	★ 4210 3776-10
SY2148H-2	★ 4210 3775-97
SY2148H-3	★ 4210 3775-117
SY2148HL	★ 4210 3776-11
SY2148HL-3	★ 4210 3775-118
SY2149H	★ 4210 3776-12
SY2149H-2	★ 4210 3775-98
SY2149H-3	★ 4210 3775-119
SY2149HL	★ 4210 3776-13
SY2149HL-3	★ 4210 3775-120
SY2158A-1	★ 4210 3777-61
SY2158A-2	★ 4210 3777-73
SY2158A-3	★ 4210 3777-81
SY2158A-4	★ 4210 3777-90
SY2158B-1	★ 4210 3777-62
SY2158B-2	★ 4210 3777-74
SY2158B-3	★ 4210 3777-82
SY2158B-4	★ 4210 3777-83
SY2158L-1	★ 4210 3777-63
SY2158L-2	★ 4210 3777-75
SY2158L-3	★ 4210 3777-84
SY2158L-4	★ 4210 3777-91
SY2159A-1	★ 4210 3777-64
SY2159A-2	★ 4210 3777-76
SY2159A-3	★ 4210 3777-85
SY2159A-4	★ 4210 3777-92
SY2159B-1	★ 4210 3777-65
SY2159B-2	★ 4210 3777-77
SY2159B-3	★ 4210 3777-86
SY2159B-4	★ 4210 3777-93
SY2159L-1	★ 4210 3777-66
SY2159L-2	★ 4210 3777-78
SY2159L-3	★ 4210 3777-87
SY2159L-4	★ 4210 3777-94
SY2167	★ 4210 3782-53
SY2167-3	★ 4210 3782-38
SY2168	★ 4210 3781-67
SY2168-3	★ 4210 3781-42
SY2169	★ 4210 3781-68
SY2169-3	★ 4210 3781-43
SY21D1	3777-67
SY21H01	3772-125
SY21H01-2	3773-3
SY21H11	3772-124
SY21H11-2	3773-2
SY21H12	3772-123
SY21H12-2	3773-1
SY23128-2	★ 4211 3786-118
SY23128-3	★ 4211 3787-19
SY23128A	★ 4211 3787-33
SY23128A-2	★ 4211 3786-119
SY23128A-3	★ 4211 3787-20
SY23130	★ 4211 3787-34
SY23130-2	★ 4211 3786-120
SY23130-3	★ 4211 3787-21
SY23130A	★ 4211 3787-35
SY23130A-2	★ 4211 3786-121
SY23130A-3	★ 4211 3787-22
SY2316A	★ 4211 3783-102
SY2316B	★ 4211 3784-40
SY2316B-2	★ 4211 3783-115
SY2316B-3	★ 4211 3783-125
SY23256-2	★ 4211 3787-56
SY23256-3	★ 4211 3787-81
SY23256A	★ 4211 3787-96
SY23256A-2	★ 4211 3787-57
SY23256A-3	★ 4211 3787-82
SY2332	★ 4211 3785-22
SY2332-2	★ 4211 3784-66
SY2332-3	★ 4211 3784-92
SY2333	★ 4211 3785-23
SY2333-2	★ 4211 3784-67
SY2333-3	★ 4211 3784-93
SY2364	★ 4211 3786-81
SY2364-3	★ 4211 3786-14
SY2364A	★ 4211 3785-96
SY2364A-3	★ 4211 3786-15
SY2365	★ 4211 3786-94
SY2365-3	★ 4211 3786-25
SY2365A	★ 4211 3786-95
SY2365A-3	★ 4211 3786-26
SY2661	★ 1696 1340-164
SY2716	3765-83
SY2716-1	3765-59
SY2716-2	3765-67
SY2801A	3758-17
SY2802E	3758-36
SY2816	3758-72
SY3308	★ 4211 3783-33
SY3308R	★ 4211 3783-27
SY3316	★ 4211 3783-103
SY3316A	★ 4211 3783-104
SY3316R	★ 4211 3783-95
SY6364	★ 4211
SY6365	★ 4211 3785-68
SY6502	★ 1696 1341-93
	★ 1696 1279-43
SY6502A	★ 1696 1341-94
SY6502B	★ 1696 1341-95
SY6502C	★ 1696 1341-96
SY6503	★ 1696 1341-97
	★ 1696 1279-44
SY6503A	★ 1696 1341-98
SY6504	★ 1696 1341-99
	★ 1696 1279-45
SY6504A	★ 1696 1341-100
SY6505	★ 1696 1341-101
	★ 1696 1281-1
SY6505A	★ 1696 1341-102
SY6506	★ 1696 1341-103
	★ 1696 1281-2
SY6506A	★ 1696 1341-104
SY6507	★ 1696 1341-105
	★ 1696 1281-3
SY6507A	★ 1696 1341-106
SY6512	★ 1696 1341-107
	★ 1696 1281-4
SY6512A	★ 1696 1341-108
SY6513	★ 1696 1341-109
	★ 1696 1281-5
SY6513A	★ 1696 1341-110
SY6514	★ 1696 1341-111
	★ 1696 1281-6
SY6514A	★ 1696 1341-112
SY6515	★ 1696 1341-113
	★ 1696 1281-7
SY6515A	★ 1696 1341-114
SY6520	★ 1696 1343-49
	1355-31
SY6520A	★ 1696 1341-143
SY6521	★ 1696 1341-144
SY6521A	★ 1696 1341-145
SY6522	★ 1696 1341-146
	1355-32
SY6522A	★ 1696 1341-147
	1355-33
SY6530	1341-150
SY6532	★ 1696 1341-152
SY6532A	★ 1696 1341-153
SY6551	★ 1696 1341-125
	¶ 289-7
SY6551A	★ 1696 1341-126
	¶ 289-7
SY6591	★ 1696 1341-135
SY6591A	★ 1696 1341-136
SY65C00	1341-115
SY65C02	★ 1696 1341-116
SY65C06	★ 1696 1341-117
SY65C12	★ 1696 1341-118
SY65C13	★ 1696 1341-119
SY65C14	★ 1696 1341-120
SY65C15	★ 1696 1341-121
SY65C20	★ 1696 1343-50
SY65C22	★ 1696 1343-51
SY65C32	★ 1696 1341-154
SY65C51	★ 1696 1341-127
SY66016	★ 1696 604-133
SY660C16	★ 1696 571-165
SY66450	★ 1696 1352-105
SY66550	★ 1696 1353-3
SY668C40	★ 1696
SY68045	★ 1696 1342-155
SY6820	1343-52
SY6821	★ 1696 1343-53
SY6845E	★ 1696 1352-101
SY6845R	★ 1696 1342-156
	1352-99
SY68B20	1343-54
SY68B21	1343-55
SY68C40	1343-76
SYM-1	1959-5
	¶ 279-2
SYM-1/68	1959-33
	¶ 279-2
SYM-1/69	1961-11
	¶ 279-2
SYM2114	★ 535 3777-37
SYM2114-3	★ 535 3776-131
SYM2114A-3	★ 535 3776-38
SYM2114A-4	★ 535 3776-74
SYM2114A-5	★ 535 3776-96
SYM2128-3	★ 535 3778-83
SYM2128-4	★ 535 3778-133
SYM2129-3	★ 535 3778-84
SYM2129-4	★ 535 3778-134
SYM2147	★ 535 3780-2
SYM2147-3	★ 535 3779-103
SYM2147-6	★ 535 3779-104
SYM2147H-2	★ 535 3779-77
SYM2147H-3	★ 535 3779-105
SYM2148H	★ 535 3776-14
SYM2148H-3	★ 535 3775-121
SYM2148H-6	★ 535 3776-17
SYM2149H	★ 535 3776-15
SYM2149H-3	★ 535 3775-122
SYM2149H-6	★ 535 3776-18
SYM2167	★ 535 3782-54
SYM2168	★ 535 3781-69
SYM2169	★ 535 3781-70
SYM21D1	3777-68
SYM23128	★ 535 3787-36
SYM23128-3	★ 535 3787-23
SYM23128A	★ 535 3787-37
SYM23128A-3	★ 535 3787-24
SYM23256-3	★ 535 3787-83
SYM23256A	★ 535 3787-97
SYM23256A-3	★ 535 3787-84
SYM2332	★ 535 3785-24
SYM2332-3	★ 535 3784-68
SYM2333	★ 535 3785-25
SYM2333-3	★ 535 3784-69
SYM2364	★ 535 3786-82
SYM2364-3	★ 535 3786-16
SYM2364A	★ 535 3786-83
SYM2364A-3	★ 535 3786-17
SYM2365	★ 535 3786-96
SYM2365-3	★ 535 3786-27
SYM2365A	★ 535 3786-97
SYM2365A-3	★ 535 3786-28
SYM3316	★ 535 3783-106
SYM3316A	★ 535 3783-107
SYZ8601	★ 1696
SYZ8602	★ 1696
SYZ8603	★ 1696
SYZ8611	★ 1696
SYZ8681	★ 1696
SYZ8682	★ 1696
SYZ86C01	★ 1696
SYZ86C61	★ 1696
SYZ8S	★ 1696
Z8601	1348-23 1281-8
Z8601A	1348-24 1281-9
Z8602	1348-25 1281-10
Z8602A	1348-26 1281-11
Z8603	1348-27 1281-12
Z8603A	1348-28 1281-13
Z8611	1348-29 1281-14
Z8611A	1348-30 1281-15
Z8681	1348-31 1281-16
Z8682	1348-32
Z86C01	1348-33 1281-17
Z86C61	1348-34
Z8S	1281-18
Z8SMCU	1348-35
Teledyne Semiconductor	
301A/C	601-44
301B/M	601-45
302A/C	601-39 ¶ 255-11
302B/M	601-40 ¶ 255-11
303A/C	601-102
303B/M	601-103
304A/C	601-112
304B/M	601-113
306A/C	601-128
307A/C	601-123
311A/C	601-52 ¶ 255-11
311B/M	601-53 ¶ 255-11
312A/C	601-59 ¶ 255-11
312B/M	601-60 ¶ 255-11
313A/C	601-61

Arranged alphanumerically from left to right.

© IC MASTER 1984

Teledyne Semiconductor (Cont'd)

Device	Page-Line
313B/M	601-62
321A/C	601-104
321B/M	601-105
322A/C	601-85
322B/M	601-86
323A/C	601-91
323B/M	601-92
324A/C	601-106
324B/M	601-107
325A/C	601-108
325B/M	601-109
326A/C	601-110
326B/M	601-111
331A/C	602-5
331B/M	602-6
332A/C	601-15
332B/M	601-16
333A/C	602-7
333B/M	602-8
334A/C	601-7
335A/C	601-11
341A/C	601-117
341B/M	601-118
342A/C	602-13
342B/M	602-14
343A/C	601-1
343B/M	601-2
344A/C	601-114
347A/C	602-15
347B/M	602-16
349A/C	602-42
350A/C	602-11
	¶ 256-3
351A/C	602-10
355A/C	602-38
	3220-51
355B/M	3220-52
361A/C	602-27
361B/M	602-28
362A/C	602-31
362B/M	602-32
363A/C	602-35
363B/M	602-36
367A	2672-48
	¶ 256-3
367A/C	602-45
	¶ 256-3
367B	2672-52
	¶ 256-3
367B/M	602-46
	¶ 256-3
367C	2672-53
	¶ 256-3
367M	2672-49
	¶ 256-3
368A	2672-50
368A/C	602-47
368C	2672-51
370A/C	601-48
370B/M	601-49
371A/C	601-29
	¶ 255-11
371B/M	601-30
	¶ 255-11
372A/C	601-22
	¶ 255-11
372B/M	601-23
	¶ 255-11
373A/C	601-26
373B/M	601-27
374A/C	601-18
375A/C	602-18
	3788-44
375B/M	602-19
	3788-45
380A/C	601-41
	¶ 255-11
	2662-77
	¶ 255-11
380B/M	601-33
	¶ 255-11
	2662-78
	¶ 255-11
381A/C	601-31
	2662-79
381B/M	601-32
	2662-80
382A/C	601-35
	2662-84
382B/M	601-36
	2662-85
383A/C	601-37
	2662-8
383B/M	601-38
	2662-9
390	601-66
390A/C	2682-73
391	601-65
391A/C	2681-26
392	601-71
392A/C	2681-60
393	601-119
393A/C	2681-62
394	601-122
394A/C	2681-61
395	601-72
395A/C	2682-74
396AC	602-30
7541S	2653-43
7541T	2651-1
9400	3233-138
	¶ 279-7
	¶ 280-4
9401	3234-1
9402	3234-2
9491AM	3236-54
9491B	3236-55
9491BM	3236-56
9495A	3236-176
9495C	3236-177
TSC1433A	2637-13
TSC14433	2637-14
TSC14433B	2637-15
TSC426	★ **3091**
TSC427	★ **3091**
TSC428	★ **3091**
TSC450C	2682-60
TSC450M	2682-61
TSC700A	★ **3092**
	2663-8
TSC701AM	★ **3093**
	2662-143
TSC7106	2637-16
TSC7106A	2637-17
TSC7107	2637-18
TSC7107A	2637-19
TSC7109BC	★ **3094**
	2634-16
TSC7109C	★ **3094**
	2634-17
TSC7109M	★ **3094**
	2634-18
TSC7116	2637-20
TSC7116A	2637-21
TSC7117	2637-22
TSC7126	2637-23
TSC7126A	2637-24
TSC7135	★ **3095**
	2637-50
	¶ 284-11
TSC7211A	2663-7
TSC7211AM	2662-133
TSC7212A	2662-144
TSC7212AM	2662-145
TSC7441S	2653-44
TSC7541A	2653-45
TSC7541B	2651-2
TSC7541J	2653-46
TSC7541K	2651-3
TSC7650	★ **3096**
	3181-4
TSC7660	★ **3097**
	3239-9
TSC800AC	★ **3098**
	2636-9
TSC800AM	★ **3098**
	2636-10
TSC800BC	★ **3098**
	2636-11
TSC800BM	★ **3098**
	2636-12
TSC805	★ **3099**
TSC826	★ **3100**
TSC8640B	2653-47
TSC8640C	2653-48
TSC8641B	2651-4
TSC8641C	2651-5
TSC8700	2627-43
TSC8701	2629-52
TSC8702	2634-13
TSC8703	2627-44
TSC8704	2629-53
TSC8705	2634-14
TSC8750	2637-42
TSC8751	2637-37
TSC9403	★ **3101**
	2679-45
	★ **3101**
	3791-33
TSC9404	★ **3101**
	2679-46
	★ **3101**
	3791-34
TSC9495	3236-178
TSC9496	3237-97

Telmos

Device	Page-Line
TH3150	4468-48
TM1070	2625-26
TM1840	2642-22
TM3050	4468-46
TM3100	4468-47
TM3200	4468-49
TM3350	4468-50
TM3500	4468-52
TM3600	4468-51
TM4030	4467-29
TM4040	4467-31
TM4054	4467-32
TM4077	4467-33
TM4100	4467-34
TM4126	4467-35
TM5001	4467-30
TM6001	★ **4877**
	4475-32
TM6002	★ **4877**
	4475-34
TM6003	★ **4877**
	4475-33
TM6004	★ **4877**
	4475-35
TM6005	★ **4877**
	4475-31
TMD2010	3233-56
TMG5002	4465-38
TML1073	2625-27
TML7650	3181-3
	3194-28
TML7650-1	3181-2
	3194-27

Texas Instruments

Device	Page-Line
9614C	2670-34
9615C	2673-63
AC5945	3168-23
AC5947	2664-9
ADC0804C	2628-26
ADC0808	2627-21
AM	638-129
AM26LS31C	2671-42
AM26LS31M	2671-43
AM26LS32C	2674-29
AM26LS32M	2674-30
AM26LS33C	2674-42
AM26LS33M	2674-43
AM26S10C	638-130
	2676-60
AM26S10M	638-131
	2676-51
AM26S11C	638-132
	2676-61
AM26S11M	2676-52
CMOS Library	★ **4882**
	4478-25
CMOSLibrary	★ **4882 4886**
DP8400	2666-5
DS3680	2683-4
	3218-59
DS8820	2674-5
DS8830	2670-47
DS8831	2668-36
	2670-54
DS8832	2668-29
	2670-56
FS990/10	1817-16
LM101A	3175-23
	3191-41
LM106	3159-29
LM107	3191-25
LM111	3159-36
LM118	3193-50
LM124	3180-69
LM137	3229-105
LM139	3162-61
LM139A	3162-28
LM148	3211-35
LM158	3180-34
	3207-16
LM1900	3180-98
LM193	3161-34
LM201A	3191-42
LM207	3191-26
LM211	3160-38
LM217	3228-125
LM218	3193-51
LM224	3180-70
LM237	3229-106
LM239	3163-27
LM248	3212-35
LM258	3180-71
LM2900	3180-96
LM2901	3163-35
LM2902	3180-13
LM2903	3161-57
LM2904	3180-14
LM293	3161-49
LM2930-5	3221-19
LM2930-8	3222-97
LM301A	3199-56
LM306	3160-10
LM307	3199-45
LM311	3160-39
LM317	3228-126
LM318	3201-40
LM324	3180-72
LM324A	3210-54
LM330-5	3221-20
LM3302	3160-45
LM337	3229-107
LM339	3163-28
LM340-12	3223-115
LM340-15	3224-83
LM340-5	3221-108
LM348	3212-36
LM350	3228-74
LM358	3180-20
LM388-3	3164-125
LM3900	3180-97
LM393	3161-50
MC1445	3156-45
MC1458	3175-14
MC1488	2668-55
MC1558	3207-50
MC3303	3213-2
MC3403	3213-28
MC34060	3230-131
MC3423	3235-119
MC3443	2675-46
MC3446	2675-20
MC3470	3155-46
MC3486	2674-24
MC3487	2671-29
MC79L05AC	3226-12
MC79L05C	3226-13
MC79L12AC	3226-115
MC79L12C	3226-116
MC79L15AC	3227-30
MC79L15C	3227-31
N8T13	2668-11
N8T23	2668-4
N8T26	638-98
N8T26A	638-99
NE5532	3206-27
NE5532A	3206-28
NE5534	3194-6
NE5534A	3194-7
NE555	3220-53
NE556	3220-90
NE592	3156-123
OP-07C	3183-59
OP-07D	3183-43
OP-07E	3182-49
PDOS01	★ **2055**
PDOS02	★ **2055**
RC4136	3212-53
RC4558	3208-59
SBP8316C	3784-3
SBP8316M	3784-4
SBP96600	★ **538**
	4469-20
SBP96700	★ **538**
	4469-19
SBP9708C	605-23
	1349-134
SBP9708M	605-24
	1349-135
SBP9818C	3783-113
SBP9818M	3783-114
SBP9900A	1287-13
SBP9900AC	1349-122
SBP9900AE	1349-123
SBP9900AM	1349-124
SBP9901	★ **539**
SBP9960C	1350-12
SBP9960M	1350-13
SBP9961C	1350-1
SBP9961M	1350-2
SBP9964C	1350-18
SBP9964M	1350-19
SBP9965C	★ **539**
	1350-6
SBP9965M	★ **539**
	1350-7
SBP9989	1283-23
SDS50	★ **1719**
SE1000C	1339-20
	1339-27
	1263-12
SE1000P	1339-21
	1339-28
	1263-13
SE1004C	1339-22
	1339-29
	1263-14
SE1100C	1339-23
	1339-30
	1263-15
SE1400P	1339-24
	1339-31
	1263-16
SE2100P	1338-3
	1263-17
SE2130P	1338-4
	1263-18
SE2200P	1339-25
	1339-32
	1263-19
SE2400P	1338-5
	1263-20
SE5534	3191-55
SE555	3220-54
SE556	3220-91
SE70P161	★ **1704**
SG1524	3230-132
SG2524	3231-1
SG3524	3231-2
SG3525A	3231-3
SG3527A	3231-4
SMJ2516-35	★ **4232**
	3784-19
SMJ2516-45	★ **4232**
	3784-41
SMJ2532-30	★ **4231**
	3784-94
SMJ2532-35	★ **4231**
	3784-120
SMJ2532-45	★ **4231**
	3785-26
SMJ2564-45	★ **4229**
	3785-44
SMJ2708-35	★ **4234**
	3783-58
SMJ2708-45	★ **4234**
	3783-63
SMJ27L08-45	★ **4234**
	3783-64
SMJ4164-12	★ **4219**
	3769-56
SMJ4164-15	★ **4219**
	3769-84
SMJ4164-20	★ **4219**
	3769-110
SMJ4416-15	★ **4220**
	3769-24
SMJ4416-20	★ **4220**
	3769-26
SN10139	3760-18
SN10140	598-14
	3771-78
SN10142	598-8
	3771-73
SN10144	598-26
	3772-19
SN10147	598-19
	3771-111
SN10148	598-13
	3771-79
SN10164	598-91
SN10174	598-71
SN16923	3164-126
SN29301	612-88
SN29308	625-66
SN29309	627-137
SN29310	610-36
SN29311	613-120
SN29312	629-136
SN29316	608-4
SN29318	639-38
SN29601	630-117
SN39301	612-89
SN39308	625-67
SN39309	627-138
SN39310	610-37
SN39311	613-121
SN39312	629-137
SN39316	608-5
SN39318	639-39
SN5400	★ **920**
	621-160
SN5401	★ **920**
	621-93
SN5402	★ **920**
	624-54
SN5403	★ **921**
	621-94
SN5404	★ **921**
	607-54
SN5405	★ **921**
	606-128
SN5406	★ **922**
	614-78
SN5407	★ **922**
	614-55
SN5408	★ **922**
	619-89
SN5409	★ **923**
	619-50
SN5410	★ **923**
	620-133
SN54100	★ **955**
	625-71
SN54107	★ **957**
	617-115
SN54109	★ **958**
	617-48
SN54110	★ **958**
	617-3
SN54111	★ **959**
	617-153
SN54116	★ **960**
	625-68
SN5412	★ **924**
	620-102
SN54120	★ **961**
	637-106
SN54121	★ **961**
	630-105
SN54122	★ **961**
	630-125
SN54123	★ **962**
	630-168
SN54125	★ **963**
	605-170
SN54126	★ **963**
	605-144
SN54128	★ **964**
	614-27
	★ **964**
	2671-26
SN5413	★ **924**
	637-136
SN54132	★ **965**
	638-25
SN54136	★ **966**
	624-132
SN5414	★ **924**
	638-60
SN54143	★ **970**
	611-156
SN54144	★ **970**
	611-158
SN54145	★ **970**
	612-57

¶ Indicates page number in Application Note Directory.
★ Indicates additional data is provided on the page noted.

IC MASTER

Texas Instruments (Cont'd)

Device	Page-Line
SN54147	★ 970 639-117
SN54148	★ 971 639-40
SN54150	★ 971 630-84
SN54151A	★ 972 629-155
SN54152A	★ 972 630-11
SN54153	★ 972 628-38
SN54154	★ 973 613-122
	★ 973 2672-58
SN54155	★ 974 613-19
SN54156	★ 974 612-171
SN54157	★ 975 629-16
SN54159	★ 976 613-130
SN5416	★ 925 614-68
SN54160	★ 977 610-38
SN54161	★ 977 608-6
SN54162	★ 978 610-78
SN54163	★ 978 608-51
SN54164	★ 979 632-31
	★ 979 3790-101
SN54165	★ 979 632-84
	★ 979 3790-34
SN54166	★ 979 632-104
	★ 979 3790-47
SN54167	★ 980 637-81
SN5417	★ 925 614-45
SN54170	★ 981 627-12
	★ 981 3770-38
SN54173	★ 982 615-132
SN54174	★ 983 615-156
SN54175	★ 983 615-46
SN54176	★ 984 609-191
SN54177	★ 984 607-144
SN54178	★ 984 631-116
	★ 984 3788-86
SN54179	★ 985 631-126
	★ 985 3788-87
SN54180	★ 985 639-79
SN54181	★ 985 604-25
SN54182	★ 986 604-80
SN54184	★ 987 637-103
	★ 987 3756-12
SN54185A	★ 988 637-96
	★ 988 3756-1
SN54188A	3760-48
SN54190	★ 989 611-79
SN54191	★ 989 609-38
SN54192	★ 990 611-43
SN54193	★ 990 609-91
SN54194	★ 990 631-158
	★ 990 3788-88
SN54195	★ 991 631-56
	★ 991 3789-8
SN54196	★ 991 610-1
SN54197	★ 992 607-145
SN54198	★ 992 632-61
	★ 992 3789-120
SN54199	★ 993 632-71
	★ 993 3789-121
SN5420	★ 926 620-47
SN5422	★ 927 620-4
SN54221	★ 994 630-143
SN5423	★ 927 623-150
SN5424	★ 928
SN54246	★ 1001 2662-28
SN54247	★ 1001 2662-10
SN54248	★ 1002 2661-135
SN54249	★ 1002 2661-102
SN5425	623-142
SN54251	★ 1003 630-34
SN54259	★ 1005 626-21
SN5426	★ 928 614-3
SN54265	★ 1007 638-11
SN5427	★ 929 623-181
SN54273	★ 1007 616-63
SN54276	★ 1008 618-112
SN54278	★ 1009 638-135
SN54279	★ 1009 625-135
SN5428	★ 929 624-55
SN54283	605-81
SN54284	★ 1011 604-123
SN54285	★ 1011 604-120
SN54290	★ 1012 609-137
SN54293	★ 1014 608-115
SN54298	★ 1015 629-66
SN5430	★ 929 622-28
SN5432	★ 930 623-85
SN5433	★ 930 624-23
SN54365A	★ 1023 606-36
SN54366A	★ 1023 606-176 614-96
SN54367A	★ 1024 606-37 614-97
SN54368A	★ 1024 606-179
SN5437	★ 932 621-47
SN54376	★ 1027 618-110
SN5438	★ 932 620-191
SN5439	★ 932 620-192
SN54390	★ 1031 610-123
SN54393	★ 1031 608-82
SN5440	★ 933 619-157
SN54425	★ 1034 605-171
SN54426	★ 1034 605-145
SN5442A	★ 933 612-90
SN5443A	★ 934 612-16
SN5444A	★ 934 612-9
SN5445	★ 934 612-47
SN5446A	★ 935 2662-29
SN5447A	★ 935 2662-11
SN5448	★ 935 2661-136
SN5449	★ 935 2661-103
SN54490	★ 1043 610-124
SN5450	★ 936 622-106
SN5451	622-124
SN5453	★ 937 623-37
SN5454	★ 938 623-26
SN5460	★ 940 622-165
SN5470	★ 943 617-1
SN5472	★ 944 617-13
SN5473	★ 944 617-116
SN5474	614-161
SN5475	★ 946 625-91
SN5476	★ 946 617-165
SN5477	★ 947 625-117
SN5480	★ 948 603-162
SN5481A	★ 948 627-1
SN5482	★ 948 604-9
SN5483A	★ 949 605-82
SN5484A	★ 949
SN5485	★ 950 603-68
SN5485A	★ 950 627-3
SN5486	★ 950 624-167
SN5490A	★ 952 609-138
SN5491A	★ 952 632-145
	★ 952 3790-123
SN5492A	★ 952 611-121
SN5493A	★ 953 608-116
SN5494	★ 953 631-146
	★ 953 3789-64
SN5495A	★ 954 631-93
	★ 954 3788-89
SN5496	★ 954 632-8
	★ 954 3789-92
SN5497	★ 954 638-159
SN54A500	★ 920
SN54ALS00	621-167
SN54ALS00A	★ 920
SN54ALS01	★ 920 621-104
SN54ALS02	★ 920 624-64
SN54ALS03	★ 921 621-105
SN54ALS04	★ 921 607-61
SN54ALS05	★ 921 606-132
SN54ALS08	★ 921 619-100
SN54ALS09	★ 923 619-55
SN54ALS10	★ 923 620-138
SN54ALS1000	★ 1114 621-168
SN54ALS1002	★ 1114 624-65
SN54ALS1003	★ 1115 621-106
SN54ALS1004	★ 1115 607-62
SN54ALS1005	★ 1115 606-133
SN54ALS1008	★ 1116 619-101
SN54ALS1010	★ 1116 620-139
SN54ALS1011	★ 1116 619-2
SN54ALS1020	★ 1117 620-52
SN54ALS1032	★ 1117 623-91
SN54ALS1034	★ 1118 606-40
SN54ALS1035	★ 1118 606-22
SN54ALS109	★ 958 617-55
SN54ALS11	★ 923 619-3
SN54ALS112	★ 959 618-43
SN54ALS113	★ 959 618-4
SN54ALS113A	★ 959
SN54ALS114	★ 960 618-80
SN54ALS12	★ 924 620-106
SN54ALS1240	★ 1119 633-150
SN54ALS1241	★ 1119 634-20
SN54ALS1242	★ 1119 633-73
SN54ALS1243	★ 1120 633-74
SN54ALS1244	★ 1120 634-21
SN54ALS1245	★ 1120 635-77
SN54ALS131	★ 964 613-101
SN54ALS133	★ 965 622-71
SN54ALS137	★ 967 613-90
SN54ALS138	★ 968 613-45
SN54ALS139	★ 968 612-126
SN54ALS15	★ 925 618-150
SN54ALS151	★ 972 629-159
SN54ALS153	★ 972 628-42
SN54ALS157	★ 975 629-20
SN54ALS158	★ 975 628-129
SN54ALS160	★ 977 610-44
SN54ALS161	★ 977 608-12
SN54ALS1616	★ 1121 605-27
SN54ALS162	★ 978 610-92
SN54ALS1620	★ 1122 636-62
SN54ALS1621	★ 1122 636-30
SN54ALS1622	★ 1122 636-31
SN54ALS1623	★ 1122 636-63
SN54ALS163	★ 978 608-57
SN54ALS1638	★ 1123 634-125
SN54ALS1639	★ 1123 634-126
SN54ALS164	★ 979 632-35
SN54ALS1640	★ 1124 634-165
SN54ALS1641	★ 1124 635-53
SN54ALS1642	★ 1124 634-143
SN54ALS1643	★ 1124 634-166
SN54ALS1644	★ 1124 635-138
SN54ALS1645	★ 1124 635-78
	★ 1124 2677-35
SN54ALS165	★ 979 632-86
SN54ALS1652	★ 1125
SN54ALS166	★ 979 632-106
SN54ALS168	★ 980 610-187
SN54ALS169	★ 980 608-183
SN54ALS16R4-1	4480-87
SN54ALS174	★ 983 615-160
SN54ALS175	★ 983 615-48
SN54ALS190	★ 989 611-83
SN54ALS191	★ 989 609-49
SN54ALS192	★ 990 611-47
SN54ALS193	★ 990 609-95
SN54ALS194	★ 990 631-160
SN54ALS20	★ 926 620-53
SN54ALS21	★ 927 618-123
SN54ALS22	★ 927 620-8
SN54ALS240	★ 998 633-151
	★ 998 2670-6
SN54ALS241	★ 999 634-22
	★ 999 2669-39
SN54ALS242	★ 999 633-75
	★ 999 2675-28
SN54ALS243	★ 1000 633-76
	★ 1000 2675-29
SN54ALS244	★ 1000 634-75
	★ 1000 2669-40
SN54ALS245	★ 1001 635-79
	★ 1001 2677-36
SN54ALS251	★ 1003 630-38
SN54ALS253	★ 1003 627-167
SN54ALS257	★ 1004 628-165
SN54ALS258	★ 1005 628-90
SN54ALS259	★ 1005 626-23
SN54ALS260	623-153
SN54ALS27	★ 929 624-2
SN54ALS273	★ 1007 616-69
SN54ALS28	★ 929 624-66
SN54ALS299	★ 1016 632-161
SN54ALS30	★ 929 622-30
SN54ALS32	★ 930 623-92
SN54ALS323	★ 1018 632-162
SN54ALS33	★ 930 624-27
SN54ALS34	★ 931 606-16
SN54ALS35	★ 931 606-20
SN54ALS352	★ 1020 627-141
SN54ALS353	★ 1021 627-107
SN54ALS365	★ 1023 606-41
SN54ALS366	★ 1023 614-99
SN54ALS367	★ 1024 606-42
SN54ALS368	★ 1024 607-1
SN54ALS37	★ 932 621-51
SN54ALS373	★ 1025 626-48
SN54ALS374	★ 1026 616-101
SN54ALS38	★ 932 620-197
SN54ALS40	★ 933 619-161
SN54ALS465	★ 1040 606-95
SN54ALS466	★ 1040 607-108
SN54ALS467	★ 1040 606-96
SN54ALS468	★ 1040 607-109
SN54ALS474	1345-92
SN54ALS518	★ 1044 603-104
SN54ALS519	★ 1044 603-105
SN54ALS520	★ 1044 603-88
SN54ALS521	★ 1044 603-89
SN54ALS522	★ 1044 603-90
SN54ALS526	★ 1045 4482-53
	★ 1045 603-151 636-88
SN54ALS527	★ 1045 4482-55
	★ 1045 603-102
SN54ALS528	★ 1046 4482-51
	★ 1046 603-149
SN54ALS533	★ 1047 626-110

Arranged alphanumerically from left to right

© IC MASTER 1984

Texas Instruments (Cont'd)

Device	Page-Line
SN54ALS534	★ 1047
	616-38
SN54ALS538	★ 1048
	613-46
SN54ALS539	★ 1049
	612-122
SN54ALS540	★ 1050
	633-148
	★ 1050
	2670-7
SN54ALS541	★ 1050
	634-23
	★ 1050
	2669-41
SN54ALS560	★ 1051
	610-156
SN54ALS561	★ 1051
	608-151
SN54ALS563	★ 1052
	626-111
SN54ALS564	★ 1052
	616-39
SN54ALS568	★ 1053
	610-177
SN54ALS569	★ 1053
	609-72
SN54ALS573	★ 1054
	626-49
SN54ALS574	★ 1054
	616-102
SN54ALS575	★ 1054
	616-103
SN54ALS576	★ 1055
	616-40
SN54ALS577	★ 1055
	616-104
SN54ALS580	★ 1056
	626-112
SN54ALS620	★ 1066
	636-64
SN54ALS621	★ 1066
	636-32
SN54ALS622	★ 1066
	636-33
SN54ALS623	★ 1066
	636-65
SN54ALS632	★ 1070
	★ 374
	639-140
	¶ 264-8
	★ 1070
	★ 374
	2665-47
	¶ 264-8
SN54ALS633	★ 374
	★ 1070
	639-141
	¶ 264-8
	★ 374
	★ 1070
	2665-48
	¶ 264-8
SN54ALS634	★ 374
	★ 1071
	639-142
	¶ 264-8
	★ 374
	★ 1071
	2665-49
	¶ 264-8
SN54ALS635	★ 374
	★ 1071
	639-135
	¶ 264-8
	★ 374
	★ 1071
	2665-50
	¶ 264-8
SN54ALS636	639-1
SN54ALS637	639-2
SN54ALS638	★ 1073
	634-127
SN54ALS639	★ 1073
	634-128
SN54ALS640	★ 1074
	634-167
SN54ALS641	★ 1074
	635-54
SN54ALS642	★ 1074
	634-144
SN54ALS643	★ 1074
	634-168
SN54ALS644	★ 1074
	635-139
SN54ALS645	★ 1074
	635-80
	★ 1074
	2677-37
SN54ALS646	★ 1076
	635-184
SN54ALS647	★ 1076
	635-178
SN54ALS648	★ 1076
	635-185
SN54ALS649	★ 1076
	635-179
SN54ALS651	★ 1078
	635-81
	635-186
SN54ALS652	★ 1078
	635-82
	635-187
SN54ALS653	★ 1079
	635-154
SN54ALS654	★ 1079
	635-161
SN54ALS677	★ 1083
	603-23
SN54ALS678	★ 1083
	603-24
SN54ALS679	★ 1084
	603-25
SN54ALS680	★ 1084
	603-26
SN54ALS688	★ 1088
	603-126
SN54ALS689	★ 1088
	603-106
SN54ALS74	★ 945
	614-168
SN54ALS8003	★ 1128
	619-144
SN54ALS804	★ 1094
	614-108
SN54ALS805	★ 1095
	614-112
SN54ALS808	★ 1095
	614-104
SN54ALS832	★ 1098
	614-116
	623-128
SN54ALS857	★ 1102
	633-134
SN54ALS86	★ 951
	624-169
SN54ALS873	★ 1106
	625-77
SN54ALS874	★ 1106
	614-131
SN54ALS876	★ 1107
	614-132
SN54ALS878	★ 1108
	614-133
SN54ALS879	★ 1108
	614-134
SN54ALS880	★ 1109
	625-159
SN54AS00	★ 920
	621-171
SN54AS02	★ 920
	624-70
SN54AS04	★ 921
	607-65
SN54AS08	★ 922
	619-104
SN54AS10	★ 923
	620-142
SN54AS1000	★ 1114
	621-172
SN54AS1002	★ 1114
	624-71
SN54AS1004	★ 1115
	607-66
SN54AS1008	★ 1116
	619-105
SN54AS1032	★ 1117
	623-95
SN54AS1034	★ 1118
	606-14
	606-46
SN54AS1036	★ 1118
	614-16
	624-72
SN54AS109	★ 958
	617-57
SN54AS11	★ 923
	619-6
SN54AS112	★ 959
	618-45
SN54AS113	★ 959
	618-6
SN54AS114	★ 960
	618-82
SN54AS1242	633-81
SN54AS1243	633-82
SN54AS131	★ 964
	613-103
SN54AS137	★ 967
	613-92
SN54AS138	★ 968
	613-49
SN54AS139	★ 968
	612-127
SN54AS150	★ 971
	630-86
SN54AS151	★ 972
	629-161
SN54AS153	★ 972
	628-44
SN54AS157	★ 975
	629-22
SN54AS158	★ 975
	628-131
SN54AS160	★ 977
	610-46
SN54AS161	★ 977
	608-14
SN54AS162	★ 978
	610-94
SN54AS163	★ 978
	608-59
SN54AS168	★ 980
	611-1
SN54AS169	★ 980
	608-185
SN54AS174	★ 983
	615-162
SN54AS175	★ 983
	615-50
SN54AS181A	★ 985
	604-27
SN54AS182	★ 986
	604-82
SN54AS194	★ 990
	631-162
SN54AS195	★ 991
	631-58
SN54AS20	★ 926
	620-56
SN54AS21	★ 927
	618-125
SN54AS230	★ 998
	634-78
SN54AS231	★ 998
	634-79
SN54AS240	★ 998
	633-152
	★ 998
	2670-8
SN54AS241	★ 999
	634-27
	★ 999
	2669-42
SN54AS242	★ 999
	633-83
SN54AS243	★ 1000
	633-84
SN54AS244	★ 1000
	634-28
SN54AS245	★ 1001
	635-88
	★ 1001
	2678-26
SN54AS251	★ 1003
	630-40
SN54AS253	★ 1003
	627-169
SN54AS257	★ 1004
SN54AS258	★ 1005
	628-92
SN54AS2620	★ 1126
	635-39
SN54AS2623	★ 1126
	635-45
SN54AS264	★ 1006
	604-83
SN54AS2640	★ 1127
	635-40
SN54AS2643	635-43
SN54AS2645	★ 1127
	635-46
SN54AS27	★ 929
	624-4
SN54AS280	★ 1009
	639-81
SN54AS282	★ 1010
	604-84
SN54AS286	★ 1012
	639-110
SN54AS298	★ 1015
	629-68
SN54AS299	★ 1016
	632-165
SN54AS30	★ 929
	622-32
SN54AS32	★ 930
	623-96
SN54AS323	★ 1018
	632-166
SN54AS34	★ 931
	606-18
SN54AS352	★ 1020
	627-143
SN54AS353	★ 1021
	627-108
SN54AS373	★ 1025
	626-52
SN54AS374	★ 1026
	616-109
SN54AS395	★ 1031
	631-129
SN54AS533	★ 1047
	626-116
SN54AS534	★ 1047
	616-41
SN54AS573	★ 1054
	626-53
SN54AS574	★ 1054
	616-110
SN54AS575	★ 1054
	616-111
SN54AS576	★ 1055
	616-46
SN54AS577	★ 1055
	616-112
SN54AS580	★ 1056
	626-117
SN54AS620	★ 1066
	636-72
SN54AS621	★ 1066
	636-40
SN54AS622	★ 1066
	636-41
SN54AS623	★ 1066
	636-73
SN54AS638	★ 1073
	634-135
SN54AS639	★ 1073
	634-136
SN54AS640	★ 1074
	635-9
SN54AS641	★ 1074
	635-58
SN54AS642	★ 1074
	634-148
SN54AS643	★ 1074
	635-10
SN54AS644	★ 1074
	635-143
SN54AS645	★ 1074
	635-89
SN54AS646	★ 1076
	636-8
SN54AS648	★ 1076
	636-9
SN54AS651	★ 1078
	635-11
SN54AS652	★ 1078
	635-12
SN54AS74	★ 945
	614-170
SN54AS756	★ 1091
	633-138
SN54AS757	★ 1091
	634-11
SN54AS758	★ 1092
	633-61
SN54AS759	★ 1092
	633-62
SN54AS760	★ 1092
	634-111
SN54AS762	★ 1093
	634-112
SN54AS763	★ 1093
	634-109
SN54AS800	★ 1093
	613-142
SN54AS802	★ 1094
	613-144
SN54AS804	622-17
SN54AS804A	★ 1094
	614-110
SN54AS805	624-118
SN54AS805A	★ 1095
	614-114
SN54AS808	619-142
SN54AS808A	★ 1095
	614-106
SN54AS821	★ 1096
	616-180
SN54AS822	★ 1096
	616-178
SN54AS823	★ 1096
	616-176
SN54AS824	★ 1097
	616-174
SN54AS825	★ 1097
	616-172
SN54AS826	★ 1097
	616-170
SN54AS832	623-130
SN54AS832A	★ 1098
	614-118
	★ 1098
SN54AS841	★ 1098
	626-152
SN54AS842	★ 1098
	626-150
SN54AS843	★ 1099
	626-146
SN54AS844	★ 1099
	626-144
SN54AS845	★ 1099
	626-138
SN54AS846	★ 1100
	626-100
SN54AS850	★ 1100
	630-70
SN54AS851	★ 1100
	630-71
SN54AS852	★ 1101
	636-98
SN54AS856	★ 1101
	636-99
SN54AS857	★ 1102
	633-136
SN54AS866	★ 1103
	605-126
SN54AS867	★ 1103
	608-170
	¶ 254-9
SN54AS869	★ 1103
	608-171
	¶ 254-9
SN54AS870	★ 1104
	626-161
SN54AS871	★ 1105
	626-162
SN54AS873	★ 1106
	625-79
SN54AS874	★ 1106
	614-139
SN54AS876	★ 1107
	614-140
SN54AS877	★ 1107
	639-25
SN54AS878	★ 1108
	614-141
SN54AS879	★ 1108
	614-142
SN54AS880	★ 1109
	625-161
SN54AS881A	★ 1109
	604-28
SN54AS882	★ 1110
	604-85
SN54AS885	★ 1110
	603-128
SN54AS888	★ 1111
	★ 1129
	1337-73
SN54AS889	★ 1111
	★ 1129
	1337-74
SN54AS890	★ 1112
	★ 1142
	1337-77
SN54AS891	★ 1112
	★ 1142
	1337-78
SN54AS894	605-45
SN54AS897	★ 1113
	603-21
SN54AS95	★ 954
	631-95
SN54H00	★ 920
	621-187
SN54H01	★ 920
	621-114
SN54H04	★ 921
	607-79
SN54H05	606-140
SN54H10	★ 923
	620-152
SN54H101	★ 956
	617-38
SN54H102	★ 956
	617-34
SN54H103	★ 956
	618-41
SN54H106	★ 957
	618-56
SN54H108	★ 958
	618-1
SN54H11	★ 923
	619-17
SN54H15	★ 925
	618-152
SN54H183	★ 986
	603-173
SN54H20	★ 926
	620-68
SN54H21	★ 927
	618-131
SN54H22	★ 927
	620-14
SN54H30	★ 929
	622-38
SN54H40	★ 933
	619-169
SN54H50	★ 936
	622-112
SN54H51	★ 936
	622-133
SN54H52	★ 937
	622-93
SN54H53	★ 937
	623-16
SN54H54	★ 938
	623-9
SN54H55	★ 939
	623-1
SN54H60	★ 940
	637-164
SN54H61	★ 940
	638-6
SN54H62	★ 941
	638-87
SN54H71	★ 943
	617-30
SN54H72	★ 944
	617-19
SN54H73	★ 944
	617-127
SN54H74	★ 945
	615-9
SN54H76	★ 946
	617-170
SN54H78	★ 947
	617-84
SN54H87	★ 951
	638-153
SN54HC00	583-118
SN54HC02	585-78
SN54HC04	574-31
SN54HC08	582-154

¶ Indicates page number in Application Note Directory.
★ Indicates additional data is provided on the page noted.

IC MASTER

Texas Instruments (Cont'd)

Device	Page-Line
SN54HC10	583-58
SN54HC107	581-197
SN54HC109	582-52
SN54HC11	582-112
SN54HC113	581-148
SN54HC132	593-114
SN54HC133	583-166
SN54HC137	579-16
SN54HC138	578-182
SN54HC139	578-133
SN54HC14	593-155
SN54HC151	588-180
SN54HC154	579-87
SN54HC157	588-98
SN54HC158	588-117
SN54HC160	576-124
SN54HC162	576-85
SN54HC164	591-111
SN54HC165	591-86
SN54HC173	580-121
SN54HC174	580-184
SN54HC175	580-150
SN54HC192	576-176
SN54HC194	590-115
SN54HC195	590-146
SN54HC20	583-9
SN54HC221	589-161
SN54HC245	594-158
SN54HC259	587-77
SN54HC266	585-189
SN54HC27	585-24
SN54HC273	581-11
SN54HC299	591-159
SN54HC30	583-153
SN54HC32	584-113
SN54HC365	573-78
SN54HC366	573-23
SN54HC368	573-24
SN54HC374	581-124
SN54HC390	577-45
SN54HC393	575-23
SN54HC4017	576-47
SN54HC4060	575-181
SN54HC4075	584-73
SN54HC42	578-62
SN54HC423	589-162
SN54HC533	587-27
SN54HC534	581-60
SN54HC563	587-28
SN54HC573	586-178
SN54HC574	581-125
SN54HC595	591-122
SN54HC597	591-94
SN54HC645	594-159
SN54HC646	594-100
SN54HC648	594-86
SN54HC688	571-143
SN54HC73	581-198
SN54HC74	580-82
SN54HC75	586-79
SN54HC76	582-53
SN54HC77	586-38
SN54HC85	571-134
SN54HC86	585-164
SN54L00	★ **920** 621-189
SN54L02	★ **920** 624-81
SN54L03	★ **921** 621-95
SN54L04	★ **921** 607-55
SN54L10	★ **923** 620-134
SN54L122	★ **961** 630-127
SN54L123	630-170
SN54L153	★ **972** 628-51
SN54L154	★ **973**
SN54L157	★ **975** 629-30
SN54L164	3790-79
SN54L192	★ **990** 611-54
SN54L193	★ **990** 609-102
SN54L20	★ **926** 620-70
SN54L30	★ **929** 622-40
SN54L42	★ **933** 612-91
SN54L43	★ **934** 612-17
SN54L44	★ **934** 612-10
SN54L46	596-148
SN54L47	★ **934** 596-130
SN54L51	★ **936** 622-125
SN54L54	★ **938** 623-27
SN54L55	★ **939** 622-170
SN54L71	★ **943** 617-32
SN54L72	★ **944** 617-20
SN54L73	★ **944** 617-129
SN54L74	★ **945** 615-11
SN54L75	★ **946** 625-93
SN54L77	★ **947**
SN54L78	★ **947** 617-86
SN54L85	★ **950** 603-73
SN54L86	★ **950** 624-177
SN54L90	★ **952** 609-142
SN54L91	★ **952** 3790-109
SN54L93	★ **953** 608-120
SN54L95	★ **954** 631-97
	★ **954** 3788-90
SN54L96	★ **954** 632-10
SN54L98	★ **955** 631-30
SN54L99	★ **955** 3788-91
SN54LS00	★ **920** 622-6
SN54LS01	★ **920** 621-136
SN54LS02	★ **920** 624-103
SN54LS03	★ **921** 621-137
SN54LS04	★ **921** 607-94
SN54LS05	★ **921** 606-155
SN54LS08	★ **922** 619-132
SN54LS09	★ **923** 619-73
SN54LS10	★ **923** 620-167
SN54LS104	636-142
SN54LS105	636-143
SN54LS107A	★ **957** 617-149
SN54LS109A	★ **958** 617-77
SN54LS11	★ **923** 619-31
SN54LS112A	★ **959** 618-69
SN54LS113A	618-26
SN54LS114A	★ **960** 618-102
SN54LS12	★ **924** 620-117
SN54LS122	★ **961** 630-134
SN54LS123	★ **962** 630-178
	¶ 259-9
SN54LS125A	★ **962** 606-12
SN54LS126A	★ **962** 605-159
SN54LS13	★ **924** 637-156
SN54LS132	★ **965** 638-42
SN54LS136	★ **966** 624-147
SN54LS137	★ **967** 613-96
SN54LS138	★ **968** 613-70
SN54LS139	★ **968** 612-150
SN54LS14	★ **924** 638-78
SN54LS145	★ **970** 612-64
SN54LS147	★ **970** 639-121
SN54LS148	★ **971** 639-54
SN54LS15	★ **925** 618-166
SN54LS151	★ **972** 629-181
SN54LS152A	★ **972** 630-17
SN54LS153	★ **972** 628-65
SN54LS155	★ **974** 613-33
SN54LS156	★ **974** 613-2
SN54LS157	★ **975** 629-44
SN54LS158	★ **975** 628-152
SN54LS160A	★ **977** 610-65
SN54LS161A	★ **977** 608-33
SN54LS162A	★ **978** 610-113
SN54LS163A	★ **978**
SN54LS164	★ **979** 632-54
	★ **979** 3790-102
SN54LS165	★ **979** 632-93
	★ **979** 3790-48
SN54LS166	★ **979** 632-113
	★ **979** 3790-49
SN54LS168	611-22
SN54LS169	609-19
SN54LS169A	609-20
SN54LS170	★ **981** 627-25
	★ **981** 3770-39
SN54LS171	★ **981** 615-94
SN54LS173A	★ **982** 615-143
SN54LS174	★ **983** 615-183
SN54LS175	★ **983** 615-70
SN54LS18	★ **926** 637-157
SN54LS181	★ **985** 604-56
SN54LS183	★ **986** 604-2
SN54LS189A	★ **988** 3771-30
SN54LS19	★ **926** 638-79
SN54LS190	★ **989** 611-103
SN54LS191	★ **989** 609-68
SN54LS192	★ **990** 611-69
SN54LS193	★ **990** 609-115
SN54LS194A	★ **990** 631-179
	★ **990** 3788-92
SN54LS195A	★ **991** 631-71
	★ **991** 3789-9
SN54LS196	★ **991** 610-13
SN54LS197	★ **992** 607-160
SN54LS20	★ **926** 620-84
SN54LS21	★ **927** 618-146
SN54LS211	3771-53
SN54LS212	3771-54
SN54LS213	3771-57
SN54LS216	3771-89
SN54LS217	3771-90
SN54LS218	3771-62
SN54LS219A	★ **994** 3771-31
SN54LS22	★ **927** 620-27
SN54LS221	★ **994** 630-152
SN54LS222	★ **995** 3757-6
SN54LS224	★ **995** 3757-7
SN54LS227	★ **997** 3757-10
SN54LS228	★ **997** 3757-11
SN54LS24	★ **928** 638-43
SN54LS240	633-179
	2670-9
SN54LS241	634-59
	2669-43
SN54LS242	633-118
	2675-30
SN54LS243	633-119
	2675-31
SN54LS244	634-101
	2669-44
SN54LS245	635-129
SN54LS247	★ **1001** 2662-12
SN54LS247A	★ **1001** 2662-13
SN54LS248	★ **1002** 2661-137
SN54LS249	★ **1002** 2661-104
SN54LS251	★ **1003** 630-60
	★ **1003** 1349-142
SN54LS253	★ **1003** 628-16
SN54LS257A	★ **1004** 628-186
SN54LS258A	★ **1005** 628-114
SN54LS259	★ **1005** 626-38
	★ **1005** 1349-129
SN54LS26	★ **928** 621-31
SN54LS260A	623-163
SN54LS261	★ **1006** 604-117
SN54LS266	★ **1007** 625-46
SN54LS27	★ **929** 624-19
SN54LS273	★ **1007** 616-83
SN54LS275	★ **1008** 605-122
SN54LS279	★ **1009** 625-149
SN54LS28	★ **929** 624-104
SN54LS280	★ **1009** 633-33
SN54LS283	★ **1011** 605-115
SN54LS289A	★ **1012** 3771-25
SN54LS290	★ **1012** 609-165
SN54LS292	★ **1013** 612-2
SN54LS293	★ **1014** 608-145
SN54LS294	611-168
SN54LS295B	★ **1014** 631-39
	★ **1014** 3789-10
SN54LS297	★ **1015** 637-71
	¶ 258-13
	★ **1015** 3214-32
	¶ 258-13
SN54LS298	★ **1015** 629-103
SN54LS299	★ **1016** 633-11
	★ **1016** 3790-8
SN54LS30	★ **929** 622-54
SN54LS31	★ **930** 636-152
SN54LS311	3771-49
SN54LS312	3771-50
SN54LS313	3770-69
SN54LS316	3771-85
SN54LS317	3771-86
SN54LS318	3771-60
SN54LS319A	★ **1017** 3771-26
SN54LS32	★ **930** 623-118
SN54LS320	★ **1017** 637-65
SN54LS321	★ **1017** 637-66
SN54LS322A	★ **1018** 605-135
SN54LS323	★ **1018** 633-12
	★ **1018** 3790-9
SN54LS324	3214-156
SN54LS325	637-108
	3215-32
SN54LS326	637-109
	3215-33
SN54LS327	637-110
	3215-34
SN54LS33	★ **930** 624-38
SN54LS347	★ **1019** 2661-149
SN54LS348	★ **1019** 639-55
SN54LS352	★ **1020** 627-161
SN54LS353	★ **1021** 627-127
SN54LS354	★ **1021** 630-27
SN54LS355	★ **1022** 630-23
SN54LS356	★ **1022** 630-28
SN54LS357	★ **1023** 630-24
SN54LS360	2679-20
SN54LS361	2679-19
SN54LS362	1349-136
SN54LS365A	★ **1023** 606-78
	★ **1023** 2670-18
SN54LS366A	★ **1023** 607-31
	★ **1023** 2670-22
SN54LS367A	★ **1024** 606-79
	★ **1024** 2670-19
SN54LS368A	★ **1024** 607-32
	★ **1024** 2670-23
SN54LS37	★ **932** 621-67
SN54LS373	★ **1025** 626-86
SN54LS374	★ **1026** 616-137
SN54LS375	★ **1026** 625-111
SN54LS377	★ **1027** 616-164
SN54LS378	★ **1027** 616-20
SN54LS379	★ **1028** 615-113
SN54LS38	★ **932** 621-14
SN54LS381	★ **1028** 604-57
SN54LS382	★ **1029** 604-58
SN54LS384	★ **1029** 605-19
SN54LS385	★ **1030** 603-14
SN54LS386	★ **1030** 625-9
SN54LS390	★ **1031** 610-149
SN54LS393	★ **1031** 608-97
SN54LS395A	★ **1031** 631-139
	★ **1031** 3789-11
SN54LS396	★ **1032** 626-165
SN54LS398	★ **1032** 629-104
SN54LS399	★ **1032** 629-105
SN54LS40	★ **933** 619-184
SN54LS42	★ **933** 612-105
SN54LS422	★ **1033** 630-118
SN54LS423	★ **1033** 630-154
SN54LS424	1345-93
SN54LS440	★ **1035**
	★ **1036** 2675-7
SN54LS441	★ **1035**
	★ **1036** 2675-8
SN54LS442	★ **1035**
	★ **1036** 633-126
	★ **1035**
	★ **1036** 2675-10
SN54LS443	★ **1035**
	★ **1036** 633-127
	★ **1035**
	★ **1036** 2675-11
SN54LS444	★ **1035**
	★ **1036** 633-128
	★ **1035**
	★ **1036** 2675-12
SN54LS445	★ **1037** 612-37
SN54LS446	★ **1038** 2675-32
SN54LS447	★ **1038** 2661-150
SN54LS448	★ **1039** 633-129
	★ **1039** 2675-9
SN54LS449	★ **1039** 2675-33
SN54LS46	★ **935** 2662-30
SN54LS465	★ **1040** 606-111
SN54LS466	★ **1040** 607-114
SN54LS467	★ **1040** 606-112

Arranged alphanumerically from left to right.

© IC MASTER 1984

Texas Instruments (Cont'd)

Device	Page-Line
SN54LS468	★ 1040 607-115
SN54LS47	★ 935 2662-14
SN54LS48	★ 935 2661-138
SN54LS49	★ 935 2661-105
SN54LS490	★ 1043 610-150
SN54LS51	★ 936 622-147
SN54LS54	★ 938 623-51
SN54LS540	★ 1050 633-180
	★ 1050 2670-10
SN54LS541	★ 1050 634-60
	★ 1050 2669-45
SN54LS55	★ 939 622-181
SN54LS56	★ 939 639-143
SN54LS57	★ 940 639-145
SN54LS590	★ 1056 608-159
SN54LS591	★ 1056 608-160
SN54LS592	★ 1057 608-155
SN54LS593	★ 1057 608-156
SN54LS594	★ 1058 632-127
SN54LS595	★ 1058 632-128
SN54LS596	★ 1058 632-129
SN54LS597	★ 1059 632-117
SN54LS598	★ 1059 632-118
SN54LS599	★ 1060 632-130
SN54LS600	636-162
SN54LS600A	636-154
SN54LS601	636-163
SN54LS601A	636-155
SN54LS602	636-164
SN54LS602A	636-156
SN54LS603	636-165
SN54LS603A	636-157
SN54LS604	★ 1063 626-2
SN54LS605	★ 1063 626-3
SN54LS606	★ 1063 626-4
SN54LS607	★ 1063 626-5
SN54LS608	★ 1064 626-6
SN54LS610	★ 1065 637-33
	¶ 264-15
SN54LS611	★ 1065 637-34
	¶ 264-15
SN54LS612	★ 1065 637-35
	¶ 264-15
SN54LS613	★ 1065 637-36
	¶ 264-15
SN54LS620	★ 1066 2677-38
SN54LS621	★ 1066 2677-14
SN54LS622	★ 1066 2677-15
SN54LS623	★ 1066 2677-39
SN54LS624	★ 1067 637-87
	★ 1067 3214-157
SN54LS625	★ 1067 637-115
	★ 1067 3215-35
SN54LS626	★ 1067 637-116
	★ 1067 3215-36
SN54LS627	★ 1068 637-117
	★ 1068 3215-37
SN54LS628	★ 1068 637-88
	★ 1068 3214-158
SN54LS629	★ 1068 637-118
	★ 1068 3215-38
SN54LS63	★ 941 638-50
SN54LS630	★ 1069 2665-51
	¶ 319-4
SN54LS631	★ 1069 2665-52
	¶ 319-4
SN54LS636	★ 1072
	★ 1153 2665-53
SN54LS637	★ 1072
	★ 1153 2665-54
SN54LS640	★ 1074 635-31
	★ 1074 2677-40
SN54LS641	★ 1074 635-66
	★ 1074 2677-16
SN54LS642	★ 1074 634-155
	★ 1074 2677-17
SN54LS643	★ 1074
	★ 1074
	★ 1075 635-32
	★ 1074
	★ 1074
	★ 1075 2677-41
SN54LS644	★ 1074 635-148
	★ 1074 2677-18
SN54LS645	★ 1074 635-130
	★ 1074 2677-42
SN54LS646	★ 1076 2678-7
SN54LS647	★ 1076 2678-1
SN54LS648	★ 1076 2678-8
SN54LS649	★ 1076 2678-2
SN54LS651	★ 1078 635-188
SN54LS652	★ 1078 635-189
SN54LS653	★ 1079 635-157
SN54LS654	★ 1079 635-164
SN54LS668	★ 1080 611-23
SN54LS669	★ 1080 609-21
SN54LS670	★ 1080 627-39
	★ 1080 3770-53
SN54LS671	★ 1081 631-26
SN54LS672	★ 1081 631-27
SN54LS673	★ 1082 633-59
SN54LS674	★ 1082 633-46
SN54LS68	★ 942 611-153
SN54LS681	★ 1085 605-40
SN54LS682	★ 1086 603-139
SN54LS683	★ 1086 603-118
SN54LS684	★ 1086 603-140
SN54LS685	★ 1086 603-119
SN54LS686	★ 1087 603-141
SN54LS687	★ 1087 603-120
SN54LS688	★ 1088 603-142
SN54LS689	★ 1088 603-121
SN54LS69	★ 942 611-151
SN54LS690	★ 1089 610-114
SN54LS691	★ 1089 607-172
SN54LS692	★ 1089 610-115
SN54LS693	★ 1089 607-173
SN54LS696	★ 1090 610-169
SN54LS697	★ 1090 608-164
SN54LS698	★ 1090 610-170
SN54LS699	★ 1090 608-165
SN54LS73A	★ 944 617-150
SN54LS74A	★ 945
	★ 946 615-25
SN54LS75	625-112
SN54LS76A	★ 946 617-181
SN54LS77	★ 947 625-123
SN54LS78A	★ 947 617-93
SN54LS83A	★ 949 605-116
SN54LS85	★ 950 603-69
SN54LS86	★ 950 625-10
SN54LS90	★ 952 609-166
SN54LS91	★ 952 632-153
	★ 952 3790-124
SN54LS92	★ 952 611-135
SN54LS924	★ 1014
SN54LS93	★ 953 608-146
SN54LS95B	★ 954 631-109
	★ 954 3788-93
SN54LS96	★ 954 632-14
	★ 954 3789-94
SN54PL16L8-1	★ 4901
	★ 4910 4480-88
SN54PL16R4-1	★ 4901
	★ 4910 4480-89
SN54PL16R6-1	★ 4902
	★ 4910 4480-90
SN54PL16R8-1	★ 4902
	★ 4910 4480-91
SN54PL20L8	★ 4903
	★ 4914 4480-1
SN54PL20R4	★ 4903
	★ 4914 4480-2
SN54PL20R6	★ 4904
	★ 4914 4480-3
SN54PL20R8	★ 4904
	★ 4914 4480-4
SN54PL333	4482-93
SN54PL335	4482-91
SN54PL839	★ 4905
	★ 4918 4482-59
SN54PL840	★ 4905
	★ 4918 4482-57
SN54PLR19L8	★ 4906
	★ 4922 4480-5
SN54PLR19R4	★ 4906
	★ 4922 4480-6
SN54PLR19R6	★ 4907
	★ 4922 4480-7
SN54PLR19R8	★ 353
	★ 4907
	★ 4922 4480-8
SN54PLT19L8	★ 353
	★ 4908
	★ 4926 4480-9
SN54PLT19R4	★ 353
	★ 4908
	★ 4926 4480-10
SN54PLT19R6	4480-11
SN54PLT19R8	★ 353
	★ 4909
	★ 4926 4480-12
SN54S00	★ 920 622-15
SN54S02	★ 920 624-114
SN54S03	★ 921 621-147
SN54S04	★ 921 607-104
SN54S05	★ 921 606-164
SN54S08	★ 921 619-140
SN54S09	★ 923 619-77
SN54S10	★ 923 620-176
SN54S11	619-40
SN54S112	★ 959 618-78
SN54S113	★ 959 618-35
SN54S114	★ 960 618-108
SN54S124	★ 962 3215-39
SN54S132	★ 965 638-48
SN54S133	★ 965 622-87
SN54S134	★ 965 622-69
SN54S135	★ 966 624-127
SN54S138	★ 968 613-78
SN54S139	★ 968 612-159
SN54S140	★ 969 613-140
	★ 969 2670-48
SN54S15	★ 925 618-173
SN54S151	★ 972 630-1
SN54S153	★ 972 628-73
SN54S157	★ 975 629-53
SN54S158	★ 975 628-161
SN54S162	★ 978 610-121
SN54S163	★ 978 608-79
SN54S168	★ 980 611-25
SN54S169	★ 980 609-26
SN54S174	★ 983 615-192
SN54S175	★ 983 615-79
SN54S181	★ 985 604-69
SN54S182	★ 986 604-105
SN54S189A	★ 988 3771-5
SN54S194	★ 990 631-185
	★ 990 3789-25
SN54S195	★ 991 631-79
	★ 991 3789-26
SN54S196	★ 991 610-17
SN54S197	★ 992 607-162
SN54S20	★ 926 620-93
SN54S22	★ 927 620-34
SN54S226	★ 996 638-133
SN54S240	634-8
	2670-11
SN54S241	634-67
	2669-46
SN54S244	634-107
SN54S251	★ 1003 630-68
SN54S253	★ 1003 628-24
SN54S257	★ 1004 628-194
SN54S258	★ 1005 628-123
SN54S260	★ 1006 623-169
SN54S274	★ 1008 604-125
SN54S275	★ 1008 605-124
SN54S280	★ 1009 639-106
SN54S281	★ 1010 605-43
SN54S283	★ 1011 605-119
SN54S289A	★ 1012 3770-127
SN54S299	★ 1016 633-17
	★ 1016 3790-12
SN54S30	★ 929 622-60
SN54S32	★ 930 623-126
SN54S37	★ 932 621-71
SN54S373	★ 1025 626-96
SN54S374	★ 1026 616-147
SN54S38	★ 932 621-18
SN54S381	★ 1028 604-70
SN54S40	★ 933 619-193
SN54S412	★ 1033 626-97
	★ 1033 1345-149
SN54S436	★ 1035
	★ 1036 614-84
	★ 1035
	★ 1036 2683-86
SN54S437	★ 1035
	★ 1036 614-85
	★ 1035
	★ 1036 2683-87
SN54S455	3764-13
SN54S482	★ 1042 637-55
	★ 1042 1337-64
SN54S484	★ 1043 3756-14
SN54S485	★ 1043 3756-10
SN54S51	★ 936 622-156
SN54S64	★ 941 623-66
SN54S65	623-74
SN54S74	615-33
SN54S740	634-116
SN54S744	634-68
SN54S85	★ 950 603-76
SN54S86	★ 950 625-19
SN54SL245	2677-43
SN55107A	2673-28
SN55107B	2673-42
SN55108A	2673-35
SN55108B	2673-47
SN55109A	2671-7
SN55110A	2671-14
SN55113	2670-59
SN55114	2670-35
SN55115	2674-1
SN55116	2678-50
SN55117	2678-56
SN55118	2678-52
SN55119	2678-54
SN55121	2668-12
SN55122	2672-22
SN55128	2670-37
SN55138	2676-39
SN55140	2672-6
SN55141	2672-7
SN55142A	2672-2
SN55143A	2672-3
SN55150	2668-21
SN55152	2674-6
SN55157	2673-55
SN55173	2674-31
SN55180	636-127
SN55182	2674-7
SN55183	2670-49
SN55188	2668-56
SN55189	2672-32
SN55189A	2672-41
SN5520	2684-10
SN5522	2684-46
SN55232	2684-24
SN55234	2684-17
SN55236	2684-13
SN55237	2684-14
SN5524	2684-36
SN5528	2684-41
SN55325	2680-77
SN55326	2680-83
SN55327	2680-84
SN55329	2684-71
SN55355	2682-167
SN55363	2681-28
SN55365	2683-1
SN55369	2681-55
SN55426B	2662-94
SN55427B	2662-95
SN55450B	2681-90
SN55451B	2681-91
SN55452B	2681-132
SN55453B	2682-36
SN55454B	2682-3

¶ Indicates page number in Application Note Directory.
★ Indicates additional data is provided on the page noted.

IC MASTER

Texas Instruments (Cont'd)

Device	Page-Line
SN55460	2681-92
SN55461	2681-93
SN55462	2681-133
SN55463	2682-37
SN55464	2682-4
SN55470	2681-94
SN55471	2681-95
SN55472	2681-134
SN55473	2682-38
SN55474	2682-5
SN55500	★ 541
SN55501	★ 541
SN64LS299	3790-10
SN7400	★ 920
	621-161
	¶ 290-2
SN7401	★ 920
	621-96
SN7402	★ 920
	624-56
SN7403	★ 921
	621-97
SN7404	★ 921
	607-56
SN7405	★ 921
	606-129
SN7406	★ 922
	614-79
SN7407	★ 922
	614-56
SN7408	★ 922
	619-90
SN7409	★ 923
	619-51
SN7410	★ 923
	620-135
SN74100	★ 955
	625-72
SN74107	★ 957
	617-117
SN74109	★ 958
	617-49
SN74109A	★ 958
	2671-8
SN74110	★ 958
	617-4
SN74111	★ 959
	617-154
SN74116	★ 960
	625-69
SN7412	★ 924
	620-103
SN74120	★ 961
	637-107
SN74121	★ 961
	630-106
SN74122	★ 961
	630-126
SN74123	★ 962
	630-169
SN74125	★ 963
	605-172
SN74126	★ 963
	605-146
SN74128	★ 964
	614-28
	★ 964
	2671-24
SN7413	★ 924
	637-137
SN74132	★ 965
	638-26
SN74136	★ 966
	624-133
SN7414	★ 924
	638-61
SN74141	2662-93
SN74142	611-155
SN74143	★ 970
	611-157
SN74144	★ 970
	611-159
SN74145	★ 970
	612-58
SN74147	★ 970
	639-118
SN74148	★ 971
	639-41
SN74150	★ 971
	630-85
SN74151A	★ 972
	629-156
SN74152A	★ 972
	630-12
SN74153	★ 972
	628-39
SN74154	★ 973
	613-123
SN74155	★ 974
	613-20
SN74156	★ 974
	612-172
SN74157	★ 975
	629-17
SN74159	★ 976
	613-131
SN74160	★ 925
	614-69
SN74160	★ 977
	610-39
	¶ 254-11
SN74161	★ 977
	608-7
	¶ 254-11
SN74162	★ 978
	610-79
	¶ 254-11
SN74163	★ 978
	608-52
	¶ 254-11
SN74164	★ 979
	632-32
	★ 979
	3790-103
SN74165	★ 979
	632-85
	★ 979
	3790-35
SN74166	★ 979
	632-105
	★ 979
	3790-50
SN74167	★ 980
	637-82
SN7417	★ 925
	614-46
SN74170	★ 981
	627-13
	★ 981
	3770-40
SN74172	★ 982
	627-41
	★ 982
	3770-62
SN74173	★ 982
	615-133
SN74174	★ 983
	615-157
SN74175	★ 983
	615-47
SN74176	★ 984
	610-2
SN74177	★ 984
	607-146
SN74178	★ 984
	631-117
	★ 984
	3788-94
SN74179	★ 985
	631-127
	★ 985
	3788-95
SN74180	★ 985
	639-80
SN74181	★ 985
	604-26
SN74182	★ 986
	604-81
	¶ 323-19
SN74184	★ 987
	637-104
	★ 987
	3756-13
SN74185A	★ 988
	637-97
	★ 988
	3756-2
SN74186	3760-60
SN74187	3783-5
SN74188A	3760-49
SN74190	★ 989
	611-80
SN74191	★ 989
	609-39
SN74192	★ 990
	611-44
SN74193	★ 990
	609-92
SN74194	★ 990
	631-159
	★ 990
	3788-96
SN74195	★ 991
	631-57
	★ 991
	3789-12
SN74196	★ 991
	610-3
SN74197	★ 992
	607-147
SN74198	★ 992
	632-62
	★ 992
	3789-122
SN74199	★ 993
	632-72
	★ 993
	3789-123
SN7420	★ 926
	620-48
SN7422	★ 927
	620-5
SN74221	★ 994
	630-144
SN7423	★ 927
	623-151
SN74246	★ 1001
	2662-31
SN74247	★ 1001
	2662-15
SN74248	★ 1002
	2661-139
SN74249	★ 1002
	2661-106
SN7425	★ 928
	623-143
SN74251	★ 1003
	630-35
SN74259	★ 1005
	626-22
SN7426	★ 928
	614-4
SN74265	★ 1007
	638-12
SN7427	★ 929
	623-182
SN74273	★ 1007
	616-64
SN74276	★ 1008
	618-113
SN74278	★ 1009
	638-136
SN74279	★ 1009
	625-136
SN7428	★ 929
	624-57
SN74283	605-83
	¶ 323-19
SN74284	★ 1011
	604-124
	¶ 323-19
SN74285	★ 1011
	604-121
	¶ 323-19
SN74290	★ 1012
	609-139
SN74293	★ 1014
	608-117
SN74298	★ 1015
	629-67
SN7430	★ 929
	622-29
SN7432	★ 930
	623-86
SN7433	★ 930
	624-24
SN74351	★ 1020
	628-77
SN74365A	★ 1023
	606-38
SN74366A	★ 1023
	606-180
SN74367A	★ 1024
	606-39
	614-98
SN74368A	★ 1024
	606-181
SN7437	★ 932
	621-48
SN74376	★ 1027
	618-111
SN7438	★ 932
	620-193
SN7439	★ 932
	620-194
SN74390	★ 1031
	610-125
SN74393	★ 1031
	608-83
SN7440	★ 933
	619-158
SN74425	★ 1034
	605-173
SN74426	★ 1034
	605-147
SN7442A	★ 933
	612-92
SN7443A	★ 934
	612-18
SN7444A	★ 934
	612-11
SN7445	★ 934
	612-48
SN7446A	★ 935
	2662-32
SN7447A	★ 935
	2662-16
SN7448	★ 935
	2661-140
SN7449	★ 935
	2661-107
SN74490	★ 1043
	610-126
SN7450	★ 936
	622-107
SN7451	622-126
SN745175	★ 983
SN7453	★ 937
	623-38
SN7454	★ 938
	623-28
SN7460	★ 940
	622-166
SN7470	★ 943
	617-2
SN7472	★ 944
	617-14
SN7473	★ 944
	617-118
SN7474	614-162
SN7475	★ 946
	625-92
SN7476	★ 946
	617-166
SN7480	★ 948
	603-163
SN7481A	★ 948
	627-2
	★ 948
	3770-63
SN7482	★ 948
	604-10
SN7483A	★ 949
	605-84
SN7484A	★ 949
	627-4
	★ 949
	3770-64
SN7485	★ 950
	603-70
SN7486	★ 950
	624-168
SN7488A	3783-1
SN7489	★ 951
	627-61
	★ 951
	3771-35
SN7490A	★ 952
	609-140
SN7491A	★ 952
	632-146
	★ 952
	3790-125
SN7492A	★ 952
	611-122
SN7493A	★ 953
	608-118
SN7494	★ 953
	631-147
	★ 953
	3789-65
SN7495A	★ 954
	631-94
	★ 954
	3788-97
SN7496	★ 954
	632-9
	★ 954
	3789-93
SN7497	★ 954
	638-160
SN74ALS00	621-169
SN74ALS00A	★ 920
SN74ALS01	★ 920
	621-107
SN74ALS02	★ 920
	624-67
SN74ALS03	★ 921
	621-108
SN74ALS04	★ 921
	607-63
SN74ALS05	★ 921
	606-134
SN74ALS08	★ 922
	619-102
SN74ALS09	★ 923
	619-56
SN74ALS10	★ 923
	620-140
SN74ALS1000	★ 1114
	621-170
SN74ALS1002	★ 1114
	624-68
SN74ALS1003	★ 1115
	621-109
SN74ALS1004	★ 1115
	607-64
SN74ALS1005	★ 1115
	606-135
SN74ALS1008	★ 1116
	619-103
SN74ALS1010	★ 1116
	620-141
SN74ALS1011	★ 1116
	619-4
SN74ALS1020	★ 1117
	620-54
SN74ALS1032	★ 1117
	623-93
SN74ALS1034	★ 1118
	606-43
SN74ALS1035	★ 1118
	606-23
SN74ALS109	★ 958
	617-56
SN74ALS11	★ 923
	619-5
SN74ALS112	★ 959
	618-44
SN74ALS113	★ 959
	618-5
SN74ALS114	★ 960
	618-81
SN74ALS12	★ 924
	620-107
SN74ALS1240	★ 1119
	633-153
SN74ALS1241	★ 1119
	634-24
SN74ALS1242	★ 1119
	633-77
SN74ALS1243	★ 1120
	633-78
SN74ALS1244	★ 1120
	634-76
SN74ALS1245	★ 1120
	635-83
SN74ALS131	★ 964
	613-102
SN74ALS133	★ 965
	622-72
SN74ALS137	★ 967
	613-91
SN74ALS138	★ 968
	613-47
SN74ALS139	★ 968
	612-128
SN74ALS15	★ 925
	618-151
SN74ALS151	629-160
SN74ALS153	★ 972
	628-43
SN74ALS157	★ 975
	629-21
SN74ALS158	★ 975
	628-130
SN74ALS160	★ 977
	610-45
SN74ALS161	★ 977
	608-13
SN74ALS1616	★ 1121
	605-28
SN74ALS162	★ 978
	610-93
SN74ALS1620	★ 1122
	636-66
SN74ALS1620-1	★ 1122
	636-67
SN74ALS1621	★ 1122
	636-34
SN74ALS1621-1	★ 1122
	636-35
SN74ALS1622	★ 1122
	636-36
SN74ALS1622-1	★ 1122
	636-37
SN74ALS1623	★ 1122
	636-68
SN74ALS1623-1	★ 1122
	636-69
SN74ALS163	★ 978
	608-58
SN74ALS1638	★ 1123
	634-129
SN74ALS1638-1	★ 1123
	634-130
SN74ALS1639	★ 1123
	634-131
SN74ALS1639-1	★ 1123
	634-132
SN74ALS164	★ 979
	632-36
SN74ALS1640	★ 1124
	635-1
SN74ALS1640-1	★ 1124
	635-2
SN74ALS1641	★ 1124
	635-55
SN74ALS1641-1	★ 1124
	635-56
SN74ALS1642	★ 1124
	634-145
SN74ALS1642-1	★ 1124
	634-146
SN74ALS1643	★ 1124
	635-3
SN74ALS1643-1	★ 1124
	635-4
SN74ALS1644	★ 1124
	635-140
SN74ALS1644-1	★ 1124
	635-141
SN74ALS1645	★ 1124
	635-84
	★ 1124
	2678-27
SN74ALS1645-1	★ 1124
	635-85
SN74ALS165	★ 979
	632-87
SN74ALS166	★ 979
	632-107
SN74ALS168	★ 980
	610-188
SN74ALS169	★ 980
	608-184
SN74ALS16R4-1	4480-54
SN74ALS174	★ 983
	615-161
SN74ALS175	★ 983
	615-49
SN74ALS190	★ 989
	611-84
SN74ALS191	★ 989
	609-50
SN74ALS192	★ 990
	611-48

Arranged alphanumerically from left to right.

© IC MASTER 1984

Texas Instruments (Cont'd)

Device	Page-Line
SN74ALS193	★ 990 609-96
SN74ALS194	★ 990 631-161
SN74ALS20	★ 926 620-55
SN74ALS21	★ 927 618-124
SN74ALS22	★ 927 620-9
SN74ALS240	★ 998 633-154
	★ 998 2670-12
SN74ALS241	★ 999 634-25
	★ 999 2669-47
SN74ALS242	★ 999 633-79
	★ 999 2675-62
SN74ALS243	★ 1000 633-80
	★ 1000 2675-63
SN74ALS244	★ 1000 634-77
	★ 1000 2669-48
SN74ALS245	★ 1001 635-86
	★ 1001 2678-28
SN74ALS251	★ 1003 630-39
SN74ALS253	★ 1003 627-168
SN74ALS257	★ 1004 628-166
SN74ALS258	★ 1005 628-91
SN74ALS259	★ 1005 626-24
SN74ALS27	★ 929 624-3
SN74ALS273	★ 1007 616-70
SN74ALS28	★ 929 624-69
SN74ALS299	★ 1016 632-163
SN74ALS30	★ 929 622-31
SN74ALS32	★ 930 623-94
SN74ALS323	★ 1018 632-164
SN74ALS33	★ 930 624-28
SN74ALS34	★ 931 606-17
SN74ALS35	★ 931 606-21
SN74ALS352	★ 1020 627-142
SN74ALS353	★ 1021 627-109
SN74ALS365	★ 1023 606-44
SN74ALS366	★ 1023 614-100
SN74ALS366-1	★ 1023 614-101
SN74ALS367	★ 1024 606-45
SN74ALS368	★ 1024 607-2
SN74ALS37	★ 932 621-52
SN74ALS373	★ 1025 626-50
SN74ALS374	★ 1026 616-105
SN74ALS38	★ 932 620-198
SN74ALS40	★ 933 619-162
SN74ALS465	★ 1040 606-97
SN74ALS466	★ 1040 607-110
SN74ALS467	★ 1040 606-98
SN74ALS468	★ 1040 607-111
SN74ALS518	★ 1044 603-107
SN74ALS519	★ 1044 603-108
	★ 1044
SN74ALS520	★ 1044 603-91
SN74ALS521	★ 1044 603-92
SN74ALS522	★ 1044 603-93
SN74ALS526	★ 1045 4482-54
	★ 1045 603-152
	636-89
SN74ALS527	★ 1045 4482-56
	★ 1045 603-103
SN74ALS528	★ 1046 4482-52
	★ 1046 603-150
SN74ALS533	★ 1047 626-113
SN74ALS534	★ 1047 616-42
SN74ALS538	★ 1048 613-48
SN74ALS539	★ 1049 612-123
SN74ALS540	★ 1050 633-149
	★ 1050 2670-13
SN74ALS541	★ 1050 634-26
	★ 1050 2669-49
SN74ALS560	★ 1051 610-157
SN74ALS561	★ 1051 608-152
SN74ALS563	★ 1052 626-114
SN74ALS564	★ 1052 616-43
SN74ALS568	★ 1053 610-178
SN74ALS569	★ 1053 609-73
SN74ALS573	★ 1054 626-51
SN74ALS574	★ 1054 616-106
SN74ALS575	★ 1054 616-107
SN74ALS576	★ 1055 616-44
SN74ALS577	★ 1055 616-108
SN74ALS580	★ 1056 626-115
SN74ALS620	★ 1066 636-70
SN74ALS621	★ 1066 636-38
SN74ALS622	★ 1066 636-39
SN74ALS623	★ 1066 636-71
SN74ALS632	★ 374
	★ 1070 639-136
	¶ 264-8
	★ 374
	★ 1070 2665-55
	¶ 264-8
SN74ALS633	★ 374
	★ 1070 639-137
	¶ 264-8
	★ 374
	★ 1070 2665-56
	¶ 264-8
SN74ALS634	★ 374
	★ 1071 639-138
	¶ 264-8
	★ 374
	★ 1071 2665-57
	¶ 264-8
SN74ALS635	★ 374
	★ 1071 639-139
	¶ 264-8
	★ 374
	★ 1071 2665-58
	¶ 264-8
SN74ALS636	639-3
SN74ALS637	639-4
SN74ALS638	★ 1073 634-133
SN74ALS639	★ 1073 634-134
SN74ALS640	★ 1074 635-5
SN74ALS641	★ 1074 635-57
SN74ALS642	★ 1074 634-147
SN74ALS643	★ 1074 635-6
SN74ALS644	★ 1074 635-142
SN74ALS645	★ 1074 635-87
	★ 1074 2678-29
SN74ALS646	★ 1076 635-190
SN74ALS646-1	★ 1076 636-1
SN74ALS647	★ 1076 635-180
SN74ALS647-1	★ 1076 635-181
SN74ALS648	★ 1076 636-2
SN74ALS648-1	★ 1076 636-3
SN74ALS649	★ 1076 635-182
SN74ALS649-1	★ 1076 635-183
SN74ALS651	★ 1078 635-7
	636-4
SN74ALS651-1	★ 1078 636-5
SN74ALS652	★ 1078 635-8
	636-6
SN74ALS652-1	★ 1078 636-7
SN74ALS653	★ 1079 635-155
SN74ALS653-1	★ 1079 635-156
SN74ALS654	★ 1079 635-162
SN74ALS654-1	★ 1079 635-163
SN74ALS677	★ 1083 603-27
SN74ALS678	★ 1083 603-28
SN74ALS679	★ 1084 603-29
SN74ALS680	★ 1084 603-30
SN74ALS688	★ 1088 603-127
SN74ALS689	★ 1088 603-109
SN74ALS74	★ 945 614-169
SN74ALS8003	★ 1128 619-145
SN74ALS804	★ 1094 614-109
SN74ALS805	★ 1095 614-113
SN74ALS808	★ 1095 614-105
SN74ALS832	★ 1098 614-117
	623-129
SN74ALS857	★ 1102 633-135
SN74ALS86	★ 951 624-170
SN74ALS873	★ 1106 625-78
SN74ALS874	★ 1106 614-135
SN74ALS876	★ 1107 614-136
SN74ALS878	★ 1108 614-137
SN74ALS879	★ 1108 614-138
SN74ALS880	★ 1109 625-160
SN74AS00	★ 920 621-173
SN74AS02	★ 920 624-73
SN74AS04	★ 921 607-67
SN74AS08	★ 922 619-106
SN74AS10	★ 923 620-143
SN74AS1000	★ 1114 621-174
SN74AS1002	★ 1114 624-74
SN74AS1004	★ 1115 607-68
SN74AS1008	★ 1116 619-107
SN74AS1032	★ 1117 623-97
SN74AS1034	★ 1118 606-15
	606-47
SN74AS1036	★ 1118 614-17
	624-75
SN74AS109	★ 958 617-58
SN74AS11	★ 923 619-7
SN74AS112	★ 959 618-46
SN74AS113	★ 959 618-7
SN74AS114	★ 960 618-83
SN74AS1242	633-85
SN74AS1243	638-10
SN74AS131	★ 964 613-104
SN74AS137	★ 967 613-93
SN74AS138	★ 968 613-50
SN74AS139	★ 968 612-129
SN74AS150	★ 971 630-87
SN74AS151	★ 972 629-162
SN74AS153	628-45
SN74AS157	★ 975 629-23
SN74AS158	★ 975 628-132
SN74AS160	★ 977 610-47
SN74AS161	★ 977 608-15
SN74AS162	★ 978 610-95
SN74AS163	★ 978 608-60
SN74AS168	★ 980 611-2
SN74AS169	★ 980 608-186
SN74AS174	★ 983 615-163
SN74AS175	★ 983 615-51
SN74AS181A	★ 985 604-29
SN74AS182	★ 986 604-86
SN74AS194	★ 990 631-163
SN74AS195	★ 991 631-59
SN74AS20	★ 926 620-57
SN74AS21	★ 927 618-126
SN74AS230	★ 998 634-80
SN74AS231	★ 998 634-81
SN74AS240	★ 998 633-155
	★ 998 2670-14
SN74AS241	★ 999 634-29
	★ 999 2669-50
SN74AS242	★ 999 633-86
SN74AS243	★ 1000 633-87
SN74AS244	★ 1000 634-82
SN74AS245	★ 1001 635-90
	★ 1001 2678-30
SN74AS251	★ 1003 630-41
SN74AS253	★ 1003 627-170
SN74AS257	★ 1004
SN74AS258	★ 1005 628-93
SN74AS2620	★ 1126 635-41
SN74AS2623	★ 1126 635-47
	★ 1126
SN74AS264	★ 1006 604-87
SN74AS2640	★ 1127 635-42
SN74AS2643	635-44
SN74AS2645	★ 1127 635-48
SN74AS27	★ 929 624-5
SN74AS280	★ 1009 639-82
SN74AS282	★ 1010 604-88
SN74AS286	★ 1012 639-111
SN74AS298	★ 1015 629-69
SN74AS299	★ 1016 632-167
SN74AS30	★ 929 622-33
SN74AS32	★ 930 623-98
SN74AS323	★ 1018 632-168
SN74AS34	★ 931 606-19
SN74AS352	★ 1020 627-144
SN74AS353	★ 1021 627-110
SN74AS373	★ 1025 626-54
SN74AS374	★ 1026 616-113
SN74AS395	★ 1031 631-130
SN74AS533	★ 1047 626-118
SN74AS534	★ 1047 616-45
SN74AS573	★ 1054 626-55
SN74AS574	★ 1054 616-114
SN74AS575	★ 1054 616-115
SN74AS576	★ 1055 616-47
SN74AS577	★ 1055 616-116
SN74AS580	★ 1056 626-119
SN74AS620	★ 1066 636-74
SN74AS621	★ 1066 636-42
SN74AS622	★ 1066 636-43
SN74AS623	★ 1066 636-75
SN74AS638	★ 1073 634-137
SN74AS639	★ 1073 634-138
SN74AS640	★ 1074 635-13
SN74AS641	★ 1074 635-59
SN74AS642	★ 1074 634-149
SN74AS643	★ 1074 635-14
SN74AS644	★ 1074 635-144
SN74AS645	★ 1074 635-91
SN74AS646	★ 1076 636-10
SN74AS648	★ 1076 636-11
SN74AS651	★ 1078 635-15
SN74AS652	★ 1078 635-16
SN74AS74	★ 945 614-171
SN74AS756	★ 1091 633-139
SN74AS757	★ 1091 634-12
SN74AS758	★ 1092 633-63
SN74AS759	★ 1092 633-64
SN74AS760	★ 1092 634-113
SN74AS762	★ 1093 634-114
SN74AS763	★ 1093 634-110
SN74AS800	★ 1093 613-143
SN74AS802	★ 1094 613-145
SN74AS804	622-18
SN74AS804A	★ 1094 614-111
SN74AS805	624-119
SN74AS805A	★ 1095 614-115
SN74AS808	619-143
SN74AS808A	★ 1095 614-107
SN74AS821	★ 1096 616-181
SN74AS822	★ 1096 616-179
SN74AS823	★ 1096 616-177
SN74AS824	★ 1097 616-175
SN74AS825	★ 1097 616-173
SN74AS826	★ 1097 616-171
SN74AS832	623-131
SN74AS832A	★ 1098 614-119
SN74AS841	★ 1098 626-153

¶ Indicates page number in Application Note Directory.
★ Indicates additional data is provided on the page noted.

IC MASTER

Texas Instruments (Cont'd)

Device	Page-Line
SN74AS842	★ 1098 626-151
SN74AS843	★ 1099 626-147
SN74AS844	★ 1099 626-145
SN74AS845	★ 1099 626-139
SN74AS846	★ 1100 626-101
SN74AS850	★ 1100 630-72
SN74AS851	★ 1100 630-73
SN74AS852	★ 1101 636-100
SN74AS856	★ 1101 636-101
SN74AS857	★ 1102 633-137
SN74AS866	★ 1103 605-127
SN74AS867	★ 1103 608-172
SN74AS869	★ 1103 608-173
SN74AS870	★ 1104 626-163
SN74AS871	★ 1105 626-164
SN74AS873	★ 1106 625-80
SN74AS874	★ 1106 614-143
SN74AS876	★ 1107 614-144
SN74AS877	★ 1107 639-26
SN74AS878	★ 1108 614-145
SN74AS879	★ 1108 614-146
SN74AS880	★ 1109 625-162
SN74AS881A	★ 1109 604-30
SN74AS882	★ 1110 604-89
SN74AS885	★ 1110 603-129
SN74AS888	★ 1111 ★ 1129 1337-75
SN74AS889	★ 1111 ★ 1129 1337-76
SN74AS890	★ 1112 ★ 1142 1337-79
SN74AS891	★ 1112 ★ 1142
SN74AS894	605-46
SN74AS897	★ 1113 603-22
SN74AS95	★ 954 631-96
SN74H00	★ 920 621-188
SN74H01	★ 920 621-115
SN74H04	★ 921 607-80
SN74H05	★ 921 606-141
SN74H10	★ 923 620-153
SN74H101	★ 956 617-39
SN74H102	★ 956 617-35
SN74H103	★ 956 618-42
SN74H106	★ 957 618-57
SN74H108	★ 958 618-2
SN74H11	★ 923 619-18
SN74H15	★ 925 618-153
SN74H183	★ 986 603-174 ¶ 323-19
SN74H20	★ 926 620-69
SN74H21	★ 927 618-132
SN74H22	★ 927 620-15
SN74H30	★ 929 622-39
SN74H40	★ 933 619-170
SN74H50	★ 936 622-113
SN74H51	★ 936 622-134
SN74H52	★ 937 622-94
SN74H53	★ 937 623-17
SN74H54	★ 938 623-10
SN74H55	★ 939 623-2
SN74H60	★ 940 637-165
SN74H61	★ 940 638-7
SN74H62	★ 941 638-88
SN74H71	★ 943 617-31
SN74H72	★ 944 617-21
SN74H73	★ 944 617-128
SN74H74	★ 945 615-10
SN74H76	★ 946 617-171
SN74H78	★ 947 617-85
SN74H87	★ 951 638-154
SN74HC00	583-119
SN74HC02	585-79
SN74HC04	574-32
SN74HC08	582-155
SN74HC10	583-59
SN74HC107	581-199
SN74HC109	582-54
SN74HC11	582-113
SN74HC113	581-149
SN74HC132	593-115
SN74HC133	583-167
SN74HC137	579-17
SN74HC138	578-183
SN74HC139	578-134
SN74HC14	593-156
SN74HC151	588-181
SN74HC154	579-88
SN74HC157	588-99
SN74HC158	588-118
SN74HC160	576-125
SN74HC162	576-86
SN74HC164	591-112
SN74HC165	591-87
SN74HC173	580-122
SN74HC174	580-185
SN74HC175	580-151
SN74HC192	576-177
SN74HC194	590-116
SN74HC195	590-147
SN74HC20	583-10
SN74HC221	589-163
SN74HC245	594-160
SN74HC259	587-78
SN74HC266	585-190
SN74HC27	585-25
SN74HC273	581-12
SN74HC299	591-160
SN74HC30	583-154
SN74HC32	584-114
SN74HC365	573-79
SN74HC366	573-25
SN74HC368	573-26
SN74HC374	581-126
SN74HC390	577-46
SN74HC393	575-24
SN74HC4017	576-48
SN74HC4060	575-182
SN74HC4075	584-74
SN74HC42	578-63
SN74HC423	589-164
SN74HC533	587-29
SN74HC534	581-61
SN74HC563	587-30
SN74HC573	586-179
SN74HC574	581-127
SN74HC595	591-123
SN74HC597	591-95
SN74HC645	594-161
SN74HC646	594-101
SN74HC648	594-87
SN74HC688	571-144
SN74HC73	581-200
SN74HC74	580-83
SN74HC75	586-80
SN74HC76	582-55
SN74HC77	586-39
SN74HC85	571-135
SN74HC86	585-165
SN74L164	3790-80
SN74L47	2662-17
SN74L91	3790-110
SN74L95	3788-42
SN74L99	3788-43
SN74LS00	★ 920 622-7
SN74LS01	★ 920 621-138
SN74LS02	★ 920 624-105
SN74LS03	★ 921 621-139
SN74LS04	★ 921 607-95
SN74LS05	★ 921 606-156
SN74LS08	★ 922 619-133
SN74LS09	★ 923 619-74
SN74LS10	★ 923 620-168
SN74LS104	636-144
SN74LS105	636-145
SN74LS107A	★ 957 617-151
SN74LS109A	★ 958 617-78
SN74LS11	★ 923 619-32
SN74LS112A	★ 959 618-70
SN74LS113A	★ 959 618-27
SN74LS114A	★ 960 618-103
SN74LS12	★ 924 620-118
SN74LS122	★ 961 630-135
SN74LS123	★ 962 630-179 ¶ 259-9
SN74LS124	637-111 3215-40
SN74LS125A	★ 962 606-13
SN74LS126A	★ 962 605-160
SN74LS13	★ 924 637-158
SN74LS132	★ 965 638-44
SN74LS136	★ 966 624-148
SN74LS137	★ 967 613-97
SN74LS138	★ 968 613-71 ★ 968 1345-114
SN74LS139	★ 968 612-151
SN74LS14	★ 924 638-60
SN74LS145	★ 970 612-65
SN74LS147	★ 970 639-122
SN74LS148	★ 971 639-56 ★ 971 1350-9
SN74LS15	★ 925 618-167
SN74LS151	★ 972 629-182
SN74LS152A	★ 972 630-18
SN74LS153	★ 972 628-66
SN74LS155	★ 974 613-34
SN74LS156	★ 974 613-3
SN74LS157	★ 975 629-45
SN74LS158	★ 975 628-153
SN74LS160A	★ 977 610-66
SN74LS161A	★ 977 608-34
SN74LS162A	★ 978 610-116
SN74LS163A	★ 978 608-78
SN74LS164	★ 979 632-55 ★ 979 3790-104
SN74LS165	★ 979 632-94 ★ 979 3790-51
SN74LS166	★ 979 632-114 ★ 979 3790-52
SN74LS169A	609-22
SN74LS169B	609-23
SN74LS170	★ 981 627-26 ★ 981 3770-41
SN74LS171	★ 981 615-95
SN74LS173A	★ 982 615-144
SN74LS174	★ 983 615-184
SN74LS175	★ 983 615-71
SN74LS18	★ 926 637-159
SN74LS181	★ 985 604-59
SN74LS183	★ 986 604-3
SN74LS189A	★ 988 3771-32
SN74LS19	★ 926 638-81
SN74LS190	★ 989 611-104
SN74LS191	★ 989 609-69
SN74LS192	★ 990 611-70
SN74LS193	★ 990 609-116
SN74LS194A	★ 990 631-180 ★ 990 3788-98
SN74LS195A	★ 991 631-72 ★ 991 3789-13
SN74LS196	★ 991 610-14
SN74LS197	★ 992 607-161
SN74LS20	★ 926 620-85
SN74LS21	★ 927 618-147
SN74LS211	3771-55
SN74LS212	3771-56
SN74LS213	3771-58
SN74LS214	3774-105
SN74LS215	3774-86
SN74LS216	3771-91
SN74LS217	3771-92
SN74LS218	3771-63
SN74LS219A	★ 994 3771-33
SN74LS22	★ 927 620-28
SN74LS221	★ 994 630-153
SN74LS222	★ 995 3757-8
SN74LS224	★ 995 3757-9
SN74LS227	★ 997 3757-12
SN74LS228	★ 997 3757-13
SN74LS24	★ 928 638-45
SN74LS240	633-181 2670-15
SN74LS241	634-61 2669-51
SN74LS242	633-120 2675-64
SN74LS243	633-121 2675-65
SN74LS244	634-102 2669-52
SN74LS245	635-131 2677-57
SN74LS247	★ 1001 2662-18
SN74LS248	★ 1002 2661-141
SN74LS249	★ 1002 2661-108
SN74LS251	★ 1003 630-61 ★ 1003 1349-143
SN74LS253	★ 1003 628-17
SN74LS257A	★ 1004 628-187
SN74LS258A	★ 1005 628-115
SN74LS259	★ 1005 626-39 ★ 1005 1349-130
SN74LS26	★ 928 621-32
SN74LS261	★ 1006 604-118
SN74LS266	★ 1007 625-47
SN74LS27	★ 929 624-20
SN74LS273	★ 1007 616-84
SN74LS275	★ 1008 605-123
SN74LS279	★ 1009 625-150
SN74LS28	★ 929 624-106
SN74LS280	★ 1009 639-94
SN74LS283	★ 1011 605-117
SN74LS289A	★ 1012 3771-27
SN74LS290	★ 1012 609-167
SN74LS292	★ 1013 612-3
SN74LS293	★ 1014 608-147
SN74LS294	★ 1014 612-1
SN74LS295B	★ 1014 631-40 ★ 1014 3789-14
SN74LS297	★ 1015 637-72 ¶ 258-13 ★ 1015 3214-33 ¶ 258-13
SN74LS298	★ 1015 629-106
SN74LS299	★ 1016 633-13
SN74LS30	★ 929 622-55
SN74LS31	★ 930 636-153
SN74LS311	3771-51
SN74LS312	3771-52
SN74LS314	3774-104
SN74LS315	3774-85
SN74LS316	3771-87
SN74LS317	3771-88
SN74LS318	3771-61
SN74LS319A	★ 1017 3771-28
SN74LS32	★ 930 623-119
SN74LS320	★ 1017 637-67
SN74LS321	★ 1017 637-68
SN74LS322A	★ 1018 605-136
SN74LS323	★ 1018 633-14 ★ 1018 3790-11
SN74LS324	637-89
SN74LS325	637-112 3215-41
SN74LS326	637-113 3215-42
SN74LS327	637-114 3215-43
SN74LS328	637-119 3215-44
SN74LS33	★ 930 624-39
SN74LS347	★ 1019 2661-151
SN74LS348	★ 1019 639-57 ★ 1019 1350-10
SN74LS352	★ 1020 627-162
SN74LS353	★ 1021 ★ 1022 627-128
SN74LS354	★ 1021 630-29
SN74LS355	630-25
SN74LS356	★ 1022 630-30
SN74LS357	★ 1023 630-26
SN74LS365A	★ 1023 606-80 ★ 1023 2670-20
SN74LS366A	★ 1023 607-33 ★ 1023 2670-24
SN74LS367A	★ 1024 606-81 ★ 1024 2670-21
SN74LS368A	★ 1024 607-34 ★ 1024 2670-25
SN74LS37	★ 932 621-68
SN74LS373	★ 1025 626-87
SN74LS374	★ 1026 616-138
SN74LS375	★ 1026 625-113
SN74LS377	★ 1027 616-165
SN74LS378	★ 1027 616-21

Arranged alphanumerically from left to right.

© IC MASTER 1984

Texas Instruments (Cont'd)

Device	Page-Line
SN74LS379	★ 1028 615-114
SN74LS38	★ 932 621-15
SN74LS381	★ 1028 604-60
SN74LS382	★ 1029 604-61
SN74LS384	★ 1029 605-20
SN74LS385	★ 1030 603-15
SN74LS386	★ 1030 625-11
SN74LS390	★ 1031 610-151
SN74LS393	★ 1031 608-98
SN74LS395A	★ 1031 631-140
	★ 1031 3789-15
SN74LS396	★ 1032 626-166
SN74LS398	★ 1032 629-107
SN74LS399	★ 1032 629-108
SN74LS40	★ 933 619-185
SN74LS42	★ 933 612-106
SN74LS422	★ 1033 630-119
SN74LS423	★ 1033 630-155
SN74LS424	1345-94
SN74LS440	★ 1035
	★ 1036 2675-13
SN74LS441	★ 1035
	★ 1036 2675-14
SN74LS442	★ 1035
	★ 1036 633-130
	★ 1035
	★ 1036 2675-16
SN74LS443	★ 1035
	★ 1036 633-131
	★ 1035
	★ 1036 2675-17
SN74LS444	★ 1035
	★ 1036 633-132
	★ 1035
	★ 1036 2675-18
SN74LS445	★ 1037 612-38
SN74LS446	★ 1038 2675-37
SN74LS447	★ 1038 2661-152
SN74LS448	★ 1039 633-133
	★ 1039 2675-15
SN74LS449	★ 1039 2675-38
SN74LS46	★ 935 2662-33
SN74LS462	637-6 1350-22
SN74LS463	637-7 1350-16
SN74LS465	★ 1040 606-113
SN74LS466	★ 1040 607-116
SN74LS467	★ 1040 606-114
SN74LS468	★ 1040 607-117
SN74LS47	★ 935 2662-19
SN74LS48	★ 935 2661-142
SN74LS481	★ 1041 1337-62
	★ 1041 1257-13
SN74LS49	★ 935 2661-109
SN74LS490	★ 1043 610-152
SN74LS51	★ 936 622-148
SN74LS54	★ 938 623-52
SN74LS540	★ 1050 634-1
	★ 1050 2670-16
SN74LS541	★ 1050 634-62
	★ 1050 2669-53
SN74LS55	★ 939 622-182
SN74LS56	★ 939 639-144
SN74LS57	★ 940 639-146
SN74LS590	★ 1056 608-161
SN74LS591	★ 1056 608-162
SN74LS592	★ 1057 608-157
SN74LS593	★ 1057 611-171
SN74LS594	★ 1058 632-131
SN74LS595	★ 1058 632-132
SN74LS596	★ 1058 632-133
SN74LS597	★ 1059 632-119
SN74LS598	★ 1059 632-120
SN74LS599	★ 1060 632-134
SN74LS600	636-166
SN74LS600A	★ 1061 636-158
	¶ 323-6
SN74LS601	636-167
SN74LS601A	★ 1061 636-159
	¶ 323-6
SN74LS602	636-168
SN74LS602A	★ 1062 636-160
SN74LS603	636-169
SN74LS603A	★ 1062 636-161
SN74LS604	★ 1063 626-7
SN74LS605	★ 1063 626-8
SN74LS606	★ 1063 626-9
SN74LS607	★ 1063 626-10
SN74LS608	★ 1064 626-11
SN74LS610	★ 1065 637-37
	¶ 264-15
SN74LS611	★ 1065 637-38
	¶ 264-15
SN74LS612	★ 1065 637-39
	¶ 264-15
SN74LS613	★ 1065 637-40
	¶ 264-15
SN74LS620	★ 1066 2677-58
SN74LS621	★ 1066 2677-44
SN74LS622	★ 1066 2677-45
SN74LS623	★ 1066 2677-59
SN74LS624	★ 1067 637-90
	★ 1067 3214-159
SN74LS625	★ 1067 637-120
	★ 1067 3215-45
SN74LS626	★ 1067 637-121
	★ 1067 3215-46
SN74LS627	★ 1068 637-122
	★ 1068 3215-47
SN74LS628	★ 1068 637-91
	★ 1068 3214-160
SN74LS629	★ 1068 637-123
	★ 1068 3215-48
SN74LS63	★ 941 638-51
SN74LS630	★ 1069 2665-59
	¶ 319-4
SN74LS631	★ 1069 2665-60
	¶ 319-4
SN74LS636	★ 1072
	★ 1153 637-4
	★ 1072
	★ 1153 2665-61
SN74LS637	★ 1072
	★ 1153 637-5
	★ 1072
	★ 1153 2665-62
SN74LS640	★ 1074 635-33
	★ 1074 2677-60
SN74LS640-1	★ 1074 635-34
	★ 1074 2677-61
SN74LS641	★ 1074 635-67
	★ 1074 2677-46
SN74LS641-1	★ 1074 635-68
	★ 1074 2677-47
SN74LS642	★ 1074 634-156
	★ 1074 2677-48
SN74LS642-1	★ 1074 634-157
	★ 1074 2677-49
SN74LS643	★ 1074 635-35
	★ 1074 2677-62
SN74LS643-1	★ 1074 635-36
	★ 1074 2677-63
SN74LS644	★ 1074 635-149
	★ 1074 2677-50
SN74LS644-1	★ 1074 635-150
	★ 1074 2677-51
SN74LS645	★ 1074 635-132
	★ 1074 2677-64
SN74LS645-1	★ 1074 635-133
	★ 1074 2677-65
SN74LS646	★ 1076 2678-31
SN74LS647	★ 1076 2678-11
SN74LS648	★ 1076 2678-32
SN74LS649	★ 1076 2678-12
SN74LS651	★ 1078 635-37 636-24
SN74LS652	★ 1078 635-38 636-25
SN74LS653	★ 1079 635-158
SN74LS654	★ 1079 635-165
SN74LS668	★ 1080 611-24
SN74LS669	★ 1080 609-24
SN74LS670	★ 1080 627-40
	★ 1080 3770-54
SN74LS671	★ 1081 631-28
SN74LS672	★ 1081 631-29
SN74LS673	★ 1082 633-60
SN74LS674	★ 1082 633-47
SN74LS68	★ 942 611-154
SN74LS681	★ 1085 605-41
SN74LS682	603-143
SN74LS683	★ 1086 603-122
SN74LS684	★ 1086 603-144
SN74LS685	★ 1086 603-123
SN74LS686	★ 1087 603-145
SN74LS687	★ 1087 603-124
SN74LS688	★ 1088 603-146
SN74LS689	★ 1088 603-125
SN74LS69	★ 942 611-152
SN74LS690	★ 1089 610-117
SN74LS691	★ 1089 607-174
SN74LS692	★ 1089 610-118
SN74LS693	★ 1089 607-175
SN74LS696	★ 1090 610-171
SN74LS697	★ 1090 608-166
SN74LS698	★ 1090 610-172
SN74LS699	★ 1090 608-167
SN74LS73A	★ 944 617-152
SN74LS74A	★ 945
	★ 946 615-26
SN74LS75	625-114
SN74LS76A	★ 946 617-182
SN74LS77	★ 947 625-124
SN74LS78A	★ 947 617-94
SN74LS83A	★ 949 605-118
SN74LS85	★ 950 603-71
SN74LS86	★ 950 625-12
SN74LS90	★ 952 609-168
SN74LS91	★ 952 632-154
	★ 952 3790-126
SN74LS92	★ 952 611-136
SN74LS93	★ 953 608-148
SN74LS95B	★ 954 631-110
	★ 954 3788-99
SN74LS96	★ 954 632-15
	★ 954 3789-95
SN74PL16L8-1	★ 4901
	★ 4910 4480-55
SN74PL16R4-1	★ 4901
	★ 4910 4480-56
SN74PL16R6-1	★ 4902
	★ 4910 4480-57
SN74PL16R8-1	★ 4902
	★ 4910 4480-58
SN74PL20L8	★ 4903
	★ 4914 4480-13
SN74PL20R4	★ 4903
	★ 4914 4480-14
SN74PL20R6	★ 4904
	★ 4914 4480-15
SN74PL20R8	★ 4904
	★ 4914 4480-16
SN74PL333	4482-94
SN74PL335	4482-92
SN74PL839	★ 4905
	★ 4918 4482-60
SN74PL840	★ 4905
	★ 4918 4482-58
SN74PLR19L8	★ 4906
	★ 4922 4480-17
SN74PLR19R4	★ 4906
	★ 4922 4480-18
SN74PLR19R6	★ 353
	★ 4907
	★ 4922 4480-19
SN74PLR19R8	★ 353
	★ 4907
	★ 4922 4480-20
SN74PLT19L8	★ 353
	★ 4908
	★ 4926 4480-21
SN74PLT19R4	★ 353
	★ 4908
	★ 4926 4480-22
SN74PLT19R6	★ 353
	★ 4909
	★ 4926 4480-23
SN74PLT19R8	★ 353
	★ 4909
	★ 4926 4480-24
SN74S00	★ 920 622-16
SN74S02	★ 920 624-115
SN74S03	★ 921 621-148
SN74S04	★ 921 607-105
SN74S05	★ 921 606-165
SN74S08	★ 922 619-141
SN74S09	★ 923 619-78
SN74S10	★ 923 620-177
SN74S11	★ 923 619-41
SN74S112	★ 959 618-79
SN74S113	★ 959 618-36
SN74S114	★ 960 618-109
SN74S124	★ 962 3215-49
SN74S132	★ 965 638-49
SN74S133	★ 965 622-88
SN74S134	★ 965 622-70
SN74S135	★ 966 624-128
SN74S138	★ 968 613-79
SN74S139	★ 968 612-160
SN74S140	★ 969 613-141
	★ 969 2670-50
SN74S15	★ 925 618-174
SN74S151	★ 972 630-2
SN74S153	★ 972 628-74
SN74S157	★ 975 629-54
SN74S158	★ 975 628-162
SN74S162	★ 978 610-122
SN74S163	★ 978 608-80
SN74S168	★ 980 611-26
SN74S169	★ 980 609-27
SN74S174	★ 983 615-193
SN74S175	615-80
SN74S181	★ 985 604-71
SN74S182	★ 986 604-106
SN74S189A	★ 988 3770-112
SN74S194	★ 990 631-186
	★ 990 3789-27
SN74S195	★ 991 631-80
	★ 991 3789-28
SN74S196	★ 991 610-18
SN74S197	★ 992 607-163
SN74S20	★ 926 620-94
SN74S201	★ 993 3772-45
SN74S207	3772-99
SN74S208	3772-100
SN74S214	3774-103
SN74S214A	3774-73
SN74S22	★ 927 620-35
SN74S225	★ 996 627-84
	★ 996 3757-14
	★ 996 1337-70
SN74S226	★ 996 638-134
	★ 996 2675-50
SN74S240	634-9 2670-17
SN74S241	634-69 2669-54

¶ Indicates page number in Application Note Directory.
★ Indicates additional data is provided on the page noted.

IC MASTER

Texas Instruments (Cont'd)

Device	Page-Line
SN74S251	★ **1003**
	630-69
SN74S253	★ **1003**
	628-25
SN74S257	★ **1004**
	628-195
SN74S258	★ **1005**
	628-124
SN74S260	★ **1006**
	623-170
SN74S270	3783-8
SN74S2708	3763-62
SN74S271	3783-6
SN74S274	★ **1008**
	604-126
SN74S275	★ **1008**
	605-125
SN74S280	★ **1009**
	639-107
SN74S281	★ **1010**
	605-44
SN74S283	★ **1011**
	605-120
SN74S289A	★ **1012**
	3770-105
SN74S299	★ **1016**
	633-18
	★ **1016**
	3790-13
SN74S30	★ **929**
	622-61
SN74S301	★ **1016**
	3772-43
SN74S314	3774-99
SN74S314A	3774-71
SN74S32	★ **930**
	623-127
SN74S330	4482-96
	1337-68
SN74S331	4482-95
	1337-69
SN74S340	634-10
SN74S341	634-70
SN74S344	634-108
SN74S37	★ **932**
	621-72
SN74S370	3783-9
SN74S371	3783-7
SN74S373	★ **1025**
	626-98
SN74S374	★ **1026**
	616-148
SN74S38	★ **932**
	621-19
SN74S381	★ **1028**
	604-72
SN74S40	★ **933**
	619-194
SN74S412	★ **1033**
	626-99
	★ **1033**
	1345-150
SN74S428	★ **1034**
	1346-3
SN74S436	★ **1035**
	★ **1036**
	614-86
	★ **1035**
	★ **1036**
	2683-88
SN74S437	★ **1035**
	★ **1036**
	614-87
	★ **1035**
	★ **1036**
	2683-89
SN74S438	★ **1034**
	1346-4
SN74S455	3764-14
SN74S481	★ **1041**
	605-63
	★ **1041**
	1337-63
	★ **1041**
	1257-14
SN74S482	★ **1042**
	637-56
	★ **1042**
	1337-65
SN74S484	★ **1043**
	3756-15
SN74S485	★ **1043**
	3756-11
SN74S51	★ **936**
	622-157
SN74S593	608-158
SN74S64	★ **941**
	623-67
SN74S65	623-75
SN74S74	615-34
SN74S740	634-117
SN74S744	634-71
SN74S85	★ **950**
	603-77
SN74S86	★ **950**
	625-20
SN75064	2682-79
SN75065	2682-121
SN75066	2682-80
SN75067	2682-122
SN75068	2682-81
SN75069	2682-123
SN75107A	2673-29
SN75107B	2673-43
SN75108A	2673-36
SN75108B	2673-48
SN75110A	2671-15
SN75112	2671-16
SN75113	2670-60
SN75114	2670-36
SN75115	2674-2
SN75116	2678-51
SN75117	2678-57
SN75118	2678-53
SN75119	2678-55
SN75121	2668-13
SN75122	2672-23
SN75123	2668-5
SN75124	2672-16
SN75125	2673-5
SN75126	2668-39
SN75127	2673-6
SN75128	2673-11
SN75129	2673-12
SN75130	2668-40
SN75136	638-100
	2676-12
SN75138	2676-62
SN75140	2672-8
SN75141	2672-9
SN75142A	2672-4
SN75143A	2672-5
SN75150	2668-22
SN75151	2671-44
SN75152	2674-13
SN75153	2671-45
SN75154	2672-59
SN75157	2673-56
SN75158	2670-38
SN75159	2671-3
SN75160A	2678-36
SN75161A	2678-37
SN75162A	2678-38
SN75163	2678-39
SN75172	2668-42
SN75173	2674-32
SN75174	2668-41
SN75175	2674-33
SN75176A	2678-47
SN75177	2678-48
SN75178	2678-49
SN75182	2674-8
SN75183	2670-51
SN75188	2668-57
SN75189	2672-33
SN75189A	2672-47
SN75207	2673-16
	2684-52
	¶ 290-2
SN75207B	2673-19
	¶ 290-2
SN75208	2673-17
	2684-53
SN75208B	2673-20
SN75234	2684-16
SN75270	636-136
	¶ 290-2
	2681-7
	¶ 290-2
SN75322	2681-29
SN75325	2680-76
SN75326	2680-85
SN75327	2680-86
SN75350	2682-65
SN75361A	2682-66
SN75363	2681-30
SN75365	2683-2
	¶ 321-17
SN75367	636-128
	2683-36
SN75369	2681-56
SN75401	2681-96
SN75402	2681-135
SN75403	2682-39
SN75404	2682-6
SN75407	2681-136
	2682-7
SN75408	2682-40
SN75411	2681-97
SN75412	2681-137
SN75413	2682-41
SN75414	2682-8
SN75416	2681-109
SN75417	2681-148
SN75418	2682-52
SN75419	2682-18
SN75426B	2662-96
SN75427B	2662-97
SN75430	2681-32
SN75431	2681-33
SN75432	2681-138
SN75433	2682-42
SN75434	2682-9
SN75436	2682-140
SN75437A	2682-141
SN75438	2682-142
SN75441	2681-39
	2682-48
SN75446	2681-108
SN75447	2681-139
SN75448	2682-43
SN75449	2682-10
SN75450B	2681-98
	¶ 290-2
SN75451B	2681-99
	¶ 290-2
SN75452B	2681-140
SN75453B	2682-44
SN75454B	2682-11
SN75460	2681-100
SN75461	2681-101
SN75462	2681-141
SN75463	2682-45
SN75464	2682-12
SN75465	3158-6
SN75466	2679-137
	3158-65
SN75467	2679-155
	3158-66
SN75468	2679-118
	3158-7
SN75469	2679-89
	3158-8
SN75470	2679-138
SN75471	2681-104
SN75472	2681-142
SN75473	2682-46
SN75474	2682-13
SN75476	2681-105
SN75477	2681-147
SN75478	2682-47
	2682-51
SN75479	2682-14
	2682-17
SN75480	2663-81
SN75490	2681-8
SN75491	2663-17
SN75491A	2663-18
SN75492	2663-56
SN75492A	2663-57
SN75494	2663-58
SN75497	2663-69
SN75498	2663-135
SN75500A	2664-18
SN75501C	2664-19
	¶ 287-15
SN75512A	2663-147
	¶ 287-15
SN75513A	2663-148
	¶ 287-15
SN75514	2663-149
SN75518	2664-20
SN75551	2661-38
SN75552	2661-36
SN75553	2661-37
SN75554	2661-35
SN75581	2663-71
SN75584A	2663-75
SN75590	2681-9
SN75603	3234-145
SN75604	3234-146
SN75AS153	★ **972**
SN76000	3164-127
SN76002	3164-128
SN76005	3165-13
SN76011	3164-129
SN76021	3164-130
SN76024	3164-131
SN76104	3168-161
SN76105	3168-162
SN76110	3168-163
SN76111	3168-164
SN76113	3168-165
SN76115	3168-166
SN76116	3168-167
SN76130	3165-174
SN76131	3165-175
SN76149	3165-176
SN76242	3171-13
SN76243	3171-14
SN76246	3171-15
SN76267	3171-16
SN76298	3171-17
SN76333	3233-76
SN76334	3233-77
SN76477	3173-18
	1354-49
SN76487	3165-192
SN76488	3165-193
	1354-50
SN76489	3165-187
SN76489A	3165-188
SN76493	3165-189
SN76494	3165-190
SN76495	3165-191
SN76524	3171-146
SN76525	3171-104
SN76544	3171-147
SN76545	3171-148
SN76565	3170-42
SN76566	3232-115
SN76600	3172-170
SN76605	3169-63
SN76606	3169-64
SN76635	3167-120
SN76642	3168-98
SN76643	3168-99
	3172-19
SN76644	3172-171
SN76645	3171-18
SN76650	3172-172
SN76651	3172-20
SN76660	3172-21
SN76665	3172-22
SN76666	3172-23
SN76669	3168-100
SN76675	3168-101
SN76676	3168-53
SN76678	3168-54
SN76688	3172-24
SN76689	3168-102
SN76701	3170-102
SN76702	3170-103
SN76710	3170-104
SN76711	3170-105
SN76720	3171-137
SN76721	3170-106
SN76727	3170-107
SN76730	3169-65
SN76810	3173-137
SN76811	641-119
SN76812	3220-7
SN76831	3169-66
SN76832A	★ **387**
	3169-67
	¶ 307-6
SN76881	★ **387**
	3169-7
	¶ 307-6
SN76882	★ **387**
	3169-8
	¶ 307-6
SN76889	3171-19
SN76891	★ **387**
	3169-9
	¶ 307-6
SN76940	3218-101
SN76LS682	★ **1086**
STL700	★ **538**
	4461-41
TAC020	4466-34
TAL002	★ **4887**
	4465-52
TAL004	★ **4887**
	4465-53
TAT004	★ **538**
	★ **4894**
	4463-12
TAT008	★ **538**
	★ **4894**
	4463-13
TAT010	4461-19
	4461-20
TAT020	4461-21
	4461-22
TBP18S030	★ **542**
	★ **4237**
	3760-33
TBP18S030M	★ **542**
	★ **4237**
	3760-47
TBP18SA030M	★ **542**
	★ **4237**
	3760-41
TBP18SA30	3760-31
TBP247A10M	3760-121
TBP24S10	★ **542**
	★ **4238**
	3760-99
TBP24S10M	★ **542**
	★ **4238**
	3760-113
TBP24S41	★ **542**
	★ **4239**
	3762-78
TBP24S41M	★ **542**
	★ **4239**
	3762-79
TBP24S81	★ **542**
	★ **4239**
	3764-17
TBP24S81M	★ **542**
	★ **4239**
	3764-18
TBP24S86M	3763-88
TBP24SA10	★ **542**
	★ **4238**
	3760-110
TBP24SA10M	★ **542**
	★ **4238**
	3760-111
TBP24SA41	★ **4239**
	3762-76
TBP24SA41M	★ **4239.**
	3762-77
TBP24SA81	★ **4240**
	3764-15
TBP24SA81M	★ **4240**
	3764-16
TBP28L166	★ **4243**
	3765-33
TBP28L22	★ **542**
	★ **4240**
	3761-16
TBP28L22M	★ **542**
	★ **4240**
	3761-21
TBP28L42	★ **542**
	★ **4241**
	3761-126
TBP28L45	3761-127
TBP28L46	★ **4242**
TBP28L85	3763-73
TBP28L86	★ **542**
	★ **543**
	★ **4242**
	3763-90
TBP28L86M	★ **542**
	★ **543**
	★ **4242**
	3763-91
TBP28LA22	★ **4240**
	3761-12
TBP28LA22M	★ **4240**
	3761-19
TBP28P166	3764-76
TBP28P42	3761-89
TBP28P45	3761-90
TBP28P85	3763-23
TBP28R165	3764-6
TBP28R166	3764-74
TBP28R45	3761-82
TBP28R85	3763-22
TBP28S165	★ **4247**
TBP28S166	★ **4247**
	3764-77
TBP28S2708	★ **4248**
	3763-89
TBP28S42	★ **542**
	★ **4244**
	3762-10
TBP28S42M	★ **542**
	★ **4244**
	3762-32
	3762-33
	3762-48
	3762-49
TBP28S45	3761-91
TBP28S46	★ **542**
	★ **543**
	★ **4245**
	3762-15
TBP28S46M	★ **542**
	★ **543**
	★ **4245**
	3762-39
TBP28S85	★ **4246**
	3763-24
TBP28S86-60	★ **542**
	★ **543**
	★ **4246**
	3763-63
TBP28SA166	3764-75
TBP28SA42	★ **4245**
	3762-18
TBP28SA42M	★ **4245**
	3762-45
TBP28SA46	★ **4245**
	3762-21
TBP28SA46M	★ **4245**
	3762-47
TBP28SA86-60	★ **4247**
	3763-64
TBP28SA86A-50	★ **4247**
	3764-113
TBP28SA86M	★ **4247**
	3763-85
TBP9989	★ **539**
TC101	3234-98
TC102	3234-89
TC103	3234-102
TC104	3234-107
TC201	3234-37
TC202	3234-38
TCM1101	3217-30
TCM1501A	3219-32
	¶ 299-1
TCM1506A	3219-33
	¶ 299-1
TCM1512A	3219-34
	¶ 299-1
TCM1513A	3219-35
TCM1520A	3218-60
	3219-36
	¶ 299-1
TCM1705A	3169-83
	3218-69
TCM1707	3218-96
TCM1708	3218-97
TCM2101	3218-41
TCM2102	3218-42
TCM2201	3217-117
TCM2202	3217-111
	3217-112
TCM2203	3217-113
	3217-115
TCM2204	3217-114
	3217-116
TCM2401	3217-64
TCM2910A	3216-122
TCM2911A	3216-56
TCM2912A	3217-85
TCM2912B	3217-102
TCM2913	3216-76
TCM2914	3216-77
TCM2916	3216-78
	3216-95

Arranged alphanumerically from left to right.

© IC MASTER 1984

Device	Page-Line
Texas Instruments (Cont'd)	
TCM2917	3216-63
	3216-79
TCM3101	3217-130
TCM4110	3216-123
TCM4204	3218-93
TCM4205	3218-94
TCM4207	3218-95
TCM4910	3216-124
TCM4913	3216-80
TCM4914	3216-81
TCM4916	3216-82
	3216-96
TCM4917	3216-64
	3216-83
TCM5087	3219-92
TCM5089	3219-93
TCM5091	3219-94
TCM5092	3219-95
TIB0203S	3791-105
TIED460	3233-78
TIED461	3233-79
TIED462	3233-80
TIED463	3233-81
TIM8228	1346-5
TIM8238	1346-6
TIM9904	1349-137
TIM9905	1349-144
TIM9906	1349-131
TIM9907	1350-8
TIM9908	1350-11
TL010	3232-116
TL022C	3207-19
TL022M	3207-6
TL030	3155-135
TL044C	3211-40
TL044M	3211-38
TL060AC	3198-4
	¶ 294-7
TL060C	3202-29
	¶ 294-7
TL060M	3198-5
	¶ 294-7
TL061 Series	¶ 295-6
TL061AC	3197-58
	¶ 295-6
TL061BC	3192-45
	¶ 295-6
TL061C	3202-27
	¶ 295-6
TL061M	3197-59
	¶ 295-6
TL062AC	3208-2
TL062BC	3205-50
TL062C	3209-42
TL062M	3208-3
TL064AC	3212-7
TL064BC	3210-47
TL064C	3213-32
TL064M	3213-4
TL066AC	3198-16
TL066BC	3192-46
TL066C	3202-28
TL066M	3198-2
TL070AC	3200-55
	¶ 294-7
TL070C	3200-56
	¶ 294-7
TL070M	3197-54
	¶ 294-7
TL071AC	3198-15
	¶ 295-6
TL071BC	3192-52
	¶ 295-6
TL071C	3200-57
	¶ 295-6
TL071M	3197-55
	¶ 295-6
TL072AC	3208-16
TL072BC	3209-26
TL072C	3209-25
TL072M	3208-1
TL074AC	3212-20
TL074BC	3210-49
TL074C	3213-19
TL074M	3212-4
TL075C	3201-2
	3213-20
TL075M	3197-53
TL080AC	3198-9
	3198-10
	¶ 294-7
TL080C	3202-32
	¶ 294-7
TL081	3202-26
	¶ 295-6
TL081AC	3197-57
	¶ 295-6
TL081BC	3192-44
	¶ 295-6
TL082AC	3208-9
TL082BC	3205-52
TL082C	3209-49
TL082M	3208-10
TL083AC	3208-11
TL083C	3209-50
TL083M	3208-12
TL084AC	3212-12
TL084BC	3210-48
TL084C	3213-36
TL084M	3212-13
TL085C	3213-37
TL087C	3186-15
	¶ 295-6
TL087M	3186-14
	¶ 295-6
TL088C	3192-48
TL088M	3192-49
TL091M	3200-21
	¶ 295-6
TL092M	3209-20
TL094M	3213-7
	3213-24
TL111	3159-5
TL117L	3228-104
TL136C	3212-54
TL1526	★ **541**
TL1527	★ **541**
TL170	641-87
TL172	641-88
TL172C	3234-27
TL173C	3234-28
TL182C	2616-47
~~TL182I~~	~~2616-40~~
TL182M	2616-26
TL185C	2620-86
TL185I	2620-87
TL185M	2620-85
TL188C	2618-82
TL188I	2618-83
TL188M	2618-64
TL191C	2619-49
TL191I	2619-50
TL191M	2619-48
TL287C	3204-25
TL287M	3204-26
TL288C	3205-53
TL288M	3205-54
TL291	★ **3687**
TL292	★ **3687**
TL294	★ **3687**
TL311	3160-44
	¶ 295-6
TL311A	3160-41
	¶ 295-6
TL311M	3160-36
	¶ 295-6
TL317	3228-57
TL321C	3180-35
	3209-7
TL321I	3196-27
TL321M	3180-36
	3196-28
TL322C	3209-30
TL322M	3209-19
TL331C	3160-14
TL331M	3160-13
TL336C	3163-45
TL336M	3163-46
TL376C	3235-19
TL430C	3228-42
TL431C	3228-94
TL431M	3228-95
TL441M	3155-132
TL442M	3232-74
TL493C	3231-5
TL494C	3231-6
TL494M	3231-7
TL495C	3231-8
TL496C	3235-160
TL497AC	3231-9
TL497AM	3231-10
TL505C	2637-25
TL506C	3161-53
TL506M	3161-1
TL507C	2625-21
TL514C	3161-12
TL514M	3160-48
TL520	2628-3
	3233-34
TL521	2628-19
TL522	2625-39
TL530	2627-37
TL531	2628-28
TL532	2627-38
TL533	2628-29
TL592	3156-124
TL593C	★ **541**
	3231-11
TL594C	★ **541**
	3231-12
TL594M	★ **541**
	3231-13
TL595C	3231-14
TL601C	2618-96
TL601I	2618-92
TL601M	2618-93
TL604C	2618-90
TL604I	2618-88
TL604M	2618-89
TL607C	2618-97
TL607I	2618-94
TL607M	2618-95
TL610C	2615-24
TL610I	2615-22
TL610M	2615-23
TL702C	3201-51
TL702M	3197-34
TL710C	3160-24
TL710M	3160-11
TL712	3236-46
TL721	3236-47
TL780-05C	3221-109
TL780-12C	3223-116
TL780-15C	3224-84
~~TL783C~~	~~3229-66~~
TL810C	3159-55
TL810M	3159-20
TL811C	3161-30
TL811M	3161-11
TL820C	3161-13
TL820M	3160-49
TLC251AC	★ **3689**
	3194-18
	3194-20
	3194-21
	3194-22
TLC251BC	★ **3689**
	3189-11
	3189-13
	3189-14
	3189-15
TLC251C	★ **3689**
	3200-23
	3200-25
	3200-26
	3200-27
TLC252	★ **3691**
TLC254	★ **3693**
TLC25L2	★ **3691**
TLC25L4	★ **3693**
TLC25M2	★ **3691**
TLC25M4	★ **3693**
TLC271AC	★ **541**
	★ **3687**
	★ **3689**
	3194-19
	3194-23
TLC271BC	★ **541**
	★ **3687**
	★ **3689**
	3189-12
	3189-16
TLC271C	★ **541**
	★ **3687**
	★ **3689**
	3200-24
	3200-28
TLC272	★ **541**
	★ **3691**
TLC274	★ **541**
	★ **3693**
TLC27L2	★ **3691**
TLC27L4	★ **3693**
TLC27M2	★ **3691**
TLC27M4	★ **3693**
TLC372	★ **541**
	★ **3695**
TLC374	★ **541**
	★ **3697**
TLC532	★ **541**
TLC533	★ **541**
TLC540	★ **541**
	★ **3103**
	2626-44
TLC541	★ **541**
	★ **3103**
	2628-12
TLC555C	★ **3699**
TM52150-4	3774-4
TM54016-15	3778-85
TM990/101	★ **2055**
	¶ 278-7
	¶ 278-13
	¶ 278-15
	¶ 278-16
	¶ 278-17
	¶ 279-1
TM990/1241	★ **2055**
	¶ 278-7
	¶ 278-13
	¶ 278-15
	¶ 278-16
	¶ 278-17
	¶ 279-1
TM990/1481	1967-9
	¶ 278-7
	¶ 278-13
	¶ 278-15
	¶ 278-16
	¶ 278-17
	¶ 279-1
TM990/201	★ **2055**
	¶ 278-7
	¶ 278-13
	¶ 278-15
	¶ 278-16
	¶ 278-17
	¶ 279-1
TM990/202	★ **2055**
	¶ 278-7
	¶ 278-13
	¶ 278-15
	¶ 278-16
	¶ 278-17
	¶ 279-1
TM990/203	★ **2055**
	¶ 278-7
	¶ 278-13
	¶ 278-15
	¶ 278-16
	¶ 278-17
	¶ 279-1
TM990/204	★ **2055**
	¶ 278-7
	¶ 278-13
	¶ 278-15
	¶ 278-16
	¶ 278-17
	¶ 279-1
TM990/303A	★ **2055**
	¶ 278-7
	¶ 278-13
	¶ 278-15
	¶ 278-16
	¶ 278-17
	¶ 279-1
TM990/307	★ **2055**
	¶ 278-7
	¶ 278-13
	¶ 278-15
	¶ 278-16
	¶ 278-17
	¶ 279-1
TM990/308	★ **2055**
	¶ 278-7
	¶ 278-13
	¶ 278-15
	¶ 278-16
	¶ 278-17
	¶ 279-1
TM990/309	★ **2055**
	¶ 278-7
	¶ 278-13
	¶ 278-15
	¶ 278-16
	¶ 278-17
	¶ 279-1
TM990/310	★ **2055**
	¶ 278-7
	¶ 278-13
	¶ 278-15
	¶ 278-16
	¶ 278-17
	¶ 279-1
TM990/311	★ **2055**
	¶ 278-7
	¶ 278-13
	¶ 278-15
	¶ 278-16
	¶ 278-17
	¶ 279-1
TM990/314	★ **2055**
	¶ 278-7
	¶ 278-13
	¶ 278-15
	¶ 278-16
	¶ 278-17
	¶ 279-1
TM990/315	★ **2055**
	¶ 278-7
	¶ 278-13
	¶ 278-15
	¶ 278-16
	¶ 278-17
	¶ 279-1
TM990/317	★ **2055**
	¶ 278-7
	¶ 278-13
	¶ 278-15
	¶ 278-16
	¶ 278-17
	¶ 279-1
TM990/56X	★ **2055**
	¶ 278-7
	¶ 278-13
	¶ 278-15
	¶ 278-16
	¶ 278-17
	¶ 279-1
TM9900/100MA	1965-27
TM9900/101MA	1965-28
TM9900/102	1965-29
TM9995	1349-114
TMAM9000	1817-17
TMAM9010	1817-18
TMAM9021	1817-19
TMAM9041	1817-20
TMDS3262210	★ **1931**
TMDS7062210	★ **1931**
TMDS9562210	★ **1931**
TMDS9962210	★ **1931**
TMS0117NLP	1339-15
TMS1000	★ **1708**
	1339-9
	¶ 263-3
	¶ 275-17
	★ **1708**
	1263-21
	¶ 263-3
	¶ 275-17
TMS1000C	★ **1708**
	★ **1709**
	1339-2
	¶ 263-3
	¶ 275-17
	★ **1708**
	★ **1709**
	1263-22
	¶ 263-3
	¶ 275-17
TMS1004C	1339-3
	1263-23
TMS1018	3166-26
	1339-16
	1354-114
TMS1020NLL	1339-26
TMS1022	3166-74
TMS1024	1339-18
TMS1025	1339-19
TMS1070	★ **1708**
	1339-10
	★ **1708**
	1263-24
TMS1070C	★ **1708**
	1339-4
	★ **1708**
	1263-25
TMS1100	★ **1708**
	1339-11
	★ **1708**
	1263-26
TMS1100C	★ **1708**
	1339-5
	★ **1708**
	1263-27
TMS1104C	★ **1709**
TMS1117	3220-9
TMS1117NLP	3220-10
TMS1121	1339-33
TMS1170	★ **1708**
	1263-28
TMS1200	★ **1708**
	1339-12
	★ **1708**
	1263-29
TMS1200C	★ **1708**
	★ **1709**
	1339-6
	★ **1708**
	★ **1709**
	1263-30
TMS1270	★ **1708**
	1339-13
	★ **1708**
	1265-1
TMS1270C	★ **1708**
	1339-7
	★ **1708**
	1265-2
TMS1300	★ **1708**
	1339-14
	★ **1708**
	1265-3
TMS1300C	★ **1708**
	1339-8
	★ **1708**
	1265-4
TMS1304C	★ **1709**
TMS1370	★ **1708**
	1265-5
TMS1400	★ **1708**
	1265-6
TMS1470	★ **1708**
	1265-7
TMS1600	★ **1708**
	1265-8
TMS1670	★ **1708**
	1265-9
TMS1700	★ **1708**
	1265-10
TMS1730	★ **1708**
TMS1751	★ **1709**
TMS1976	3173-114
	1339-17
TMS2100	★ **1709**
	1339-36
	★ **1709**
	1265-11
TMS2114-15	3776-39
TMS2114-20	3776-75
TMS2114-25	3776-97
TMS2114-45	3777-38
TMS2114L-15	3776-40
TMS2114L-20	3776-76
TMS2114L-25	3776-98
TMS2114L-45	3777-39
TMS2132	1338-2
	1265-12
TMS2150-4	★ **4222**
	3232-96
TMS2150-5	★ **4222**
	3232-97
	★ **4222**
	3774-5
TMS2150-7	★ **4222**
	3232-98
	★ **4222**
	3774-6

¶ Indicates page number in Application Note Directory.
★ Indicates additional data is provided on the page noted.

IC MASTER

Texas Instruments (Cont'd)

Device	Page-Line
TMS2150-9	★ 4222
	3232-99
	★ 4222
	3774-7
TMS2170	★ 1709
	1339-37
	★ 1709
	1265-13
TMS2220	★ 1709
	1339-35
	★ 1709
	1265-14
TMS2240	★ 1709
	1338-1
	1339-38
	★ 1709
	1265-15
TMS2300	★ 1709
	1339-39
	★ 1709
	1265-16
TMS2370	★ 1709
	1339-40
	★ 1709
	1265-17
TMS2400	★ 1709
	1339-41
	★ 1709
	1265-18
TMS2470	★ 1709
	1339-42
	★ 1709
	1265-19
TMS2516-35	★ 543
	★ 4232
	3784-20
	¶ 324-1
TMS2516-45	★ 543
	★ 4232
	3784-42
	¶ 324-1
TMS2532-30	★ 543
	★ 4231
	3784-95
	¶ 319-11
	¶ 324-1
TMS2532-35	★ 543
	★ 4231
	3784-121
	¶ 319-11
	¶ 324-1
TMS2532-45	★ 543
	★ 4231
	3785-27
	¶ 319-11
	¶ 324-1
TMS2564-35	★ 543
	★ 4229
	3766-105
	3785-43
TMS2564-45	★ 543
	★ 4229
	3766-117
	3785-45
TMS2564-50	★ 543
	★ 4229
	3766-118
TMS25L32	★ 543
TMS2600	★ 1709
	1339-43
	★ 1709
	1265-20
TMS2670	★ 1709
	1339-44
	★ 1709
	1265-21
TMS2708-35	★ 543
	★ 4234
	3763-118
	3783-59
TMS2708-45	★ 543
	★ 4234
	3764-3
	3783-65
TMS27128-20	★ 4227
	3786-122
TMS27128-25	★ 4227
	3787-9
TMS27128-30	★ 4227
	3787-25
TMS27128-45	★ 4227
	3787-38
TMS2716-30	★ 4233
	3765-47
TMS2716-45	★ 4233
	3765-84
TMS2732A-30	★ 4230
	3784-96
TMS2732A-35	★ 4230
	3784-122
TMS2732A-45	★ 4230
	3785-28
TMS2732NLL	★ 4230
	1339-34
TMS2764H-20	★ 4228
	3785-69
TMS2764H-25	★ 4228
	3785-108
TMS2764H-30	★ 4228
	3786-29
TMS2764H-45	★ 4228
	3786-98
TMS27L08-45	★ 543
	★ 4234
	3764-4
	3783-66
TMS3132	1339-45
	1265-22
TMS320	★ 1699
TMS4016-12	3778-40
TMS4016-20	3778-135
TMS4016-25	3779-25
TMS4044-12	3780-17
TMS4044-20	3780-43
TMS4044-25	3780-66
TMS4044-45	3780-127
TMS40L44-12	3780-18
TMS40L44-20	3780-44
TMS40L44-25	3780-67
TMS40L44-45	3780-128
TMS4116-15	3768-97
	¶ 322-18
TMS4116-20	3769-1
	¶ 322-18
TMS4116-25	3769-14
	¶ 322-18
TMS4161	★ 4214
	3769-87
TMS4164-12	★ 543
	★ 4219
	3769-57
	¶ 320-7
	¶ 320-8
	¶ 320-9
	¶ 322-18
	¶ 322-19
	¶ 322-20
	¶ 323-2
TMS4164-15	★ 543
	★ 4219
	3769-85
	¶ 320-7
	¶ 320-8
	¶ 320-9
	¶ 322-18
	¶ 322-19
	¶ 322-20
	¶ 323-2
TMS4164-20	★ 543
	★ 4219
	3769-111
	¶ 320-7
	¶ 320-8
	¶ 320-9
	¶ 322-18
	¶ 322-19
	¶ 322-20
	¶ 323-2
TMS4164-25	★ 543
	★ 4219
	3769-116
	¶ 320-7
	¶ 320-8
	¶ 320-9
	¶ 322-18
	¶ 322-19
	¶ 322-20
	¶ 323-2
TMS4256-10	★ 4212
	3769-130
TMS4256-12	★ 4212
	3770-6
TMS4256-15	★ 4212
	3770-13
TMS4256-20	★ 4212
	3770-19
TMS4257-10	★ 4212
	3769-131
TMS4257-12	★ 4212
	3770-7
TMS4257-15	★ 4212
	3770-14
TMS4257-20	★ 4212
	3770-20
TMS4416-15	★ 4220
	3769-25
	¶ 323-1
	¶ 323-2
TMS4416-20	★ 4220
	3769-27
	¶ 323-1
	¶ 323-2
TMS4416-25	★ 4220
	3769-28
	¶ 323-1
	¶ 323-2
TMS4464-10	★ 4213
	3769-117
TMS4464-12	★ 4213
	3769-118
TMS4464-15	★ 4213
	3769-119
TMS4464-20	★ 4213
	3769-120
TMS4500A	★ 4221
	2680-109
	¶ 317-9
	¶ 317-10
	¶ 317-11
TMS47128-25	★ 4224
	3787-10
TMS47128-35	★ 4224
	3787-28
TMS47128-45	★ 4224
	3787-39
TMS47256-25	★ 4223
	3787-72
TMS47256-35	★ 4223
	3787-86
TMS47256-45	★ 4223
	3787-98
TMS4732	★ 4226
	3785-29
	¶ 324-1
TMS4732-30	★ 4226
	3784-97
	¶ 324-1
TMS4732-35	★ 4226
	3784-123
	¶ 324-1
TMS4732-45	★ 4226
	3785-30
	¶ 324-1
TMS4764	★ 4225
	3786-84
TMS4764-30	★ 4225
	3786-18
TMS4764-35	★ 4225
	3786-49
TMS4764-45	★ 4225
	3786-85
TMS5100	3169-96
TMS5110	★ 1717
	3169-97
TMS5200	3169-98
TMS5220	★ 1717
	3169-99
TMS5501	1346-22
	¶ 275-17
	¶ 276-2
TMS5517	★ 543
TMS6100	★ 1718
	3169-111
TMS6125	★ 1718
	3169-112
TMS7000	★ 1704
	1343-134
	★ 1704
	1281-19
TMS7001	★ 1704
TMS7007	★ 1704
TMS70120	★ 1704
TMS7020	★ 1704
	1343-135
	★ 1704
	1281-20
TMS7040	★ 1704
	1343-88
	1343-136
	★ 1704
	1281-21
TMS7041	★ 1704
	1343-139
	★ 1704
	1281-22
TMS70C00	★ 1704
	1343-129
TMS70C20	★ 1704
	1343-130
TMS70C40	★ 1704
	1343-89
	1343-137
TMS70E40	1343-131
	1281-23
TMS70L22	1343-138
	1281-24
TMS9118	★ 1712
TMS9128	★ 1712
TMS9129	★ 1712
TMS9900	★ 1702
	1349-125
	¶ 262-1
	¶ 262-2
	¶ 263-4
	¶ 274-11
	¶ 275-17
	¶ 276-3
	★ 1702
	1287-14
	¶ 262-1
	¶ 262-2
	¶ 263-4
	¶ 274-11
	¶ 275-17
	¶ 276-3
TMS9900-40	★ 1702
	1349-126
	¶ 262-1
	¶ 262-2
	¶ 263-4
	¶ 274-11
	¶ 275-17
	¶ 276-3
	★ 1702
	1287-15
	¶ 262-1
	¶ 262-2
	¶ 263-4
	¶ 274-11
	¶ 275-17
	¶ 276-3
TMS9901	★ 1712
	1350-14
TMS9902A	★ 1712
	1349-133
TMS9903	★ 1712
	1350-17
TMS9909	1349-146
TMS99105A	★ 1702
	1349-117
	★ 1702
	1287-16
TMS9911	1349-145
TMS99110A	★ 1702
	1349-118
	★ 1702
	1287-17
TMS9914A	★ 1712
	1349-148
TMS9918A	★ 1712
	1349-138
	1353-18
TMS9923	1352-86
TMS9927	1349-139
	1353-38
	¶ 262-1
	¶ 263-15
TMS9928A	1350-20
	1353-19
TMS9929A	1350-21
	1353-20
TMS9937	★ 1712
	1349-140
TMS9940E	1349-115
	¶ 263-13
TMS9940M	1349-116
	¶ 263-13
	1287-18
	¶ 263-13
TMS99531	★ 1712
	1350-15
TMS99532	★ 1712
	3217-156
	★ 1712
	1349-147
TMS99534	★ 1712
	3217-157
TMS99541	★ 1712
	1349-141
TMS99610	★ 1712
TMS99650	★ 1712
	1350-5
TMS9980A	1349-127
	1287-19
TMS9981	1349-128
	1287-20
TMS9995	★ 1702
	1287-21
TMSW754P	★ 2055
TP4320A	589-66
TZ2003	3216-164
UCN4810A	2663-144
	¶ 287-15
UDN2841	3157-132
UDN2845	3157-133
ULN2001A	2679-138
	3158-67
ULN2002A	2679-156
	3158-68
ULN2003A	2679-119
	3158-69
ULN2004A	2679-90
	3158-70
ULN2005A	3158-71
ULN2064	2682-124
	3157-134
ULN2065	2682-125
	3157-135
ULN2066	2682-126
ULN2067	2682-127
ULN2068	2682-128
ULN2069	2682-129
ULN2074	2682-130
ULN2075	2682-131
VM61001	3169-74
VM61002	★ 1718
	3169-75
VM61003	★ 1718
	3169-76
VM61004	★ 1718
	3169-77
VM61005	★ 1718
	3169-78
VM61006	★ 1718
VM71001	3169-79
VM71002	3169-80
VM71003	★ 1718
	3169-81
VM71004A	★ 1718
VM71005A	★ 1718
XDS	★ 1931
uA2240C	3220-29
uA2240M	3220-30
uA709AM	3191-50
uA709C	3199-62
uA709M	3197-20
uA710M	3159-27
uA711C	3161-40
uA723C	3229-22
uA723M	3229-23
uA733C	3156-125
uA733M	3156-126
uA741C	3198-54
uA741M	3196-57
uA747C	3208-47
uA747M	3207-51
uA748C	3198-60
uA748M	3197-13
uA777M	3190-60
uA7806C	3222-67
uA7808C	3222-134
uA7810C	3223-40
uA7812C	3223-117
uA7815C	3224-85
uA7818C	3225-24
uA7824C	3225-111
uA7885C	3223-19
uA78L02AC	3221-3
uA78L02C	3221-4
uA78L05AC	3221-14
uA78L05C	3221-15
uA78L06AC	3222-78
uA78L06C	3222-79
uA78L08AC	3222-93
uA78L08C	3222-94
uA78L09AC	3223-21
uA78L09C	3223-22
uA78L10AC	3223-29
uA78L10C	3223-30
uA78L12AC	3223-53
uA78L12C	3223-54
uA78L15AC	3224-27
uA78L15C	3224-28
uA78M05C	3221-53
uA78M05M	3221-54
uA78M06C	3222-41
uA78M06M	3222-42
uA78M08C	3222-110
uA78M08M	3222-111
uA78M10C	3223-38
uA78M12C	3223-72
uA78M12M	3223-73
uA78M15C	3224-45
uA78M15M	3224-46
uA78M20C	3225-45
uA78M20M	3225-46
uA78M24C	3225-79
uA78M24M	3225-80
uA7905C	3226-47
uA7906C	3226-81
uA7908C	3226-105
uA7912C	3227-17
uA7915C	3227-68
uA7918C	3227-95
uA7924C	3227-119
uA7952C	3226-74
uA79M05C	3226-24
uA79M05M	3226-25
uA79M06C	3226-77
uA79M06M	3226-78
uA79M08C	3226-90
uA79M08M	3226-91
uA79M12C	3226-126
uA79M12M	3226-127
uA79M15C	3227-42
uA79M15M	3227-43
uA79M20C	3227-98
uA79M20M	3227-99
uA79M24C	3227-114
uA79M24M	3227-115
uA9636AC	2668-17
uA9637AC	2673-57
uA9638C	2671-4
uA9639C	2668-14

TRW LSI Products

Device	Page-Line
CA2100	3170-88
CA2300	3170-89
CA2301	3170-90
CA2418	3170-91
CA2600	3170-92
CA2601	3170-93
CA2800	3156-56
CA2810	3156-57
CA2820	3156-58
CA2830	3156-59
CA2840	3156-60
CA2842	3156-61
CA2850	3156-62
CA2851	3156-63
CA2870	3156-64
CA2871	3156-65
CA2875	3156-66
CA2876	3156-67
CA2880	3156-68
MPY008A	★ 1164
	604-162
	604-163
MPY008H	★ 1164
	604-164
	604-165
MPY012A	★ 1164
	604-142
	604-143

Arranged alphanumerically from left to right

© IC MASTER 1984

TRW LSI Products (Cont'd)

Device	Page-Line
MPY012H	★ 1164
	604-129
	604-130
MPY012K	604-131
	604-132
MPY016A	★ 1164
	604-146
	604-147
MPY016H	★ 1164
	604-134
	604-135
MPY016K	★ 1164
	★ 1165
	604-136
	604-137
MPY08HU	★ 1164
	604-114
	604-115
MPY1024	604-140
	604-141
MPY112K	★ 1163
	★ 1164
	604-127
	604-128
MPY16HD	604-138
	604-139
TDC1001	★ 3704
	2625-45
TDC1002	★ 3704
	2626-1
TDC1003	★ 1164
	605-33
TDC1004	603-154
	640-27
TDC1005	3791-57
	3791-58
TDC1006	3791-94
	3791-95
TDC1007	★ 3704
	2625-41
	2625-42
TDC1008	★ 1164
	605-29
	605-30
TDC1008J	★ 1164
	605-3
TDC1008JM	★ 1164
	605-4
TDC1009	★ 1164
	605-34
	605-35
TDC1009J	★ 1164
	604-144
TDC1009JM	★ 1164
	604-145
TDC1010	★ 1164
	605-38
	605-39
TDC1010J	★ 1164
	604-152
TDC1010JM	★ 1164
	604-153
TDC1014	★ 3704
	2625-15
	2625-16
TDC1016-10	★ 3704
	2643-48
TDC1016-8	★ 3704
	2640-8
	2646-31
TDC1016-9	★ 3704
	2643-30
	2645-41
TDC1018	★ 3702
	2640-6
TDC1019J	★ 3704
	2628-50
TDC1021	★ 3704
	2625-2
	2625-3
TDC1022	★ 1162
	603-17
	603-18
TDC1023	★ 1159
	603-155
	640-28
TDC1025	★ 3704
	★ 3705
	2625-40
	2627-11
TDC1027	★ 3704
	★ 3706
	2625-24
	2625-25
TDC1028	★ 1160
	603-153
	641-59
TDC1029	★ 3704
	★ 3707
	2625-13
	2625-20
TDC1030	★ 1161
	3757-64
TDC1043	★ 1164
	★ 1166
	604-107
TDC1048	★ 3703
	2625-43
	2628-46
TMC2008	★ 1168
	571-171
TMC2009	★ 1169
	571-158
TMC2010	★ 1170
	571-178
TMC2016	★ 1167
	571-166

Unitrode

Device	Page-Line
PIC600	3231-19
PIC601	3231-20
PIC602	3231-21
PIC610	3231-22
PIC611	3231-23
PIC612	3231-24
PIC625	3231-25
PIC626	3231-26
PIC627	3231-27
PIC635	3231-28
PIC636	3231-29
PIC637	3231-30
PIC645	3231-31
PIC646	3231-32
PIC647	3231-33
PIC655	3231-34
PIC656	3231-35
PIC657	3231-36
PIC660	3231-37
PIC661	3231-38
PIC662	3231-39
PIC670	3231-40
PIC671	3231-41
PIC672	3231-42
PIC730	3231-43
PIC740	3231-44
PIC800	3231-45
PIC801	3231-46
PIC810	3231-47
PIC811	3231-48
PIC900	3234-140
UC117	★ 3711
	3229-3
UC137	★ 3711
	3229-108
	3230-3
UC150	★ 3711
	3228-75
UC1524	★ 3709
	3231-49
UC1524/883B	★ 3709
UC1524A	★ 3709
	★ 3709
	3231-50
	¶ 313-5
UC1524A/883B	★ 3709
UC1525A	★ 3709
	3231-51
UC1525A/883B	★ 3709
UC1526	★ 3709
	3231-52
UC1526/883B	★ 3709
UC1527A	★ 3709
	3231-53
UC1527A/883B	★ 3709
UC1535	3231-54
UC1543	★ 3710
	3235-147
UC1544	★ 3710
	3235-148
UC1637	★ 3710
UC1706	★ 3710
UC1834	★ 3710
	3234-131
UC1840	★ 3709
	3231-55
	¶ 312-3
UC1840/883B	★ 3709
	¶ 312-3
UC1842	★ 3709
	3231-56
UC1842/883B	★ 3709
UC1846	★ 3709
	3232-123
	¶ 311-16
UC1846/883B	★ 3709
	¶ 311-16
UC1847	★ 3709
	3232-124
UC1847/883B	★ 3709
UC1901	★ 3710
	3235-149
	¶ 311-15
UC1903	★ 3710
	3235-150
UC217	★ 3711
	3229-4
UC237	★ 3711
	3229-109
	3230-4
UC250	★ 3711
	3228-76
UC2524	3231-57
UC2524A	3231-58
UC2525A	3231-59
UC2526	3231-60
UC2527A	3231-61
UC2543	★ 3710
	3235-151
UC2544	★ 3710
	3235-152
UC2637	★ 3710
UC2706	★ 3710
UC2834	★ 3710
	3234-132
UC2840	3231-62
UC2842	3231-63
UC2846	3232-125
UC2847	3232-126
UC2901	★ 3710
	3235-153
UC2903	★ 3710
	3235-154
UC317	★ 3711
	3229-5
UC337	★ 3711
	3229-110
	3230-5
UC350	★ 3711
	3228-77
UC3524	3231-64
UC3524A	3231-65
UC3525A	3231-66
UC3526	3231-67
UC3527A	3231-68
UC3543	★ 3710
	3235-155
UC3544	★ 3710
	3235-156
UC3637	★ 3710
UC3706	★ 3710
UC3717	★ 3710
UC3834	★ 3710
	3234-133
UC3840	3231-69
UC3842	3231-70
UC3846	3232-127
UC3847	3232-128
UC3901	★ 3710
	3235-157
UC3903	★ 3710
	3235-158
UC493A	★ 3709
	3231-71
UC493AC	★ 3709
	3231-72
UC494A	★ 3709
	3231-73
UC494AC	★ 3709
	3231-74
UC495	★ 3709
	3231-75
UC495A	★ 3709
	3231-76
UC495AC	★ 3709
	3231-77
UC495B	★ 3709
	3231-78
UC495BC	★ 3709
	3231-79
UC7805	★ 3711
	3221-110
UC7805A	★ 3711
	3221-79
UC7805AC	★ 3711
	3221-80
UC7805C	★ 3711
	3221-111
UC7812	★ 3711
	3223-84
UC7812A	★ 3711
	3223-118
UC7812AC	★ 3711
	3223-119
UC7812C	★ 3711
	3223-85
UC7815	★ 3711
	3224-55
UC7815A	★ 3711
	3224-56
UC7815AC	★ 3711
	3224-57
UC7815C	★ 3711
	3224-58
UC7905	★ 3711
	3226-49
UC7905A	★ 3711
	3226-50
UC7905AC	★ 3711
	3226-51
UC7905C	★ 3711
	3226-52
UC7912	★ 3711
	3227-19
UC7912A	★ 3711
	3227-20
UC7912AC	★ 3711
	3227-21
UC7912C	★ 3711
	3227-22
UC7915	★ 3711
	3227-70
UC7915A	★ 3711
	3227-71
UC7915AC	★ 3711
	3227-72
UC7915C	★ 3711
	3227-73

Universal Semiconductor, Inc.

Device	Page-Line
ISO3A	★ 4930
	4461-25
ISO3B	★ 4930
	4461-27
ISO3C	★ 4930
	4461-29
ISO3D	★ 4930
	4461-31
ISO3E	★ 4930
	4461-33
ISO3F	★ 4930
	4461-35
ISO3G	★ 4930
	4461-37
ISO3H	★ 4930
	4461-39
ISO5A	★ 4930
	4464-20
ISO5B	★ 4930
	4464-22
ISO5C	★ 4930
	4464-24
ISO5D	★ 4930
	4464-26
ISO5E	★ 4930
	4464-28
ISO5F	★ 4930
	4464-30
ISO5G	★ 4930
	4464-32
ISO5H	★ 4930
	4464-34
UM2147-1	3779-107
UM2333-25	3784-74

VLSI Technology

Device	Page-Line
CMOS Library	★ 4931
	4478-26
HMOS Library	★ 4931
	4478-27
VL4500A	★ 4254
	2680-110
VT23121	3786-110
VT23128	★ 4252
	3787-12
VT23128A	★ 4252
	3786-125
VT23128B	★ 4252
	3787-40
VT23129	★ 4252
	3787-13
VT23129A	★ 4252
	3786-126
VT23129B	★ 4252
	3787-41
VT23256	★ 4253
	3787-73
VT23257	★ 4253
	3787-74
VT2332	★ 4249
	3785-33
VT2332A	★ 4249
	3784-98
VT2333	★ 4249
	3785-34
VT2333A	★ 4249
	3784-99
VT2364	★ 4250
	3786-86
VT2364A	★ 4250
	3786-19
VT2364B	★ 4250
	3785-97
VT2365	★ 4251
	3786-99
VT2365A	★ 4251
	3786-30
VT2365B	★ 4251
	3785-71
VT2366	★ 4251
	3786-100
VT2366A	★ 4251
	3786-31
VT2366B	★ 4251
	3785-72
VT23C64	3785-79

Western Digital

Device	Page-Line
AMS-D11	1963-19
AMS-DB	1967-19
BR1941	640-11
BR1941-00	2685-44
BR1941-02	2685-45
BR1941-04	2685-49
BR1941-05	2685-46
BR1941-06	2685-50
CP1600	1281-33
CP1651	1348-124
CP1661	1348-125
CP1851	1348-140
CP9008	1347-47
	1287-22
CR1872	1339-49
CR2872	1339-50
DM1881	1348-131
DM1883	1348-132
	1355-12
FD1761	1353-83
FD1761-02	1354-16
FD1763-02	1354-17
FD1765-02	1354-18
FD1767-02	1354-19
FD1771-01	1348-135
	1353-84
FD1781	1348-136
FD1781-01	1348-137
	1353-85
FD1791-02	1348-138
	1353-86
FD1792-02	1353-87
FD1793-02	1343-12
	1344-97
	1345-125
	1346-127
	1351-22
	1353-88
FD1794-02	1353-89
FD1795-02	1348-139
	1353-90
FD1797-02	1343-13
	1344-98
	1345-126
	1346-128
	1351-23
	1353-91
FR1502-10	3757-30
FR1502-11	3757-27
MP1600	1287-23
MP1651	1348-126
MP1661	1348-127
PT1472B	2686-19
PT1472B-01	2686-20
PT1482B	2686-24
PT1482B-01	2686-27
SKC-85	1963-20
SMP-E6	1963-23
SMP-E8	1963-35
TR1402	2686-49
TR1602	2686-50
	¶ 285-9
TR1863-00	2686-63
TR1863-02	2686-69
TR1863-04	2686-79
TR1865-00	2686-64
	¶ 285-9
TR1865-02	2686-70
	¶ 285-9
TR1865-04	2686-80
	¶ 285-9
TR1983	2685-64
	1345-52
UC1671	2685-17
	1348-129
UC1971	1348-130
WD/900	1965-34
WD0900	1965-33
WD1000	1354-78
WD1001	1354-75
WD1002	1354-84
WD1002-MTB	★ 2060
	1354-80
WD1002-SHD	★ 2058
	1354-81
WD1010	★ 1720
	1354-74
WD1011	★ 1722
	1354-76
WD1012	★ 1723
	1354-85
WD1014	★ 1724
	2665-17
	★ 1724
	1353-57
	1354-83
WD1015	★ 1725
	1354-72
WD1050	★ 1728
	1354-46
WD1100	★ 1730
	1354-79
WD1100-13	★ 1730
	1354-77
WD1510-00	3757-65
WD1510-01	3757-66
WD1510-02	3757-71
WD1691	1353-121
WD1770	★ 1733
	1353-92
WD1772	★ 1733
	1353-93
WD1773	★ 1735
	1353-94
WD1820	4467-13
WD1828/40	4467-14
WD1931	2685-15
WD1933	1346-65
WD193X-00/10	2686-30
WD193X-01/11	2686-31
WD193X-02/12	2686-32

¶ Indicates page number in Application Note Directory.
★ Indicates additional data is provided on the page noted.

IC MASTER

Western Digital (Cont'd)

Device	Page-Line
WD193X-03/13	2686-33
WD1943	640-12
WD1943-00	2685-41
WD1943-02	2685-42
WD1943-04	2685-47
WD1943-05	2685-43
WD1943-06	2685-48
WD1945	2685-59
WD1993-01	2685-12
WD1993-02	2685-13
WD1993-03	2685-14
WD2001	640-63
WD2002	640-64
WD2010	★ 1726
	1354-82
WD2123	2686-62
WD2143-03	1354-89
WD2412	3166-161
	3167-4
WD2501-01	2685-85
WD2501-03	2685-87
WD2501-11	2685-89
WD2511-01	★ 1174
	2685-86
WD2511-05	★ 1174
	2685-88
WD2511-11	★ 1174
	2685-90
WD2520	1352-92
WD2791	1353-109
WD2791-02	1353-95
WD2793-02	1353-110
WD2795-02	1353-111
WD2797-02	1353-112
WD2840	★ 1172
	1354-11
WD4200	1265-26
WD4210	1265-27
WD4320	1265-28
WD4321	1265-29
WD55	1265-30
WD74HC200	587-157
WD8206	★ 4260
	2665-19
WD8207	★ 4262
	2680-111
WD8250	2685-20
WD8275	★ 3109
	1354-35
WD8276	★ 3110
	1352-100
WD9000	1347-48
WD9216-00	1353-116
WD9216-01	1353-117
WD9914	★ 3111
	1353-124
WD9918	★ 3112
	1353-21
WD9928	★ 3112
	1353-22
WD9929	★ 3112
	1353-23

Wintek Corp.

Device	Page-Line
ABP04	★ 2062
ABP07	★ 2062
CAF50	★ 2062
CAF90	★ 2062
CAS90	★ 2062
CCC00	★ 2062
CFM00	★ 2062
CFM10	★ 2062
CFP00	★ 2062
CLL00	★ 2062
CPL00	★ 2062
CPL90	★ 2062
MAI04	★ 2062
MAI20	★ 2062
MCC14	1959-27
MCN18	★ 2062
	1961-12
MCN38	★ 2062
MCN68	★ 2062
MCI11	★ 2062
MCL10	★ 2062
MCL45	★ 2062
	1959-19
MCM81	★ 2062
MCS00	★ 2062
MCT10	★ 2062
MCV45	1959-20
MDS08	★ 2062
MDS44	★ 2062
MDS80	★ 2062
MFC04	★ 2062
MGP00	★ 2062
MPB00	★ 2062
MPI08	★ 2062
MRO17	★ 2062
MRO18	★ 2062
MSI08	★ 2062
RDA00	★ 2062
RDA01	★ 2062
RDA05	★ 2062
RDA09	★ 2062
RDC00	★ 2062
RDL00	★ 2062
RDU00	★ 2062
SDP10	★ 2062
SDP23	★ 2062
SFP32	★ 2062
SVC00	★ 2062
SVC03	★ 2062
Sprint68	1817-21

Xicor

Device	Page-Line
2864A	3759-16
X2201A	★ 4266
	3758-51
X2201ADM	★ 4266
	3758-52
X2210	★ 4266
	3758-15
X2210M	★ 4266
	3758-16
X2212	★ 547
	★ 4266
	3758-34
X2212DM	★ 547
	★ 4266
	3758-35
X2443	★ 4267
X2444	★ 4265
	★ 4267
	3758-3
X2804	★ 4267
	★ 4268
	3762-59
X2804A	★ 4267
	★ 4268
	3758-40
	¶ 318-15
X2804A-45	★ 4267
	★ 4268
	3758-43
X2804AM-45	★ 4267
	★ 4268
	3758-44
X2816	★ 547
	★ 4267
	★ 4268
	3765-48
X2816A	★ 547
	★ 4267
	★ 4268
	3758-80
	¶ 318-15
X2816A-35	★ 547
	★ 4267
	★ 4268
	3758-93
	3765-49
X2816A-45	★ 547
	★ 4267
	★ 4268
	3758-104
	3765-68
X2816AM	★ 547
	★ 4267
	★ 4268
	3758-81
X2816AM-35	★ 547
	★ 4267
	★ 4268
	3765-50
X2816AM-45	★ 547
	★ 4267
	★ 4268
	3765-69
X2864	★ 4267
	★ 4269

Zilog

Device	Page-Line
05-6168-01	1965-35
EMS8000	★ 1757
Model 11	1819-1
Model 21	1819-2
Model 31	1819-3
PDS8000	★ 1756
PDS8000MODEL30	1819-4
Z-SCAN8	★ 1758
Z-SCAN8000	★ 1757
Z8-SCB	★ 1753
	★ 1755
	★ 1759
	1955-17
	¶ 265-9
	¶ 271-11
Z80	★ 1738
	1348-54
	¶ 268-15
	¶ 269-10
	¶ 270-9
	¶ 270-10
	¶ 270-14
	¶ 270-15
	¶ 277-11
Z80-CTC	★ 1738
	1348-67
	¶ 268-15
	¶ 269-10
	¶ 270-9
	¶ 270-10
	¶ 270-14
	¶ 270-15
	¶ 276-8
	¶ 277-11
Z80-DART	★ 1738
	1348-111
	¶ 268-15
	¶ 269-10
	¶ 270-9
	¶ 270-10
	¶ 270-14
	¶ 270-15
	¶ 277-11
Z80-DMA	★ 1738
	1348-81
	¶ 268-15
	¶ 269-10
	¶ 270-9
	¶ 270-10
	¶ 270-14
	¶ 270-15
	¶ 277-11
Z80-PIO	★ 1738
	1348-87
	¶ 268-15
	¶ 269-10
	¶ 270-9
	¶ 270-10
	¶ 270-14
	¶ 270-15
	¶ 277-11
Z80-SIO	★ 1738
	1348-97
	¶ 268-7
	¶ 268-15
	¶ 269-10
	¶ 270-9
	¶ 270-10
	¶ 270-14
	¶ 270-15
	¶ 277-11
Z80-SIO/2	★ 1738
	1348-98
	¶ 268-15
	¶ 269-10
	¶ 270-9
	¶ 270-10
	¶ 270-14
	¶ 270-15
	¶ 277-11
Z80-SIO/9	★ 1738
	1348-99
	¶ 268-15
	¶ 269-10
	¶ 270-9
	¶ 270-10
	¶ 270-14
	¶ 270-15
	¶ 277-11
Z800	★ 1748
	1348-117
	¶ 277-11
Z8000	★ 1741
	★ 1756
	1350-118
	¶ 263-18
	¶ 264-7
	¶ 264-9
	¶ 265-14
	¶ 269-17
	¶ 270-8
	¶ 270-16
	¶ 271-17
	¶ 277-1
	¶ 277-8
	¶ 277-12
	¶ 277-13
	¶ 277-14
Z80000	★ 1749
	1352-75
Z8001	★ 1741
	1350-119
	¶ 264-10
	★ 1741
	1287-24
	¶ 264-10
Z8001A	★ 1741
	1350-120
	¶ 264-10
	★ 1741
	1287-25
	¶ 264-10
Z8001B	★ 1741
	1350-121
	¶ 264-10
	★ 1741
	1287-26
	¶ 264-10
Z8001DM	★ 1741
	1965-37
	¶ 264-10
Z8002	★ 1741
	1350-113
	¶ 279-3
	★ 1741
	1287-27
	¶ 279-3
Z8002A	★ 1741
	1350-114
	¶ 279-3
	★ 1741
	1287-28
	¶ 279-3
Z8002B	★ 1741
	1350-115
	¶ 279-3
	★ 1741
	1287-29
	¶ 279-3
Z8002DM	★ 1741
	1965-39
	¶ 279-3
Z8003	★ 1742
	1350-122
	★ 1742
	1287-30
Z8003A	★ 1742
	1350-123
Z8003B	★ 1742
	1350-124
Z8004	★ 1742
	1350-125
	★ 1742
	1287-31
Z8004A	★ 1742
	1350-126
Z8004B	★ 1742
	1350-127
Z8010-Z-MMU	★ 1743
	1351-29
	¶ 264-10
Z8010A-Z-MMU	★ 1743
	1351-30
	¶ 264-10
Z8010B-Z-MMU	★ 1743
	1351-31
	¶ 264-10
Z8015-PMMU	★ 1743
	1351-32
Z8016-Z-DTC	★ 1744
	1351-12
	¶ 277-15
Z8030-Z-SCC	★ 1744
	1351-37
	¶ 267-2
	¶ 275-14
	¶ 277-1
	¶ 277-16
Z8030A-Z-SCC	★ 1744
	1351-38
	¶ 267-2
	¶ 275-14
	¶ 277-1
	¶ 277-16
Z8031-Z-ASCC	★ 1745
	1352-84
Z8036-Z-CIO	★ 1745
	1351-6
	¶ 261-14
	¶ 267-2
Z8036A-Z-CIO	★ 1745
	1351-7
	¶ 261-14
	¶ 267-2
Z8038-Z-FIO	★ 1746
	1351-20
	¶ 263-8
	¶ 267-2
	¶ 272-9
Z8038A-FIO	★ 1746
	1351-21
	¶ 263-8
	¶ 267-2
	¶ 272-9
Z8060-Z-FIFO	★ 1746
	1351-17
Z8065-Z-BEP	★ 1747
	1351-2
Z8068-Z-DCP	★ 1747
	1351-10
Z8070-Z-APU	★ 1750
	1348-116
	1350-128
	1352-76
	¶ 265-15
Z8090-Z-UPC	★ 1755
	1351-24
Z80A	★ 1738
	1348-55
	¶ 268-15
	¶ 269-10
	¶ 270-9
	¶ 270-10
	¶ 270-14
	¶ 271-15
	¶ 277-11
	★ 1738
	1281-35
	¶ 268-15
	¶ 269-10
	¶ 270-9
	¶ 270-10
	¶ 270-14
	¶ 271-15
	¶ 277-11
Z80A-CTC	★ 1738
	1348-68
	¶ 268-15
	¶ 269-10
	¶ 270-9
	¶ 270-10
	¶ 270-14
	¶ 270-15
	¶ 277-11
Z80A-DART	★ 1738
	1348-112
	¶ 268-15
	¶ 269-10
	¶ 270-9
	¶ 270-10
	¶ 270-14
	¶ 270-15
	¶ 277-11
Z80A-DMA	★ 1738
	1348-82
	¶ 268-15
	¶ 269-10
	¶ 270-9
	¶ 270-10
	¶ 270-14
	¶ 270-15
	¶ 277-11
Z80A-PIO	★ 1738
	1348-88
	¶ 268-15
	¶ 269-10
	¶ 270-9
	¶ 270-10
	¶ 270-14
	¶ 270-15
	¶ 277-11
Z80A-SIO/1	★ 1738
	1348-100
	¶ 268-15
	¶ 269-10
	¶ 270-9
	¶ 270-10
	¶ 270-14
	¶ 270-15
	¶ 277-11
Z80A-SIO/2	★ 1738
	1348-101
	¶ 268-15
	¶ 269-10
	¶ 270-9
	¶ 270-10
	¶ 270-14
	¶ 270-15
	¶ 277-11
Z80A-SIO/9	★ 1738
	1348-102
	¶ 268-15
	¶ 269-10
	¶ 270-9
	¶ 270-10
	¶ 270-14
	¶ 270-15
	¶ 277-11
Z80B	★ 1738
	1348-56
	¶ 268-15
	¶ 269-10
	¶ 270-9
	¶ 270-10
	¶ 270-14
	¶ 270-15
	¶ 277-11
Z80B-CTC	★ 1738
	1348-69
	¶ 268-15
	¶ 269-10
	¶ 270-9
	¶ 270-10
	¶ 270-14
	¶ 270-15
	¶ 277-11

Arranged alphanumerically from left to right.

© IC MASTER 1984

Device	Page-Line
Zilog	**(Cont'd)**
Z80B-PIO	★ 1738
	1348-89
	¶ 268-15
	¶ 269-10
	¶ 270-9
	¶ 270-10
	¶ 270-14
	¶ 270-15
	¶ 277-11
Z80B-SIO/9	★ 1738
	1348-103
	¶ 268-15
	¶ 269-10
	¶ 270-9
	¶ 270-10
	¶ 270-14
	¶ 270-15
	¶ 277-11
Z80H	★ 1738
	1281-37
	¶ 268-15
	¶ 269-10
	¶ 270-9
	¶ 270-10
	¶ 270-14
	¶ 270-15
	¶ 277-11
Z80L	★ 1738
	1348-57
	¶ 268-15
	¶ 269-10
	¶ 270-9
	¶ 270-10
	¶ 270-14
	¶ 270-15
	¶ 277-11
	★ 1738
	1281-38
	¶ 268-15
	¶ 269-10
	¶ 270-9
	¶ 270-10
	¶ 270-14
	¶ 270-15
	¶ 277-11
Z80MCB/16	★ 1738
	1955-23
	¶ 268-15
	¶ 269-10
	¶ 270-9
	¶ 270-10
	¶ 270-14
	¶ 270-15
	¶ 277-11
Z80MCB/4	★ 1738
	1955-24
	¶ 268-15
	¶ 269-10
	¶ 270-9
	¶ 270-10
	¶ 270-14
	¶ 270-15
	¶ 277-11
Z8108	1348-115
	1281-39
Z8400H	★ 1738
	1348-58
Z8400L	★ 1738
	1348-59
Z8410	★ 1739
	1348-83
Z8420	★ 1739
	1348-90
Z8430	★ 1739
	1348-70
Z8440	★ 1740
	1348-104
Z8441	1348-105
Z8442	1348-106
Z8449	1348-107
Z8470	★ 1740
	1348-113
	¶ 270-10
Z8500	★ 1751
	¶ 267-3
Z8530-SCC	★ 1751
	1354-24
	¶ 277-16
Z8531	★ 1751
Z8536-CIO	★ 1752
	1352-94
	¶ 261-14
	¶ 270-9
Z8536A-CIO	★ 1752
	1352-95
	¶ 261-14
	¶ 270-9
Z8581	★ 1752
	1348-63
	1355-8
Z8581-CGC	★ 1752
	1352-93
Z8590	★ 1755
	1354-57
	¶ 260-8
Z8590-UPC	★ 1755
	1354-58
	¶ 260-8
Z8601	★ 1753
	1348-36
	¶ 271-3
	★ 1753
	1283-1
	¶ 271-3
Z8601-12	★ 1753
	1283-2
	¶ 271-3
Z8601L	★ 1753
	★ 1753
	1348-37
	¶ 271-3
Z8602	1348-38
Z8603	★ 1753
	1348-39
	★ 1753
	1283-3
Z8611	★ 1754
	1348-40
	¶ 264-1
	★ 1754
	1283-4
	¶ 264-1
Z8611-12	★ 1754
	1283-5
	¶ 264-1
Z8612	★ 1754
	1348-41
	★ 1754
	1283-6
Z8612-12	★ 1754
	1283-7
Z8613	★ 1754
	1348-42
	★ 1754
	1283-8
Z8613-12	★ 1754
	1283-9
Z8671	★ 1754
	1348-43
	¶ 277-17
	★ 1754
	1283-10
	¶ 277-17
Z8675	1348-44
	1283-11
Z8681	★ 1755
	1348-45
	★ 1755
	1283-12
Z8681-12	★ 1755
	1283-13
Z8682	1348-46
ZDS-1/40	1819-5

¶ Indicates page number in Application Note Directory.
★ Indicates additional data is provided on the page noted.

GET HIGH TECHNOLOGY WITHOUT HIGH ANXIETY.

"DON'T GIVE ME EXCUSES ABOUT 'UNDELIVERED PARTS', McGINNIS! I WANT THESE ROBOTS COMPLETED AND READY FOR SHIPPING BY NINE O'CLOCK TOMORROW MORNING!"

CALL SCHWEBER FOR IMMEDIATE DELIVERY ON:

AMD	Century Data	Harris	Mostek	Sprague
AMI	Computer Memories, Inc.	Hewlett Packard	Motorola	Tandon
AMP	Corning	IBM	National	Timeplex
Allen-Bradley	Crydom	IR	Qume	Western Peripherals
Amphenol	Data General	Intersil	Racal-Vadic	Westinghouse
Anadex	Esprit	Intersil Systems	RCA	Zilog
Beehive International	Fairchild	KEMET	Robinson Nugent	
Bourns	General Electric	King	Seeq	
Burndy	General Instrument/Opto.	3M	Signetics	

Schweber is the high technology leader in distribution. Our technology centers are located nationwide. Staffed with specialists, they feature the latest in computer products, semiconductors and passive components.

Westbury, NY: 516/334-7474 ■ Rochester, NY: 716/424-2222 ■ Fairfield, NJ: 201/227-7880 ■ Danbury, CT: 203/792-3500
Bedford, MA: 617/275-5100 ■ Manchester, NH: 603/625-2250 ■ Horsham, PA: 215/441-0600 ■ Pittsburgh, PA: 412/782-1600
Gaithersburg, MD: 301/840-5900 ■ Raleigh, NC: 919/876-0000 ■ Atlanta, GA: 404/449-9170 ■ Huntsville, AL: 205/882-2200
Orlando, FL: 305/331-7555 ■ Hollywood, FL: 305/927-0511 ■ Dayton, OH: 513/439-1800 ■ Beachwood, OH: 216/464-2970
Livonia, MI: 313/525-8100 ■ Elk Grove, IL: 312/364-3750 ■ Brookfield, WI: 414/784-9020 ■ Edina, MN: 612/941-5280
Cedar Rapids, IA: 319/373-1417 ■ Kansas City, KA: 913/492-2921 ■ St. Louis, MO: 314/739-0526 ■ Tulsa, OK: 918/622-8000
Dallas, TX: 214/661-5010 ■ Austin, TX: 512/458-8253 ■ Houston, TX: 713/784-3600 ■ Phoenix, AZ: 602/997-4874
Sacramento, CA: 916/929-9732 ■ Santa Clara, CA: 408/748-4700 ■ Canoga Park, CA: 213/999-4702
Irvine, CA: 714/863-0200, 213/537-4321

SCHWEBER ELECTRONICS

© 1984 SCHWEBER ELECTRONICS CORPORATION

© IC MASTER 1984

ALTERNATE SOURCE DIRECTORY

The Alternate Source Directory is an industry-wide cross reference of those devices which manufacturers claim are pin-for-pin and functional equivalents to IC's made by other firms. It is a compilation of many individual references and shows literally thousands of alternates that are not implied by their model numbers, especially in the linear and memory areas. Unlike the usual alternate source guides, this directory leads you to many alternate sources for any particular device, not just one. Containing over 50,000 cross references, it is the most comprehensive alternate source directory ever published.

HOW TO USE THE ALTERNATE SOURCE DIRECTORY

The second column of this Alternate Source Directory shows devices which are replacements for those in the first column. Devices listed in **BOLD FACE** type have technical data in the Master Selection Guide. This information begins on the page listed to the right of the **BOLD FACE** part numbers. Products preceded by a ◆ have been discontinued by the manufacturer. This section does include devices not listed in the Master Section Guide; e.g., discontinued items, DTL and 54L devices.

In order to maintain this list within some reasonable bounds, the A and B suffixes indicating improved versions generally have been dropped. If this were not done, for example, every higher speed selection conjured up by a memory manufacturer would result in a device that could replace many equal or slower competitors and this directory would become highly involved in slight performance variations. Moreover, improved performance is only important if your circuits take advantage of it.

One of the difficulties with any cross reference is that devices meant to be alternates do not necessarily perform the same in all circuits. Thus, it will be necessary for you to check specifications, or even check circuit performance before deciding which alternates are right for you. A major benefit of this list is that it gives you more alternatives to study. But if you do not find what you need here, it may be possible to find additional alternates by locating the device in the Master Selection Guide. Particularly for digital circuits, the other products grouped with it will normally offer similar or identical performance.

© IC MASTER 1984

VERZEICHNIS VON AUSTAUSCH-BAREN BAUELE-MENTEN

Das Verzeichnis von austauschbaren Bauelementen ist eine umfassende vergleichende Äquivalenzliste für die gesamte Halbleiterindustrie. Darin sind solche Bauelemente enthalten die, nach Herstellerangaben, nach Funktionen und Pinbelegung mit Typen anderer Hersteller voll austauschbar sind. Es ist eine Zusammenfassung von vielen Einzelangaben und enthält Tausende von Äquivalenztypen, die nicht aus den Typennummern hervorgehen, besonders im Linear- und Speicherbereich. Im Gegensatz zu üblichen Äquivalenzlisten bietet dieses Verzeichnis nicht nur eine sondern veile Alternativlösungen für jedes einzelne Bauelment. Mit über 50,000 Querverweisen ist es die umfassendste Referenzliste, die je veröffentlicht wurde.

GEBRAUCHSANLEITUNG FÜR DIE ÄQUIVALENZLISTE

Die zweite Spalte dieses Verzeichnisses enthält Bauteile, welche für die in der ersten Spalte austauchbar sind. Für Bauteile in Fettdruck finden Sie technische Daten im Master Selection Guide. Diese Information beginnt auf der Seite, die rechts neben den fettgedruckten Typennummern erscheint. Produkte mit einem vorgestellten ♦ Zeichen werden nicht mehr hergestellt. Dieser Abschnitt enthält auch Bauelemente, die nicht im Master Selection Guide aufgelistet sind, z.B. nicht mehr produzierte Teile, DTL und 54L Bauelemente.

Diese Auflistung wurde aus Hersteller-Empfehlungen erstellt. Nachdem jede Firma dazu neigt, nur sich selbst als Alternative zu den bekannten Herstellern zu nennen und größere Firmen kleinere gerne ignorieren, hat nicht jedes Bauelement seine jeweilige Entsprechung Daher sollten Sie, wenn Sie nach Alternativen für ein Bauteil einer weniger bekannten Firma suchen, zunächst die entsprechenden Aquivalenztypen nachschlagen, insbesondere wenn sie von größeren Firmen sind, und damit evtl. weitere Alternativen ausfindig machen.

Um diese Liste nicht zu umfangreich werden zu lassen, wurden die A- und B-suffixe, die verbesserte Versionen bezeichnen, in der Regel Weggelassen. Wäre dies nicht geschehen, dann würde z.B. jede Selektion nach höherer Geschwindigkeit, die von einem Speicher-Hersteller durchgeführt wurde, ein Bauelement ergeben, das viele gleichschnelle oder langsamere Versionen von anderen Herstellern ersetzen könnte, und diese Vergleichsliste hätte eine Vielzahl von Bauelementen, die sich nur ganz geringfügig voneinander unterscheiden. Darüber hinaus sind bessere Parameter nur dann wichtig, wenn Sie diese in Ihrer Schaltung zu Ihrem Vorteil nutzen können.

Eine der Schwierigkeiten, die bei jeder Aquivalenzliste auftreten, ist die, daß austauschbare Bauelemente nicht unbedingt in allen Schaltungen dieselbe Funktion erfüllen. Daher sollten Sei, bevor Sei sich für einen Aquivalenztyp entscheiden, alle Datenblätter genau prüfen oder sogar feststellen, ob das betreffende Bauelement in Ihrer Schaltung richtig arbeitet.
Ein großer Vorteil dieser Liste ist, daß sie noch mehr Alternativlösungen zur Prüfung anbeitet. Aber wenn sie hier nicht das finden, was Sie suchen, können Sie möglicherweise weitere Aquivalenztypen feststellen, wenn Sie das Bauelement im Master Selection Guide nachschlagen. Insbesondere bei Digital-ICs bieten die anderen dort mitaufgeführten Produkte normalerweise ähnliche oder identische Funktionen.

© IC MASTER 1984

LE REPERTOIRE DES SOURCES ALTERNA-TIVES

Ce répertoire est un outil de référence utilisé largement dans toute l'industrie. Il permet de trouver quels sont les appareils qui, d'après leurs fabricants, sont les équivalents des circuits intégrés vendus par d'autres firmes. Cet ouvrage compile un nombre considérable de références individuelles, et offre littéralement des milliers de possibilités alternatives qui ne sont pas évidentes de par les numéros de modèle des appareils, particulièrement dans le cas des mémoires et des systèmes linéaires. A la difference des autres guides du même domaine, ce répertoire n'offre pas qu'une seule et unique source alternative pour un appareil, mais au contraire plusieurs. Il contient plus de 50,000 références et représente le Répertoire des Sources Alternatives le plus complet jamais publié a ce jour.

COMMENT SE SERVIR DU REPERTOIRE DES SOURCES ALTERNATIVES

La deuxieme colonne de ce répertoire fournit une liste de produits capables de remplacer ceux énumérés dans la première colonne. Les produits écrits en gros caractères sont étudiés en detail dans le Guide Général de Sélection — se reporter à la page indiquée à la droite des numéros de pièces marqués en gras. Les produits précédés du signe (♦) ne sont plus en fabrication. Cette Section comprend des appareils qui n'apparaissent pas dans le Guide Général de Sèlection, tels que les appareils qui ont été discontinués, les DTL et les 54L.

Cette liste a été conçue en fonction des renseignements fournis par les fabricants. Il est cepedant relativement bien connu que chaque fabricant estime être le seul sur le marché à pouvoir produire des appareils équivalents à ceix des grands fournisseurs, et que, d'autre part, les gros fournisseurs ont tendance a ignorer les petits. Cet état d'esprit explique pourquoi il est impossible de fournir des équivalents de remplacement pour chacun des appareils énumérés.

Si vous recherchez des sources alternatives pour un appareil provenant d'une société qui n'ait pas une renommée mondiale, nous vous conseillons de prendre les produits de remplacement que vous pourrez trouver, notamment s'ils proviennent de fabricants bien connus, et d'ensuite consulter ce Répertoire pour trouver des sources alternatives possibles.

Afin de maintenir cette liste dans certaines limites, les suffixes A et B indiquant des versions plus puissantes ont généralement été ignorés. Cela pour éviter qu'un fabricant ayant conçu un système mémoire avec possibilitié de sélection à plus grande vitesse, se trouve en concurrence directe avec des sociétés équivalentes ou plus petites. Ce Répertoire deviendrait alors trop spécialisé dans des différences de performance minimes. D'autre part, une meilleure performance n'est importante que si vos circuits en profitent.

L'un des problèmes que l'on rencontre dans tout système de renvoi est que des appareils dits alternants ne vont pas obligatoirement avoir les mêmes performances sur tous les circuits. Il vous sera donc nécessaire avant de decider quels vont être les alternants que vous allez utiliser, de vérifier les spécifications ou même les performances du circuit. L'un des avantages de cette liste est qu'elle vous procure énormément d'appareils alternants. Au cas ou vous ne pourriez trouver dans cette Section ce dont vous avez besoin, nous vous conseillons de consulter le Guide Général de Sélection. Dans le cas des circuits digitaux, en particulier, les produits énumérés dans chaque groupe offrent généralement des performances similaires ou identiques.

© IC MASTER 1984

DIRECTORIO DE FUENTES ALTERNAS

El Directorio de Fuentes Alternas es una referencia entre componentes usado ampliamente en la industria en la cual los fabricantes mantienen que provee estilo constructivo de terminales en los circuitos Integrados (IC) fabricados por otras compañías. Es una compilación de muchas referencias individuales y muestra literalmente miles de equivalentes alternas que no son obvias por su número de modelo, especialmente en las areas de lineal y memoria. En vez de las guías de fuentes, el alterno usual, este directorio los refiere a muchas fuentes alternas para cualquier componente, no solamente una. Con un contenido de 50,000 referencias de componente-a-componente es el directorio publicado más completo.

MODO DE EMPLEO DEL DIRECTORIO DE FUENTES ALTERNAS

La segunda columna de este Directorio de Fuentes Alternas muestra componentes que pueden reemplazar a los de la primera columna. Componentes que aparecen con letras oscuras tienen especificaciones técnicas en la Guía Maestra de Selección. Esta información empieza en las página que aparece a la derecha sel número de la parte en letras oscuras. Los productos acompañados por un (♦) han sido descontinuados por el fabricante. Esta sección si incluye componentes que no aparecen en la Guía Maestra de la sección; en otras palabras, artículos descontinuados, DTL y 54L.

Esta lista ha sido compilada por medio de recomendaciones de los fabricantes. Debido a que hay una tendencia a que cada compañía se muestre así misma como alterna a los fabricantes mas prominentes, y que los fabricantes mayores ignoren a los mas pequeños, no cada componente hace referencia de uno a otro; de tal manera que, si usted busca alternos para una compañía menos conocida, obtenga los substitutos que encuentre, más que nada si son producto de compañías prominentes, y luego refiérase a ellos para encontrar otras fuentes.

Con objeto de mantener esta lista bajo un control razonable, los sufijos A y B que denotan mejoras, no aparecen. Si esto no se hubiese hecho, por ejemplo, cada selección de memorias de alta velocidad resultaría en una componente que podría substituir otras de igual velocidad ó más lentas y este directorio terminaría dando mucha importncia a cambios insignificantes en el funcionamiento de ellos. Además, una mejora en las características solo es importante si sus circuitos lo requieren.

Una de las dificultades con cualquier referencia es que componentes que tienen como propósito ser equavalentes no necesariamente tienen el mismo rendimiento en todos los circuitos. Debido a esto, será necesario que usted determine las especificaciones, o inclusive determine las características del circuito antes de decidir que equivalente es mejor para usted. Un beneficio de esta lista es que le provee alternativas que investigar. Pero si no encuentra lo que necesita aquí, es aún posible encontrar equivalentes encontrando la componente en las Guía Maestra de Selección. En particular para circuitos digitales, los otros productos agrupados con aquel, le ofrecerá un funcionamiento igual o parecido.

© IC MASTER 1984

代替ソース ダイレクトリー

このダイレクトリーはメーカーが他とピンコンパチブルか機能的に互換性があるという製品の全業界のクロスリファレンスです。これは個々のリファレンスを多数を編集したものであり，文字通り数千の型名からは全く分らない特にリニアとかメモリといった分野で数千の代替品を記載しています。

通常の代替品がガイドと異り，このダイレクトリーは特定品種について一社丈でなく数社の代替品を記載しています。50,000のクロスリファレンスがありこれ程広くカバーしたクロスリファレンスは本書が初めてです。

使用法

第二欄は第一欄の代替品を示しています。太字で印刷されている製品はマスターセレクションガイドにデータがのっている事を示します。そのページは太字印刷の型名の右側に書いてあります。◆印が前についている製品はメーカーが生産中止した事を示します。このセクションにはマスターセレクションガイドにのっていない，生産中止した製品例えばＤＴＬとか５４製品とかも記載しています。このリストはメーカーの推せんに従って作られたものです。各メーカーにある傾向ですが自社丈が本当の代替ソースと主張したり大手は中小メーカーを無視したりするので全ての製品が互い互いに全製品にクロスリファレンスされてはいない。ですからもし利用者皆様が小さなメーカーの代替品を探す時は皆様が先ず代替品を見つけ，大手メーカーがそれを作っていればそこを調べて代替メーカを探し当てる方法をとった方が良いでしょう。

このリストをある納得されうる限界にしておく為に改良品につけられるＡとかＢとか云ったサフィックスは通常つけてありません。もしつけてあるとメモリーメーカーが主張する高速セレクションが同等かスピードの遅い製品メーカーの製品を数多く取換えてしまう結果にもなるでしょうし，このダイレクトリーが少々の性能の違いに相当の比重をかけなくてはならないようになってしまいます。更に云えば改良性能はそれを充分に利用する回路丈にしか必要ないのです。

クロスリファレンスを作る難しさの一つは代替とされる製品が応々にして全ての回路で同性能でないと云うことです。この為利用者皆様は性能表を調査するか決定する前にどの代替が回路に合うかを回路で調査されることをおすすめします。このリストの良いところは皆様に多くの代替ソースがあることを知って頂く事です。もし皆様がこのセクションで見つけられなかった場合は，マスターセレクションガイドからも見つけることが出来ます。特にディジタル回路はグループ毎の他社製品は通常似かよったあるいは同一の性能を持っています。

© IC MASTER 1984

Advanced Micro Devices

Manufacturer Device	Replacement Source	Device	IC Master Page
27128	**AMD**	**AM27128**	**3929**
	Fujitsu	MBM27128	
	Intel	27128	
	Mitsubishi	M5L27128	
		M5L27C128	
	SEEQ	5143	
29516	**Synertek**	**SY66016**	**1696**
	TRW-LSI	**MPY016H**	**1164**
		MPY16HJ	
	Weitek	WTL1016	
31L01	AMD	AM27LS02	
		AM27S02	
		AM3101	
		AM3101A	
		SN7489-1	
	Fairchild	74S289	
	Intel	3101	
	Motorola	MC4064	
	National	DM7589	
	NEC	μPB2089	
		μPB2289	
	Signetics	3101	
		3101A	
		7489	
		N8225	
		S3101	
	TI	**SN7489**	**951**
715	Fairchild	μA715	
747	Fairchild	μA747	
	Hitachi	HA17747	
	MicroPwr	MPOP04	
	Motorola	MC1747	
	National	LM747	
	NEC	μPC251	
	PMI	**OP-04**	**3566**
		PM747	
	Raytheon	RC747	
		RM747	
	RCA	CA747	
	Signetics	μA747	
	SiliconG	SG747	
	[illegible]S	747	
	TI	μA747	
7525	Fairchild	7525	
	Motorola	MC7525	
	National	LM7525	
	SiliconG	SG7525	
8035	Fujitsu	MBL8035	
	Intel	8035	
	National	INS8035	
	NEC	μPD8035	
	Signetics	SCN8035	
8041	Intel	8041A	
	NEC	μPD8041A	
8048	Fujitsu	MBL8048	
	Intel	8048	
	National	INS8048	
	NEC	μPD8048	
	Signetics	SCN8048	
	Toshiba	TMP8048	
8085	AMD	8085A	
	Intel	8085	
		8085A	
	NEC	μPD8085	
	Toshiba	TMP8085A	
8085A	AMD	8085	
	Intel	8085	
		8085A	
	NEC	μPD8085	
	Toshiba	TMP8085A	
8088	Fujitsu	MBL8088	
	Intel	8088	
8155	Intel	8155	
	NEC	μPD8155	
	Toshiba	TMP8155	
8156	Intel	8156	
	NEC	μPD8156	
8212	AMD	AM3212	
	National	DP8212	
		INS8212	
	NEC	μPB8212	
	TI	**SN74S412**	**1033**
8214	Intel	8214	
	National	INS8214	
	NEC	μPB8214	
◆8216	Intel	8216	
	National	DP8216	
		INS8216	
	NEC	μPB8216	
8224	Intel	8224	
	National	DP8224	
		INS8224	
	NEC	μPB8224	
◆8226	Intel	8226	
	National	DP8226	
		INS8226	
	NEC	μPB8226	
8228	Intel	8228	
	National	DP8228	
		INS8228	
	NEC	μPB8228	
	TI	**SN74S428**	**1034**
		TIM8228	
8238	Intel	8238	
	National	DP8238	
		INS8238	
	NEC	μPB8238	
	TI	**SN74S438**	**1034**
		TIM8238	
8243	Fujitsu	MB8243	
	Intel	8243	
	NEC	μPD8243	
	Signetics	8243	
8251	**AMD**	**AM9551**	**1436**
	Intel	8251A	
	National	DP8251	
		INS8251	
	NEC	μPB8251	
	SMC	COM8251A	
	Western	TR1983	
8253	Intel	8253	
	National	INS8253	
	NEC	μPD8253	
8255A-5	AMD	AM9555	
	Intel	8255A-5	
	National	INS8255	
	NEC	μPD8225	
		μPD8255	
8257	Intel	8257	
	NEC	μPD8257	
8279-5	Intel	8279	
	NEC	μPD8279-5	
8284	Fujitsu	MBL8284	
	Intel	8284	
	NEC	μPB8284	
8287	Intel	8287	
	NEC	μPD8287	
8288	Fujitsu	MBL8288	
	Intel	8288	
	NEC	μPB8288	
8304	AMD	DP8304	
	Fujitsu	MBL8286	
	Intel	8286	
		8304	
	National	DP8304	
	NEC	μPB8286	
8308	Motorola	MCM68A308	
	NEC	μPD2308	
8355	Intel	8355	
	NEC	μPD8355	
	Toshiba	TMP8355	
8702	Intel	8702	
9080	AMD	9080A	
		AM9080	
	Intel	8080A	
	National	DP8080A	
		INS8080A	
	NEC	μPB8286	
	TI	TMS8080	
		TMS8080A	
9080A	AMD	9080	
		AM9080	
	Intel	8080A	
	National	DP8080A	
		INS8080A	
	NEC	μPD8080	
	TI	TMS8080	
		TMS8080A	
9240	GI	RO9508	
9280	GI	RO9580	
AM1002	Mostek	MK1002	
AM100415	Fairchild	100415	
	Signetics	100415	
AM100470	Fairchild	F100470	
	Fujitsu	MBM100470	
AM100474	Fairchild	F100474	
	Hitachi	HM100474	
AM10415	Fairchild	F10415	
	Fujitsu	MBM10415	
		MCM10415	
	Hitachi	HM2110	
		(Continued)	
AM10415	Hitachi	HM2112	
	Motorola	**MCM10146**	**4046**
	National	DM10415	
	Siemens	GXB10415	
	Signetics	10415	
AM10470	Fairchild	F10470	
	Fujitsu	MBM10470	
	Hitachi	HM10470	
		HM2142	
	Motorola	**MCM10470**	**4047**
	National	DM10470	
	Signetics	10470	
AM10474	Fairchild	F10474	
	Fujitsu	MBM10474	
	Signetics	10474	
AM1408	AMD	SSS1408	
	AD	AD1408	
		ADDAC-08	
	Datel	DAC-08B	
		DAC-I8BC	
		DAC-IC8B	
		DAC-IC8BC	**2863**
	Fairchild	DAC-08	
		MA0802M	
		μA0801	
		μA0802	
	Motorola	**DAC-08**	**3069**
		MC1408	
	National	DAC0800	
		DAC0801	
		DAC0802	
		DAC0806	
		DAC0807	
		DAC0808	
	NEC	μPC624	
	PMI	DAC-08	
		DAC-1408	
	Raytheon	**DAC-08**	**3591**
	Signetics	MC1408	
AM1458	Exar	XR1458	
		XR4558	
	Fairchild	μA1458	
	Harris	HA-2655	
	Hitachi	HA17458	
	MicroPwr	MPOP14	
	Motorola	MC1458	
		MC4558C	
		RC4558	
	National	LM1458	
	NEC	μPC1458	
		μPC4558	
	PMI	PM1458	
	Raytheon	RC1458	
		RC4558	**3592**
	RCA	CA1458	
		LM1458	
		RC4558	
		SSS1458	
	Sanyo	LA6458A	
	Signetics	MC1458	
		NE4558	
	SiliconG	SG1458	
	TI	MC1458	
		RC4558	
AM1558	Exar	XR1558	
	Fairchild	μA1558	
	Harris	**HA-2650**	**3414**
	Motorola	MC1558	
		MC4558	
		RC1558	
	National	LM1558	
	PMI	**OP-14**	**3566**
		PM1558	
	Raytheon	RC1558	
		RM1558	
		RM4558	
	RCA	CA1558	
		LM1558	
		SSS1558	
	Signetics	MC1558	
	SiliconG	SG1558	
	TI	MC1558	
		RM4558	
AM1702A	National	MM1702	
AM2101A	AMD	AM9101	
	Intel	8101A	
	NEC	μPD2101	
	Synertek	SY2101	
AM2111A	AMD	AM9111	
	Intel	8111	
	NEC	μPD2111	
	Synertek	SY2111	
AM2112	AMD	AM9112	
	Synertek	SY2112	
	TI	TMS4043	
AM2147	AMI	4017	
	Fujitsu	MBM2147	
	Hitachi	HM4847	
	Intel	2147	
	Intersil	IM2147	
	ITT	4547	
	Motorola	MCM2147	
	National	MM2147	
	NEC	μPD2147	
	Synertek	SY2147	
	TI	TMS2147	
	Toshiba	TMM315	
	Universal	UM2147	
AM2148	Fairchild	93475	
	Fujitsu	MBM2148	
		MBM2149	
	Hitachi	HM6148	
	Intel	2148H	
		2149H	
	National	NMC2148	
	Synertek	SY2148	
		SY2149	
AM2167	Hitachi	HM6167	
	IMS	IMS1400	
	IDT	IDT6167	
	Intel	2167	
	ITT	2167	
	Mitel	M58757	
	Mitsubishi	M5M2167	
	NEC	**μPD2167**	**4086**
	Synertek	**SY2167**	**4210**
	TI	TMS2167	
AM2168	AMD	AM2169	
	Fujitsu	MB8168	
	Hitachi	HM6168	
	IMS	IMS1420	
		IMS1421	
	Intel	2168	
	Mitsubishi	M5M2168	
	Synertek	**SY2168**	**4210**
	TI	TMS2168	
		TMS2169	
AM2169	AMD	AM2168	
	Fujitsu	MB8168	
	Hitachi	HM6168	
	IMS	IMS1420	
		IMS1421	
	Intel	2168	
	Mitsubishi	M5M2168	
	Synertek	**SY2168**	**4210**
	TI	TMS2168	
		TMS2169	
AM24S374	MMI	74S532	
AM25LS2521	**TI**	**SN74LS688**	**1088**
AM25LS273	Fairchild	74LS273	
	MMI	**SN74LS273**	**804**
	Motorola	SN74LS273	
	SGS	T74LS273	
	Signetics	74LS273	
	TI	**SN74LS273**	**1007**
AM25LS273M	Fairchild	54LS273	
	MMI	**SN54LS273**	**804**
	Motorola	SN54LS273	
	Signetics	**54LS273**	**530**
	TI	**SN54LS273**	**1007**
AM25LS377	Fairchild	74LS377	
	MMI	**SN74LS377**	**804**
	Motorola	SN74LS377	
	SGS	T74LS377	
	Signetics	74LS377	
	TI	**SN74LS377**	**1027**
AM25LS377M	Fairchild	54LS377	
	MMI	**SN54LS377**	**804**
	Motorola	SN54LS377	
	Signetics	**54LS377**	**530**
	TI	**SN54LS377**	**1027**
AM25LS533	MMI	74LS533	
AM25LS533M	MMI	54LS533	
AM25S374M	MMI	54S532	
AM25S533	MMI	74S533	
AM25S533M	MMI	54S533	
AM25S534	MMI	74S536	
AM25S534M	MMI	54S536	
AM25S535	MMI	74S535	
AM25S558	Fairchild	74F558	
	MMI	74S558	
AM25S558M	MMI	54S558	

◆ Discontinued

Bold face device numbers indicate manufacturers data is provided in the IC Master on the pages noted.

© IC MASTER 1984

Advanced Micro Devices (Cont'd)

Manufacturer Device	Replacement Source	Device	IC Master Page
AM26LS31	**Motorola**	**AM26LS31**	**3064**
	National	DS26LS31	
	TI	AM26LS31	
AM26LS33	TI	AM26LS33	
AM26S10	Fairchild	9640	
	Motorola	DC26S10	
	National	DS26S10	
	TI	AM26S10	
AM26S11	National	DS26S11	
	TI	AM26S11	
AM2708	Hitachi	HN462708	
	Motorola	MC27A08	
		MCM2708	
	National	MM2708	
	Panasonic	MN2708	
	Rockwell	2708	
	TI	TMS2708	
AM27128	AMD	27128	
	Fujitsu	MBM27128	
	Intel	27128	
	Mitsubishi	M5L27128	
		M5L27C128	
	SEEQ	5143	
AM2716	Fujitsu	MB2716	
	Hitachi	HN462716	
	Intel	2716	
	Mostek	MK2716	
	Motorola	MCM2716	
	National	MM2716	
	NEC	μPD2716	
	OKI	**MSM2716**	**4118**
	Panasonic	MN2716	
	SGS	M2716	
	TI	TMS2516	
AM27256	**Intel**	**27256**	**4025**
AM2732	Hitachi	HN462732	
	Intel	2732	
		2732A	
		M2732	
	Mitsubishi	M5L2732	
	National	MM2732	
		NMC2732	
	NEC	μPD2732	
	Toshiba	TMM2732	
		TMM324C	
	Universal	UM2732	
AM2764	Fujitsu	MBM2764	
	Hitachi	HN482764	
	Intel	2764	
		M2764	
	Intersil	IM2764	
	Mitel	M5L2764	
	Mitsubishi	M5L2764	
	Mostek	MK2764	
	National	NMC2764	
	NEC	μPD2764	
	SEEQ	5133	
	Toshiba	TMM2764	
AM27LS00	Fairchild	93421	
		93L420	
		93L421	
	Intel	3106	
	Motorola	MC4256	
	National	93L420	
		93L421	
		DM74S200	
	NEC	μPB2200	
	Signetics	74200	
		N82S116	
		N82S16	
	TI	SN74LS200	
		SN74S200	
		SN74S201	**993**
AM27LS01	AMD	AM29720	
	Fairchild	93411	
		93L411	
	Intel	3107	
	National	DM74S206	
		N82S117	
		N82S17	
	Signetics	74S301	
		N82S17	
	TI	SN74206	
		SN74S301	**1016**
AM27LS02	AMD	31L01	
		AM27S02	
		AM3101	
		AM3101A	
		SN7489-1	
		(Continued)	

Manufacturer Device	Replacement Source	Device	IC Master Page
AM27LS02	Fairchild	74S289	
	Intel	3101	
	Motorola	MC4064	
	National	DM7589	
	NEC	μPB2089	
		μPB2289	
	Signetics	3101	
		3101A	
		7489	
		N8225	
		S3101	
	TI	**SN7489**	**951**
AM27LS03	AMD	AM27S03	
		SN74S189	
	Fairchild	74S189	
		93405	
	Hitachi	HD74S189	
	National	DM74S189	
		DM7599	
		DM8599	
	Signetics	74S189	
	TI	SN74S189	
AM27LS18	MMI	5330-1	
		53LS080	
		63LS080	
	National	**DM54S188**	**4057**
		DM7577	
	Signetics	**S82S23**	**532**
AM27LS19	AMD	AM27S19	
	Harris	HM7603	
	MMI	5331-1	
		53S081	**4026**
		6331-1	
		63S081	**4026**
	National	**DM74S288**	**4057**
		DM8578	
	Signetics	N82S123	
		S82S123	**532**
	TI	**TBP18S030**	**542,4237**
AM27PS181	AMD	AM27S181	
		AM27S281	
	Fairchild	93Z451	
		F93451	
	Fujitsu	MB7132	
	Harris	HM7681	
	Hitachi	HN25089	
	Intel	3628	
		3628A	
		3628B	
	MMI	6381-1	
	Motorola	**MCM7681**	**4047**
	National	**DM87S181**	**4057**
		DM87S228	
	NEC	μPB417	
	Raytheon	29631	
		29631A	**4131**
		29633	
	Signetics	825181	
		N82HS181	
		N82S181	
	Supertex	SM82S181	
	TI	TBP28S86	
AM27PS185	Fujitsu	MB7134	
		MB7152	
	Harris	HM76165	
	MMI	**63S441**	**4026**
	Motorola	**MCM76165**	**4047**
	NEC	μPB426	
	Raytheon	29653	
	Signetics	N82HS195	
		N82S195	**4182**
AM27PS191	AMD	AM27S191	
	Fairchild	93511	
		93Z511	
	Fujitsu	MB7138	
		MB7138E-W	
	Harris	HM76161	
	Hitachi	HN25169	
	MMI	**63S1681**	**4026**
	Motorola	**MCM76161**	**4047**
	National	**DM87S191**	**4057**
	NEC	μPB429	
	Raytheon	**29681**	**4131**
		29681A	**4131**
	Signetics	N82S191	
	TI	**TBP28S166**	**4247**
AM27S02	AMD	31L01	
		AM27LS02	
		AM3101	
		AM3101A	
		SN7489-1	
		(Continued)	

Manufacturer Device	Replacement Source	Device	IC Master Page
AM27S02	Fairchild	74S289	
	Intel	3101	
	Motorola	MC4064	
	National	DM7589	
	NEC	μPB2089	
		μPB2289	
	Signetics	3101	
		3101A	
		7489	
		N8225	
		S3101	
	TI	**SN7489**	**951**
AM27S03	AMD	AM27LS03	
		SN74S189	
	Fairchild	74S189	
		93405	
	Hitachi	HD74S189	
	National	DM74S189	
		DM7599	
		DM8599	
	Signetics	74S189	
	TI	SN74S189	
AM27S11	AMD	AM27S21	
	Harris	HM7611	
	Intersil	IM5623	
	MMI	6301-1	
		63S141	**4026**
	National	**DM74S287**	**4057**
	Signetics	N82S129	
	TI	**TBP24S10**	**542,4238**
AM27S12	Fairchild	93436	
	Harris	HM7620	
	MMI	6305-1	
		63S240	**4026**
	National	**DM74S570**	**4057**
	Signetics	N82S130	
AM27S13	Fairchild	93446	
	Harris	HM7621	
	Intel	3622	
	MMI	6306-1	
		63S241	**4026**
	Motorola	**MCM7621**	**4047**
	National	**DM74S571**	**4057**
	Raytheon	**29611**	**4131**
	Signetics	N82S131	
	TI	SN74S571	
AM27S15	Harris	HM7647R	
	Signetics	N82S115	
AM27S18	Harris	HM7602	
	MMI	6330-1	
		63S080	**4026**
	National	**DM74S188**	**4057**
		DM7588	
		DM8577	
	Signetics	N82S23	
	TI	TBP18SA030	
		TBPSA030M	
AM27S180	AMD	AM27S280	
	Fairchild	93450	
		93Z450	
	Fujitsu	MB7131	
	Hitachi	HN25088	
	Intel	3608	
	MMI	6380-1	
	National	**DM87S180**	**4057**
		DM87S229	
	NEC	μPB408	
	Signetics	N82S180	
	TI	TBP28SA86	
AM27S181	AMD	AM27PS181	
		AM27S281	
	Fairchild	93Z451	
		F93451	
	Fujitsu	MB7132	
	Harris	HM7681	
	Hitachi	HN25089	
	Intel	3628	
		3628A	
		3628B	
	MMI	6381-1	
	Motorola	**MCM7681**	**4047**
	National	**DM87S181**	**4057**
		DM87S228	
	NEC	μPB417	
	Raytheon	29631	
		29631A	**4131**
		29633	
	Signetics	825181	
		N82HS181	
		N82S181	
		(Continued)	

Manufacturer Device	Replacement Source	Device	IC Master Page
AM27S181	Supertex	SM82S181	
	TI	TBP28S86	
AM27S181M	Fairchild	93451M	
	Fujitsu	MB7132-W	
		MB7132E-W	
	Harris	**HM7681-2**	**3949**
	MMI	5381-1	
	National	**DM77S181**	**4057**
	Raytheon	29631AM	
	Signetics	S82HS181	
		S82S181	**532**
	TI	TBP28S86M	
AM27S184	Fujitsu	MB7127	
	Harris	HM7684	
	Hitachi	HM25045	
	MMI	6388	
		6388-1	
	National	**DM87S184**	**4057**
	Signetics	N82S184	
	TI	**TBP24SA81**	**4240**
AM27S185	Fujitsu	MB7128	
	Harris	HM7685	
	Hitachi	HN25085	
	MMI	6389	
		6389-1	
		63S841	**4026**
	Motorola	**MCM7685**	**4047**
	National	**DM87S185**	**4057**
	Raytheon	29651	
		29651A	**4131**
	Signetics	N82HS185	
		N82S185	
	TI	**TBP24S81**	**542,4239**
AM27S19	AMD	AM27LS19	
	Harris	HM7603	
	MMI	5331-1	
		53S081	**4026**
		6331-1	
		63S081	**4026**
	National	**DM74S288**	**4057**
		DM8578	
	Signetics	N82S123	
		S82S123	**532**
	TI	**TBP18S030**	**542,4237**
AM27S190	Fairchild	93510	
		93Z510	
	Fujitsu	MB7137	
		MB7137E-W	
	Harris	HM76160	
	Hitachi	HN25168	
	MMI	**63S1681**	**4026**
	Motorola	MCM6160	
	National	**DM87S190**	**4057**
	NEC	μPB409	
	Raytheon	**29683**	**4131**
	Signetics	N82S190	
	TI	TBP28SA166	
AM27S191	AMD	AM27PS191	
	Fairchild	93511	
		93Z511	
	Fujitsu	MB7138	
		MB7138E-W	
	Harris	HM76161	
	Hitachi	HN25169	
	MMI	**63S1681**	**4026**
	Motorola	**MCM76161**	**4047**
	National	**DM87S191**	**4057**
	NEC	μPB429	
	Raytheon	**29681**	**4131**
		29681A	**4131**
	Signetics	N82S191	
	TI	**TBP28S166**	**4247**
AM27S20	Fairchild	93417	
	Harris	HM7610	
	MMI	6300-1	
		63S140	**4026**
	National	**DM74S387**	**4057**
	Signetics	N82S126	
	TI	**TBP24SA10**	**542,4238**
AM27S21	AMD	AM27S11	
	Harris	HM7611	
	Intersil	IM5623	
	MMI	6301-1	
		63S141	**4026**
	National	**DM74S287**	**4057**
	Signetics	N82S129	
	TI	**TBP24S10**	**542,4238**

◆ Discontinued

The manufacturers report their devices can be used as direct replacements.
Performance details often differ, so compare the specifications considering your requirements.

Advanced Micro Devices (Cont'd)

Manufacturer Device	Replacement Source	Device	IC Master Page
AM27S28	Fujitsu	MB7123	
	MMI	6348-1	
	National	**DM74S473**	**4057**
	Signetics	N82S146	
	TI	**TBP28SA42**	**4245**
AM27S280	AMD	AM27S180	
	Fairchild	93450	
		93Z450	
	Fujitsu	MB7131	
	Hitachi	HN25088	
	Intel	3608	
	MMI	6380-1	
	National	**DM87S180**	**4057**
		DM87S229	
	NEC	μPB408	
	Signetics	N82S180	
	TI	TBP28SA86	
AM27S281	AMD	AM27PS181	
		AM27S181	
	Fairchild	93Z451	
		F93451	
	Fujitsu	MB7132	
	Harris	HM7681	
	Hitachi	HN25089	
	Intel	3628	
		3628A	
		3628B	
	MMI	6381-1	
	Motorola	**MCM7681**	**4047**
	National	**DM87S181**	**4057**
		DM87S228	
	NEC	μPB417	
	Raytheon	29631	
		29631A	**4131**
		29633	
	Signetics	825181	
		N82HS181	
		N82S181	
	Supertex	SM82S181	
	TI	TBP28S86	
AM27S29	Fujitsu	MB7124	
	Harris	HM7649	
	MMI	6349-1	
	Motorola	**MCM7649**	**4047**
	National	**DM74S472**	**4057**
	Raytheon	**29621**	**4131**
	Signetics	N82S147	
	TI	**TBP28S42**	**542,4244**
		TBP28S42M	**542,4244**
AM27S30	Fairchild	93438	
	Harris	HM7640	
	MMI	6340-1	
	National	**DM74S475**	**4057**
		DM77S475	
		DM87S475	
	Signetics	N82S140	
	TI	**TBP28SA46**	**4245**
AM27S31	Fairchild	93448	
	Fujitsu	MB7126	
	Harris	HM7641	
	MMI	6341-1	
	Motorola	**MCM7641**	**4047**
	National	**DM74S474**	**4057**
	Signetics	N82S141	
	TI	**TBP28S46**	**542,543,4245**
AM27S32	Fairchild	93452	
	Fujitsu	MB7121	
	Harris	HM7642	
	Hitachi	HN25044	
	MMI	6352-1	
	Motorola	MCM7642	
	National	**DM74S572**	**4057**
	NEC	μPB406	
	Signetics	N82S136	
	TI	**TBP24SA41**	**4239**
AM27S33	Fairchild	93453C	
	Fujitsu	MB7122	
	Harris	HM7643	
		HM7643A	
	MMI	5353-1	
		6353-1	
	Motorola	**MCM7643**	**4047**
	National	**DM74S573**	**4057**
	Signetics	N72HS137	
		N82S137	**4172**

(Continued)

Manufacturer Device	Replacement Source	Device	IC Master Page
AM27S33	**Signetics**	**S82S195**	**4182**
	TI	**TBP24S41**	**542,4239**
AM27S33M	**AMD**	**AM27S41**	**3907**
	Fairchild	93453M	
	Fujitsu	MB7122E-W	
		MB7152E-W	
	Harris	**HM7643-2**	**3948**
	MMI	**53S441**	**4026**
	Motorola	MCM7643M	
	National	**DM54S573**	**4057**
		DM54S573A	**4057**
	Signetics	S82HS137	
		S82S137	**532**
		S82S195	**4182**
	TI	**TBP24S41M**	**542,4239**
AM27S35	**AMD**	**AM27S37**	**3901**
	National	DM87SR81	
	Synertek	**SY3308**	**4211**
AM27S37	AMD	AM27S35	
	National	DM87SR81	
	Synertek	**SY3308**	**4211**
AM27S40	Fujitsu	MB7151	
AM27S41	AMD	AM27S33M	
	Fairchild	93453M	
	Fujitsu	MB7122E-W	
		MB7152E-W	
	Harris	**HM7643-2**	**3948**
	~~**MMI**~~	~~**53S441**~~	~~**4026**~~
	Motorola	MCM7643M	
	National	**DM54S573**	**4057**
		DM54S573A	**4057**
	Signetics	S82HS137	
		S82S137	**532**
		S82S195	**4182**
	TI	**TBP24S41M**	**542,4239**
AM27S43	Fujitsu	MB7142	
	Harris	76321	
		HM76321	
	Intel	3632	
	MMI	**53S3281**	**4026**
		63S3281	**4026**
	National	87S321	
		DM87S321	**4057**
	Raytheon	**29671**	**4131**
	Signetics	N82S321	
AM27S45	**AMD**	**AM27S47**	**3904**
	Synertek	**SY3316**	**4211**
AM27S47	**AMD**	**AM27S45**	**3904**
	Synertek	**SY3316**	**4211**
AM27S49	Fairchild	93Z565	
AM27S65	MMI	53DA441	
		63DA441	
AM27S75	MMI	53DA841	
		63DA841	
AM27S85	MMI	53DA1643	
		63DA1643	
AM2812	Plessey	MP3812	
AM2841	Fairchild	3341A	
AM2847	Fairchild	F2847	
AM28LS32	National	DS26LS32	
	TI	AM26LS32	
AM2901B	Fairchild	29F01	
		F2901A	
	National	IDM2901A	
AM2909	National	IDM2909	
AM2910	Fairchild	29F10	
		F2910	
	Motorola	MC2910	
AM2911	National	IDM2911	
AM29516	TRW-LSI	MPY016	
	Weitek	WTL1516	
		WTL9516	
AM29517	Weitek	WTL1517	
		WTL9517	
AM2965	MMI	74S730	
AM2965M	MMI	54S730	
AM2966	MMI	74S734	
AM2966M	MMI	54S734	
AM2968	**Motorola**	**MC74F2968**	**822**
AM2969	**Motorola**	**MC74F2969**	**822**
AM2970	**Motorola**	**MC74F2970**	**822**
AM29702	National	IDM29702	
AM29703	National	IDM29703	
AM29704	Fairchild	29704	
AM29705	Fairchild	29705	
		29F705	
	National	IDM29705	
AM29720	AMD	AM27LS01	
	Fairchild	93411	

(Continued)

Manufacturer Device	Replacement Source	Device	IC Master Page
AM29720	Fairchild	93L411	
	Intel	3107	
	National	DM74S206	
		N82S117	
		N82S17	
	Signetics	74S301	
		N82S17	
	TI	SN74206	
		SN74S301	**1016**
AM29821	**TI**	**SN74AS821**	**1096**
AM29822	**TI**	**SN74AS822**	**1096**
AM29823	**TI**	**SN74AS823**	**1096**
AM29824	**TI**	**SN74AS824**	**1097**
AM29825	**TI**	**SN74AS825**	**1097**
AM29826	**TI**	**SN74AS826**	**1097**
AM29827	TI	SN74AS827	
AM29828	TI	SN74AS828	
AM29833	TI	SN74AS833	
AM29834	TI	SN74AS834	
AM29841	**TI**	**SN74AS841**	**1098**
AM29843	**TI**	**SN74AS843**	**1099**
AM29844	**TI**	**SN74AS844**	**1099**
AM29845	**TI**	**SN74AS845**	**1099**
AM29846	**TI**	**SN74AS846**	**1100**
AM29853	TI	SN74AS853	
AM29854	TI	SN74AS854	
AM29861	TI	SN74AS861	
AM29862	TI	SN74AS862	
AM29863	TI	SN74AS863	
~~AM29864~~	~~TI~~	~~SN74AS864~~	
AM29L510	**TRW-LSI**	**TDC1010**	**1164**
AM3101	AMD	31L01	
		AM27LS02	
		AM27S02	
		AM3101A	
		SN7489-1	
	Fairchild	74S289	
	Intel	3101	
	Motorola	MC4064	
	National	DM7589	
	NEC	μPB2089	
		μPB2289	
	Signetics	3101	
		3101A	
		7489	
		N8225	
		S3101	
	TI	**SN7489**	**951**
AM3101A	AMD	31L01	
		AM27LS02	
		AM27S02	
		AM3101	
		SN7489-1	
	Fairchild	74S289	
	Intel	3101	
	Motorola	MC4064	
	National	DM7589	
	NEC	μPB2089	
		μPB2289	
	Signetics	3101	
		3101A	
		7489	
		N8225	
		S3101	
	TI	**SN7489**	**951**
AM3212	AMD	8212	
	National	DP8212	
		INS8212	
	NEC	μPB8212	
	TI	**SN74S412**	**1033**
AM3216	Intel	3216	
AM3226	Intel	3226	
AM3341	Fairchild	3341	
	MMI	67401	
	National	87S401	
AM3705	**Siliconix**	**SI3705**	**3082**
AM4702	Intel	4702	
AM5056	National	MM5066	
◆AM592	Fairchild	μA733	
	Hitachi	HA17733	
	Intersil	μA733	
	Motorola	MC1733	
		NE592	
	National	LM733	
	Signetics	μA733	
	SiliconG	SG733	
	TI	μA733	
AM6012	AD	AD562	
	Burr-Brown	DAC862	
	Datel	DAC-562	
	Harris	HI562	
	MCE	MCE-6012	

(Continued)

Manufacturer Device	Replacement Source	Device	IC Master Page
AM6012	MicroPwr	MP562	
	Motorola	**AD562**	**3069**
	NEC	μPC6012	
		μPC648	
	PMI	DAC-312	
		DAC312B12	
	Raytheon	DAC-6012	
		DAC6012	
	Signetics	**AM6012**	**3605**
	TeledyneP	4068	
AM6080	**Signetics**	**SE5019**	**3607**
		SE5118	
		SE5119	**3611**
AM6081	Datel	DAC-UP8B	
	Signetics	NE5018	
		NE5019	**3607**
		NE5118	
		NE5119	**3611**
AM6420	Harris	HA5320	
AM74LS534	AMD	SN74LS534	
	Fairchild	74LS534	
	MMI	**SN74LS534**	**804**
AM74S534	MMI	74S534	
	Signetics	74S534	
AM8282	AMD	AM8283	
	Fujitsu	MBL8283	
	Intel	8283	
	NEC	μPB8283	
AM8283	AMD	AM8282	
	Fujitsu	MBL8283	
	Intel	8283	
	NEC	μPB8283	
AM9016	Fairchild	F4116	
	Hitachi	HM4716	
	Intel	2118	
	Intersil	IM7116	
	ITT	ITT4116	
	Mostek	MK4116	
	Motorola	MCM4116	
	National	MM5290	
	NEC	**μPD416**	**4073**
	Panasonic	MN4116	
	SGS	M4116	
	Siemens	HYB4116	
	Signetics	2690	
	TI	TMS4116	
AM9044	National	NMC5257A	
AM9080	AMD	9080	
		9080A	
	Intel	8080A	
	National	DP8080A	
		INS8080A	
	NEC	μPD8080	
	TI	TMS8080	
		TMS8080A	
AM9101	AMD	AM2101A	
	Intel	8101A	
	NEC	μPD2101	
	Synertek	SY2101	
◆AM9102	Fairchild	2102H	
	National	MM2102A	
	Panasonic	MN2102	
	SGS	M2102A	
AM9111	AMD	AM2111A	
	Intel	8111	
	NEC	μPD2111	
	Synertek	SY2111	
AM9112	AMD	AM2112	
	Synertek	SY2112	
	TI	TMS4043	
AM9128	Fairchild	F3528	
	Fujitsu	MB8128	
	Intel	2128	
	Motorola	MCM2016	
	National	NMC2116	
	OKI	**MSM5128**	**4118**
	Synertek	SY2128	
		SY2129	
	TI	TMS4016	
	Toshiba	TMM2016	
AM92128	**AMI**	**S23128**	**3935**
	GI	RO9128	
	Hitachi	HN613128	
	Motorola	MCM63128	
	National	S2128	
	NCR	NCR23128	
	NEC	μPD2/83128	
		μPD23/83128	
	OKI	**MSM38128**	**4118**
	Signetics	**23128-30**	**4202**
	Synertek	SY23128	
	VTI	**VT23128**	**4252**

◆ Discontinued

Bold face device numbers indicate manufacturers data is provided in the IC Master on the pages noted.

Advanced Micro Devices (Cont'd)

Manufacturer Device	Replacement Source	Device	IC Master Page
AM9218	Fairchild	3516	
		68316	
		F3516	
		F35316	
		F68316	**1464**
	GI	R03-9316	
	GTEMicro	2316	
	Intel	2316	
	Mostek	MK34000	
	Motorola	MCM68316	
		MCM68A316	
		MM2316	
	National	MM52116	
		MM5258	
	NCR	2316	
		NCR2316	
	NEC	μPD2316	
	OKI	**MSM2916**	**4118**
	Rockwell	R2316	
	SGS	M2316	
	TI	SBP8316	
	Toshiba	TMM331A	
		TMM334	
AM92256	Fujitsu	MB83256	
	GI	R09256	
	Hitachi	HN613256	
	MicroPwr	MP2326	
	Mostek	MK38000	
	Motorola	MCM63256	
	NCR	23256	
	NEC	μPD2/83256	
		μPD23/83256	
	SMOS	SMM2326	
	Signetics	23256	
	Synertek	SY23256	
	Toshiba	TMM23256	
AM9232	AMI	S68322	
		S68A332	
	Fairchild	F3532	
	GI	R094132	
		~~T094132~~	
	GTEMicro	2332	
	Hitachi	HN46332	
	Intersil	IM7332	
	Motorola	MC68332	
		MCM68332	
		MCM68A332	**4048**
	National	MM52132	
	NCR	2332	
		NCR2332	
	NEC	**μPD2332**	**4100**
	OKI	**MSM2932**	**4118**
	RCA	**CDM5333**	**1593**
	Rockwell	R2332	
	SiliconG	SG3532	
	SSS	SCM23C32	
	SMC	ROM4732	
	Synertek	**SY2332**	**4211**
	TI	**TMS4732**	**4226**
	Toshiba	TM2332	
		TMM333	
	Universal	UM2332	
	VTI	**VT2332**	**4249**
AM9233	**AMI**	**S2333**	**3932**
	Fairchild	F3533	
	GI	R09433	
	Intel	2332	
	NCR	2333	
		NCR2333	
	RCA	**CDM5332**	**1593**
	Signetics	2332	
	SSS	SCM23C33	
	Synertek	**SY2333**	**4211**
	Universal	UM2333-45	
	VTI	**VT2333**	**4249**
AM9264	AMI	S4264	
		S68A364	**3933**
	GTEMicro	2364-3	
	Hitachi	HN48364	
	Mostek	MK36000-5	
	Motorola	MCM68365	
		MCM68366	
	National	MM52164	
	NCR	2364	
	NEC	μPD2/8364-30	
		μPD23/8364-30	
	OKI	MSM2965	
	Signetics	2664A-30	
	Synertek	**SY2364-3**	**4211**

(Continued)

Manufacturer Device	Replacement Source	Device	IC Master Page
AM9264	Toshiba	TMM2364	
	Weitek	SC8164	
AM92640	**AMI**	**S68B364**	**3933**
	Fairchild	**F3564-25**	**1465**
	GTEMicro	G5364	
	Mostek	MK36000-4	
	Motorola	MCM67365-25	
	NEC	μPD2/8364-20	
		μPD23/8364-20	
	Signetics	2064-20	
	Synertek	SY2364-2	
AM9265	GI	R09864	
	GTEMicro	G5365	
	Hitachi	HN61364	
	Mostek	MK37000	
	RCA	CDM5365	
	~~**Signetics**~~	~~**2364-20**~~	~~**4195**~~
	Synertek	**SY2365**	**4211**
	Toshiba	TMM2365	
	VTI	**VT2365**	**4251**
AM93412	Fairchild	93412	
AM93415	AMI	4015	
	Fairchild	93415	
	Fujitsu	MBM93415	
	Hitachi	HM2510	
		HM2511	
	Intel	2115A	
	Motorola	MCM2115	
	Signetics	N82S10	
		S82S10	
	TI	SN54S314	
		SN74S314	
AM93422	Fairchild	93422	
	Motorola	**MCM93422**	**4046**
AM93425	AMI	4025	
	Fairchild	93425A	
AM93L412	Fairchild	97L412	
AM93L422	Fairchild	93L422	
	Motorola	**MCM93L422**	**4046**
AM9511	**AMD**	**AM9511A**	**1440**
	Intel	8231	
		MC8231	
AM9511A	**AMD**	**AM9511**	**1440**
	Intel	8231	
		MC8231	
AM9512	Intel	8232	
AM9517	**AMD**	**AM9517A**	**1438,1443**
	Intel	8237	
AM9517A	AMD	AM9517	
	Intel	8237	
AM9517A-4	Intel	8237A-4	
AM9517A-5	Intel	8237A-5	
AM9551	AMD	8251	
	Intel	8251A	
	National	DP8251	
		INS8251	
	NEC	μPB8251	
	SMC	COM8251A	
	Western	TR1983	
AM9555	AMD	8255A-5	
	Intel	8255A-5	
	National	INS8255	
	NEC	μPD8225	
		μPD8255	
AM9685	Plessey	SP9685	
AM9687	Plessey	SP9687	
AM9708	Fairchild	F68708	
	Motorola	MCM68708	
AMD264	NEC	μPD2/8364-35	
		μPD23/8364-35	
AMPAL26H8	Harris	MPL77215/16H8	
AMPAL26L8	TI	SN74PL16L8	
AMPAL26R4	TI	SN74PL16R4	
D8039	Fujitsu	MBL8039	
	Intel	8039	
	National	INS8039	
	NEC	μPD8039	
	Signetics	SCN8039	
D8086	AMD	MD8086	
	Fujitsu	MBL8086	
	Intel	8086	
		MD8086	
	NEC	μPD8086	
D8259	Fujitsu	MBL8259	
	Intel	8259	
	National	INS8259	
	NEC	μPD8259	
◆DM71LS95	National	DM71LS95	
◆DM71LS96	National	DM71LS96	
◆DM71LS97	National	DM71LS97	
◆DM71LS98	National	DM71LS98	

Manufacturer Device	Replacement Source	Device	IC Master Page
DP8303	National	DP8303	
DP8304	AMD	8304	
	Fujitsu	MBL8286	
	Intel	8286	
		8304	
	National	DP8304	
	NEC	μPB8286	
DP8307	National	DP8307	
DS7838	National	DS7838	
◆DS8838	Motorola	MC3438	
	National	DS8838	
	Signetics	**N8T38**	**876**
LF155	Intersil	LF155	
	Motorola	LF155	
	National	LF155	
	PMI	OP-15	
		PM155	
	Thomson-CSF	TDC0155	
LF156	Intersil	LF156	
	MicroPwr	OP-16	
	National	LF156	
	PMI	OP-16	
		PM156	
	Thomson-CSF	TDC0156	
LF157	Intersil	LF157	
	MicroPwr	OP-17	
	National	LF157	
	PMI	OP-17	
		PM157	
	Signetics	LF157	
	Thomson-CSF	TDC0157	
LF255	National	LF255	
	PMI	PM255	
	Thomson-CSF	TDE0155	
LF256	National	LF256	
	Thomson-CSF	TDE0156	
LF257	National	LF257	
	Thomson-CSF	TDE0157	
LF355	Intersil	LF355	
	Motorola	LF355	
	National	LF355	
	PMI	PM355	
LF356	Intersil	LF356	
	Motorola	LF356	
	National	LF356	
	PMI	PM356	
	Signetics	LF356	
LF357	AnalogSys	LF357	
	Intersil	LF357	
	Motorola	LF357	
	National	LF357	
	PMI	PM357	
LH2101	Intersil	LH2101	
	National	LH2101	
	Raytheon	LH2101	
LH2111	Intersil	LH2111	
	National	LH2111	
	Raytheon	LH2111	
LH2201	National	LH2201	
	Raytheon	LH2201	
LH2211	National	LH2211	
LH2301	Intersil	LH2301	
	National	LH2301	
LH2311	Intersil	LH2311	
	National	LH2311	
LM101	AD	AD101	
	Fairchild	μA101	
	Intersil	AD101	
	LinearTech	LM101	
	Motorola	LM101	
	Raytheon	LM101	
	SiliconG	SG101	
	TI	LM101	
	Thomson-CSF	SFC2101	
LM105	Fairchild	μA105	
	Intersil	LM105	
	National	LM105	
	SiliconG	SG105	
	Thomson-CSF	SFC2105	
LM107	**AD**	**AD741S**	**3351**
	Intersil	LM107	
	LinearTech	LM107	
	National	LM107	
	Raytheon	LM107	
	SiliconG	SG107	

(Continued)

Manufacturer Device	Replacement Source	Device	IC Master Page
LM107	TI	LM107	
	Thomson-CSF	SFC2107	
LM108	**AD**	**AD108**	**3351**
	Fairchild	μA108	
		μA725	
	Intel	ISBC108	
	Intersil	ICL108	
		LM108	
	LinearTech	LM108	
		LM108A	
		OP-05	
	MicroPwr	MP5501	
		MP5505	
		MPLM108A	
		OP-08	
	~~Motorola~~	~~LM108~~	
	National	LM108	
		LM108A	
	NEC	μPC154	
	PMI	OP-01	
		OP-05	**3566**
		OP-06	
		OP-07	**3566**
		PM108	
		PM725	
	Raytheon	**OP-05**	**3592**
		OP-07	**3592**
		RC725	
		RM725	
	Signetics	LM108	
LM110	Intersil	LM110	
	National	LM110	
	SiliconG	SG110	
LM111	AD	AD111	
	Fairchild	μA111	
	Intersil	LM111	
	Motorola	LM111	
	National	LM111	
	Raytheon	LM111	
	Signetics	LM111	
	SiliconG	SG111	
	TI	LM111	
	~~Thomson-CSF~~	~~SFC2111~~	
LM112	National	LM112	
LM118	LinearTech	LM118	
	National	LM118	
	TI	LM118	
LM119	National	LM119	
	Signetics	LM119	
LM124A	Motorola	LM124A	
	National	LM124A	
	RCA	CA124A	
	Signetics	LM124A	
	SiliconG	SG124	
	TI	LM124A	
LM139	Fairchild	μA139	
	Motorola	LM139	
	National	LM139	
	PMI	CMP-04	
		PM139	
	Raytheon	LM139	
	RCA	**CA139**	**3599**
	Signetics	LM139	
	SiliconG	SG139	
	TI	LM139	
LM139A	Motorola	LM139A	
	National	LM139A	
	PMI	CMP-04	
		PM139A	
	RCA	**CA139A**	**3599**
	SiliconG	SG139A	
	TI	LM139A	
LM148	National	LM148	
	Raytheon	LM148	
		RM4156	
	TI	LM148	
LM149	National	LM149	
LM201	AD	AD201	
	Fairchild	μA201	
		μA748	
	Intersil	LM748	
		μA748	
	Motorola	LM201	
		MC1748	
	National	LM201	
		LM748	
	Plessey	SL748	
	RCA	CA201	
		CA748	
		LM748	

(Continued)

◆ Discontinued

The manufacturers report their devices can be used as direct replacements.
Performance details often differ, so compare the specifications considering your requirements.

Advanced Micro Devices (Cont'd)

Manufacturer Device	Replacement Source	Device	IC Master Page
LM201	SiliconG	SG201	
		SG748	
	TI	LM201	
		SN72748P	
		μA748	
	Thomson-CSF		
		SFC2201	
		SFC2748	
LM202	National	LM202	
	SiliconG	SG202	
LM205	National	LM205	
	SiliconG	SG205	
	Thomson-CSF		
		SFC2205	
LM207	National	LM207	
	RCA	CA207	
	SiliconG	SG207	
	TI	SN55207	
	Thomson-CSF		
		SFC2207	
LM208	**AD**	**AD208**	**3351**
	Fairchild	μA208	
	LinearTech	OP-05	
	MicroPwr	MP5505	
		MP5508	**3529**
		MPLM208	**3529**
	Motorola	LM208	
	National	LM208	
	PMI	**OP-05**	**3566**
		PM208	
	Raytheon	**OP-05**	**3592**
	SiliconG	SG208	
	TI	μA714	
	Thomson-CSF		
		SFC2208	
LM209	Fairchild	μA209	
	Lambda	LLM209	
	Motorola	LM209	
	National	LM209	
	SiliconG	SG209	
	Thomson-CSF		
		SFC2209	
LM210	National	LM210	
	SiliconG	SG210	
	Thomson-CSF		
		SFC2210	
LM211	AD	AD211	
	Motorola	LM211	
	National	LM211	
	RCA	LM211	
	Signetics	LM211	
	SiliconG	SG211	
	TI	LM211	
	Thomson-CSF		
		SFC2211	
LM212	SiliconG	SG212	
LM218	National	LM218	
	TI	LM218	
	Thomson-CSF		
		TDE0118	
LM219	National	LM219	
	Signetics	LM219	
	Thomson-CSF		
		TDE0119	
LM224	Fairchild	μA224	
	Motorola	LM224	
	National	LM224	
	Raytheon	LM224	
	RCA	CA224	
	Signetics	LM224	
	SiliconG	SG224	
	TI	LM224	
	Thomson-CSF		
		TDE0124	
LM239	Fairchild	μA239	
	Motorola	LM239	
	National	LM239	
	PMI	CMP-04	
		PM239	
	Raytheon	LM239	
	RCA	**CA239**	**3599**
	Signetics	LM239	
	SiliconG	SG239	
	TI	LM239	
	Thomson-CSF		
		TDE0139	
LM239A	Motorola	LM239A	
	National	LM239A	
	PMI	CMP-04	
			(Continued)

Manufacturer Device	Replacement Source	Device	IC Master Page
LM239A	**RCA**	**CA239A**	**3599**
	SiliconG	SG239A	
LM248	National	LM248	
	TI	LM248	
	Thomson-CSF		
		TDE0148	
LM249	National	LM249	
LM302	Intersil	LM302	
	National	LM302	
	SiliconG	SG302	
LM305	Fairchild	μA305	
	Intersil	LM305	
	National	LM305	
	NEC	μPC141	
	SiliconG	SG305	
	Thomson-CSF		
		SFC2305	
LM306	National	LM306	
	TI	LM306	
LM307	**AD**	**AD741J**	**3351**
	Intersil	LM307	
	LinearTech	LM307	
	Motorola	LM307	
	National	LM307	
	Raytheon	LM307	
	RCA	CA307	
	SiliconG	SG307	
	TI	LM307	
	Thomson-CSF		
		SFC2307	
LM308	**AD**	**AD308**	**3351**
	Burr-Brown	3500	
		3501	
	Fairchild	μA308	
	Intersil	AD308	
		LM308	
	MicroPwr	MP5505	
		MPLM308	**3529**
	Motorola	LM308	
	National	LM308	
	Raytheon	LM308	
	SiliconG	SG308	
	Thomson-CSF		
		SFC2308	
LM309	Fairchild	μA309	
		μA7805	
	Lambda	LLM309	
		LMC7805	
		LμA7805	
	Motorola	LM309	
		MC7805	**3531**
	National	LM309	
		LM7805	
	NEC	μPC7805	
	SGS	L7805	
		L7810	
	SiliconG	SG309	
		SG340-05	
		SG340-5	
	TI	μA7805	
	Thomson-CSF		
		SFC2309	
	Toshiba	TA78005	
LM310	Intersil	LM310	
	National	LM310	
	PMI	BUF-03	
	SiliconG	SG310	
	Thomson-CSF		
		SFC2310	
LM311	AD	AD311	
	Fairchild	μA2903	
		μA311	
	Intersil	LM311	
	Motorola	LM2903	
		LM311	
	National	LM2903	
		LM311	
	NEC	μPC271	
		μPC311	
	Raytheon	LM311	
	RCA	**CA311**	**3598**
		LM311	
	Signetics	LM2903	
		LM311	
	SiliconG	SG311	
	TI	LM2903	
		LM311	
	Thomson-CSF		
		SFC2311	
		SFC3111	
LM312	National	LM312	
	SiliconG	SG3118	

Manufacturer Device	Replacement Source	Device	IC Master Page
LM318	AD	AD518	
	Fairchild	μA318	
	National	LM318	
	NEC	μPC159	
	TI	LM318	
	Thomson-CSF		
		TDB0118	
LM319	National	LM319	
	NEC	μPC319	
	Signetics	LM319	
LM324	**Exar**	**XR3403**	**3378**
		XR3403C	
	Fairchild	μA324	
		μA3403	
	Motorola	LM324	
		MC3403	
	National	LM324	
	NEC	μPC324	
	Raytheon	LM324	
		RC3403	
		RC4137	
	RCA	CA324	
		LM324	
	[illegible]	LA6324	
	Signetics	LM324	
		MC3403	
	SiliconG	SG324	
	TI	LM324	
		MC3403	
	Thomson-CSF		
		TDB0124	
LM339	AMD	LM339A	
	Fairchild	μA339	
	Hitachi	HA17901	
	Motorola	LM339	
	National	LM339	
	NEC	μPC339	
	PMI	CMP-04	
		PM339A	
	Raytheon	LM339	
	RCA	**CA339**	**3599**
		CA339A	**3599**
		LM339	
	SiliconG	SG339	
	TI	LM339	
	Thomson-CSF		
		TDB0139	
LM339A	AMD	LM339	
	Fairchild	μA339	
	Hitachi	HA17901	
	Motorola	LM339	
	National	LM339	
	NEC	μPC339	
	PMI	CMP-04	
		PM339A	
	Raytheon	LM339	
	RCA	**CA339**	**3599**
		CA339A	**3599**
		LM339	
	SiliconG	SG339	
	TI	LM339	
	Thomson-CSF		
		TDB0139	
LM348	**Exar**	**XR4212**	**3378**
	Fairchild	μA348	
	Harris	HA-4741	
	MicroPwr	MP5511	
	Motorola	MC4741	
	National	LM348	
	NEC	μPC4741	
	PMI	OP-11	
	Raytheon	HA4741	
		LM348	
		RC4156	
	TI	LM348	
	Thomson-CSF		
		TDB0111	
		TDB0148	
LM349	National	LM349	
	Thomson-CSF		
		TDB0149	
LM556	Exar	XR556	
		XR556M	
	Fairchild	μA556	
	Motorola	MC3456	
		MC3556	
	National	LM556	
	Raytheon	RC556	
		RM556	
	Signetics	NE556	
		SE556	**526**
	SiliconG	SG556	
			(Continued)

Manufacturer Device	Replacement Source	Device	IC Master Page
LM556	TI	NE556	
		SE556	
MC1488	**Exar**	**XR1488**	**3384**
	Fairchild	μA1488	
	Hitachi	HD75188	
	Motorola	**MC1488**	**3064**
	National	DS1488	
	Raytheon	RM1488	
	Signetics	MC1488	
	SiliconG	SG1488	
	TI	MC1488	
		SN75188	
MC1489	Exar	XR1489	
	Fairchild	μA1489	
	Hitachi	HD75189	
	Motorola	**MC1489**	**3064**
	National	DS1489	
	Signetics	MC1489	
	SiliconG	SG1489	
	TI	SN75189	
		SN85189	
MD8086	AMD	D8086	
	Fujitsu	MBL8086	
	Intel	8086	
		MD8086	
	NEC	μPD8086	
MMH0026	**Intersil**	**ICL7667**	**3013**
	National	DS0026	
		MH0026	
◆N8T26	Hitachi	HD268T26	
	Motorola	MC6880A	
		MC8T26	
	Signetics	N8T26	
◆N8T26A	Fairchild	μA8T26A	
	Motorola	MC8T26A	
	National	DS8T26A	
	Signetics	**N8T26A**	**876**
	TI	N8T26A	
◆N8T28	Motorola	MC8T28	
	Signetics	**N8T28**	**876**
◆NE592	Fairchild	μA733	
	Hitachi	HA17733	
	Intersil	μA733	
	Motorola	MC1733	
		NE592	
	National	LM733	
	Signetics	μA733	
	SiliconG	SG733	
	TI	μA733	
◆S8T26	Signetics	S8T26	
◆S8T28	**Signetics**	**S8T28**	**876**
◆SE592	Intersil	SE592	
	Motorola	SE592	
	Signetics	**SE592**	**3675**
SN5489-1	AMD	SN54S289	
		SN74S289	
	Fairchild	54S289	
	National	DM5489	
		DM54S289	
		MM54S289	
	Signetics	54S289	
		54S301	**532**
		S8225	
		S82S25	
	TI	SN5489	
		SN54S289	
◆SN54LS138	Fairchild	54LS138	
	Motorola	SN54LS138	
	National	DM54LS138	
	Signetics	**54LS138**	**529**
	TI	**SN54LS138**	**968**
◆SN54LS139	Fairchild	54LS139	
	Motorola	SN54LS139	
	National	DM54LS139	
	Signetics	**54LS139**	**529**
	TI	**SN54LS139**	**968**
◆SN54LS148	Motorola	SN54LS148	
	TI	**SN54LS148**	**971**
◆SN54LS151	Fairchild	54LS151	
	Motorola	SN54LS151	
	National	DM54LS151	
	Signetics	54LS151	
	TI	**SN54LS151**	**972**
◆SN54LS153	Fairchild	54LS153	
	Motorola	SN54LS153	
	National	DM54LS153	
	Signetics	**54LS153**	**529**
	TI	**SN54LS153**	**972**
◆SN54LS157	Fairchild	54LS157	
	Motorola	SN54LS157	
	National	DM54LS157	
			(Continued)

◆ Discontinued

Bold face device numbers indicate manufacturers data is provided in the IC Master on the pages noted.

© IC MASTER 1984

Advanced Micro Devices (Cont'd)

Manufacturer Device	Replacement Source	Device	IC Master Page
◆SN54LS157	**Signetics**	**54LS157**	**529**
	TI	**SN54LS157**	**975**
◆SN54LS158	Fairchild	54LS158	
	Motorola	SN54LS158	
	National	DM54LS158	
	Signetics	54LS158	
	TI	**SN54LS158**	**975**
◆SN54LS160A	Motorola	SN54LS160A	
	Signetics	54LS160A	
	TI	**SN54LS160A**	**977**
◆SN54LS161A	Fairchild	54LS161A	
	Motorola	SN54LS161A	
	National	DM54LS161A	
	Signetics	**54LS161A**	**529**
	TI	**SN54LS161A**	**977**
◆SN54LS162A	Motorola	SN54LS162A	
	National	DM54LS162A	
	Signetics	54LS162A	
	TI	**SN54LS162A**	**978**
◆SN54LS163A	Motorola	SN54LS163A	
	National	DM54LS163A	
	Signetics	**54LS163A**	**529**
	TI	**SN54LS163A**	**978**
◆SN54LS164	Fairchild	54LS164	
	Motorola	SN54LS164	
	National	DM54LS164	
	Signetics	**54LS164**	**529**
	TI	**SN54LS164**	**979**
◆SN54LS168A	Fairchild	54LS168	
	Motorola	SN54LS168	
	National	DM54LS168	
	TI	SN54LS168	
◆SN54LS169A	Fairchild	54LS169	
	Motorola	SN54LS169	
	National	DM54LS169	
	TI	SN54LS169	
◆SN54LS174	Fairchild	54LS174	
	Motorola	SN54LS174	
	National	DM54LS174	
	Signetics	**54LS174**	**529**
	TI	**SN54LS174**	**983**
◆SN54LS175	Fairchild	54LS175	
	Motorola	SN54LS175	
	National	DM54LS175	
	Signetics	**54LS175**	**529**
	TI	**SN54LS175**	**983**
◆SN54LS181	Fairchild	54LS181	
	Motorola	SN54LS181	
	Signetics	54LS181	
	TI	**SN54LS181**	**985**
◆SN54LS190	Motorola	SN54LS190	
	National	DM54LS190	
	Signetics	**54LS190**	**529**
	TI	**SN54LS190**	**989**
◆SN54LS191	Motorola	SN54LS191	
	National	DM54LS191	
	Signetics	**54LS191**	**529**
	TI	**SN54LS191**	**989**
◆SN54LS192	Fairchild	54LS192	
	Motorola	SN54LS192	
	National	DM54LS192	
	Raytheon	54LS192	
	Signetics	**54LS192**	**530**
	TI	**SN54LS192**	**990**
◆SN54LS193	Fairchild	54LS193	
	Motorola	SN54LS193	
	National	DM54LS193	
	Signetics	**54LS193**	**530**
	TI	**SN54LS193**	**990**
◆SN54LS194A	Fairchild	54LS194A	
	Motorola	SN54LS194A	
	TI	**SN54LS194A**	**990**
◆SN54LS195A	Fairchild	54LS195A	
	Motorola	SN54LS195A	
	Signetics	**54LS195A**	**530**
	TI	**SN54LS195A**	**991**
◆SN54LS240	Fairchild	54LS240	
	MMI	**SN54LS240**	**804**
	Motorola	SN54LS240	
	TI	SN54LS240	
◆SN54LS241	Fairchild	54LS241	
	MMI	**SN54LS241**	**804**
	Motorola	SN54LS241	
	TI	SN54LS241	
◆SN54LS242	Motorola	SN54LS242	
	TI	SN54LS242	
◆SN54LS243	Motorola	SN54LS243	
	TI	SN54LS243	
◆SN54LS244	Fairchild	54LS244	
	MMI	**SN54LS244**	**804**
	Motorola	SN54LS244	
	TI	SN54LS244	
◆SN54LS251	Fairchild	54LS251	
	Motorola	SN54LS251	
	Signetics	54LS251	
	TI	**SN54LS251**	**1003**
◆SN54LS253	Fairchild	54LS253	
	Motorola	SN54LS253	
	National	DM54LS253	
		DM7214	
	Signetics	54LS253	
	TI	**SN54LS253**	**1003**
◆SN54LS257	National	DM54LS257	
	Signetics	54LS257	
	TI	SN54LS257	
◆SN54LS258	National	DM54LS258	
	Signetics	54LS258	
	TI	SN54LS258	
◆SN54LS273	AMD	AM25LS273M	
	Fairchild	54LS273	
	MMI	**SN54LS273**	**804**
	Motorola	SN54LS273	
	Signetics	**54LS273**	**530**
	TI	**SN54LS273**	**1007**
◆SN54LS281	TI	SN54LS281	
SN54LS298	Fairchild	54LS298	
	Motorola	SN54LS298	
	TI	**SN54LS298**	**1015**
SN54LS299	Fairchild	54LS299	
	MMI	54LS299	
	Motorola	SN54LS299	
	TI	**SN54LS299**	**1016**
SN54LS322	Motorola	SN54LS322	
	TI	SN54LS322	
SN54LS323	Fairchild	54LS323	
	Motorola	SN54LS323	
	TI	SN54LS323A	
◆SN54LS373	**MMI**	**SN54LS373**	**804**
	Motorola	SN54LS373	
	Signetics	**54LS373**	**530**
	TI	**SN54LS373**	**1025**
◆SN54LS374	**MMI**	**SN54LS374**	**804**
	Motorola	SN54LS374	
	National	DM54LS374	
	TI	**SN54LS374**	**1026**
◆SN54LS377	AMD	AM25LS377M	
	Fairchild	54LS377	
	MMI	**SN54LS377**	**804**
	Motorola	SN54LS377	
	Signetics	**54LS377**	**530**
	TI	**SN54LS377**	**1027**
SN54LS378	Fairchild	54LS378	
	Motorola	SN54LS378	
	TI	**SN54LS378**	**1027**
SN54LS379	Fairchild	54LS379	
	Motorola	SN54LS379	
	TI	**SN54LS379**	**1028**
SN54LS381	**TI**	**SN54LS381**	**1028**
SN54LS384	**TI**	**SN54LS384**	**1029**
SN54LS385	Motorola	SN54LS385	
	TI	**SN54LS385**	**1030**
SN54LS399	Fairchild	54LS399	
	Motorola	SN54LS399	
	TI	**SN54LS399**	**1032**
SN54LS424	TI	SN54LS424	
SN54LS568	Motorola	SN54LS568	
SN54LS569	Motorola	SN54LS569	
SN54S138	Fairchild	54S138	
	TI	**SN54S138**	**968**
SN54S139	Fairchild	54S139	
	Signetics	54S139	
	TI	**SN54S139**	**968**
SN54S151	Fairchild	54S151	
	Signetics	**54S151**	**531**
	TI	**SN54S151**	**972**
SN54S153	Fairchild	54S153	
	Signetics	**54S153**	**531**
	TI	**SN54S153**	**972**
SN54S157	Fairchild	54S157	
	Signetics	**54S157**	**531**
	TI	**SN54S157**	**975**
SN54S158	Fairchild	54S158	
	Signetics	**54S158**	**531**
	TI	**SN54S158**	**975**
SN54S174	Fairchild	54S174	
	TI	**SN54S174**	**983**
SN54S175	Fairchild	54S175	
		93S411	
	TI	**SN54S175**	**983**
SN54S181	Fairchild	93S41M	
	Signetics	**54S181**	**531**
	TI	**SN54S181**	**985**
SN54S189	Fairchild	54S189	
	National	DM54S189	
	Signetics	**54S189**	**532**
	TI	SN54S189	
SN54S194	Fairchild	54S194	
	TI	**SN54S194**	**990**
SN54S195	Fairchild	54S195	
		93S00M	
SN54S240	MMI	SNS240	
	TI	SN54S240	
SN54S241	**MMI**	**SN54S241**	**804**
	TI	SN54S241	
SN54S244	**MMI**	**SN54S244**	**804**
	TI	SN54S244	
SN54S251	Signetics	54S251	
	TI	**SN54S251**	**1003**
SN54S253	Fairchild	54S253	
	Signetics	54S253	
SN54S257	Signetics	54S257	
	TI	**SN54S257**	**1004**
SN54S258	Fairchild	54S258	
	Signetics	54S258	
	TI	**SN54S258**	**1005**
SN54S289	AMD	SN5489-1	
		SN74S289	
	Fairchild	54S289	
	National	DM5489	
		DM54S289	
		MM54S289	
	Signetics	54S289	
		54S301	**532**
		S8225	
		S82S25	
	TI	SN5489	
		SN54S289	
SN74164	Fairchild	74164	
	Hitachi	HD74164	
	National	DM74164	
		DM8570	
		DM8579	
	Signetics	**74164**	**861**
	TI	**SN74164**	**979**
SN7489-1	AMD	31L01	
		AM27LS02	
		AM27S02	
		AM3101	
		AM3101A	
	Fairchild	74S289	
	Intel	3101	
	Motorola	MC4064	
	National	DM7589	
	NEC	μPB2089	
		μPB2289	
	Signetics	3101	
		3101A	
		7489	
		N8225	
		S3101	
	TI	**SN7489**	**951**
◆SN74LS161	Fairchild	74LS161A	
	Hitachi	HD74LS161A	
	Motorola	SN74LS161A	
	National	DM74LS161	
	NEC	μPB74LS161	
	SGS	T74LS161	
	Signetics	74LS161A	
	TI	**SN74LS161A**	**977**
◆SN74LS240	Fairchild	74LS240	
	Hitachi	HD74LS240	
	MMI	**SN74LS240**	**804**
	Motorola	SN74LS240	
	Signetics	74LS240	
	TI	SN74LS240	
◆SN74LS241	Fairchild	74LS241	
	Hitachi	HD74LS241	
	MMI	**SN74LS241**	**804**
	Motorola	SN74LS241	
	Signetics	74LS241	
	TI	SN74LS241	
◆SN74LS242	Fairchild	74LS242A	
	Motorola	SN74LS242	
	Signetics	74LS242	
	TI	SN74LS242	
◆SN74LS243	Fairchild	74LS243A	
	Motorola	SN74LS243	
	Signetics	74LS243	
	TI	SN74LS243	
◆SN74LS244	Fairchild	74LS244	
	Hitachi	HD74LS244	

(Continued)

Manufacturer Device	Replacement Source	Device	IC Master Page
◆SN74LS244	**MMI**	**SN74LS244**	**804**
	Motorola	SN74LS244	
	Signetics	74LS244	
	TI	SN74LS244	
◆SN74LS273	**AMD**	**AM25LS273**	**1427**
	Fairchild	74LS273	
	MMI	**SN74LS273**	**804**
	Motorola	SN74LS273	
	SGS	T74LS273	
	Signetics	74LS273	
	TI	**SN74LS273**	**1007**
SN74LS299	Fairchild	74LS299	
	Hitachi	HD74LS299	
	Motorola	SN74LS299	
	SGS	T74LS299	
	TI	**SN74LS299**	**1016**
SN74LS322	Fairchild	74LS322	
	Motorola	SN74LS322	
	TI	**SN74LS322A**	**1018**
SN74LS323	Fairchild	74LS323	
	Motorola	SN74LS323	
	TI	**SN54LS323**	**1018**
		SN74LS323	**1018**
◆SN74LS373	Fairchild	74LS373	
	MMI	**SN74LS373**	**804**
	Motorola	SN74LS373	
	SGS	T74LS373	
	Signetics	74LS373	
	TI	**SN74LS373**	**1025**
◆SN74LS374	Fairchild	74LS374	
	MMI	**SN74LS374**	**804**
	Motorola	SN74LS374	
	National	DM74LS374	
	SGS	T74LS374	
	Signetics	74LS374	
	TI	**SN74LS374**	**1026**
◆SN74LS377	**AMD**	**AM25LS377**	**1427**
	Fairchild	74LS377	
	MMI	**SN74LS377**	**804**
	Motorola	SN74LS377	
	SGS	T74LS377	
	Signetics	74LS377	
	TI	**SN74LS377**	**1027**
SN74LS378	Fairchild	74LS378	
	Motorola	SN74LS378	
	SGS	T74LS378	
	Signetics	74LS378	
	TI	**SN74LS378**	**1027**
SN74LS379	Fairchild	74LS379	
	Motorola	SN74LS379	
	SGS	T74LS379	
	TI	**SN74LS379**	**1028**
SN74LS381	**TI**	**SN74LS381**	**1028**
SN74LS384	**TI**	**SN74LS384**	**1029**
SN74LS385	Motorola	SN74LS385	
	TI	**SN74LS385**	**1030**
SN74LS399	Motorola	SN74LS399	
	TI	**SN74LS399**	**1032**
SN74LS424	TI	SN74LS424	
SN74LS533	Fairchild	74LS533	
SN74LS534	AMD	AM74LS534	
	Fairchild	74LS534	
	MMI	**SN74LS534**	**804**
SN74LS568	Motorola	SN74LS568	
	Signetics	74LS568	
SN74LS569	Motorola	SN74LS569	
	Signetics	74LS569	
SN74S138	Fairchild	74S138	
	National	DM74S138	
	Signetics	74S138	
	TI	**SN74S138**	**968**
SN74S139	Fairchild	74S139	
	National	DM74S139	
	Signetics	74S139	
	TI	**SN74S139**	**968**
SN74S151	Fairchild	74S151	
	Hitachi	HD74S151	
	National	DM74S151	
	Signetics	74S151	
	TI	**SN74S151**	**972**
SN74S153	Fairchild	74S153	
	Hitachi	HD74S153	
	National	DM74S153	
	Signetics	74S153	
	TI	**SN74S153**	**972**
SN74S157	Fairchild	74S157	
	Hitachi	HD74S157	
	National	DM74S157	
	Signetics	74S157	
	TI	**SN74S157**	**975**
SN74S158	Fairchild	74S158	
	Hitachi	HD74S158	

(Continued)

◆ Discontinued

The manufacturers report their devices can be used as direct replacements.
Performance details often differ, so compare the specifications considering your requirements.

Advanced Micro Devices (Cont'd)

Manufacturer Device	Replacement Source	Device	IC Master Page
SN74S158	National	DM74S158	
	Signetics	74S158	
	TI	**SN74S158**	**975**
SN74S160	Fairchild	93S10	
	National	DM54LS160	
	Signetics	54LS160	
SN74S174	Fairchild	74S174	
	Hitachi	HD74S174	
	National	DM74S174	
	Signetics	74S174	
	TI	**SN74S174**	**983**
SN74S175	Fairchild	74S175	
	Hitachi	HD74S175	
	National	DM74S175	
	Signetics	74S175	
	TI	SN74S175	
SN74S181	Fairchild	93S41C	
	Hitachi	HD74S181	
	Signetics	74S181	
	TI	**SN74S181**	**985**
SN74S189	AMD	AM27LS03	
		AM27S03	
	Fairchild	74S189	
		93405	
	Hitachi	HD74S189	
	National	DM74S189	
		DM7599	
		DM8599	
	Signetics	74S189	
	TI	SN74S189	
SN74S194	Fairchild	74S194	
	Signetics	74S194	
	TI	**SN74S194**	**990**
SN74S195	Fairchild	74S195	
		93S00C	
	National	DM74S195	
	Signetics	74S195	
	TI	**SN74S195**	**991**
SN74S240	**MMI**	**SN74S240**	**804**
	Signetics	74S240	
	TI	SN74S240	
SN74S241	**MMI**	**SN74S241**	**804**
	Signetics	74S241	
	TI	SN74S241	
SN74S244	Signetics	74S244	
SN74S251	Hitachi	HD74S251	
	National	DM74S251	
	Signetics	74S251	
	TI	**SN74S251**	**1003**
SN74S253	Fairchild	74S253	
	National	DM74S253	
	Signetics	74S253	
SN74S257	Fairchild	74S257	
	Hitachi	HD74S257	
	National	DM7123	
		DM74S257	
		DM8123	
	Signetics	74S257	
	TI	**SN74S257**	**1004**
SN74S258	Fairchild	74S258	
	Hitachi	HD74S258	
	Signetics	74S258	
	TI	**SN74S258**	**1005**
SN74S289	AMD	SN5489-1	
		SN54S289	
	Fairchild	54S289	
	National	DM5489	
		DM54S289	
		MM54S289	
	Signetics	54S289	
		54S301	**532**
		S8225	
		S82S25	
	TI	SN5489	
		SN54S289	
SN74S534	Signetics	74S534	
SSS1408	AMD	AM1408	
	AD	AD1408	
		ADDAC-08	
	Datel	DAC-08B	
		DAC-I8BC	
		DAC-IC8B	
		DAC-IC8BC	**2863**
	Fairchild	DAC-08	
		MA0802M	
		μA0801	
		μA0802	
	Motorola	**DAC-08**	**3069**
		MC1408	

(Continued)

Manufacturer Device	Replacement Source	Device	IC Master Page
SSS1408	National	DAC0800	
		DAC0801	
		DAC0802	
		DAC0806	
		DAC0807	
		DAC0808	
	NEC	μPC624	
	PMI	DAC-08	
		DAC-1408	
	Raytheon	**DAC-08**	**3591**
	Signetics	MC1408	
TMS2812	Plessey	MP2812	
Z8001	SGS	Z8001	
	Zilog	**Z8001**	**1741**
Z8002	SGS	Z8002	
	Zilog	**Z8002**	**1741**
Z8010	SGS	Z8010	
	Zilog	Z8010	
Z8016	Zilog	Z8016	
Z8030	Zilog	Z8030	
Z8031	Zilog	Z8031	
Z8036	SGS	Z8036	
	Zilog	Z8036	
Z8038	SGS	Z8038	
	Zilog	Z8038	
Z8060	SGS	Z8060	
	Zilog	Z8060	
Z8530	Zilog	Z8530	
Z8531	**Zilog**	**Z8531**	**1751**
Z8536	Zilog	Z8536	
Z8538	Zilog	Z8538	
Z8590	**Zilog**	**Z8590**	**1755**
Z8591	Zilog	Z8591	
Z8592	Zilog	Z8592	
Z8593	Zilog	Z8593	
Z8594	Zilog	Z8594	

American Microsystems, Inc.

Manufacturer Device	Replacement Source	Device	IC Master Page
1010	SBE	1010	
1020	SBE	1020	
1120	SBE	1120	
4015	AMD	AM93415	
	Fairchild	93415	
	Fujitsu	MBM93415	
	Hitachi	HM2510	
		HM2511	
	Intel	2115A	
	Motorola	MCM2115	
	Signetics	N82S10	
		S82S10	
	TI	SN54S314	
		SN74S314	
4017	AMD	AM2147	
	Fujitsu	MBM2147	
	Hitachi	HM4847	
	Intel	2147	
	Intersil	IM2147	
	ITT	4547	
	Motorola	MCM2147	
	National	MM2147	
	NEC	μPD2147	
	Synertek	SY2147	
	TI	TMS2147	
	Toshiba	TMM315	
	Universal	UM2147	
4025	AMD	AM93425	
	Fairchild	93425A	
560	SBE	560	
590	SBE	590	
7501	**NEC**	**μPD7501**	**1578**
7502	**NEC**	**μPD7502**	**1578**
7503	**NEC**	**μPD7503**	**1578**
7506	**NEC**	**μPD7506**	**1578**
7507	**NEC**	**μPD7507**	**1578**
7508	**NEC**	**μPD7508**	**1578**
7508H	**NEC**	**μPD7508H**	**1578**
7800	NEC	μPD7800	
7801	NEC	μPD7801	
S1602	Fairchild	3730	
		F6850	**1463**
	Fujitsu	MB8868A	
	GI	AY3-1015	
	Hitachi	HD6850	
		HD68A50	
	Motorola	**MC6850**	**1505**
	National	MM5303	
	RCA	**CDP6402**	**1595**
	SMC	COM2017	
		COM2502H	
		COM8017	

(Continued)

Manufacturer Device	Replacement Source	Device	IC Master Page
S1602	Thomson-CSF		
		EF6850	
	Western	TR1402	
		TR1602	
		TR1863	
S2182	AMI	S2183	
		S2185	
	Fairchild	3347	
	SMC	SR5015	
S2183	AMI	S2182	
		S2185	
	Fairchild	3347	
	SMC	SR5015	
S2185	AMI	S2182	
		S2183	
	Fairchild	3347	
	SMC	SR5015	
S23128	AMD	AM92128	
	GI	R09128	
	Hitachi	HN613128	
	Motorola	MCM63128	
	National	S2128	
	NCR	NCR23128	
	NEC	μPD2/83128	
		μPD23/83128	
	OKI	**MSM38128**	**4118**
	Signetics	**23128-30**	**4202**
	Synertek	SY23128	
	VTI	**VT23128**	**4252**
S2333	AMD	AM9233	
	Fairchild	F3533	
	GI	R09433	
	Intel	2332	
	NCR	2333	
		NCR2333	
	RCA	**CDM5332**	**1593**
	Signetics	2332	
	SSS	SCM23C33	
	Synertek	**SY2333**	**4211**
	Universal	UM2333-45	
	VTI	**VT2333**	**4249**
S25089	Mitel	MT5089	
	Mostek	MK5089	
	National	TP5089	
	Plessey	MV5089	
	TI	TCM5089	
S2559	TI	TCM5087	
S2688	National	MM5837	
S2859	GI	AY5-9559	
	Mitel	MT5087	
	Mostek	MK5087	
	National	TP5087	
	Plessey	MV5087	
	TI	TCM5087	
S3506	Mitel	MT3506	
S3507	Mitel	MT3507	
S4264	AMD	AM9264	
	AMI	**S68A364**	**3933**
	GTEMicro	2364-3	
	Hitachi	HN48364	
	Mostek	MK36000-5	
	Motorola	MCM68365	
		MCM68366	
	National	MM52164	
	NCR	2364	
	NEC	UPD2/8364-30	
		μPD23/8364-30	
	OKI	MSM2965	
	Signetics	2664A-30	
	Synertek	**SY2364-3**	**4211**
	Toshiba	TMM2364	
	Weitek	SC8164	
S4521	Hughes	HLCD0438	
	National	MM58438	
	RCA	CD0438	
S4534	Sprague	UCN-4810	
		UCN-4810A	
	TI	UCN4810	
S50240	Mostek	MK50240	
S50241	Mostek	MK50241	
S50242	Mostek	MK50242	
S5101	Intel	5101	
	SSS	SCM5101	
S6508	Fairchild	4736R	
	Harris	**HM6508**	**3965**
	Intel	2125A	
	Motorola	MCM2125	
	National	MM74C929	
		NMC6508	
	NEC	μPD443	
	SSS	SCM21C02	
	Toshiba	TC5508	

Manufacturer Device	Replacement Source	Device	IC Master Page
S6551	Rockwell	R6551	
	Synertek	**SY6551**	**1696**
S6801	Hitachi	HD6801	
	Motorola	**MC6801**	**1501,1505**
S6802	**Fairchild**	**F6802**	**1461**
	Hitachi	HD6802	
	Motorola	**MC6802**	**1505,2045**
	Thomson-CSF		
		EF6802	
S68045	**Synertek**	**SY68045**	**1696**
S6805	Hitachi	HD6805	
	Motorola	MC6805	
	Thomson-CSF		
		EF6805	
S6808	**Fairchild**	**F6808**	**1461**
	Hitachi	HD6808	
	Motorola	**MC6808**	**1505**
	Thomson-CSF		
		EF6808	
S6809	Hitachi	HD6809	
		HD68A09	
		HD68B09	
	Motorola	**MC6809**	**1505,2045**
	Thomson-CSF		
		EF6809	
S6810	**Fairchild**	**F6810**	**1461**
	Hitachi	HD6810	
		HD68A10	
	Motorola	MC6810	
		MCM6810	**1505,4046**
	Thomson-CSF		
		EF6810	
S6821	**Fairchild**	**F6821**	**1462**
	Hitachi	HD6821	
		HD68A21	
		HD68B21	
	Motorola	**MC6821**	**1505**
S68322	AMD	AM9232	
	AMI	S68A332	
	Fairchild	F3532	
	GI	R094132	
		T094132	
	GTEMicro	2332	
	Hitachi	HN46332	
	Intersil	IM7332	
	Motorola	MC68332	
		MCM68332	
		MCM68A332	**4048**
	National	MM52132	
	NCR	2332	
		NCR2332	
	NEC	**μPD2332**	**4100**
	OKI	**MSM2932**	**4118**
	RCA	**CDM5333**	**1593**
	Rockwell	R2332	
	SiliconG	SG3532	
	SSS	SCM23C32	
	SMC	ROM4732	
	Synertek	**SY2332**	**4211**
	TI	**TMS4732**	**4225**
	Toshiba	TM2332	
		TMM333	
	Universal	UM2332	
	VTI	**VT2332**	**4249**
S68364	GI	R09464	
	GTEMicro	G5364	
	Intersil	IM7364	
	MicroPwr	MP2364	
	Mitsubishi	M5L2364	
	Mostek	MK36000	
	Motorola	**MCM68364**	**4048,4054**
	National	MM5235	
	NCR	NCR2364	
	RCA	**CDM5364**	**1593**
	SMOS	SMM2364	
	SGS	M36000	
	Signetics	2664A	
	SSS	SCM23C64	
		SCM23C65	
	SMC	ROM36000	
	Synertek	**SY2364**	**4211**
	TI	**TMS4764**	**4225**
	Toshiba	TM2364	
	VTI	**VT2364**	**4250**
S6840	**Fairchild**	**F6840**	**1462**
	Hitachi	HD46840	
		HD6840	
		HD68A40	
		HD68B40	

(Continued)

◆ Discontinued

Bold face device numbers indicate manufacturers data is provided in the IC Master on the pages noted.

American Microsystems, Inc. (Cont'd)

Manufacturer Device	Replacement Source	Device	IC Master Page
S6840	**Motorola**	**MC6840**	**1505**
	Thomson-CSF		
		EF6840	
S6846	**Fairchild**	**F6846**	**1463**
	Hitachi	HD46846	
		HD6846P	
	Motorola	**MC6846**	**1505**
S68488	**Fairchild**	**F68488**	**1463**
	Motorola	**MC68488**	**1505**
S6852	**Fairchild**	**F6852**	**1464**
	Hitachi	HD6852	
		HD68A52	
	Motorola	**MC2652**	**1511**
		MC6852	**1505**
		MC68652	
			1506,1511
	SSS	SND5025	
	SMC	COM5025	
	Thomson-CSF		
		EF6852	
S6854	**Fairchild**	**F6854**	**1464**
	Motorola	**MC6854**	**1505**
S68A00	Motorola	MC68A00	
S68A10	Motorola	MC68A10	
S68A21	Motorola	MC68A21	
S68A332	AMD	AM9232	
	AMI	S68322	
	Fairchild	F3532	
	GI	R094132	
		T094132	
	GTEMicro	2332	
	Hitachi	HN46332	
	Intersil	IM7332	
	Motorola	MC68332	
		MCM68332	
		MCM68A332	**4048**
	National	MM52132	
	NCR	2332	
		NCR2332	
	NEC	**μPD2332**	**4100**
	OKI	**MSM2932**	**4118**
	RCA	**CDM5333**	**1593**
	Rockwell	R2332	
	SiliconG	SG3532	
	SSS	SCM23C32	
	SMC	ROM4732	
	Synertek	**SY2332**	**4211**
	TI	**TMS4732**	**4226**
	Toshiba	TM2332	
		TMM333	
	Universal	UM2332	
	VTI	**VT2332**	**4249**
S68A364	AMD	AM9264	
	AMI	S4264	
	GTEMicro	2364-3	
	Hitachi	HN48364	
	Mostek	MK36000-5	
	Motorola	MCM68365	
		MCM68366	
	National	MM52164	
	NCR	2364	
	NEC	UPD2/8364-30	
		μPD23/8364-30	
	OKI	MSM2965	
	Signetics	2664A-30	
	Synertek	**SY2364-3**	**4211**
	Toshiba	TMM2364	
	Weitek	SC8164	
S68A50	Motorola	MC68A50	
S68A54	Motorola	MC68A54	
S68B00	Motorola	MC68B00	
S68B10	Motorola	MC68B10	
S68B21	Motorola	MC68B21	
S68B364	AMD	AM92640	
	Fairchild	**F3564-25**	**1465**
	GTEMicro	G5364	
	Mostek	MK36000-4	
	Motorola	MCM67365-25	
	NEC	μPD2/8364-20	
		μPD23/8364-20	
	Signetics	2064-20	
	Synertek	SY2364-2	
S68B50	Motorola	MC68B50	
S68B54	Motorola	MC68B54	
S9900	**TI**	**TMS9900**	**1702**
S99000	**AMD**	**AMPAL22V10**	**4600**
	TI	TMS99000	
S9901	**TI**	**TMS9901**	**1712**
S9902	TI	TMS9902	
S9903	**TI**	**TMS9903**	**1712**
S9904	TI	TMS9904	
S9940	TI	TMS9940	
S9980	TI	TMS9980	
S9981	TI	TMS9981	
S9995	**TI**	**TMS9995**	**1702**
UA-1	CalDevices	HC3100	
	LSILogic	**LC3100**	**4762**
UA-2	CalDevices	HC4100	
	LSILogic	**LC4100**	**4762**
UA-3	CalDevices	HC5400	
	LSILogic	**LC5400**	**4762**
UA-4	CalDevices	HC7700	
	LSILogic	**LC7700**	**4762**
UA-5	CalDevices	HC10000	
	LSILogic	**LC10000**	**4762**
UA-6	CalDevices	HC12600	
	LSILogic	**LC12600**	**4762**

Amperex Electronic Corp.

Manufacturer Device	Replacement Source	Device	IC Master Page
BGY54A	Motorola	MHW3171	
	TRW-LSI	AMPEREX	
BGY55A	Motorola	MHW3172	
	TRW-LSI	CA3200	
BGY56	Motorola	MHW1221	
	TRW-LSI	CA2322A	
BGY57	Motorola	MHW1222	
	TRW-LSI	CA2301	
BGY58A	Motorola	MHW1341	
		MHW1342	
	TRW-LSI	CA2622	
		CA3600	
BGY74	Motorola	MHW4171	
		MHW5171	
	TRW-LSI	CA4100	
		CA4101	
BGY75	Motorola	MHW4172	
		MHW5172	
	TRW-LSI	CA4200	
		CA4201	
BGY78	Motorola	MHW4342	
		MHW5342	
	TRW-LSI	CA4600	
		CA5600	

Analog Devices

Manufacturer Device	Replacement Source	Device	IC Master Page
AD-OP07	AD	OP-07	
	Harris	HA-OP07	
	LinearTech	OP-07	
	PMI	**OP-07**	**3566**
	Raytheon	**OP-07**	**3592**
	TI	OP-07	
AD0042	AD	AD503	
	Intersil	AD503	
		LH0042	
	National	LH0042	
AD101	AMD	LM101	
	Fairchild	μA101	
	Intersil	AD101	
	LinearTech	LM101	
	Motorola	LM101	
	Raytheon	LM101	
	SiliconG	SG101	
	TI	LM101	
	Thomson-CSF		
		SFC2101	
AD108	AMD	LM108	
	Fairchild	μA108	
		μA725	
	Intel	ISBC108	
	Intersil	ICL108	
		LM108	
	LinearTech	LM108	
		LM108A	
		OP-05	
	MicroPwr	MP5501	
		MP5505	
		MPLM108A	
		OP-08	
	Motorola	LM108	
	National	LM108	
		LM108A	
	NEC	μPC154	
	PMI	OP-01	
		OP-05	**3566**
		OP-06	
		OP-07	**3566**
		PM108	
		PM725	
	Raytheon	**OP-05**	**3592**
AD108	**Raytheon**	**OP-07**	**3592**
		RC725	
		RM725	
	Signetics	LM108	
AD111	AMD	LM111	
	Fairchild	μA111	
	Intersil	LM111	
	Motorola	LM111	
	National	LM111	
	Raytheon	LM111	
	Signetics	LM111	
	SiliconG	SG111	
	TI	LM111	
	Thomson-CSF		
		SFC2111	
AD1403	**Motorola**	**MC1403**	**3535**
	SiliconG	SG1403	
AD1408	AMD	AM1408	
		SSS1408	
	AD	ADDAC-08	
	Datel	DAC-08B	
		DAC-I8BC	
		DAC-IC8B	
		DAC-IC8BC	**2863**
	Fairchild	DAC-08	
		MA0802M	
		μA0801	
		μA0802	
	Motorola	**DAC-08**	**3069**
		MC1408	
	National	DAC0800	
		DAC0801	
		DAC0802	
		DAC0806	
		DAC0807	
		DAC0808	
	NEC	μPC624	
	PMI	DAC-08	
		DAC-1408	
	Raytheon	**DAC-08**	**3591**
	Signetics	MC1408	
AD201	AMD	LM201	
	Fairchild	μA201	
		μA748	
	Intersil	LM748	
		μA748	
	Motorola	LM201	
		MC1748	
	National	LM201	
		LM748	
	Plessey	SL748	
	RCA	CA201	
		CA748	
		LM748	
	SiliconG	SG201	
		SG748	
	TI	LM201	
		SN72748P	
		μA748	
	Thomson-CSF		
		SFC2201	
		SFC2748	
AD2020	**RCA**	**CA3162**	**3600**
AD208	AMD	LM208	
	Fairchild	μA208	
	LinearTech	OP-05	
	MicroPwr	MP5505	
		MP5508	**3529**
		MPLM208	**3529**
	Motorola	LM208	
	National	LM208	
	PMI	**OP-05**	**3566**
		PM208	
	Raytheon	**OP-05**	**3592**
	SiliconG	SG208	
	TI	μA714	
	Thomson-CSF		
		SFC2208	
AD211	AMD	LM211	
	Motorola	LM211	
	National	LM211	
	RCA	LM211	
	Signetics	LM211	
	SiliconG	SG211	
	TI	LM211	
	Thomson-CSF		
		SFC2211	
AD2700	HybridSys	R675-4	
	HyComp	HC2700	
		HC2710	
AD2701	HybridSys	R675-5	
	HyComp	HC2701	
		HC2710	
AD2702	HybridSys	R675-3	
	HyComp	HC2702	
		HC2712	
AD2710	HyComp	HC201	
		HC2711	
AD301	Fairchild	μA301A	
	Intersil	AD301	
	LinearTech	LM301	
		LM301A	
	Motorola	LM301	
	National	LM301	
		LM301A	
	NEC	μPC157	
		μPC301	
	Raytheon	LM301	
	RCA	CA301	
		LM301	
	SiliconG	SG301	
	TI	LM301	
		LM301A	
	Thomson-CSF		
		SFC2301	
	Toshiba	TA7506	
AD308	AMD	LM308	
	Burr-Brown	3500	
		3501	
	Fairchild	μA308	
	Intersil	AD308	
		LM308	
	MicroPwr	MP5505	
		MPLM308	**3529**
	Motorola	LM308	
	National	LM308	
	Raytheon	LM308	
	SiliconG	SG308	
	Thomson-CSF		
		SFC2308	
AD311	AMD	LM311	
	Fairchild	μA2903	
		μA311	
	Intersil	LM311	
	Motorola	LM2903	
		LM311	
	National	LM2903	
		LM311	
	NEC	μPC271	
		μPC311	
	Raytheon	LM311	
	RCA	**CA311**	**3598**
		LM311	
	Signetics	LM2903	
		LM311	
	SiliconG	SG311	
	TI	LM2903	
		LM311	
	Thomson-CSF		
		SFC2311	
		SFC3111	
AD346	**MicroNet**	**MN346**	**3045**
AD3542	Burr-Brown	3542	
AD370	AD	AD371	
	HybridSys	DAC346	
		DAC347	
		DAC356	
	MicroNet	**MN370**	**3044**
		MN371	**3044**
AD371	AD	AD370	
	HybridSys	DAC346	
		DAC347	
		DAC356	
	MicroNet	**MN370**	**3044**
		MN371	**3044**
AD3860	HybridSys	HS3860	
	DDC	DAC-SL	
	MicroNet	**MN3860**	**3044**
AD502	TeledyneP	1413	
AD503	AD	AD0042	
	Intersil	AD503	
		LH0042	
	National	LH0042	
AD504	TeledyneP	1319-01	
AD506	National	LH0022	
		LM0052	
	TeledyneP	1424	
		1425	
AD507	Burr-Brown	3508	
	Datel	**AM-462-1**	**2864**
		AM-462-2	**2864**
	Harris	**HA-2620**	**3408**

(Continued)

◆ Discontinued

The manufacturers report their devices can be used as direct replacements.
Performance details often differ, so compare the specifications considering your requirements.

Analog Devices (Cont'd)

Manufacturer Device	Replacement Source	Device	IC Master Page
AD507	Harris	HA-2622	
		HA-2625	
	Intersil	HA2620	
		HA2622	
		HA2625	
AD510	AD	AD517	
		ADOP-07	**3351**
	Burr-Brown	3510	
	Datel	**AM-430**	**2864**
		AM-490-2	
	Fairchild	μA714	
	Harris	HA-2900	
		HA-2905	
		HA-5130	
		HA-5135	
	MicroPwr	MP517	
		MP5505	
		MP5507	
		OP-07	**3529**
	National	LH0044	
	NEC	μPC725	
	PMI	**OP-05**	**3566**
		OP-07	**3566**
	Raytheon	**OP-05**	**3592**
		OP-07	**3592**
	TeledyneP	1340	
	TI	OP-07	
AD515	Burr-Brown	3528	
	Harris	HM6116	
	IDT	IDT6116	
	MicroPwr	MP6116	
	Mitsubishi	M5K8725	
	OKI	**MSM2128**	**4118**
	SMOS	SMM2016	
	Toshiba	TC5516	
AD517	AD	AD510	
		ADOP-07	**3351**
	Burr-Brown	3510	
	Datel	**AM-430**	**2864**
		AM-490-2	
	Fairchild	μA714	
	Harris	HA-2900	
		HA-2905	
		HA-5130	
		HA-5135	
	MicroPwr	MP517	
		MP5505	
		MP5507	
		OP-07	**3529**
	National	LH0044	
	NEC	μPC725	
	PMI	**OP-05**	**3566**
		OP-07	**3566**
	Raytheon	**OP-05**	**3592**
		OP-07	**3592**
	TeledyneP	1340	
	TI	OP-07	
AD518	AMD	LM318	
	Fairchild	μA318	
	National	LM318	
	NEC	μPC159	
	TI	LM318	
	Thomson-CSF	TDB0118	
AD5201	**MicroNet**	**MN5201**	**3043**
AD5202	**MicroNet**	**MN5202**	**3043**
AD5203	**MicroNet**	**MN5203**	**3043**
AD5204	**MicroNet**	**MN5204**	**3043**
AD5205	**MicroNet**	**MN5205**	**3043**
AD5206	**MicroNet**	**MN5206**	**3043**
AD5207	MicroNet	MN5207	
AD5210	**Datel**	**ADC-5210**	**2860**
	DDC	DDC5210	
	MicroNet	**MN5210**	**3043**
AD5211	**Datel**	**ADC-5211**	**2860**
	DDC	DDC5211	
	MicroNet	**MN5211**	**3043**
AD5212	**Datel**	**ADC-5212**	**2860**
	DDC	DDC5212	
	MicroNet	**MN5212**	**3043**
AD5213	**Datel**	**ADC-5213**	**2860**
	MicroNet	**MN5213**	**3043**
AD5214	**Datel**	**ADC-5214**	**2860**
	HybridSys	MN5214	
	MicroNet	**MN5214**	**3043**
	TeledyneP	TP5214	
AD5215	**Datel**	**ADC-5215**	**2860**
	MicroNet	**MN5215**	**3043**
AD528	National	LH0062	
AD530	AD	AD533	
	Burr-Brown	**4203**	**2852**
	Intersil	ICL8013	
AD532	**Burr-Brown**	**4205**	**2852**
		4213	**2852,2853**
		4214	**2852**
AD533	AD	AD530	
	Burr-Brown	**4203**	**2852**
	Intersil	ICL8013	
AD540	Burr-Brown	3503	
	Datel	**AM-450-2**	**2864**
	Harris	HA-2505	
	Intersil	HA2505	
		HA2525	
	MicroPwr	MP5501	
	PMI	OP-01	
AD545	**Burr-Brown**	**OPA103**	**2850**
AD562	AMD	AM6012	
	Burr-Brown	DAC862	
	Datel	DAC-562	
	Harris	HI562	
	MCE	MCE-6012	
	MicroPwr	MP562	
	Motorola	**AD562**	**3069**
	NEC	μPC6012	
		μPC648	
	PMI	DAC-312	
		DAC312B12	
	Raytheon	DAC-6012	
		DAC6012	
	Signetics	**AM6012**	**3605**
	TeledyneP	4068	
AD562A/BCD	Analogic	MN562-AD-BCD	
AD563	Burr-Brown	DAC863	
	Motorola	**AD563**	**3069**
AD563J/BCD	Analogic	MN563-JD-BCD	
AD565	Fairchild	μA565	
	MCE	MCE-565	
AD565A	Harris	HI565A	
	TeledyneP	4089	
AD565J	**Motorola**	**MC3412**	**3067**
AD565S	**Motorola**	**MC3512**	**3067**
AD566	MCE	MCE-566	
AD570	MCE	MCE-570	
AD571	Fairchild	μA571	
	MCE	MCE-571	
AD574	HybridSys	HS574	
	MCE	MCE-574	
	MicroNet	MN574	
	MicroPwr	MP574	
AD583	**Datel**	**SHM-IC-1**	**2864**
	Harris	**HA-2425**	**2955**
	PMI	SMP-10	
		SMP-11	
	TeledyneP	4856	
AD589	Ferranti	ZN423	
	Intersil	**ICL8069**	**3521**
	MicroPwr	**MP5010**	**3529**
	National	LM113	
		LM313	
	TeledyneS	9491	
AD590	Intersil	AD590	
AD741	Fairchild	3871	
		μA741	
	Hitachi	HA17741	
	Intersil	AD741	
		ICL741	
	MicroPwr	MP5501	
		MP5502	**3529**
		OP-02	**3529**
	Mostek	MK3871	
	Motorola	LM741	
		MC1741	
	National	LM741	
	NEC	μPC151	
		μPC741	
	PMI	OP-01	
		OP-02	**3566**
		PM741	
		SSS741	
	Raytheon	RC741	
		RM741	
	RCA	CA3056	
		CA741	
	Signetics	μA741	
	SiliconG	SG300	
		SG741	
	TI	μA741	
	Thomson-CSF	SFC2741	
	Toshiba	TA7504	
AD741J	AMD	LM307	
	Intersil	LM307	
	LinearTech	LM307	
	Motorola	LM307	
	National	LM307	
	Raytheon	LM307	
	RCA	CA307	
	SiliconG	SG307	
	TI	LM307	
	Thomson-CSF	SFC2307	
AD741S	AMD	LM107	
	Intersil	LM107	
	LinearTech	LM107	
	National	LM107	
	Raytheon	LM107	
	SiliconG	SG107	
	TI	LM107	
	Thomson-CSF	SFC2107	
AD7501	Burr-Brown	MPC8S	
	Datel	**MX-808**	**2864**
	Harris	HI-508	
		HI508	
		HI508A	
	Intersil	IH6108	
	MicroPwr	MP7501	
		MP7508	
	National	LF11508	
		LF13508	
	PMI	DMX-08	
		MUX-08	
		MUX-88	
	Siliconix	DG508	
		DG508A	
	TeledyneP	4554	
AD7502	Hitachi	HD14052	
	MicroPwr	MP7502	
	National	CD4052	
	SSS	SCL4052	
	Solitron	CM4052	
	Toshiba	TC4052	
AD7503	**Datel**	**MV-808**	**2864**
	Harris	HI1818A	
	MicroPwr	MP7503	
AD7507	**Burr-Brown**	**MPC80**	**2850**
	Datel	**MVD-807**	**2864**
		MXD-807	**2864**
	Harris	HI507	
		HI507A	
	Intersil	IH6216	
	MicroPwr	MP7507	
	PMI	MUX-28	
	Siliconix	DG507	
		DG507A	
	TeledyneP	4551	
AD7510	MicroPwr	MP7510	
	PMI	SW7510	
AD7511	MicroPwr	MP7511	
	PMI	SW7511	
AD7512	MicroPwr	MP7512	
AD7520	Datel	DAC-HA10B	
	Intersil	AD7520	
	MicroPwr	MP7520	
	National	AD7520	
		DAC1020	
		DAC1021	
		DAC1022	
AD7521	Datel	DAC-HA12B	
	HybridSys	DAC331-12	
	Intersil	AD7521	
	MicroPwr	MP7521	
	National	AD7521	
		DAC1220	
		DAC1221	
		DAC1222	
AD7522	MicroPwr	MP7522	
AD7523	**Datel**	**DAC-7523**	**2863**
	Intersil	AD7523	
	MicroPwr	MP7523	
AD7524	MicroPwr	MP7524	
AD7528	**MicroPwr**	**MP7528**	**3046**
AD7530	**MicroPwr**	**MP7530**	**3046**
AD7531	MicroPwr	MP7531	
AD7533	**Datel**	**DAC-7533**	**2863**
	Intersil	AD7533	
	MicroPwr	MP7533	
	National	AD7533	
AD7541	**Datel**	**DAC-7541**	**2863**
	Harris	HI-7541	
		HI17541	
	HybridSys	HS7541	
AD7541	Intersil	AD7541	
		ICL7541	
	MicroPwr	MP7541	
		MP7621	
	TeledyneP	TP-7541	
		TP7541	
	TeledyneS	7541	
AD7542	MicroPwr	MP7542	
AD7543	MicroPwr	MP7543	
AD7545	MicroPwr	MP7545	
AD7546	MicroPwr	MP7616	
AD7550	MicroPwr	MP7550	
AD7570	MicroPwr	MP7570	
AD7574	MicroPwr	MP7574	
AD7581	MicroPwr	MP7581	
AD7622	HybridSys	HS3120	
	MicroPwr	MP7622	
	Siliconix	MP7622	
AD8007	Intersil	ICL8007	
ADAC1136	Burr-Brown	DAC736	
ADADC80	Burr-Brown	ADC80	
ADADC84	AD	ADADC85	
		ADADC85S	
	Burr-Brown	ADC84	
		ADC85	
	Datel	ADC-84	
		ADC-85	
		ADC-87	
		ADC-HX12B	
		ADC-HZ12B	
		ADC-HZ12BGZ	
	HybridSys	ADC581	
		ADC581B	
		HSADC85	
		HSADC85C	**2983**
	DDC	ADH8585-1	
		DDC5240	
		DDCADC85	
		DDCADC87	
	MicroNet	MN5240	
		MNADC84	
		MNADC85	
		MNADC87	**3043**
ADADC85	AD	ADADC84	
		ADADC85S	
	Burr-Brown	ADC84	
		ADC85	
	Datel	ADC-84	
		ADC-85	
		ADC-87	
		ADC-HX12B	
		ADC-HZ12B	
		ADC-HZ12BGZ	
	HybridSys	ADC581	
		ADC581B	
		HSADC85	
		HSADC85C	**2983**
	DDC	ADH8585-1	
		DDC5240	
		DDCADC85	
		DDCADC87	
	MicroNet	MN5240	
		MNADC84	
		MNADC85	
		MNADC87	**3043**
ADADC85S	AD	ADADC84	
		ADADC85	
	Burr-Brown	ADC84	
		ADC85	
	Datel	ADC-84	
		ADC-85	
		ADC-87	
		ADC-HX12B	
		ADC-HZ12B	
		ADC-HZ12BGZ	
	HybridSys	ADC581	
		ADC581B	
		HSADC85	
		HSADC85C	**2983**
	DDC	ADH8585-1	
		DDC5240	
		DDCADC85	
		DDCADC87	
	MicroNet	MN5240	
		MNADC84	
		MNADC85	
		MNADC87	**3043**
ADDAC-08	AMD	AM1408	
		SSS1408	
	AD	AD1408	
	Datel	DAC-08B	
		DAC-08C	

(Continued)

◆ Discontinued

Bold face device numbers indicate manufacturers data is provided in the IC Master on the pages noted.

© IC MASTER 1984

Analog Devices (Cont'd)

Manufacturer Device	Replacement Source	Device	IC Master Page
ADDAC-08	Datel	DAC-IC8B	
		DAC-IC8BC	**2863**
	Fairchild	DAC-08	
		MA0802M	
		μA0801	
		μA0802	
	Motorola	**DAC-08**	**3069**
		MC1408	
	National	DAC0800	
		DAC0801	
		DAC0802	
		DAC0806	
		DAC0807	
		DAC0808	
	NEC	μPC624	
	PMI	DAC-08	
		DAC-1408	
	Raytheon	**DAC-08**	**3591**
	Signetics	MC1408	
ADDAC71	Burr-Brown	DAC71	
		DAC72	
	Datel	DAC-71	
		DAC-72	
		DAC-HP16	
	MicroNet	MNDAC71	
ADDAC80	AD	ADDAC85	
	Burr-Brown	DAC80	
		DAC85	
	Datel	DAC-85	
		DAC-HZ12B	
	HybridSys	**DAC9356**	**2986**
		HSDAC80	
	MicroNet	**DAC80**	**3044**
		DAC85	
	National	DAC1280	
		DAC1285	
	TeledyneP	TPDAC80	
ADDAC85	AD	ADDAC80	
	Burr-Brown	DAC80	
		DAC85	
	~~Datel~~	~~DAC-85~~	
		DAC-HZ12B	
	HybridSys	**DAC9356**	**2986**
		HSDAC80	
	MicroNet	**DAC80**	**3044**
		DAC85	
	National	DAC1280	
		DAC1285	
	TeledyneP	TPDAC80	
ADDAC87	Burr-Brown	DAC851	
		DAC87	
	Datel	DAC-687	
		DAC-87	
	HybridSys	DAC335	
		HSDAC87	
	MicroNet	**MNDAC87**	**3044**
ADG200	Harris	HI200	
	Intersil	IH200	
	MicroPwr	MP200	
	PMI	SW-05	
	Siliconix	DG200	
ADG201	Harris	HI201	
	MicroPwr	MP201	
	National	LF11201	
		LF13201	
ADSHC85	**Burr-Brown**	**SHC85**	**2849**
ADVFC32	**Burr-Brown**	**VFC32**	**2849,2853**
	MCE	MCE-VFC32	
	MicroPwr	MPVFC32	
HDG0405	**MicroNet**	**MN0405**	**3044**
HDG0605	**MicroNet**	**MN0605**	**3044**
HDG0805	**MicroNet**	**MN0805**	**3044**
HTC-0300	DDC	THA-05203	
	TeledyneP	TP-4860	
HTC0300A	**MicroNet**	**MN0300A**	**3045**
		MN376	**3045**
		MN377	**3045**
	TeledyneP	4860	
MDG	Intech	0805H	
MDG-0405	Intech	0405H	
MDG-0605	Intech	0605H	
OP-07	AD	AD-OP07	
	Harris	HA-OP07	
	LinearTech	OP-07	
	PMI	**OP-07**	**3566**
	Raytheon	**OP-07**	**3592**
	TI	OP-07	

Analog Systems

Manufacturer Device	Replacement Source	Device	IC Master Page
LF357	AMD	LF357	
	Intersil	LF357	
	Motorola	LF357	
	National	LF357	
	PMI	PM357	
TL087	TI	TL087	
TL088	TI	TL088	

Analogic

Manufacturer Device	Replacement Source	Device	IC Master Page
MN562-AD-BCD	**AD**	**AD562A/BCD**	**2827,2829**
MN563-JD-BCD	**AD**	**AD563J/BCD**	**2826**

Apex Microtechnology

Manufacturer Device	Replacement Source	Device	IC Master Page
PA02	National	LH101	
PA73	**Burr-Brown**	**3573**	**2850**
PA83	**Burr-Brown**	**3583**	**2850**
PA84	**Burr-Brown**	**3584**	**2850**

Burr-Brown Research Corporation

Manufacturer Device	Replacement Source	Device	IC Master Page
3500	AMD	LM308	
	AD	**AD308**	**3351**
	Burr-Brown	3501	
	Fairchild	μA308	
	Intersil	AD308	
		LM308	
	MicroPwr	MP5505	
		MPLM308	**3529**
	Motorola	LM308	
	National	LM308	
	Raytheon	LM308	
	SiliconG	SG308	
	Thomson-CSF		
		SFC2308	
3501	AMD	LM308	
	AD	**AD308**	**3351**
	Burr-Brown	3500	
	Fairchild	μA308	
	Intersil	AD308	
		LM308	
	MicroPwr	MP5505	
		MPLM308	**3529**
	Motorola	LM308	
	National	LM308	
	Raytheon	LM308	
	SiliconG	SG308	
	Thomson-CSF		
		SFC2308	
3503	AD	AD540	
	Datel	**AM-450-2**	**2864**
	Harris	HA-2505	
	Intersil	HA2505	
		HA2525	
	MicroPwr	MP5501	
	PMI	OP-01	
3508	AD	AD507	
	Datel	**AM-462-1**	**2864**
		AM-462-2	**2864**
	Harris	**HA-2620**	**3408**
		HA-2622	
		HA-2625	
	Intersil	HA2620	
		HA2622	
		HA2625	
3510	AD	AD510	
		AD517	
		ADOP-07	**3351**
	Datel	**AM-430**	**2864**
		AM-490-2	
	Fairchild	μA714	
	Harris	HA-2900	
		HA-2905	
		HA-5130	
		HA-5135	
	MicroPwr	MP517	
		MP5505	
		MP5507	
		OP-07	**3529**
	National	LH0044	
	NEC	μPC725	
	PMI	**OP-05**	**3566**
		OP-07	**3566**
	Raytheon	**OP-05**	**3592**
		OP-07	**3592**
	TeledyneP	1340	
	TI	OP-07	

Manufacturer Device	Replacement Source	Device	IC Master Page
3528	AD	AD515	
	Harris	HM6116	
	IDT	IDT6116	
	MicroPwr	MP6116	
	Mitsubishi	M5K8725	
	OKI	**MSM2128**	**4118**
	SMOS	SMM2016	
	Toshiba	TC5516	
3542	AD	AD3542	
3554	TeledyneP	3554	
3573	Apex	PA73	
3583	Apex	PA83	
3584	Apex	PA84	
4203	AD	AD530	
		AD533	
	Intersil	ICL8013	
4205	AD	AD532	
	~~**Burr-Brown**~~	~~**4213**~~	~~**2852,2853**~~
		4214	**2852**
4213	AD	AD532	
	Burr-Brown	**4205**	**2852**
		4214	**2852**
4214	AD	AD532	
	Burr-Brown	**4205**	**2852**
		4213	**2852,2853**
ADC80	AD	ADADC80	
ADC82	HybridSys	ADC542	
		HSADC82	
ADC84	AD	ADADC84	
		ADADC85	
		ADADC85S	
	Burr-Brown	ADC85	
	Datel	ADC-84	
		ADC-85	
		ADC-87	
		ADC-HX12B	
		ADC-HZ12B	
		ADC-HZ12BGZ	
	HybridSys	ADC581	
		ADC581B	
		HSADC85	
		HSADC85C	**2983**
	DDC	ADH8585-1	
		DDC5240	
		~~DDCADC85~~	
		DDCADC87	
	MicroNet	MN5240	
		MNADC84	
		MNADC85	
		MNADC87	**3043**
ADC85	AD	ADADC84	
		ADADC85	
		ADADC85S	
	Burr-Brown	ADC84	
	Datel	ADC-84	
		ADC-85	
		ADC-87	
		ADC-HX12B	
		ADC-HZ12B	
		ADC-HZ12BGZ	
	HybridSys	ADC581	
		ADC581B	
		HSADC85	
		HSADC85C	**2983**
	DDC	ADH8585-1	
		DDC5240	
		DDCADC85	
		DDCADC87	
	MicroNet	MN5240	
		MNADC84	
		MNADC85	
		MNADC87	**3043**
DAC71	AD	ADDAC71	
	Burr-Brown	DAC72	
	Datel	DAC-71	
		DAC-72	
		DAC-HP16	
	MicroNet	MNDAC71	
DAC72	AD	ADDAC71	
	Burr-Brown	DAC71	
	Datel	DAC-71	
		DAC-72	
		DAC-HP16	
	MicroNet	MNDAC71	
DAC736	AD	ADAC1136	
DAC80	AD	ADDAC80	
		ADDAC85	
	Burr-Brown	DAC85	
	Datel	DAC-85	
		DAC-HZ12B	
	HybridSys	**DAC9356**	**2986**
		HSDAC80	

(Continued)

Manufacturer Device	Replacement Source	Device	IC Master Page
DAC80	**MicroNet**	**DAC80**	**3044**
		DAC85	
	National	DAC1280	
		DAC1285	
	TeledyneP	TPDAC80	
DAC85	AD	ADDAC80	
		ADDAC85	
	Burr-Brown	DAC80	
	Datel	DAC-85	
		DAC-HZ12B	
	HybridSys	**DAC9356**	**2986**
		HSDAC80	
	MicroNet	**DAC80**	**3044**
		DAC85	
	National	DAC1280	
		DAC1285	
	TeledyneP	TPDAC80	
DAC85/CCD	~~National~~	~~DAC1287~~	
DAC851	AD	ADDAC87	
	Burr-Brown	DAC87	
	Datel	DAC-687	
		DAC-87	
	HybridSys	DAC335	
		HSDAC87	
	MicroNet	**MNDAC87**	**3044**
DAC862	AMD	AM6012	
	AD	AD562	
	Datel	DAC-562	
	Harris	HI562	
	MCE	MCE-6012	
	MicroPwr	MP562	
	Motorola	**AD562**	**3069**
	NEC	μPC6012	
		μPC648	
	PMI	DAC-312	
		DAC312B12	
	Raytheon	DAC-6012	
		DAC6012	
	Signetics	**AM6012**	**3605**
	TeledyneP	4068	
DAC863	AD	AD563	
	Motorola	**AD563**	**3069**
DAC87	AD	ADDAC87	
	Burr-Brown	DAC851	
	~~Datel~~	~~DAC-687~~	
		DAC-87	
	HybridSys	DAC335	
		HSDAC87	
	MicroNet	**MNDAC87**	**3044**
INA101	MicroPwr	MPINA101	
MPC16S	**Datel**	**MV-1606**	**2864**
		MX-1606	**2864**
	Harris	HI1840	
		HI506	
		HI506A	
	Intersil	IH6116	
	PMI	MUX-16	
MPC4D	**Datel**	**MXD-409**	**2864**
	Harris	HI-509	
		HI509	
		HI509A	
	Intersil	IH6208	
	MicroPwr	MP7509	
	National	LF11509	
		LF13509	
	PMI	MUX-24	
	Siliconix	DG509	
		DG509A	
	TeledyneP	4553	
MPC800	**Datel**	**MX-1616**	**2864**
	Harris	HA-516	
MPC801	**Datel**	**MX-818**	**2864**
	Harris	HA-518	
MPC8D	AD	AD7507	
	Datel	**MVD-807**	**2864**
		MXD-807	**2864**
	Harris	HI507	
		HI507A	
	Intersil	IH6216	
	MicroPwr	MP7507	
	PMI	MUX-28	
	Siliconix	DG507	
		DG507A	
	TeledyneP	4551	
MPC8S	AD	AD7501	
	Datel	**MX-808**	**2864**
	Harris	HI-508	
		HI508	
		HI508A	
	Intersil	IH6108	
	MicroPwr	MP7501	
		MP7508	

(Continued)

◆ Discontinued

The manufacturers report their devices can be used as direct replacements.
Performance details often differ, so compare the specifications considering your requirements.

Burr-Brown Research Corporation (Cont'd)

Manufacturer Device	Replacement Source	Device	IC Master Page
MPC8S	National	LF11508	
		LF13508	
	PMI	DMX-88	
		MUX-08	
		MUX-88	
	Siliconix	DG508	
		DG508A	
	TeledyneP	4554	
OPA103	AD	AD545	
OPA37	PMI	OP-34	
	Raytheon	OP-37	
OPA605	OEI	AH0605	
SHC85	AD	ADSHC85	
VFC32	AD	ADVFC32	
	MCE	MCE-VFC32	
	MicroPwr	MPVFC32	

California Devices

Manufacturer Device	Replacement Source	Device	IC Master Page
HC10000	**AMI**	**UA-5**	**4619**
	LSILogic	**LC10000**	**4762**
HC12600	**AMI**	**UA-6**	**4619**
	LSILogic	**LC12600**	**4762**
HC3100	**AMI**	**UA-1**	**4619**
	LSILogic	**LC3100**	**4762**
HC4100	**AMI**	**UA-2**	**4619**
	LSILogic	**LC4100**	**4762**
HC5400	**AMI**	**UA-3**	**4619**
	LSILogic	**LC5400**	**4762**
HC7700	**AMI**	**UA-4**	**4619**
	LSILogic	**LC7700**	**4762**

Cherry Semiconductor

Manufacturer Device	Replacement Source	Device	IC Master Page
CS1200	Exar	XR1200	
CS1300	Exar	XR1300	
CS1400	Exar	XR1400	
CS166	Sprague	ULN-2429	
CS2000	Exar	XRE100	
	Interdesign	**MOE**	**4746**
	MCE	MCE-A20E	
CS250	Dionics	DI250	
CS2500	Exar	XRG100	
	Interdesign	**MOG**	**4746**
	MCE	MCE-A20G	
CS260	Dionics	DI260	
CS263	Philips	TAA263	
CS2907-D14	National	LM2907	
CS2917	National	LM2917	
CS3000	Exar	XRF100	
	Interdesign	**MCF**	**4746**
		MOF	**4746**
	MCE	MCE-A20F	
CS3200	**Interdesign**	**MOL**	**4746**
	MCE	MCE-A20L	
CS4000	Interdesign	ADVFC32	
CS555	Exar	XR555	
	Fairchild	μA555	
	Hitachi	HA17555	
	Motorola	MC1455	
	National	LM555	
	NEC	μPC1555	
	Raytheon	RC555	
	RCA	CA355	
		CA555	**3604**
	Sanyo	LB8555	
	Signetics	NE555	
	SiliconG	SG555	
	TI	NE555	
CS8204	Mitel	ML8204	
CS8205	Mitel	ML8205	

Circuit Technology Inc.

Manufacturer Device	Replacement Source	Device	IC Master Page
CT-1077	CTI	CT-2077	
		CT-3077	
	DDC	BUS-8556	
CT-2077	CTI	CT-1077	
		CT-3077	
	DDC	BUS-8556	
CT-3077	CTI	CT-1077	
		CT-2077	
	DDC	BUS-8556	
CT-3231	CTI	CT-3232	
	DDC	BUS-8554	
		BUS63102	
CT-3232	CTI	CT-3231	
	DDC	BUS-8554	
		BUS63102	

Commodore Semiconductor Group

Manufacturer Device	Replacement Source	Device	IC Master Page
◆MP6551	**AMI**	**S6551**	**1449**
	Rockwell	R6551	
	Synertek	**SY6551**	**1696**
◆MPS2316	AMD	AM9218	
	Fairchild	3516	
		68316	
		F3516	
		F35316	
		F68316	**1464**
	GI	R03-9316	
	GTEMicro	2316	
	Intel	2316	
	Mostek	MK34000	
	Motorola	MCM68316	
		MCM68A316	
		MM2316	
	National	MM52116	
		MM5258	
	NCR	2316	
		NCR2316	
	NEC	μPD2316	
	OKI	**MSM2916**	**4118**
	Rockwell	R2316	
	SGS	M2316	
	TI	SBP8316	
	Toshiba	TMM331A	
		TMM334	
◆MPS2332	AMD	AM9232	
	AMI	S68322	
		S68A332	
	Fairchild	F3532	
	GI	R094132	
		T094132	
	GTEMicro	2332	
	Hitachi	HN46332	
	Intersil	IM7332	
	Motorola	MC68332	
		MCM68332	
		MCM68A332	**4048**
	National	MM52132	
	NCR	2332	
		NCR2332	
	NEC	**μPD2332**	**4100**
	OKI	**MSM2932**	**4118**
	RCA	**CDM5333**	**1593**
	Rockwell	R2332	
	SiliconG	SG3532	
	SSS	SCM23C32	
	SMC	ROM4732	
	Synertek	**SY2332**	**4211**
	TI	**TMS4732**	**4226**
	Toshiba	TM2332	
		TMM333	
	Universal	UM2332	
	VTI	**VT2332**	**4249**
◆MPS2333	AMD	AM9233	
	AMI	**S2333**	**3932**
	Fairchild	F3533	
	GI	R09433	
	Intel	2332	
	NCR	2333	
		NCR2333	
	RCA	**CDM5332**	**1593**
	Signetics	2332	
	SSS	SCM23C33	
	Synertek	**SY2333**	**4211**
	Universal	UM2333-45	
	VTI	**VT2333**	**4249**
◆MPS4118	Mostek	MK4118A	
		MK4801A	
	Rockwell	R8118	
◆MPS6500/1	Rockwell	R6500/1	
	Synertek	SY6500/1	
◆MPS6502	Rockwell	R6502	
	Synertek	**SY6502**	**1696**
◆MPS6503	Rockwell	R6503	
	Synertek	**SY6503**	**1696**
◆MPS6504	Rockwell	R6504	
	Synertek	**SY6504**	**1696**
◆MPS6505	Rockwell	R6505	
	Synertek	**SY6505**	**1696**
◆MPS6506	Rockwell	R6506	
	Synertek	**SY6506**	**1696**
◆MPS6507	Rockwell	R6507	
	Synertek	**SY6507**	**1696**
◆MPS6512	Rockwell	R6512	
	Synertek	**SY6512**	**1696**
◆MPS6514	Rockwell	R6514	
	Synertek	**SY6514**	**1696**
◆MPS6515	Rockwell	R6515	
	Synertek	**SY6515**	**1696**
◆MPS6520	Rockwell	R6520	
	Synertek	**SY6520**	**1696**
◆MPS6522	Rockwell	R6522	
	Synertek	**SY6522**	**1696**
◆MPS6532	Rockwell	R6532	
	Synertek	**SY6532**	**1696**
◆MPS6545	Hitachi	HD6845	
	Motorola	**MC6845**	**1505**
	Rockwell	R6545	
◆MPS6551	**AMI**	**S6551**	**1449**
	Rockwell	R6551	
	Synertek	**SY6551**	**1696**

Data Translation

Manufacturer Device	Replacement Source	Device	IC Master Page
DT5712	Intech	DAS5712	
DT5714	Intech	DAS5714	
DT5716	Intech	DAS5716	

Datel

Manufacturer Device	Replacement Source	Device	IC Master Page
ADC-5101	DDC	DDC5101	
	MicroNet	**MN5101**	**3043**
ADC-5210	**AD**	**AD5210**	**2838**
	DDC	DDC5210	
	MicroNet	**MN5210**	**3043**
ADC-5211	**AD**	**AD5211**	**2838**
	DDC	DDC5211	
	MicroNet	**MN5211**	**3043**
ADC-5212	AD	AD5212	
	DDC	DDC5212	
	MicroNet	**MN5212**	**3043**
ADC-5213	AD	AD5213	
	MicroNet	**MN5213**	**3043**
ADC-5214	**AD**	**AD5214**	**2838**
	HybridSys	MN5214	
	MicroNet	**MN5214**	**3043**
	TeledyneP	TP5214	
ADC-5215	AD	AD5215	
	MicroNet	**MN5215**	**3043**
ADC-5216	HybridSys	HS5216	
	DDC	DDC5216	
	MicroNet	**MN5216**	**3043**
ADC-7109	**Intersil**	**ICL7109**	**2996**
	TeledyneS	TSC7109	
ADC-830	**Intersil**	**ADC0803**	**2993**
	National	ADC0803	
	TI	ADC0803	
ADC-84	AD	ADADC84	
		ADADC85	
		ADADC85S	
	Burr-Brown	ADC84	
		ADC85	
	Datel	ADC-85	
		ADC-87	
		ADC-HX12B	
		ADC-HZ12B	
		ADC-HZ12BGZ	
	HybridSys	ADC581	
		ADC581B	
		HSADC85	
		HSADC85C	**2983**
	DDC	ADH8585-1	
		DDC5240	
		DDCADC85	
		DDCADC87	
	MicroNet	MN5240	
		MNADC84	
		MNADC85	
		MNADC87	**3043**
ADC-847	Ferranti	ZN449	
ADC-847A	Ferranti	ZN447E	
ADC-847B	Ferranti	ZN447J	
ADC-847C	Ferranti	ZN449E	
ADC-85	AD	ADADC84	
		ADADC85	
		ADADC85S	
	Burr-Brown	ADC84	
		ADC85	
	Datel	ADC-84	
		ADC-87	
		ADC-HX12B	
		ADC-HZ12B	
		ADC-HZ12BGZ	
	HybridSys	ADC581	
		ADC581B	
		HSADC85	
		HSADC85C	**2983**
	DDC	ADH8585-1	
		DDC5240	
		DDCADC85	
		DDCADC87	
	MicroNet	MN5240	
		MNADC84	
		MNADC85	
		MNADC87	**3043**
ADC-856	Ferranti	ZN433	
ADC-87	AD	ADADC84	
		ADADC85	
		ADADC85S	
	Burr-Brown	ADC84	
		ADC85	
	Datel	ADC-84	
		ADC-85	
		ADC-HX12B	
		ADC-HZ12B	
		ADC-HZ12BGZ	
	HybridSys	ADC581	
		ADC581B	
		HSADC85	
		HSADC85C	**2983**
	DDC	ADH8585-1	
		DDC5240	
		DDCADC85	
		DDCADC87	
	MicroNet	MN5240	
		MNADC84	
		MNADC87	**3043**
ADC-883	**RCA**	**CA3300**	**3600**
ADC-EH12B	DDC	ADC4454	
	TeledyneP	TP4134	
ADC-EK10B	TeledyneP	4141	
	TeledyneS	8701	
ADC-EK12B	TeledyneP	4142	
	TeledyneS	8702	
ADC-EK12D	TeledyneP	4146	
	TeledyneS	8750	
ADC-EK8B	TeledyneP	4140	
	TeledyneS	8700	
ADC-ET10B	TeledyneP	4144	
	TeledyneS	8704	
ADC-ET12B	TeledyneP	4145	
	TeledyneS	8705	
ADC-ET8B	TeledyneP	4143	
	TeledyneS	8703	
ADC-HX12B	AD	ADADC84	
		ADADC85	
		ADADC85S	
	Burr-Brown	ADC84	
		ADC85	
	Datel	ADC-84	
		ADC-85	
		ADC-87	
		ADC-HZ12B	
		ADC-HZ12BGZ	
	HybridSys	ADC581	
		ADC581B	
		HSADC85	
		HSADC85C	**2983**
	DDC	ADH8585-1	
		DDC5240	
		DDCADC85	
		DDCADC87	
	MicroNet	MN5240	
		MNADC84	
		MNADC85	
		MNADC87	**3043**
ADC-HZ12B	AD	ADADC84	
		ADADC85	
		ADADC85S	
	Burr-Brown	ADC84	
		ADC85	
	Datel	ADC-84	
		ADC-85	
		ADC-87	
		ADC-HX12B	
		ADC-HZ12BGZ	
	HybridSys	ADC581	
		ADC581B	
		HSADC85	
		HSADC85C	**2983**
	DDC	ADH8585-1	
		DDC5240	
		DDCADC85	
		DDCADC87	
	MicroNet	MN5240	
		MNADC84	

(Continued)

(Continued)

◆ Discontinued

Bold face device numbers indicate manufacturers data is provided in the IC Master on the pages noted.

© IC MASTER 1984

Datel (Cont'd)

Manufacturer Device	Replacement Source	Device	IC Master Page
ADC-HZ12B	MicroNet	MNADC85	
		MNADC87	**3043**
ADC-HZ12BGZ	AD	ADADC84	
		ADADC85	
		ADADC85S	
	Burr-Brown	ADC84	
		ADC85	
	Datel	ADC-84	
		ADC-85	
		ADC-87	
		ADC-HX12B	
		ADC-HZ12B	
	HybridSys	ADC581	
		ADC581B	
		HSADC85	
		HSADC85C	**2963**
	DDC	ADH8585-1	
		DDC5240	
		DDCADC85	
		DDCADC87	
	MicroNet	MN5240	
		MNADC84	
		MNADC85	
		MNADC87	**3043**
ADC-MC8	Ferranti	ZN425	
ADC815	MicroNet	MN815	
ADC825	MicroNet	MN825	
AM-410-2	Harris	HA-5105	
AM-410-2M	Harris	HA-5100	
AM-411-2	Harris	HA-5115	
AM-411-2M	Harris	HA-5110	
AM-427	LinearTech	OP-27	
	MicroPwr	**MP5527**	**3529**
		OP-27	**3529**
	PMI	OP-27	
	Raytheon	OP-27	
AM-430	AD	AD510	
		AD517	
		ADOP-07	**3351**
	Burr-Brown	3510	
	Datel	AM-490-2	
	Fairchild	μA714	
	Harris	HA-2900	
		HA-2905	
		HA-5130	
		HA-5135	
	MicroPwr	MP517	
		MP5505	
		MP5507	
		OP-07	**3529**
	National	LH0044	
	NEC	μPC725	
	PMI	**OP-05**	**3566**
		OP-07	**3566**
	Raytheon	**OP-05**	**3592**
		OP-07	**3592**
	TeledyneP	1340	
	TI	OP-07	
AM-450-2	AD	AD540	
	Burr-Brown	3503	
	Harris	HA-2505	
	Intersil	HA2505	
		HA2525	
	MicroPwr	MP5501	
	PMI	OP-01	
AM-450-2M	Harris	HA-2502	
	Intersil	HA2502	
AM-452-2M	Harris	HA-2522	
	Intersil	HA2522	
AM-453-2C	**Exar**	**XR5534**	**3379**
	Raytheon	**RC5534**	**3592**
	Signetics	NE5534	
		NE5534A	**3646**
	TI	NE5534	
		NE5534A	
AM-453-2M	Raytheon	RM5534	
	Signetics	**SE5534**	**526**
		SE5534A	**526,3646**
AM-460-2	Harris	HA-2605	
	Intersil	HA2605	
	Motorola	MC1456	
	SiliconG	SG1456	
	TI	MC1456	
AM-460-2M	Harris	HA-2602	
	Intersil	HA2602	
AM-462-1	AD	AD507	
	Burr-Brown	3508	
	Datel	**AM-462-2**	**2864**
	Harris	**HA-2620**	**3408**
		HA-2622	

(Continued)

Manufacturer Device	Replacement Source	Device	IC Master Page
AM-462-1	Harris	HA-2625	
	Intersil	HA2620	
		HA2622	
		HA2625	
AM-462-2	AD	AD507	
	Burr-Brown	3508	
	Datel	**AM-462-1**	**2864**
	Harris	**HA-2620**	**3408**
		HA-2622	
		HA-2625	
	Intersil	HA2620	
		HA2622	
		HA2625	
AM-464-2	Harris	HA-2645	
	Motorola	MC1436	
		MC1439	
	National	LM1436	
		LM343	
	SiliconG	SG1436	
	TeledyneP	1332	
AM-464-2M	**Exar**	**XR1527A**	**3381**
	Harris	**HA-2640**	**3412**
	Motorola	MC1536	
	National	LM143	
		LM1536	
	SiliconG	SG1536	
AM-470-2	**Datel**	**AM-470-2C**	**2865**
		AM-470-2M	**2865**
	Harris	HA-2700	
		HA-2704	
		HA-2705	
	TeledyneP	1323	
AM-470-2C	Datel	AM-470-2	
		AM-470-2M	**2865**
	Harris	HA-2700	
		HA-2704	
		HA-2705	
	TeledyneP	1323	
AM-470-2M	Datel	AM-470-2	
		AM-470-2C	**2865**
	Harris	HA-2700	
		HA-2704	
		HA-2705	
	TeledyneP	1323	
AM-490-2	AD	AD510	
		AD517	
		ADOP-07	**3351**
	Burr-Brown	3510	
	Datel	**AM-430**	**2864**
	Fairchild	μA714	
	Harris	HA-2900	
		HA-2905	
		HA-5130	
		HA-5135	
	MicroPwr	MP517	
		MP5505	
		MP5507	
		OP-07	**3529**
	National	LH0044	
	NEC	μPC725	
	PMI	**OP-05**	**3566**
		OP-07	**3566**
	Raytheon	**OP-05**	**3592**
		OP-07	**3592**
	TeledyneP	1340	
	TI	OP-07	
AM-500	TeledyneP	1430	
AM-7650	Intersil	ICL7650	
	Telmos	TM7650	
DAC-08B	AMD	AM1408	
		SSS1408	
	AD	AD1408	
		ADDAC-08	
	Datel	DAC-I8BC	
		DAC-IC8B	
		DAC-IC8BC	**2863**
	Fairchild	DAC-08	
		MA0802M	
		μA0801	
		μA0802	
	Motorola	**DAC-08**	**3069**
		MC1408	
	National	DAC0800	
		DAC0801	
		DAC0802	
		DAC0806	
		DAC0807	
		DAC0808	
	NEC	μPC624	
	PMI	DAC-08	
		DAC-1408	

(Continued)

Manufacturer Device	Replacement Source	Device	IC Master Page
DAC-08B	**Raytheon**	**DAC-08**	**3591**
	Signetics	MC1408	
DAC-562	AMD	AM6012	
	AD	AD562	
	Burr-Brown	DAC862	
	Harris	HI562	
	MCE	MCE-6012	
	MicroPwr	MP562	
	Motorola	**AD562**	**3069**
	NEC	μPC6012	
		μPC648	
	PMI	DAC-312	
		DAC312B12	
	Raytheon	DAC-6012	
		DAC6012	
	Signetics	**AM6012**	**3605**
	TeledyneP	4068	
DAC-608	National	DAC0832	
DAC-610	National	DAC1006	
DAC-612	MicroPwr	MP1208	
	National	DAC1208	
◆DAC-681	AMD	AM6012	
	AD	AD562	
	Burr-Brown	DAC862	
	Datel	DAC-562	
	Harris	HI562	
	MCE	MCE-6012	
	MicroPwr	MP562	
	Motorola	**AD562**	**3069**
	NEC	μPC6012	
		μPC648	
	PMI	DAC-312	
		DAC312B12	
	Raytheon	DAC-6012	
		DAC6012	
	Signetics	**AM6012**	**3605**
	TeledyneP	4068	
DAC-687	AD	ADDAC87	
	Burr-Brown	DAC851	
		DAC87	
	Datel	DAC-87	
	HybridSys	DAC335	
		HSDAC87	
	MicroNet	**MNDAC87**	**3044**
DAC-71	AD	ADDAC71	
	Burr-Brown	DAC71	
		DAC72	
	Datel	DAC-72	
		DAC-HP16	
	MicroNet	MNDAC71	
DAC-72	AD	ADDAC71	
	Burr-Brown	DAC71	
		DAC72	
	Datel	DAC-71	
		DAC-HP16	
	MicroNet	MNDAC71	
DAC-7523	AD	AD7523	
	Intersil	AD7523	
	MicroPwr	MP7523	
DAC-7533	AD	AD7533	
	Intersil	AD7533	
	MicroPwr	MP7533	
	National	AD7533	
DAC-7541	AD	AD7541	
	Harris	HI-7541	
		HI17541	
	HybridSys	HS7541	
	Intersil	AD7541	
		ICL7541	
	MicroPwr	MP7541	
		MP7621	
	TeledyneP	TP-7541	
		TP7541	
	TeledyneS	7541	
DAC-85	AD	ADDAC80	
		ADDAC85	
	Burr-Brown	DAC80	
		DAC85	
	Datel	DAC-HZ12B	
	HybridSys	**DAC9356**	**2986**
		HSDAC80	
	MicroNet	**DAC80**	**3044**
		DAC85	
	National	DAC1280	
		DAC1285	
	TeledyneP	TPDAC80	
DAC-87	AD	ADDAC87	
	Burr-Brown	DAC851	
		DAC87	
	Datel	DAC-687	
	HybridSys	DAC335	

(Continued)

Manufacturer Device	Replacement Source	Device	IC Master Page
DAC-87	HybridSys	HSDAC87	
	MicroNet	**MNDAC87**	**3044**
DAC-HA10B	AD	AD7520	
	Intersil	AD7520	
	MicroPwr	MP7520	
	National	AD7520	
		DAC1020	
		DAC1021	
		DAC1022	
DAC-HA12B	AD	AD7521	
	HybridSys	DAC331-12	
	Intersil	AD7521	
	MicroPwr	MP7521	
	National	AD7521	
		DAC1220	
		DAC1221	
		DAC1222	
DAC-HA14	HybridSys	HS3140	
	MicroPwr	MP3140	
DAC-HK	MicroNet	MNDACHK	
DAC-HK12BGC	Intech	DAC-HK12BGC	
DAC-HK12BMM	Intech	DAC-HK12BMM	
DAC-HP16	AD	ADDAC71	
	Burr-Brown	DAC71	
		DAC72	
	Datel	DAC-71	
		DAC-72	
	MicroNet	MNDAC71	
DAC-HZ12B	AD	ADDAC80	
		ADDAC85	
	Burr-Brown	DAC80	
		DAC85	
	Datel	DAC-85	
	HybridSys	**DAC9356**	**2986**
		HSDAC80	
	MicroNet	**DAC80**	**3044**
		DAC85	
	National	DAC1280	
		DAC1285	
	TeledyneP	TPDAC80	
DAC-I8BC	AMD	AM1408	
		SSS1408	
	AD	AD1408	
		ADDAC-08	
	Datel	DAC-08B	
		DAC-IC8B	
		DAC-IC8BC	**2863**
	Fairchild	DAC-08	
		MA0802M	
		μA0801	
		μA0802	
	Motorola	**DAC-08**	**3069**
		MC1408	
	National	DAC0800	
		DAC0801	
		DAC0802	
		DAC0806	
		DAC0807	
		DAC0808	
	NEC	μPC624	
	PMI	DAC-08	
		DAC-1408	
	Raytheon	**DAC-08**	**3591**
	Signetics	MC1408	
DAC-IC10B	PMI	DAC-10	
	Raytheon	DAC-10	
DAC-IC10BM	**Signetics**	**SE5410**	**3612**
DAC-IC8B	AMD	AM1408	
		SSS1408	
	AD	AD1408	
		ADDAC-08	
	Datel	DAC-08B	
		DAC-I8BC	
		DAC-IC8BC	**2863**
	Fairchild	DAC-08	
		MA0802M	
		μA0801	
		μA0802	
	Motorola	**DAC-08**	**3069**
		MC1408	
	National	DAC0800	
		DAC0801	
		DAC0802	
		DAC0806	
		DAC0807	
		DAC0808	
	NEC	μPC624	
	PMI	DAC-08	
		DAC-1408	
	Raytheon	**DAC-08**	**3591**
	Signetics	MC1408	

◆ Discontinued

The manufacturers report their devices can be used as direct replacements.
Performance details often differ, so compare the specifications considering your requirements.

Datel (Cont'd)

Manufacturer Device	Replacement Source	Device	IC Master Page
DAC-IC8BC	AMD	AM1408	
		SSS1408	
	AD	AD1408	
		ADDAC-08	
	Datel	DAC-08B	
		DAC-I8BC	
		DAC-IC8B	
	Fairchild	DAC-08	
		MA0802M	
		μA0801	
		μA0802	
	Motorola	**DAC-08**	**3069**
		MC1408	
	National	DAC0800	
		DAC0801	
		DAC0802	
		DAC0806	
		DAC0807	
		DAC0808	
	NEC	μPC624	
	PMI	DAC-08	
		DAC-1408	
	Raytheon	**DAC-08**	**3591**
	Signetics	MC1408	
DAC-IC8BM	Motorola	MC1508	
	PMI	DAC-1508	
	Signetics	MC1508	
		SE5008	
		SE5009	
DAC-UP10	**Signetics**	**NE5020**	**3608**
DAC-UP8B	AMD	AM6081	
	Signetics	NE5018	
		NE5019	**3607**
		NE5118	
		NE5119	**3611**
DAS-952	Mostek	MK50816	
	National	ADC0816	
	TI	ADC0816	
HDAS-16	Datel	HDAS-8	
	MicroNet	**MN7150**	**3042**
HDAS-8	Datel	HDAS-16	
	MicroNet	**MN7150**	**3042**
MV-1606	**Burr-Brown**	**MPC16S**	**2850**
	Datel	**MV-1606**	**2864**
	Harris	HI1840	
		HI506	
		HI506A	
	Intersil	IH6116	
	PMI	MUX-16	
MV-808	AD	AD7503	
	Harris	HI1818A	
	MicroPwr	MP7503	
MVD-409	Harris	HI1828A	
MVD-807	AD	AD7507	
	Burr-Brown	**MPC8D**	**2850**
	Datel	**MXD-807**	**2864**
	Harris	HI507	
		HI507A	
	Intersil	IH6216	
	MicroPwr	MP7507	
	PMI	MUX-28	
	Siliconix	DG507	
		DG507A	
	TeledyneP	4551	
MX-1606	**Burr-Brown**	**MPC16S**	**2850**
	Datel	**MV-1606**	**2864**
	Harris	HI1840	
		HI506	
		HI506A	
	Intersil	IH6116	
	PMI	MUX-16	
MX-1616	**Burr-Brown**	**MPC800**	**2850**
	Harris	HA-516	
MX-808	AD	AD7501	
	Burr-Brown	MPC8S	
	Harris	HI-508	
		HI508	
		HI508A	
	Intersil	IH6108	
	MicroPwr	MP7501	
		MP7508	
	National	LF11508	
		LF13508	
	PMI	DMX-88	
		MUX-08	
		MUX-88	
	Siliconix	DG508	
		DG508A	
	TeledyneP	4554	
MX-818	**Burr-Brown**	**MPC801**	**2850**
	Harris	HA-518	
MXD-409	**Burr-Brown**	**MPC4D**	**2850**
	Harris	HI-509	
		HI509	
		HI509A	
	Intersil	IH6208	
	MicroPwr	MP7509	
	National	LF11509	
		LF13509	
	PMI	MUX-24	
	Siliconix	DG509	
		DG509A	
	TeledyneP	4553	
MXD-807	AD	AD7507	
	Burr-Brown	**MPC8D**	**2850**
	Datel	**MVD-807**	**2864**
	Harris	HI507	
		HI507A	
	Intersil	IH6216	
	MicroPwr	MP7507	
	PMI	MUX-28	
	Siliconix	DG507	
		DG507A	
	TeledyneP	4551	
SHM-20	Harris	HA-5320	
SHM-20C	**Harris**	**HA-5320-5**	**2958**
SHM-20M	**Harris**	**HA-5320-2**	**2958**
SHM-IC-1	AD	AD583	
	~~Harris~~	~~HA-2425~~	~~2955~~
	PMI	SMP-10	
		SMP-11	
	TeledyneP	4856	
VFQ-1	TeledyneP	4780	
	TeledyneS	9400	
VFQ-2	TeledyneP	4781	
	TeledyneS	9401	
VFQ-3	TeledyneP	4782	
	TeledyneS	9402	
VI-7660	**Intersil**	**ICL7660**	**3498**
	TeledyneC	TSC7660	
VR-182	Ferranti	ZN458	
◆VR-8069	AD	AD589	
	Ferranti	ZN423	
	Intersil	**ICL8069**	**3521**
	MicroPwr	**MP5010**	**3529**
	National	LM113	
		LM313	
	TeledyneS	9491	

Dionics Inc.

Device	Replacement Source	Device
DI250	Cherry	CS250
DI260	Cherry	CS260
DI510	Sprague	UDN-6510
DI512	Sprague	UDN-6184
		UDN-6514

Electronic Designs Inc.

Device	Replacement Source	Device
EDH4464	Fujitsu	MB85101A
EDH4864	Fujitsu	MB85103A

EMM

Device	Replacement Source	Device	IC Master Page
◆2114	AMD	AM9114	
	Fairchild	F2114	
	Hitachi	HM472114	
	Intel	2114	
		2114A	
	Intersil	IM2114	
	MicroPwr	MP2114	
	Motorola	MCM2114	
	National	MM2114	
	NEC	μPD2114	
	OKI	**MSM2114**	**4118**
	Panasonic	MN2114	
	SMOS	SRM2114	
	SSS	SCM21C14	
	Synertek	**SY2114**	**4210**
	TI	TMS4045	
	Toshiba	TMM314	
		TMM314A	
◆4044	Intel	2141	
		2141A	
	Intersil	IM7141	
	Mostek	MK4104	
	Motorola	MCM6641	
	National	MM2141	
	NEC	μPD4104	

(Continued)

Device	Replacement Source	Device	IC Master Page
◆4044	TI	TMS4044	
	Zilog	Z6104	

Exar Integrated Systems

Device	Replacement Source	Device	IC Master Page
XR072	Fairchild	μAF772	
	PMI	OP-25	
	TI	TL072	
XR074	Harris	LF347	
	Motorola	MC34004	
	National	LF347	
	TI	TL074	
		TL084C	
	Thomson-CSF		
		TDB0084	
		TDB0084A	
		TDB0347	
XR082	**RCA**	**CA082**	**3596**
	TI	TL082	
	Thomson-CSF		
		TDB0353	
XR083	**RCA**	**CA083**	**3596**
	TI	TL083	
XR084	Fairchild	μAF774	
	RCA	**CA084**	**3596**
	TI	TL084	
XR1200	Cherry	CS1200	
XR1300	Cherry	CS1300	
XR1310	Hitachi	HA1156	
	~~National~~	~~LM1310~~	
	RCA	CA1310	
	Sanyo	LA3301	
		LA3350	
	Sprague	ULN-3810	
	TI	SN76115	
	Toshiba	TA7157	
XR13600	National	LM13600	
	PMI	LM13600	
	Raytheon	LM13600	
XR1400	Cherry	CS1400	
XR14412	**Motorola**	**MC14412**	**3536**
XR1458	AMD	AM1458	
	Exar	XR4558	
	Fairchild	μA1458	
	Harris	HA-2655	
	Hitachi	HA17458	
	MicroPwr	MPOP14	
	Motorola	MC1458	
		MC4558C	
		RC4558	
	National	LM1458	
	NEC	μPC1458	
		μPC4558	
	PMI	PM1458	
	Raytheon	RC1458	
		RC4558	**3592**
	RCA	CA1458	
		LM1458	
		RC4558	
		SSS1458	
	Sanyo	LA6458A	
	Signetics	MC1458	
		NE4558	
	SiliconG	SG1458	
	TI	MC1458	
		RC4558	
XR146	National	LM140	
	Raytheon	LM146	
XR1468	Exar	XR4195	
	Motorola	MC1468	
	Raytheon	RC4195	
	SiliconG	SG1468	
		SG2501A	
		SG3501A	
		SG4501	
XR1488	AMD	MC1488	
	Fairchild	μA1488	
	Hitachi	HD75188	
	Motorola	**MC1488**	**3064**
	National	DS1488	
	Raytheon	RM1488	
	Signetics	MC1488	
	SiliconG	SG1488	
	TI	MC1488	
		SN75188	
XR1489	AMD	MC1489	
	Fairchild	μA1489	
	Hitachi	HD75189	
	Motorola	**MC1489**	**3064**
	National	DS1489	
	Signetics	MC1489	
	SiliconG	SG1489	
XR1489	TI	SN75189	
		SN85189	
XR1489A	Fairchild	μA1489A	
	Motorola	**MC1489A**	**3064**
	National	DS1489A	
	Signetics	MC1489A	
	SiliconG	SG1489A	
	TI	MC1489A	
		SN75189A	
XR1524	**RCA**	**CA1524**	**3602**
	SiliconG	SG1524	
	Sprague	ULS-8124	
	TI	SG1524	
	Unitrode	**UC1524**	**3709**
XR1525A	**Motorola**	**SG1525A**	**3533**
	SiliconG	SG1525A	
	Siliconix	**PWM25A**	**3081**
	Sprague	ULS-8125	
	TI	SG1525A	
	Unitrode	**UC1525A**	**3709**
XR1527A	**Datel**	**AM-464-2M**	**2864**
	Harris	**HA-2640**	**3412**
	Motorola	MC1536	
	National	LM143	
		LM1536	
	SiliconG	SG1536	
XR1543	SiliconG	SG1543	
XR1558	AMD	AM1558	
	Fairchild	μA1558	
	~~Harris~~	~~HA-2650~~	~~3414~~
	Motorola	MC1558	
		MC4558	
		RC1558	
	National	LM1558	
	PMI	**OP-14**	**3566**
		PM1558	
	Raytheon	RC1558	
		RM1558	
		RM4558	
	RCA	CA1558	
		LM1558	
		SSS1558	
	Signetics	MC1558	
	SiliconG	SG1558	
	TI	MC1558	
		RM4558	
XR1568	Motorola	MC1568	
	Raytheon	RM4195	
	SiliconG	SG1501A	
		SG1568	
XR2001	Exar	XR2201	
	Fairchild	9665	
	Motorola	**MC1411**	**3064**
		ULN2001	
		XR2201	
	NEC	μPA2001	
	RIFA	PBD352301	
	Sanyo	LB1231	
	SGS	L201	
	SiliconG	SG2001	
	Sprague	ULN-2001	
		ULN-2021	
		ULQ-2002	
		ULS-2001	
	TI	ULN2001	
	Toshiba	TD62001	
XR2002	Exar	XR2202	
	Fairchild	9666	
		MC1412	
	Motorola	**MC1412**	**3064**
		ULN2002	
	NEC	μPA2002	
	RIFA	PBD352304	
	Sanyo	LB1232	
	SGS	L202	
	Signetics	NE5602	
	Sprague	ULN-2002	
		ULQ-2003	
	TI	ULN2002	
	Toshiba	TD62002	
XR2003	Exar	XR2004	
		XR2203	
	Fairchild	9667	
		MC1413	
	Mitsubishi	M54523	
	Motorola	**MC1413**	**3064**
		ULN2003	
	Sanyo	LB1233	
	SGS	L203	
	Signetics	NE5603	
		ULN2003	
	SiliconG	SG2003	

(Continued)

◆ Discontinued

Bold face device numbers indicate manufacturers data is provided in the IC Master on the pages noted.

© IC MASTER 1984

Exar Integrated Systems (Cont'd)

Manufacturer Device	Replacement Source	Device	IC Master Page
XR2003	Sprague	ULN-2003	
		ULQ-2003	
		ULQ-2004	
		ULS-2003	
		ULS-2004	
	TI	ULN2003	
	Toshiba	TD62003	
XR2004	Exar	XR2003	
		XR2203	
	Fairchild	9667	
		MC1413	
	Mitsubishi	M54523	
	Motorola	**MC1413**	**3064**
		ULN2003	
	Sanyo	LB1233	
	SGS	L203	
	Signetics	NE5603	
		ULN2003	
	SiliconG	SG2003	
	Sprague	ULN-2003	
		ULQ-2003	
		ULQ-2004	
		ULS-2003	
		ULS-2004	
	TI	ULN2003	
	Toshiba	TD62003	
XR2011	SiliconG	SG3851	
	Sprague	ULN-2011	
XR2012	SiliconG	SG3852	
	Sprague	ULN-2012	
		ULS-2012	
XR2013	Sprague	ULN-2013	
XR2014	SiliconG	SG3853	
	Sprague	ULN-2014	
		ULS-2013	
XR2201	Exar	XR2001	
	Fairchild	9665	
	Motorola	**MC1411**	**3064**
		ULN2001	
		XR2201	
	NEC	μPA2001	
	RIFA	PBD352301	
	Sanyo	LB1231	
	SGS	L201	
	SiliconG	SG2001	
	Sprague	ULN-2001	
		ULN-2021	
		ULQ-2002	
		ULS-2001	
	TI	ULN2001	
	Toshiba	TD62001	
XR2202	Exar	XR2002	
	Fairchild	9666	
		MC1412	
	Motorola	**MC1412**	**3064**
		ULN2002	
	NEC	μPA2002	
	RIFA	PBD352304	
	Sanyo	LB1232	
	SGS	L202	
	Signetics	NE5602	
	Sprague	ULN-2002	
		ULQ-2003	
	TI	ULN2002	
	Toshiba	TD62002	
XR2203	Exar	XR2003	
		XR2004	
	Fairchild	9667	
		MC1413	
	Mitsubishi	M54523	
	Motorola	**MC1413**	**3064**
		ULN2003	
	Sanyo	LB1233	
	SGS	L203	
	Signetics	NE5603	
		ULN2003	
	SiliconG	SG2003	
	Sprague	ULN-2003	
		ULQ-2003	
		ULQ-2004	
		ULS-2003	
		ULS-2004	
	TI	ULN2003	
	Toshiba	TD62003	
XR2204	Fairchild	9668	
	Mitsubishi	M54526	
	Motorola	**MC1416**	**3064**
		ULN2004	
	Sanyo	LB1234	

(Continued)

Manufacturer Device	Replacement Source	Device	IC Master Page
XR2204	SGS	L204	
	Signetics	NE5604	
		ULN2004	
	SiliconG	SG2004	
	Sprague	ULN-2004	
		ULS2004	
	TI	ULN2004	
	Toshiba	TD62004	
XR2205	Sprague	ULN-2005	
	TI	ULN2005	
XR2207	Raytheon	XR2207	
XR2211	Raytheon	XR2211	
XR2240	Fairchild	μA2240	
	Intersil	ICL8240	
	TI	μA2240	
XR246	National	LM246	
	Raytheon	LM246	
	Thomson-CSF		
		TDE0146	
XR2524	**RCA**	**CA2524**	**3602**
	SiliconG	SG2524	
	Sprague	ULQ-8124	
	TI	SG2524	
XR2525A	**Motorola**	**SG2525A**	**3533**
	SiliconG	SG2525A	
	Siliconix	PWM25B	
	Siltronics	PWM25B	
	Sprague	ULQ-8125	
XR2527A	**Motorola**	**SG2527A**	**3533**
	SiliconG	SG2527A	
	Siliconix	PWM27B	
	Siltronics	PWM27B	
	Sprague	ULQ-8127	
	Unitrode	UC2527	
XR2543	SiliconG	SG2543	
XR2567	Exar	XR567	
	MCE	MCE-567	
	National	LM567	
	Signetics	NE567	
		SE567	
XR300	MCE	MCE-D15A	
XR3403	AMD	LM324	
	Exar	XR3403C	
	Fairchild	μA324	
		μA3403	
	Motorola	LM324	
		MC3403	
	National	LM324	
	NEC	μPC324	
	Raytheon	LM324	
		RC3403	
		RC4137	
	RCA	CA324	
		LM324	
	Sanyo	LA6324	
	Signetics	LM324	
		MC3403	
	SiliconG	SG324	
	TI	LM324	
		MC3403	
	Thomson-CSF		
		TDB0124	
XR3403C	AMD	LM324	
	Exar	**XR3403**	**3378**
	Fairchild	μA324	
		μA3403	
	Motorola	LM324	
		MC3403	
	National	LM324	
	NEC	μPC324	
	Raytheon	LM324	
		RC3403	
		RC4137	
	RCA	CA324	
		LM324	
	Sanyo	LA6324	
	Signetics	LM324	
		MC3403	
	SiliconG	SG324	
	TI	LM324	
		MC3403	
	Thomson-CSF		
		TDB0124	
XR3403M	Raytheon	RM3403	
XR346	National	LM346	
	Raytheon	LM346	
	Thomson-CSF		
		TDB0146	
XR3470	**Motorola**	**MC3470**	**3061**
XR3503	Motorola	MC3503	
	Raytheon	RC3503	
		RM3503	

(Continued)

Manufacturer Device	Replacement Source	Device	IC Master Page
XR3503	Raytheon	RM4137	
	Signetics	MC3503	
	SiliconG	SG3503	
	TI	MC3503	
XR3524	**RCA**	**CA3524**	**3602**
	Signetics	**SG3524**	**3661**
	SiliconG	SG3524	
	Sprague	ULN-8124	
	TI	SG3524	
	Unitrode	UC3524	
XR3525A	**Motorola**	**SG3525A**	**3533**
	SiliconG	SG3525A	
	Siliconix	**PWM25C**	**3081**
	TI	SG3525A	
XR3527A	**Motorola**	**SG3527A**	**3533**
	SiliconG	SG3527A	
	Siliconix	**PWM27C**	**3081**
	TI	SG3527A	
XR3543	SiliconG	SG3543	
XR400	MCE	MCE-AD15C	
XR4136	Fairchild	μA4136	
	MicroPwr	MP5509	
	PMI	OP-09	
		PM4136	
	Raytheon	RC4136	
	SiliconG	SG4136C	
	TI	RC4136	
XR4136M	Raytheon	RM4136	
	SiliconG	SG4136	
	TI	RM4136	
XR4151	Raytheon	RC4151	
		RM4151	
		RV4151	
	TI	XR4151	
XR4194	MCE	MCE-4194	
	Raytheon	RC4194	
		RM4194	
	SiliconG	SG4194	
XR4195	Exar	XR1468	
	Motorola	MC1468	
	Raytheon	RC4195	
	SiliconG	SG1468	
		SG2501A	
		SG3501A	
		SG4501	
XR4202	Plessey	TAB1042	
XR4212	AMD	LM348	
	Fairchild	μA348	
	Harris	HA-4741	
	MicroPwr	MP5511	
	Motorola	MC4741	
	National	LM348	
	NEC	μPC4741	
	PMI	OP-11	
	Raytheon	HA4741	
		LM348	
		RC4156	
	TI	LM348	
	Thomson-CSF		
		TDB0111	
		TDB0148	
XR4558	AMD	AM1458	
	Exar	XR1458	
	Fairchild	μA1458	
	Harris	HA-2655	
	Hitachi	HA17458	
	MicroPwr	MPOP14	
	Motorola	MC1458	
		MC4558C	
		RC4558	
	National	LM1458	
	NEC	μPC1458	
		μPC4558	
	PMI	PM1458	
	Raytheon	RC1458	
		RC4558	**3592**
	RCA	CA1458	
		LM1458	
		RC4558	
		SSS1458	
	Sanyo	LA6458A	
	Signetics	MC1458	
		NE4558	
	SiliconG	SG1458	
	TI	MC1458	
		RC4558	
XR4739	Fairchild	μA739	
		μA749	
	National	LM1303	
	Raytheon	**RC4739**	**3592**
	SGS	TBA231	

(Continued)

Manufacturer Device	Replacement Source	Device	IC Master Page
XR4739	TI	SN76131	
		SN76149	
XR494	Fairchild	μA494	
	Motorola	TL494	
	Sprague	ULS8194	
	TI	TL494	
	Unitrode	**UC494A**	**3709**
XR495	Motorola	TL495	
	TI	TL495	
	Unitrode	**UC495A**	**3709**
XR500	MCE	MCE-D15B	
XR5532	**Signetics**	**NE5532**	**3644**
		NE5532A	**3644,3644**
		SE5532	**526,3644**
		SE5532A	**526,3644,3644**
	TI	NE5532	
		NE5532A	
XR5533	**Signetics**	**NE5533**	**3646**
		NE5533A	**3646**
	TI	NE5533	
XR5534	**Datel**	**AM-453-2C**	**2864**
	Raytheon	**RC5534**	**3592**
	Signetics	NE5534	
		NE5534A	**3646**
	TI	NE5534	
		NE5534A	
XR555	Cherry	CS555	
	Fairchild	μA555	
	Hitachi	HA17555	
	Motorola	MC1455	
	National	LM555	
	NEC	μPC1555	
	Raytheon	RC555	
	RCA	CA355	
		CA555	**3604**
	Sanyo	LB8555	
	Signetics	NE555	
	SiliconG	SG555	
	TI	NE555	
XR555M	Motorola	MC1555	
	Raytheon	RM555	
	Signetics	**SE555**	**526**
	TI	**SE555**	
XR556	AMD	LM556	
	Exar	XR556M	
	Fairchild	μA556	
	Motorola	MC3456	
		MC3556	
	National	LM556	
	Raytheon	RC556	
		RM556	
	Signetics	NE556	
		SE556	**526**
	SiliconG	SG556	
	TI	NE556	
		SE556	
XR556M	AMD	LM556	
	Exar	XR556	
	Fairchild	μA556	
	Motorola	MC3456	
		MC3556	
	National	LM556	
	Raytheon	RC556	
		RM556	
	Signetics	NE556	
		SE556	**526**
	SiliconG	SG556	
	TI	NE556	
		SE556	
XR558	**Signetics**	**NE558**	**3670**
		SE558	**3670**
XR567	**Exar**	**XR2567**	**3367**
	MCE	MCE-567	
	National	LM567	
	Signetics	NE567	
		SE567	
XR6118	Sanyo	LB1290	
	SiliconG	SG6118	
	Sprague	UDN-6118	
XR6128	Sprague	UDN-6128	
XR800	MCE	MCE-D15D	
XR8038	Intersil	ICL8038	
XRA100	**Interdesign**	**MOA**	**4746**
		MOM	**4746**
	MCE	MCE-A20	
		MCE-A20A	
XRB100	**Interdesign**	**MOB**	**4746**
	MCE	MCE-A20B	
XRC100A	**Interdesign**	**MOC**	**4746**
	MCE	MCE-A20C	

◆ Discontinued

The manufacturers report their devices can be used as direct replacements.
Performance details often differ, so compare the specifications considering your requirements.

Exar Integrated Systems (Cont'd)

Manufacturer Device	Replacement Source	Device	IC Master Page
XRCMA	**Interdesign**	**MCA**	**4746**
	MasterLogic	ML100	
	MCE	MGC110A	
	Monosil	ML100	
	Nitron	NC5100	
XRCMB	**Interdesign**	**MCB**	**4746**
	MasterLogic	ML150	
	MCE	MGC160B	
	Monosil	ML150	
	Nitron	NC5150	
XRCMD	**Interdesign**	**MCD**	**4746**
	MasterLogic	ML350	
	MCE	MGC350D	
	Monosil	ML350	
	Nitron	NC5350	
XRD100	**Interdesign**	**MOD**	**4746**
	MCE	MCE-A40D	
XRE100	Cherry	CS2000	
	Interdesign	**MOE**	**4746**
	MCE	MCE-A20E	
XRF100	Cherry	CS3000	
	Interdesign	**MCF**	**4746**
		MOF	**4746**
	MCE	MCE-A20F	
XRG100	Cherry	CS2500	
	Interdesign	**MOG**	**4746**
	MCE	MCE-A20G	
XRJ100	**Interdesign**	**MOJ**	**4746**
	MCE	MCE-A20J	
XRL555	Intersil	ICL7555	
XRL556	Intersil	ICL7556	
XRMC	**Interdesign**	**MCC**	**4746**
	MasterLogic	ML200	
	MCE	MGC210C	
	Monosil	ML200	
	Nitron	NC5200	

EXEL Microelectronics

Manufacturer Device	Replacement Source	Device	IC Master Page
XLS23256	Synertek	SY23256	
XLS23257	**Synertek**	**SY23256A**	**4211**
XLS2366	**Synertek**	**SY2365A**	**4211**
XLS2864A	Xicor	X2864A	

Fairchild

Manufacturer Device	Replacement Source	Device	IC Master Page
100415	AMD	AM100415	
	Signetics	100415	
11C01	Motorola	MC1688	
11C05	Motorola	MC1699	
	Plessey	SP8610	
		SP8616	
11C06	Motorola	MC1690	
11C24	Motorola	MC4024	
		MC4324	
11C44	Motorola	MC4044	
		MC4344	
11C58	Motorola	MC1658	
	Plessey	SP1658	
11C70	Motorola	MC1670	
	Plessey	SP1670	
11C90	Plessey	SP8680	
		SP8685	
11C91	Plessey	SP8740	
2102H	National	MM2102A	
	Panasonic	MN2102	
	SGS	M2102A	
29704	AMD	AM29704	
29705	AMD	AM29705	
	Fairchild	29F705	
	National	IDM29705	
29F01	**AMD**	**AM2901B**	**1401**
	Fairchild	F2901A	
	National	IDM2901A	
29F10	AMD	AM2910	
	Fairchild	F2910	
	Motorola	MC2910	
29F705	AMD	AM29705	
	Fairchild	29705	
	National	IDM29705	
3341	AMD	AM3341	
	MMI	67401	
	National	87S401	
3341A	AMD	AM2841	
3347	AMI	S2182	
		S2183	
		S2185	
	SMC	SR5015	
34XXX	Fairchild	F4XXX	
	Hitachi	HD14XXX	
	Motorola	MC14XXX	
	National	CD4XXX	
	OKI	MSM4XXX	
	RCA	CD4XXX	
	SGS	HCF4XXX	
	SSS	SCL4XXX	
	Solitron	CM4XXX	
	TI	TP4000 series	
	Toshiba	TC4XXX	
3516	AMD	AM9218	
	Fairchild	68316	
		F3516	
		F35316	
		F68316	**1464**
	GI	RO3-9316	
	GTEMicro	2316	
	Intel	2316	
	Mostek	MK34000	
	Motorola	MCM68316	
		MCM68A316	
		MM2316	
	National	MM52116	
		MM5258	
	NCR	2316	
		NCR2316	
	NEC	μPD2316	
	OKI	**MSM2916**	**4118**
	Rockwell	R2316	
	SGS	M2316	
	TI	SBP8316	
	Toshiba	TMM331A	
		TMM334	
3730	AMI	S1602	
	Fairchild	**F6850**	**1463**
	Fujitsu	MB8868A	
	GI	AY3-1015	
	Hitachi	HD6850	
		HD68A50	
	Motorola	**MC6850**	**1505**
	National	MM5303	
	RCA	**CDP6402**	**1595**
	SMC	COM2017	
		COM2502H	
		COM8017	
	Thomson-CSF		
		EF6850	
	Western	TR1402	
		TR1602	
		TR1863	
3850	Mostek	MK3850	
3851	Mostek	MK3851	
3852	Mostek	MK3852	
3853	Mostek	MK3853	
3854	Mostek	MK3854	
3861	Mostek	MK3861	
3870	Mostek	MK3870	
	SGS	M3870	
	SMC	MPU3870	
	Telefunken	U3870	
3871	**AD**	**AD741**	**3351**
	Fairchild	μA741	
	Hitachi	HA17741	
	Intersil	AD741	
		ICL741	
	MicroPwr	MP5501	
		MP5502	**3529**
		OP-02	**3529**
	Mostek	MK3871	
	Motorola	LM741	
		MC1741	
	National	LM741	
	NEC	μPC151	
		μPC741	
	PMI	OP-01	
		OP-02	**3566**
		PM741	
		SSS741	
	Raytheon	RC741	
		RM741	
	RCA	CA3056	
		CA741	
	Signetics	μA741	
	SiliconG	SG300	
		SG741	
	TI	μA741	
	Thomson-CSF		
		SFC2741	
	Toshiba	TA7504	
4736B	AMI	S6508	
	Harris	**HM6508**	**3965**
			(Continued)
4736B	Intel	2125A	
	Motorola	MCM2125	
	National	MM74C929	
		NMC6508	
	NEC	μPD443	
	SSS	SCM21C02	
	Toshiba	TC5508	
5116	Mostek	MK5116	
	National	TP5116	
	SGS	M5116	
5116-1	Mostek	MK5117	
5151	Mostek	MK5151	
5156	Mostek	MK5156	
	National	TP5156	
	SGS	M5156	
5400	National	DM5400	
	Signetics	**5400**	**528,860**
	TI	**SN5400**	**920**
5401	National	DM5401	
	TI	**SN5401**	**920**
5402	National	DM5402	
	TI	**SN5402**	**920**
5403	National	DM5403	
	TI	**SN5403**	**921**
5404	Fairchild	9016	
	National	DM5404	
		DM9016C	
	TI	**SN5404**	**921**
5405	National	DM5405	
	TI	**SN5405**	**921**
5406	National	DM5406	
	TI	**SN5406**	**922**
5407	National	DM5407	
	TI	**SN5407**	**922**
5408	National	DM5408	
	TI	**SN5408**	**922**
5409	National	DM5409	
	TI	**SN5409**	**923**
5410	National	DM5410	
	TI	**SN5410**	**923**
54107	Motorola	MC54107	
	National	DM54107	
	TI	**SN54107**	**957**
5411	National	DM5411	
	Signetics	**5411**	**860**
	TI	SN5411	
5412	**TI**	**SN5412**	**924**
54121	Fairchild	9603	
	National	DM54121	
	Signetics	**54121**	**528,860**
	TI	**SN54121**	**961**
54122	**TI**	**SN54122**	**961**
54123	National	DM54123	
	Signetics	**54123**	**528,861**
	TI	**SN54123**	**962**
54125	National	DM54125	
		DM7093	
	TI	**SN54125**	**963**
		SN54425	**1034**
54126	National	DM54126	
		DM7094	
	Signetics	**54126**	**528,861**
	TI	**SN54126**	**963**
		SN54426	**1034**
5413	National	DM5413	
	TI	**SN5413**	**924**
54132	National	DM54132	
	Signetics	**54132**	**861**
	TI	**SN54132**	**965**
54136	**TI**	**SN54136**	**966**
5414	National	DM5414	
	Signetics	**5414**	**860**
	TI	**SN5414**	**924**
54145	National	DM54145	
	TI	**SN54145**	**970**
54150	National	DM54150	
	TI	**SN54150**	**971**
54151A	National	DM54151	
	Signetics	**54151**	**528,861**
	TI	SN54151	
		SN54151A	**972**
54152A	**TI**	**SN54152A**	**972**
54153	National	DM54153	
	Signetics	**54153**	**528,861**
	TI	**SN54153**	**972**
54155	National	DM54155	
	TI	**SN54155**	**974**
54156	National	DM54156	
	TI	**SN54156**	**974**
54157	National	DM54157	
	Signetics	**54157**	**528,861**
	TI	**SN54157**	**975**
54159	**TI**	**SN54159**	**976**
5416	National	DM5416	
	TI	**SN5416**	**925**
54160	Fairchild	9310	
	National	DM54160	
	Raytheon	RM9310	
	Signetics	**54160**	**861**
	TI	**SN54160**	**977**
54161	National	DM54161	
	Signetics	**54161**	**528,861**
	TI	**SN54161**	**977**
54162	National	DM54162	
	TI	**SN54162**	**978**
54163	National	DM54163	
	Signetics	**54163**	**528,861**
	TI	**SN54163**	**978**
54164	National	DM54164	
		DM7570	
	Signetics	**54164**	**528,861**
	TI	**SN54164**	**979**
54165	National	DM54165	
		DM7590	
	Signetics	**54165**	**861**
	TI	**SN54165**	**979**
54166	National	DM54166	
	Signetics	**54166**	**861**
	TI	**SN54166**	**979**
54167	**TI**	**SN54167**	**980**
5417	National	DM5417	
	TI	**SN5417**	**925**
54170	National	DM54170	
	TI	**SN54170**	**981**
54173	National	DM54173	
		DM7551	
	Raytheon	RM8T10	
	TI	**SN54173**	**982**
54174	National	DM54174	
	Signetics	**54174**	**528,861**
	TI	**SN54174**	**983**
54175	National	DM54175	
	Signetics	**54175**	**528,861**
	TI	**SN54175**	**983**
54176	National	DM54176	
	Raytheon	RM8280	
	Signetics	54176	
		S8280	
	TI	**SN54176**	**984**
54177	National	DM54177	
		DM7281	
	Raytheon	RM8281	
	Signetics	54177	
		S7281	
		S8281	
	TI	**SN54177**	**984**
54178	Raytheon	RM8270	
	Signetics	S8270	
	TI	**SN54178**	**984**
54179	Raytheon	RM8271	
	Signetics	S8271	
	TI	**SN54179**	**985**
54180	National	DM54180	
	Signetics	**54180**	**528,861**
	TI	**SN54180**	**985**
54181	National	DM54181	
	Raytheon	RM9341	
	Signetics	**54181**	**861**
	TI	**SN54181**	**985**
54182	National	DM54182	
	Raytheon	RM9342	
	TI	**SN54182**	**986**
54190	National	DM54190	
	Signetics	**54190**	**861**
	TI	**SN54190**	**989**
54191	National	DM54191	
	Signetics	**54191**	**861**
	TI	**SN54191**	**989**
54192	National	DM54192	
		DM7560	
	TI	**SN54192**	**990**
54193	National	DM54193	
		DM7563	
	TI	**SN54193**	**990**
54195	Fairchild	9300	
	National	DM54195	
	TI	**SN54195**	**991**
54196	National	DM54196	
	Signetics	54196	
	TI	**SN54196**	**991**
54198	National	DM54198	
	TI	**SN54198**	**992**
54199	National	DM54199	
	TI	**SN54199**	**993**

♠ Discontinued

Bold face device numbers indicate manufacturers data is provided in the IC Master on the pages noted.

© IC MASTER 1984

Fairchild (Cont'd)

Manufacturer Device	Replacement Source	Device	IC Master Page
5420	National	DM5420	
	Signetics	**5420**	**528,860**
	TI	**SN5420**	**926**
5422	**TI**	**SN5422**	**927**
5423	National	DM5423	
	TI	**SN5423**	**927**
5425	National	DM5425	
	TI	SN5425	
5427	National	DM5427	
	TI	**SN5427**	**929**
54279	**Signetics**	**54279**	**862**
	TI	**SN54279**	**1009**
54283	TI	SN54283	
54293	**TI**	**SN54293**	**1014**
54298	**TI**	**SN54298**	**1015**
5430	National	DM5430	
	TI	**SN5430**	**929**
5432	National	DM5432	
	Signetics	**5432**	**528,860**
	TI	**SN5432**	**930**
5437	National	DM5437	
	TI	**SN5437**	**932**
5438	National	DM5438	
	TI	**SN5438**	**932**
5440	National	DM5440	
	TI	**SN5440**	**933**
5442A	National	DM5442	
	Signetics	**5442**	**860**
	TI	SN5442	
5443A	Signetics	5443	
	TI	SN5443	
5444A	TI	SN5444	
		SN5444A	**934**
5445	National	DM5445	
	TI	**SN5445**	**934**
		SN5445A	
5446A	Fairchild	9317B	
		9317C	
	National	DM5446	
	Signetics	5446	
	TI	SN5446	
		SN5446A	**935**
~~5447A~~	~~National~~	~~DM5447~~	
	Signetics	5447	
	TI	SN5447	
		SN5447A	**935**
5448	National	DM5448	
	TI	**SN5448**	**935**
		SN5448A	
5449	**TI**	**SN5449**	**935**
5450	National	DM5450	
	TI	**SN5450**	**936**
5451	National	DM5451	
	TI	SN5451	
5453	National	DM5453	
	TI	**SN5453**	**937**
5454	National	DM5454	
	TI	**SN5454**	**938**
5460	National	DM5460	
	TI	**SN5460**	**940**
5470	National	DM5470	
	TI	**SN5470**	**943**
5472	National	DM5472	
	TI	**SN5472**	**944**
5473	National	DM5473	
	Signetics	**5473**	**528,860**
	TI	**SN5473**	**944**
5474	National	DM5474	
	Signetics	**5474**	**528,860**
	TI	SN5474	
5475	National	DM5475	
	Signetics	**5475**	**860**
	TI	**SN5475**	**946**
5476	National	DM5476	
	Signetics	**5476**	**528,860**
	TI	**SN5476**	**946**
5477	Signetics	5477	
	TI	**SN5477**	**947**
5480	**TI**	**SN5480**	**948**
5482	**TI**	**SN5482**	**948**
5483A	Signetics	5483A	
	TI	**SN5483A**	**949**
5485	National	DM5485	
	Signetics	**5485**	**528,860**
	TI	**SN5485**	**950**
5486	National	DM5486	
	Signetics	**5486**	**860**
	TI	**SN5486**	**950**
5488	National	DM5488	
	Signetics	S8224	

(Continued)

Manufacturer Device	Replacement Source	Device	IC Master Page
5488	TI	SN5488	
		SN5488A	
5490	National	DM5490	
	TI	SN5490	
		SN5490A	**952**
5491A	National	DM5491	
	Signetics	**5491**	**860**
	TI	SN5491	
		SN5491A	**952**
5492	National	DM5492	
	TI	SN5492	
		SN5492A	**952**
5493A	National	DM5493	
	Signetics	**5493**	**528,860**
	TI	SN5493	
		SN5493A	**953**
5494	**TI**	**SN5494**	**953**
		SN5494A	
5496	National	DM5496	
	Signetics	**5496**	**528,860**
	TI	**SN5496**	**954**
5497	**TI**	**SN5497**	**954**
54F00	**Motorola**	**MC54F00**	**822**
	Signetics	54F00	
54F02	**Motorola**	**MC54F02**	**822**
	Signetics	54F02	
54F04	**Motorola**	**MC54F04**	**822**
	Signetics	54F04	
54F08	**Motorola**	**MC54F08**	**822**
	Signetics	54F08	
54F10	**Motorola**	**MC54F10**	**822**
	Signetics	54F10	
54F109	**Motorola**	**MC54F109**	**822**
	Signetics	54F109	
54F11	**Motorola**	**MC54F11**	**822**
	Signetics	54F11	
54F138	**Motorola**	**MC54F138**	**822**
	Signetics	54F138	
54F139	**Motorola**	**MC54F139**	**822**
	Signetics	54F139	
54F20	**Motorola**	**MC54F20**	**822**
	Signetics	54F20	
54F240	**Motorola**	**MC54F240**	**822**
	Signetics	**54F240**	**881**
54F241	**Motorola**	**MC54F241**	**822**
	Signetics	**54F241**	**881**
54F242	**Motorola**	**MC54F242**	**822**
	Signetics	54F242	
54F243	**Motorola**	**MC54F243**	**822**
	Signetics	54F243	
54F244	**Motorola**	**MC54F244**	**822**
	Signetics	**54F244**	**882**
54F32	**Motorola**	**MC54F32**	**822**
	Signetics	54F32	
54F333	Motorola	MC54F333	
	Signetics	54F333	
54F373	**Motorola**	**MC54F373**	**822**
	Signetics	**54F373**	**886**
54F374	**Motorola**	**MC54F374**	**822**
	Signetics	**54F374**	**886**
54F534	**Motorola**	**MC54F534**	**822**
	Signetics	54F534	
54F74	**Motorola**	**MC54F74**	**822**
	Signetics	54F74	
54H00	National	DM54H00	
	TI	**SN54H00**	**920**
54H01	National	DM54H01	
	TI	**SN54H01**	**920**
54H04	National	DM54H04	
	TI	**SN54H04**	**921**
54H05	National	DM54H05	
	TI	SN54H05	
54H08	National	DM54H08	
54H10	National	DM54H10	
	TI	**SN54H10**	**923**
54H101	**TI**	**SN54H101**	**956**
54H102	**TI**	**SN54H102**	**956**
54H103	National	DM54H103	
	TI	**SN54H103**	**956**
54H106	National	DM54H106	
	TI	**SN54H106**	**957**
54H108	National	DM54H108	
	TI	**SN54H108**	**958**
54H11	Motorola	MC3106	
	National	DM54H11	
	TI	**SN54H11**	**923**
54H183	Fairchild	934183	
	TI	**SN54H183**	**986**
54H20	National	DM54H20	
	TI	**SN54H20**	**926**
54H21	National	DM54H21	
	TI	**SN54H21**	**927**

Manufacturer Device	Replacement Source	Device	IC Master Page
54H22	National	DM54H22	
	TI	**SN54H22**	**927**
54H30	National	DM54H30	
	TI	**SN54H30**	**929**
54H40	National	DM54H40	
	TI	**SN54H40**	**933**
54H50	National	DM54H50	
	TI	**SN54H50**	**936**
54H51	National	DM54H51	
	TI	**SN54H51**	**936**
54H52	National	DM54H52	
	TI	**SN54H52**	**937**
54H53	National	DM54H53	
	TI	**SN54H53**	**937**
54H54	National	DM54H54	
	TI	**SN54H54**	**938**
54H55	National	DM54H55	
	~~TI~~	~~SN54H55~~	~~939~~
54H60	National	DM54H60	
	TI	**SN54H60**	**940**
54H61	National	DM54H61	
	TI	**SN54H61**	**940**
54H62	National	DM54H62	
	TI	**SN54H62**	**941**
54H71	National	DM54H71	
	TI	**SN54H71**	**943**
54H72	National	DM54H72	
	TI	**SN54H72**	**944**
54H74	National	DM54H74	
	TI	**SN54H74**	**945**
54H76	National	DM54H76	
	TI	**SN54H76**	**946**
54H78	National	DM54H78	
	TI	**SN54H78**	**947**
54H87	**TI**	**SN54H87**	**951**
54LS00	**Motorola**	**SN54LS00**	**822**
	National	DM54LS00	
	Signetics	**54LS00**	**529**
	TI	**SN54LS00**	**920**
54LS01	**Motorola**	**SN54LS01**	**822**
	National	DM54LS01	
	TI	**SN54LS01**	**920**
54LS02	**Motorola**	**SN54LS02**	**822**
	National	DM54LS02	
	Signetics	**54LS02**	**529**
	TI	**SN54LS02**	**920**
54LS03	**Motorola**	**SN54LS03**	**822**
	National	DM54LS03	
	TI	**SN54LS03**	**921**
54LS04	**Motorola**	**SN54LS04**	**822**
	National	DM54LS04	
	Signetics	**54LS04**	**529**
	TI	**SN54LS04**	**921**
54LS05	**Motorola**	**SN54LS05**	**822**
	National	DM54LS05	
	TI	**SN54LS05**	**921**
54LS08	**Motorola**	**SN54LS08**	**822**
	National	DM54LS08	
	Signetics	**54LS08**	**529**
	TI	**SN54LS08**	**922**
54LS09	**Motorola**	**SN54LS09**	**822**
	National	DM54LS09	
	TI	**SN54LS09**	**923**
54LS10	**Motorola**	**SN54LS10**	**822**
	National	DM54LS10	
	Signetics	**54LS10**	**529**
	TI	**SN54LS10**	**923**
54LS109	Motorola	SN54LS109A	
	National	DM54LS109	
		DM54LS109A	
	Signetics	54LS109	
	TI	SN54LS109	
		SN54LS109A	**958**
54LS11	**Motorola**	**SN54LS11**	**822**
	National	DM54LS11	
	TI	**SN54LS11**	**923**
54LS112	Motorola	SN54LS112A	
	National	DM54LS112	
	Signetics	54LS112	
	TI	SN54LS112	
		SN54LS112A	**959**
54LS113	Motorola	SN54LS113A	
	National	DM54LS113	
	Signetics	54LS113	
	TI	SN54LS113	
		SN54LS113A	
54LS114	Motorola	SN54LS114A	
	National	DM54LS114	
		DM54LS114A	
	TI	SN54LS114	
		SN54LS114A	**960**

Manufacturer Device	Replacement Source	Device	IC Master Page
54LS126	Motorola	SN54LS126A	
	National	DM54LS126	
	Signetics	54LS126A	
	TI	SN54LS126	
		SN54LS126A	**962**
54LS13	Motorola	SN54LS13	
	National	DM54LS13	
	TI	**SN54LS13**	**924**
		SN54S13	
54LS133	Motorola	SN54LS133	
54LS136	Motorola	SN54LS136	
	National	DM54LS136	
	Signetics	54LS136	
	TI	**SN54LS136**	**966**
54LS138	Motorola	SN54LS138	
	National	DM54LS138	
	Signetics	**54LS138**	**529**
	~~TI~~	~~SN54LS136~~	~~966~~
54LS139	Motorola	SN54LS139	
	National	DM54LS139	
	Signetics	**54LS139**	**529**
	TI	**SN54LS139**	**968**
54LS14	Motorola	SN54LS14	
	National	DM54LS14	
	Signetics	**54LS14**	**529**
	TI	**SN54LS14**	**924**
54LS145	Motorola	SN54LS145	
	TI	**SN54LS145**	**970**
54LS15	Motorola	SN54LS15	
	National	DM54LS15	
	TI	**SN54LS15**	**925**
54LS151	Motorola	SN54LS151	
	National	DM54LS151	
	Signetics	54LS151	
	TI	**SN54LS151**	**972**
54LS152	TI	SN54LS152	
54LS153	Motorola	SN54LS153	
	National	DM54LS153	
	Signetics	**54LS153**	**529**
	TI	**SN54LS153**	**972**
54LS155	Motorola	SN54LS155	
	National	DM54LS155	
	TI	**SN54LS155**	**974**
54LS156	Motorola	SN54LS156	
	National	DM54LS156	
	TI	**SN54LS156**	**974**
54LS157	Motorola	SN54LS157	
	National	DM54LS157	
	Signetics	**54LS157**	**529**
	TI	**SN54LS157**	**975**
54LS158	Motorola	SN54LS158	
	National	DM54LS158	
	Signetics	54LS158	
	TI	**SN54LS158**	**975**
54LS161A	Motorola	SN54LS161A	
	National	DM54LS161A	
	Signetics	**54LS161A**	**529**
	TI	**SN54LS161A**	**977**
54LS164	Motorola	SN54LS164	
	National	DM54LS164	
	Signetics	**54LS164**	**529**
	TI	**SN54LS164**	**979**
54LS165	Motorola	SN54LS165	
	TI	**SN54LS165**	**979**
54LS168	Motorola	SN54LS168	
	National	DM54LS168	
	TI	SN54LS168	
54LS169	Motorola	SN54LS169	
	National	DM54LS169	
	TI	SN54LS169	
54LS170	Motorola	SN54LS170	
	National	DM54LS170	
	TI	**SN54LS170**	**981**
54LS173	Motorola	SN54LS173A	
	National	DM54LS173	
	Signetics	54LS173	
	TI	**SN54LS173A**	**982**
54LS174	Motorola	SN54LS174	
	National	DM54LS174	
	Signetics	**54LS174**	**529**
	TI	**SN54LS174**	**983**
54LS175	Motorola	SN54LS175	
	National	DM54LS175	
	Signetics	**54LS175**	**529**
	TI	**SN54LS175**	**983**
54LS181	Motorola	SN54LS181	
	Signetics	54LS181	
	TI	**SN54LS181**	**985**
54LS189	National	DM54LS189	
	TI	SN54LS189	
		SN54LS189A	**988**

◆ Discontinued

The manufacturers report their devices can be used as direct replacements.
Performance details often differ, so compare the specifications considering your requirements.

Integrated Circuits Magazine
The magazine for the engineering design strategist*

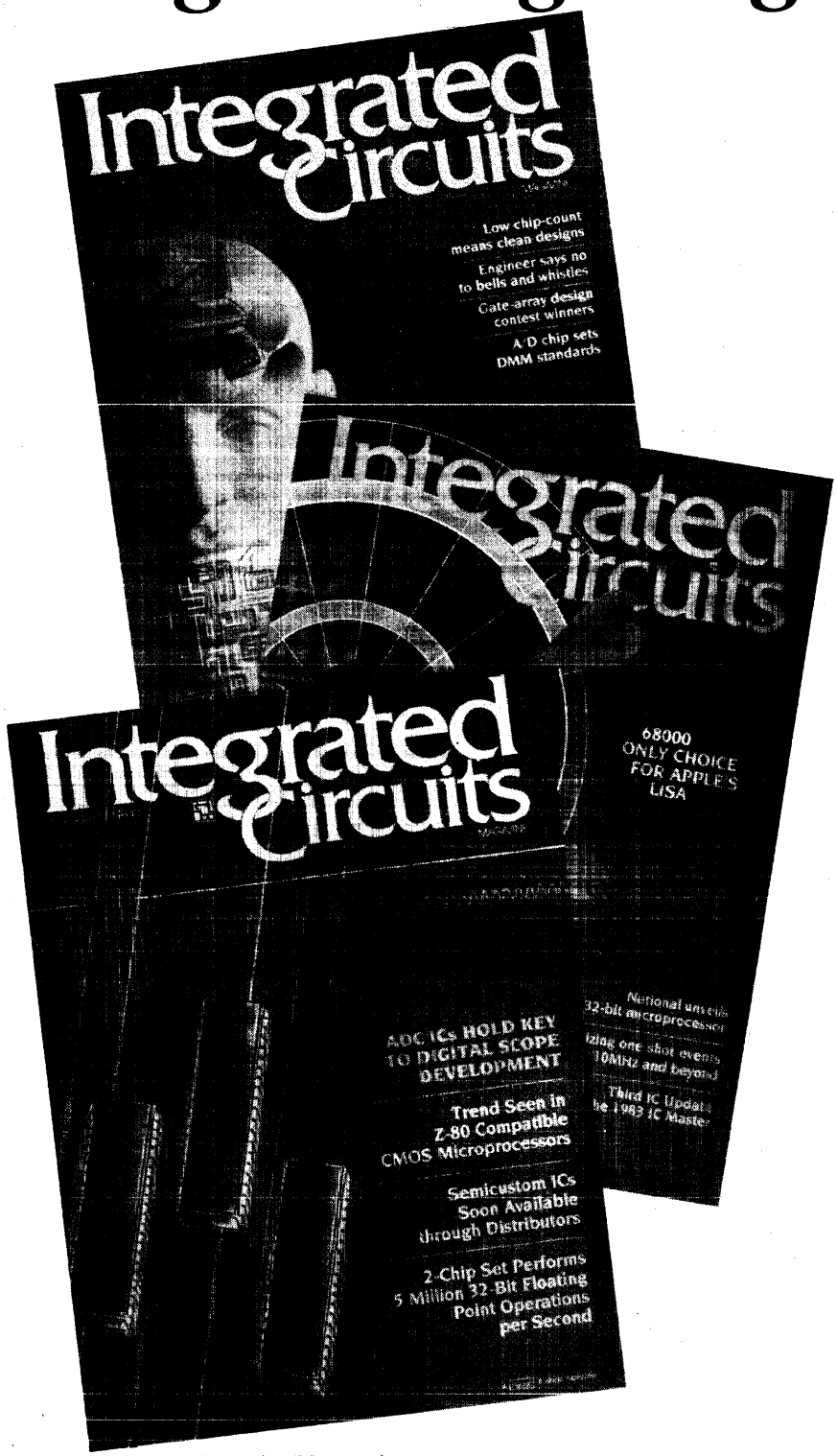

Integrated Circuits Magazine is the only publication written for senior design engineers and engineering managers who specialize in the specifying and use of ICs and related components in the design of instruments, equipment and systems.

It is unique in that it concentrates on reporting *from the viewpoint of the user.*

Each issue of *Integrated Circuits Magazine* includes staff-written interviews with leading designers at major IC customers, as well as articles written by IC users themselves.

Regular features include: IC User Feedback Reports, Semicustom Design Techniques, IC Design Problems and Solutions. What's New in ICs, and much more.

To receive *Integrated Circuits Magazine* absolutely FREE† simply give us your authorization right now! Just fill out, sign, date and return the subscription card located inside the back cover of Volume I.

Card missing? Additional subscription cards available from publisher upon request.

Integrated Circuits Magazine is designed for *YOU.*

**Designers who must keep pace with contemporary engineering design techniques, practices and trends, and how they affect the selection and application of integrated circuits, microcomputers, boards, and systems.*

†Integrated Circuits Magazine is made available on a complimentary basis to those qualified recipients within the United States only.

Canadian and Foreign Subscriptions are available, prepaid by check or money order payable in United States currency, at the following rates: $35.00 per year Canadian/Foreign; $55.00 per year Foreign via Air Mail; $18.00 per year non-qualified Domestic United States.

Integrated Circuits Magazine
Circulation Department
645 Stewart Ave.
Garden City, NY 11530
(516) 222-2500
TWX: 510-222-1673

Don't miss the Sections on Semicustom ICs

Digital Gate Arrays, Standard Cells, and Linear Arrays Are All Covered

Vol. II, page 4425

Fairchild (Cont'd)

Manufacturer Device	Replacement Source	Device	IC Master Page
54LS192	Motorola	SN54LS192	
	National	DM54LS192	
	Raytheon	54LS192	
	Signetics	**54LS192**	**530**
	TI	**SN54LS192**	**990**
54LS193	Motorola	SN54LS193	
	National	DM54LS193	
	Signetics	**54LS193**	**530**
	TI	**SN54LS193**	**990**
54LS194A	Motorola	SN54LS194A	
	TI	**SN54LS194A**	**990**
54LS195A	Motorola	SN54LS195A	
	Signetics	**54LS195A**	**530**
	TI	**SN54LS195A**	**991**
54LS20	Motorola	SN54LS20	
	National	DM54LS20	
	Signetics	**54LS20**	**529**
	TI	**SN54LS20**	**926**
54LS21	Motorola	SN54LS21	
	National	DM54LS21	
	TI	**SN54LS21**	**927**
54LS22	Motorola	SN54LS22	
	National	DM54LS22	
	TI	**SN54LS22**	**927**
54LS240	**MMI**	**SN54LS240**	**804**
	Motorola	SN54LS240	
	TI	SN54LS240	
54LS241	**MMI**	**SN54LS241**	**804**
	Motorola	SN54LS241	
	TI	SN54LS241	
54LS244	**MMI**	**SN54LS244**	**804**
	Motorola	SN54LS244	
	TI	SN54LS244	
54LS245	**MMI**	**SN54LS245**	**804**
	Motorola	SN54LS245	
	National	DM54LS245	
	Signetics	**54LS245**	**530**
	TI	SN54LS245	
54LS247	Motorola	SN54LS247	
	National	DM54LS247	
	TI	**SN54LS247**	**1001**
54LS248	Motorola	SN54LS248	
	National	DM54LS248	
	Signetics	54LS248	
	TI	**SN54LS248**	**1002**
54LS249	Motorola	SN54LS249	
	National	DM54LS249	
	TI	**SN54LS249**	**1002**
54LS251	Motorola	SN54LS251	
	Signetics	54LS251	
	TI	**SN54LS251**	**1003**
54LS253	Motorola	SN54LS253	
	National	DM54LS253	
		DM7214	
	Signetics	54LS253	
	TI	**SN54LS253**	**1003**
54LS256	Motorola	SN54LS256	
54LS258A	Motorola	SN54LS258A	
	TI	**SN54LS258A**	**1005**
54LS259	Motorola	SN54LS259	
	TI	**SN54LS259**	**1005**
54LS26	Motorola	SN54LS26	
	National	DM54LS26	
	TI	**SN54LS26**	**928**
54LS260	Motorola	SN54LS260A	
	Signetics	54LS260A	
54LS266	Fairchild	9386	
	Motorola	SN54LS266	
	National	DM54LS266	
	Signetics	**54LS266**	**530**
	TI	**SN54LS266**	**1007**
54LS27	Motorola	SN54LS27	
	National	DM54LS27	
	TI	**SN54LS27**	**929**
54LS273	AMD	AM25LS273M	
	MMI	**SN54LS273**	**804**
	Motorola	SN54LS273	
	Signetics	**54LS273**	**530**
	TI	**SN54LS273**	**1007**
54LS279	Motorola	SN54LS279	
	National	DM54LS279	
	Signetics	54LS279	
	TI	**SN54LS279**	**1009**
54LS28	Motorola	SN54LS28	
	Signetics	**54LS194A**	**530**
		54LS28	
	TI	**SN54LS28**	**929**
54LS283	Motorola	SN54LS283	
	National	DM54LS283	
		(Continued)	
54LS283	Signetics	54LS283	
	TI	**SN54LS283**	**1011**
54LS289	National	DM54LS289	
	TI	SN54LS289	
		SN54LS289A	**1012**
54LS293	Motorola	SN54LS293	
	National	DM54LS293	
	Signetics	**54LS293**	**530**
	TI	**SN54LS293**	**1014**
54LS298	AMD	SN54LS298	
	Motorola	SN54LS298	
	TI	**SN54LS298**	**1015**
54LS299	AMD	SN54LS299	
	MMI	54LS299	
	Motorola	SN54LS299	
	TI	**SN54LS299**	**1016**
54LS30	Motorola	SN54LS30	
	National	DM54LS30	
	Signetics	54LS30	
	TI	**SN54LS30**	**929**
54LS32	National	DM54LS32	
	Signetics	**54LS32**	**529**
	TI	**SN54LS32**	**930**
54LS323	AMD	SN54LS323	
	Motorola	SN54LS323	
	TI	SN54LS323A	
54LS33	Motorola	SN54LS33	
	TI	**SN54LS33**	**930**
54LS347	**TI**	**SN54LS347**	**1019**
54LS352	Motorola	SN54LS352	
	National	DM54LS352	
	TI	**SN54LS352**	**1020**
54LS353	Motorola	SN54LS353	
	National	DM54LS353	
	TI	**SN54LS353**	**1021**
54LS365A	Motorola	SN54LS365A	
	Signetics	54LS365	
		54LS365A	**530**
	TI	SN54LS265A	
		SN54LS365A	**1023**
54LS366A	Motorola	SN54LS366A	
	National	DM54LS366	
	Signetics	54LS366A	
	TI	**SN54LS366A**	**1023**
54LS367A	Motorola	SN54LS367A	
	National	DM54LS367	
	Signetics	54LS367	
		54LS367A	**530**
	TI	**SN54LS367A**	**1024**
54LS368A	Motorola	SN54LS368A	
	National	DM54LS368	
	Signetics	54LS368	
		54LS368A	**530**
	TI	**SN54LS368A**	**1024**
54LS37	Motorola	SN54LS37	
	National	DM54LS37	
	Signetics	**54LS37**	**529**
	TI	**SN54LS37**	**932**
54LS375	Motorola	SN54LS375	
	Signetics	**54LS375**	**530**
	TI	**SN54LS375**	**1026**
54LS377	AMD	AM25LS377M	
	MMI	**SN54LS377**	**804**
	Motorola	SN54LS377	
	Signetics	**54LS377**	**530**
	TI	**SN54LS377**	**1027**
54LS378	AMD	SN54LS378	
	Motorola	SN54LS378	
	TI	**SN54LS378**	**1027**
54LS379	AMD	SN54LS379	
	Motorola	SN54LS379	
	TI	**SN54LS379**	**1028**
54LS38	Motorola	SN54LS38	
	National	DM54LS38	
	TI	**SN54LS38**	**932**
54LS390	Motorola	SN54LS390	
	TI	**SN54LS390**	**1031**
54LS393	Motorola	SN54LS393	
	TI	**SN54LS393**	**1031**
54LS399	AMD	SN54LS399	
	Motorola	SN54LS399	
	TI	**SN54LS399**	**1032**
54LS40	Motorola	SN54LS40	
	National	DM54LS40	
	TI	**SN54LS40**	**933**
54LS42	Motorola	SN54LS42	
	National	DM54LS42	
	Signetics	**54LS42**	**529**
	TI	**SN54LS42**	**933**
54LS47	Motorola	SN54LS47	
	National	DM54LS47	
	TI	**SN54LS47**	**935**
54LS48	Motorola	SN54LS48	
	National	DM54LS48	
	TI	**SN54LS48**	**935**
54LS49	Motorola	SN54LS49	
	National	DM54LS49	
	TI	**SN54LS49**	**935**
54LS490	Motorola	SN54LS490	
	TI	**SN54LS490**	**1043**
54LS51	Motorola	SN54LS51	
	National	DM54LS51	
	Signetics	54LS51	
	TI	**SN54LS51**	**936**
54LS534	MMI	54LS534	
54LS54	Motorola	SN54LS54	
	National	DM54LS54	
	TI	**SN54LS54**	**938**
54LS55	Motorola	SN54LS55	
	National	DM54LS55	
	TI	**SN54LS55**	**939**
54LS670	Motorola	SN54LS670	
	National	DM54LS670	
	Signetics	**54LS670**	**530**
	TI	**SN54LS670**	**1080**
54LS74	Motorola	SN54LS74A	
	National	DM54LS74	
		DM54LS74A	
	Signetics	54LS74	
	TI	SN54LS74	
		SN54LS74A	**945,946**
54LS83A	Motorola	SN54LS83A	
	National	DM54LS83A	
	Signetics	54LS83	
		54LS83A	
	TI	**SN54LS83A**	**949**
54LS85	Motorola	SN54LS85	
	National	DM54LS85	
	Signetics	**54LS85**	**529**
	TI	**SN54LS85**	**950**
54LS93	Motorola	SN54LS93	
	National	DM54LS93	
	Signetics	**54LS93**	**529**
	TI	**SN54LS93**	**953**
54LS95B	Motorola	SN54LS95B	
	National	DM54LS95B	
	Signetics	**54LS95B**	**529**
	TI	**SN54LS95B**	**954**
54S00	**Signetics**	**54S00**	**531**
	TI	**SN54S00**	**920**
54S02	**Signetics**	**54S02**	**531**
	TI	**SN54S02**	**920**
54S05A	**TI**	**SN54S05**	**921**
54S08	**Signetics**	**54S08**	**531**
	TI	**SN54S08**	**921**
54S09	**TI**	**SN54S09**	**923**
54S10	**TI**	**SN54S10**	**923**
54S11	**Signetics**	**54S11**	**531**
	TI	SN54S11	
54S112	**TI**	**SN54S112**	**959**
54S113	**TI**	**SN54S113**	**959**
54S114	**TI**	**SN54S114**	**960**
54S132	**TI**	**SN54S132**	**965**
54S133	**TI**	**SN54S133**	**965**
54S134	**TI**	**SN54S134**	**965**
54S135	**TI**	**SN54S135**	**966**
54S138	AMD	SN54S138	
	TI	**SN54S138**	**968**
54S139	AMD	SN54S139	
	Signetics	54S139	
	TI	**SN54S139**	**968**
54S140	National	DM54S140	
	Signetics	**54S140**	**531**
	TI	**SN54S140**	**969**
54S15	**TI**	**SN54S15**	**925**
54S151	AMD	SN54S151	
	Signetics	**54S151**	**531**
	TI	**SN54S151**	**972**
54S153	AMD	SN54S153	
	Signetics	**54S153**	**531**
	TI	**SN54S153**	**972**
54S157	AMD	SN54S157	
	Signetics	**54S157**	**531**
	TI	**SN54S157**	**975**
54S158	AMD	SN54S158	
	Signetics	**54S158**	**531**
	TI	**SN54S158**	**975**
54S174	AMD	SN54S174	
	TI	**SN54S174**	**983**
54S175	AMD	SN54S175	
	Fairchild	93S411	
	TI	**SN54S175**	**983**
54S182	Fairchild	93S42	
	MMI	**SN54S182**	**819**
	TI	**SN54S182**	**986**
54S189	AMD	SN54S189	
	National	DM54S189	
	Signetics	**54S189**	**532**
	TI	SN54S189	
54S194	AMD	SN54S194	
	TI	**SN54S194**	**990**
54S195	AMD	SN54S195	
	Fairchild	93S00M	
54S20	**TI**	**SN54S20**	**926**
54S22	National	DM54S22	
	TI	**SN54S22**	**927**
54S253	AMD	SN54S253	
	Signetics	54S253	
54S258	AMD	SN54S258	
	Signetics	54S258	
	TI	**SN54S258**	**1005**
54S260	Signetics	54S260	
	TI	**SN54S260**	**1006**
54S289	AMD	SN5489-1	
		SN54S289	
		SN74S289	
	National	DM5489	
		DM54S289	
		MM54S289	
	Signetics	54S289	
		54S301	**532**
		S8225	
		S82S25	
	TI	SN5489	
		SN54S289	
54S30	**TI**	**SN54S30**	**929**
54S32	**TI**	**SN54S32**	**930**
54S40	**TI**	**SN54S40**	**933**
54S51	**TI**	**SN54S51**	**936**
54S64	**TI**	**SN54S64**	**941**
54S74	TI	SN54S74	
54S86	**Signetics**	**54S86**	**531**
	TI	**SN54S86**	**950**
55107	Motorola	MC55107	
	National	DS55107	
		LM55107A	
	TI	SN55107	
		SN55107B	
55108	Motorola	MC55108	
	National	DS55108	
		LM55108A	
	TI	SN55108	
		SN55108B	
55450	Signetics	55450	
	SiliconG	SG55450	
	TI	SN55450	
55451	National	DS55451	
	Signetics	55451	
	SiliconG	SG55451	
	TI	SN55451	
55452	National	DS55452	
	Signetics	55452	
	SiliconG	SG55452	
	TI	SN55452	
55453	National	DS55453	
		LM55453	
	Signetics	55453	
	SiliconG	SG55453	
	TI	SN55453	
68316	AMD	AM9218	
	Fairchild	3516	
		F3516	
		F35316	
		F68316	**1464**
	GI	R03-9316	
	GTEMicro	2316	
	Intel	2316	
	Mostek	MK34000	
	Motorola	MCM68316	
		MCM68A316	
		MM2316	
	National	MM52116	
		MM5258	
	NCR	2316	
		NCR2316	
	NEC	μPD2316	
	OKI	**MSM2916**	**4118**
	Rockwell	R2316	
	SGS	M2316	
	TI	SBP8316	
	Toshiba	TMM331A	
		TMM334	
7400	Hitachi	HD7400	
	National	DM7400	
		(Continued)	

♠ Discontinued

Bold face device numbers indicate manufacturers data is provided in the IC Master on the pages noted.

© IC MASTER 1984

Fairchild (Cont'd)

Manufacturer Device	Replacement Source	Device	IC Master Page
7400	**Signetics**	**7400**	**860**
	TI	**SN7400**	**920**
	Toshiba	TC7400	
7401	Hitachi	HD7401	
	National	DM7401	
	TI	**SN7401**	**920**
7402	Hitachi	HD7402	
	National	DM7402	
	Signetics	**7402**	**860**
	TI	**SN7402**	**920**
7403	Hitachi	HD7403	
	National	DM7403	
	Signetics	**7403**	**860**
	TI	**SN7403**	**921**
7404	Hitachi	HD7404	
	National	DM7404	
	Signetics	**7404**	**860**
	TI	**SN7404**	**921**
	Toshiba	TC7404	
7405	Hitachi	HD7405	
	National	DM7405	
	Signetics	**7405**	**860**
	TI	**SN7405**	**921**
7406	Hitachi	HD7406	
	National	DM7406	
	Signetics	**7406**	**860**
	TI	**SN7406**	**922**
7407	Hitachi	HD7407	
	National	DM7407	
	Signetics	**7407**	**860**
	TI	**SN7407**	**922**
7408	Hitachi	HD7408	
	National	DM7408	
	Signetics	**7408**	**860**
	TI	**SN7408**	**922**
7409	Hitachi	HD7409	
	National	DM7409	
	TI	**SN7409**	**923**
7410	Hitachi	HD7410	
	National	DM7410	
	Signetics	**7410**	**860**
	TI	**SN7410**	**923**
	Toshiba	TC7410	
74107	Hitachi	HD74107	
	National	DM74107	
	Signetics	**74107**	**860**
	TI	**SN74107**	**957**
7411	Hitachi	HD7411	
	National	DM7411	
	Signetics	**7411**	**860**
7412	Hitachi	HD7412	
	TI	**SN7412**	**924**
74121	Hitachi	HD74121	
	National	DM74121	
	Signetics	**74121**	**860**
	TI	**SN74121**	**961**
74122	Fairchild	9601	
	National	DM8601	
		DM9601	
	Raytheon	RF8601	
		RF9601	
	Signetics	**N8T22**	**876**
		S8T22	
	TI	**SN74122**	**961**
74123	National	DM74123	
	Signetics	**74123**	**861**
	TI	**SN74123**	**962**
74125	Hitachi	HD74125	
	National	DM74125	
		DM8093	
	Signetics	**74125**	**861**
	TI	**SN74125**	**963**
		SN74425	**1034**
74126	Hitachi	HD74126	
	National	DM74126	
		DM8094	
	Signetics	**74126**	**861**
	TI	**SN74126**	**963**
		SN74426	**1034**
7413	Hitachi	HD7413	
	National	DM7413	
	Signetics	**7413**	**860**
	TI	**SN7413**	**924**
74132	Hitachi	HD74132	
	National	DM74132	
	Signetics	**74132**	**861**
	TI	**SN74132**	**965**
74136	Hitachi	HD74136	
	TI	**SN74136**	**966**
7414	Hitachi	HD7414	
	National	DM7414	
	Signetics	**7414**	**860**
	TI	**SN7414**	**924**
74141	Fairchild	93141	
	Hitachi	HD74141	
		HD7441	
	National	DM74141	
		DM7441	
	Signetics	74141	
		7441	
	TI	SN74141	
74145	Hitachi	HD74145	
	National	DM74145	
	Signetics	**74145**	**861**
	TI	**SN74145**	**970**
74150	Hitachi	HD74150	
	National	DM74150	
	Signetics	**74150**	**861**
	TI	**SN74150**	**971**
74151	Hitachi	HD74151	
	National	DM74151	
	Signetics	**74151**	**861**
	TI	SN74151	
		SN74151A	**972**
74153	Hitachi	HD74153	
	National	DM74153	
	Signetics	**74153**	**861**
	TI	**SN74153**	**972**
74155	National	DM74155	
	Signetics	**74155**	**861**
	TI	**SN74155**	**974**
74156	Hitachi	HD74156	
	National	DM74156	
	Signetics	**74156**	**861**
	TI	**SN74156**	**974**
74159	**TI**	**SN74159**	**976**
7416	Hitachi	HD7416	
	National	DM7416	
	Signetics	**7416**	**860**
	TI	**SN7416**	**925**
74160	Hitachi	HD74160	
	National	DM74160	
	Signetics	**74160**	**861**
	TI	**SN74160**	**977**
74161	Hitachi	HD74161	
	National	DM74161	
	Signetics	**74161**	**861**
	TI	**SN74161**	**977**
74162	Hitachi	HD74162	
	National	DM74162	
	TI	**SN74162**	**978**
74163	Hitachi	HD74163	
	National	DM74163	
	Signetics	**74163**	**861**
	TI	**SN74163**	**978**
74164	AMD	SN74164	
	Hitachi	HD74164	
	National	DM74164	
		DM8570	
		DM8579	
	Signetics	**74164**	**861**
	TI	**SN74164**	**979**
74165	National	DM74165	
		DM8590	
	Signetics	**74165**	**861**
	TI	**SN74165**	**979**
74166	Hitachi	HD74166	
	National	DM74166	
	Signetics	**74166**	**861**
	TI	**SN74166**	**979**
7417	Hitachi	HD7417	
	National	DM7417	
	Signetics	**7417**	**860**
	TI	**SN7417**	**925**
74170	Hitachi	HD74170	
	National	DM74170	
	Signetics	**74170**	**861**
	TI	**SN74170**	**981**
74173	National	DM74173	
		DM8551	
	Raytheon	RC8T10	
	Signetics	**N8T10**	**876**
	TI	**SN74173**	**982**
74174	Hitachi	HD74174	
	National	DM74174	
	Signetics	**74174**	**861**
	TI	**SN74174**	**983**
74175	Hitachi	HD74175	
	National	DM74175	
	Signetics	**74175**	**861**
	TI	**SN74175**	**983**
74176	Fairchild	96176	
	National	DM74176	
		DM8280	
	Raytheon	RC8280	
	Signetics	74176	
		N8280	
	TI	**SN74176**	**984**
74177	National	DM74177	
		DM8281	
	Raytheon	RC8281	
	Signetics	74177	
		N8281	
	TI	**SN74177**	**984**
74179	Raytheon	RC8271	
	Signetics	**N8271**	**876**
	TI	**SN74179**	**985**
74180	Hitachi	HD74180	
	National	DM74180	
	Signetics	**74180**	**861**
	TI	**SN74180**	**985**
74190	Hitachi	HD74190	
	National	DM74190	
	Signetics	**74190**	**861**
	TI	**SN74190**	**989**
74191	Hitachi	HD74191	
	National	DM74191	
	Signetics	**74191**	**861**
	TI	**SN74191**	**989**
74192	Fairchild	9360	
	National	DM74192	
		DM8560	
	Raytheon	RC9360	
	Signetics	**74192**	**861**
	TI	**SN74192**	**990**
74193	National	DM74193	
		DM8563	
	Signetics	**74193**	**861**
	TI	SN74129	
		SN74193	**990**
74194	Hitachi	HD74194	
	National	DM74194	
	Signetics	**74194**	**861**
	TI	**SN74194**	**990**
74195	**National**	**DM74195**	
	Signetics	**74195**	**861**
	TI	**SN74195**	**991**
74196	National	DM74196	
		DM8290	
	Raytheon	RC8290	
	Signetics	74196	
	TI	**SN74196**	**991**
74197	National	DM74197	
		DM8291	
	Raytheon	RC8291	
	Signetics	74197	
	TI	**SN74197**	**992**
74198	Hitachi	HD74198	
	National	DM74198	
	Signetics	74198	
	TI	**SN74198**	**992**
74199	National	DM74199	
	Signetics	**74199**	**861**
	TI	**SN74199**	**993**
7420	Fairchild	9004	
	Hitachi	HD7420	
	National	DM7420	
		DM9004C	
	Signetics	**7420**	**860**
	TI	**SN7420**	**926**
	Toshiba	TC7420	
7421	**Signetics**	**7421**	**860**
7422	Hitachi	HD7422	
	TI	**SN7422**	**927**
7423	National	DM7423	
	TI	**SN7423**	**927**
7425	National	DM7425	
	TI	**SN7425**	**928**
7426	Hitachi	HD7426	
	National	DM7426	
		DM8810	
	Signetics	**7426**	**860**
	TI	**SN7426**	**928**
7427	Hitachi	HD7427	
	National	DM7427	
	Signetics	**7427**	**860**
	TI	**SN7427**	**929**
74279	Signetics	74279	
	TI	**SN74279**	**1009**
74283	TI	SN74283	
74290	**TI**	**SN74290**	**1012**
74293	**TI**	**SN74293**	**1014**
74298	**Signetics**	**74298**	**862**
	TI	**SN74298**	**1015**
7430	Hitachi	HD7430	
	National	DM7430	
	Signetics	**7430**	**860**
	TI	**SN7430**	**929**
7432	Hitachi	HD7432	
	National	DM7432	
	Signetics	**7432**	**860**
	TI	**SN7432**	**930**
7437	Hitachi	HD7437	
	National	DM7437	
	Signetics	**7437**	**860**
	TI	**SN7437**	**932**
7438	Hitachi	HD7438	
	National	DM7438	
	Signetics	**7438**	**860**
	TI	**SN7438**	**932**
7439	**Signetics**	**7439**	**860**
7440	Hitachi	HD7440	
	National	DM7440	
	Signetics	**7440**	**860**
	TI	**SN7440**	**933**
7442	Hitachi	HD7442	
	National	DM7442	
		DM8842	
	Signetics	**7442**	**860**
	TI	SN7442	
		SN7442A	**933**
7445	Hitachi	HD7445	
	National	DM7445	
	Signetics	**7445**	**860**
	TI	**SN7445**	**934**
7446	Hitachi	HD7446	
	TI	SN7446	
		SN7446A	**935**
7447	Hitachi	HD7447	
	National	DM7447	
	TI	SN7447	
		SN7447A	**935**
7448	National	DM7448	
		DM8848	
	Signetics	N8T54	
	TI	**SN7448**	**935**
		SN7448A	
7450	Hitachi	HD7450	
	National	DM7450	
	Signetics	**7450**	**860**
	TI	**SN7450**	**936**
7451	Hitachi	HD7451	
	National	DM7451	
	Signetics	**7451**	**860**
	TI	SN7451	
7453	Hitachi	HD7453	
	National	DM7453	
	TI	**SN7453**	**937**
7454	Hitachi	HD7454	
	National	DM7454	
	TI	**SN7454**	**938**
7460	Hitachi	HD7460	
	National	DM7460	
	TI	**SN7460**	**940**
7470	Hitachi	HD7470	
	National	DM7470	
	TI	**SN7470**	**943**
7472	Hitachi	HD7472	
	National	DM7472	
	TI	**SN7472**	**944**
7473	Hitachi	HD7473	
	National	DM7473	
	Signetics	**7473**	**860**
	TI	**SN7473**	**944**
7474	Hitachi	HD7474	
	National	DM7474	
	Signetics	**7474**	**860**
	TI	SN7474	
7475	Hitachi	HD7475	
	National	DM7475	
	Signetics	**7475**	**860**
	TI	**SN7475**	**946**
7476	Hitachi	HD7476	
	National	DM7476	
	Signetics	**7476**	**860**
	TI	**SN7476**	**946**
7483	Hitachi	HD7483	
	National	DM7483	
	Signetics	**7483**	**860**
	TI	SN7483	
		SN7483A	**949**
7485	Hitachi	HD7485	
	National	DM7485	

(Continued)

◆ Discontinued

The manufacturers report their devices can be used as direct replacements.
Performance details often differ, so compare the specifications considering your requirements.

Fairchild (Cont'd)

Manufacturer Device	Replacement Source	Device	IC Master Page
7485	**Signetics**	**7485**	**860**
	TI	**SN7485**	**950**
7486	Hitachi	HD7486	
	National	DM7486	
	Signetics	**7486**	**860**
	TI	**SN7486**	**950**
7488	Motorola	MC4002	
	National	DM7488	
	Signetics	7488	
		N8224	
	TI	SN7488	
		SN7488A	
7489	Hitachi	HD7489	
		HD74S289	
	National	DM7489	
		DM74S289	
		DM8589	
		MM74S289	
	Signetics	74S289	
		N82S25	
	TI	SN74S289	
7490	Hitachi	HD7490	
	National	DM7490	
	Signetics	**7490**	**860**
	TI	SN7490	
		SN7490A	**952**
7491	Hitachi	HD7491	
	National	DM7491	
	Signetics	**7491**	**860**
	TI	SN7491	
		SN7491A	**952**
7492	Hitachi	HD7492	
	National	DM7492	
	Signetics	**7492**	**860**
	TI	SN7492	
		SN7492A	**952**
7493	Hitachi	HD7493	
	National	DM7493	
	Signetics	**7493**	**860**
	TI	SN7493	
		SN7493A	**953**
7494	Hitachi	HD7494	
	Signetics	**7494**	**860**
	TI	**SN7494**	**953**
7495	Hitachi	HD7495	
	National	DM7495	
	Signetics	7495	
	TI	SN7495	
		SN7495A	**954**
7496	Hitachi	HD7496	
	National	DM7496	
	Signetics	**7496**	**860**
	TI	**SN7496**	**954**
7497	**TI**	**SN7497**	**954**
74F00	**Motorola**	**MC74F00**	**822**
	Signetics	**74F00**	**879**
74F02	**Motorola**	**MC74F02**	**822**
	Signetics	**74F02**	**879**
74F04	**Motorola**	**MC74F04**	**822**
	Signetics	**74F04**	**879**
74F08	**Motorola**	**MC74F08**	**822**
	Signetics	**74F08**	**879**
74F10	**Motorola**	**MC74F10**	**822**
	Signetics	**74F10**	**879**
74F109	**Motorola**	**MC74F109**	**822**
	Signetics	**74F109**	**879**
74F11	**Motorola**	**MC74F11**	**822**
	Signetics	**74F11**	**879**
74F138	**Motorola**	**MC74F138**	**822**
	Signetics	**74F138**	**879**
74F139	**Motorola**	**MC74F139**	**822**
	Signetics	**74F139**	**879**
74F157	**Signetics**	**74F157**	**879**
74F158	**Signetics**	**74F158**	**879**
74F20	**Motorola**	**MC74F20**	**822**
	Signetics	**74F20**	**879**
74F240	**Motorola**	**MC74F240**	**822**
	Signetics	**74F240**	**879,881**
74F241	**Motorola**	**MC74F241**	**822**
	Signetics	**74F241**	**879,881**
74F242	**Motorola**	**MC74F242**	**822**
	Signetics	**74F242**	**879**
74F243	**Motorola**	**MC74F243**	**822**
	Signetics	**74F243**	**879**
74F244	**Motorola**	**MC74F244**	**822**
	Signetics	**74F244**	**879,882**
74F257	**Signetics**	**74F257**	**879**
74F258	**Signetics**	**74F258**	**879**
74F32	**Motorola**	**MC74F32**	**822**
	Signetics	**74F32**	**879**
74F373	**Motorola**	**MC74F373**	**822**
	Signetics	**74F373**	**879,886**
74F374	**Motorola**	**MC74F374**	**822**
	Signetics	**74F374**	**879,886**
74F521	**Signetics**	**74F521**	**879**
74F533	**Motorola**	**MC74F533**	**822**
	Signetics	**74F533**	**879**
74F534	**Motorola**	**MC74F534**	**822**
	Signetics	**74F534**	**879**
74F557	MMI	74S557	
74F558	**AMD**	**AM25S558**	**701**
	MMI	74S558	
74F74	**Motorola**	**MC74F74**	**822**
	Signetics	**74F74**	**879**
74F86	**Signetics**	**74F86**	**879**
74H00	National	DM74H00	
	TI	**SN74H00**	**920**
74H01	Fairchild	74H08	
	National	DM74H01	
		DM74H08	
	TI	**SN74H01**	**920**
74H04	National	DM74H04	
	TI	**SN74H04**	**921**
74H05	**TI**	**SN74H05**	**921**
74H08	Fairchild	74H01	
	National	DM74H01	
		DM74H08	
	TI	**SN74H01**	**920**
74H10	National	DM74H10	
	TI	**SN74H10**	**923**
74H101	Signetics	74H101	
	TI	**SN74H101**	**956**
74H103	National	DM74H103	
	TI	**SN74H103**	**956**
74H106	National	DM74H106	
	TI	**SN74H106**	**957**
74H108	National	DM74H108	
	TI	**SN74H108**	**958**
74H11	National	DM74H11	
	TI	**SN74H11**	**923**
74H183	Hitachi	HD74H183	
	TI	**SN74H183**	**986**
74H20	National	DM74H20	
	TI	**SN74H20**	**926**
74H21	National	DM74H21	
	TI	**SN74H21**	**927**
74H22	**TI**	**SN74H22**	**927**
74H30	National	DM74H30	
	TI	**SN74H30**	**929**
74H40	National	DM74H40	
	TI	**SN74H40**	**933**
74H50	National	DM74H50	
	TI	**SN74H50**	**936**
74H51	National	DM74H51	
	TI	**SN74H51**	**936**
74H52	**TI**	**SN74H52**	**937**
74H53	**TI**	**SN74H53**	**937**
74H54	**TI**	**SN74H54**	**938**
74H55	**TI**	**SN74H55**	**939**
74H61	**TI**	**SN74H61**	**940**
74H62	National	DM74H62	
	TI	**SN74H62**	**941**
74H72	**TI**	**SN74H72**	**944**
74H73	**TI**	**SN74H73**	**944**
74H74	National	DM74H74	
	TI	**SN74H74**	**945**
74H87	**TI**	**SN74H87**	**951**
74LS00	Hitachi	HD74LS00	
	Motorola	SN74LS00	
	National	DM74LS00	
	SGS	T74LS00	
	Signetics	74LS00	
	TI	**SN74LS00**	**920**
74LS01	Hitachi	HD74LS01	
	Motorola	SN74LS01	
	National	DM74LS01	
	Signetics	74LS01	
	TI	**SN74LS01**	**920**
74LS02	Hitachi	HD74LS02	
	Motorola	SN74LS02	
	National	DM74LS02	
	SGS	T74LS02	
	Signetics	74LS02	
	TI	**SN74LS02**	**920**
74LS03	Hitachi	HD74LS03	
	Motorola	SN74LS03	
	National	DM74LS03	
	SGS	T74LS03	
	TI	**SN74LS03**	**921**
74LS04	Hitachi	HD74LS04	
	Motorola	SN74LS04	
	National	DM74LS04	
		(Continued)	
74LS04	SGS	T74LS04	
	Signetics	74LS04	
	TI	**SN74LS04**	**921**
74LS05	Hitachi	HD74LS05	
	Motorola	SN74LS05	
	National	DM74LS05	
	NEC	μPB74LS05	
	SGS	T74LS05	
	Signetics	74LS05	
	TI	**SN74LS05**	**921**
74LS08	Hitachi	HD74LS08	
	Motorola	SN74LS08	
	National	DM74LS08	
	SGS	T74LS08	
	Signetics	74LS08	
	TI	**SN74LS08**	**922**
74LS09	Hitachi	HD74LS09	
	Motorola	SN74LS09	
	National	DM74LS09	
	SGS	T74LS09	
	TI	**SN74LS09**	**923**
74LS10	Hitachi	HD74LS10	
	Motorola	SN74LS10	
	National	DM74LS10	
	SGS	T74LS10	
	Signetics	74LS10	
	TI	**SN74LS10**	**923**
74LS109	Hitachi	HD74LS109	
	Motorola	SN74LS109	
		SN74LS109A	
	National	DM74LS109	
	SGS	T74LS109	
	Signetics	74LS109	
	TI	**SN74LS109A**	**958**
74LS11	Hitachi	HD74LS11	
	Motorola	SN74LS11	
	National	DM74LS11	
	SGS	T74LS11	
	Signetics	74LS11	
	TI	**SN74LS11**	**923**
74LS112	Hitachi	HD74LS112	
	Motorola	SN74LS112A	
	National	DM74LS112	
	SGS	T74LS112	
	Signetics	74LS112	
	TI	**SN74LS112A**	**959**
74LS113	Hitachi	HD74LS113	
	Motorola	SN74LS113A	
	National	DM74LS113	
	SGS	T74LS113	
	Signetics	74LS113	
	TI	**SN74LS113A**	**959**
74LS114	Hitachi	HD74LS114	
	Motorola	SN74LS114A	
	National	DM74LS114	
	SGS	T74LS114	
	TI	**SN74LS114A**	**960**
74LS125A	Motorola	SN74LS125A	
	National	DM74LS125	
	SGS	T74LS125	
	Signetics	74LS125A	
	TI	**SN74LS125A**	**962**
74LS126	Motorola	SN74LS126A	
	National	DM74LS126	
	SGS	T74LS126	
	Signetics	74LS126A	
	TI	**SN74LS126A**	**962**
74LS13	Hitachi	HD74LS13	
	Motorola	SN74LS13	
	National	DM74LS13	
	Signetics	74LS13	
	TI	**SN74LS13**	**924**
74LS132	Hitachi	HD74LS132	
	Motorola	SN74LS132	
	National	DM74LS132	
	SGS	T74LS132	
	Signetics	74LS132	
	TI	**SN74LS132**	**965**
74LS133	Motorola	SN74LS133	
74LS136	Hitachi	HD74LS136	
	Motorola	SN74LS136	
	National	DM74LS136	
	SGS	T74LS136	
	Signetics	74LS136	
	TI	**SN74LS136**	**966**
74LS138	Hitachi	HD74LS138	
	Motorola	SN74LS138	
	National	DM74LS138	
	SGS	T74LS138	
	Signetics	74LS138	
	TI	**SN74LS138**	**968**
74LS139	Hitachi	HD74LS139	
	Motorola	SN74LS139	
	National	DM74LS139	
	SGS	T74LS139	
	Signetics	74LS139	
	TI	**SN74LS139**	**968**
74LS14	Hitachi	HD74LS14	
	Motorola	SN74LS14	
	National	DM74LS14	
	Signetics	74LS14	
	TI	**SN74LS14**	**924**
74LS145	Motorola	SN74LS145	
	TI	**SN74LS145**	**970**
74LS15	Hitachi	HD74LS15	
	Motorola	SN74LS15	
	National	DM74LS15	
	SGS	T74LS15	
	TI	**SN74LS15**	**925**
74LS151	Hitachi	HD74LS151	
		HD74LS151A	
	Motorola	SN74LS151	
	National	DM74LS151	
	SGS	T74LS151	
	Signetics	74LS151	
	TI	**SN74LS151**	**972**
74LS153	Hitachi	HD74LS153	
	Motorola	SN74LS153	
	National	DM74LS153	
	SGS	T74LS153	
	Signetics	74LS153	
	TI	**SN74LS153**	**972**
74LS155	Hitachi	HD74LS155	
	Motorola	SN74LS155	
	National	DM74LS155	
	Signetics	74LS155	
	TI	**SN74LS155**	**974**
74LS156	Hitachi	HD74LS156	
	Motorola	SN74LS156	
	National	DM74LS156	
	SGS	T74LS156	
	Signetics	74LS156	
	TI	**SN74LS156**	**974**
74LS157	Hitachi	HD74LS157	
	Motorola	SN74LS157	
	National	DM74LS157	
	SGS	T74LS157	
	Signetics	74LS157	
	TI	**SN74LS157**	**975**
74LS158	Hitachi	HD74LS158	
	Motorola	SN74LS158	
	National	DM74LS158	
	SGS	T74LS158	
	Signetics	74LS158	
	TI	**SN74LS158**	**975**
74LS160	Hitachi	HD74LS160A	
	Motorola	SN74LS160A	
	National	DM74LS160	
	SGS	T74LS160	
	Signetics	74LS160	
		74LS160A	
	TI	**SN74LS160A**	**977**
74LS161A	Hitachi	HD74LS161A	
	Motorola	SN74LS161A	
	National	DM74LS161	
	NEC	μPB74LS161	
	SGS	T74LS161	
	Signetics	74LS161A	
	TI	**SN74LS161A**	**977**
74LS162	Hitachi	HD74LS162A	
	Motorola	SN74LS162A	
	National	DM74LS162	
	SGS	T74LS162	
	Signetics	74LS162A	
	TI	**SN74LS162A**	**978**
74LS163	Hitachi	HD74LS163	
		HD74LS163A	
	Motorola	SN74LS163A	
	National	DM74LS163	
	SGS	T74LS163	
	Signetics	74LS163A	
	TI	**SN74LS163A**	**978**
74LS164	Hitachi	HD74LS164	
	Motorola	SN74LS164A	
	National	DM74LS164	
	SGS	T74LS164	
	Signetics	74LS164	
		74LS164A	
	TI	**SN74LS164**	**979**
74LS165	Motorola	SN74LS165	
	SGS	T74LS165	
	TI	**SN74LS165**	**979**

◆ Discontinued

Bold face device numbers indicate manufacturers data is provided in the IC Master on the pages noted.

Fairchild (Cont'd)

Manufacturer Device	Replacement Source	Device	IC Master Page
74LS168	Hitachi	HD74LS168	
	Motorola	SN74LS168	
	National	DM74LS168	
	Signetics	74LS168A	
	TI	SN74LS168	
74LS169	Hitachi	HD74LS169	
	Motorola	SN74LS169	
	National	DM74LS169	
	Signetics	74LS169A	
74LS170	Motorola	SN74LS170	
	National	DM74LS170	
	SGS	T74LS170	
	Signetics	74LS170	
	TI	**SN74LS170**	**981**
74LS173	Motorola	SN74LS173A	
	National	DM74LS173	
	SGS	T74LS173	
	Signetics	74LS173	
	TI	**SN74LS173A**	**982**
74LS174	Hitachi	HD74LS174	
	Motorola	SN74LS174	
	National	DM74LS174	
	SGS	T74LS174	
	Signetics	74LS174	
	TI	**SN74LS174**	**983**
74LS175	Hitachi	HD74LS175	
	Motorola	SN74LS175	
	SGS	T74LS175	
	Signetics	74LS175	
	TI	**SN74LS175**	**983**
74LS181	Hitachi	HD74LS181	
	Motorola	SN74LS181	
	SGS	T74LS181	
	Signetics	74LS181	
	TI	**SN74LS181**	**985**
74LS189	National	DM74LS189	
	TI	**SN74LS189A**	**988**
74LS190	Hitachi	HD74LS190	
	Motorola	SN74LS190	
	National	DM74LS190	
	SGS	T74LS190	
	~~**TI**~~	~~**SN74LS190**~~	~~**989**~~
74LS191	Hitachi	HD74LS191	
	Motorola	SN74LS191	
	National	DM74LS191	
	SGS	T74LS191	
	Signetics	74LS191	
	TI	**SN74LS191**	**989**
74LS192	Hitachi	HD74LS192	
	Motorola	SN74LS192	
	National	DM74LS192	
	SGS	T74LS192	
	Signetics	74LS192	
	TI	**SN74LS192**	**990**
74LS193	Hitachi	HD74LS193	
	Motorola	SN74LS193	
	National	DM74LS193	
	SGS	T74LS193	
	Signetics	74LS193	
	TI	**SN74LS193**	**990**
74LS194A	Hitachi	HD74LS194A	
	Motorola	SN74LS194A	
	National	DM74LS194	
	SGS	T74LS194A	
	Signetics	74LS194A	
	TI	**SN74LS194A**	**990**
74LS195A	Hitachi	HD74LS195A	
	Motorola	SN74LS195A	
	National	DM74LS195	
	SGS	T74LS195A	
	Signetics	74LS195A	
	TI	**SN74LS195A**	**991**
74LS196	Hitachi	HD74LS196	
	Motorola	SN74LS196	
	National	DM74LS196	
	Signetics	N82S80	
	TI	**SN74LS196**	**991**
74LS197	Hitachi	HD74LS197	
	Motorola	SN74LS197	
	National	DM74LS197	
	Signetics	74LS197	
	TI	**SN74LS197**	**992**
74LS20	Hitachi	HD74LS20	
	Motorola	SN74LS20	
	National	DM74LS20	
	SGS	T74LS20	
	Signetics	74LS20	
	TI	**SN74LS20**	**926**
74LS21	Hitachi	HD74LS21	
	Motorola	SN74LS21	
		(Continued)	

Manufacturer Device	Replacement Source	Device	IC Master Page
74LS21	National	DM74LS21	
	SGS	T74LS21	
	Signetics	74LS21	
	TI	**SN74LS21**	**927**
74LS22	Hitachi	HD74LS22	
	Motorola	SN74LS22	
	National	DM74LS22	
	SGS	T74LS22	
	TI	**SN74LS22**	**927**
74LS221	Hitachi	HD74LS221	
	Motorola	SN74LS221	
	National	DM74LS221	
	TI	**SN74LS221**	**994**
74LS240	Hitachi	HD74LS240	
	MMI	**SN74LS240**	**804**
	Motorola	SN74LS240	
	Signetics	74LS240	
	TI	SN74LS240	
74LS241	Hitachi	HD74LS241	
	MMI	**SN74LS241**	**804**
	Motorola	SN74LS241	
	Signetics	74LS241	
	TI	SN74LS241	
74LS242A	Motorola	SN74LS242	
	Signetics	74LS242	
	TI	SN74LS242	
74LS243A	Motorola	SN74LS243	
	Signetics	74LS243	
	TI	SN74LS243	
74LS244	Hitachi	HD74LS244	
	MMI	**SN74LS244**	**804**
	Motorola	SN74LS244	
	Signetics	74LS244	
	TI	SN74LS244	
74LS245	GTEMicro	G74SC245	
	Mitel	MD74SC245	
	MMI	**SN74LS245**	**804**
	Motorola	SN74LS245	
	National	DM74LS245	
	Plessey	MV74SC245	
	SPI	SP74SC245	
	Signetics	74LS245	
		N8T245	**876**
	~~TI~~	~~**SN74LS245**~~	
74LS247	Hitachi	HD74LS247	
	Motorola	SN74LS247	
	National	DM74LS247	
	TI	**SN74LS247**	**1001**
74LS248	Hitachi	HD74LS248	
	Motorola	SN74LS248	
	National	DM74LS248	
	SGS	T74LS248	
	TI	**SN74LS248**	**1002**
74LS249	Hitachi	HD74LS249	
	Motorola	SN74LS249	
	National	DM74LS249	
	SGS	T74LS249	
	TI	**SN74LS249**	**1002**
74LS251	Hitachi	HD74LS251	
	Motorola	SN74LS251	
	National	DM74LS251	
	SGS	T74LS251	
	Signetics	74LS251	
	TI	**SN74LS251**	**1003**
74LS253	Hitachi	HD74LS253	
	Motorola	SN74LS253	
	National	DM74LS253	
		DM8214	
	SGS	T74LS253	
	Signetics	74LS253	
	TI	**SN74LS253**	**1003**
74LS256	Motorola	SN74LS256	
	Signetics	74LS256	
74LS257A	Hitachi	HD74LS257	
	Motorola	SN74LS257A	
	National	DM74LS257	
	SGS	T74LS257	
	Signetics	74LS257	
		74LS257A	
	TI	SN74LS257	
74LS258A	Hitachi	HD74LS258	
	Motorola	SN74LS258A	
	National	DM74LS258	
	SGS	T74LS258	
	Signetics	74LS258	
	TI	SN74LS258	
74LS259	Motorola	SN74LS259	
	SGS	T74LS259	
	Signetics	74LS259	
	TI	**SN74LS259**	**1005**
74LS26	Hitachi	HD74LS26	
	Motorola	SN74LS26	
		(Continued)	

Manufacturer Device	Replacement Source	Device	IC Master Page
74LS26	National	DM74LS26	
	SGS	T74LS26	
	Signetics	74LS26	
	TI	**SN74LS26**	**928**
74LS260	Motorola	SN74LS260	
	Signetics	74LS260	
74LS266	Motorola	SN74LS266	
	National	DM74LS266	
	Raytheon	RC8242	
	SGS	T74LS266	
	Signetics	74LS266	
		N8242	**876**
	TI	**SN74LS266**	**1007**
74LS27	Hitachi	HD74LS27	
	Motorola	SN74LS27	
	National	DM74LS27	
	SGS	T74LS27	
	Signetics	74LS27	
	TI	**SN74LS27**	**929**
74LS273	**AMD**	**AM25LS273**	**1427**
	MMI	**SN74LS273**	**804**
	Motorola	SN74LS273	
	SGS	T74LS273	
	Signetics	74LS273	
	TI	**SN74LS273**	**1007**
74LS279	Hitachi	HD74LS279	
	Motorola	SN74LS279	
	National	DM74LS279	
	Signetics	74LS279	
	TI	**SN74LS279**	**1009**
74LS28	Motorola	SN74LS28	
	SGS	T74LS28	
	TI	**SN74LS28**	**929**
74LS283	Hitachi	HD74LS283	
		HD74LS283A	
	Motorola	SN74LS283	
	National	DM74LS283	
	SGS	T74LS283	
	Signetics	74LS283	
	TI	**SN74LS283**	**1011**
74LS289	National	DM74LS289	
	TI	**SN74LS289A**	**1012**
74LS290	Hitachi	HD74LS290	
	Motorola	SN74LS290	
	National	DM74LS290	
	SGS	T74LS290	
	Signetics	74LS290	
	TI	**SN74LS290**	**1012**
74LS293	Hitachi	HD74LS293	
	Motorola	SN74LS293	
	National	DM74LS293	
	SGS	T74LS293	
	Signetics	74LS293	
	TI	**SN74LS293**	**1014**
74LS295A	Motorola	SN74LS295A	
	SGS	T74LS295A	
	Signetics	74LS295A	
		74LS295B	
	TI	**SN74LS295B**	**1014**
74LS298	Hitachi	HD74LS298	
	Motorola	SN74LS298	
	SGS	T74LS298	
	Signetics	74LS298	
	TI	**SN74LS298**	**1015**
74LS299	AMD	SN74LS299	
	Hitachi	HD74LS299	
	Motorola	SN74LS299	
	SGS	T74LS299	
	TI	**SN74LS299**	**1016**
74LS30	Hitachi	HD74LS30	
	Motorola	SN74LS30	
	National	DM74LS30	
	SGS	T74LS30	
	Signetics	74LS30	
	TI	**SN74LS30**	**929**
74LS32	Hitachi	HD74LS32	
	Motorola	SN54LS32	
		SN74LS32	
	National	DM74LS32	
	SGS	T74LS32	
	Signetics	74LS32	
	TI	**SN74LS32**	**930**
74LS322	AMD	SN74LS322	
	Motorola	SN74LS322	
	TI	**SN74LS322A**	**1018**
74LS323	AMD	SN74LS323	
	Motorola	SN74LS323	
	TI	**SN54LS323**	**1018**
		SN74LS323	**1018**
74LS33	Motorola	SN74LS33	
	Signetics	74LS33	
	TI	**SN74LS33**	**930**

Manufacturer Device	Replacement Source	Device	IC Master Page
74LS352	Motorola	SN74LS352	
	National	DM74LS352	
	SGS	T74LS352	
	TI	**SN74LS352**	**1020**
74LS353	Motorola	SN74LS353	
	National	DM74LS353	
	SGS	T74LS353	
	TI	**SN74LS353**	**1021,1022**
74LS365A	Motorola	SN74LS365A	
	National	DM74LS365	
	SGS	T74LS365A	
	Signetics	74LS365	
		74LS365A	
	TI	**SN74LS365A**	**1023**
74LS366A	Motorola	SN74LS366A	
	National	DM74LS366	
	SGS	T74LS366A	
	Signetics	74LS366A	
	TI	**SN74LS366A**	**1023**
74LS367A	Hitachi	HD74LS367	
		HD74LS367A	
	Motorola	SN74LS367A	
	National	DM74LS367	
	SGS	T74LS367A	
	Signetics	74LS367	
		74LS367A	
	TI	**SN74LS367A**	**1024**
74LS368A	Hitachi	HD74LS368	
	Motorola	SN74LS368A	
	National	DM74LS368	
	SGS	T74LS368	
	Signetics	74LS368	
		74LS368A	
	TI	**SN74LS368A**	**1024**
74LS37	Hitachi	HD74LS37	
	Motorola	SN74LS37	
	National	DM74LS37	
	SGS	T74LS37	
	Signetics	74LS37	
	TI	**SN74LS37**	**932**
74LS373	**MMI**	**SN74LS373**	**804**
	Motorola	SN74LS373	
	~~SGS~~	~~T74LS373~~	
	Signetics	74LS373	
	TI	**SN74LS373**	**1025**
74LS374	**MMI**	**SN74LS374**	**804**
	Motorola	SN74LS374	
	National	DM74LS374	
	SGS	T74LS374	
	Signetics	74LS374	
	TI	**SN74LS374**	**1026**
74LS375	Motorola	SN74LS375	
	Signetics	74LS375	
	TI	**SN74LS375**	**1026**
74LS377	**AMD**	**AM25LS377**	**1427**
	MMI	**SN74LS377**	**804**
	Motorola	SN74LS377	
	SGS	T74LS377	
	Signetics	74LS377	
	TI	**SN74LS377**	**1027**
74LS378	AMD	SN74LS378	
	Motorola	SN74LS378	
	SGS	T74LS378	
	Signetics	74LS378	
	TI	**SN74LS378**	**1027**
74LS379	AMD	SN74LS379	
	Motorola	SN74LS379	
	SGS	T74LS379	
	TI	**SN74LS379**	**1028**
74LS38	Hitachi	HD74LS38	
	Motorola	SN74LS38	
	National	DM74LS38	
	SGS	T74LS38	
	Signetics	74LS38	
	TI	**SN74LS38**	**932**
74LS390	Motorola	SN74LS390	
	SGS	T74LS390	
	TI	**SN74LS390**	**1031**
74LS393	Motorola	SN74LS393	
	SGS	T74LS393	
	Signetics	74LS393	
	TI	**SN74LS393**	**1031**
74LS395	Motorola	SN74LS395	
	National	DM74LS395	
	SGS	T74LS395	
	Signetics	74LS395	
	TI	**SN74LS395A**	**1031**
74LS40	Hitachi	HD74LS40	
	Motorola	SN74LS40	
	National	DM74LS40	
	SGS	T74LS40	
		(Continued)	

◆ Discontinued

The manufacturers report their devices can be used as direct replacements.
Performance details often differ, so compare the specifications considering your requirements.

Fairchild (Cont'd)

Manufacturer Device	Replacement Source	Device	IC Master Page
74LS40	Signetics	74LS40	
	TI	**SN74LS40**	**933**
74LS42	Hitachi	HD74LS42	
	Motorola	SN74LS42	
	National	DM74LS42	
	SGS	T74LS42	
	Signetics	74LS42	
	TI	**SN74LS42**	**933**
74LS47	Hitachi	HD74LS47	
	Motorola	SN74LS47	
	National	DM74LS47	
	SGS	T74LS47	
	TI	**SN74LS47**	**935**
74LS48	Hitachi	HD74LS48	
	Motorola	SN74LS48	
	National	DM74LS48	
	SGS	T74LS48	
	Signetics	74LS48	
	TI	**SN74LS48**	**935**
74LS49	Hitachi	HD74LS49	
	Motorola	SN74LS49	
	National	DM74LS49	
	SGS	T74LS49	
	TI	**SN74LS49**	**935**
74LS490	Motorola	SN74LS490	
	SGS	T74LS490	
	Signetics	74LS490	
	TI	**SN74LS490**	**1043**
74LS51	Hitachi	HD74LS51	
	Motorola	SN74LS51	
	National	DM74LS51	
	SGS	T74LS51	
	Signetics	74LS51	
	TI	**SN74LS51**	**936**
74LS533	AMD	SN74LS533	
74LS534	AMD	AM74LS534	
		SN74LS534	
	MMI	**SN74LS534**	**804**
74LS54	Hitachi	HD74LS54	
	Motorola	SN74LS54	
	National	DM74LS54	
	SGS	T74LS54	
	Signetics	74LS54	
	TI	**SN74LS54**	**938**
74LS540	Motorola	SN74LS540	
	Signetics	74LS540	
	TI	**SN74LS540**	**1050**
74LS541	Motorola	SN74LS541	
	Signetics	74LS541	
	TI	**SN74LS541**	**1050**
74LS55	Hitachi	HD74LS55	
	Motorola	SN74LS55	
	National	DM74LS55	
	SGS	T74LS55	
	TI	**SN74LS55**	**939**
74LS670	Motorola	SN74LS670	
	National	DM74LS670	
	SGS	T74LS670	
	Signetics	74LS670	
	TI	**SN74LS670**	**1080**
74LS74	Hitachi	HD74LS74	
		HD74LS74A	
	Motorola	SN74LS74A	
	National	DM74LS74	
	SGS	T74LS74	
	Signetics	74LS74	
	TI	**SN74LS74A**	**945,946**
74LS83A	Hitachi	HD74LS183A	
		HD74LS83A	
	Motorola	SN74LS83A	
	National	DM74LS83A	
	Signetics	74LS83	
		74LS83A	
	TI	**SN74LS83A**	**949**
74LS85	Hitachi	HD74LS85	
	Motorola	SN74LS85	
	National	DM74LS85	
	Signetics	74LS85	
	TI	**SN74LS85**	**950**
74LS86	Hitachi	HD74LS86	
	Motorola	SN74LS86	
	National	DM74LS86	
	SGS	T74LS86	
	Signetics	74LS86	
	TI	**SN74LS86**	**950**
74LS90	Motorola	SN74LS90	
	National	DM74LS90	
	SGS	T74LS90	
		(Continued)	

Manufacturer Device	Replacement Source	Device	IC Master Page
74LS90	Signetics	74LS90	
	TI	**SN74LS90**	**952**
74LS92	Hitachi	HD74LS92	
	Motorola	SN74LS92	
	National	DM74LS92	
	SGS	T74LS92	
	Signetics	74LS92	
	TI	**SN74LS92**	**952**
74LS93	Hitachi	HD74LS93	
	Motorola	SN74LS93	
	National	DM74LS93	
	SGS	T74LS93	
	Signetics	74LS93	
	TI	**SN74LS93**	**953**
74LS95B	Hitachi	HD74LS95B	
	Motorola	SN74LS95B	
	National	DM74LS95B	
	SGS	T74LS95B	
	Signetics	74LS95B	
	TI	**SN74LS95B**	**954**
74S00	Hitachi	HD74S00	
	National	DM74S00	
	Signetics	74S00	
	TI	**SN74S00**	**920**
74S02	Hitachi	HD74S02	
	National	DM74S02	
	Signetics	74S02	
	TI	**SN74S02**	**920**
		SN74S32	**930**
74S03	Hitachi	HD74S03	
	National	DM74S03	
	Signetics	74S03	
	TI	**SN74S03**	**921**
74S04	Hitachi	HD74S04	
	National	DM74S04	
	Signetics	74S04	
	TI	**SN74S04**	**921**
74S05	Hitachi	HD74S05	
	National	DM74S05	
	Signetics	74S05	
	TI	**SN74S05**	**921**
74S08	Signetics	74S08	
	TI	**SN74S08**	**922**
74S10	Hitachi	HD74S10	
	National	DM74S10	
	Signetics	74S10	
	TI	**SN74S10**	**923**
74S109	TI	SN74S109	
74S11	Hitachi	HD74S11	
	National	DM74S11	
	Signetics	74S11	
	TI	**SN74S11**	**923**
74S112	Hitachi	HD74S112	
	Motorola	SN74S112	
	National	DM74S112	
	Signetics	74S112	
	TI	**SN74S112**	**959**
74S113	Hitachi	HD74S113	
	National	DM74S113	
	Signetics	74S113	
	TI	**SN74S113**	**959**
74S132	**TI**	**SN74S132**	**965**
74S133	Hitachi	HD74S133	
	National	DM74S133	
	Signetics	74S133	
	TI	**SN74S133**	**965**
74S135	Hitachi	HD74S135	
	National	DM74S135	
	Signetics	74S135	
	TI	**SN74S135**	**966**
74S138	AMD	SN74S138	
	National	DM74S138	
	Signetics	74S138	
	TI	**SN74S138**	**968**
74S139	AMD	SN74S139	
	National	DM74S139	
	Signetics	74S139	
	TI	**SN74S139**	**968**
74S140	Hitachi	HD74S140	
	National	DM74S140	
	Signetics	74S140	
	TI	**SN74S140**	**969**
74S15	Hitachi	HD74S15	
	National	DM74S15	
	TI	**SN74S15**	**925**
74S151	AMD	SN74S151	
	Hitachi	HD74S151	
	National	DM74S151	
	Signetics	74S151	
	TI	**SN74S151**	**972**
74S153	AMD	SN74S153	
	Hitachi	HD74S153	
		(Continued)	

Manufacturer Device	Replacement Source	Device	IC Master Page
74S153	National	DM74S153	
	Signetics	74S153	
	TI	**SN74S153**	**972**
74S157	AMD	SN74S157	
	Hitachi	HD74S157	
	National	DM74S157	
	Signetics	74S157	
	TI	**SN74S157**	**975**
74S158	AMD	SN74S158	
	Hitachi	HD74S158	
	National	DM74S158	
	Signetics	74S158	
	TI	**SN74S158**	**975**
74S174	AMD	SN74S174	
	Hitachi	HD74S174	
	National	DM74S174	
	Signetics	74S174	
	TI	**SN74S174**	**983**
74S175	AMD	SN74S175	
	Hitachi	HD74S175	
	National	DM74S175	
	Signetics	74S175	
	TI	SN74S175	
74S182	Hitachi	HD74S182	
	MMI	**SN74S182**	**819**
	National	DM74S182	
	Signetics	74S182	
	TI	**SN74S182**	**986**
74S189	AMD	AM27LS03	
		AM27S03	
		SN74S189	
	Fairchild	93405	
	Hitachi	HD74S189	
	National	DM74S189	
		DM7599	
		DM8599	
	Signetics	74S189	
	TI	SN74S189	
74S194	AMD	SN74S194	
	Signetics	74S194	
	TI	**SN74S194**	**990**
74S195	AMD	SN74S195	
	Fairchild	93S00C	
	National	DM74S195	
	Signetics	74S195	
	TI	**SN74S195**	**991**
74S20	Hitachi	HD74S20	
	National	DM74S20	
	Signetics	74S20	
	TI	**SN74S20**	**926**
74S22	Hitachi	HD74S22	
	National	DM74S22	
	TI	**SN74S22**	**927**
74S253	AMD	SN74S253	
	National	DM74S253	
	Signetics	74S253	
74S257	AMD	SN74S257	
	Hitachi	HD74S257	
	National	DM7123	
		DM74S257	
		DM8123	
	Signetics	74S257	
	TI	**SN74S257**	**1004**
74S258	AMD	SN74S258	
	Hitachi	HD74S258	
	Signetics	74S258	
	TI	**SN74S258**	**1005**
74S289	AMD	31L01	
		AM27LS02	
		AM27S02	
		AM3101	
		AM3101A	
		SN7489-1	
	Intel	3101	
	Motorola	MC4064	
	National	DM7589	
	NEC	μPB2089	
		μPB2289	
	Signetics	3101	
		3101A	
		7489	
		N8225	
		S3101	
	TI	**SN7489**	**951**
74S30	National	DM74S30	
	TI	**SN74S30**	**929**
74S32	Signetics	74S32	
74S40	Hitachi	HD74S40	
	National	DM74S40	
	Signetics	74S40	
	TI	**SN74S40**	**933**

Manufacturer Device	Replacement Source	Device	IC Master Page
74S51	Hitachi	HD74S51	
	National	DM74S51	
	Signetics	74S51	
	TI	**SN74S51**	**936**
74S65	Hitachi	HD74S65	
	National	DM74S65	
	TI	SN74S65	
74S74	Hitachi	HD74S74	
	National	DM74S74	
	Signetics	74S74	
	TI	SN74S74	
74S86	Hitachi	HD74S86	
	National	DM74S86	
	Signetics	74S86	
	TI	**SN74S86**	**950**
75107	Motorola	MC75107	
	National	DS75107	
		LM75107A	
	TI	SN75107	
		SN75107B	
75108	Motorola	MC75108	
	National	DS75108	
		LM75108A	
	TI	SN75108	
		SN75108B	
75110	Hitachi	HD75110	
	Motorola	MC75110	
	National	LM75110	
	TI	SN75110	
		SN75110A	
75150	National	DS75150	
	TI	SN75150	
75154	Hitachi	HD75154	
	National	DS75154	
	SiliconG	SG75154	
	TI	SN75154	
7520	Motorola	MC7520	
	SiliconG	SG7520	
	TI	SN7520	
7521	Motorola	MC7521	
	National	LM7521	
	SiliconG	SG7521	
	TI	SN7521	
7525	AMD	7525	
	Motorola	MC7525	
	National	LM7525	
	SiliconG	SG7525	
7529	Motorola	MC7529	
	National	LM7529	
	Raytheon	RC7529	
	SiliconG	SG7529	
7538	Motorola	MC7538	
	National	LM7538	
	SiliconG	SG7538	
7539	Motorola	MC7539	
	National	LM7539	
	SiliconG	SG7539	
75430	TI	SN75430	
75450	Motorola	MC75450	
	National	DS75450	
	SiliconG	SG75450	
	TI	SN75450	
75451	Motorola	MC75451	
	National	DS75451	
	SiliconG	SG75451	
	TI	SN75451	
75452	Hitachi	HD75452	
	Motorola	MC75452	
	National	DS75452	
	SiliconG	SG75452	
	TI	SN75452	
75453	Hitachi	HD75453	
	Motorola	MC75453	
	National	DS75453	
		LM75453	
	SiliconG	SG75453	
	TI	SN75453	
75461	Motorola	MC75401	
		MC75461	
	National	DS75461	
	SiliconG	SG75461	
	TI	SN75461	
75462	Motorola	MC75402	
		MC75462	
	National	DS75462	
	SiliconG	SG75462	
	TI	SN75462	
75471	SiliconG	SG7541	
		SG75471	
	TI	SN75471	

◆ Discontinued

Bold face device numbers indicate manufacturers data is provided in the IC Master on the pages noted.

Fairchild (Cont'd)

Manufacturer Device	Replacement Source	Device	IC Master Page
75472	SiliconG	SG7542	
		SG75472	
	TI	SN75472	
75491	Motorola	MC75491	
	National	DS75491	
	TI	SN75491	
75492	Motorola	MC75492	
	National	DS75492	
	TI	SN75492	
75S234	TI	SN75234	
75S24	Hitachi	HA1902	
	Motorola	MC7524	
	National	DS75S24	
	Signetics	7524	
	SiliconG	SG7524	
	TI	SN75224	
		SN7524	
9001	Fairchild	74H105	
	TI	SN29001	
		SN39001	
9004	Fairchild	7420	
	Hitachi	HD7420	
	National	DM7420	
		DM9004C	
	Signetics	**7420**	**860**
	TI	**SN7420**	**926**
	Toshiba	TC7420	
9016	Fairchild	5404	
	National	DM5404	
		DM9016C	
	TI	**SN5404**	**921**
9031	Fairchild	9301	
	National	DM8301	
		DM9301	
	Raytheon	RC8252	
		RM8252	
	Signetics	N8252	
		S8252	
	TI	SN29301	
		SN39301	
9093	Motorola	MC853	
		MC953	
	National	DM9093	
	Raytheon	RM993	
	TI	SN158093	
		SN159093	
9094	Motorola	MC856	
		MC956	
	National	DM9094	
	Raytheon	RM9094	
		RM994	
	TI	SN158094	
		SN159094	
9097	Motorola	MC855	
		MC955	
	National	DM9097	
	Raytheon	RM997	
	TI	SN158097	
		SN159097	
9099	Motorola	MC952	
	Raytheon	RM952	
		RM999	
9135	Fairchild	9935	
	Motorola	MC835	
		MC935	
	National	DM935	
9157	Motorola	MC857	
		MC957	
	National	DM9567	
		DM957	
	Raytheon	RM957	
9158	Motorola	MC858	
		MC958	
	National	DM958	
	Raytheon	RM958	
930	Fairchild	9930	
	Motorola	**MC830**	
		MC930	
	National	DM930	
	Raytheon	RM930	
9300	Fairchild	54195	
	National	DM54195	
	TI	**SN54195**	**991**
9301	Fairchild	9031	
	National	DM8301	
		DM9301	
	Raytheon	RC8252	
		RM8252	
	Signetics	N8252	
		S8252	

(Continued)

Manufacturer Device	Replacement Source	Device	IC Master Page
9301	TI	SN29301	
		SN39301	
9304	Raytheon	RC9304	
		RM9304	
9308	Raytheon	RC9308	
	TI	SN29308	
		SN74116	**960**
9309	National	DM8309	
		DM9309	
	TI	SN29309	
		SN39309	
9310	Fairchild	54160	
	National	DM54160	
	Raytheon	RM9310	
	Signetics	**54160**	**861**
	TI	**SN54160**	**977**
9311	Hitachi	HD74154	
	National	DM7213	
		DM74154	
		DM8311	
	Raytheon	RC9311	
	Signetics	**74154**	**861**
	TI	SN29311	
		SN74154	**973**
9312	National	DM8312	
	Raytheon	RC8230	
		RC9312	
	Signetics	N8230	
	TI	SN29312	
93141	Fairchild	74141	
	Hitachi	HD74141	
		HD7441	
	National	DM74141	
		DM7441	
	Signetics	74141	
		7441	
	TI	SN74141	
9315	National	DM54141	
	Signetics	54141	
	TI	SN54141	
9316	Raytheon	RC9316	
	TI	SN29316	
9317B	Fairchild	5446A	
		9317C	
	National	DM5446	
	Signetics	5446	
	TI	SN5446	
		SN5446A	**935**
9317C	Fairchild	5446A	
		9317B	
	National	DM5446	
	Signetics	5446	
	TI	SN5446	
		SN5446A	**935**
9318	Hitachi	HD74148	
	National	DM74148	
		DM8318	
	Signetics	**74148**	**861**
		N82148	
	TI	**SN74148**	**971**
932	Fairchild	9932	
	Motorola	**MC932**	
	National	**DM932**	
	Raytheon	**RM932**	
9328	Raytheon	RC8277	
	Signetics	N8277	
933	Fairchild	9933	
	Motorola	MC933	
	National	DM933	
9334	National	DM8334	
	TI	SN29334	
		SN74259	**1005**
93405	AMD	AM27LS03	
		AM27S03	
		SN74S189	
	Fairchild	74S189	
	Hitachi	HD74S189	
	National	DM74S189	
		DM7599	
		DM8599	
	Signetics	74S189	
	TI	SN74S189	
9341	Hitachi	HD74181	
	National	DM74181	
	Raytheon	RC9341	
	Signetics	**74181**	**861**
	TI	**SN74181**	**985**
93411	AMD	AM27LS01	
		AM29720	
	Fairchild	93L411	
	Intel	3107	
	National	DM74S206	

(Continued)

Manufacturer Device	Replacement Source	Device	IC Master Page
93411	National	N82S117	
		N82S17	
	Signetics	74S301	
		N82S17	
	TI	SN74206	
		SN74S301	**1016**
93412	AMD	AM93412	
93415	AMD	AM93415	
	AMI	4015	
	Fujitsu	MBM93415	
	Hitachi	HM2510	
		HM2511	
	Intel	2115A	
	Motorola	MCM2115	
	Signetics	N82S10	
		S82S10	
	TI	SN54S314	
		SN74S314	
93417	AMD	AM27S20	
	Harris	HM7610	
	MMI	6300-1	
		63S140	**4026**
	National	**DM74S387**	**4057**
	Signetics	N82S126	
	TI	**TBP24SA10**	
			542,4238
934183	Fairchild	54H183	
	TI	**SN54H183**	**986**
93419	Signetics	N82S09	
		S82S09	**532**
9342	Hitachi	HD74182	
	National	DM74182	
	TI	**SN74182**	**986**
93421	AMD	AM27LS00	
	Fairchild	93L420	
		93L421	
	Intel	3106	
	Motorola	MC4256	
	National	93L420	
		93L421	
		DM74S200	
	NEC	μPB2200	
	Signetics	74200	
		N82S116	
		N82S16	
	TI	SN74LS200	
		SN74S200	
		SN74S201	**993**
93422	AMD	AM93422	
	Motorola	**MCM93422**	**4046**
93425A	AMD	AM93425	
	AMI	4025	
93436	AMD	AM27S12	
	Harris	HM7620	
	MMI	6305-1	
		63S240	**4026**
	National	**DM74S570**	**4057**
	Signetics	N82S130	
93438	AMD	AM27S30	
	Harris	HM7640	
	MMI	6340-1	
	National	**DM74S475**	**4057**
		DM77S475	
		DM87S475	
	Signetics	N82S140	
	TI	**TBP28SA46**	**4245**
93446	AMD	AM27S13	
	Harris	HM7621	
	Intel	3622	
	MMI	6306-1	
		63S241	**4026**
	Motorola	**MCM7621**	**4047**
	National	**DM74S571**	**4057**
	Raytheon	**29611**	**4131**
	Signetics	N82S131	
	TI	SN74S571	
93448	AMD	AM27S31	
	Fujitsu	MB7126	
	Harris	HM7641	
	MMI	6341-1	
	Motorola	**MCM7641**	**4047**
	National	**DM74S474**	**4057**
	Signetics	N82S141	
	TI	**TBP28S46**	
			542,543,4245
93450	AMD	AM27S180	
		AM27S280	
	Fairchild	93Z450	
	Fujitsu	MB7131	
	Hitachi	HN25088	
	Intel	3608	
	MMI	6380-1	

(Continued)

Manufacturer Device	Replacement Source	Device	IC Master Page
93450	**National**	**DM87S180**	**4057**
		DM87S229	
	NEC	μPB408	
	Signetics	N82S180	
	TI	TBP28SA86	
93451M	**AMD**	**AM27S181M**	**3905**
	Fujitsu	MB7132-W	
		MB7132E-W	
	Harris	**HM7681-2**	**3949**
	MMI	5381-1	
	National	**DM77S181**	**4057**
	Raytheon	29631AM	
	Signetics	S82HS181	
		S82S181	**532**
	TI	TBP28S86M	
93452	AMD	AM27S32	
	Fujitsu	MB7121	
	Harris	HM7642	
	Hitachi	HN25044	
	MMI	6352-1	
	Motorola	MCM7642	
	National	**DM74S572**	**4057**
	NEC	μPB406	
	Signetics	N82S136	
	TI	**TBP24SA41**	**4239**
93453C	AMD	AM27S33	
	Fujitsu	MB7122	
	Harris	HM7643	
		HM7643A	
	MMI	5353-1	
		6353-1	
	Motorola	**MCM7643**	**4047**
	National	**DM74S573**	**4057**
	Signetics	N72HS137	
		N82S137	**4172**
		S82S195	**4182**
	TI	**TBP24S41**	
			542,4239
93453M	AMD	AM27S33M	
		AM27S41	**3907**
	Fujitsu	MB7122E-W	
		MB7152E-W	
	Harris	**HM7643-2**	**3948**
	MMI	**53S441**	**4026**
	Motorola	MCM7643M	
	National	**DM54S573**	**4057**
		DM54S573A	**4057**
	Signetics	S82HS137	
		S82S137	**532**
		S82S195	**4182**
	TI	**TBP24S41M**	
			542,4239
93458	**Signetics**	**N82S101**	**4153**
		S82S101	**532,4153**
93459	**Signetics**	**N82S100**	**4153**
		S82S100	**532,4153**
93475	AMD	AM2148	
	Fujitsu	MBM2148	
		MBM2149	
	Hitachi	HM6148	
	Intel	2148H	
		2149H	
	National	NMC2148	
	Synertek	SY2148	
		SY2149	
93479	Signetics	N82S212	
		S82S212	**532**
93510	AMD	AM27S190	
	Fairchild	93Z510	
	Fujitsu	MB7137	
		MB7137E-W	
	Harris	HM76160	
	Hitachi	HN25168	
	MMI	**63S1681**	**4026**
	Motorola	MCM6160	
	National	**DM87S190**	**4057**
	NEC	μPB409	
	Raytheon	**29683**	**4131**
	Signetics	N82S190	
	TI	TBP28SA166	
93511	AMD	AM27PS191	
		AM27S191	
	Fairchild	93Z511	
	Fujitsu	MB7138	
		MB7138E-W	
	Harris	HM76161	
	Hitachi	HN25169	
	MMI	**63S1681**	**4026**
	Motorola	**MCM76161**	**4047**
	National	**DM87S191**	**4057**
	NEC	μPB429	
	Raytheon	**29681**	**4131**

(Continued)

◆ Discontinued

The manufacturers report their devices can be used as direct replacements.
Performance details often differ, so compare the specifications considering your requirements.

Fairchild (Cont'd)

Manufacturer Device	Replacement Source	Device	IC Master Page
93511	**Raytheon**	**29681A**	**4131**
	Signetics	N82S191	
	TI	**TBP28S166**	**4247**
93513	**Motorola**	**MCM76165**	**4047**
936	Fairchild	9936	
	Motorola	MC936	
	National	DM936	
9360	Fairchild	74192	
	National	DM74192	
		DM8560	
	Raytheon	RC9360	
	Signetics	**74192**	**861**
	TI	**SN74192**	**990**
9368	Mitel	MD4368	
937	Fairchild	9937	
	Motorola	MC837	
		MC937	
	National	DM937	
9374	Signetics	N8T74	
9386	Fairchild	54LS266	
	Motorola	SN54LS266	
	National	DM54LS266	
	Signetics	**54LS266**	**530**
	TI	**SN54LS266**	**1007**
939	National	DM939	
	Raytheon	RM939	
93L411	AMD	AM27LS01	
		AM29720	
	Fairchild	93411	
	Intel	3107	
	National	DM74S206	
		N82S117	
		N82S17	
	Signetics	74S301	
		N82S17	
	TI	SN74206	
		SN74S301	**1016**
93L420	AMD	AM27LS00	
	Fairchild	93421	
		93L421	
	Intel	3106	
	Motorola	MC4256	
	National	93L420	
		93L421	
		DM74S200	
	NEC	μPB2200	
	Signetics	74200	
		N82S116	
		N82S16	
	TI	SN74LS200	
		SN74S200	
		SN74S201	**993**
93L421	AMD	AM27LS00	
	Fairchild	93421	
		93L420	
	Intel	3106	
	Motorola	MC4256	
	National	93L420	
		93L421	
		DM74S200	
	NEC	μPB2200	
	Signetics	74200	
		N82S116	
		N82S16	
	TI	SN74LS200	
		SN74S200	
		SN74S201	**993**
93L422	AMD	AM93L422	
	Motorola	**MCM93L422**	**4046**
93L451	Signetics	N82LS181	
		S82LS181	
	TI	**TBP28L86**	
		542,543,4242	
93S00C	AMD	SN74S195	
	Fairchild	74S195	
	National	DM74S195	
	Signetics	74S195	
	TI	**SN74S195**	**991**
93S00M	AMD	SN54S195	
	Fairchild	54S195	
93S10	**AMD**	**SN74S160**	**1427**
	National	DM54LS160	
	Signetics	54LS160	
~~93S12~~	~~Signetics~~	~~S82S30~~	
93S411	AMD	SN54S175	
	Fairchild	54S175	
	TI	**SN54S175**	**983**
93S41C	AMD	SN74S181	
	Hitachi	HD74S181	
		(Continued)	

Manufacturer Device	Replacement Source	Device	IC Master Page
93S41C	Signetics	74S181	
	TI	**SN74S181**	**985**
93S41M	AMD	SN54S181	
	Signetics	**54S181**	**531**
	TI	**SN54S181**	**985**
93S42	Fairchild	54S182	
	MMI	**SN54S182**	**819**
	TI	**SN54S182**	**986**
93S46	Fairchild	93S47	
	National	DM7160	
		DM8160	
93S47	Fairchild	93S46	
	National	DM7160	
		DM8160	
93S62	Signetics	S82S62	
93Z450	AMD	AM27S180	
		AM27S280	
	Fairchild	93450	
	Fujitsu	MB7131	
	Hitachi	HN25088	
	Intel	3608	
	MMI	6380-1	
	National	**DM87S180**	**4057**
		DM87S229	
	NEC	μPB408	
	Signetics	N82S180	
	TI	TBP28SA86	
93Z451	AMD	AM27PS181	
		AM27S181	
		AM27S281	
	Fairchild	F93451	
	Fujitsu	MB7132	
	Harris	HM7681	
	Hitachi	HN25089	
	Intel	3628	
		3628A	
		3628B	
	MMI	**6381-1**	
	Motorola	**MCM7681**	**4047**
	National	**DM87S181**	**4057**
		DM87S228	
	NEC	μPB417	
	Raytheon	29631	
		29631A	**4131**
		29633	
	Signetics	825181	
		N82HS181	
		N82S181	
	Supertex	SM82S181	
	TI	TBP28S86	
93Z510	AMD	AM27S190	
	Fairchild	93510	
	Fujitsu	MB7137	
		MB7137E-W	
	Harris	HM76160	
	Hitachi	HN25168	
	MMI	**63S1681**	**4026**
	Motorola	MCM6160	
	National	**DM87S190**	**4057**
	NEC	μPB409	
	Raytheon	**29683**	**4131**
	Signetics	N82S190	
	TI	TBP28SA166	
93Z511	AMD	AM27PS191	
		AM27S191	
	Fairchild	93511	
	Fujitsu	MB7138	
		MB7138E-W	
	Harris	HM76161	
	Hitachi	HN25169	
	MMI	**63S1681**	**4026**
	Motorola	**MCM76161**	**4047**
	National	**DM87S191**	**4057**
	NEC	μPB429	
	Raytheon	**29681**	**4131**
		29681A	**4131**
	Signetics	N82S191	
	TI	**TBP28S166**	**4247**
93Z565	AMD	AM27S49	
9401	Fairchild	F9401	
	Motorola	MC8503	
	Signetics	9401	
9403	Fairchild	F9403	
	~~Signetics~~	~~9403~~	
944	Fairchild	9944	
	Motorola	MC944	
	National	DM944	
945	Fairchild	9945	
	Motorola	MC945	
	National	DM945	

Manufacturer Device	Replacement Source	Device	IC Master Page
946	Fairchild	9946	
	Motorola	MC946	
	National	DM946	
948	Fairchild	9948	
	Motorola	MC948	
	National	DM948	
949	Motorola	MC949	
	National	DM949	
	Raytheon	RM949	
950	Fairchild	9950	
	Motorola	MC950	
951	Fairchild	9951	
	Motorola	MC851	
		MC852	
		MC951	
	Raytheon	RM951	
	TI	SN15851	
		SN15951	
95H90	Plessey	SP8640	
		SP8647	
9601	Fairchild	74122	
	National	DM8601	
		DM9601	
	Raytheon	RF8601	
		RF9601	
	Signetics	**N8T22**	**876**
		S8T22	
	TI	**SN74122**	**961**
9602	National	DM8602	
		DM9602	
	Raytheon	RF8602	
		RF9602	
	TI	SN39602	
9603	Fairchild	54121	
	National	DM54121	
	Signetics	**54121**	**528,860**
	TI	**SN54121**	**961**
961	Fairchild	9961	
	Motorola	MC961	
	National	DM961	
96114	Fairchild	9614	
	TI	SN55114	
		SN75114	
96115	Fairchild	9615	
	TI	9615	
		SN55115	
		SN75115	
9614	Fairchild	96114	
	TI	SN55114	
		SN75114	
9615	Fairchild	96115	
	TI	9615	
		SN55115	
		SN75115	
96176	Fairchild	74176	
	National	DM74176	
		DM8280	
	Raytheon	RC8280	
	Signetics	74176	
		N8280	
	TI	**SN74176**	**984**
962	Fairchild	9962	
	Motorola	MC962	
	National	DM962	
9627	TI	SN75152	
963	Fairchild	9963	
	Motorola	MC963	
	National	DM963	
	Raytheon	RM963	
9636A	Motorola	MC3488	
	TI	9636	
		9636A	
9637A	TI	9637	
		9637A	
9640	AMD	AM26S10	
	Motorola	DC26S10	
	National	DS26S10	
	TI	AM26S10	
9643	TI	9643	
9665	Exar	XR2001	
		XR2201	
	Motorola	**MC1411**	**3064**
		ULN2001	
		XR2201	
	NEC	μPA2001	
	RIFA	PBD352301	
	Sanyo	LB1231	
	SGS	L201	
	SiliconG	SG2001	
	Sprague	ULN-2001	
		ULN-2021	
		ULQ-2002	
		(Continued)	

Manufacturer Device	Replacement Source	Device	IC Master Page
9665	Sprague	ULS-2001	
	TI	ULN2001	
	Toshiba	TD62001	
9666	Exar	XR2002	
		XR2202	
	Fairchild	MC1412	
	Motorola	**MC1412**	**3064**
		ULN2002	
	NEC	μPA2002	
	RIFA	PBD352304	
	Sanyo	LB1232	
	SGS	L202	
	Signetics	NE5602	
	Sprague	ULN-2002	
		ULQ-2003	
	TI	ULN2002	
	Toshiba	TD62002	
9667	Exar	XR2003	
		XR2004	
		XR2203	
	Fairchild	MC1413	
	Mitsubishi	M54523	
	Motorola	**MC1413**	**3064**
		ULN2003	
	Sanyo	LB1233	
	SGS	L203	
	Signetics	NE5603	
		ULN2003	
	SiliconG	SG2003	
	Sprague	ULN-2003	
		ULQ-2003	
		ULQ-2004	
		ULS-2003	
		ULS-2004	
	TI	ULN2003	
	Toshiba	TD62003	
9668	Exar	XR2204	
	Mitsubishi	M54526	
	Motorola	**MC1416**	**3064**
		ULN2004	
	Sanyo	LB1234	
	SGS	L204	
	Signetics	NE5604	
		ULN2004	
	SiliconG	SG2004	
	Sprague	ULN-2004	
		ULS2004	
	TI	ULN2004	
	Toshiba	TD62004	
97L412	AMD	AM93L412	
9930	Fairchild	930	
	Motorola	MC830	
		MC930	
	National	DM930	
	Raytheon	RM930	
9932	Fairchild	932	
	Motorola	MC932	
	National	DM932	
	Raytheon	RM932	
9933	Fairchild	933	
	Motorola	MC933	
	National	DM933	
9935	Fairchild	9135	
	Motorola	MC835	
		MC935	
	National	DM935	
9936	Fairchild	936	
	Motorola	MC936	
	National	DM936	
9937	Fairchild	937	
	Motorola	MC837	
		MC937	
	National	DM937	
9941	Motorola	MC941	
	Raytheon	RM941	
9944	Fairchild	944	
	Motorola	MC944	
	National	DM944	
9945	Fairchild	945	
	Motorola	MC945	
	National	DM945	
9946	Fairchild	946	
	Motorola	MC946	
	National	DM946	
~~9948~~	~~Fairchild~~	~~948~~	
	~~Motorola~~	~~MC948~~	
	National	DM948	
9950	Fairchild	950	
	Motorola	MC950	
9951	Fairchild	951	
	Motorola	MC851	
		MC852	
		(Continued)	

◆ Discontinued

Bold face device numbers indicate manufacturers data is provided in the IC Master on the pages noted.

Fairchild (Cont'd)

Manufacturer Device	Replacement Source	Device	IC Master Page
9951	Motorola	MC951	
	Raytheon	RM951	
	TI	SN15851	
		SN15951	
9961	Fairchild	961	
	Motorola	MC961	
	National	DM961	
9962	Fairchild	962	
	Motorola	MC962	
	National	DM962	
9963	Fairchild	963	
	Motorola	MC963	
	National	DM963	
	Raytheon	RM963	
DAC-08	AMD	AM1408	
		SSS1408	
	AD	AD1408	
		ADDAC-08	
	Datel	DAC-08B	
		DAC-I8BC	
		DAC-IC8B	
		DAC-IC8BC	**2863**
	Fairchild	MA0802M	
		μA0801	
		μA0802	
	Motorola	**DAC-08**	**3069**
		MC1408	
	National	DAC0800	
		DAC0801	
		DAC0802	
		DAC0806	
		DAC0807	
		DAC0808	
	NEC	μPC624	
	PMI	DAC-08	
		DAC-1408	
	Raytheon	**DAC-08**	**3591**
	Signetics	MC1408	
F100101	**Signetics**	**100101**	**858**
F100102	**Signetics**	**100102**	**858**
F100107	**Signetics**	**100107**	**858**
F100114	**Signetics**	**100114**	**858**
F100117	**Signetics**	**100117**	**858**
F100118	**Signetics**	**100118**	**858**
F100122	**Signetics**	**100122**	**858**
F100155	**Signetics**	**100155**	**858**
F100158	**Signetics**	**100158**	**858**
F100160	**Signetics**	**100160**	**858**
F100163	**Signetics**	**100163**	**858**
F100166	**Signetics**	**100166**	**858**
F100171	**Signetics**	**100171**	**858**
F100470	**AMD**	**AM100470**	**3914**
	Fujitsu	MBM100470	
F100474	**AMD**	**AM100474**	**3912**
	Hitachi	HM100474	
F10100	Motorola	MC10100	
	Signetics	**10100**	**858**
F10101	Hitachi	HD10101	
	Motorola	MC10101	
	Signetics	**10101**	**858**
F10102	Hitachi	HD10102	
	Motorola	MC10102	
	Signetics	**10102**	**858**
F10103	Motorola	MC10103	
	Signetics	**10103**	**858**
F10104	Hitachi	HD10104	
	Motorola	MC10104	
	Signetics	**10104**	**858**
F10105	Hitachi	HD10105	
	Motorola	MC10105	
	Signetics	**10105**	**858**
F10106	Hitachi	HD10106	
	Motorola	MC10106	
	Signetics	**10106**	**858**
F10107	Hitachi	HD10107	
	Motorola	**MC10107**	
	Signetics	**10107**	**858**
F10109	Hitachi	HD10109	
	Motorola	MC10109	
	Signetics	**10109**	**858**
F10110	Hitachi	HD10110	
	Motorola	MC10110	
	Signetics	**10110**	**858**
F10111	Hitachi	HD10111	
	Motorola	MC10111	
	Signetics	**10111**	**858**
F10113	Motorola	MC10113	
	Signetics	**10113**	**858**
F10114	Motorola	MC10114	
	Signetics	**10114**	**858**
F10115	Motorola	MC10115	
	Signetics	**10115**	**858**
F10116	Hitachi	HD10116	
	Motorola	MC10116	
	National	DM10116	
	Signetics	**10116**	**858**
F10117	Hitachi	HD10117	
	Motorola	MC10117	
	Signetics	**10117**	**858**
F10118	Hitachi	HD10118	
	Motorola	MC10118	
	Signetics	**10118**	**858**
F10119	Hitachi	HD10119	
	Motorola	MC10119	
	Signetics	**10119**	**858**
F10121	Hitachi	HD10121	
	Motorola	MC10121	
	Signetics	**10121**	**858**
F10123	Motorola	MC10123	
	Signetics	**10123**	**858**
F10124	Hitachi	HD10124	
	Motorola	MC10124	
	Signetics	**10124**	**858**
F10125	Hitachi	HD10125	
	Motorola	MC10125	
	Signetics	**10125**	**858**
F10130	Hitachi	HD10130	
	Motorola	MC10130	
	Signetics	**10130**	**858**
F10131	Hitachi	HD10131	
	Motorola	MC10131	
	Signetics	**10131**	**858**
F10132	Hitachi	HD10132	
	Motorola	MC10132	
	Signetics	**10132**	**858**
F10133	Hitachi	HD10133	
	Motorola	MC10133	
	Signetics	**10133**	**858**
F10134	Hitachi	HD10134	
	Motorola	MC10134	
	Signetics	**10134**	**858**
F10135	Motorola	MC10135	
	Signetics	**10135**	**858**
F10136	Hitachi	HD10136	
	Motorola	MC10136	
	Signetics	**10136**	**858**
F10137	Motorola	MC10137	
	Signetics	**10137**	**858**
F10141	Motorola	MC10141	
	Signetics	**10141**	**858**
F10144	**Motorola**	**MCM10144**	**4046**
	Signetics	10144	
	TI	SN10144	
F10145A	**Motorola**	**MCM10145**	**4046**
	Signetics	10145	
F10158	Motorola	MC10158	
	Signetics	**10158**	**858**
F10159	Motorola	MC10159	
	Signetics	**10159**	**858**
F10160	Hitachi	HD10160	
	Motorola	MC10160	
	Signetics	**10160**	**858**
F10161	Hitachi	HD10161	
	Motorola	MC10161	
	NEC	μPB10161	
	Signetics	**10161**	**858**
F10162	Hitachi	HD10162	
	Motorola	MC10162	
	Signetics	**10162**	**858**
F10164	Hitachi	HD10164	
	Motorola	MC10164	
	Signetics	**10164**	**858**
	TI	SN10164	
F10165	Hitachi	HD10165	
	Motorola	MC10165	
	Signetics	**10165**	**858**
F10168	Motorola	MC10168	
F10171	Motorola	MC10171	
	Signetics	**10171**	**858**
F10172	Motorola	MC10172	
	Signetics	**10172**	**858**
F10173	Motorola	MC10173	
	Signetics	**10173**	**858**
F10174	Hitachi	HD10174	
	Motorola	MC10174	
	Signetics	**10174**	**858**
	TI	SN10174	
F10175	Hitachi	HD10175	
	Motorola	MC10175	
	Signetics	**10175**	**858**
	TI	SN10175	
F10176	Motorola	MC10176	
	Signetics	**10176**	**858**
F10177	Motorola	MC10177	
F10178	Motorola	MC10178	
	Signetics	10178	
F10179	Hitachi	HD10179	
	Motorola	MC10179	
	Signetics	**10179**	**858**
F10180	Hitachi	HD10180	
	Motorola	MC10180	
	Signetics	**10180**	**858**
F10181	Hitachi	HD10181	
	Motorola	MC10181	
	Signetics	**10181**	**858**
F10186	Motorola	MC10186	
	Signetics	10186	
F10192	Motorola	MC10192	
	Signetics	**10192**	**858**
F10210	Motorola	MC10210	
	Signetics	**10210**	**858**
F10211	Motorola	MC10211	
	Signetics	**10211**	**858**
F10212	Motorola	MC10212	
	Signetics	10212	
F10216	Motorola	MC10216	
	Signetics	**10216**	**858**
F10231	Motorola	MC10231	
	Signetics	**10231**	**858**
F10402	**Motorola**	**MC10H145**	**821**
F10414	**Motorola**	**MCM10152**	**4046**
	National	DM10414	
F10415	**AMD**	**AM10415**	**3909**
	Fujitsu	MBM10415	
		MCM10415	
	Hitachi	HM2110	
		HM2112	
	Motorola	**MCM10146**	**4046**
	National	DM10415	
	Siemens	GXB10415	
	Signetics	10415	
F10416	**Motorola**	**MCM10149**	**4047**
	Signetics	**10149**	**858**
F10422	Fujitsu	MBM10422	
	Hitachi	HM10422	
	Motorola	**MCM10422**	**4047**
	National	DM10422	
	Signetics	10422	
F10470	AMD	AM10470	
	Fujitsu	MBM10470	
	Hitachi	HM10470	
		HM2142	
	Motorola	**MCM10470**	**4047**
	National	DM10470	
	Signetics	10470	
F10474	AMD	AM10474	
	Fujitsu	MBM10474	
	Signetics	10474	
F10501	Motorola	MC10501	
F10502	Motorola	MC10502	
F10503	Motorola	MC10503	
F10504	Motorola	MC10504	
F10505	Motorola	MC10505	
F10506	Motorola	MC10506	
F10507	Motorola	MC10507	
F10509	Motorola	MC10509	
F10513	Motorola	MC10513	
F10514	Motorola	MC10514	
F10515	Motorola	MC10515	
F10516	Motorola	MC10516	
F10524	Motorola	MC10524	
F10525	Motorola	MC10525	
F10530	Motorola	MC10530	
F10531	Motorola	MC10531	
F10535	Motorola	MC10535	
F10541	Motorola	MC10541	
F10558	Motorola	MC10558	
F10562	Motorola	MC10562	
F10564	Motorola	MC10564	
F10566	Motorola	MC10566	
F10574	Motorola	MC10574	
F10576	Motorola	MC10576	
F16008	National	NS16008	
F16016	National	NS16016	
F16032	**National**	**NS16032**	**1513**
F16081	**National**	**NS16081**	**1513**
F16082	**National**	**NS16082**	**1513**
F16105	National	NS16105	
F16201	**National**	**NS16201**	**1514**
F16202	**National**	**NS16202**	**1514**
F16203	**National**	**NS16203**	**1514**
F16413	**National**	**NS16413**	**1514**
F16425	**National**	**NS16425**	**1514**
F16456	**National**	**NS16456**	**1514**
F16488	**National**	**NS16488**	**1514**
F16802	National	NS16802	
F2114	AMD	AM9114	
	EMM-SESCO	2114	
	Hitachi	HM472114	
	Intel	2114	
		2114A	
	Intersil	IM2114	
	MicroPwr	MP2114	
	Motorola	MCM2114	
	National	MM2114	
	NEC	μPD2114	
	OKI	**MSM2114**	**4118**
	Panasonic	MN2114	
	SMOS	SRM2114	
	SSS	SCM21C14	
	~~Synertek~~	**SY2114**	**4210**
	TI	TMS4045	
	Toshiba	TMM314	
		TMM314A	
◆F2708	AMD	AM2708	
	Hitachi	HN462708	
	Motorola	MC27A08	
		MCM2708	
	National	MM2708	
	Panasonic	MN2708	
	Rockwell	2708	
	TI	TMS2708	
◆F2716	AMD	AM2716	
	Fujitsu	MB2716	
	Hitachi	HN462716	
	Intel	2716	
	Mostek	MK2716	
	Motorola	MCM2716	
	National	MM2716	
	NEC	μPD2716	
	OKI	**MSM2716**	**4118**
	Panasonic	MN2716	
	SGS	M2716	
	TI	TMS2516	
◆F2732	AMD	AM2732	
	Hitachi	HN462732	
	Intel	2732	
		2732A	
		M2732	
	Mitsubishi	M5L2732	
	National	MM2732	
		NMC2732	
	NEC	μPD2732	
	Toshiba	TMM2732	
		TMM324C	
	Universal	UM2732	
F2847	AMD	AM2847	
F2901A	**AMD**	**AM2901B**	**1401**
	Fairchild	29F01	
	National	IDM2901A	
F2903	Motorola	MC2903	
F2910	AMD	AM2910	
	Fairchild	29F10	
	Motorola	MC2910	
F3516	AMD	AM9218	
	Fairchild	3516	
		68316	
		F35316	
		F68316	**1464**
	GI	R03-9316	
	GTEMicro	2316	
	Intel	2316	
	Mostek	MK34000	
	Motorola	MCM68316	
		MCM68A316	
		MM2316	
	National	MM52116	
		MM5258	
	NCR	2316	
		NCR2316	
	NEC	μPD2316	
	OKI	**MSM2916**	**4118**
	Rockwell	R2316	
	SGS	M2316	
	TI	SBP8316	
	Toshiba	TMM331A	
		TMM334	
F3528	**AMD**	**AM9128**	**3917**
	Fujitsu	MB8128	
	Intel	2128	
	Motorola	MCM2016	
	National	NMC2116	
	OKI	**MSM5128**	**4118**
	Synertek	SY2128	
		SY2129	

(Continued)

◆ Discontinued

The manufacturers report their devices can be used as direct replacements.
Performance details often differ, so compare the specifications considering your requirements.

Fairchild (Cont'd)

Manufacturer Device	Replacement Source	Device	IC Master Page
F3528	TI	TMS4016	
	Toshiba	TMM2016	
F35316	AMD	AM9218	
	Fairchild	3516	
		68316	
		F3516	
		F68316	**1464**
	GI	R03-9316	
	GTEMicro	2316	
	Intel	2316	
	Mostek	MK34000	
	Motorola	MCM68316	
		MCM68A316	
		MM2316	
	National	MM52116	
		MM5258	
	NCR	2316	
		NCR2316	
	NEC	μPD2316	
	OKI	**MSM2916**	**4118**
	Rockwell	R2316	
	SGS	M2316	
	TI	SBP8316	
	Toshiba	TMM331A	
		TMM334	
F3532	AMD	AM9232	
	AMI	S68322	
		S68A332	
	GI	R094132	
		T094132	
	GTEMicro	2332	
	Hitachi	HN46332	
	Intersil	IM7332	
	Motorola	MC68332	
		MCM68332	
		MCM68A332	**4048**
	National	MM52132	
	NCR	2332	
		NCR2332	
	NEC	**μPD2332**	**4100**
	OKI	**MSM2932**	**4118**
	RCA	**CDM5333**	**1593**
	Rockwell	R2332	
	SiliconG	SG3532	
	SSS	SCM23C32	
	SMC	ROM4732	
	Synertek	**SY2332**	**4211**
	TI	**TMS4732**	**4226**
	Toshiba	TM2332	
		TMM333	
	Universal	UM2332	
	VTI	**VT2332**	**4249**
F3532-35	Universal	UM2332-35	
F3533	AMD	AM9233	
	AMI	**S2333**	**3932**
	GI	R09433	
	Intel	2332	
	NCR	2333	
		NCR2333	
	RCA	**CDM5332**	**1593**
	Signetics	2332	
	SSS	SCM23C33	
	Synertek	**SY2333**	**4211**
	Universal	UM2333-45	
	VTI	**VT2333**	**4249**
F3533-35	Universal	UM2333-35	
F3564-25	AMD	AM92640	
	AMI	**S68B364**	**3933**
	GTEMicro	G5364	
	Mostek	MK36000-4	
	Motorola	MCM67365-25	
	NEC	μPD2/8364-20	
		μPD23/8364-20	
	Signetics	2064-20	
	Synertek	SY2364-2	
F3872	SGS	M3872	
F4001	Hitachi	HD14001	
	Motorola	MC14001	
	National	CD4001	
		MM74C02	
	OKI	MSM4001	
	RCA	CD4001	
	Sanyo	LC4001B	
	SGS	HCF4001	
	Signetics	HEF4001	
	SSS	SCL4001	
	Solitron	CM4001	
	Toshiba	TC4001	
F40014	Hitachi	HD14584	
	Motorola	MC14584	

(Continued)

Manufacturer Device	Replacement Source	Device	IC Master Page
F40014	National	CD40106	
		CD4584	
		MM54C14	
		MM74C14	
	RCA	CD40106	
	SGS	HCF40106	
	Signetics	**HEF40106**	**865**
	SSS	SCL4584	
F4002	Hitachi	HD14002	
	Motorola	MC14002	
	National	CD4002	
	RCA	CD4002	
	SGS	HCF4002	
	Signetics	HEF4002	
	SSS	SCL4002	
	Solitron	CM4002	
	Toshiba	TC4002	
F4006	Hitachi	HD14006	
	National	CD4006	
	SGS	HCF4006	
	Signetics	HEF4006	
	SSS	SCL4006	
	Solitron	CM4006	
	Toshiba	TC4006	
F4007	Hitachi	HD14007	
	Motorola	MC14007	
	National	CD4007	
	RCA	CD4007	
	SGS	HCF4007	
	Signetics	HEF4007	
	SSS	SCL4007	
	Solitron	CM4007	
	Toshiba	TC4007	
F4008	Hitachi	HD14008	
	Motorola	MC14008	
	National	CD4008	
		MM74C83	
	RCA	CD4008	
	SGS	HCF4008	
	Signetics	HEF4008	
	SSS	SCL4008	
	Solitron	CM4008	
	Toshiba	TC4008	
F40085	Hitachi	HD14585	
	Motorola	MC14585	
	National	MM74C85	
	RCA	CD4585	
	Signetics	HEF4585	
	SSS	SCL4585	
	Toshiba	TC4585	
F40089	National	MM74C89	
F40097	Hitachi	HD14503	
	Motorola	MC14503	
	National	CD4503	
		MM80C97	
	RCA	CD4503	
	Signetics	HEF40097	
F40098	National	MM80C98	
	Signetics	HEF40098	
F4011	Hitachi	HD14011	
	Motorola	MC14011	
	National	CD4011	
		MM74C00	
	OKI	MSM4011	
	RCA	CD4011	
	Sanyo	LC4011	
	SGS	HCF4011	
	Signetics	HEF4011	
	SSS	SCL4011	
	Solitron	CM4011	
	Toshiba	TC4011	
F4012	Hitachi	HD14012	
	Motorola	MC14012	
	National	CD4012	
	RCA	CD4012	
	SGS	HCF4012	
	Signetics	HEF4012	
	SSS	SCL4012	
	Solitron	CM4012	
	Toshiba	TC4012	
F4013	Hitachi	HD14013	
	Motorola	MC14013	
	National	CD4013	
		MM74C74	
	OKI	MSM4013	
	RCA	CD4013	
	Sanyo	LC4013	
	SGS	HCF4013	
	Signetics	HEF4013	
	SSS	SCL4013	
	Solitron	CM4013	
	Toshiba	TC4013	

Manufacturer Device	Replacement Source	Device	IC Master Page
F4014	Hitachi	HD14014	
	Motorola	MC14014	
	National	CD4014	
	RCA	CD4014	
	SGS	HCF4014	
	Signetics	HEF4014	
	SSS	SCL4014	
	Solitron	CM4014	
	Toshiba	TC4014	
F4015	Hitachi	HD14015	
	Motorola	MC14015	
	National	CD4015	
		MM74C164	
	OKI	MSM4015	
	RCA	CD4015	
	Sanyo	LC4015	
	SGS	HCF4015	
	Signetics	HEF4015	
	SSS	SCL4015	
	Solitron	CM4015	
	Toshiba	TC4015	
F4016	Fairchild	F4066	
	Hitachi	HD14016	
		HD14066	
	Motorola	MC14016	
		MC14066	
	National	CD4016	
		CD4066	
	RCA	CD4016	
		CD4066	
	Sanyo	LC4016	
		LC4066	
	SGS	HCF4016	
		HCF4066	
	Signetics	**HEF4016**	**864**
		HEF4066	
	SSS	SCL4016	
		SCL4066	
	Solitron	CM4016	
		CM4066	
		HCF4016	
	Toshiba	TC4016	
		TC4066	
F40160	Hitachi	HD14160	
	Motorola	MC14160	
	National	CD40160	
		MM54C160	
		MM74C160	
	RCA	CD40160	
	SGS	HCF40160	
	SSS	SCL4160	
	Toshiba	TC40160	
F40161	Hitachi	HD14161	
	Motorola	MC14161	
	National	CD40161	
		MM54C161	
		MM74C161	
	RCA	CD40161	
	SGS	HCF40161	
	Signetics	HEF40161	
	SSS	SCL4161	
	Toshiba	TC40161	
F40162	Hitachi	HD14162	
	Motorola	MC14162	
	National	CD40162	
		MM54C162	
		MM74C162	
	RCA	CD40162	
	SGS	HCF40162	
	Signetics	HEF40162	
	SSS	SCL4162	
	Toshiba	TC40162	
F40163	Hitachi	HD14163	
	Motorola	MC14163	
	National	CD40163	
		MM54C163	
		MM74C163	
	RCA	CD40163	
	SGS	HCF40163	
	Signetics	HEF40163	
	SSS	SCL4163	
	Toshiba	TC40163	
F4017	Hitachi	HD14017	
	Motorola	MC14017	
	National	CD4017	
	RCA	CD4017	
	SGS	HCF4017	
	Signetics	HEF4017	
	SSS	SCL4017	
	Solitron	CM4017	
	Toshiba	TC4017	

Manufacturer Device	Replacement Source	Device	IC Master Page
F40174	Hitachi	HD14174	
	Motorola	MC14174	
	National	CD40174	
		MM54C174	
		MM74C174	
	RCA	CD40174	
	SGS	HCF40174	
	Signetics	HEF40174	
	SSS	SCL4174	
	Toshiba	TC40174	
F40175	Hitachi	HD14175	
	Motorola	MC14175	
	National	CD40175	
		MM54C175	
		MM74C175	
	Signetics	HEF40175	
	Toshiba	TC40175	
F4018	Hitachi	HD14018	
	Motorola	MC14018	
	National	CD4018	
	RCA	CD4018	
	SGS	HCF4018	
	Signetics	HEF4018	
	SSS	SCL4018	
	Solitron	CM4018	
	Toshiba	TC4018	
F4019	National	CD4019	
	OKI	MSM4019	
	RCA	CD4019	
	Sanyo	LC4019	
	SGS	HCF4019	
	Signetics	HEF4019	
	SSS	SCL4019	
	Solitron	CM4019	
	Toshiba	TC4019	
F40192	National	MM54C192	
		MM74C192	
F40193	National	CD40193	
		MM54C193	
		MM74C193	
	RCA	CD40193	
	SGS	HCF40193	
	Signetics	HEF40193	
	SSS	SCL4193	
	Toshiba	TC40193	
F40194	Hitachi	HD14194	
	Motorola	MC14194	
	RCA	CD40194	
	SGS	HCF40194	
	Signetics	HEF40194	
F40195	National	CD40195	
		MM74C195	
F4020	Hitachi	HD14020	
	Motorola	MC14020	
	National	CD4020	
	RCA	CD4020	
	SGS	HCF4020	
	Signetics	HEF4020	
	SSS	SCL4020	
	Solitron	CM4020	
	Toshiba	TC4020	
F4021	Hitachi	HD14021	
	Motorola	MC14021	
	National	CD4021	
	RCA	CD4021	
	SGS	HCF4021	
	Signetics	HEF4021	
	SSS	SCL4021	
	Toshiba	TC4021	
F4022	Hitachi	HD14022	
	Motorola	MC14022	
	National	CD4022	
	RCA	CD4022	
	SGS	HCF4022	
	Signetics	HEF4022	
	SSS	SCL4022	
	Solitron	CM4022	
	Toshiba	TC4022	
F4023	Hitachi	HD14023	
	Motorola	MC14023	
	National	CD4023	
		MM74C10	
	RCA	CD4023	
	SGS	HCF4023	
	Signetics	HEF4023	
	SSS	SCL4023	
	Solitron	CM4023	
	Toshiba	TC4023	
F4024	Hitachi	HD14024	
	Motorola	MC14024	
	National	CD4024	
	RCA	CD4024	

(Continued)

◆ Discontinued

Bold face device numbers indicate manufacturers data is provided in the IC Master on the pages noted.

Fairchild (Cont'd)

Manufacturer Device	Replacement Source	Device	IC Master Page
F4024	SGS	HCF4024	
	Signetics	HEF4024	
	SSS	SCL4024	
	Solitron	CM4024	
	Toshiba	TC4024	
F4025	Hitachi	HD14025	
	Motorola	MC14025	
	National	CD4025	
	RCA	CD4025	
	SGS	HCF4025	
	Signetics	HEF4025	
	SSS	SCL4025	
	Solitron	CM4025	
	Toshiba	TC4025	
F4027	Hitachi	HD14027	
	Motorola	MC14027	
	National	CD4027	
		MM74C76	
	OKI	MSM4027	
	RCA	CD4027	
	Sanyo	LC4027	
	SGS	HCF4027	
	Signetics	HEF4027	
	SSS	SCL4027	
	Solitron	CM4027	
F4028	Hitachi	HD14028	
	Motorola	MC14028	
	National	CD4028	
		MM74C42	
	OKI	MSM4028	
	Sanyo	LC4028	
	SGS	HCF4028	
	Signetics	HEF4028	
	SSS	SCL4028	
	Solitron	CM4028	
	Toshiba	TC4028	
F4029	Motorola	MC14029	
	National	CD40192	
		CD4029	
	RCA	CD40192	
		CD4029	
	SGS	HCF40192	
		HCF4029	
	Signetics	HEF40192	
	SSS	SCL4029	
		SCL4192	
	Solitron	CM4029	
	Toshiba	TC40192	
		TC4029	
F4030	National	CD4030	
	RCA	CD4030	
	SGS	HCF4030	
	Signetics	HEF4030	
	SSS	SCL4030	
	Solitron	CM4030	
	Toshiba	TC4030	
F4031	National	CD4031	
	RCA	CD4031	
	SGS	HCF4031	
	Signetics	HEF4731	
F4034	Hitachi	HD14034	
	Motorola	MC14034	
	National	CD4034	
	RCA	CD4034	
	SGS	HCF4034	
	SSS	SCL4034	
	Solitron	CM4034	
	Toshiba	TC4034	
F4035	Hitachi	HD14035	
	Motorola	MC14035	
	RCA	CD4035	
	SGS	HCF4035	
	Signetics	HEF4035	
	Solitron	CM4035	
	Toshiba	TC4035	
F4040	Hitachi	HD14040	
	Motorola	MC14040	
	National	CD4040	
	RCA	CD4040	
	SGS	HCF4040	
	Signetics	HEF4040	
	SSS	SCL4040	
	Solitron	CM4040	
	Toshiba	TC4040	
F4041	National	CD4041	
	RCA	CD4041	
	SGS	HCF4041	
	Signetics	HEF4041	
	SSS	SCL4041	
	Solitron	CM4041	
F4042	Hitachi	HD14042	
	Motorola	MC14042	
	National	CD4042	
	RCA	CD4042	
	SGS	HCF4042	
	Signetics	HEF4042	
	SSS	SCL4042	
	Solitron	CM4042	
	Toshiba	TC4042	
F4044	Hitachi	HD14044	
	Motorola	MC14044	
	National	CD4044	
	RCA	CD4044	
	SGS	HCF4044	
	Signetics	HEF4044	
	Solitron	CM4044	
	Toshiba	TC4044	
F4046	Hitachi	HD14046	
	Motorola	MC14046	
	National	CD4046	
	RCA	CD4046	
	SGS	HCF4046	
	SSS	SCL4046	
	Solitron	CM4046	
F4047	National	CD4047	
	RCA	CD4047	
	SGS	HCF4047	
	Signetics	HEF4047	
	SSS	SCL4047	
	Solitron	CM4047	
	Toshiba	TC4047	
F4049	Hitachi	HD14049	
	Motorola	MC14049	
	National	CD4049	
	OKI	MSM4049	
	RCA	CD4049	
	Sanyo	LC4049	
	SGS	HCF4049	
	Signetics	HEF4049	
	SSS	SCL4049	
	Solitron	CM4049	
	Toshiba	TC4049	
F4050	Hitachi	HD14050	
	~~Motorola~~	~~MC14050~~	
	National	CD4050	
	RCA	CD4050	
	SGS	HCF4050	
	Signetics	HEF4050	
	SSS	SCL4050	
	Solitron	CM4050	
	Toshiba	TC4050	
F4051	Hitachi	HD14051	
	Motorola	MC14051	
	National	CD4051	
	RCA	CD4051	
	SGS	HCF4051	
	Signetics	HEF4051	
	SSS	SCL4051	
	Solitron	CM4051	
	Toshiba	TC4051	
F4052	Motorola	MC14052	
	RCA	CD4052	
	Signetics	HEF4052	
F4053	Hitachi	HD14053	
	Motorola	MC14053	
	National	CD4053	
	RCA	CD4053	
	SGS	HCF4053	
	Signetics	HEF4053	
	SSS	SCL4053	
	Solitron	CM4053	
	Toshiba	TC4053B	
F4066	Fairchild	F4016	
	Hitachi	HD14016	
		HD14066	
	Motorola	MC14016	
		MC14066	
	National	CD4016	
		CD4066	
	RCA	CD4016	
		CD4066	
	Sanyo	LC4016	
		LC4066	
	SGS	HCF4016	
		HCF4066	
	Signetics	**HEF4016**	**864**
		HEF4066	
	SSS	SCL4016	
		SCL4066	
	Solitron	CM4016	
		CM4066	
		HCF4016	
F4066	Toshiba	TC4016	
		TC4066	
F4067	Motorola	MC14067	
	RCA	CD4067	
	SGS	HCF4067	
	Signetics	HEF4067	
F4068	Hitachi	HD14068	
	Motorola	MC14068	
	RCA	CD4068	
	SGS	HCF4068	
	Signetics	HEF4068	
	SSS	SCL4068	
	Solitron	CM4068	
	Toshiba	TC4068	
F4069	Hitachi	HD14069	
	Motorola	MC14069	
	National	CD4069	
		MM54C04	
		MM74C04	
	OKI	MSM4069	
	RCA	CD4069	
	Sanyo	LC4069	
	SGS	HCF4069	
	Signetics	HEF4069	
	SSS	SCL4069	
		SCL4449	
	Solitron	CM4069	
	Toshiba	TC4069	
F4070	Hitachi	HD14070	
	Motorola	MC14070	
	National	CD4070	
		MM74C86	
	RCA	CD4070	
	SGS	HCF4070	
	Signetics	HEF4070	
	SSS	SCL4070	
	Solitron	CM4070	
F4071	Hitachi	HD14071	
	Motorola	MC14071	
	National	CD4071	
		MM74C32	
	OKI	MSM4071	
	RCA	CD4071	
	~~Sanyo~~	~~LC4071~~	
	SGS	HCF4071	
	Signetics	HEF4071	
	SSS	SCL4071	
	Solitron	CM4071	
	Toshiba	TC4071	
F4072	Hitachi	HD14072	
	Motorola	MC14072	
	National	CD4072	
	RCA	CD4072	
	SGS	HCF4072	
	Signetics	HEF4072	
	SSS	SCL4072	
	Toshiba	TC4072	
F4073	Hitachi	HD14073	
	Motorola	MC14073	
	National	CD4073	
	RCA	CD4073	
	SGS	HCF4073	
	Signetics	HEF4073	
	SSS	SCL4073	
	Solitron	CM4073	
	Toshiba	TC4073	
F4075	Hitachi	HD14075	
	Motorola	MC14075	
	National	CD4075	
	RCA	CD4075	
	SGS	HCF4075	
	Signetics	HEF4075	
	SSS	SCL4075	
	Solitron	CM4075	
	Toshiba	TC4075	
F4076	Hitachi	HD14076	
	Motorola	MC14076	
	National	CD4076	
		MM54C173	
		MM74C173	
	RCA	CD4076	
	SGS	HCF4076	
	Signetics	HEF4076	
	SSS	SCL4076	
	Solitron	CM4076	
	Toshiba	TC4076	
F4077	Hitachi	HD14077	
	Motorola	MC14077	
	National	CD4077	
	RCA	CD4077	
	SGS	HCF4077	
	Signetics	HEF4077	
F4077	SSS	SCL4077	
	Solitron	CM4077	
F4078	Hitachi	HD14078	
	Motorola	MC14078	
	RCA	CD4078	
	SGS	HCF4078	
	Signetics	HEF4078	
	SSS	SCL4078	
	Solitron	CM4078	
	Toshiba	TC4078	
F4081	Hitachi	HD14081	
	Motorola	MC14081	
	National	CD4081	
		MM74C08	
	OKI	MSM4081	
	RCA	CD4081	
	Sanyo	LC4081	
	SGS	HCF4081	
	Signetics	HEF4081	
	SSS	SCL4081	
	Solitron	CM4081	
	Toshiba	TC4081	
F4082	Hitachi	HD14082	
	Motorola	MC14082	
	National	CD4082	
	RCA	CD4082	
	SGS	HCF4082	
	Signetics	HEF4082	
	SSS	SCL4082	
	Toshiba	TC4082	
F4085	National	CD4085	
	RCA	CD4085	
	SGS	HCF4085	
	Signetics	HEF4085	
	SSS	SCL4085	
	Toshiba	TC4085	
F4086	RCA	CD4086	
	SGS	HCF4086	
	Signetics	HEF4086	
	SSS	SCL4086	
	Toshiba	TC4086	
F4093	Hitachi	HD14093	
	Motorola	MC14093	
	~~National~~	~~CD4093~~	
	OKI	MSM4093	
	RCA	CD4093	
	Sanyo	LC4093	
	SGS	HCF4093	
	Signetics	HEF4093	
	SSS	SCL4093	
	Toshiba	TC4093	
F4097	Motorola	MC14097	
	RCA	CD4097	
	SGS	HCF4097	
F4104	Mitel	MD4104	
	Motorola	MC14504	
	National	MM4104	
	RCA	CD40109	
	SGS	HCF40109	
	Signetics	HEF4104	
F4116	AMD	AM9016	
	Hitachi	HM4716	
	Intel	2118	
	Intersil	IM7116	
	ITT	ITT4116	
	Mostek	MK4116	
	Motorola	MCM4116	
	National	MM5290	
	NEC	**μPD416**	**4073**
	Panasonic	MN4116	
	SGS	M4116	
	Siemens	HYB4116	
	Signetics	2690	
	TI	TMS4116	
F4164	Fairchild	F64K	
	Fujitsu	MB8264	
		MB8266	
	Hitachi	HM4864	
	IMS	IMS2600	
	Intel	2164	
	Motorola	MCM6665	
	National	NMC4164	
	NEC	μPD4164	
	OKI	MSM3764	
	TI	TMS4164	
	Toshiba	TMM4164	
F4510	Hitachi	HD14510	
	Motorola	MC14510	
	National	CD4510	
	RCA	CD4510	
	SGS	HCF4510	
	Signetics	HEF4510	

(Continued)

◆ Discontinued

The manufacturers report their devices can be used as direct replacements.
Performance details often differ, so compare the specifications considering your requirements.

Fairchild (Cont'd)

Manufacturer Device	Replacement Source	Replacement Device	IC Master Page
F4510	SSS	SCL4510	
	Solitron	CM4510	
	Toshiba	TC4510	
F4511	Hitachi	HD14511	
	Mitel	MD4511	
	MMI	4511	
	Motorola	MC14511	
	National	CD4511	
	NEC	μPD4511	
	RCA	CD4511	
	SGS	HCF4511	
	Signetics	HEF4511	
	SSS	SCL4511	
	Solitron	CM4511	
	Toshiba	TC4511	
F4512	Hitachi	HD14512	
	Motorola	MC14512	
	National	CD4512	
	RCA	CD4512	
	SGS	HCF4512	
	SSS	SCL4512	
	Toshiba	TC4512	
F4514	Hitachi	HD14514	
	Motorola	MC14514	
	National	CD4514	
	RCA	CD4514	
	SGS	HCF4514	
	Signetics	HEF4514	
	SSS	SCL4514	
	Solitron	CM4514	
	Toshiba	TC4514	
F4515	Hitachi	HD14515	
	Motorola	MC14515	
	National	CD4515	
	RCA	CD4515	
	SGS	HCF4515	
	Signetics	HEF4515	
	SSS	SCL4515	
	Solitron	CM4515	
	Toshiba	TC4515	
F4516	Hitachi	HD14516	
	Motorola	MC14516	
	National	CD4516	
	RCA	CD4516	
	SGS	HCF4516	
	Signetics	HEF4516	
	SSS	SCL4516	
	Solitron	CM4516	
	Toshiba	TC4516	
F4518	Hitachi	HD14518	
	Motorola	MC14518	
	National	CD4518	
	RCA	CD4518	
	SGS	HCF4518	
	Signetics	HEF4518	
	SSS	SCL4518	
	Solitron	CM4518	
	Toshiba	TC4518	
F4520	Hitachi	HD14520	
	Motorola	MC14520	
	National	CD4520	
	OKI	MSM4520	
	RCA	CD4520	
	Sanyo	LC4520	
	SGS	HCF4520	
	Signetics	HEF4520	
	SSS	SCL4520	
	Solitron	CM4520	
	Toshiba	TC4520	
F4521	Motorola	MC14521	
	RCA	CD4045	
	SGS	HCF4045	
	Signetics	HEF4521	
	SSS	SCL4445	
	Solitron	CM4045	
	Toshiba	TC4521	
F4522	Hitachi	HD14522	
	Motorola	MC14522	
	National	CD4522	
	RCA	CD4522	
	Signetics	HEF4522	
	SSS	SCL4522	
	Toshiba	TC4522	
F4526	Hitachi	HD14526	
	Motorola	MC14526	
	National	CD4526	
	Signetics	HEF4526	
	SSS	SCL4526	
	Toshiba	TC4526	
F4527	Hitachi	HD14527	
	Motorola	MC14527	
	National	CD4527	
	RCA	CD4527	
	SGS	HCF4527	
	Signetics	HEF4527	
	SSS	SCL4527	
	Toshiba	TC4527	
		TR4527	
F4528	Hitachi	HD14528	
	Motorola	MC14528	
	National	CD4528	
		MM74C221	
	RCA	CD4098	
	SGS	HCF4098	
	Signetics	HEF4528	
	SSS	SCL4528	
	Toshiba	TC4528	
F4531	Hitachi	HD14531	
	Motorola	MC14531	
	RCA	CD40101	
	SGS	HCF40101	
	Signetics	HEF4531	
	SSS	SCL4531	
	Toshiba	TC4531	
F4532	Hitachi	HD14532	
	Motorola	MC14532	
	RCA	CD4532	
	SGS	HCF4532	
	Signetics	HEF4532	
	SSS	SCL4532	
	Toshiba	TC4532	
F4539	Hitachi	HD14539	
	Motorola	MC14539	
	Signetics	HEF4539	
	Toshiba	TC4539	
F4543	Hitachi	HD14543	
	Motorola	MC14543	
	National	CD4543	
	RCA	CD4543	
	Signetics	HEF4543	
	Toshiba	TC4543	
F4553	Hitachi	HD14553	
	Motorola	MC14533	
		MC14553	
F4555	Hitachi	HD14555	
	Motorola	MC14555	
	RCA	CD4555	
	SGS	HCF4555	
	Signetics	HEF4555	
	SSS	SCL4555	
	Toshiba	TC4555	
F4556	Motorola	MC14556	
	RCA	CD4556	
	SGS	HCF4556	
	Signetics	HEF4556	
	SSS	SCL4556	
	Toshiba	TC4556	
F4557	Hitachi	HD14557	
	Motorola	MC14557	
	Signetics	HEF4557	
F4582.	Hitachi	HD14582	
	Motorola	MC14582	
	RCA	CD40182	
	SGS	HCF40182	
	SSS	SCL4582	
F4583	Hitachi	HD14583	
	Motorola	MC14583	
	Toshiba	TC4583	
F4702	Harris	HD4702	
F4720	Signetics	HEF4720	
F4723	National	CD4723	
F4724	RCA	CD4724	
F4727	Signetics	HEF4724	
F4XXX	Fairchild	34XXX	
	Hitachi	HD14XXX	
	Motorola	MC14XXX	
	National	CD4XXX	
	OKI	MSM4XXX	
	RCA	CD4XXX	
	SGS	HCF4XXX	
	SSS	SCL4XXX	
	Solitron	CM4XXX	
	TI	TP4000 series	
	Toshiba	TC4XXX	
F64K	Fairchild	F4164	
	Fujitsu	MB8264	
		MB8266	
	Hitachi	HM4864	
	IMS	IMS2600	
	Intel	2164	
	Motorola	MCM6665	

(Continued)

Manufacturer Device	Replacement Source	Replacement Device	IC Master Page
F64K	National	NMC4164	
	NEC	μPD4164	
	OKI	MSM3764	
	TI	TMS4164	
	Toshiba	TMM4164	
F6800A	Hitachi	HD6800	
		HD68A00	
		HD68B00	
	Motorola	**MC6800**	**1505,2045**
	Thomson-CSF		
		EF6800	
F6802	AMI	S6802	
	Hitachi	HD6802	
	Motorola	**MC6802**	**1505,2045**
	Thomson-CSF		
		EF6802	
F6808	AMI	S6808	
	Hitachi	HD6808	
	Motorola	**MC6808**	**1505**
	Thomson-CSF		
		EF6808	
F6810	AMI	S6810	
	Hitachi	HD6810	
		HD68A10	
	Motorola	MC6810	
		MCM6810	**1505,4046**
	Thomson-CSF		
		EF6810	
F6821	AMI	S6821	
	Hitachi	HD6821	
		HD68A21	
		HD68B21	
	Motorola	**MC6821**	**1505**
F68308	Motorola	MCM68308	
F68316	AMD	AM9218	
	Fairchild	3516	
		68316	
		F3516	
		F35316	
	GI	R03-9316	
	GTEMicro	2316	
	Intel	2316	
	Mostek	MK34000	
	Motorola	MCM68316	
		MCM68A316	
		MM2316	
	National	MM52116	
		MM5258	
	NCR	2316	
		NCR2316	
	NEC	μPD2316	
	OKI	**MSM2916**	**4118**
	Rockwell	R2316	
	SGS	M2316	
	TI	SBP8316	
	Toshiba	TMM331A	
		TMM334	
F6840	AMI	S6840	
	Hitachi	HD46840	
		HD6840	
		HD68A40	
		HD68B40	
	Motorola	**MC6840**	**1505**
	Thomson-CSF		
		EF6840	
F6846	AMI	S6846	
	Hitachi	HD46846	
		HD6846P	
	Motorola	**MC6846**	**1505**
F68488	AMI	S68488	
	Motorola	**MC68488**	**1505**
F6850	AMI	S1602	
	Fairchild	3730	
	Fujitsu	MB8868A	
	GI	AY3-1015	
	Hitachi	HD6850	
		HD68A50	
	Motorola	**MC6850**	**1505**
	National	MM5303	
	RCA	**CDP6402**	**1595**
	SMC	COM2017	
		COM2502H	
		COM8017	
	Thomson-CSF		
		EF6850	
	Western	TR1402	
		TR1602	
		TR1863	
F6852	AMI	S6852	
	Hitachi	HD6852	
		HD68A52	
	Motorola	**MC2652**	**1511**

(Continued)

Manufacturer Device	Replacement Source	Replacement Device	IC Master Page
F6852	**Motorola**	**MC6852**	**1505**
		MC68652	**1506,1511**
	SSS	SND5025	
	SMC	COM5025	
	Thomson-CSF		
		EF6852	
F6854	AMI	S6854	
	Motorola	**MC6854**	**1505**
F6860	**Motorola**	**MC6860**	**1505,3536**
F6862	**Motorola**	**MC6862**	**1505**
F68708	AMD	AM9708	
	Motorola	MCM68708	
F68B10	**Motorola**	**MCM68B10**	**4046**
F68B308	Motorola	MCM68B308	
F8804	Mitel	MT8804	
F93419	Fujitsu	MBM93419	
F93451	AMD	AM27PS181	
		AM27S181	
		AM27S281	
	Fairchild	93Z451	
	Fujitsu	MB7132	
	Harris	HM7681	
	Hitachi	HN25089	
	Intel	3628	
		3628A	
		3628B	
	MMI	6381-1	
	Motorola	**MCM7681**	**4047**
	National	**DM87S181**	**4057**
		DM87S228	
	NEC	μPB417	
	Raytheon	29631	
		29631A	**4131**
		29633	
	Signetics	825181	
		N82HS181	
		N82S181	
	Supertex	SM82S181	
	TI	TBP28S86	
F9401	Fairchild	9401	
	Motorola	MC8503	
	Signetics	9401	
F9403	Fairchild	9403	
	Signetics	9403	
FQ3724	Motorola	MQ3724	
	Raytheon	SP3724	
	RCA	CA3724	
FQ3725	Motorola	MQ3725	
	National	DH3725	
	Raytheon	SP3725	
	RCA	CA3725	
M4027	Mostek	MK4027	
	SGS	M4027	
MA0802M	AMD	AM1408	
		SSS1408	
	AD	AD1408	
		ADDAC-08	
	Datel	DAC-08B	
		DAC-I8BC	
		DAC-IC8B	
		DAC-IC8BC	**2863**
	Fairchild	DAC-08	
		μA0801	
		μA0802	
	Motorola	**DAC-08**	**3069**
		MC1408	
	National	DAC0800	
		DAC0801	
		DAC0802	
		DAC0806	
		DAC0807	
		DAC0808	
	NEC	μPC624	
	PMI	DAC-08	
		DAC-1408	
	Raytheon	**DAC-08**	**3591**
	Signetics	MC1408	
MC1412	Exar	XR2002	
		XR2202	
	Fairchild	9666	
	Motorola	**MC1412**	**3064**
		ULN2002	
	NEC	μPA2002	
	RIFA	PBD352304	
	Sanyo	LB1232	
	SGS	L202	
	Signetics	NE5602	
	Sprague	ULN-2002	
		ULQ-2003	
	TI	ULN2002	
	Toshiba	TD62002	

◆ Discontinued

Bold face device numbers indicate manufacturers data is provided in the IC Master on the pages noted.

© IC MASTER 1984

Fairchild (Cont'd)

Manufacturer Device	Replacement Source	Device	IC Master Page
MC1413	Exar	XR2003	
		XR2004	
		XR2203	
	Fairchild	9667	
	Mitsubishi	M54523	
	Motorola	**MC1413**	**3064**
		ULN2003	
	Sanyo	LB1233	
	SGS	L203	
	Signetics	NE5603	
		ULN2003	
	SiliconG	SG2003	
	Sprague	ULN-2003	
		ULQ-2003	
		ULQ-2004	
		ULS-2003	
		ULS-2004	
	TI	ULN2003	
	Toshiba	TD62003	
MC5524	Motorola	MC5524	
	National	LM5524	
	Raytheon	RM5524	
	SiliconG	SG5524	
	TI	SN5524	
MC5525	Motorola	MC5525	
	National	LM5525	
	SiliconG	SG5525	
MC5528	Motorola	MC5528	
	National	LM5528	
	SiliconG	SG5528	
	TI	SN5528	
MC5529	Motorola	MC5529	
	National	LM5529	
	SiliconG	SG5529	
MC55325	Motorola	MC55325	
	National	DS55325	
		LM55325	
	Signetics	55325	
	SiliconG	SG55325	
	TI	SN55325	
MC5534	Motorola	MC5534	
	National	LM5534	
	SiliconG	SG5534	
MC7905	Lambda	LMC7905	
	Motorola	MC7905	
	SiliconG	SG7905	
MC7908	Fairchild	μA7908	
		μA79M08	
	Lambda	LMC7908	
		LμA7908	
	Motorola	MC7908	
	SiliconG	SG7908	
	TI	μA7908	
		μA79M08	
SH0323	Fairchild	SH323	
		μA78H05	
	Lambda	LAS1405	
		LAS1905	
	LinearTech	LM323	
	Micropac	M78H05	
	Motorola	**LM323**	**3531**
		MC78T05C	
	National	LM323	
	SiliconG	SG323	
SH2001	Motorola	MC943	
SH3002	**Siliconix**	**SI3002**	**3078**
SH323	Fairchild	SH0323	
		μA78H05	
	Lambda	LAS1405	
		LAS1905	
	LinearTech	LM323	
	Micropac	M78H05	
	Motorola	**LM323**	**3531**
		MC78T05C	
	National	LM323	
	SiliconG	SG323	
TBA800	Plessey	TBA800	
	SGS	TBA800	
	Thomson-CSF		
		TBA800	
TBA810	RCA	CA810	
	SGS	TBA810	
TDA1194	Hitachi	HA1364	
	RCA	CA1190	
	SGS	TDA1190	
		TDA1190Z	
		TDA3190	
	Sprague	ULN-2290	
TDA2002	National	LM2002	
		LM383	

(Continued)

Manufacturer Device	Replacement Source	Device	IC Master Page
TDA2002	RCA	CA2002	
	SGS	TBA2002	
	Sprague	ULN-3701	
		ULN-3702	
TDA2003	SGS	TDA2003	
	Sprague	ULN-3703	
ULN-2136	Fairchild	μA2136	
	Motorola	MC1356	
	RCA	CA2136	
	TI	SN76669	
μA0801	AMD	AM1408	
		SSS1408	
	AD	AD1408	
		ADDAC-08	
	Datel	DAC-08B	
		DAC-I8BC	
		DAC-IC8B	
		DAC-IC8BC	**2863**
	Fairchild	DAC-08	
		MA0802M	
		μA0802	
	Motorola	**DAC-08**	**3069**
		MC1408	
	National	DAC0800	
		DAC0801	
		DAC0802	
		DAC0806	
		DAC0807	
		DAC0808	
	NEC	μPC624	
	PMI	DAC-08	
		DAC-1408	
	Raytheon	**DAC-08**	**3591**
	Signetics	MC1408	
μA0802	AMD	AM1408	
		SSS1408	
	AD	AD1408	
		ADDAC-08	
	Datel	DAC-08B	
		DAC-I8BC	
		DAC-IC8B	
		DAC-IC8BC	**2863**
	Fairchild	DAC-08	
		MA0802M	
		μA0801	
	Motorola	**DAC-08**	**3069**
		MC1408	
	National	DAC0800	
		DAC0801	
		DAC0802	
		DAC0806	
		DAC0807	
		DAC0808	
	NEC	μPC624	
	PMI	DAC-08	
		DAC-1408	
	Raytheon	**DAC-08**	**3591**
	Signetics	MC1408	
μA101	AMD	LM101	
	AD	AD101	
	Intersil	AD101	
	LinearTech	LM101	
	Motorola	LM101	
	Raytheon	LM101	
	SiliconG	SG101	
	TI	LM101	
	Thomson-CSF		
		SFC2101	
μA105	AMD	LM105	
	Intersil	LM105	
	National	LM105	
	SiliconG	SG105	
	Thomson-CSF		
		SFC2105	
μA108	AMD	LM108	
	AD	**AD108**	**3351**
	Fairchild	μA725	
	Intel	ISBC108	
	Intersil	ICL108	
		LM108	
	LinearTech	LM108	
		LM108A	
		OP-05	
	MicroPwr	MP5501	
		MP5505	
		MPLM108A	
		OP-08	
	Motorola	LM108	
	National	LM108	
		LM108A	
	NEC	μPC154	
	PMI	OP-01	

(Continued)

Manufacturer Device	Replacement Source	Device	IC Master Page
μA108	**PMI**	**OP-05**	**3566**
		OP-06	
		OP-07	**3566**
		PM108	
		PM725	
	Raytheon	**OP-05**	**3592**
		OP-07	**3592**
		RC725	
		RM725	
	Signetics	LM108	
μA109	Motorola	LM109	
	National	LM109	
	SiliconG	SG109	
	TI	SN55109	
	Thomson-CSF		
		SFC2109	
μA111	AMD	LM111	
	AD	AD111	
	Intersil	LM111	
	Motorola	LM111	
	National	LM111	
	Raytheon	LM111	
	Signetics	LM111	
	SiliconG	SG111	
	TI	LM111	
	Thomson-CSF		
		SFC2111	
μA139	AMD	LM139	
	Motorola	LM139	
	National	LM139	
	PMI	CMP-04	
		PM139	
	Raytheon	LM139	
	RCA	**CA139**	**3599**
	Signetics	LM139	
	SiliconG	SG139	
	TI	LM139	
μA1458	AMD	AM1458	
	Exar	XR1458	
		XR4558	
	Harris	HA-2655	
	Hitachi	HA17458	
	MicroPwr	MPOP14	
	Motorola	MC1458	
		MC4558C	
		RC4558	
	National	LM1458	
	NEC	μPC1458	
		μPC4558	
	PMI	PM1458	
	Raytheon	RC1458	
		RC4558	**3592**
	RCA	CA1458	
		LM1458	
		RC4558	
		SSS1458	
	Sanyo	LA6458A	
	Signetics	MC1458	
		NE4558	
	SiliconG	SG1458	
	TI	MC1458	
		RC4558	
μA1488	AMD	MC1488	
	Exar	**XR1488**	**3384**
	Hitachi	HD75188	
	Motorola	**MC1488**	**3064**
	National	DS1488	
	Raytheon	RM1488	
	Signetics	MC1488	
	SiliconG	SG1488	
	TI	MC1488	
		SN75188	
μA1489	AMD	MC1489	
	Exar	XR1489	
	Hitachi	HD75189	
	Motorola	**MC1489**	**3064**
	National	DS1489	
	Signetics	MC1489	
	SiliconG	SG1489	
	TI	SN75189	
		SN85189	
μA1489A	**Exar**	**XR1489A**	**3384**
	Motorola	**MC1489A**	**3064**
	National	DS1489A	
	Signetics	MC1489A	
	SiliconG	SG1489A	
	TI	MC1489A	
		SN75189A	
μA1558	AMD	AM1558	
	Exar	XR1558	
	Harris	**HA-2650**	**3414**
	Motorola	MC1558	

(Continued)

Manufacturer Device	Replacement Source	Device	IC Master Page
μA1558	Motorola	MC4558	
		RC1558	
	National	LM1558	
	PMI	**OP-14**	**3566**
		PM1558	
	Raytheon	RC1558	
		RM1558	
		RM4558	
	RCA	CA1558	
		LM1558	
		SSS1558	
	Signetics	MC1558	
	SiliconG	SG1558	
	TI	MC1558	
		RM4558	
μA193	Motorola	LM193	
	National	LM193A	
	Signetics	LM193	
	TI	LM193	
μA201	AMD	LM201	
	AD	AD201	
	Fairchild	μA748	
	Intersil	LM748	
		μA748	
	Motorola	LM201	
		MC1748	
	National	LM201	
		LM748	
	Plessey	SL748	
	RCA	CA201	
		CA748	
		LM748	
	SiliconG	SG201	
		SG748	
	TI	LM201	
		SN72748P	
		μA748	
	Thomson-CSF		
		SFC2201	
		SFC2748	
μA208	AMD	LM208	
	AD	**AD208**	**3351**
	LinearTech	OP-05	
	MicroPwr	MP5505	
		MP5508	**3529**
		MPLM208	**3529**
	Motorola	LM208	
	National	LM208	
	PMI	**OP-05**	**3566**
		PM208	
	Raytheon	**OP-05**	**3592**
	SiliconG	SG208	
	TI	μA714	
	Thomson-CSF		
		SFC2208	
μA209	AMD	LM209	
	Lambda	LLM209	
	Motorola	LM209	
	National	LM209	
	SiliconG	SG209	
	Thomson-CSF		
		SFC2209	
μA2136	Fairchild	ULN-2136	
	Motorola	MC1356	
	RCA	CA2136	
	TI	SN76669	
μA224	AMD	LM224	
	Motorola	LM224	
	National	LM224	
	Raytheon	LM224	
	RCA	CA224	
	Signetics	LM224	
	SiliconG	SG224	
	TI	LM224	
	Thomson-CSF		
		TDE0124	
μA2240	Exar	XR2240	
	Intersil	ICL8240	
	TI	μA2240	
μA239	AMD	LM239	
	Motorola	LM239	
	National	LM239	
	PMI	CMP-04	
		PM239	
	Raytheon	LM239	
	RCA	**CA239**	**3599**
	Signetics	LM239	
	SiliconG	SG239	
	TI	LM239	
	Thomson-CSF		
		TDE0139	

◆ Discontinued

The manufacturers report their devices can be used as direct replacements.
Performance details often differ, so compare the specifications considering your requirements.

Fairchild (Cont'd)

Manufacturer Device	Replacement Source	Device	IC Master Page
μA2901	Fairchild	μA3302	
	Motorola	LM2901	
		MC3302	
	National	LM2901	
		LM3302	
	NEC	μPC2901	
	PMI	CMP-04	
	Raytheon	LM2901	
		RC3302	
	RCA	CA3302	
	Signetics	LM2901	
		MC3302	
	SiliconG	SG3302	
	TI	LM2901	
		LM3302	
μA2902	Hitachi	HA17902	
	Motorola	LM2902	
	National	LM2902	
	NEC	μPC2902	
	Raytheon	LM2902	
	TI	LM2902	
μA2903	AMD	LM311	
	AD	AD311	
	Fairchild	μA311	
	Intersil	LM311	
	Motorola	LM2903	
		LM311	
	National	LM2903	
		LM311	
	NEC	μPC271	
		μPC311	
	Raytheon	LM311	
	RCA	**CA311**	**3598**
		LM311	
	Signetics	LM2903	
		LM311	
	SiliconG	SG311	
	TI	LM2903	
		LM311	
	Thomson-CSF		
		SFC2311	
		SFC3111	
μA293	Motorola	LM293	
	National	LM293	
	Signetics	LM293	
	TI	LM293	
μA301A	AD	AD301	
	Intersil	AD301	
	LinearTech	LM301	
		LM301A	
	Motorola	LM301	
	National	LM301	
		LM301A	
	NEC	μPC157	
		μPC301	
	Raytheon	LM301	
	RCA	CA301	
		LM301	
	SiliconG	SG301	
	TI	LM301	
		LM301A	
	Thomson-CSF		
		SFC2301	
	Toshiba	TA7506	
μA3045	Hitachi	HA1127	
	National	LM3045	
	Plessey	SL3045	
		SL3145	
	RCA	**CA3045**	**3601**
	Sanyo	LA3045	
	SiliconG	SG3045	
		SG3821	
	Sprague	ULS-2045	
μA3046	Motorola	MC3346	
	National	LM3046	
	Plessey	SL3046	
		SL3146	
	RCA	**CA3046**	**3601**
		CA3146	**3601**
	Sanyo	LA3046	
	SiliconG	SG3046	
		SG3146	
		SG3821	
	Sprague	ULN-2046	
μA305	AMD	LM305	
	Intersil	LM305	
	National	LM305	
	NEC	μPC141	

(Continued)

Manufacturer Device	Replacement Source	Device	IC Master Page
μA305	SiliconG	SG305	
	Thomson-CSF		
		SFC2305	
μA3054	Motorola	CA3054	
	National	LM3054	
	RCA	CA3054	
	SiliconG	SG3822	
	Sprague	ULN-2054	
	Thomson-CSF		
		SFC2054	
μA308	AMD	LM308	
	AD	**AD308**	**3351**
	Burr-Brown	3500	
		3501	
	Intersil	AD308	
		LM308	
	MicroPwr	MP5505	
		MPLM308	**3529**
	Motorola	LM308	
	National	LM308	
	Raytheon	LM308	
	SiliconG	SG308	
	Thomson-CSF		
		SFC2308	
μA3086	Motorola	MC3386	
	National	LM3086	
	Plessey	SL3086	
	RCA	**CA3086**	**3601**
	Sanyo	LA3086	
	SiliconG	SG3086	
		SG3886	
	Sprague	ULN-2086	
μA309	AMD	LM309	
	Fairchild	μA7805	
	Lambda	LLM309	
		LMC7805	
		LμA7805	
	Motorola	LM309	
		MC7805	**3531**
	National	LM309	
		LM7805	
	NEC	μPC7805	
	SGS	L7805	
		L7810	
	SiliconG	SG309	
		SG340-05	
		SG340-5	
	TI	μA7805	
	Thomson-CSF		
		SFC2309	
	Toshiba	TA78005	
μA311	AMD	LM311	
	AD	AD311	
	Fairchild	μA2903	
	Intersil	LM311	
	Motorola	LM2903	
		LM311	
	National	LM2903	
		LM311	
	NEC	μPC271	
		μPC311	
	Raytheon	LM311	
	RCA	**CA311**	**3598**
		LM311	
	Signetics	LM2903	
		LM311	
	SiliconG	SG311	
	TI	LM2903	
		LM311	
	Thomson-CSF		
		SFC2311	
		SFC3111	
μA317	LinearTech	LM317	
	MCE	MCE-LM317	
	Motorola	**LM317**	**3532**
	National	LM317	
	SiliconG	SG317	
	TI	LM317	
	Thomson-CSF		
		TDB0117	
μA318	AMD	LM318	
	AD	AD518	
	National	LM318	
	NEC	μPC159	
	TI	LM318	
	Thomson-CSF		
		TDB0118	
μA324	AMD	LM324	
	Exar	**XR3403**	**3378**
		XR3403C	
	Fairchild	μA3403	
	Motorola	LM324	
		MC3403	

(Continued)

Manufacturer Device	Replacement Source	Device	IC Master Page
μA324	National	LM324	
	NEC	μPC324	
	Raytheon	LM324	
		RC3403	
		RC4137	
	RCA	CA324	
		LM324	
	Sanyo	LA6324	
	Signetics	LM324	
		MC3403	
	SiliconG	SG324	
	TI	LM324	
		MC3403	
	Thomson-CSF		
		TDB0124	
μA3302	Fairchild	μA2901	
	Motorola	LM2901	
		MC3302	
	National	LM2901	
		LM3302	
	NEC	μPC2901	
	PMI	CMP-04	
	Raytheon	LM2901	
		RC3302	
	RCA	CA3302	
	Signetics	LM2901	
		MC3302	
	SiliconG	SG3302	
	TI	LM2901	
		LM3302	
μA3303	Motorola	MC3303	
	Signetics	MC3303	
	TI	MC3303	
μA339	AMD	LM339	
		LM339A	
	Hitachi	HA17901	
	Motorola	LM339	
	National	LM339	
	NEC	μPC339	
	PMI	CMP-04	
		PM339A	
	Raytheon	LM339	
	RCA	**CA339**	**3599**
		CA339A	**3599**
		LM339	
	SiliconG	SG339	
	TI	LM339	
	Thomson-CSF		
		TDB0139	
μA3403	AMD	LM324	
	Exar	**XR3403**	**3378**
		XR3403C	
	Fairchild	μA324	
	Motorola	LM324	
		MC3403	
	National	LM324	
	NEC	μPC324	
	Raytheon	LM324	
		RC3403	
		RC4137	
	RCA	CA324	
		LM324	
	Sanyo	LA6324	
	Signetics	LM324	
		MC3403	
	SiliconG	SG324	
	TI	LM324	
		MC3403	
	Thomson-CSF		
		TDB0124	
μA3448A	**Motorola**	**MC3448A**	**3064**
μA348	AMD	LM348	
	Exar	**XR4212**	**3378**
	Harris	HA-4741	
	MicroPwr	MP5511	
	Motorola	MC4741	
	National	LM348	
	NEC	μPC4741	
	PMI	OP-11	
	Raytheon	HA4741	
		LM348	
		RC4156	
	TI	LM348	
	Thomson-CSF		
		TDB0111	
		TDB0148	
μA376	National	LM376	
μA393	Motorola	LM393	
	National	LM393	
	Sanyo	LA6393	
	Signetics	LM393	
	TI	LM393	

Manufacturer Device	Replacement Source	Device	IC Master Page
μA4136	Exar	XR4136	
	MicroPwr	MP5509	
	PMI	OP-09	
		PM4136	
	Raytheon	RC4136	
	SiliconG	SG4136C	
	TI	RC4136	
μA431	Motorola	TL431	
	TI	TL431	
μA494	**Exar**	**XR494**	**3380**
	Motorola	TL494	
	Sprague	ULS8194	
	TI	TL494	
	Unitrode	**UC494A**	**3709**
μA555	Cherry	CS555	
	Exar	XR555	
	Hitachi	HA17555	
	Motorola	MC1455	
	National	LM555	
	NEC	μPC1555	
	Raytheon	RC555	
	RCA	CA355	
		CA555	**3604**
	Sanyo	LB8555	
	Signetics	NE555	
	SiliconG	SG555	
	TI	NE555	
μA556	AMD	LM556	
	Exar	XR556	
		XR556M	
	Motorola	MC3456	
		MC3556	
	National	LM556	
	Raytheon	RC556	
		RM556	
	Signetics	NE556	
		SE556	**526**
	SiliconG	SG556	
	TI	NE556	
		SE556	
μA565	AD	AD565	
	MCE	MCE-565	
μA571	AD	AD571	
	MCE	MCE-571	
μA709	Hitachi	HA1303	
	Motorola	MC1709	
	National	LM1709	
		LM709	
	NEC	μPC255	
		μPC55	
	Raytheon	RC709	
		RM709	
	RCA	CA3038	
	TI	μA709	
	Thomson-CSF		
		SFC2709	
	Toshiba	TA7502	
μA710	Motorola	LM710	
		MC1710	
	National	LM710	
	PMI	CMP-01	
		CMP-02	
	SiliconG	SG710	
	TI	μA710	
	Thomson-CSF		
		SFC2710	
μA711	Motorola	MC1711	
	National	LM711	
	SiliconG	SG711	
	TI	μA711	
	Thomson-CSF		
		SFC2711	
μA714	AD	AD510	
		AD517	
		ADOP-07	**3351**
	Burr-Brown	3510	
	Datel	**AM-430**	**2864**
		AM-490-2	
	Harris	HA-2900	
		HA-2905	
		HA-5130	
		HA-5135	
	MicroPwr	MP517	
		MP5505	
		MP5507	
		OP-07	**3529**
	National	LH0044	
	NEC	μPC725	
	PMI	**OP-05**	**3566**
		OP-07	**3566**
	Raytheon	**OP-05**	**3592**
		OP-07	**3592**

(Continued)

◆ Discontinued

Bold face device numbers indicate manufacturers data is provided in the IC Master on the pages noted.

© IC MASTER 1984

Fairchild (Cont'd)

Manufacturer Device	Replacement Source	Device	IC Master Page
μA714	TeledyneP	1340	
	TI	OP-07	
μA715	AMD	715	
μA723	Hitachi	HA17723	
	Intersil	LM723	
	Motorola	**MC1723**	**3532**
	National	LM723	
	Raytheon	RC723	
		RM723	
	RCA	**CA723**	**3602**
		LM723	
	SGS	L123	
	Signetics	μA723	
	SiliconG	SG723	
	TI	μA723	
	Thomson-CSF	SFC2723	
μA725	AMD	LM108	
	AD	**AD108**	**3351**
	Fairchild	μA108	
	Intel	ISBC108	
	Intersil	ICL108	
		LM108	
	LinearTech	LM108	
		LM108A	
		OP-05	
	MicroPwr	MP5501	
		MP5505	
		MPLM108A	
		OP-08	
	Motorola	LM108	
	National	LM108	
		LM108A	
	NEC	μPC154	
	PMI	OP-01	
		OP-05	**3566**
		OP-06	
		OP-07	**3566**
		PM108	
		PM725	
	Raytheon	**OP-05**	**3592**
		OP-07	**3592**
		RC725	
		RM725	
	Signetics	LM108	
μA7327	SGS	TDA1170	
	Sprague	ULN-2270	
μA733	Hitachi	HA17733	
	Intersil	μA733	
	Motorola	MC1733	
		NE592	
	National	LM733	
	Signetics	μA733	
	SiliconG	SG733	
	TI	μA733	
μA739	**Exar**	**XR4739**	**3378**
	Fairchild	μA749	
	National	LM1303	
	Raytheon	**RC4739**	**3592**
	SGS	TBA231	
	TI	SN76131	
		SN76149	
μA741	**AD**	**AD741**	**3351**
	Fairchild	3871	
	Hitachi	HA17741	
	Intersil	AD741	
		ICL741	
	MicroPwr	MP5501	
		MP5502	**3529**
		OP-02	**3529**
	Mostek	MK3871	
	Motorola	LM741	
		MC1741	
	National	LM741	
	NEC	μPC151	
		μPC741	
	PMI	OP-01	
		OP-02	**3566**
		PM741	
		SSS741	
	Raytheon	RC741	
		RM741	
	RCA	CA3056	
		CA741	
	Signetics	μA741	
	SiliconG	SG300	
		SG741	
	TI	μA741	

(Continued)

Manufacturer Device	Replacement Source	Device	IC Master Page
μA741	Thomson-CSF	SFC2741	
	Toshiba	TA7504	
μA747	AMD	747	
	Hitachi	HA17747	
	MicroPwr	MPOP04	
	Motorola	MC1747	
	National	LM747	
	NEC	μPC251	
	PMI	**OP-04**	**3566**
		PM747	
	Raytheon	RC747	
		RM747	
	RCA	CA747	
	Signetics	μA747	
	SiliconG	SG747	
	TeledyneS	747	
	TI	μA747	
μA747-1	TI	μA747-1	
μA748	AMD	LM201	
	AD	AD201	
	Fairchild	μA201	
	Intersil	LM748	
		μA748	
	Motorola	LM201	
		MC1748	
	National	LM201	
		LM748	
	Plessey	SL748	
	RCA	CA201	
		CA748	
		LM748	
	SiliconG	SG201	
		SG748	
	TI	LM201	
		SN72748P	
		μA748	
	Thomson-CSF	SFC2201	
		SFC2748	
μA749	**Exar**	**XR4739**	**3378**
	Fairchild	μA739	
	National	LM1303	
	Raytheon	**RC4739**	**3592**
	SGS	TBA231	
	TI	SN76131	
		SN76149	
μA760	National	LM160	
	PMI	CMP-05	
μA776	**Harris**	**HA-2720**	**3416**
	Intersil	ICL8021	
		LM4250	
	Motorola	MC1776	
	National	LM4250	
	SiliconG	SG4250	
	Solitron	UC4250	
μA7805	AMD	LM309	
	Fairchild	μA309	
	Lambda	LLM309	
		LMC7805	
		LμA7805	
	Motorola	LM309	
		MC7805	**3531**
	National	LM309	
		LM7805	
	NEC	μPC7805	
	SGS	L7805	
		L7810	
	SiliconG	SG309	
		SG340-05	
		SG340-5	
	TI	μA7805	
	Thomson-CSF	SFC2309	
	Toshiba	TA78005	
μA7806	Lambda	LMC7806	
		LμA7806	
	Motorola	**MC7806**	**3531**
	SiliconG	SG340-6	
		SG7806	
	TI	μA7806	
μA7808	Lambda	LMC7808	
		LμA7808	
	Motorola	**MC7808**	**3531**
	NEC	μPC7808	
	SiliconG	SG340-8	
		SG7808	
	TI	LM340-8	
		μA7808	
μA7812	Lambda	LMC7812	
		LμA7812	
	Motorola	**MC7812**	**3531**

(Continued)

Manufacturer Device	Replacement Source	Device	IC Master Page
μA7812	National	LM7812	
	NEC	μPC7812	
	SGS	L7812	
	SiliconG	SG7812	
	TI	μA7812	
	Toshiba	TA78012	
μA7815	Fairchild	μA78L15	
	Lambda	LMC7815	
		LμA7815	
	Motorola	**MC7815**	**3531**
		MC78L15	
	National	LM340-15	
		LM340LA-15	
		LM340T-15	
		LM7815	
		LM78L15	
	NEC	μPC7815	
		μPC78L15	
	SGS	L7815	
	SiliconG	SG340-15	
		SG7815	
	TI	LM340-15	
		μA7815	
		μA78L15	
	Thomson-CSF	SFC2815	
	Toshiba	TA78015	
μA7818	Lambda	LMC7818	
	NEC	μPC7818	
	SiliconG	SG340-18	
		SG7818	
	TI	LM340-18	
		μA7818	
μA7824	Lambda	LMC7824	
		LμA7824	
	Motorola	**MC7824**	**3532**
	NEC	μPC7824	
	SGS	L7824	
	SiliconG	SG7824	
	TI	LM340-24	
		μA7824	
μA78H05	Fairchild	SH0323	
		SH323	
	Lambda	LAS1405	
		LAS1905	
	LinearTech	LM323	
	Micropac	M78H05	
	Motorola	**LM323**	**3531**
		MC78T05C	
	National	LM323	
	SiliconG	SG323	
μA78H12A	Lambda	LAS1412	
		LAS1912	
	Micropac	M78H12	
μA78HGA	Lambda	LAS14U	
		LAS19U	
	LinearTech	LM350	
	Motorola	**LM350**	**3532**
	National	LM350	
	SiliconG	SG350	
	TI	LM350	
μA78L02	Motorola	MC7802	
	TI	μA78L02	
μA78L02A	TI	μA78L02A	
μA78L05	Motorola	MC78L05	
	National	LM340LA-5	
		LM78L05	
	NEC	μPC78L05	
	TI	μA78L05	
	Thomson-CSF	SFC2805	
μA78L05A	TI	μA78L05A	
μA78L06	Motorola	MC78L06	
	TI	μA78L06	
		μA87L06	
μA78L06A	TI	μA78L06A	
μA78L08A	TI	μA78L08A	
μA78L09A	TI	μA78L09A	
μA78L10A	TI	μA78L10A	
μA78L12	Motorola	MC78L12	
	National	LM340LA-12	
		LM78L12	
	NEC	μPC78L12	
	TI	μA78L12	
	Thomson-CSF	SFC2812	
μA78L12A	TI	μA78L12A	
μA78L15	Fairchild	μA7815	
	Lambda	LMC7815	
		LμA7815	
	Motorola	**MC7815**	**3531**
		MC78L15	

(Continued)

Manufacturer Device	Replacement Source	Device	IC Master Page
μA78L15	National	LM340-15	
		LM340LA-15	
		LM340T-15	
		LM7815	
		LM78L15	
	NEC	μPC7815	
		μPC78L15	
	SGS	L7815	
	SiliconG	SG340-15	
		SG7815	
	TI	LM340-15	
		μA7815	
		μA78L15	
	Thomson-CSF	SFC2815	
	Toshiba	TA78015	
μA78L15A	TI	μA78L15A	
μA78M05	Motorola	MC78M05	
	National	LM341-5	
		LM342-05	
		LM78M05	
	NEC	μPC78M05	
	Sanyo	L78M05	
	TI	μA78M05	
μA78M06	Motorola	MC78M06	
	Sanyo	L78M06	
	TI	μA78M06	
μA78M08	Motorola	MC78M08	
	NEC	μPC78M08	
	Sanyo	L78M08	
	TI	μA78M08	
μA78M10	TI	μA78M10	
μA78M12	NEA	μPC78M12	
	Motorola	MC78M12	
	National	LM341-12	
		LM342-12	
		LM78M12	
	NEC	μPC78M12	
	Sanyo	L78M12	
μA78M15	Motorola	MC78M15	
	National	LM341-15	
		LM342-15	
		LM78M15	
	NEC	μPC78M15	
	Sanyo	L78M15	
μA78M24	Motorola	MC78M24	
	Sanyo	L78M24	
	TI	μA78M24	
μA78P05	Lambda	LAS3905	
	Micropac	M78P05	
		MLAS3905	
μA78S40	Motorola	μA78S40	
μA7902	Lambda	LMC7902	
		LμA7902	
	Motorola	MC7902	
μA7905	Fairchild	μA79M05	
	Lambda	LMC7905	
		LμA7905	
	Motorola	MC7905	
	National	LM320MP5	
		LM7905	
		LM79M05	
	SiliconG	SG120-5	
		SG320-05	
		SG320P-5	
		SG7905	
	TI	μA7905	
μA7908	Fairchild	MC7908	
		μA79M08	
	Lambda	LMC7908	
		LμA7908	
	Motorola	MC7908	
	SiliconG	SG7908	
	TI	μA7908	
		μA79M08	
μA7912	Fairchild	μA79M12	
	Lambda	LμA7912	
	Motorola	MC7912	
	National	LM320MP12	
		LM7912	
		LM79M12	
	SiliconG	SG320P-12	
		SG7912	
	TI	LM320-12	
		μA7912	
	Thomson-CSF	TDB2912	
μA7915	Lambda	LμA7915	
	Motorola	MC7915	
	National	LM320-15	
		LM320T15	
		LM7915	

(Continued)

◆ Discontinued

The manufacturers report their devices can be used as direct replacements.
Performance details often differ, so compare the specifications considering your requirements.

Fairchild (Cont'd)

Manufacturer Device	Replacement Source	Device	IC Master Page
μA7915	SiliconG	SG320-15	
		SG7915	
	TI	LM320-5	
		μA7915	
	Thomson-CSF		
		TDB2915	
μA796	Motorola	MC1496	
	National	LM1496	
	Plessey	SL1496	
	Signetics	MC1496	
	SiliconG	SG1496	
μA798	Motorola	MC3458	
		MC3558	
μA79HG	Lambda	LAS18μ	
μA79M05	Fairchild	μA7905	
	Lambda	LMC7905	
		LμA7905	
	Motorola	MC7905	
	National	LM320MP5	
		LM7905	
		LM79M05	
	SiliconG	SG120-5	
		SG320-05	
		SG320P-5	
		SG7905	
	TI	μA7905	
μA79M06	TI	μA79M06	
μA79M08	Fairchild	MC7908	
		μA7908	
	Lambda	LMC7908	
		LμA7908	
	Motorola	MC7908	
	SiliconG	SG7908	
	TI	μA7908	
		μA79M08	
μA79M12	Fairchild	μA7912	
	Lambda	LμA7912	
	Motorola	MC7912	
	National	LM320MP12	
		LM7912	
		LM79M12	
	SiliconG	SG320P-12	
		SG7912	
	TI	LM320-12	
		μA7912	
	Thomson-CSF		
		TDB2912	
μA8T26A	Motorola	MC8T26A	
	National	DS8T26A	
	Signetics	**N8T26A**	**876**
	TI	N8T26A	
μA8T28	National	DS8T28	
μA9636	TI	μA9636	
μA9636A	TI	μA9636A	
μA9637	TI	μA9637	
μA9637A	TI	μA9637A	
μA9638	TI	μA9638	
μA9708	Motorola	MC14443	
		MC14447	
μAF398	National	LF398	
		LM298	
	PMI	SMP-10	
	Signetics	**NE5537**	**3669**
μAF771	PMI	OP-16	
	RCA	**CA081**	**3596**
	TI	TL081	
	Thomson-CSF		
		TDB0351	
μAF772	Exar	XR072	
	PMI	OP-25	
	TI	TL072	
μAF774	**Exar**	**XR084**	**3377**
	RCA	**CA084**	**3596**
	TI	TL084	

Ferranti Electric

Manufacturer Device	Replacement Source	Device	IC Master Page
ULA1G000	Interdesign	1G000	
ULA1U000	Interdesign	1U000	
ULA2000	**Interdesign**	**MUA**	**4746**
ULA2C000	**Interdesign**	**MSA**	**4746**
ULA2H000	**Interdesign**	**MUC**	**4746**
ULA2L000	**Interdesign**	**MUB**	**4746**
ULA2U000	Interdesign	2U000	
ULA3U000	Interdesign	3U000	
ULA5C000	**Interdesign**	**MSB**	**4746**
ULA9C000	**Interdesign**	**MSC**	**4746**
ZN1060	Philips	TDA1060	
	Signetics	**NE5560**	**3652**

(Continued)

Manufacturer Device	Replacement Source	Device	IC Master Page
ZN1060	Signetics	TDA1060	
	Sprague	ULN-8160	
ZN423	AD	AD589	
	Intersil	**ICL8069**	**3521**
	MicroPwr	**MP5010**	**3529**
	National	LM113	
		LM313	
	TeledyneS	9491	
ZN425	Datel	ADC-MC8	
ZN433	Datel	ADC-856	
ZN447E	**Datel**	**ADC-847A**	**2863**
ZN447J	**Datel**	**ADC-847B**	**2863**
ZN449	Datel	ADC-847	
ZN449E	Datel	ADC-847C	
ZN458	Datel	VR-182	

Fujitsu Microelectronics, Inc.

Manufacturer Device	Replacement Source	Device	IC Master Page
MB2716	AMD	AM2716	
	Hitachi	HN462716	
	Intel	2716	
	Mostek	MK2716	
	Motorola	MCM2716	
	National	MM2716	
	NEC	μPD2716	
	OKI	**MSM2716**	**4118**
	Panasonic	MN2716	
	SGS	M2716	
	TI	TMS2516	
MB3759	Sprague	ULQ-8194	
MB3760	Sprague	ULQ-8195	
MB4111	SiliconSys	104	
MB4112	SiliconSys	105	
MB7117	MMI	6308	
	National	74S470	
	TI	TBP18SA2Z	
MB7117E-W	MMI	5308	
	National	54S470	
MB7118	MMI	6309	
	National	74S471	
	TI	TBP18S2Z	
MB7118E-W	MMI	5309	
	National	54S471	
MB7121	AMD	AM27S32	
	Fairchild	93452	
	Harris	HM7642	
	Hitachi	HN25044	
	MMI	6352-1	
	Motorola	MCM7642	
	National	**DM74S572**	**4057**
	NEC	μPB406	
	Signetics	N82S136	
	TI	**TBP24SA41**	**4239**
MB7121E-W	**Harris**	**HM7642-2**	**3948**
	Intel	M3605	
	MMI	5352-1	
	National	**DM54S572**	**4057**
	Signetics	S82S136	
	TI	**TBP24SA41M**	**4239**
MB7122	AMD	AM27S33	
	Fairchild	93453C	
	Harris	HM7643	
		HM7643A	
	MMI	5353-1	
		6353-1	
	Motorola	**MCM7643**	**4047**
	National	**DM74S573**	**4057**
	Signetics	N72HS137	
		N82S137	**4172**
		S82S195	**4182**
	TI	**TBP24S41**	
			542,4239
MB7122E-W	AMD	AM27S33M	
		AM27S41	**3907**
	Fairchild	93453M	
	Fujitsu	MB7152E-W	
	Harris	**HM7643-2**	**3948**
	MMI	**53S441**	**4026**
	Motorola	MCM7643M	
	National	**DM54S573**	**4057**
		DM54S573A	**4057**
	Signetics	S82HS137	
		S82S137	**532**
		S82S195	**4182**
	TI	**TBP24S41M**	
			542,4239
MB7123	AMD	AM27S28	
	MMI	6348-1	
	National	**DM74S473**	**4057**
	Signetics	N82S146	
	TI	**TBP28SA42**	**4245**

Manufacturer Device	Replacement Source	Device	IC Master Page
MB7123E-W	MMI	5348-1	
	National	**DM54S473**	**4057**
	Signetics	S82S146	
MB7124	AMD	AM27S29	
	Harris	HM7649	
	MMI	6349-1	
	Motorola	**MCM7649**	**4047**
	National	**DM74S472**	**4057**
	Raytheon	**29621**	**4131**
	Signetics	N82S147	
	TI	**TBP28S42**	
			542,4244
		TBP28S42M	
			542,4244
MB7124E-W	Fujitsu	MBM7124	
	MMI	5349-1	
	National	**DM54S472**	**4057**
	Signetics	**S82S147**	**532**
	TI	DM54S472	
MB7126	AMD	AM27S31	
	Fairchild	93448	
	Harris	HM7641	
	MMI	6341-1	
	Motorola	**MCM7641**	**4047**
	National	**DM74S474**	**4057**
	Signetics	N82S141	
	TI	**TBP28S46**	
			542,543,4245
MB7127	AMD	AM27S184	
	~~Harris~~	~~HM7684~~	
	Hitachi	HM25045	
	MMI	6388	
		6388-1	
	National	**DM87S184**	**4057**
	Signetics	N82S184	
	TI	**TBP24SA81**	**4240**
MB7127E-W	MMI	5388	
		5388-1	
	National	**DM77S184**	**4057**
MB7128	AMD	AM27S185	
	Harris	HM7685	
	Hitachi	HN25085	
	MMI	6389	
		6389-1	
		63S841	**4026**
	Motorola	**MCM7685**	**4047**
	National	**DM87S185**	**4057**
	Raytheon	29651	
		29651A	**4131**
	Signetics	N82HS185	
		N82S185	
	TI	**TBP24S81**	
			542,4239
MB7128E-W	**Harris**	**HM7685-2**	**3950**
	MMI	5389	
		5389-1	
	National	**DM77S185**	**4057**
	Raytheon	29651AM	
	Signetics	S82HS185	
		S82S185	**532**
	TI	SN54S454	
		TBP24S81M	
			542,4239
MB7131	AMD	AM27S180	
		AM27S280	
	Fairchild	93450	
		93Z450	
	Hitachi	HN25088	
	Intel	3608	
	MMI	6380-1	
	National	**DM87S180**	**4057**
		DM87S229	
	NEC	μPB408	
	Signetics	N82S180	
	TI	TBP28SA86	
MB7131E-W	MMI	5380-1	
	National	**DM77S180**	**4057**
	Signetics	S82S180	
	TI	**TBP28SA86M**	**4247**
MB7132	AMD	AM27PS181	
		AM27S181	
		AM27S281	
	Fairchild	93Z451	
		F93451	
	~~Harris~~	~~HM7681~~	
	Hitachi	HN25089	
	Intel	3628	
		3628A	
		3628B	
	MMI	6381-1	
	Motorola	**MCM7681**	**4047**
	National	**DM87S181**	**4057**

(Continued)

Manufacturer Device	Replacement Source	Device	IC Master Page
MB7132	National	DM87S228	
	NEC	μPB417	
	Raytheon	29631	
		29631A	**4131**
		29633	
	Signetics	82S181	
		N82HS181	
		N82S181	
	Supertex	SM82S181	
	TI	TBP28S86	
MB7132-W	**AMD**	**AM27S181M**	**3905**
	Fairchild	93451M	
	Fujitsu	MB7132E-W	
	Harris	**HM7681-2**	**3949**
	MMI	5381-1	
	National	**DM77S181**	**4057**
	Raytheon	29631AM	
	Signetics	S82HS181	
		S82S181	**532**
	TI	TBP28S86M	
MB7132E-W	**AMD**	**AM27S181M**	**3905**
	Fairchild	93451M	
	Fujitsu	MB7132-W	
	Harris	**HM7681-2**	**3949**
	MMI	5381-1	
	National	**DM77S181**	**4057**
	Raytheon	29631AM	
	Signetics	S82HS181	
		S82S181	**532**
	TI	TBP28S86M	
MB7134	AMD	AM27PS185	
	Fujitsu	MB7152	
	Harris	HM76165	
	MMI	**63S441**	**4026**
	Motorola	**MCM76165**	**4047**
	NEC	μPB426	
	Raytheon	29653	
	Signetics	N82HS195	
		N82S195	**4182**
MB7137	AMD	AM27S190	
	Fairchild	93510	
		93Z510	
	Fujitsu	MB7137E-W	
	Harris	HM76160	
	Hitachi	HN25168	
	MMI	**63S1681**	**4026**
	Motorola	MCM6160	
	National	**DM87S190**	**4057**
	NEC	μPB409	
	Raytheon	**29683**	**4131**
	Signetics	N82S190	
	TI	TBP28SA166	
MB7137E-W	AMD	AM27S190	
	Fairchild	93510	
		93Z510	
	Fujitsu	MB7137	
	Harris	HM76160	
	Hitachi	HN25168	
	MMI	**63S1681**	**4026**
	Motorola	MCM6160	
	National	**DM87S190**	**4057**
	NEC	μPB409	
	Raytheon	**29683**	**4131**
	Signetics	N82S190	
	TI	TBP28SA166	
MB7138	AMD	AM27PS191	
		AM27S191	
	Fairchild	93511	
		93Z511	
	Fujitsu	MB7138E-W	
	Harris	HM76161	
	Hitachi	HN25169	
	MMI	**63S1681**	**4026**
	Motorola	**MCM76161**	**4047**
	National	**DM87S191**	**4057**
	NEC	μPB429	
	Raytheon	**29681**	**4131**
		29681A	**4131**
	Signetics	N82S191	
	TI	**TBP28S166**	**4247**
MB7138E-W	AMD	AM27PS191	
		AM27S191	
	Fairchild	93511	
		93Z511	
	~~Fujitsu~~	~~MB7138~~	
	Harris	HM76161	
	Hitachi	HN25169	
	MMI	**63S1681**	**4026**
	Motorola	**MCM76161**	**4047**
	National	**DM87S191**	**4057**
	NEC	μPB429	
	Raytheon	**29681**	**4131**

(Continued)

◆ Discontinued

Bold face device numbers indicate manufacturers data is provided in the IC Master on the pages noted.

© IC MASTER 1984

Fujitsu Microelectronics, Inc. (Cont'd)

Manufacturer Device	Replacement Source	Device	IC Master Page
MB7138E-W	**Raytheon**	**29681A**	**4131**
	Signetics	N82S191	
	TI	**TBP28S166**	**4247**
MB7141	**Raytheon**	**29670**	**4130**
	Signetics	N82320	
MB7141E-W	Signetics	S82320	
MB7142	**AMD**	**AM27S43**	**3908**
	Harris	76321	
		HM76321	
	Intel	3632	
	MMI	**53S3281**	**4026**
		63S3281	**4026**
	National	87S321	
		DM87S321	**4057**
	Raytheon	**29671**	**4131**
	Signetics	N82S321	
MB7142E-W	**National**	**DM77S321**	**4057**
	Signetics	**S82S321**	**532**
MB7144	Harris	HM76641	
MB7151	**AMD**	**AM27S40**	**3907**
MB7152	AMD	AM27PS185	
	Fujitsu	MB7134	
	Harris	HM76165	
	MMI	**63S441**	**4026**
	Motorola	**MCM76165**	**4047**
	NEC	μPB426	
	Raytheon	29653	
	Signetics	N82HS195	
		N82S195	**4182**
MB7152E-W	AMD	AM27S33M	
		AM27S41	**3907**
	Fairchild	93453M	
	Fujitsu	MB7122E-W	
	Harris	**HM7643-2**	**3948**
	MMI	**53S441**	**4026**
	Motorola	MCM7643M	
	National	**DM54S573**	**4057**
		DM54S573A	**4057**
	Signetics	S82HS137	
		S82S137	**532**
		S82S195	**4182**
	TI	**TBP24S41M**	**542,4239**
MB8128	**AMD**	**AM9128**	**3917**
	Fairchild	F3528	
	Intel	2128	
	Motorola	MCM2016	
	National	NMC2116	
	OKI	**MSM5128**	**4118**
	Synertek	SY2128	
		SY2129	
	TI	TMS4016	
	Toshiba	TMM2016	
MB81416	IMS	IMS2620	
	TI	TMS4416	
MB8168	AMD	AM2168	
		AM2169	
	Hitachi	HM6168	
	IMS	IMS1420	
		IMS1421	
	Intel	2168	
	Mitsubishi	M5M2168	
	Synertek	**SY2168**	**4210**
	TI	TMS2168	
		TMS2169	
MB8243	AMD	8243	
	Intel	8243	
	NEC	μPD8243	
	Signetics	8243	
MB8264	Fairchild	F4164	
		F64K	
	Fujitsu	MB8266	
	Hitachi	HM4864	
	IMS	IMS2600	
	Intel	2164	
	Motorola	MCM6665	
	National	NMC4164	
	NEC	μPD4164	
	OKI	MSM3764	
	TI	TMS4164	
	Toshiba	TMM4164	
MB8265	Fujitsu	MB8265A	
		MB8266A	
	Motorola	MCM6664	
MB8266	Fairchild	F4164	
		F64K	
	Fujitsu	MB8264	
	Hitachi	HM4864	
	IMS	IMS2600	
		(Continued)	

Manufacturer Device	Replacement Source	Device	IC Master Page
MB8266	Intel	2164	
	Motorola	MCM6665	
	National	NMC4164	
	NEC	μPD4164	
	OKI	MSM3764	
	TI	TMS4164	
	Toshiba	TMM4164	
MB83256	AMD	AM92256	
	GI	R09256	
	Hitachi	HN613256	
	MicroPwr	MP2326	
	Mostek	MK38000	
	Motorola	MCM63256	
	NCR	23256	
	NEC	μPD2/83256	
		μPD23/83256	
	SMOS	SMM2326	
	Signetics	23256	
	Synertek	SY23256	
	Toshiba	TMM23256	
MB8404	Harris	HM6504	
	Intersil	IM6504	
	MicroPwr	MP6504	
	National	NMC6504	
	RCA	CDM5104	
	SMOS	SRM6504	
	Toshiba	TC5504	
MB8414	Harris	HM6514	
	Hitachi	HM4334	
	Intersil	IM6514	
	MicroPwr	MP6514	
	Mitsubishi	M58981	
	National	NMC6514	
	NEC	μPD6514	
	OKI	**MSM5115**	**4118**
	RCA	MWS5514	
	SMOS	SRM6514	
	Toshiba	TC5514	
MB8416	Harris	HM65162	
	Hitachi	HM6116	
	IDT	IDT6116	
	MicroPwr	MP6116	
	Mostek	MK6116	
	Motorola	MCM6116	
	NEC	**μPD446**	**4090**
	RCA	CDM6116	
	SMOS	SRM2016	
	Toshiba	TC5517A	
		TC5517B	
MB8417	Harris	HM65172	
	MicroPwr	MP6118	
	RCA	CDM6117	
	SMOS	SRM2017	
	Toshiba	TC5516A	
MB8418	Hitachi	HM6117	
	MicroPwr	MP6117	
	NEC	**μPD449**	**4093**
	RCA	CDM6118	
	SMOS	SRM2018	
	Toshiba	TC5518B	
MB8464	Hitachi	HM6264	
		HM6464	
	Mitsubishi	M5M5164	
		M5M5165	
	Toshiba	TC5564	
		TC5565	
MB85101A	EDI	EDH4464	
MB85103A	EDI	EDH4864	
MB8868A	AMI	S1602	
	Fairchild	3730	
		F6850	**1463**
	GI	AY3-1015	
	Hitachi	HD6850	
		HD68A50	
	Motorola	**MC6850**	**1505**
	National	MM5303	
	RCA	**CDP6402**	**1595**
	SMC	COM2017	
		COM2502H	
		COM8017	
	Thomson-CSF		
		EF6850	
	Western	TR1402	
		TR1602	
		TR1863	
MB8876	Siemens	SAB1791	
	SMC	FDC1791	
	Synertek	SY1791	
	Western	FD1791	
MB8877	Siemens	SAB1793	
	SMC	FDC1793	
		(Continued)	

Manufacturer Device	Replacement Source	Device	IC Master Page
MB8877	Synertek	SY1793	
	Western	FD1793	
MBL8035	AMD	8035	
	Intel	8035	
	National	INS8035	
	NEC	μPD8035	
	Signetics	SCN8035	
MBL8039	AMD	D8039	
	Intel	8039	
	National	INS8039	
	NEC	μPD8039	
	Signetics	SCN8039	
MBL8048	AMD	8048	
	Intel	8048	
	National	INS8048	
	NEC	μPD8048	
	Signetics	SCN8048	
	Toshiba	TMP8048	
MBL8049	Intel	8049	
	National	INS8049	
	NEC	μPD8049	
	Signetics	SCN8049	
MBL8086	AMD	D8086	
		MD8086	
	Intel	8086	
		MD8086	
	NEC	μPD8086	
MBL8088	AMD	8088	
	Intel	8088	
MBL80C31	Intel	80C31	
MBL80C51	Intel	80C51	
MBL8259	AMD	D8259	
	Intel	8259	
	National	INS8259	
	NEC	μPD8259	
MBL8282	Intel	8282	
	NEC	μPB8282	
MBL8283	AMD	AM8282	
		AM8283	
	Intel	8283	
	NEC	μPB8283	
MBL8284	AMD	8284	
	Intel	8284	
	NEC	μPB8284	
MBL8286	AMD	8304	
		DP8304	
	Intel	8286	
		8304	
	National	DP8304	
	NEC	μPB8286	
MBL8288	AMD	8288	
	Intel	8288	
	NEC	μPB8288	
MBL8289	Intel	8289	
MBM100470	**AMD**	**AM100470**	**3914**
	Fairchild	F100470	
MBM10415	**AMD**	**AM10415**	**3909**
	Fairchild	F10415	
	Fujitsu	MCM10415	
	Hitachi	HM2110	
		HM2112	
	Motorola	**MCM10146**	**4046**
	National	DM10415	
	Siemens	GXB10415	
	Signetics	10415	
MBM10422	Fairchild	F10422	
	Hitachi	HM10422	
	Motorola	**MCM10422**	**4047**
	National	DM10422	
	Signetics	10422	
MBM10470	AMD	AM10470	
	Fairchild	F10470	
	Hitachi	HM10470	
		HM2142	
	Motorola	**MCM10470**	**4047**
	National	DM10470	
	Signetics	10470	
MBM10474	AMD	AM10474	
	Fairchild	F10474	
	Signetics	10474	
MBM2147	AMD	AM2147	
	AMI	4017	
	Hitachi	HM4847	
	Intel	2147	
	Intersil	IM2147	
	ITT	4547	
	Motorola	MCM2147	
	National	MM2147	
	NEC	μPD2147	
	Synertek	SY2147	
	TI	TMS2147	
		(Continued)	

Manufacturer Device	Replacement Source	Device	IC Master Page
MBM2147	Toshiba	TMM315	
	Universal	UM2147	
MBM2147H	Intel	2147-3	
MBM2148	AMD	AM2148	
	Fairchild	93475	
	Fujitsu	MBM2149	
	Hitachi	HM6148	
	Intel	2148H	
		2149H	
	National	NMC2148	
	Synertek	SY2148	
		SY2149	
MBM2149	AMD	AM2148	
	Fairchild	93475	
	Fujitsu	MBM2148	
	Hitachi	HM6148	
	Intel	2148H	
		2149H	
	National	NMC2148	
	Synertek	SY2148	
		SY2149	
MBM27128	AMD	27128	
		AM27128	**3929**
	Intel	27128	
	Mitsubishi	M5L27128	
		M5L27C128	
	SEEQ	5143	
MBM2716	Intel	M2716	
	Mostek	MKB2716	
	National	MM2716M	
MBM2764	AMD	AM2764	
	Hitachi	HN482764	
	Intel	2764	
		M2764	
	Intersil	IM2764	
	Mitel	M5L2764	
	Mitsubishi	M5L2764	
	Mostek	MK2764	
	National	NMC2764	
	NEC	μPD2764	
	SEEQ	5133	
	Toshiba	TMM2764	
MBM7124	Fujitsu	MB7124E-W	
	MMI	5349-1	
	National	**DM54S472**	**4057**
	Signetics	**S82S147**	**532**
	TI	DM54S472	
MBM93415	AMD	AM93415	
	AMI	4015	
	Fairchild	93415	
	Hitachi	HM2510	
		HM2511	
	Intel	2115A	
	Motorola	MCM2115	
	Signetics	N82S10	
		S82S10	
	TI	SN54S314	
		SN74S314	
MBM93419	Fairchild	F93419	
MCM10415	**AMD**	**AM10415**	**3909**
	Fairchild	F10415	
	Fujitsu	MBM10415	
	Hitachi	HM2110	
		HM2112	
	Motorola	**MCM10146**	**4046**
	National	DM10415	
	Siemens	GXB10415	
	Signetics	10415	

General Instrument

Manufacturer Device	Replacement Source	Device	IC Master Page
5916	**Xicor**	**X2816**	**547,4267,4268**
AY3-1015	AMI	S1602	
	Fairchild	3730	
		F6850	**1463**
	Fujitsu	MB8868A	
	Hitachi	HD6850	
		HD68A50	
	Motorola	**MC6850**	**1505**
	National	MM5303	
	RCA	**CDP6402**	**1595**
	SMC	COM2017	
		COM2502H	
		COM8017	
	Thomson-CSF		
		EF6850	
	Western	TR1402	
		TR1602	
		TR1863	
AY3-8913	TI	SN76489	

◆ Discontinued

The manufacturers report their devices can be used as direct replacements.
Performance details often differ, so compare the specifications considering your requirements.

General Instrument (Cont'd)

Manufacturer Device	Replacement Source	Device	IC Master Page
AY5-8116	SMC	COM8116	
	Western	WD1943	
AY5-8136	SMC	COM8136	
AY5-9559	AMI	S2859	
	Mitel	MT5087	
	Mostek	MK5087	
	National	TP5087	
	Plessey	MV5087	
	TI	TCM5087	
◆AY6-1013	AMI	S1602	
	Fairchild	3730	
		F6850	**1463**
	Fujitsu	MB8868A	
	GI	AY3-1015	
	Hitachi	HD6850	
		HD68A50	
	Motorola	**MC6850**	**1505**
	National	MM5303	
	RCA	**CDP6402**	**1595**
	SMC	COM2017	
		COM2502H	
		COM8017	
	Thomson-CSF		
		EF6850	
	Western	TR1402	
		TR1602	
		TR1863	
ER1400	Mitsubishi	M5C1400	
	NCR	NCR1400	
	Nitron	NC1400	
ER1451	Mitsubishi	M58653	
ER2051	NCR	NCR2051	
	Nitron	NC7051	
ER3400	Hughes	HNVM3704	
	NCR	NCR3400	
	Nitron	NC7451	
◆ER5716	Hitachi	HN48016	
	Motorola	MCM2816	
	NCR	NCR2168	
◆ER5816	Hitachi	HN48016	
	Intel	2816	
	National	NMC2816	
	NCR	NCR2161	
	Rockwell	5213	
		52B13	
	SEEQ	5213	
		52B13	
	Xicor	**X2816A**	
		547,4267,4268	
ER5901	Nitron	NC7053	
	Xicor	X2201	
◆ER5916	Hitachi	HN48016	
	Intel	2816	
	National	NMC2816	
	NCR	NCR2161	
	Rockwell	5213	
		52B13	
	SEEQ	5213	
		52B13	
	Xicor	**X2816A**	
		547,4267,4268	
PIC1650A	Plessey	PIC1650A	
PIC1655A	Plessey	PIC1655A	
PIC1656	Plessey	PIC1656	
PIC7000	**TI**	**TMS7000**	**1704**
PIC7020	**TI**	**TMS7020**	**1704**
PIC7040	**TI**	**TMS7040**	**1704**
PIC7041	**TI**	**TMS7041**	**1704**
PIC70C00	**TI**	**TMS70C00**	**1704**
PIC70C20	**TI**	**TMS70C20**	**1704**
◆R03-8316	AMD	AM9218	
	Fairchild	3516	
		68316	
		F3516	
		F35316	
		F68316	**1464**
	GI	R03-9316	
	GTEMicro	2316	
	Intel	2316	
	Mostek	MK34000	
	Motorola	MCM68316	
		MCM68A316	
		MM2316	
	National	MM52116	
		MM5258	
	NCR	2316	
		NCR2316	
	NEC	μPD2316	
	OKI	**MSM2916**	**4118**
	Rockwell	R2316	

(Continued)

Manufacturer Device	Replacement Source	Device	IC Master Page
◆R03-8316	SGS	M2316	
	TI	SBP8316	
	Toshiba	TMM331A	
		TMM334	
R03-9316	AMD	AM9218	
	Fairchild	3516	
		68316	
		F3516	
		F35316	
		F68316	**1464**
	GTEMicro	2316	
	Intel	2316	
	Mostek	MK34000	
	Motorola	MCM68316	
		MCM68A316	
		MM2316	
	National	MM52116	
		MM5258	
	NCR	2316	
		NCR2316	
	NEC	μPD2316	
	OKI	**MSM2916**	**4118**
	Rockwell	R2316	
	SGS	M2316	
	TI	SBP8316	
	Toshiba	TMM331A	
		TMM334	
◆R03-9332	AMD	AM9232	
	AMI	S68322	
		S68A332	
	Fairchild	F3532	
	GI	R094132	
		T094132	
	GTEMicro	2332	
	Hitachi	HN46332	
	Intersil	IM7332	
	Motorola	MC68332	
		MCM68332	
		MCM68A332	**4048**
	National	MM52132	
	NCR	2332	
		NCR2332	
	NEC	**μPD2332**	**4100**
	OKI	**MSM2932**	**4118**
	RCA	**CDM5333**	**1593**
	Rockwell	R2332	
	SiliconG	SG3532	
	SSS	SCM23C32	
	SMC	ROM4732	
	Synertek	**SY2332**	**4211**
	TI	**TMS4732**	**4226**
	Toshiba	TM2332	
		TMM333	
	Universal	UM2332	
	VTI	**VT2332**	**4249**
◆R03-9333	AMD	AM9233	
	AMI	**S2333**	**3932**
	Fairchild	F3533	
	GI	R09433	
	Intel	2332	
	NCR	2333	
		NCR2333	
	RCA	**CDM5332**	**1593**
	Signetics	2332	
	SSS	SCM23C33	
	Synertek	**SY2333**	**4211**
	Universal	UM2333-45	
	VTI	**VT2333**	**4249**
◆R03-9367	AMD	AM9265	
	GI	R09864	
	GTEMicro	G5365	
	Hitachi	HN61364	
	Mostek	MK37000	
	RCA	CDM5365	
	Signetics	**2364-20**	**4196**
	Synertek	**SY2365**	**4211**
	Toshiba	TMM2365	
	VTI	**VT2365**	**4251**
R09128	AMD	AM92128	
	AMI	**S23128**	**3935**
	Hitachi	HN613128	
	Motorola	MCM63128	
	National	S2128	
	NCR	NCR23128	
	NEC	μPD2/83128	
		μPD23/83128	
	OKI	**MSM38128**	**4118**
	Signetics	**23128-30**	**4202**
	Synertek	SY23128	
	VTI	**VT23128**	**4252**
R09256	AMD	AM92256	
	Fujitsu	MB83256	

(Continued)

Manufacturer Device	Replacement Source	Device	IC Master Page
R09256	Hitachi	HN613256	
	MicroPwr	MP2326	
	Mostek	MK38000	
	Motorola	MCM63256	
	NCR	23256	
	NEC	μPD2/83256	
		μPD23/83256	
	SMOS	SMM2326	
	Signetics	23256	
	Synertek	SY23256	
	Toshiba	TMM23256	
R094132	AMD	AM9232	
	AMI	S68322	
		S68A332	
	Fairchild	F3532	
	GI	T094132	
	GTEMicro	2332	
	Hitachi	HN46332	
	Intersil	IM7332	
	Motorola	MC68332	
		MCM68332	
		MCM68A332	**4048**
	National	MM52132	
	NCR	2332	
		NCR2332	
	NEC	**μPD2332**	**4100**
	OKI	**MSM2932**	**4118**
	RCA	**CDM5333**	**1593**
	Rockwell	R2332	
	SiliconG	SG3532	
	SSS	SCM23C32	
	SMC	ROM4732	
	Synertek	**SY2332**	**4211**
	TI	**TMS4732**	**4226**
	Toshiba	TM2332	
		TMM333	
	Universal	UM2332	
	VTI	**VT2332**	**4249**
R09433	AMD	AM9233	
	AMI	**S2333**	**3932**
	Fairchild	F3533	
	Intel	2332	
	NCR	2333	
		NCR2333	
	RCA	**CDM5332**	**1593**
	Signetics	2332	
	SSS	SCM23C33	
	Synertek	**SY2333**	**4211**
	Universal	UM2333-45	
	VTI	**VT2333**	**4249**
R09464	AMI	S68364	
	GTEMicro	G5364	
	Intersil	IM7364	
	MicroPwr	MP2364	
	Mitsubishi	M5L2364	
	Mostek	MK36000	
	Motorola	**MCM68364**	
		4048,4054	
	National	MM5235	
	NCR	NCR2364	
	RCA	**CDM5364**	**1593**
	SMOS	SMM2364	
	SGS	M36000	
	Signetics	2664A	
	SSS	SCM23C64	
		SCM23C65	
	SMC	ROM36000	
	Synertek	**SY2364**	**4211**
	TI	**TMS4764**	**4225**
	Toshiba	TM2364	
	VTI	**VT2364**	**4250**
R09508	AMD	9240	
R09580	AMD	9280	
R09864	AMD	AM9265	
	GTEMicro	G5365	
	Hitachi	HN61364	
	Mostek	MK37000	
	RCA	CDM5365	
	Signetics	**2364-20**	**4196**
	Synertek	**SY2365**	**4211**
	Toshiba	TMM2365	
	VTI	**VT2365**	**4251**
T094132	AMD	AM9232	
	AMI	S68322	
		S68A332	
	Fairchild	F3532	
	GI	R094132	
	GTEMicro	2332	
	Hitachi	HN46332	
	Intersil	IM7332	
	Motorola	MC68332	
		MCM68332	

(Continued)

Manufacturer Device	Replacement Source	Device	IC Master Page
T094132	**Motorola**	**MCM68A332**	**4048**
	National	MM52132	
	NCR	2332	
		NCR2332	
	NEC	**μPD2332**	**4100**
	OKI	**MSM2932**	**4118**
	RCA	**CDM5333**	**1593**
	Rockwell	R2332	
	SiliconG	SG3532	
	SSS	SCM23C32	
	SMC	ROM4732	
	Synertek	**SY2332**	**4211**
	TI	**TMS4732**	**4226**
	Toshiba	TM2332	
		TMM333	
	Universal	UM2332	
	VTI	**VT2332**	**4249**

GTE Microcircuits

Manufacturer Device	Replacement Source	Device	IC Master Page
◆2114	AMD	AM9114	
	EMM-SESCO	2114	
	Fairchild	F2114	
	Hitachi	HM472114	
	Intel	2114	
		2114A	
	Intersil	IM2114	
	MicroPwr	MP2114	
	Motorola	MCM2114	
	National	MM2114	
	NEC	μPD2114	
	OKI	**MSM2114**	**4118**
	Panasonic	MN2114	
	SMOS	SRM2114	
	SSS	SCM21C14	
	Synertek	**SY2114**	**4210**
	TI	TMS4045	
	Toshiba	TMM314	
		TMM314A	
2316	AMD	AM9218	
	Fairchild	3516	
		68316	
		F3516	
		F35316	
		F68316	**1464**
	GI	R03-9316	
	Intel	2316	
	Mostek	MK34000	
	Motorola	MCM68316	
		MCM68A316	
		MM2316	
	National	MM52116	
		MM5258	
	NCR	2316	
		NCR2316	
	NEC	μPD2316	
	OKI	**MSM2916**	**4118**
	Rockwell	R2316	
	SGS	M2316	
	TI	SBP8316	
	Toshiba	TMM331A	
		TMM334	
2332	AMD	AM9232	
	AMI	S68322	
		S68A332	
	Fairchild	F3532	
	GI	R094132	
		T094132	
	Hitachi	HN46332	
	Intersil	IM7332	
	Motorola	MC68332	
		MCM68332	
		MCM68A332	**4048**
	National	MM52132	
	NCR	2332	
		NCR2332	
	NEC	**μPD2332**	**4100**
	OKI	**MSM2932**	**4118**
	RCA	**CDM5333**	**1593**
	Rockwell	R2332	
	SiliconG	SG3532	
	SSS	SCM23C32	
	SMC	ROM4732	
	Synertek	**SY2332**	**4211**
	TI	**TMS4732**	**4226**
	Toshiba	TM2332	
		TMM333	
	Universal	UM2332	
	VTI	**VT2332**	**4249**
2364-3	AMD	AM9264	
	AMI	S4264	
		S68A364	**3933**

(Continued)

◆ Discontinued

Bold face device numbers indicate manufacturers data is provided in the IC Master on the pages noted.

© IC MASTER 1984

GTE Microcircuits (Cont'd)

Manufacturer Device	Replacement Source	Device	IC Master Page
2364-3	Hitachi	HN48364	
	Mostek	MK36000-5	
	Motorola	MCM68365	
		MCM68366	
	National	MM52164	
	NCR	2364	
	NEC	UPD2/8364-30	
		μPD23/8364-30	
	OKI	MSM2965	
	Signetics	2664A-30	
	Synertek	**SY2364-3**	**4211**
	Toshiba	TMM2364	
	Weitek	SC8164	
◆G4104	Fairchild	F4104	
	Mitel	MD4104	
	Motorola	MC14504	
	National	MM4104	
	RCA	CD40109	
	SGS	HCF40109	
	Signetics	HEF4104	
◆G4320	ITT	DF320	
	Mitel	MT4320	
	Nitron	NC2320	
	Siliconix	DF320	
◆G5050	Mitel	MA5050	
◆G5100	Mitel	MA5100	
◆G5150	Mitel	MA5150	
G5364	AMD	AM92640	
	AMI	**S68B364**	**3933**
	Fairchild	**F3564-25**	**1465**
	Mostek	MK36000-4	
	Motorola	MCM67365-25	
	NEC	μPD2/8364-20	
		μPD23/8364-20	
	Signetics	2064-20	
	Synertek	SY2364-2	
G5365	AMD	AM9265	
	GI	R09864	
	Hitachi	HN61364	
	Mostek	MK37000	
	RCA	CDM5365	
	Signetics	**2364-20**	**4196**
	Synertek	**SY2365**	**4211**
	Toshiba	TMM2365	
	VTI	**VT2365**	**4251**
G65SC02	**Synertek**	**SY65C02**	**1696**
G65SC06	**Synertek**	**SY65C06**	**1696**
G65SC12	**Synertek**	**SY65C12**	**1696**
G65SC13	**Synertek**	**SY65C13**	**1696**
G65SC14	**Synertek**	**SY65C14**	**1696**
G65SC15	**Synertek**	**SY65C15**	**1696**
G74SC137	Mitel	MD74SC137	
	Plessey	MV74SC137	
	SPI	SP74SC137	
G74SC138	Mitel	MD74SC138	
	Plessey	MV74SC138	
	RCA	CDP1873	
	SPI	SP74SC138	
G74SC139	Mitel	MD74SC139	
	Plessey	MV74SC139	
	SPI	SP74SC139	
◆G74SC237	Mitel	MD74SC237	
◆G74SC238	Mitel	MD74SC238	
	SPI	SP74SC238	
◆G74SC239	Mitel	MD74SC239	
	SPI	SP74SC239	
G74SC240	Mitel	MD74SC240	
	Plessey	MV74SC240	
	SPI	SP74SC240	
G74SC241	Mitel	MD74SC241	
	Plessey	MV74SC241	
	SPI	SP74SC241	
G74SC244	Mitel	MD74SC244	
	Plessey	MV74SC244	
	SPI	SP74SC244	
G74SC245	Fairchild	74LS245	
	Mitel	MD74SC245	
	MMI	**SN74LS245**	**804**
	Motorola	SN74LS245	
	National	DM74LS245	
	Plessey	MV74SC245	
	SPI	SP74SC245	
	Signetics	74LS245	
	NST245		**876**
	TI	SN74LS245	
G74SC373	Mitel	MD74SC373	
	Plessey	MV74SC373	
	SPI	SP74SC373	
G74SC374	Mitel	MD74SC374	
	Plessey	MV74SC374	
	SPI	SP74SC374	
G74SC533	Mitel	MD74SC533	
G74SC534	Mitel	MD74SC234	
G74SC540	Mitel	MD74SC540	
	SPI	SP74SC540	
G74SC541	Mitel	MD74SC541	
	SPI	SP74SC541	
G74SC563	Mitel	MD74SC563	
G74SC564	Mitel	MD74SC564	
G74SC573	Mitel	MD74SC573	
	SPI	SP74SC573	
G74SC574	Mitel	MD74SC574	
	SPI	SP74SC574	
G8860	Mitel	MT8860	
	Plessey	MB8860	
~~G8865~~	~~Mitel~~	~~MT8865~~	
	Mostek	MK8865	
	Plessey	MV8865	
G8870	Mitel	MT8870	
G8912	Intel	2912	
		ID2912	
	Mostek	MK5912	
		MK8912	
	National	TP3040	
	Plessey	MV8912	
	TI	TCM2912	
		TCM2912B	

Harris Semiconductor

Manufacturer Device	Replacement Source	Device	IC Master Page
76321	**AMD**	**AM27S43**	**3908**
	Fujitsu	MB7142	
	Harris	HM76321	
	Intel	3632	
	MMI	**53S3281**	**4026**
		63S3281	**4026**
	National	87S321	
		DM87S321	**4057**
	Raytheon	**29671**	**4131**
	Signetics	N82S321	
◆HA-1488	AMD	MC1488	
	Exar	**XR1488**	**3384**
	Fairchild	μA1488	
	Hitachi	HD75188	
	Motorola	**MC1488**	**3064**
	National	DS1488	
	Raytheon	RM1488	
	Signetics	MC1488	
	SiliconG	SG1488	
	TI	MC1488	
		SN75188	
HA-23080	**RCA**	**CA3080**	**3596**
HA-2425	AD	AD583	
	Datel	**SHM-IC-1**	**2864**
	PMI	SMP-10	
		SMP-11	
	TeledyneP	4856	
HA-2500	Intersil	HA2500	
HA-2502	**Datel**	**AM-450-2M**	**2864**
	Intersil	HA2502	
HA-2505	AD	AD540	
	Burr-Brown	3503	
	Datel	**AM-450-2**	**2864**
	Intersil	HA2505	
		HA2525	
	MicroPwr	MP5501	
	PMI	OP-01	
◆HA-2507	Intersil	HA2507	
HA-2510	Intersil	HA2510	
HA-2512	Intersil	HA2512	
HA-2515	Intersil	HA2515	
◆HA-2517	Intersil	HA2517	
HA-2522	**Datel**	**AM-452-2M**	**2864**
	Intersil	HA2522	
◆HA-2527	Intersil	HA2527	
HA-2539	**Signetics**	**NE5539**	**3678**
	TeledyneP	1342	
HA-2540	TeledyneP	1341	
HA-2600	Intersil	HA2600	
	Motorola	MC1556	
	SiliconG	SG1556	
	TeledyneP	1326	
	TI	MC1556	
HA-2602	**Datel**	**AM-460-2M**	**2864**
	Intersil	HA2602	
HA-2605	**Datel**	**AM-460-2**	**2864**
	Intersil	HA2605	
	Motorola	MC1456	
	SiliconG	SG1456	
	TI	MC1456	
◆HA-2607	Intersil	HA2607	
HA-2620	AD	AD507	
	Burr-Brown	3508	
	Datel	**AM-462-1**	**2864**
		AM-462-2	**2864**
	Harris	HA-2622	
		HA-2625	
	Intersil	HA2620	
		HA2622	
		HA2625	
HA-2622	AD	AD507	
	Burr-Brown	3508	
	Datel	**AM-462-1**	**2864**
		AM-462-2	**2864**
	Harris	**HA-2620**	**3408**
		HA-2625	
	Intersil	HA2620	
		~~HA2622~~	
		HA2625	
HA-2625	AD	AD507	
	Burr-Brown	3508	
	Datel	**AM-462-1**	**2864**
		AM-462-2	**2864**
	Harris	**HA-2620**	**3408**
		HA-2622	
	Intersil	HA2620	
		HA2622	
		HA2625	
◆HA-2627	Intersil	HA2627	
HA-2640	**Datel**	**AM-464-2M**	**2864**
	Exar	**XR1527A**	**3381**
	Motorola	MC1536	
	National	LM143	
		LM1536	
	SiliconG	SG1536	
HA-2645	**Datel**	**AM-464-2**	**2864**
	Motorola	MC1436	
		MC1439	
	National	LM1436	
		LM343	
	SiliconG	SG1436	
	TeledyneP	1332	
HA-2650	AMD	AM1558	
	Exar	XR1558	
	Fairchild	μA1558	
	Motorola	MC1558	
		MC4558	
		RC1558	
	National	LM1558	
	PMI	**OP-14**	**3566**
		PM1558	
	Raytheon	RC1558	
		RM1558	
		RM4558	
	RCA	CA1558	
		LM1558	
		SSS1558	
	Signetics	MC1558	
	SiliconG	SG1558	
	TI	MC1558	
		RM4558	
HA-2655	AMD	AM1458	
	Exar	XR1458	
		XR4558	
	Fairchild	μA1458	
	Hitachi	HA17458	
	MicroPwr	MPOP14	
	Motorola	MC1458	
		MC4558C	
		RC4558	
	National	LM1458	
	NEC	μPC1458	
		μPC4558	
	PMI	PM1458	
	Raytheon	RC1458	
		RC4558	**3592**
	RCA	CA1458	
		LM1458	
		RC4558	
		SSS1458	
	Sanyo	LA6458A	
	Signetics	MC1458	
		NE4558	
	SiliconG	SG1458	
	TI	MC1458	
		RC4558	
◆HA-2665	AMD	AM1458	
	Exar	XR1458	
		XR4558	
	Fairchild	μA1458	
	Harris	HA-2655	
	Hitachi	HA17458	
◆HA-2665	MicroPwr	MPOP14	
	Motorola	MC1458	
		MC4558C	
		RC4558	
	National	LM1458	
	NEC	μPC1458	
		μPC4558	
	PMI	PM1458	
	Raytheon	RC1458	
		RC4558	**3592**
	RCA	CA1458	
		LM1458	
		RC4558	
		SSS1458	
	Sanyo	LA6458A	
	Signetics	MC1458	
		NE4558	
	SiliconG	SG1458	
	TI	MC1458	
		RC4558	
HA-2700	Datel	AM-470-2	
		AM-470-2C	**2865**
		AM-470-2M	**2865**
	Harris	HA-2704	
		HA-2705	
	TeledyneP	1323	
HA-2704	Datel	AM-470-2	
		AM-470-2C	**2865**
		AM-470-2M	**2865**
	Harris	HA-2700	
		HA-2705	
	TeledyneP	1323	
HA-2705	Datel	AM-470-2	
		AM-470-2C	**2865**
		AM-470-2M	**2865**
	Harris	HA-2700	
		HA-2704	
	TeledyneP	1323	
HA-2720	Fairchild	μA776	
	Intersil	ICL8021	
		LM4250	
	Motorola	MC1776	
	National	LM4250	
	SiliconG	SG4250	
	Solitron	UC4250	
HA-2900	AD	AD510	
		AD517	
		ADOP-07	**3351**
	Burr-Brown	3510	
	Datel	**AM-430**	**2864**
		AM-490-2	
	Fairchild	μA714	
	Harris	HA-2905	
		HA-5130	
		HA-5135	
	MicroPwr	MP517	
		MP5505	
		MP5507	
		OP-07	**3529**
	National	LH0044	
	NEC	μPC725	
	PMI	**OP-05**	**3566**
		OP-07	**3566**
	Raytheon	**OP-05**	**3592**
		OP-07	**3592**
	TeledyneP	1340	
	TI	OP-07	
HA-2905	AD	AD510	
		AD517	
		ADOP-07	**3351**
	Burr-Brown	3510	
	Datel	**AM-430**	**2864**
		AM-490-2	
	Fairchild	μA714	
	Harris	HA-2900	
		HA-5130	
		HA-5135	
	MicroPwr	MP517	
		MP5505	
		MP5507	
		OP-07	**3529**
	National	LH0044	
	NEC	μPC725	
	PMI	**OP-05**	**3566**
		OP-07	**3566**
	Raytheon	**OP-05**	**3592**
		OP-07	**3592**
	TeledyneP	1340	
	TI	OP-07	
HA-4741	AMD	LM348	
	Exar	**XR4212**	**3378**
	Fairchild	μA348	

(Continued)

◆ Discontinued

The manufacturers report their devices can be used as direct replacements.
Performance details often differ, so compare the specifications considering your requirements.

Harris Semiconductor (Cont'd)

Manufacturer Device	Replacement Source	Device	IC Master Page
HA-4741	MicroPwr	MP5511	
	Motorola	MC4741	
	National	LM348	
	NEC	μPC4741	
	PMI	OP-11	
	Raytheon	HA4741	
		LM348	
		RC4156	
	TI	LM348	
	Thomson-CSF		
		TDB0111	
		TDB0148	
HA-5033	National	LH0033	
	TeledyneP	1359	
HA-5100	**Datel**	**AM-410-2M**	**2864**
HA-5105	Datel	AM-410-2	
HA-5110	**Datel**	**AM-411-2M**	**2864**
HA-5115	Datel	AM-411-2	
HA-5130	AD	AD510	
		AD517	
		ADOP-07	**3351**
	Burr-Brown	3510	
	Datel	**AM-430**	**2864**
		AM-490-2	
	Fairchild	μA714	
	Harris	HA-2900	
		HA-2905	
		HA-5135	
	MicroPwr	MP517	
		MP5505	
		MP5507	
		OP-07	**3529**
	National	LH0044	
	NEC	μPC725	
	PMI	**OP-05**	**3566**
		OP-07	**3566**
	Raytheon	**OP-05**	**3592**
		OP-07	**3592**
	TeledyneP	1340	
	TI	OP-07	
HA-5135	AD	AD510	
		AD517	
		ADOP-07	**3351**
	Burr-Brown	3510	
	Datel	**AM-430**	**2864**
		AM-490-2	
	Fairchild	μA714	
	Harris	HA-2900	
		HA-2905	
		HA-5130	
	MicroPwr	MP517	
		MP5505	
		MP5507	
		OP-07	**3529**
	National	LH0044	
	NEC	μPC725	
	PMI	**OP-05**	**3566**
		OP-07	**3566**
	Raytheon	**OP-05**	**3592**
		OP-07	**3592**
	TeledyneP	1340	
	TI	OP-07	
HA-516	**Burr-Brown**	**MPC800**	**2850**
	Datel	**MX-1616**	**2864**
HA-5160	TeledyneP	1344	
HA-5162	TeledyneP	1345	
HA-518	**Burr-Brown**	**MPC801**	**2850**
	Datel	**MX-818**	**2864**
HA-5180	TeledyneP	1346	
HA-5180A	TeledyneP	1347	
HA-5190	TeledyneP	1343	
HA-5195	TeledyneP	1343	
HA-5320	Datel	SHM-20	
HA-5320-2	**Datel**	**SHM-20M**	**2864**
HA-5320-5	**Datel**	**SHM-20C**	**2864**
HA-OP07	AD	AD-OP07	
		OP-07	
	LinearTech	OP-07	
	PMI	**OP-07**	**3566**
	Raytheon	**OP-07**	**3592**
	TI	OP-07	
HA5320	AMD	AM6420	
HD4702	Fairchild	F4702	
HD6101	Intersil	IM6101	
HI-508	AD	AD7501	
	Burr-Brown	MPC8S	
	Datel	**MX-808**	**2864**
	Harris	HI508	
		HI508A	

(Continued)

Manufacturer Device	Replacement Source	Device	IC Master Page
HI-508	Intersil	IH6108	
	MicroPwr	MP7501	
		MP7508	
	National	LF11508	
		LF13508	
	PMI	DMX-88	
		MUX-08	
		MUX-88	
	Siliconix	DG508	
		DG508A	
	TeledyneP	4554	
HI-509	**Burr-Brown**	**MPC4D**	**2850**
	Datel	**MXD-409**	**2864**
	Harris	HI509	
		HI509A	
	Intersil	IH6208	
	MicroPwr	MP7509	
	National	LF11509	
		LF13509	
	PMI	MUX-24	
	Siliconix	DG509	
		DG509A	
	TeledyneP	4553	
HI-5320	TeledyneP	TP-4086	
HI-5618	TeledyneP	TP-4084	
HI-5680I	TeledyneP	TP-4087	
HI-5680V	TeledyneP	TP-4086	
HI-7541	AD	AD7541	
	Datel	**DAC-7541**	**2863**
	Harris	HI17541	
	HybridSys	HS7541	
	Intersil	AD7541	
		ICL7541	
	MicroPwr	MP7541	
		MP7621	
	TeledyneP	TP-7541	
		TP7541	
	TeledyneS	7541	
HI-DAC16	TeledyneP	TP-4088	
HI17541	AD	AD7541	
	Datel	**DAC-7541**	**2863**
	Harris	HI-7541	
	HybridSys	HS7541	
	Intersil	AD7541	
		ICL7541	
	MicroPwr	MP7541	
		MP7621	
	TeledyneP	TP-7541	
		TP7541	
	TeledyneS	7541	
HI1818A	AD	AD7503	
	Datel	**MV-808**	**2864**
	MicroPwr	MP7503	
HI1828A	AD	AD7502	
	Hitachi	HD14052	
	MicroPwr	MP7502	
	National	CD4052	
	SSS	SCL4052	
	Solitron	CM4052	
	Toshiba	TC4052	
	Datel	**MVD-409**	**2864**
HI1840	**Burr-Brown**	**MPC16S**	**2850**
	Datel	**MV-1606**	**2864**
		MX-1606	**2864**
	Harris	HI506	
		HI506A	
	Intersil	IH6116	
	PMI	MUX-16	
HI200	AD	ADG200	
	Intersil	IH200	
	MicroPwr	MP200	
	PMI	SW-05	
	Siliconix	DG200	
HI201	AD	ADG201	
	MicroPwr	MP201	
	National	LF11201	
		LF13201	
HI300	Siliconix	DG300	
HI301	Siliconix	DG301	
HI302	Siliconix	DG302	
HI303	Siliconix	DG303	
HI304	Siliconix	DG304	
HI305	Siliconix	DG305	
HI306	Siliconix	DG306	
HI307	Siliconix	DG307	
HI381	Harris	HI5048	
	Intersil	DG181	
		IH5048	
	Siliconix	DG181	
		DG381	
HI384	Harris	HI5049	
	Intersil	DG184	

(Continued)

Manufacturer Device	Replacement Source	Device	IC Master Page
HI384	Intersil	IH5049	
	Siliconix	DG184	
		DG384	
HI387	Harris	HI5050	
	Intersil	DG187	
		IH5050	
	Siliconix	DG187	
		DG387	
HI390	Siliconix	DG390	
HI5040	Intersil	IH5040	
	Siliconix	DG5040	
HI5041	Intersil	IH5041	
	Siliconix	DG5041	
HI5042	Intersil	DG188	
		IH5042	
	Siliconix	DG188	
		DG5042	
	TI	TL188	
HI5043	Intersil	DG191	
		IH5043	
	Siliconix	DG191	
		DG243	
		DG5043	
HI5044	Intersil	IH5044	
	Siliconix	DG5044	
HI5045	Intersil	DG185	
		IH5045	
	Siliconix	DG185	
		DG5045	
	TI	TL185	
HI5046	Intersil	IH5046	
HI5047	Intersil	IH5047	
HI5048	**Harris**	**HI381**	**2877**
	Intersil	DG181	
		IH5048	
	Siliconix	DG181	
		DG381	
HI5049	**Harris**	**HI384**	**2877**
	Intersil	DG184	
		IH5049	
	Siliconix	DG184	
		DG384	
HI5050	**Harris**	**HI387**	**2877**
	Intersil	DG187	
		IH5050	
	Siliconix	DG187	
		DG387	
HI5051	Intersil	DG190	
		IH5051	
	Siliconix	DG190	
HI506	**Burr-Brown**	**MPC16S**	**2850**
	Datel	**MV-1606**	**2864**
		MX-1606	**2864**
	Harris	HI1840	
		HI506A	
	Intersil	IH6116	
	PMI	MUX-16	
HI506A	**Burr-Brown**	**MPC16S**	**2850**
	Datel	**MV-1606**	**2864**
		MX-1606	**2864**
	Harris	HI1840	
		HI506	
	Intersil	IH6116	
	PMI	MUX-16	
HI507	AD	AD7507	
	Burr-Brown	**MPC8D**	**2850**
	Datel	**MVD-807**	**2864**
		MXD-807	**2864**
	Harris	HI507A	
	Intersil	IH6216	
	MicroPwr	MP7507	
	PMI	MUX-28	
	Siliconix	DG507	
		DG507A	
	TeledyneP	4551	
HI507A	AD	AD7507	
	Burr-Brown	**MPC8D**	**2850**
	Datel	**MVD-807**	**2864**
		MXD-807	**2864**
	Harris	HI507	
	Intersil	IH6216	
	MicroPwr	MP7507	
	PMI	MUX-28	
	Siliconix	DG507	
		DG507A	
	TeledyneP	4551	
HI508	AD	AD7501	
	Burr-Brown	MPC8S	
	Datel	**MX-808**	**2864**
	Harris	HI-508	
		HI508A	
	Intersil	IH6108	

(Continued)

Manufacturer Device	Replacement Source	Device	IC Master Page
HI508	MicroPwr	MP7501	
		MP7508	
	National	LF11508	
		LF13508	
	PMI	DMX-88	
		MUX-08	
		MUX-88	
	Siliconix	DG508	
		DG508A	
	TeledyneP	4554	
HI508A	AD	AD7501	
	Burr-Brown	MPC8S	
	Datel	**MX-808**	**2864**
	Harris	HI-508	
		HI508	
	Intersil	IH6108	
	MicroPwr	MP7501	
		MP7508	
	National	LF11508	
		LF13508	
	PMI	DMX-88	
		MUX-08	
		MUX-88	
	Siliconix	DG508	
		DG508A	
	TeledyneP	4554	
HI509	**Burr-Brown**	**MPC4D**	**2850**
	Datel	**MXD-409**	**2864**
	Harris	HI-509	
		HI509A	
	Intersil	IH6208	
	MicroPwr	MP7509	
	National	LF11509	
		LF13509	
	PMI	MUX-24	
	Siliconix	DG509	
		DG509A	
	TeledyneP	4553	
HI509A	**Burr-Brown**	**MPC4D**	**2850**
	Datel	**MXD-409**	**2864**
	Harris	HI-509	
		HI509	
	Intersil	IH6208	
	MicroPwr	MP7509	
	National	LF11509	
		LF13509	
	PMI	MUX-24	
	Siliconix	DG509	
		DG509A	
	TeledyneP	4553	
HI5618	TeledyneP	4084	
HI562	AMD	AM6012	
	AD	AD562	
	Burr-Brown	DAC862	
	Datel	DAC-562	
	MCE	MCE-6012	
	MicroPwr	MP562	
	Motorola	**AD562**	**3069**
	NEC	μPC6012	
		μPC648	
	PMI	DAC-312	
		DAC312B12	
	Raytheon	DAC-6012	
		DAC6012	
	Signetics	**AM6012**	**3605**
	TeledyneP	4068	
HI565A	AD	AD565A	
	TeledyneP	4089	
HIDAC16	TeledyneP	4088	
HM6100	Intersil	IM6100	
HM6116	AD	AD515	
	Burr-Brown	3528	
	IDT	IDT6116	
	MicroPwr	MP6116	
	Mitsubishi	M5K8725	
	OKI	**MSM2128**	**4118**
	SMOS	SMM2016	
	Toshiba	TC5516	
◆HM6322	Intersil	IM6312	
◆HM6402	AMI	S1602	
	Fairchild	3730	
		F6850	**1463**
	Fujitsu	MB8868A	
	GI	AY3-1015	
	Hitachi	HD6850	
		HD68A50	
	Motorola	**MC6850**	**1505**
	National	MM5303	
	RCA	**CDP6402**	**1595**
	SMC	COM2017	
		COM2502H	
		COM8017	

(Continued)

◆ Discontinued

Bold face device numbers indicate manufacturers data is provided in the IC Master on the pages noted.

© IC MASTER 1984

Harris Semiconductor (Cont'd)

Manufacturer Device	Replacement Source	Device	IC Master Page
◆HM6402	Thomson-CSF		
		EF6850	
	Western	TR1402	
		TR1602	
		TR1863	
HM6503	National	NMC6503	
HM6504	Fujitsu	MB8404	
	Intersil	IM6504	
	MicroPwr	MP6504	
	National	NMC6504	
	RCA	CDM5104	
	SMOS	SRM6504	
	Toshiba	TC5504	
HM6508	AMI	S6508	
	Fairchild	4736B	
	Intel	2125A	
	Motorola	MCM2125	
	National	MM74C929	
		NMC6508	
	NEC	μPD443	
	SSS	SCM21C02	
	Toshiba	TC5508	
HM6514	Fujitsu	MB8414	
	Hitachi	HM4334	
	Intersil	IM6514	
	MicroPwr	MP6514	
	Mitsubishi	M58981	
	National	NMC6514	
	NEC	μPD6514	
	OKI	**MSM5115**	**4118**
	RCA	MWS5514	
	SMOS	SRM6514	
	Toshiba	TC5514	
HM65162	Fujitsu	MB8416	
	Hitachi	HM6116	
	IDT	IDT6116	
	MicroPwr	MP6116	
	Mostek	MK6116	
	Motorola	MCM6116	
	NEC	**μPD446**	**4090**
	RCA	CDM6116	
	SMOS	SRM2016	
	Toshiba	TC5517A	
		TC5517B	
HM65172	Fujitsu	MB8417	
	MicroPwr	MP6118	
	RCA	CDM6117	
	SMOS	SRM2017	
	Toshiba	TC5516A	
HM6518	Intersil	IM6518-1	
	National	MM74C930	
HM6561	Intersil	IM6561	
HM6758	TI	TMS2508	
		TMS2758	
HM7602	AMD	AM27S18	
	MMI	6330-1	
		63S080	**4026**
	National	**DM74S188**	**4057**
		DM7588	
		DM8577	
	Signetics	N82S23	
	TI	TBP18SA030	
		TBPSA030M	
HM7603	AMD	AM27LS19	
		AM27S19	
	MMI	5331-1	
		53S081	**4026**
		6331-1	
		63S081	**4026**
	National	**DM74S288**	**4057**
		DM8578	
	Signetics	N82S123	
		S82S123	**532**
	TI	**TBP18S030**	
			542,4237
HM7608	Signetics	N82S2708	
		S82S2708	**532**
	TI	**TBP28S2708**	**4248**
HM7610	AMD	AM27S20	
	Fairchild	93417	
	MMI	6300-1	
		63S140	**4026**
	National	**DM74S387**	**4057**
	Signetics	N82S126	
	TI	**TBP24SA10**	
			542,4238
HM7610-2	Intel	M3601	
	MMI	5300-1	
		53S140	**4026**
		(Continued)	

Manufacturer Device	Replacement Source	Device	IC Master Page
HM7610-2	**National**	**DM54S387**	**4057**
	Signetics	**S82S126**	**532**
	TI	**TBP24SA10M**	
			542,4238
HM7611	AMD	AM27S11	
		AM27S21	
	Intersil	IM5623	
	MMI	6301-1	
		63S141	**4026**
	National	**DM74S287**	**4057**
	Signetics	N82S129	
	TI	**TBP24S10**	
			542,4238
HM7611-2	Intel	M3621	
	MMI	5301-1	
		53S141	**4026**
	National	**DM54S287**	**4057**
	Signetics	**S82S129**	**532**
HM76160	AMD	AM27S190	
	Fairchild	93510	
		93Z510	
	Fujitsu	MB7137	
		MB7137E-W	
	Hitachi	HN25168	
	MMI	**63S1681**	**4026**
	Motorola	MCM6160	
	National	**DM87S190**	**4057**
	NEC	μPB409	
	Raytheon	**29683**	**4131**
	Signetics	N82S190	
	TI	TBP28SA166	
HM76161	AMD	AM27PS191	
		AM27S191	
	Fairchild	93511	
		93Z511	
	Fujitsu	MB7138	
		MB7138E-W	
	Hitachi	HN25169	
	MMI	**63S1681**	**4026**
	Motorola	**MCM76161**	**4047**
	National	**DM87S191**	**4057**
	NEC	μPB429	
	Raytheon	**29681**	**4131**
		29681A	**4131**
	Signetics	N82S191	
	TI	**TBP28S166**	**4247**
◆HM76164	**AMD**	**AM27S40**	**3907**
	Fujitsu	MB7151	
HM76165	AMD	AM27PS185	
	Fujitsu	MB7134	
		MB7152	
	MMI	**63S441**	**4026**
	Motorola	**MCM76165**	**4047**
	NEC	μPB426	
	Raytheon	29653	
	Signetics	N82HS195	
		N82S195	**4182**
HM7620	AMD	AM27S12	
	Fairchild	93436	
	MMI	6305-1	
		63S240	**4026**
	National	**DM74S570**	**4057**
	Signetics	N82S130	
HM7621	AMD	AM27S13	
	Fairchild	93446	
	Intel	3622	
	MMI	6306-1	
		63S241	**4026**
	Motorola	**MCM7621**	**4047**
	National	**DM74S571**	**4057**
	Raytheon	**29611**	**4131**
	Signetics	N82S131	
	TI	SN74S571	
HM76321	**AMD**	**AM27S43**	**3908**
	Fujitsu	MB7142	
	Harris	76321	
	Intel	3632	
	MMI	**53S3281**	**4026**
		63S3281	**4026**
	National	87S321	
		DM87S321	**4057**
	Raytheon	**29671**	**4131**
	Signetics	N82S321	
HM7640	AMD	AM27S30	
	Fairchild	93438	
	MMI	6340-1	
	National	**DM74S475**	**4057**
		DM77S475	
		DM87S475	
	Signetics	N82S140	
	TI	**TBP28SA46**	**4245**

Manufacturer Device	Replacement Source	Device	IC Master Page
HM7641	AMD	AM27S31	
	Fairchild	93448	
	Fujitsu	MB7126	
	MMI	6341-1	
	Motorola	**MCM7641**	**4047**
	National	**DM74S474**	**4057**
	Signetics	N82S141	
	TI	**TBP28S46**	
			542,543,4245
HM7642	AMD	AM27S32	
	Fairchild	93452	
	Fujitsu	MB7121	
	Hitachi	HN25044	
	MMI	6352-1	
	Motorola	MCM7642	
	National	**DM74S572**	**4057**
	NEC	μPB406	
	Signetics	N82S136	
	TI	**TBP24SA41**	**4239**
HM7642-2	Fujitsu	MB7121E-W	
	Intel	M3605	
	MMI	5352-1	
	National	**DM54S572**	**4057**
	Signetics	S82S136	
	TI	**TBP24SA41M**	**4239**
HM7643	AMD	AM27S33	
	Fairchild	93453C	
	Fujitsu	MB7122	
	Harris	HM7643A	
	MMI	5353-1	
		6353-1	
	Motorola	**MCM7643**	**4047**
	National	**DM74S573**	**4057**
	Signetics	N72HS137	
		N82S137	**4172**
		S82S195	**4182**
	TI	**TBP24S41**	
			542,4239
HM7643-2	AMD	AM27S33M	
		AM27S41	**3907**
	Fairchild	93453M	
	Fujitsu	MB7122E-W	
		MB7152E-W	
	MMI	**53S441**	**4026**
	Motorola	MCM7643M	
	National	**DM54S573**	**4057**
		DM54S573A	**4057**
	Signetics	S82HS137	
		S82S137	**532**
		S82S195	**4182**
	TI	**TBP24S41M**	
			542,4239
HM7643A	AMD	AM27S33	
	Fairchild	93453C	
	Fujitsu	MB7122	
	Harris	HM7643	
	MMI	5353-1	
		6353-1	
	Motorola	**MCM7643**	**4047**
	National	**DM74S573**	**4057**
	Signetics	N72HS137	
		N82S137	**4172**
		S82S195	**4182**
	TI	**TBP24S41**	
			542,4239
HM7647R	AMD	AM27S15	
	Signetics	N82S115	
◆HM7648	AMD	AM27S28	
	Fujitsu	MB7123	
	MMI	6348-1	
	National	**DM74S473**	**4057**
	Signetics	N82S146	
	TI	**TBP28SA42**	**4245**
HM7649	AMD	AM27S29	
	Fujitsu	MB7124	
	MMI	6349-1	
	Motorola	**MCM7649**	**4047**
	National	**DM74S472**	**4057**
	Raytheon	**29621**	**4131**
	Signetics	N82S147	
	TI	**TBP28S42**	
			542,4244
		TBP28S42M	
			542,4244
HM76641	Fujitsu	MB7144	
◆HM7680	AMD	AM27S180	
		AM27S280	
	Fairchild	93450	
		93Z450	
	Fujitsu	MB7131	
	Hitachi	HN25088	
	Intel	3608	
		(Continued)	

Manufacturer Device	Replacement Source	Device	IC Master Page
◆HM7680	MMI	6380-1	
	National	**DM87S180**	**4057**
		DM87S229	
	NEC	μPB408	
	Signetics	N82S180	
	TI	TBP28SA86	
HM7681	AMD	AM27PS181	
		AM27S181	
		AM27S281	
	Fairchild	93Z451	
		F93451	
	Fujitsu	MB7132	
	Hitachi	HN25089	
	Intel	3628	
		3628A	
		3628B	
	MMI	6381-1	
	Motorola	**MCM7681**	**4047**
	National	**DM87S181**	**4057**
		DM87S228	
	NEC	μPB417	
	Raytheon	29631	
		29631A	**4131**
		29633	
	Signetics	825181	
		N82HS181	
		N82S181	
	Supertex	SM82S181	
	TI	TBP28S86	
HM7681-2	**AMD**	**AM27S181M**	**3905**
	Fairchild	93451M	
	Fujitsu	MB7132-W	
		MB7132E-W	
	MMI	5381-1	
	National	**DM77S181**	**4057**
	Raytheon	29631AM	
	Signetics	S82HS181	
		S82S181	**532**
	TI	TBP28S86M	
HM7684	AMD	AM27S184	
	Fujitsu	MB7127	
	Hitachi	HM25045	
	MMI	6388	
		6388-1	
	National	**DM87S184**	**4057**
	Signetics	N82S184	
	TI	**TBP24SA81**	**4240**
HM7685	AMD	AM27S185	
	Fujitsu	MB7128	
	Hitachi	HN25085	
	MMI	6389	
		6389-1	
		63S841	**4026**
	Motorola	**MCM7685**	**4047**
	National	**DM87S185**	**4057**
	Raytheon	29651	
		29651A	**4131**
	Signetics	N82HS185	
		N82S185	
	TI	**TBP24S81**	
			542,4239
HM7685-2	Fujitsu	MB7128E-W	
	MMI	5389	
		5389-1	
	National	**DM77S185**	**4057**
	Raytheon	29651AM	
	Signetics	S82HS185	
		S82S185	**532**
	TI	SN54S454	
		TBP24S81M	
			542,4239
HM7686	National	DM87S186	
◆HM7687	National	DM87S187	
HPL77209/16L8	AMD	AMPAL16L8	
	MMI	PAL16L8	
	National	DMPAL16L8	
	TI	SN54PL16L8	
LF147	National	LF147	
LF153	National	LF153	
LF247	National	LF247	
LF253	National	LF253	
LF347	Exar	XR074	
	Motorola	MC34004	
	National	LF347	
	TI	TL074	
		TL084C	
	Thomson-CSF		
		TDB0084	
		TDB0084A	
		TDB0347	
LF353	National	LF353	

◆ Discontinued

The manufacturers report their devices can be used as direct replacements.
Performance details often differ, so compare the specifications considering your requirements.

Harris Semiconductor (Cont'd)

Manufacturer Device	Replacement Source	Device	IC Master Page
MPL77215/16H8			
	AMD	AMPAL26H8	

Hitachi America, Ltd.

Manufacturer Device	Replacement Source	Device	IC Master Page
HA1110	RCA	CA3001	
	SiliconG	SG3001	
HA1127	Fairchild	μA3045	
	National	LM3045	
	Plessey	SL3045	
		SL3145	
	RCA	**CA3045**	**3601**
	Sanyo	LA3045	
	SiliconG	SG3045	
		SG3821	
	Sprague	ULS-2045	
HA1137	Hitachi	HA1230	
	National	CA3089	
		LM3089	
	RCA	CA3089	
	Sanyo	LA1230	
		LA3089	
	SGS	TCA3089	
		TDA1200	
	Signetics	CA3089	
	Telefunken	U417	
	TI	SN76689	
HA1148	RCA	CA3217	
HA1156	Exar	XR1310	
	National	LM1310	
	RCA	CA1310	
	Sanyo	LA3301	
		LA3350	
	Sprague	ULN-3810	
	TI	SN76115	
	Toshiba	TA7157	
HA1197	Sanyo	LA1240	
HA1199	Sprague	ULN-2249	
HA1230	Hitachi	HA1137	
	National	CA3089	
		LM3089	
	RCA	CA3089	
	Sanyo	LA1230	
		LA3089	
	SGS	TCA3089	
		TDA1200	
	Signetics	CA3089	
	Telefunken	U417	
	TI	SN76689	
HA12402	Sprague	ULN-2204	
	Telefunken	TDA1083	
	Toshiba	TA7613	
HA1303	Fairchild	μA709	
	Motorola	MC1709	
	National	LM1709	
		LM709	
	NEC	μPC255	
		μPC55	
	Raytheon	RC709	
		RM709	
	RCA	CA3038	
	TI	μA709	
	Thomson-CSF		
		SFC2709	
	Toshiba	TA7502	
HA1364	Fairchild	TDA1194	
	RCA	CA1190	
	SGS	TDA1190	
		TDA1190Z	
		TDA3190	
	Sprague	ULN-2290	
HA17301	Motorola	LM2900	
		MC3301	
	National	LM2900	
		LM3301	
	Raytheon	LM2900	
		RC3301	
	TI	LM2900	
HA17458	AMD	AM1458	
	Exar	XR1458	
		XR4558	
	Fairchild	μA1458	
	Harris	HA-2655	
	MicroPwr	MPOP14	
	Motorola	MC1458	
		MC4558C	
		RC4558	
	National	LM1458	
	NEC	μPC1458	
		(Continued)	
HA17458	NEC	μPC4558	
	PMI	PM1458	
	Raytheon	RC1458	
		RC4558	**3592**
	RCA	CA1458	
		LM1458	
		RC4558	
		SSS1458	
	Sanyo	LA6458A	
	Signetics	MC1458	
		NE4558	
	SiliconG	SG1458	
	TI	MC1458	
		RC4558	
HA17555	Cherry	CS555	
	Exar	XR555	
	Fairchild	μA555	
	Motorola	MC1455	
	National	LM555	
	NEC	μPC1555	
	Raytheon	RC555	
	RCA	CA355	
		CA555	**3604**
	Sanyo	LB8555	
	Signetics	NE555	
	SiliconG	SG555	
	TI	NE555	
HA17723	Fairchild	μA723	
	Intersil	LM723	
	Motorola	**MC1723**	**3532**
	National	LM723	
	Raytheon	RC723	
		RM723	
	RCA	**CA723**	**3602**
		LM723	
	SGS	L123	
	Signetics	μA723	
	SiliconG	SG723	
	TI	μA723	
	Thomson-CSF		
		SFC2723	
HA17733	Fairchild	μA733	
	Intersil	μA733	
	Motorola	MC1733	
		NE592	
	National	LM733	
	Signetics	μA733	
	SiliconG	SG733	
	TI	μA733	
HA17741	**AD**	**AD741**	**3351**
	Fairchild	3871	
		μA741	
	Intersil	AD741	
		ICL741	
	MicroPwr	MP5501	
		MP5502	**3529**
		OP-02	**3529**
	Mostek	MK3871	
	Motorola	LM741	
		MC1741	
	National	LM741	
	NEC	μPC151	
		μPC741	
	PMI	OP-01	
		OP-02	**3566**
		PM741	
		SSS741	
	Raytheon	RC741	
		RM741	
	RCA	CA3056	
		CA741	
	Signetics	μA741	
	SiliconG	SG300	
		SG741	
	TI	μA741	
	Thomson-CSF		
		SFC2741	
	Toshiba	TA7504	
HA17747	AMD	747	
	Fairchild	μA747	
	MicroPwr	MPOP04	
	Motorola	MC1747	
	National	LM747	
	NEC	μPC251	
	PMI	**OP-04**	**3566**
		PM747	
	Raytheon	RC747	
		RM747	
	RCA	CA747	
	Signetics	μA747	
	SiliconG	SG747	
		(Continued)	
HA17747	TeledyneS	747	
	TI	μA747	
HA17901	AMD	LM339	
		LM339A	
	Fairchild	μA339	
	Motorola	LM339	
	National	LM339	
	NEC	μPC339	
	PMI	CMP-04	
		PM339A	
	Raytheon	LM339	
	RCA	**CA339**	**3599**
		CA339A	**3599**
		LM339	
	SiliconG	SG339	
	TI	LM339	
	Thomson-CSF		
		TDB0139	
HA17902	Fairchild	μA2902	
	Motorola	LM2902	
	National	LM2902	
	NEC	μPC2902	
	Raytheon	LM2902	
	TI	LM2902	
HA1902	Fairchild	75S24	
	Motorola	MC7524	
	National	DS75S24	
	Signetics	7524	
	SiliconG	SG7524	
	TI	SN75224	
		SN7524	
HD10101	Fairchild	F10101	
	Motorola	MC10101	
	Signetics	**10101**	**858**
HD10102	Fairchild	F10102	
	Motorola	MC10102	
	Signetics	**10102**	**858**
HD10104	Fairchild	F10104	
	Motorola	MC10104	
	Signetics	**10104**	**858**
HD10105	Fairchild	F10105	
	Motorola	MC10105	
	Signetics	**10105**	**858**
HD10106	Fairchild	F10106	
	Motorola	MC10106	
	Signetics	**10106**	**858**
HD10107	Fairchild	F10107	
	Motorola	MC10107	
	Signetics	**10107**	**858**
HD10109	Fairchild	F10109	
	Motorola	MC10109	
	Signetics	**10109**	**858**
HD10110	Fairchild	F10110	
	Motorola	MC10110	
	Signetics	**10110**	**858**
HD10111	Fairchild	F10111	
	Motorola	MC10111	
	Signetics	**10111**	**858**
HD10116	Fairchild	F10116	
	Motorola	MC10116	
	National	DM10116	
	Signetics	**10116**	**858**
HD10117	Fairchild	F10117	
	Motorola	MC10117	
	Signetics	**10117**	**858**
HD10118	Fairchild	F10118	
	Motorola	MC10118	
	Signetics	**10118**	**858**
HD10119	Fairchild	F10119	
	Motorola	MC10119	
	Signetics	**10119**	**858**
HD10121	Fairchild	F10121	
	Motorola	MC10121	
	Signetics	**10121**	**858**
HD10124	Fairchild	F10124	
	Motorola	MC10124	
	Signetics	**10124**	**858**
HD10125	Fairchild	F10125	
	Motorola	MC10125	
	Signetics	**10125**	**858**
HD10130	Fairchild	F10130	
	Motorola	MC10130	
	Signetics	**10130**	**858**
HD10131	Fairchild	F10131	
	Motorola	MC10131	
	Signetics	**10131**	**858**
HD10132	Fairchild	F10132	
	Motorola	MC10132	
	Signetics	**10132**	**858**
HD10133	Fairchild	F10133	
	Motorola	MC10133	
	Signetics	**10133**	**858**
HD10134	Fairchild	F10134	
	Motorola	MC10134	
	Signetics	**10134**	**858**
HD10136	Fairchild	F10136	
	Motorola	MC10136	
	Signetics	**10136**	**858**
HD10148	**Motorola**	**MCM10148**	**4046**
	NEC	μPB10148	
	Signetics	10148	
	TI	SN10148	
HD10160	Fairchild	F10160	
	Motorola	MC10160	
	Signetics	**10160**	**858**
HD10161	Fairchild	F10161	
	Motorola	MC10161	
	NEC	μPB10161	
	Signetics	**10161**	**858**
HD10162	Fairchild	F10162	
	Motorola	MC10162	
	Signetics	**10162**	**858**
HD10164	Fairchild	F10164	
	Motorola	MC10164	
	Signetics	**10164**	**858**
	TI	SN10164	
HD10165	Fairchild	F10165	
	Motorola	MC10165	
	Signetics	**10165**	**858**
HD10174	Fairchild	F10174	
	Motorola	MC10174	
	Signetics	10174	858
	TI	SN10174	
HD10175	Fairchild	F10175	
	Motorola	MC10175	
	Signetics	**10175**	**858**
	TI	SN10175	
HD10179	Fairchild	F10179	
	Motorola	MC10179	
	Signetics	**10179**	**858**
HD10180	Fairchild	F10180	
	Motorola	MC10180	
	Signetics	**10180**	**858**
HD10181	Fairchild	F10181	
	Motorola	MC10181	
	Signetics	**10181**	**858**
HD103461	Motorola	MC3461	
HD14001	Fairchild	F4001	
	Motorola	MC14001	
	National	CD4001	
		MM74C02	
	OKI	MSM4001	
	RCA	CD4001	
	Sanyo	LC4001B	
	SGS	HCF4001	
	Signetics	HEF4001	
	SSS	SCL4001	
	Solitron	CM4001	
	Toshiba	TC4001	
HD14002	Fairchild	F4002	
	Motorola	MC14002	
	National	CD4002	
	RCA	CD4002	
	SGS	HCF4002	
	Signetics	HEF4002	
	SSS	SCL4002	
	Solitron	CM4002	
	Toshiba	TC4002	
HD14006	Fairchild	F4006	
	National	CD4006	
	SGS	HCF4006	
	Signetics	HEF4006	
	SSS	SCL4006	
	Solitron	CM4006	
	Toshiba	TC4006	
HD14007	Fairchild	F4007	
	Motorola	MC14007	
	National	CD4007	
	RCA	CD4007	
	SGS	HCF4007	
	Signetics	HEF4007	
	SSS	SCL4007	
	Solitron	CM4007	
	Toshiba	TC4007	
HD14008	Fairchild	F4008	
	Motorola	MC14008	
	National	CD4008	
		MM74C83	
	RCA	CD4008	
	SGS	HCF4008	
	Signetics	HEF4008	
	SSS	SCL4008	
	Solitron	CM4008	
	Toshiba	TC4008	

‡ Discontinued

Bold face device numbers indicate manufacturers data is provided in the IC Master on the pages noted.

© IC MASTER 1984

Hitachi America, Ltd. (Cont'd)

Manufacturer Device	Replacement Source	Device	IC Master Page
HD14009	National	CD4009	
	RCA	CD4049	
	SGS	HCF4009	
	SSS	SCL4009	
	Solitron	CM4009	
	Toshiba	TC4009	
HD14010	National	CD4010	
	RCA	CD4010	
	SGS	HCF4010	
	SSS	SCL4010	
	Solitron	CM4010	
	Toshiba	TC4010	
HD14011	Fairchild	F4011	
	Motorola	MC14011	
	National	CD4011	
		MM74C00	
	OKI	MSM4011	
	RCA	CD4011	
	Sanyo	LC4011	
	SGS	HCF4011	
	Signetics	HEF4011	
	SSS	SCL4011	
	Solitron	CM4011	
	Toshiba	TC4011	
HD14012	Fairchild	F4012	
	Motorola	MC14012	
	National	CD4012	
	RCA	CD4012	
	SGS	HCF4012	
	Signetics	HEF4012	
	SSS	SCL4012	
	Solitron	CM4012	
	Toshiba	TC4012	
HD14013	Fairchild	F4013	
	Motorola	MC14013	
	National	CD4013	
		MM74C74	
	OKI	MSM4013	
	RCA	CD4013	
	Sanyo	LC4013	
	SGS	HCF4013	
	Signetics	HEF4013	
	SSS	SCL4013	
	Solitron	CM4013	
	Toshiba	TC4013	
HD14014	Fairchild	F4014	
	Motorola	MC14014	
	National	CD4014	
	RCA	CD4014	
	SGS	HCF4014	
	Signetics	HEF4014	
	SSS	SCL4014	
	Solitron	CM4014	
	Toshiba	TC4014	
HD14015	Fairchild	F4015	
	Motorola	MC14015	
	National	CD4015	
		MM74C164	
	OKI	MSM4015	
	RCA	CD4015	
	Sanyo	LC4015	
	SGS	HCF4015	
	Signetics	HEF4015	
	SSS	SCL4015	
	Solitron	CM4015	
	Toshiba	TC4015	
HD14016	Fairchild	F4016	
		F4066	
	Hitachi	HD14066	
	Motorola	MC14016	
		MC14066	
	National	CD4016	
		CD4066	
	RCA	CD4016	
		CD4066	
	Sanyo	LC4016	
		LC4066	
	SGS	HCF4016	
		HCF4066	
	Signetics	**HEF4016**	**864**
		HEF4066	
	SSS	SCL4016	
		SCL4066	
	Solitron	CM4016	
		CM4066	
		HCF4016	
	Toshiba	TC4016	
		TC4066	
HD14017	Fairchild	F4017	
	Motorola	MC14017	
		(Continued)	

Manufacturer Device	Replacement Source	Device	IC Master Page
HD14017	National	CD4017	
	RCA	CD4017	
	SGS	HCF4017	
	Signetics	HEF4017	
	SSS	SCL4017	
	Solitron	CM4017	
	Toshiba	TC4017	
HD14018	Fairchild	F4018	
	Motorola	MC14018	
	National	CD4018	
	RCA	CD4018	
	SGS	HCF4018	
	Signetics	HEF4018	
	SSS	SCL4018	
	Solitron	CM4018	
	Toshiba	TC4018	
HD14020	Fairchild	F4020	
	~~Motorola~~	~~MC14020~~	
	National	CD4020	
	RCA	CD4020	
	SGS	HCF4020	
	Signetics	HEF4020	
	SSS	SCL4020	
	Solitron	CM4020	
	Toshiba	TC4020	
HD14021	Fairchild	F4021	
	Motorola	MC14021	
	National	CD4021	
	RCA	CD4021	
	SGS	HCF4021	
	Signetics	HEF4021	
	SSS	SCL4021	
	Toshiba	TC4021	
HD14022	Fairchild	F4022	
	Motorola	MC14022	
	National	CD4022	
	RCA	CD4022	
	SGS	HCF4022	
	Signetics	HEF4022	
	SSS	SCL4022	
	Solitron	CM4022	
	Toshiba	TC4022	
HD14023	Fairchild	F4023	
	Motorola	MC14023	
	National	CD4023	
		MM74C10	
	RCA	CD4023	
	SGS	HCF4023	
	Signetics	HEF4023	
	SSS	SCL4023	
	Solitron	CM4023	
	Toshiba	TC4023	
HD14024	Fairchild	F4024	
	Motorola	MC14024	
	National	CD4024	
	RCA	CD4024	
	SGS	HCF4024	
	Signetics	HEF4024	
	SSS	SCL4024	
	Solitron	CM4024	
	Toshiba	TC4024	
HD14025	Fairchild	F4025	
	Motorola	MC14025	
	National	CD4025	
	RCA	CD4025	
	SGS	HCF4025	
	Signetics	HEF4025	
	SSS	SCL4025	
	Solitron	CM4025	
	Toshiba	TC4025	
HD14027	Fairchild	F4027	
	Motorola	MC14027	
	National	CD4027	
		MM74C76	
	OKI	MSM4027	
	RCA	CD4027	
	Sanyo	LC4027	
	SGS	HCF4027	
	Signetics	HEF4027	
	SSS	SCL4027	
	Solitron	CM4027	
HD14028	Fairchild	F4028	
	Motorola	MC14028	
	National	CD4028	
		MM74C42	
	OKI	MSM4028	
	Sanyo	LC4028	
	SGS	HCF4028	
	Signetics	HEF4028	
	SSS	SCL4028	
	Solitron	CM4028	
	Toshiba	TC4028	

Manufacturer Device	Replacement Source	Device	IC Master Page
HD14032	Motorola	MC14032	
	RCA	CD4032	
	SGS	HCF4032	
	Solitron	CM4032	
	Toshiba	TC4032	
HD14034	Fairchild	F4034	
	Motorola	MC14034	
	National	CD4034	
	RCA	CD4034	
	SGS	HCF4034	
	SSS	SCL4034	
	Solitron	CM4034	
	Toshiba	TC4034	
HD14035	Fairchild	F4035	
	Motorola	MC14035	
	RCA	CD4035	
	SGS	HCF4035	
	Signetics	HEF4035	
	Solitron	CM4035	
	Toshiba	TC4035	
HD14038	Motorola	MC14038	
	RCA	CD4038	
	SGS	HCF4038	
	Solitron	CM4038	
	Toshiba	TC4038	
HD14040	Fairchild	F4040	
	Motorola	MC14040	
	National	CD4040	
	RCA	CD4040	
	SGS	HCF4040	
	Signetics	HEF4040	
	SSS	SCL4040	
	Solitron	CM4040	
	Toshiba	TC4040	
HD14042	Fairchild	F4042	
	Motorola	MC14042	
	National	CD4042	
	RCA	CD4042	
	SGS	HCF4042	
	Signetics	HEF4042	
	SSS	SCL4042	
	Solitron	CM4042	
	Toshiba	TC4042	
HD14043	Motorola	MC14043	
	~~National~~	~~CD4043~~	
	RCA	CD4043	
	SGS	HCF4043	
	Signetics	HEF4043	
	SSS	SCL4043	
	Solitron	CM4043	
	Toshiba	TC4043	
HD14044	Fairchild	F4044	
	Motorola	MC14044	
	National	CD4044	
	RCA	CD4044	
	SGS	HCF4044	
	Signetics	HEF4044	
	Solitron	CM4044	
	Toshiba	TC4044	
HD14046	Fairchild	F4046	
	Motorola	MC14046	
	National	CD4046	
	RCA	CD4046	
	SGS	HCF4046	
	SSS	SCL4046	
	Solitron	CM4046	
HD14049	Fairchild	F4049	
	Motorola	MC14049	
	National	CD4049	
	OKI	MSM4049	
	RCA	CD4049	
	Sanyo	LC4049	
	SGS	HCF4049	
	Signetics	HEF4049	
	SSS	SCL4049	
	Solitron	CM4049	
	Toshiba	TC4049	
HD14050	Fairchild	F4050	
	Motorola	MC14050	
	National	CD4050	
	RCA	CD4050	
	SGS	HCF4050	
	Signetics	HEF4050	
	SSS	SCL4050	
	Solitron	CM4050	
	Toshiba	TC4050	
HD14051	Fairchild	F4051	
	Motorola	MC14051	
	National	CD4051	
	RCA	CD4051	
	SGS	HCF4051	
	Signetics	HEF4051	
		(Continued)	

Manufacturer Device	Replacement Source	Device	IC Master Page
HD14051	SSS	SCL4051	
	Solitron	CM4051	
	Toshiba	TC4051	
HD14052	AD	AD7502	
	MicroPwr	MP7502	
	National	CD4052	
	SSS	SCL4052	
	Solitron	CM4052	
	Toshiba	TC4052	
HD14053	Fairchild	F4053	
	Motorola	MC14053	
	National	CD4053	
	RCA	CD4053	
	SGS	HCF4053	
	Signetics	HEF4053	
	SSS	SCL4053	
	Solitron	CM4053	
	~~Toshiba~~	~~TC4053B~~	
HD14066	Fairchild	F4016	
		F4066	
	Hitachi	HD14016	
	Motorola	MC14016	
		MC14066	
	National	CD4016	
		CD4066	
	RCA	CD4016	
		CD4066	
	Sanyo	LC4016	
		LC4066	
	SGS	HCF4016	
		HCF4066	
	~~Signetics~~	**~~HEF4016~~**	**864**
		HEF4066	
	SSS	SCL4016	
		SCL4066	
	Solitron	CM4016	
		CM4066	
		HCF4016	
	Toshiba	TC4016	
		TC4066	
HD14068	Fairchild	F4068	
	Motorola	MC14068	
	RCA	CD4068	
	SGS	HCF4068	
	Signetics	HEF4068	
	SSS	SCL4068	
	Solitron	CM4068	
	Toshiba	TC4068	
HD14069	Fairchild	F4069	
	Motorola	MC14069	
	National	CD4069	
		MM54C04	
		MM74C04	
	OKI	MSM4069	
	RCA	CD4069	
	Sanyo	LC4069	
	SGS	HCF4069	
	Signetics	HEF4069	
	SSS	SCL4069	
		SCL4449	
	Solitron	CM4069	
	Toshiba	TC4069	
HD14070	Fairchild	F4070	
	Motorola	MC14070	
	National	CD4070	
		MM74C86	
	RCA	CD4070	
	SGS	HCF4070	
	Signetics	HEF4070	
	SSS	SCL4070	
	Solitron	CM4070	
HD14071	Fairchild	F4071	
	Motorola	MC14071	
	National	CD4071	
		MM74C32	
	OKI	MSM4071	
	RCA	CD4071	
	Sanyo	LC4071	
	SGS	HCF4071	
	Signetics	HEF4071	
	SSS	SCL4071	
	Solitron	CM4071	
	Toshiba	TC4071	
HD14072	Fairchild	F4072	
	Motorola	MC14072	
	National	CD4072	
	RCA	CD4072	
	SGS	HCF4072	
	Signetics	HEF4072	
	SSS	SCL4072	
	Toshiba	TC4072	

◆ Discontinued

The manufacturers report their devices can be used as direct replacements.
Performance details often differ, so compare the specifications considering your requirements.

Hitachi America, Ltd. (Cont'd)

Manufacturer Device	Replacement Source	Device	IC Master Page
HD14073	Fairchild	F4073	
	Motorola	MC14073	
	National	CD4073	
	RCA	CD4073	
	SGS	HCF4073	
	Signetics	HEF4073	
	SSS	SCL4073	
	Solitron	CM4073	
	Toshiba	TC4073	
HD14075	Fairchild	F4075	
	Motorola	MC14075	
	National	CD4075	
	RCA	CD4075	
	SGS	HCF4075	
	Signetics	HEF4075	
	SSS	SCL4075	
	Solitron	CM4075	
	Toshiba	TC4075	
HD14076	Fairchild	F4076	
	Motorola	MC14076	
	National	CD4076	
		MM54C173	
		MM74C173	
	RCA	CD4076	
	SGS	HCF4076	
	Signetics	HEF4076	
	SSS	SCL4076	
	~~Solitron~~	~~CM4076~~	
	Toshiba	TC4076	
HD14077	Fairchild	F4077	
	Motorola	MC14077	
	National	CD4077	
	RCA	CD4077	
	SGS	HCF4077	
	Signetics	HEF4077	
	SSS	SCL4077	
	Solitron	CM4077	
HD14078	Fairchild	F4078	
	Motorola	MC14078	
	RCA	CD4078	
	SGS	HCF4078	
	Signetics	HEF4078	
	SSS	SCL4078	
	Solitron	CM4078	
	Toshiba	TC4078	
HD14081	Fairchild	F4081	
	Motorola	MC14081	
	National	CD4081	
		MM74C08	
	OKI	MSM4081	
	RCA	CD4081	
	Sanyo	LC4081	
	SGS	HCF4081	
	Signetics	HEF4081	
	SSS	SCL4081	
	Solitron	CM4081	
	Toshiba	TC4081	
HD14082	Fairchild	F4082	
	Motorola	MC14082	
	National	CD4082	
	RCA	CD4082	
	SGS	HCF4082	
	Signetics	HEF4082	
	SSS	SCL4082	
	Toshiba	TC4082	
HD14093	Fairchild	F4093	
	Motorola	MC14093	
	National	CD4093	
	OKI	MSM4093	
	RCA	CD4093	
	Sanyo	LC4093	
	SGS	HCF4093	
	Signetics	HEF4093	
	SSS	SCL4093	
	Toshiba	TC4093	
HD14094	Motorola	MC14094	
	RCA	CD4094	
	SGS	HCF4094	
	SSS	SCL4094	
	Toshiba	TC4094	
HD14099	Motorola	MC14099	
	National	CD4099	
	RCA	CD4099	
	SGS	HCF4099	
	~~SSS~~	~~SCL4099~~	
	Toshiba	TC4099	
HD14160	Fairchild	F40160	
	Motorola	MC14160	
	National	CD40160	
		MM54C160	

(Continued)

Manufacturer Device	Replacement Source	Device	IC Master Page
HD14160	National	MM74C160	
	RCA	CD40160	
	SGS	HCF40160	
	SSS	SCL4160	
	Toshiba	TC40160	
HD14161	Fairchild	F40161	
	Motorola	MC14161	
	National	CD40161	
		MM54C161	
		MM74C161	
	RCA	CD40161	
	SGS	HCF40161	
	Signetics	HEF40161	
	SSS	SCL4161	
	Toshiba	TC40161	
HD14162	Fairchild	F40162	
	Motorola	MC14162	
	National	CD40162	
		MM54C162	
		MM74C162	
	RCA	CD40162	
	SGS	HCF40162	
	Signetics	HEF40162	
	SSS	SCL4162	
	Toshiba	TC40162	
HD14163	Fairchild	F40163	
	Motorola	MC14163	
	National	CD40163	
		MM54C163	
		~~MM74C163~~	
	RCA	CD40163	
	SGS	HCF40163	
	Signetics	HEF40163	
	SSS	SCL4163	
	Toshiba	TC40163	
HD14174	Fairchild	F40174	
	Motorola	MC14174	
	National	CD40174	
		MM54C174	
		MM74C174	
	RCA	CD40174	
	SGS	HCF40174	
	Signetics	HEF40174	
	SSS	SCL4174	
	Toshiba	TC40174	
HD14175	Fairchild	F40175	
	Motorola	MC14175	
	National	CD40175	
		MM54C175	
		MM74C175	
	Signetics	HEF40175	
	Toshiba	TC40175	
HD14194	Fairchild	F40194	
	Motorola	MC14194	
	RCA	CD40194	
	SGS	HCF40194	
	Signetics	HEF40194	
HD14502	Motorola	MC14502	
	RCA	CD4502	
	SGS	HCF4502	
	Signetics	HEF4502	
	SSS	SCL4502	
HD14503	Fairchild	F40097	
	Motorola	MC14503	
	National	CD4503	
		MM80C97	
	RCA	CD4503	
	Signetics	HEF40097	
HD14508	Hitachi	HD74147	
	Motorola	MC14508	
	National	DM74147	
	RCA	CD4508	
	SGS	HCF4508	
	Signetics	**74147**	**861**
		HEF4508	
		N82147	
	SSS	SCL4508	
	Solitron	CM4508	
	TI	**SN74147**	**970**
	Toshiba	TC4508	
HD14510	Fairchild	F4510	
	Motorola	MC14510	
	National	CD4510	
	RCA	CD4510	
	SGS	HCF4510	
	Signetics	HEF4510	
	~~SSS~~	~~SCL4510~~	
	Solitron	CM4510	
	Toshiba	TC4510	
HD14511	Fairchild	F4511	
	Mitel	MD4511	
	MMI	4511	

(Continued)

Manufacturer Device	Replacement Source	Device	IC Master Page
HD14511	Motorola	MC14511	
	National	CD4511	
	NEC	μPD4511	
	RCA	CD4511	
	SGS	HCF4511	
	Signetics	HEF4511	
	SSS	SCL4511	
	Solitron	CM4511	
	Toshiba	TC4511	
HD14512	Fairchild	F4512	
	Motorola	MC14512	
	National	CD4512	
	RCA	CD4512	
	SGS	HCF4512	
	SSS	SCL4512	
	Toshiba	TC4512	
HD14514	Fairchild	F4514	
	Motorola	MC14514	
	National	CD4514	
	RCA	CD4514	
	SGS	HCF4514	
	Signetics	HEF4514	
	SSS	SCL4514	
	Solitron	CM4514	
	Toshiba	TC4514	
HD14515	Fairchild	F4515	
	Motorola	MC14515	
	National	CD4515	
	RCA	CD4515	
	~~SGS~~	~~HCF4515~~	
	Signetics	HEF4515	
	SSS	SCL4515	
	Solitron	CM4515	
	Toshiba	TC4515	
HD14516	Fairchild	F4516	
	Motorola	MC14516	
	National	CD4516	
	RCA	CD4516	
	SGS	HCF4516	
	Signetics	HEF4516	
	SSS	SCL4516	
	Solitron	CM4516	
	Toshiba	TC4516	
HD14517	Motorola	MC14517	
	RCA	CD4517	
	Signetics	HEF4517	
	SSS	SCL4517	
HD14518	Fairchild	F4518	
	Motorola	MC14518	
	National	CD4518	
	RCA	CD4518	
	SGS	HCF4518	
	Signetics	HEF4518	
	SSS	SCL4518	
	Solitron	CM4518	
	Toshiba	TC4518	
HD14519	Hitachi	HD4519	
	Motorola	MC14519	
	National	CD4519	
	RCA	CD4519	
	Signetics	HEF4519	
HD14520	Fairchild	F4520	
	Motorola	MC14520	
	National	CD4520	
	OKI	MSM4520	
	RCA	CD4520	
	Sanyo	LC4520	
	SGS	HCF4520	
	Signetics	HEF4520	
	SSS	SCL4520	
	Solitron	CM4520	
	Toshiba	TC4520	
HD14522	Fairchild	F4522	
	Motorola	MC14522	
	National	CD4522	
	RCA	CD4522	
	Signetics	HEF4522	
	SSS	SCL4522	
	Toshiba	TC4522	
HD14526	Fairchild	F4526	
	Motorola	MC14526	
	National	CD4526	
	Signetics	HEF4526	
	SSS	SCL4526	
	Toshiba	TC4526	
HD14527	Fairchild	F4527	
	Motorola	MC14527	
	National	CD4527	
	RCA	CD4527	
	SGS	HCF4527	
	Signetics	HEF4527	
	SSS	SCL4527	

(Continued)

Manufacturer Device	Replacement Source	Device	IC Master Page
HD14527	Toshiba	TC4527	
		TR4527	
HD14528	Fairchild	F4528	
	Motorola	MC14528	
	National	CD4528	
		MM74C221	
	RCA	CD4098	
	SGS	HCF4098	
	Signetics	HEF4528	
	SSS	SCL4528	
	Toshiba	TC4528	
HD14531	Fairchild	F4531	
	Motorola	MC14531	
	RCA	CD40101	
	SGS	HCF40101	
	Signetics	HEF4531	
	SSS	SCL4531	
	Toshiba	TC4531	
HD14532	Fairchild	F4532	
	Motorola	MC14532	
	RCA	CD4532	
	SGS	HCF4532	
	Signetics	HEF4532	
	SSS	SCL4532	
	Toshiba	TC4532	
HD14534	Motorola	MC14534	
	Signetics	HEF4534	
HD14539	Fairchild	F4539	
	Motorola	MC14539	
	~~Signetics~~	~~HEF4539~~	
	Toshiba	TC4539	
HD14543	Fairchild	F4543	
	Motorola	MC14543	
	National	CD4543	
	RCA	CD4543	
	Signetics	HEF4543	
	Toshiba	TC4543	
HD14553	Fairchild	F4553	
	Motorola	MC14533	
		MC14553	
HD14555	Fairchild	F4555	
	Motorola	MC14555	
	RCA	CD4555	
	SGS	HCF4555	
	Signetics	HEF4555	
	SSS	SCL4555	
	Toshiba	TC4555	
HD14557	Fairchild	F4557	
	Motorola	MC14557	
	Signetics	HEF4557	
HD14558	Motorola	MC14558	
	RCA	CD4055	
HD14560	Motorola	MC14560	
	Toshiba	TC4560	
HD14561	Motorola	MC14561	
	Toshiba	TC4561	
HD14566	Motorola	MC14566	
HD14568	Motorola	MC14568	
HD14569	Motorola	MC14569	
	RCA	CD4059	
	Signetics	HEF4059	
HD14572	Motorola	MC14572	
	Toshiba	TC4572	
HD14580	Motorola	MC14580	
	RCA	CD40108	
HD14581	Motorola	MC14581	
	RCA	CD40181	
		CD4057	
	SGS	HCF40181	
	SSS	SCL4581	
HD14582	Fairchild	F4582	
	Motorola	MC14582	
	RCA	CD40182	
	SGS	HCF40182	
	SSS	SCL4582	
HD14583	Fairchild	F4583	
	Motorola	MC14583	
	Toshiba	TC4583	
HD14584	Fairchild	F40014	
	Motorola	MC14584	
	National	CD40106	
		CD4584	
		MM54C14	
		MM74C14	
	RCA	CD40106	
	SGS	HCF40106	
	Signetics	**HEF40106**	**865**
	SSS	SCL4584	
HD14585	Fairchild	F40085	
	Motorola	MC14585	
	National	MM74C85	
	RCA	CD4585	

(Continued)

‡ Discontinued

Bold face device numbers indicate manufacturers data is provided in the IC Master on the pages noted.

Hitachi America, Ltd. (Cont'd)

Manufacturer Device	Replacement Source	Device	IC Master Page
HD14585	Signetics	HEF4585	
	SSS	SCL4585	
	Toshiba	TC4585	
HD14XXX	Fairchild	34XXX	
		F4XXX	
	Motorola	MC14XXX	
	National	CD4XXX	
	OKI	MSM4XXX	
	RCA	CD4XXX	
	SGS	HCF4XXX	
	SSS	SCL4XXX	
	Solitron	CM4XXX	
	TI	TP4000 series	
	Toshiba	TC4XXX	
HD268T26	Motorola	MC6880A	
		MC8T26	
	Signetics	N8T26	
HD4519	Hitachi	HD14519	
	Motorola	MC14519	
	National	CD4519	
	RCA	CD4519	
	Signetics	HEF4519	
HD46840	AMI	S6840	
	Fairchild	**F6840**	**1462**
	Hitachi	HD6840	
		HD68A40	
		HD68B40	
	Motorola	**MC6840**	**1505**
	Thomson-CSF		
		EF6840	
HD46846	AMI	S6846	
	Fairchild	**F6846**	**1463**
	Hitachi	HD6846P	
	Motorola	**MC6846**	**1505**
HD6800	Fairchild	F6800A	
	Hitachi	HD68A00	
		HD68B00	
	Motorola	**MC6800**	**1505,2045**
	Thomson-CSF		
		EF6800	
HD68000	Mostek	MK68000	
	Motorola	MC68000	
	Rockwell	R68000	
	Signetics	**SCN68000**	**1689,1690**
	Thomson-CSF		
		EF68000	
HD6801	**AMI**	**S6801**	**1450**
	Motorola	**MC6801**	**1501,1505**
HD6802	AMI	S6802	
	Fairchild	**F6802**	**1461**
	Motorola	**MC6802**	**1505,2045**
	Thomson-CSF		
		EF6802	
HD6803	**Motorola**	**MC6803**	**1501**
HD6805	**AMI**	**S6805**	**1451**
	Motorola	MC6805	
	Thomson-CSF		
		EF6805	
HD6808	AMI	S6808	
	Fairchild	**F6808**	**1461**
	Motorola	**MC6808**	**1505**
	Thomson-CSF		
		EF6808	
HD6809	**AMI**	**S6809**	**1448**
	Hitachi	HD68A09	
		HD68B09	
	Motorola	**MC6809**	**1505,2045**
	Thomson-CSF		
		EF6809	
HD6810	AMI	S6810	
	Fairchild	**F6810**	**1461**
	Hitachi	HD68A10	
	Motorola	MC6810	
		MCM6810	**1505,4046**
	Thomson-CSF		
		EF6810	
HD6821	AMI	S6821	
	Fairchild	**F6821**	**1462**
	Hitachi	HD68A21	
		HD68B21	
	Motorola	**MC6821**	**1505**
HD6840	AMI	S6840	
	Fairchild	**F6840**	**1462**
	Hitachi	HD46840	
		HD68A40	
		HD68B40	
	Motorola	**MC6840**	**1505**
	Thomson-CSF		
		EF6840	
HD6843	**Motorola**	**MC6843**	**1505**
HD6844	**Motorola**	**MC6844**	**1505**
HD6845	**Motorola**	**MC6845**	**1505**
	Rockwell	R6545	
HD68450	**Motorola**	**MC68450**	**1506,1510**
HD6846P	AMI	S6846	
	Fairchild	**F6846**	**1463**
	Hitachi	HD46846	
	Motorola	**MC6846**	**1505**
HD6850	AMI	S1602	
	Fairchild	3730	
		F6850	**1463**
	Fujitsu	MB8868A	
	GI	AY3-1015	
	Hitachi	HD68A50	
	Motorola	**MC6850**	**1505**
	National	MM5303	
	RCA	**CDP6402**	**1595**
	SMC	COM2017	
		COM2502H	
		COM8017	
	Thomson-CSF		
		EF6850	
	Western	TR1402	
		TR1602	
		TR1863	
HD6852	AMI	S6852	
	Fairchild	**F6852**	**1464**
	Hitachi	HD68A52	
	Motorola	**MC2652**	**1511**
		MC6852	**1505**
		MC68652	**1506,1511**
	SSS	SND5025	
	SMC	COM5025	
	Thomson-CSF		
		EF6852	
HD68A00	Fairchild	F6800A	
	Hitachi	HD6800	
		HD68B00	
	Motorola	**MC6800**	**1505,2045**
	Thomson-CSF		
		EF6800	
HD68A09	**AMI**	**S6809**	**1448**
	Hitachi	HD6809	
		HD68B09	
	Motorola	**MC6809**	**1505,2045**
	Thomson-CSF		
		EF6809	
HD68A10	AMI	S6810	
	Fairchild	**F6810**	**1461**
	Hitachi	HD6810	
	Motorola	MC6810	
		MCM6810	**1505,4046**
	Thomson-CSF		
		EF6810	
HD68A21	AMI	S6821	
	Fairchild	**F6821**	**1462**
	Hitachi	HD6821	
		HD68B21	
	Motorola	**MC6821**	**1505**
HD68A40	AMI	S6840	
	Fairchild	**F6840**	**1462**
	Hitachi	HD46840	
		HD6840	
		HD68B40	
	Motorola	**MC6840**	**1505**
	Thomson-CSF		
		EF6840	
HD68A45	Synertek	SY6845	
HD68A50	AMI	S1602	
	Fairchild	3730	
		F6850	**1463**
	Fujitsu	MB8868A	
	GI	AY3-1015	
	Hitachi	HD6850	
	Motorola	**MC6850**	**1505**
	National	MM5303	
	RCA	**CDP6402**	**1595**
	SMC	COM2017	
		COM2502H	
		COM8017	
	Thomson-CSF		
		EF6850	
	Western	TR1402	
		TR1602	
		TR1863	
HD68A52	AMI	S6852	
	Fairchild	**F6852**	**1464**
	Hitachi	HD6852	
	Motorola	**MC2652**	**1511**
		(Continued)	
HD68A52	**Motorola**	**MC6852**	**1505**
		MC68652	**1506,1511**
	SSS	SND5025	
	SMC	COM5025	
	Thomson-CSF		
		EF6852	
HD68B00	Fairchild	F6800A	
	Hitachi	HD6800	
		HD68A00	
	Motorola	**MC6800**	**1505,2045**
	Thomson-CSF		
		EF6800	
HD68B09	**AMI**	**S6809**	**1448**
	Hitachi	HD6809	
		HD68A09	
	Motorola	**MC6809**	**1505,2045**
	Thomson-CSF		
		EF6809	
HD68B21	AMI	S6821	
	Fairchild	**F6821**	**1462**
	Hitachi	HD6821	
		HD68A21	
	Motorola	**MC6821**	**1505**
HD68B40	AMI	S6840	
	Fairchild	**F6840**	**1462**
	Hitachi	HD46840	
		HD6840	
		HD68A40	
	Motorola	**MC6840**	**1505**
	Thomson-CSF		
		EF6840	
HD68B45	Synertek	SY6845	
HD7400	Fairchild	7400	
	National	DM7400	
	Signetics	**7400**	**860**
	TI	**SN7400**	**920**
	Toshiba	TC7400	
HD7401	Fairchild	7401	
	National	DM7401	
	TI	**SN7401**	**920**
HD7402	Fairchild	7402	
	National	DM7402	
	Signetics	**7402**	**860**
	TI	**SN7402**	**920**
HD7403	Fairchild	7403	
	National	DM7403	
	Signetics	**7403**	**860**
	TI	**SN7403**	**921**
HD7404	Fairchild	7404	
	National	DM7404	
	Signetics	**7404**	**860**
	TI	**SN7404**	**921**
	Toshiba	TC7404	
HD7405	Fairchild	7405	
	National	DM7405	
	Signetics	**7405**	**860**
	TI	**SN7405**	**921**
HD7406	Fairchild	7406	
	National	DM7406	
	Signetics	**7406**	**860**
	TI	**SN7406**	**922**
HD7407	Fairchild	7407	
	National	DM7407	
	Signetics	**7407**	**860**
	TI	**SN7407**	**922**
HD7408	Fairchild	7408	
	National	DM7408	
	Signetics	**7408**	**860**
	TI	**SN7408**	**922**
HD7409	Fairchild	7409	
	National	DM7409	
	TI	**SN7409**	**923**
HD7410	Fairchild	7410	
	National	DM7410	
	Signetics	**7410**	**860**
	TI	**SN7410**	**923**
	Toshiba	TC7410	
HD74107	Fairchild	74107	
	National	DM74107	
	Signetics	**74107**	**860**
	TI	**SN74107**	**957**
HD7411	Fairchild	7411	
	National	DM7411	
	Signetics	**7411**	**860**
HD7412	Fairchild	7412	
	TI	**SN7412**	**924**
HD74121	Fairchild	74121	
	National	DM74121	
	Signetics	**74121**	**860**
	TI	**SN74121**	**961**
HD74125	Fairchild	74125	
	National	DM74125	
		DM8093	
	Signetics	**74125**	**861**
	TI	**SN74125**	**963**
		SN74425	**1034**
HD74126	Fairchild	74126	
	National	DM74126	
		DM8094	
	Signetics	**74126**	**861**
	TI	**SN74126**	**963**
		SN74426	**1034**
HD7413	Fairchild	7413	
	National	DM7413	
	Signetics	**7413**	**860**
	TI	**SN7413**	**924**
HD74132	Fairchild	74132	
	National	DM74132	
	Signetics	**74132**	**861**
	TI	**SN74132**	**965**
HD74136	Fairchild	74136	
	TI	**SN74136**	**966**
HD7414	Fairchild	7414	
	National	DM7414	
	Signetics	**7414**	**860**
	TI	**SN7414**	**924**
HD74141	Fairchild	74141	
		93141	
	Hitachi	HD7441	
	National	DM74141	
		DM7441	
	Signetics	74141	
		7441	
	TI	SN74141	
HD74145	Fairchild	74145	
	National	DM74145	
	Signetics	**74145**	**861**
	TI	**SN74145**	**970**
HD74147	Hitachi	HD14508	
	Motorola	MC14508	
	National	DM74147	
	RCA	CD4508	
	SGS	HCF4508	
	Signetics	**74147**	**861**
		HEF4508	
		N82147	
	SSS	SCL4508	
	Solitron	CM4508	
	TI	**SN74147**	**970**
	Toshiba	TC4508	
HD74148	Fairchild	9318	
	National	DM74148	
		DM8318	
	Signetics	**74148**	**861**
		N82148	
	TI	**SN74148**	**971**
HD74150	Fairchild	74150	
	National	DM74150	
	Signetics	**74150**	**861**
	TI	**SN74150**	**971**
HD74151	Fairchild	74151	
	National	DM74151	
	Signetics	**74151**	**861**
	TI	SN74151	
		SN74151A	**972**
HD74153	Fairchild	74153	
	National	DM74153	
	Signetics	**74153**	**861**
	TI	**SN74153**	**972**
HD74156	Fairchild	74156	
	National	DM74156	
	Signetics	**74156**	**861**
	TI	**SN74156**	**974**
HD74157	National	DM74157	
	Signetics	**74157**	**861**
	TI	**SN74157**	**975**
HD7416	Fairchild	7416	
	National	DM7416	
	Signetics	**7416**	**860**
	TI	**SN7416**	**925**
HD74160	Fairchild	74160	
	National	DM74160	
	Signetics	**74160**	**861**
	TI	**SN74160**	**977**
HD74161	Fairchild	74161	
	National	DM74161	
	Signetics	**74161**	**861**
	TI	**SN74161**	**977**
HD74162	Fairchild	74162	
	National	DM74162	
	TI	**SN74162**	**978**

◆ Discontinued

The manufacturers report their devices can be used as direct replacements.
Performance details often differ, so compare the specifications considering your requirements.

Hitachi America, Ltd. (Cont'd)

Manufacturer Device	Replacement Source	Device	IC Master Page
HD74163	Fairchild	74163	
	National	DM74163	
	Signetics	**74163**	**861**
	TI	**SN74163**	**978**
HD74164	AMD	SN74164	
	Fairchild	74164	
	National	DM74164	
		DM8570	
		DM8579	
	Signetics	**74164**	**861**
	TI	**SN74164**	**979**
HD74166	Fairchild	74166	
	National	DM74166	
	Signetics	**74166**	**861**
	TI	**SN74166**	**979**
HD7417	Fairchild	7417	
	National	DM7417	
	Signetics	**7417**	**860**
	TI	**SN7417**	**925**
HD74170	Fairchild	74170	
	National	DM74170	
	Signetics	**74170**	**861**
	TI	**SN74170**	**981**
HD74174	Fairchild	74174	
	National	DM74174	
	Signetics	**74174**	**861**
	TI	**SN74174**	**983**
HD74175	Fairchild	74175	
	National	DM74175	
	Signetics	**74175**	**861**
	TI	**SN74175**	**983**
HD74180	Fairchild	74180	
	National	DM74180	
	Signetics	**74180**	**861**
	TI	**SN74180**	**985**
HD74181	Fairchild	9341	
	National	DM74181	
	Raytheon	RC9341	
	Signetics	**74181**	**861**
	TI	**SN74181**	**985**
HD74182	Fairchild	9342	
	National	DM74182	
	TI	**SN74182**	**986**
HD74190	Fairchild	74190	
	National	DM74190	
	Signetics	**74190**	**861**
	TI	**SN74190**	**989**
HD74191	Fairchild	74191	
	National	DM74191	
	Signetics	**74191**	**861**
	TI	**SN74191**	**989**
HD74194	Fairchild	74194	
	National	DM74194	
	Signetics	**74194**	**861**
	TI	**SN74194**	**990**
HD74198	Fairchild	74198	
	National	DM74198	
	Signetics	74198	
	TI	**SN74198**	**992**
HD7420	Fairchild	7420	
		9004	
	National	DM7420	
		DM9004C	
	Signetics	**7420**	**860**
	TI	**SN7420**	**926**
	Toshiba	TC7420	
HD7422	Fairchild	7422	
	TI	**SN7422**	**927**
HD7426	Fairchild	7426	
	National	DM7426	
		DM8810	
	Signetics	**7426**	**860**
	TI	**SN7426**	**928**
HD7427	Fairchild	7427	
	National	DM7427	
	Signetics	**7427**	**860**
	TI	**SN7427**	**929**
HD7430	Fairchild	7430	
	National	DM7430	
	Signetics	**7430**	**860**
	TI	**SN7430**	**929**
HD7432	Fairchild	7432	
	National	DM7432	
	Signetics	**7432**	**860**
	TI	**SN7432**	**930**
HD7437	Fairchild	7437	
	National	DM7437	
	Signetics	**7437**	**860**
	TI	**SN7437**	**932**
HD7438	Fairchild	7438	
	National	DM7438	
	Signetics	**7438**	**860**
	TI	**SN7438**	**932**
HD7440	Fairchild	7440	
	National	DM7440	
	Signetics	**7440**	**860**
	TI	**SN7440**	**933**
HD7441	Fairchild	74141	
		93141	
	Hitachi	HD74141	
	National	DM74141	
		DM7441	
	Signetics	74141	
		7441	
	TI	SN74141	
HD7442	Fairchild	7442	
	National	DM7442	
		DM8842	
	Signetics	**7442**	**860**
	TI	SN7442	
		SN7442A	**933**
HD7443	TI	SN7443	
HD7444	TI	SN7444	
HD7445	Fairchild	7445	
	National	DM7445	
	Signetics	**7445**	**860**
	TI	**SN7445**	**934**
HD7446	Fairchild	7446	
	TI	SN7446	
		SN7446A	**935**
HD7447	Fairchild	7447	
	National	DM7447	
	TI	SN7447	
		SN7447A	**935**
HD7450	Fairchild	7450	
	National	DM7450	
	Signetics	**7450**	**860**
	TI	**SN7450**	**936**
HD7451	Fairchild	7451	
	National	DM7451	
	Signetics	**7451**	**860**
	TI	SN7451	
HD7453	Fairchild	7453	
	National	DM7453	
	TI	**SN7453**	**937**
HD7454	Fairchild	7454	
	National	DM7454	
	TI	**SN7454**	**938**
HD7460	Fairchild	7460	
	National	DM7460	
	TI	**SN7460**	**940**
HD7470	Fairchild	7470	
	National	DM7470	
	TI	**SN7470**	**943**
HD7472	Fairchild	7472	
	National	DM7472	
	TI	**SN7472**	**944**
HD7473	Fairchild	7473	
	National	DM7473	
	Signetics	**7473**	**860**
	TI	**SN7473**	**944**
HD7474	Fairchild	7474	
	National	DM7474	
	Signetics	**7474**	**860**
	TI	SN7474	
HD7475	Fairchild	7475	
	National	DM7475	
	Signetics	**7475**	**860**
	TI	**SN7475**	**946**
HD7476	Fairchild	7476	
	National	DM7476	
	Signetics	**7476**	**860**
	TI	**SN7476**	**946**
HD7482	National	DM7482	
	TI	**SN7482**	**948**
HD7483	Fairchild	7483	
	National	DM7483	
	Signetics	**7483**	**860**
	TI	SN7483	
		SN7483A	**949**
HD7485	Fairchild	7485	
	National	DM7485	
	Signetics	**7485**	**860**
	TI	**SN7485**	**950**
HD7486	Fairchild	7486	
	National	DM7486	
	Signetics	**7486**	**860**
	TI	**SN7486**	**950**
HD7489	Fairchild	7489	
	Hitachi	HD74S289	
	National	DM7489	
		(Continued)	
HD7489	National	DM74S289	
		DM8589	
		MM74S289	
	Signetics	74S289	
		N82S25	
	TI	SN74S289	
HD7490	Fairchild	7490	
	National	DM7490	
	Signetics	**7490**	**860**
	TI	SN7490	
		SN7490A	**952**
HD7491	Fairchild	7491	
	National	DM7491	
	Signetics	**7491**	**860**
	TI	SN7491	
		SN7491A	**952**
HD7492	Fairchild	7492	
	National	DM7492	
	Signetics	**7492**	**860**
	TI	SN7492	
		SN7492A	**952**
HD7493	Fairchild	7493	
	National	DM7493	
	Signetics	**7493**	**860**
	TI	SN7493	
		SN7493A	**953**
HD7494	Fairchild	7494	
	Signetics	**7494**	**860**
	TI	**SN7494**	**953**
HD7495	Fairchild	7495	
	National	DM7495	
	Signetics	7495	
	TI	SN7495	
		SN7495A	**954**
HD7496	Fairchild	7496	
	National	DM7496	
	Signetics	**7496**	**860**
	TI	**SN7496**	**954**
HD74H183	Fairchild	74H183	
	TI	**SN74H183**	**986**
HD74LS00	Fairchild	74LS00	
	Motorola	SN74LS00	
	National	DM74LS00	
	SGS	T74LS00	
	Signetics	74LS00	
	TI	**SN74LS00**	**920**
HD74LS01	Fairchild	74LS01	
	Motorola	SN74LS01	
	National	DM74LS01	
	Signetics	74LS01	
	TI	**SN74LS01**	**920**
HD74LS02	Fairchild	74LS02	
	Motorola	SN74LS02	
	National	DM74LS02	
	SGS	T74LS02	
	Signetics	74LS02	
	TI	**SN74LS02**	**920**
HD74LS03	Fairchild	74LS03	
	Motorola	SN74LS03	
	National	DM74LS03	
	SGS	T74LS03	
	TI	**SN74LS03**	**921**
HD74LS04	Fairchild	74LS04	
	Motorola	SN74LS04	
	National	DM74LS04	
	SGS	T74LS04	
	Signetics	74LS04	
	TI	**SN74LS04**	**921**
HD74LS05	Fairchild	74LS05	
	Motorola	SN74LS05	
	National	DM74LS05	
	NEC	μPB74LS05	
	SGS	T74LS05	
	Signetics	74LS05	
	TI	**SN74LS05**	**921**
HD74LS08	Fairchild	74LS08	
	Motorola	SN74LS08	
	National	DM74LS08	
	SGS	T74LS08	
	Signetics	74LS08	
	TI	**SN74LS08**	**922**
HD74LS09	Fairchild	74LS09	
	Motorola	SN74LS09	
	National	DM74LS09	
	SGS	T74LS09	
	TI	**SN74LS09**	**923**
HD74LS10	Fairchild	74LS10	
	Motorola	SN74LS10	
	National	DM74LS10	
	SGS	T74LS10	
	Signetics	74LS10	
	TI	**SN74LS10**	**923**
HD74LS107	Motorola	SN74LS107A	
	National	DM74LS107	
	Signetics	74LS107	
	TI	SN74LS107	
		SN74LS107A	**957**
HD74LS109	Fairchild	74LS109	
	Motorola	SN74LS109	
		SN74LS109A	
	National	DM74LS109	
	SGS	T74LS109	
	Signetics	74LS109	
	TI	**SN74LS109A**	**958**
HD74LS11	Fairchild	74LS11	
	Motorola	SN74LS11	
	National	DM74LS11	
	SGS	T74LS11	
	Signetics	74LS11	
	TI	**SN74LS11**	**923**
HD74LS112	Fairchild	74LS112	
	Motorola	SN74LS112A	
	National	DM74LS112	
	SGS	T74LS112	
	Signetics	74LS112	
	TI	**SN74LS112A**	**959**
HD74LS113	Fairchild	74LS113	
	Motorola	SN74LS113A	
	National	DM74LS113	
	SGS	T74LS113	
	Signetics	74LS113	
	TI	**SN74LS113A**	**959**
HD74LS114	Fairchild	74LS114	
	Motorola	SN74LS114A	
	National	DM74LS114	
	SGS	T74LS114	
	TI	**SN74LS114A**	**960**
HD74LS12	Motorola	SN74LS12	
	National	DM74LS12	
	Signetics	74LS12	
	TI	**SN74LS12**	**924**
HD74LS122	Motorola	SN74LS122	
	National	DM74LS122	
	TI	**SN74LS122**	**961**
HD74LS123	Motorola	SN74LS123	
	National	DM74LS123	
	TI	**SN74LS123**	**962**
HD74LS13	Fairchild	74LS13	
	Motorola	SN74LS13	
	National	DM74LS13	
	Signetics	74LS13	
	TI	**SN74LS13**	**924**
HD74LS132	Fairchild	74LS132	
	Motorola	SN74LS132	
	National	DM74LS132	
	SGS	T74LS132	
	Signetics	74LS132	
	TI	**SN74LS132**	**965**
HD74LS136	Fairchild	74LS136	
	Motorola	SN74LS136	
	National	DM74LS136	
	SGS	T74LS136	
	Signetics	74LS136	
	TI	**SN74LS136**	**966**
HD74LS138	Fairchild	74LS138	
	Motorola	SN74LS138	
	National	DM74LS138	
	SGS	T74LS138	
	Signetics	74LS138	
	TI	**SN74LS138**	**968**
HD74LS139	Fairchild	74LS139	
	Motorola	SN74LS139	
	National	DM74LS139	
	SGS	T74LS139	
	Signetics	74LS139	
	TI	**SN74LS139**	**968**
HD74LS14	Fairchild	74LS14	
	Motorola	SN74LS14	
	National	DM74LS14	
	Signetics	74LS14	
	TI	**SN74LS14**	**924**
HD74LS148	Motorola	SN74LS148	
	TI	**SN74LS148**	**971**
HD74LS15	Fairchild	74LS15	
	Motorola	SN74LS15	
	National	DM74LS15	
	SGS	T74LS15	
	TI	**SN74LS15**	**925**
HD74LS151	Fairchild	74LS151	
	Hitachi	HD74LS151A	
	Motorola	SN74LS151	
	National	DM74LS151	
	SGS	T74LS151	
		(Continued)	

♦ Discontinued

Bold face device numbers indicate manufacturers data is provided in the IC Master on the pages noted.

© IC MASTER 1984

Hitachi America, Ltd. (Cont'd)

Manufacturer Device	Replacement Source	Device	IC Master Page
HD74LS151	Signetics	74LS151	
	TI	**SN74LS151**	**972**
HD74LS151A	Fairchild	74LS151	
	Hitachi	HD74LS151	
	Motorola	SN74LS151	
	National	DM74LS151	
	SGS	T74LS151	
	Signetics	74LS151	
	TI	**SN74LS151**	**972**
HD74LS152	Signetics	74LS152	
HD74LS153	Fairchild	74LS153	
	Motorola	SN74LS153	
	National	DM74LS153	
	SGS	T74LS153	
	Signetics	74LS153	
	TI	**SN74LS153**	**972**
HD74LS155	Fairchild	74LS155	
	Motorola	SN74LS155	
	National	DM74LS155	
	Signetics	74LS155	
	TI	**SN74LS155**	**974**
HD74LS156	Fairchild	74LS156	
	Motorola	SN74LS156	
	National	DM74LS156	
	SGS	T74LS156	
	Signetics	74LS156	
	TI	**SN74LS156**	**974**
HD74LS157	Fairchild	74LS157	
	Motorola	SN74LS157	
	National	DM74LS157	
	SGS	T74LS157	
	Signetics	74LS157	
	TI	**SN74LS157**	**975**
HD74LS158	Fairchild	74LS158	
	Motorola	SN74LS158	
	National	DM74LS158	
	SGS	T74LS158	
	Signetics	74LS158	
	TI	**SN74LS158**	**975**
HD74LS160A	Fairchild	74LS160	
	Motorola	SN74LS160A	
	National	DM74LS160	
	SGS	T74LS160	
	Signetics	74LS160	
		74LS160A	
	TI	**SN74LS160A**	**977**
HD74LS161A	Fairchild	74LS161A	
	Motorola	SN74LS161A	
	National	DM74LS161	
	NEC	μPB74LS161	
	SGS	T74LS161	
	Signetics	74LS161A	
	TI	**SN74LS161A**	**977**
HD74LS162A	Fairchild	74LS162	
	Motorola	SN74LS162A	
	National	DM74LS162	
	SGS	T74LS162	
	Signetics	74LS162A	
	TI	**SN74LS162A**	**978**
HD74LS163	Fairchild	74LS163	
	Hitachi	HD74LS163A	
	Motorola	SN74LS163A	
	National	DM74LS163	
	SGS	T74LS163	
	Signetics	74LS163A	
	TI	**SN74LS163A**	**978**
HD74LS163A	Fairchild	74LS163	
	Hitachi	HD74LS163	
	Motorola	SN74LS163A	
	National	DM74LS163	
	SGS	T74LS163	
	Signetics	74LS163A	
	TI	**SN74LS163A**	**978**
HD74LS164	Fairchild	74LS164	
	Motorola	SN74LS164A	
	National	DM74LS164	
	SGS	T74LS164	
	Signetics	74LS164	
		74LS164A	
	TI	**SN74LS164**	**979**
HD74LS168	Fairchild	74LS168	
	Motorola	SN74LS168	
	National	DM74LS168	
	Signetics	74LS168A	
	Ti	SN74LS168	
HD74LS169	Fairchild	74LS169	
	Motorola	SN74LS169	
	National	DM74LS169	
	Signetics	74LS169A	
HD74LS174	Fairchild	74LS174	
	Motorola	SN74LS174	
	National	DM74LS174	
	SGS	T74LS174	
	Signetics	74LS174	
	TI	**SN74LS174**	**983**
HD74LS175	Fairchild	74LS175	
	Motorola	SN74LS175	
	SGS	T74LS175	
	Signetics	74LS175	
	TI	**SN74LS175**	**983**
HD74LS181	Fairchild	74LS181	
	Motorola	SN74LS181	
	SGS	T74LS181	
	Signetics	74LS181	
	TI	**SN74LS181**	**985**
HD74LS183A	Fairchild	74LS83A	
	Hitachi	HD74LS83A	
	Motorola	SN74LS83A	
	National	DM74LS83A	
	Signetics	74LS83	
		74LS83A	
	TI	**SN74LS83A**	**949**
HD74LS190	Fairchild	74LS190	
	Motorola	SN74LS190	
	National	DM74LS190	
	SGS	T74LS190	
	TI	**SN74LS190**	**989**
HD74LS191	Fairchild	74LS191	
	Motorola	SN74LS191	
	National	DM74LS191	
	SGS	T74LS191	
	Signetics	74LS191	
	TI	**SN74LS191**	**989**
HD74LS192	Fairchild	74LS192	
	Motorola	SN74LS192	
	National	DM74LS192	
	SGS	T74LS192	
	Signetics	74LS192	
	TI	**SN74LS192**	**990**
HD74LS193	Fairchild	74LS193	
	Motorola	SN74LS193	
	National	DM74LS193	
	SGS	T74LS193	
	Signetics	74LS193	
	TI	**SN74LS193**	**990**
HD74LS194A	Fairchild	74LS194A	
	Motorola	SN74LS194A	
	National	DM74LS194	
	SGS	T74LS194A	
	Signetics	74LS194A	
	TI	**SN74LS194A**	**990**
HD74LS195A	Fairchild	74LS195A	
	Motorola	SN74LS195A	
	National	DM74LS195	
	SGS	T74LS195A	
	Signetics	74LS195A	
	TI	**SN74LS195A**	**991**
HD74LS196	Fairchild	74LS196	
	Motorola	SN74LS196	
	National	DM74LS196	
	Signetics	N82S80	
	TI	**SN74LS196**	**991**
HD74LS197	Fairchild	74LS197	
	Motorola	SN74LS197	
	National	DM74LS197	
	Signetics	74LS197	
	TI	**SN74LS197**	**992**
HD74LS20	Fairchild	74LS20	
	Motorola	SN74LS20	
	National	DM74LS20	
	SGS	T74LS20	
	Signetics	74LS20	
	TI	**SN74LS20**	**926**
HD74LS21	Fairchild	74LS21	
	Motorola	SN74LS21	
	National	DM74LS21	
	SGS	T74LS21	
	Signetics	74LS21	
	TI	**SN74LS21**	**927**
HD74LS22	Fairchild	74LS22	
	Motorola	SN74LS22	
	National	DM74LS22	
	SGS	T74LS22	
	TI	**SN74LS22**	**927**
HD74LS221	Fairchild	74LS221	
	Motorola	SN74LS221	
	National	DM74LS221	
	Ti	**SN74LS221**	**994**
HD74LS240	Fairchild	74LS240	
	MMI	**SN74LS240**	**804**
	Motorola	SN74LS240	
		(Continued)	
HD74LS240	Signetics	74LS240	
	TI	SN74LS240	
HD74LS241	Fairchild	74LS241	
	MMI	**SN74LS241**	**804**
	Motorola	SN74LS241	
	Signetics	74LS241	
	TI	SN74LS241	
HD74LS244	Fairchild	74LS244	
	MMI	**SN74LS244**	**804**
	Motorola	SN74LS244	
	Signetics	74LS244	
	TI	SN74LS244	
HD74LS247	Fairchild	74LS247	
	Motorola	SN74LS247	
	National	DM74LS247	
	TI	**SN74LS247**	**1001**
HD74LS248	Fairchild	74LS248	
	Motorola	SN74LS248	
	National	DM74LS248	
	SGS	T74LS248	
	TI	**SN74LS248**	**1002**
HD74LS249	Fairchild	74LS249	
	Motorola	SN74LS249	
	National	DM74LS249	
	SGS	T74LS249	
	TI	**SN74LS249**	**1002**
HD74LS251	Fairchild	74LS251	
	Motorola	SN74LS251	
	National	DM74LS251	
	SGS	T74LS251	
	Signetics	74LS251	
	TI	**SN74LS251**	**1003**
HD74LS253	Fairchild	74LS253	
	Motorola	SN74LS253	
	National	DM74LS253	
		DM8214	
	SGS	T74LS253	
	Signetics	74LS253	
	TI	**SN74LS253**	**1003**
HD74LS257	Fairchild	74LS257A	
	Motorola	SN74LS257A	
	National	DM74LS257	
	SGS	T74LS257	
	Signetics	74LS257	
		74LS257A	
	TI	SN74LS257	
HD74LS258	Fairchild	74LS258A	
	Motorola	SN74LS258A	
	National	DM74LS258	
	SGS	T74LS258	
	Signetics	74LS258	
	TI	SN74LS258	
HD74LS26	Fairchild	74LS26	
	Motorola	SN74LS26	
	National	DM74LS26	
	SGS	T74LS26	
	Signetics	74LS26	
	TI	**SN74LS26**	**928**
HD74LS27	Fairchild	74LS27	
	Motorola	SN74LS27	
	National	DM74LS27	
	SGS	T74LS27	
	Signetics	74LS27	
	TI	**SN74LS27**	**929**
HD74LS279	Fairchild	74LS279	
	Motorola	SN74LS279	
	National	DM74LS279	
	Signetics	74LS279	
	TI	**SN74LS279**	**1009**
HD74LS280	Motorola	SN74LS280	
	TI	**SN74LS280**	**1009**
HD74LS283	Fairchild	74LS283	
	Hitachi	HD74LS283A	
	Motorola	SN74LS283	
	National	DM74LS283	
	SGS	T74LS283	
	Signetics	74LS283	
	TI	**SN74LS283**	**1011**
HD74LS283A	Fairchild	74LS283	
	Hitachi	HD74LS283	
	Motorola	SN74LS283	
	National	DM74LS283	
	SGS	T74LS283	
	Signetics	74LS283	
	TI	**SN74LS283**	**1011**
HD74LS290	Fairchild	74LS290	
	Motorola	SN74LS290	
	National	DM74LS290	
	SGS	T74LS290	
	Signetics	74LS290	
	TI	**SN74LS290**	**1012**
HD74LS293	Fairchild	74LS293	
	Motorola	SN74LS293	
	National	DM74LS293	
	SGS	T74LS293	
	Signetics	74LS293	
	TI	**SN74LS293**	**1014**
HD74LS298	Fairchild	74LS298	
	Motorola	SN74LS298	
	SGS	T74LS298	
	Signetics	74LS298	
	TI	**SN74LS298**	**1015**
HD74LS299	AMD	SN74LS299	
	Fairchild	74LS299	
	Motorola	SN74LS299	
	SGS	T74LS299	
	TI	**SN74LS299**	**1016**
HD74LS30	Fairchild	74LS30	
	Motorola	SN74LS30	
	National	DM74LS30	
	SGS	T74LS30	
	Signetics	74LS30	
	TI	**SN74LS30**	**929**
HD74LS32	Fairchild	74LS32	
	Motorola	SN54LS32	
		SN74LS32	
	National	DM74LS32	
	SGS	T74LS32	
	Signetics	74LS32	
	TI	**SN74LS32**	**930**
HD74LS367	Fairchild	74LS367A	
	Hitachi	HD74LS367A	
	Motorola	SN74LS367A	
	National	DM74LS367	
	SGS	T74LS367A	
	Signetics	74LS367	
		74LS367A	
	TI	**SN74LS367A**	**1024**
HD74LS367A	Fairchild	74LS367A	
	Hitachi	HD74LS367	
	Motorola	SN74LS367A	
	National	DM74LS367	
	SGS	T74LS367A	
	Signetics	74LS367	
		74LS367A	
	TI	**SN74LS367A**	**1024**
HD74LS368	Fairchild	74LS368A	
	Motorola	SN74LS368A	
	National	DM74LS368	
	SGS	T74LS368	
	Signetics	74LS368	
		74LS368A	
	TI	**SN74LS368A**	**1024**
HD74LS37	Fairchild	74LS37	
	Motorola	SN74LS37	
	National	DM74LS37	
	SGS	T74LS37	
	Signetics	74LS37	
	TI	**SN74LS37**	**932**
HD74LS38	Fairchild	74LS38	
	Motorola	SN74LS38	
	National	DM74LS38	
	SGS	T74LS38	
	Signetics	74LS38	
	TI	**SN74LS38**	**932**
HD74LS386	Motorola	SN74LS386	
	National	DM74LS386	
	TI	**SN74LS386**	**1030**
HD74LS40	Fairchild	74LS40	
	Motorola	SN74LS40	
	National	DM74LS40	
	SGS	T74LS40	
	Signetics	74LS40	
	TI	**SN74LS40**	**933**
HD74LS42	Fairchild	74LS42	
	Motorola	SN74LS42	
	National	DM74LS42	
	SGS	T74LS42	
	Signetics	74LS42	
	TI	**SN74LS42**	**933**
HD74LS47	Fairchild	74LS47	
	Motorola	SN74LS47	
	National	DM74LS47	
	SGS	T74LS47	
	TI	**SN74LS47**	**935**
HD74LS48	Fairchild	74LS48	
	Motorola	SN74LS48	
	National	DM74LS48	
	SGS	T74LS48	
	Signetics	74LS48	
	TI	**SN74LS48**	**935**
HD74LS49	Fairchild	74LS49	
	Motorola	SN74LS49	
		(Continued)	

◆ Discontinued

The manufacturers report their devices can be used as direct replacements.
Performance details often differ, so compare the specifications considering your requirements.

Hitachi America, Ltd. (Cont'd)

Manufacturer Device	Replacement Source	Device	IC Master Page
HD74LS49	National	DM74LS49	
	SGS	T74LS49	
	TI	**SN74LS49**	**935**
HD74LS51	Fairchild	74LS51	
	Motorola	SN74LS51	
	National	DM74LS51	
	SGS	T74LS51	
	Signetics	74LS51	
	TI	**SN74LS51**	**936**
HD74LS54	Fairchild	74LS54	
	Motorola	SN74LS54	
	National	DM74LS54	
	SGS	T74LS54	
	Signetics	74LS54	
	TI	**SN74LS54**	**938**
HD74LS55	Fairchild	74LS55	
	Motorola	SN74LS55	
	National	DM74LS55	
	SGS	T74LS55	
	TI	**SN74LS55**	**939**
HD74LS73	Motorola	SN74LS73A	
	National	DM74LS73	
	Signetics	74LS73	
	TI	**SN74LS73A**	**944**
HD74LS74	Fairchild	74LS74	
	Hitachi	HD74LS74A	
	Motorola	SN74LS74A	
	National	DM74LS74	
	SGS	T74LS74	
	Signetics	74LS74	
	TI	**SN74LS74A**	**945,946**
HD74LS74A	Fairchild	74LS74	
	Hitachi	HD74LS74	
	Motorola	SN74LS74A	
	National	DM74LS74	
	SGS	T74LS74	
	Signetics	74LS74	
	TI	**SN74LS74A**	**945,946**
HD74LS75	Motorola	SN74LS75	
	National	DM74LS75	
	Signetics	74LS75	
	TI	SN74LS75	
HD74LS76	Motorola	SN74LS76A	
	National	DM74LS76	
	Signetics	74LS76	
	TI	**SN74LS76A**	**946**
HD74LS78	Motorola	SN74LS78A	
	National	DM74LS78	
	TI	**SN74LS78A**	**947**
HD74LS83A	Fairchild	74LS83A	
	Hitachi	HD74LS183A	
	Motorola	SN74LS83A	
	National	DM74LS83A	
	Signetics	74LS83	
		74LS83A	
	TI	**SN74LS83A**	**949**
HD74LS85	Fairchild	74LS85	
	Motorola	SN74LS85	
	National	DM74LS85	
	Signetics	74LS85	
	TI	**SN74LS85**	**950**
HD74LS86	Fairchild	74LS86	
	Motorola	SN74LS86	
	National	DM74LS86	
	SGS	T74LS86	
	Signetics	74LS86	
	TI	**SN74LS86**	**950**
HD74LS91	Motorola	SN74LS91	
	TI	**SN74LS91**	**952**
HD74LS92	Fairchild	74LS92	
	Motorola	SN74LS92	
	National	DM74LS92	
	SGS	T74LS92	
	Signetics	74LS92	
	TI	**SN74LS92**	**952**
HD74LS93	Fairchild	74LS93	
	Motorola	SN74LS93	
	National	DM74LS93	
	SGS	T74LS93	
	Signetics	74LS93	
	TI	**SN74LS93**	**953**
HD74LS95B	Fairchild	74LS95B	
	Motorola	SN74LS95B	
	National	DM74LS95B	
	SGS	T74LS95B	
	Signetics	74LS95B	
	TI	**SN74LS95B**	**954**
HD74S00	Fairchild	74S00	
	National	DM74S00	
	Signetics	74S00	
	TI	**SN74S00**	**920**
HD74S02	Fairchild	74S02	
	National	DM74S02	
	Signetics	74S02	
	TI	**SN74S02**	**920**
		SN74S32	**930**
HD74S03	Fairchild	74S03	
	National	DM74S03	
	Signetics	74S03	
	TI	**SN74S03**	**921**
HD74S04	Fairchild	74S04	
	National	DM74S04	
	Signetics	74S04	
	TI	**SN74S04**	**921**
HD74S05	Fairchild	74S05	
	National	DM74S05	
	Signetics	74S05	
	TI	**SN74S05**	**921**
HD74S10	Fairchild	74S10	
	National	DM74S10	
	Signetics	74S10	
	TI	**SN74S10**	**923**
HD74S11	Fairchild	74S11	
	National	DM74S11	
	Signetics	74S11	
	TI	**SN74S11**	**923**
HD74S112	Fairchild	74S112	
	Motorola	SN74S112	
	National	DM74S112	
	Signetics	74S112	
	TI	**SN74S112**	**959**
HD74S113	Fairchild	74S113	
	National	DM74S113	
	Signetics	74S113	
	TI	**SN74S113**	**959**
HD74S114	National	DM74S114	
	TI	**SN74S114**	**960**
HD74S12	TI	SN74S12	
HD74S133	Fairchild	74S133	
	National	DM74S133	
	Signetics	74S133	
	TI	**SN74S133**	**965**
HD74S134	National	DM74S134	
	Signetics	74S134	
	TI	**SN74S134**	**965**
HD74S135	Fairchild	74S135	
	National	DM74S135	
	Signetics	74S135	
	TI	**SN74S135**	**966**
HD74S140	Fairchild	74S140	
	National	DM74S140	
	Signetics	74S140	
	TI	**SN74S140**	**969**
HD74S15	Fairchild	74S15	
	National	DM74S15	
	TI	**SN74S15**	**925**
HD74S151	AMD	SN74S151	
	Fairchild	74S151	
	National	DM74S151	
	Signetics	74S151	
	TI	**SN74S151**	**972**
HD74S153	AMD	SN74S153	
	Fairchild	74S153	
	National	DM74S153	
	Signetics	74S153	
	TI	**SN74S153**	**972**
HD74S157	AMD	SN74S157	
	Fairchild	74S157	
	National	DM74S157	
	Signetics	74S157	
	TI	**SN74S157**	**975**
HD74S158	AMD	SN74S158	
	Fairchild	74S158	
	National	DM74S158	
	Signetics	74S158	
	TI	**SN74S158**	**975**
HD74S174	AMD	SN74S174	
	Fairchild	74S174	
	National	DM74S174	
	Signetics	74S174	
	TI	**SN74S174**	**983**
HD74S175	AMD	SN74S175	
	Fairchild	74S175	
	National	DM74S175	
	Signetics	74S175	
	TI	SN74S175	
HD74S181	AMD	SN74S181	
	Fairchild	93S41C	
		(Continued)	
HD74S181	Signetics	74S181	
	TI	**SN74S181**	**985**
HD74S182	Fairchild	74S182	
	MMI	**SN74S182**	**819**
	National	DM74S182	
	Signetics	74S182	
	TI	**SN74S182**	**986**
HD74S189	AMD	AM27LS03	
		AM27S03	
		SN74S189	
	Fairchild	74S189	
		93405	
	National	DM74S189	
		DM7599	
		DM8599	
	Signetics	74S189	
	TI	SN74S189	
HD74S20	Fairchild	74S20	
	National	DM74S20	
	Signetics	74S20	
	TI	**SN74S20**	**926**
HD74S22	Fairchild	74S22	
	National	DM74S22	
	TI	**SN74S22**	**927**
HD74S251	AMD	SN74S251	
	National	DM74S251	
	Signetics	74S251	
	TI	**SN74S251**	**1003**
HD74S257	AMD	SN74S257	
	Fairchild	74S257	
	National	DM7123	
		DM74S257	
		DM8123	
	Signetics	74S257	
	TI	**SN74S257**	**1004**
HD74S258	AMD	SN74S258	
	Fairchild	74S258	
	Signetics	74S258	
	TI	**SN74S258**	**1005**
HD74S280	National	DM74S280	
	Signetics	74S280	
	TI	**SN74S280**	**1009**
HD74S289	Fairchild	7489	
	Hitachi	HD7489	
	National	DM7489	
		DM74S289	
		DM8589	
		MM74S289	
	Signetics	74S289	
		N82S25	
	TI	SN74S289	
HD74S40	Fairchild	74S40	
	National	DM74S40	
	Signetics	74S40	
	TI	**SN74S40**	**933**
HD74S51	Fairchild	74S51	
	National	DM74S51	
	Signetics	74S51	
	TI	**SN74S51**	**936**
HD74S65	Fairchild	74S65	
	National	DM74S65	
	TI	SN74S65	
HD74S74	Fairchild	74S74	
	National	DM74S74	
	Signetics	74S74	
	TI	SN74S74	
HD74S86	Fairchild	74S86	
	National	DM74S86	
	Signetics	74S86	
	TI	**SN74S86**	**950**
HD75107A	TI	SN75107A	
HD75108A	TI	SN75108A	
HD75110	Fairchild	75110	
	Motorola	MC75110	
	National	LM75110	
	TI	SN75110	
		SN75110A	
HD75154	Fairchild	75154	
	National	DS75154	
	SiliconG	SG75154	
	TI	SN75154	
HD75188	AMD	MC1488	
	Exar	**XR1488**	**3384**
	Fairchild	μA1488	
	Motorola	**MC1488**	**3064**
	National	DS1488	
	Raytheon	RM1488	
	Signetics	MC1488	
	SiliconG	SG1488	
	TI	MC1488	
		SN75188	
HD75189	AMD	MC1489	
	Exar	XR1489	
	Fairchild	μA1489	
	Motorola	**MC1489**	**3064**
	National	DS1489	
	Signetics	MC1489	
	SiliconG	SG1489	
	TI	SN75189	
		SN85189	
HD75450A	TI	SN75450A	
HD75451A	TI	SN75451A	
HD75452	Fairchild	75452	
	Motorola	MC75452	
	National	DS75452	
	SiliconG	SG75452	
	TI	SN75452	
HD75453	Fairchild	75453	
	Motorola	MC75453	
	National	DS75453	
		LM75453	
	SiliconG	SG75453	
	TI	SN75453	
HM100474	AMD	**AM100474**	**3912**
	Fairchild	F100474	
HM10422	Fairchild	F10422	
	Fujitsu	MBM10422	
	Motorola	**MCM10422**	**4047**
	National	DM10422	
	Signetics	10422	
HM10470	AMD	AM10470	
	Fairchild	F10470	
	Fujitsu	MBM10470	
	Hitachi	HM2142	
	Motorola	**MCM10470**	**4047**
	National	DM10470	
	Signetics	10470	
HM2110	AMD	**AM10415**	**3909**
	Fairchild	F10415	
	Fujitsu	MBM10415	
		MCM10415	
	Hitachi	HM2112	
	Motorola	**MCM10146**	**4046**
	National	DM10415	
	Siemens	GXB10415	
	Signetics	10415	
HM2112	AMD	**AM10415**	**3909**
	Fairchild	F10415	
	Fujitsu	MBM10415	
		MCM10415	
	Hitachi	HM2110	
	Motorola	**MCM10146**	**4046**
	National	DM10415	
	Siemens	GXB10415	
	Signetics	10415	
HM2142	AMD	AM10470	
	Fairchild	F10470	
	Fujitsu	MBM10470	
	Hitachi	HM10470	
	Motorola	**MCM10470**	**4047**
	National	DM10470	
	Signetics	10470	
HM25045	AMD	AM27S184	
	Fujitsu	MB7127	
	Harris	HM7684	
	MMI	6388	
		6388-1	
	National	**DM87S184**	**4057**
	Signetics	N82S184	
	TI	**TBP24SA81**	**4240**
HM2510	AMD	AM93415	
	AMI	4015	
	Fairchild	93415	
	Fujitsu	MBM93415	
	Hitachi	HM2511	
	Intel	2115A	
	Motorola	MCM2115	
	Signetics	N82S10	
		S82S10	
	TI	SN54S314	
		SN74S314	
HM2511	AMD	AM93415	
	AMI	4015	
	Fairchild	93415	
	Fujitsu	MBM93415	
	Hitachi	HM2510	
	Intel	2115A	
	Motorola	MCM2115	
	Signetics	N82S10	
		S82S10	
	TI	SN54S314	
		SN74S314	

◆ Discontinued

Bold face device numbers indicate manufacturers data is provided in the IC Master on the pages noted.

© IC MASTER 1984

Hitachi America, Ltd. (Cont'd)

Manufacturer Device	Replacement Source	Device	IC Master Page
HM4334	Fujitsu	MB8414	
	Harris	HM6514	
	Intersil	IM6514	
	MicroPwr	MP6514	
	Mitsubishi	M58981	
	National	NMC6514	
	NEC	μPD6514	
	OKI	**MSM5115**	**4118**
	RCA	MWS5514	
	SMOS	SRM6514	
	Toshiba	TC5514	
HM468A10	**Motorola**	**MCM68A10**	**4046**
HM4716	AMD	AM9016	
	Fairchild	F4116	
	Intel	2118	
	Intersil	IM7116	
	ITT	ITT4116	
	Mostek	MK4116	
	Motorola	MCM4116	
	National	MM5290	
	NEC	**μPB416**	**4073**
	Panasonic	MN4116	
	SGS	M4116	
	Siemens	HYB4116	
	Signetics	2690	
	TI	TMS4116	
HM4816	Hitachi	HM4816A	
	Intel	2118	
	Intersil	IM7118	
	Mostek	MK4516	
	National	NMC5295	
	NEC	μPD2118	
	TI	TMS4516	
HM4816A	Hitachi	HM4816	
	Intel	2118	
	Intersil	IM7118	
	Mostek	MK4516	
	National	NMC5295	
	NEC	μPD2118	
	TI	TMS4516	
HM4847	AMD	AM2147	
	AMI	4017	
	Fujitsu	MBM2147	
	Intel	2147	
	Intersil	IM2147	
	ITT	4547	
	Motorola	MCM2147	
	National	MM2147	
	NEC	μPD2147	
	Synertek	SY2147	
	TI	TMS2147	
	Toshiba	TMM315	
	Universal	UM2147	
HM4864	Fairchild	F4164	
		F64K	
	Fujitsu	MB8264	
		MB8266	
	IMS	IMS2600	
	Intel	2164	
	Motorola	MCM6665	
	National	NMC4164	
	NEC	μPD4164	
	OKI	MSM3764	
	TI	TMS4164	
	Toshiba	TMM4164	
HM6116	Fujitsu	MB8416	
	Harris	HM65162	
	IDT	IDT6116	
	MicroPwr	MP6116	
	Mostek	MK6116	
	Motorola	MCM6116	
	NEC	**μPD446**	**4090**
	RCA	CDM6116	
	SMOS	SRM2016	
	Toshiba	TC5517A	
		TC5517B	
HM6117	Fujitsu	MB8418	
	MicroPwr	MP6117	
	NEC	**μPD449**	**4093**
	RCA	CDM6118	
	SMOS	SRM2018	
	Toshiba	TC5518B	
HM6148	AMD	AM2148	
	Fairchild	93475	
	Fujitsu	MBM2148	
		MBM2149	
	Intel	2148H	
		2149H	
	National	NMC2148	

(Continued)

Manufacturer Device	Replacement Source	Device	IC Master Page
HM6148	Synertek	SY2148	
		SY2149	
HM6167	AMD	AM2167	
	IMS	IMS1400	
	IDT	IDT6167	
	Intel	2167	
	ITT	2167	
	Mitel	M58757	
	Mitsubishi	M5M2167	
	NEC	**μPD2167**	**4086**
	Synertek	**SY2167**	**4210**
	TI	TMS2167	
HM6168	AMD	AM2168	
		AM2169	
	Fujitsu	MB8168	
	IMS	IMS1420	
		IMS1421	
	Intel	2168	
	Mitsubishi	M5M2168	
	Synertek	**SY2168**	**4210**
	TI	TMS2168	
		TMS2169	
HM6264	Fujitsu	MB8464	
	Hitachi	HM6464	
	Mitsubishi	M5M5164	
		M5M5165	
	Toshiba	TC5564	
		TC5565	
HM6464	Fujitsu	MB8464	
	Hitachi	HM6264	
	Mitsubishi	M5M5164	
		M5M5165	
	Toshiba	TC5564	
		TC5565	
HN25044	AMD	AM27S32	
	Fairchild	93452	
	Fujitsu	MB7121	
	Harris	HM7642	
	MMI	6352-1	
	Motorola	MCM7642	
	National	**DM74S572**	**4057**
	NEC	μPB406	
	Signetics	N82S136	
	TI	**TBP24SA41**	**4239**
HN25085	AMD	AM27S185	
	Fujitsu	MB7128	
	Harris	HM7685	
	MMI	6389	
		6389-1	
		63S841	**4026**
	Motorola	**MCM7685**	**4047**
	National	**DM87S185**	**4057**
	Raytheon	29651	
		29651A	**4131**
	Signetics	N82HS185	
		N82S185	
	TI	**TBP24S81**	**542,4239**
HN25088	AMD	AM27S180	
		AM27S280	
	Fairchild	93450	
		93Z450	
	Fujitsu	MB7131	
	Intel	3608	
	MMI	6380-1	
	National	**DM87S180**	**4057**
		DM87S229	
	NEC	μPB408	
	Signetics	N82S180	
	TI	TBP28SA86	
HN25089	AMD	AM27PS181	
		AM27S181	
		AM27S281	
	Fairchild	93Z451	
		F93451	
	Fujitsu	MB7132	
	Harris	HM7681	
	Intel	3628	
		3628A	
		3628B	
	MMI	6381-1	
	Motorola	**MCM7681**	**4047**
	National	**DM87S181**	**4057**
		DM87S228	
	NEC	μPB417	
	Raytheon	29631	
		29631A	**4131**
		29633	
	Signetics	825181	
		N82HS181	
		N82S181	

(Continued)

Manufacturer Device	Replacement Source	Device	IC Master Page
HN25089	Supertex	SM82S181	
	TI	TBP28S86	
HN25168	AMD	AM27S190	
	Fairchild	93510	
		93Z510	
	Fujitsu	MB7137	
		MB7137E-W	
	Harris	HM76160	
	MMI	**63S1681**	**4026**
	Motorola	MCM6160	
	National	**DM87S190**	**4057**
	NEC	μPB409	
	Raytheon	**29683**	**4131**
	Signetics	N82S190	
	TI	TBP28SA166	
HN25169	AMD	AM27PS191	
		AM27S191	
	Fairchild	93511	
		93Z511	
	Fujitsu	MB7138	
		MB7138E-W	
	Harris	HM76161	
	MMI	**63S1681**	**4026**
	Motorola	**MCM76161**	**4047**
	National	**DM87S191**	**4057**
	NEC	μPB429	
	Raytheon	**29681**	**4131**
		29681A	**4131**
	Signetics	N82S191	
	TI	**TBP28S166**	**4247**
HN35600	Intel	4001	
HN35800	Intel	4308	
HN462532	Motorola	MCM2532	
	National	MM2532	
		NMC2532	
		TDA2530	
		TDA2532	
	Plessey	TDA2530	
	Siemens	TDA2530	
	SiliconG	SG2532	
	TI	TMS2532	
	Universal	UM2532	
HN462708	AMD	AM2708	
	Motorola	MC27A08	
		MCM2708	
	National	MM2708	
	Panasonic	MN2708	
	Rockwell	2708	
	TI	TMS2708	
HN462716	AMD	AM2716	
	Fujitsu	MB2716	
	Intel	2716	
	Mostek	MK2716	
	Motorola	MCM2716	
	National	MM2716	
	NEC	μPD2716	
	OKI	**MSM2716**	**4118**
	Panasonic	MN2716	
	SGS	M2716	
	TI	TMS2516	
HN462732	AMD	AM2732	
	Intel	2732	
		2732A	
		M2732	
	Mitsubishi	M5L2732	
	National	MM2732	
		NMC2732	
	NEC	μPD2732	
	Toshiba	TMM2732	
		TMM324C	
	Universal	UM2732	
HN46332	AMD	AM9232	
	AMI	S68322	
		S68A332	
	Fairchild	F3532	
	GI	R094132	
		T094132	
	GTEMicro	2332	
	Intersil	IM7332	
	Motorola	MC68332	
		MCM68332	
		MCM68A332	**4048**
	National	MM52132	
	NCR	2332	
		NCR2332	
	NEC	**μPD2332**	**4100**
	OKI	**MSM2932**	**4118**
	RCA	**CDM5333**	**1593**
	Rockwell	R2332	
	SiliconG	SG3532	
	SSS	SCM23C32	
	SMC	ROM4732	

(Continued)

Manufacturer Device	Replacement Source	Device	IC Master Page
HN46332	**Synertek**	**SY2332**	**4211**
	TI	**TMS4732**	**4226**
	Toshiba	TM2332	
		TMM333	
	Universal	UM2332	
	VTI	**VT2332**	**4249**
HN46830	Motorola	MCM68A30	
HN48016	Intel	2816	
	National	NMC2816	
	NCR	NCR2161	
	Rockwell	5213	
		52B13	
	SEEQ	5213	
		52B13	
	Xicor	**X2816A**	**547,4267,4268**
HN482764	AMD	AM2764	
	Fujitsu	MBM2764	
	Intel	2764	
		M2764	
	Intersil	IM2764	
	Mitel	M5L2764	
	Mitsubishi	M5L2764	
	Mostek	MK2764	
	National	NMC2764	
	NEC	μPD2764	
	SEEQ	5133	
	Toshiba	TMM2764	
HN48364	AMD	AM9264	
	AMI	S4264	
		S68A364	**3933**
	GTEMicro	2364-3	
	Mostek	MK36000-5	
	Motorola	MCM68365	
		MCM68366	
	National	MM52164	
	NCR	2364	
	NEC	UPD2/8364-30	
		μPD23/8364-30	
	OKI	MSM2965	
	Signetics	2664A-30	
	Synertek	**SY2364-3**	**4211**
	Toshiba	TMM2364	
	Weitek	SC8164	
HN613128	AMD	AM92128	
	AMI	**S23128**	**3935**
	GI	RO9128	
	Motorola	MCM63128	
	National	S2128	
	NCR	NCR23128	
	NEC	μPD2/83128	
		μPD23/83128	
	OKI	**MSM38128**	**4118**
	Signetics	**23128-30**	**4202**
	Synertek	SY23128	
	VTI	**VT23128**	**4252**
HN613256	AMD	AM92256	
	Fujitsu	MB83256	
	GI	RO9256	
	MicroPwr	MP2326	
	Mostek	MK38000	
	Motorola	MCM63256	
	NCR	23256	
	NEC	μPD2/83256	
		μPD23/83256	
	SMOS	SMM2326	
	Signetics	23256	
	Synertek	SY23256	
	Toshiba	TMM23256	
HN61364	AMD	AM9265	
	GI	RO9864	
	GTEMicro	G5365	
	Mostek	MK37000	
	RCA	CDM5365	
	Signetics	**2364-20**	**4196**
	Synertek	**SY2365**	**4211**
	Toshiba	TMM2365	
	VTI	**VT2365**	**4251**
TDA2002	NEC	μPC2002	
	SGS	TDA2002	
	Telefunken	TDA2002	

Hughes Aircraft, Solid State Products

Manufacturer Device	Replacement Source	Device	IC Master Page
HCMP1802A	**RCA**	**CDP1802**	**1591**
HCMP1823	**RCA**	**CDP1823**	**1594**
HCMP1824	**RCA**	**CDP1824**	**1594**
HCMP1831	**RCA**	**CDP1831**	**1593**
HCMP1832	**RCA**	**CDP1832**	**1593**
HCMP1833	**RCA**	**CDP1833**	**1593**
HCMP1834	**RCA**	**CDP1834**	**1593**

◆ Discontinued

The manufacturers report their devices can be used as direct replacements.
Performance details often differ, so compare the specifications considering your requirements.

Hughes Aircraft, Solid State Products (Cont'd)

Manufacturer Device	Replacement Source	Device	IC Master Page
HCMP1835	RCA	CDP1835	
HCMP1837	RCA	CDP1837	
HCMP1851	**RCA**	**CDP1851**	**1595**
HCMP1852	**RCA**	**CDP1852**	**1595**
HCMP1853	**RCA**	**CDP1853**	**1595**
HCMP1854	RCA	CDP1854	
HCMP1855	**RCA**	**CDP1855**	**1595**
HCMP1856	**RCA**	**CDP1856**	**1595**
HCMP1857	**RCA**	**CDP1857**	**1595**
HCMP1858	**RCA**	**CDP1858**	**1595**
HCMP1859	**RCA**	**CDP1859**	**1595**
HCMP1861	**RCA**	**CDP1861**	**1595**
HLCD0438	**AMI**	**S4521**	**2810**
	National	MM58438	
	RCA	CD0438	
HLCD0538	National	MM58538	
HLCD0539	National	MM58539	
HLCD0540	National	MM58540	
HLCD0548	National	MM58548	
HLCD7211	Intersil	ICL7211	
	RCA	**CD22104**	**839**
		CD22105	**839**
	TeledyneS	TSC7211	
HNVM3704	GI	ER3400	
	NCR	NCR3400	
	Nitron	NC7451	

Hybrid Systems

Manufacturer Device	Replacement Source	Device	IC Master Page
ADC542	Burr-Brown	ADC82	
	HybridSys	HSADC82	
ADC581	AD	ADADC84	
		ADADC85	
		ADADC85S	
	Burr-Brown	ADC84	
		ADC85	
	Datel	ADC-84	
		ADC-85	
		ADC-87	
		ADC-HX12B	
		ADC-HZ12B	
		ADC-HZ12BGZ	
	HybridSys	ADC581B	
		HSADC85	
		HSADC85C	**2983**
	DDC	ADH8585-1	
		DDC5240	
		DDCADC85	
		DDCADC87	
	MicroNet	MN5240	
		MNADC84	
		MNADC85	
		MNADC87	**3043**
ADC581B	AD	ADADC84	
		ADADC85	
		ADADC85S	
	Burr-Brown	ADC84	
		ADC85	
	Datel	ADC-84	
		ADC-85	
		ADC-87	
		ADC-HX12B	
		ADC-HZ12B	
		ADC-HZ12BGZ	
	HybridSys	ADC581	
		HSADC85	
		HSADC85C	**2983**
	DDC	ADH8585-1	
		DDC5240	
		DDCADC85	
		DDCADC87	
	MicroNet	MN5240	
		MNADC84	
		MNADC85	
		MNADC87	**3043**
DAC331-12	AD	AD7521	
	Datel	DAC-HA12B	
	Intersil	AD7521	
	MicroPwr	MP7521	
	National	AD7521	
		DAC1220	
		DAC1221	
		DAC1222	
DAC335	AD	ADDAC87	
	Burr-Brown	DAC851	
		DAC87	
	Datel	DAC-687	
		DAC-87	
		(Continued)	

Manufacturer Device	Replacement Source	Device	IC Master Page
DAC335	HybridSys	HSDAC87	
	MicroNet	**MNDAC87**	**3044**
DAC346	AD	AD370	
		AD371	
	HybridSys	DAC347	
		DAC356	
	MicroNet	**MN370**	**3044**
		MN371	**3044**
DAC347	AD	AD370	
		AD371	
	HybridSys	DAC346	
		DAC356	
	MicroNet	**MN370**	**3044**
		MN371	**3044**
DAC349	**MicroNet**	**MN3349**	**3044**
DAC356	AD	AD370	
		AD371	
	HybridSys	DAC346	
		DAC347	
	MicroNet	**MN370**	**3044**
		MN371	**3044**
DAC370	MicroPwr	MP370	
DAC377-18	MicroPwr	MP377-18	
DAC397-12	HyComp	DA4000	
	DDC	ADH030	
DAC9356	AD	ADDAC80	
		ADDAC85	
	Burr-Brown	DAC80	
		DAC85	
	Datel	DAC-85	
		DAC-HZ12B	
	HybridSys	HSDAC80	
	MicroNet	**DAC80**	**3044**
		DAC85	
	National	DAC1280	
		DAC1285	
	TeledyneP	TPDAC80	
DAC9377	MicroPwr	MP9377	
DAC9377-16	**MicroPwr**	**MP9377-16**	**3046**
HS2020	**MicroNet**	**MN2020**	**3042**
HS3020	**MicroNet**	**MN3020**	**3044**
HS3120	AD	AD7622	
	MicroPwr	MP7622	
	Siliconix	MP7622	
HS3140	Datel	DAC-HA14	
	MicroPwr	MP3140	
HS3860	AD	AD3860	
	DDC	DAC-SL	
	MicroNet	**MN3860**	**3044**
HS5131	**MicroNet**	**MN5131**	**3043**
HS5150	**MicroNet**	**MN5150**	**3043**
HS5216	**Datel**	**ADC-5216**	**2860**
	DDC	DDC5216	
	MicroNet	**MN5216**	**3043**
HS5250	MicroNet	MN5250	
HS5251	MicroNet	MN5251	
HS5252	MicroNet	MN5252	
HS5253	MicroNet	MN5253	
HS574	AD	AD574	
	MCE	MCE-574	
	MicroNet	MN574	
	MicroPwr	MP574	
HS7541	AD	AD7541	
	Datel	**DAC-7541**	**2863**
	Harris	HI-7541	
		HI17541	
	Intersil	AD7541	
		ICL7541	
	MicroPwr	MP7541	
		MP7621	
	TeledyneP	TP-7541	
		TP7541	
	TeledyneS	7541	
HSADC82	Burr-Brown	ADC82	
	HybridSys	ADC542	
HSADC85	AD	ADADC84	
		ADADC85	
		ADADC85S	
	Burr-Brown	ADC84	
		ADC85	
	Datel	ADC-84	
		ADC-85	
		ADC-87	
		ADC-HX12B	
		ADC-HZ12B	
		ADC-HZ12BGZ	
	HybridSys	ADC581	
		ADC581B	
		HSADC85C	**2983**
	DDC	ADH8585-1	
		DDC5240	
		DDCADC85	
		(Continued)	

Manufacturer Device	Replacement Source	Device	IC Master Page
HSADC85	DDC	DDCADC87	
	MicroNet	MN5240	
		MNADC84	
		MNADC85	
		MNADC87	**3043**
HSADC85C	AD	ADADC84	
		ADADC85	
		ADADC85S	
	Burr-Brown	ADC84	
		ADC85	
	Datel	ADC-84	
		ADC-85	
		ADC-87	
		ADC-HX12B	
		ADC-HZ12B	
		ADC-HZ12BGZ	
	HybridSys	ADC581	
		ADC581B	
		HSADC85	
	DDC	ADH8585-1	
		DDC5240	
		DDCADC85	
		DDCADC87	
	MicroNet	MN5240	
		MNADC84	
		MNADC85	
		MNADC87	**3043**
HSDAC80	AD	ADDAC80	
		ADDAC85	
	Burr-Brown	DAC80	
		DAC85	
	Datel	DAC-85	
		DAC-HZ12B	
	HybridSys	**DAC9356**	**2986**
	MicroNet	**DAC80**	**3044**
		DAC85	
	National	DAC1280	
		DAC1285	
	TeledyneP	TPDAC80	
HSDAC87	AD	ADDAC87	
	Burr-Brown	DAC851	
		DAC87	
	Datel	DAC-687	
		DAC-87	
	HybridSys	DAC335	
	MicroNet	**MNDAC87**	**3044**
HSREF01	**MicroPwr**	**MP5532**	**3529**
		REF-01	
	Motorola	**MC1404-10**	**3535**
		MC1504-10	**3535**
	PMI	REF-01	
	Raytheon	**REF-01**	**3584**
	TeledyneS	9496	
MN5214	**AD**	**AD5214**	**2838**
	Datel	**ADC-5214**	**2860**
	MicroNet	**MN5214**	**3043**
	TeledyneP	TP5214	
R675-3	AD	AD2702	
	HyComp	HC2702	
		HC2712	
R675-4	AD	AD2700	
	HyComp	HC2700	
		HC2710	
R675-5	AD	AD2701	
	HyComp	HC2701	
		HC2710	

HyComp

Manufacturer Device	Replacement Source	Device	IC Master Page
DA4000	HybridSys	DAC397-12	
	DDC	ADH030	
HC1437	TeledyneP	1437	
HC2711	AD	AD2710	
	HyComp	HC201	
HC4000	DDC	ADH-03011	

ILC Data Device Corporation

Manufacturer Device	Replacement Source	Device	IC Master Page
AD00401	**MicroNet**	**MN5243**	**3043**
ADC4454	Datel	ADC-EH12B	
	TeledyneP	TP4134	
ADH-03011	HyComp	HC4000	
ADH-03012	HyComp	HC4000	
ADH-03013	HyComp	HC4000	
ADH030	HybridSys	DAC397-12	
	HyComp	DA4000	
ADH050	**MicroNet**	**MN050**	**3045**
ADH8585-1	AD	ADADC84	
		ADADC85	
		ADADC85S	
	Burr-Brown	ADC84	
		ADC85	
		(Continued)	

Manufacturer Device	Replacement Source	Device	IC Master Page
ADH8585-1	Datel	ADC-84	
		ADC-85	
		ADC-87	
		ADC-HX12B	
		ADC-HZ12B	
		ADC-HZ12BGZ	
	HybridSys	ADC581	
		ADC581B	
		HSADC85	
		HSADC85C	**2983**
	DDC	DDC5240	
		DDCADC85	
		DDCADC87	
	MicroNet	MN5240	
		MNADC84	
		MNADC85	
		MNADC87	**3043**
BUS-8554	CTI	CT-3231	
		CT-3232	
	DDC	BUS63102	
BUS-8556	CTI	CT-1077	
		CT-2077	
		CT-3077	
BUS63102	CTI	CT-3231	
		CT-3232	
	DDC	BUS-8554	
DAC-SL	AD	AD3860	
	HybridSys	HS3860	
	MicroNet	**MN3860**	**3044**
DDC5101	**Datel**	**ADC-5101**	**2860**
	MicroNet	**MN5101**	**3043**
DDC5210	**AD**	**AD5210**	**2838**
	Datel	**ADC-5210**	**2860**
	MicroNet	**MN5210**	**3043**
DDC5211	**AD**	**AD5211**	**2838**
	Datel	**ADC-5211**	**2860**
	MicroNet	**MN5211**	**3043**
DDC5212	AD	AD5212	
	Datel	**ADC-5212**	**2860**
	MicroNet	**MN5212**	**3043**
DDC5216	**Datel**	**ADC-5216**	**2860**
	HybridSys	HS5216	
	MicroNet	**MN5216**	**3043**
DDC5240	AD	ADADC84	
		ADADC85	
		ADADC85S	
	Burr-Brown	ADC84	
		ADC85	
	Datel	ADC-84	
		ADC-85	
		ADC-87	
		ADC-HX12B	
		ADC-HZ12B	
		ADC-HZ12BGZ	
	HybridSys	ADC581	
		ADC581B	
		HSADC85	
		HSADC85C	**2983**
	DDC	ADH8585-1	
		DDCADC85	
		DDCADC87	
	MicroNet	MN5240	
		MNADC84	
		MNADC85	
		MNADC87	**3043**
DDCADC85	AD	ADADC84	
		ADADC85	
		ADADC85S	
	Burr-Brown	ADC84	
		ADC85	
	Datel	ADC-84	
		ADC-85	
		ADC-87	
		ADC-HX12B	
		ADC-HZ12B	
		ADC-HZ12BGZ	
	HybridSys	ADC581	
		ADC581B	
		HSADC85	
		HSADC85C	**2983**
	DDC	ADH8585-1	
		DDC5240	
		DDCADC87	
	MicroNet	MN5240	
		MNADC84	
		MNADC85	
		MNADC87	**3043**
DDCADC87	AD	ADADC84	
		ADADC85	
		ADADC85S	
	Burr-Brown	ADC84	
		ADC85	
		(Continued)	

◆ Discontinued

Bold face device numbers indicate manufacturers data is provided in the IC Master on the pages noted.

© IC MASTER 1984

ILC Data Device Corporation (Cont'd)

Manufacturer Device	Replacement Source	Device	IC Master Page
DDCADC87	Datel	ADC-84	
		ADC-85	
		ADC-87	
		ADC-HX12B	
		ADC-HZ12B	
		ADC-HZ12BGZ	
	HybridSys	ADC581	
		ADC581B	
		HSADC85	
		HSADC85C	**2983**
	DDC	ADH8585-1	
		DDC5240	
		DDCADC85	
	MicroNet	MN5240	
		MNADC84	
		MNADC85	
		MNADC87	**3043**
THA-05203	**AD**	**HTC-0300**	**2847**
	TeledyneP	TP-4860	

Industrial Micro-Systems Inc.

Manufacturer Device	Replacement Source	Device	IC Master Page
IMS1400	AMD	AM2167	
	Hitachi	HM6167	
	IDT	IDT6167	
	Intel	2167	
	ITT	2167	
	Mitel	M58757	
	Mitsubishi	M5M2167	
	NEC	**μPD2167**	**4086**
	Synertek	**SY2167**	**4210**
	TI	TMS2167	
IMS1420	AMD	AM2168	
		AM2169	
	Fujitsu	MB8168	
	Hitachi	HM6168	
	IMS	IMS1421	
	Intel	2168	
	Mitsubishi	M5M2168	
	Synertek	**SY2168**	**4210**
	TI	TMS2168	
		TMS2169	
IMS1421	AMD	AM2168	
		AM2169	
	Fujitsu	MB8168	
	Hitachi	HM6168	
	IMS	IMS1420	
	Intel	2168	
	Mitsubishi	M5M2168	
	Synertek	**SY2168**	**4210**
	TI	TMS2168	
		TMS2169	
IMS2600	Fairchild	F4164	
		F64K	
	Fujitsu	MB8264	
		MB8266	
	Hitachi	HM4864	
	Intel	2164	
	Motorola	MCM6665	
	National	NMC4164	
	NEC	μPD4164	
	OKI	MSM3764	
	TI	TMS4164	
	Toshiba	TMM4164	
IMS2620	Fujitsu	MB81416	
	TI	TMS4416	
IMS2630	Intel	2187	
IMS3630	SEEQ	52B33	
	Xicor	**X2864**	**4267,4269**

Intech Microcircuits Division

Manufacturer Device	Replacement Source	Device	IC Master Page
0405H	AD	MDG-0405	
0605H	AD	MDG-0605	
0805H	AD	MDG	
2910	Intech	2913	
	TI	TCM2910	
2911	TI	TCM2911	
2913	Intech	2910	
	TI	TCM2910	
2914	TI	TCM2914	
~~DAC-HK12BGC~~	~~**Datel**~~	~~**DAC-HK12BGC**~~	~~**2861**~~
DAC-HK12BMM	**Datel**	**DAC-HK12BMM**	**2861**
DAS5712	DataTrans	DT5712	
DAS5714	DataTrans	DT5714	
DAS5716	DataTrans	DT5716	

Integrated Device Technology

Manufacturer Device	Replacement Source	Device	IC Master Page
IDT6116	Fujitsu	MB8416	
	Harris	HM65162	
	Hitachi	HM6116	
	MicroPwr	MP6116	
	Mostek	MK6116	
	Motorola	MCM6116	
	NEC	**μPD446**	**4090**
	RCA	CDM6116	
	SMOS	SRM2016	
	Toshiba	TC5517A	
		TC5517B	
IDT6167	AMD	AM2167	
	Hitachi	HM6167	
	IMS	IMS1400	
	Intel	2167	
	ITT	2167	
	Mitel	M58757	
	Mitsubishi	M5M2167	
	NEC	**μPD2167**	**4086**
	Synertek	**SY2167**	**4210**
	TI	TMS2167	

Intel

Manufacturer Device	Replacement Source	Device	IC Master Page
1101	Solitron	μA2556	
		μA2656	
		μA3556	
		μA3656	
2102	SGS	M2102	
2114	AMD	AM9114	
	EMM-SESCO	2114	
	Fairchild	F2114	
	Hitachi	HM472114	
	Intel	2114A	
	Intersil	IM2114	
	MicroPwr	MP2114	
	Motorola	MCM2114	
	National	MM2114	
	NEC	μPD2114	
	OKI	**MSM2114**	**4118**
	Panasonic	MN2114	
	SMOS	SRM2114	
	SSS	SCM21C14	
	Synertek	**SY2114**	**4210**
	TI	TMS4045	
	Toshiba	TMM314	
		TMM314A	
2115A	AMD	AM93415	
	AMI	4015	
	Fairchild	93415	
	Fujitsu	MBM93415	
	Hitachi	HM2510	
		HM2511	
	Motorola	MCM2115	
	Signetics	N82S10	
		S82S10	
	TI	SN54S314	
		SN74S314	
2118	Hitachi	HM4816	
		HM4816A	
	Intersil	IM7118	
	Mostek	MK4516	
	National	NMC5295	
	NEC	μPD2118	
	TI	TMS4516	
2125A	AMI	S6508	
	Fairchild	4736B	
	Harris	**HM6508**	**3965**
	Motorola	MCM2125	
	National	MM74C929	
		NMC6508	
	NEC	μPD443	
	SSS	SCM21C02	
	Toshiba	TC5508	
2128	**AMD**	**AM9128**	**3917**
	Fairchild	F3528	
	Fujitsu	MB8128	
	Motorola	MCM2016	
	National	NMC2116	
	OKI	**MSM5128**	**4118**
	Synertek	SY2128	
		SY2129	
	TI	TMS4016	
	Toshiba	TMM2016	
2141A	EMM-SESCO	4044	
	Intel	2141	
	Intersil	IM7141	
	Mostek	MK4104	
	Motorola	MCM6641	
	National	MM2141	

(Continued)

Manufacturer Device	Replacement Source	Device	IC Master Page
2141A	NEC	μPD4104	
	TI	TMS4044	
	Zilog	Z6104	
2142	National	MM2142	
2142-2	National	NMC2142A	
2147	AMD	AM2147	
	AMI	4017	
	Fujitsu	MBM2147	
	Hitachi	HM4847	
	Intersil	IM2147	
	ITT	4547	
	Motorola	MCM2147	
	National	MM2147	
	NEC	μPD2147	
	Synertek	SY2147	
	TI	TMS2147	
	Toshiba	TMM315	
	Universal	UM2147	
2147-3	Fujitsu	MBM2147H	
2148H	AMD	AM2148	
	Fairchild	93475	
	Fujitsu	MBM2148	
		MBM2149	
	Hitachi	HM6148	
	Intel	2149H	
	National	NMC2148	
	Synertek	SY2148	
		SY2149	
2149H	AMD	AM2148	
	Fairchild	93475	
	Fujitsu	MBM2148	
		MBM2149	
	Hitachi	HM6148	
	Intel	2148H	
	National	NMC2148	
	Synertek	SY2148	
		SY2149	
2164	Fairchild	F4164	
		F64K	
	Fujitsu	MB8264	
		MB8266	
	Hitachi	HM4864	
	IMS	IMS2600	
	Motorola	MCM6665	
	National	NMC4164	
	NEC	μPD4164	
	OKI	MSM3764	
	TI	TMS4164	
	Toshiba	TMM4164	
2167	AMD	AM2167	
	Hitachi	HM6167	
	IMS	IMS1400	
	IDT	IDT6167	
	ITT	2167	
	Mitel	M58757	
	Mitsubishi	M5M2167	
	NEC	**μPD2167**	**4086**
	Synertek	**SY2167**	**4210**
	TI	TMS2167	
2168	AMD	AM2168	
		AM2169	
	Fujitsu	MB8168	
	Hitachi	HM6168	
	IMS	IMS1420	
		IMS1421	
	Mitsubishi	M5M2168	
	Synertek	**SY2168**	**4210**
	TI	TMS2168	
		TMS2169	
2187	IMS	IMS2630	
23128	Mitsubishi	M5L23128	
2316	AMD	AM9218	
	Fairchild	3516	
		68316	
		F3516	
		F35316	
		F68316	**1464**
	GI	R03-9316	
	GTEMicro	2316	
	Mostek	MK34000	
	Motorola	MCM68316	
		MCM68A316	
		MM2316	
	National	MM52116	
		MM5258	
	NCR	2316	
		NCR2316	
	NEC	μPD2316	
	OKI	**MSM2916**	**4118**
	Rockwell	R2316	
	SGS	M2316	
	TI	SBP8316	

(Continued)

Manufacturer Device	Replacement Source	Device	IC Master Page
2316	Toshiba	TMM331A	
		TMM334	
2332	AMD	AM9233	
	AMI	**S2333**	**3932**
	Fairchild	F3533	
	GI	R09433	
	NCR	2333	
		NCR2333	
	RCA	**CDM5332**	**1593**
	Signetics	2332	
	SSS	SCM23C33	
	Synertek	**SY2333**	**4211**
	Universal	UM2333-45	
	VTI	**VT2333**	**4249**
2364A	MicroPwr	MP2365	
	SMOS	SMM2365	
	Toshiba	TC5364	
27128	AMD	27128	
		AM27128	**3929**
	Fujitsu	MBM27128	
	Mitsubishi	M5L27128	
		M5L27C128	
	SEEQ	5143	
2716	AMD	AM2716	
	Fujitsu	MB2716	
	Hitachi	HN462716	
	Mostek	MK2716	
	Motorola	MCM2716	
	National	MM2716	
	NEC	μPD2716	
	OKI	**MSM2716**	**4118**
	Panasonic	MN2716	
	SGS	M2716	
	TI	TMS2516	
27256	**AMD**	**AM27256**	**3930**
2732	AMD	AM2732	
	Hitachi	HN462732	
	Intel	2732A	
		M2732	
	Mitsubishi	M5L2732	
	National	MM2732	
		NMC2732	
	NEC	μPD2732	
	Toshiba	TMM2732	
		TMM324C	
	Universal	UM2732	
2732A	AMD	AM2732	
	Hitachi	HN462732	
	Intel	2732	
		M2732	
	Mitsubishi	M5L2732	
	National	MM2732	
		NMC2732	
	NEC	μPD2732	
	Toshiba	TMM2732	
		TMM324C	
	Universal	UM2732	
2764	AMD	AM2764	
	Fujitsu	MBM2764	
	Hitachi	HN482764	
	Intel	M2764	
	Intersil	IM2764	
	Mitel	M5L2764	
	Mitsubishi	M5L2764	
	Mostek	MK2764	
	National	NMC2764	
	NEC	μPD2764	
	SEEQ	5133	
	Toshiba	TMM2764	
2816	Hitachi	HN48016	
	National	NMC2816	
	NCR	NCR2161	
	Rockwell	5213	
		52B13	
	SEEQ	5213	
		52B13	
	Xicor	**X2816A**	**547,4267,4268**
2910A	TI	TCM2910A	
2912	GTEMicro	G8912	
	Intel	ID2912	
	Mostek	MK5912	
		MK8912	
	National	TP3040	
	Plessey	MV8912	
	TI	TCM2912	
		TCM2912B	
2913	TI	TCM2913	
2914	TI	TCM2914	
3001	Signetics	3001	
3002	Signetics	3002	

◆ Discontinued

The manufacturers report their devices can be used as direct replacements.
Performance details often differ, so compare the specifications considering your requirements.

Intel (Cont'd)

Manufacturer Device	Replacement Source	Device	IC Master Page
3101	AMD	31L01	
		AM27LS02	
		AM27S02	
		AM3101	
		AM3101A	
		SN7489-1	
	Fairchild	74S289	
	Motorola	MC4064	
	National	DM7589	
	NEC	μPB2089	
		μPB2289	
	Signetics	3101	
		3101A	
		7489	
		N8225	
		S3101	
	TI	**SN7489**	**951**
3106	AMD	AM27LS00	
	Fairchild	93421	
		93L420	
		93L421	
	Motorola	MC4256	
	National	93L420	
		93L421	
		DM74S200	
	NEC	μPB2200	
	Signetics	74200	
		N82S116	
		N82S16	
	TI	SN74LS200	
		SN74S200	
		SN74S201	**993**
3107	AMD	AM27LS01	
		AM29720	
	Fairchild	93411	
		93L411	
	National	DM74S206	
		N82S117	
		N82S17	
	Signetics	74S301	
		N82S17	
	TI	SN74206	
		SN74S301	**1016**
3216	AMD	AM3216	
3226	AMD	AM3226	
3242	Motorola	MC3242A	
3245	Motorola	MC3245	
	National	DS3245	
3404	**Signetics**	**N8T3404**	**876**
3608	AMD	AM27S180	
		AM27S280	
	Fairchild	93450	
		93Z450	
	Fujitsu	MB7131	
	Hitachi	HN25088	
	MMI	6380-1	
	National	**DM87S180**	**4057**
		DM87S229	
	NEC	μPB408	
	Signetics	N82S180	
	TI	TBP28SA86	
3622	AMD	AM27S13	
	Fairchild	93446	
	Harris	HM7621	
	MMI	6306-1	
		63S241	**4026**
	Motorola	**MCM7621**	**4047**
	National	**DM74S571**	**4057**
	Raytheon	**29611**	**4131**
	Signetics	N82S131	
	TI	SN74S571	
3628	AMD	AM27PS181	
		AM27S181	
		AM27S281	
	Fairchild	93Z451	
		F93451	
	Fujitsu	MB7132	
	Harris	HM7681	
	Hitachi	HN25089	
	Intel	3628A	
		3628B	
	MMI	6381-1	
	Motorola	**MCM7681**	**4047**
	National	**DM87S181**	**4057**
		DM87S228	
	NEC	μPB417	
	Raytheon	29631	
		29631A	**4131**
		29633	
	Signetics	825181	
		N82HS181	
		N82S181	
	Supertex	SM82S181	
	TI	TBP28S86	
3628A	AMD	AM27PS181	
		AM27S181	
		AM27S281	
	Fairchild	93Z451	
		F93451	
	Fujitsu	MB7132	
	Harris	HM7681	
	Hitachi	HN25089	
	Intel	3628	
		3628B	
	MMI	6381-1	
	Motorola	**MCM7681**	**4047**
	National	**DM87S181**	**4057**
		DM87S228	
	NEC	μPB417	
	Raytheon	29631	
		29631A	**4131**
		29633	
	Signetics	825181	
		N82HS181	
		N82S181	
	Supertex	SM82S181	
	TI	TBP28S86	
3628B	AMD	AM27PS181	
		AM27S181	
		AM27S281	
	Fairchild	93Z451	
		F93451	
	Fujitsu	MB7132	
	Harris	HM7681	
	Hitachi	HN25089	
	Intel	3628	
		3628A	
	MMI	6381-1	
	Motorola	**MCM7681**	**4047**
	National	**DM87S181**	**4057**
		DM87S228	
	NEC	μPB417	
	Raytheon	29631	
		29631A	**4131**
		29633	
	Signetics	825181	
		N82HS181	
		N82S181	
	Supertex	SM82S181	
	TI	TBP28S86	
3632	**AMD**	**AM27S43**	**3908**
	Fujitsu	MB7142	
	Harris	76321	
		HM76321	
	MMI	**53S3281**	**4026**
		63S3281	**4026**
	National	87S321	
		DM87S321	**4057**
	Raytheon	**29671**	**4131**
	Signetics	N82S321	
4001	Hitachi	HN35600	
4201	National	DP4201	
4308	Hitachi	HN35800	
4702	AMD	AM4702	
5101	AMI	S5101	
	SSS	SCM5101	
8021	Signetics	8021	
8035	AMD	8035	
	Fujitsu	MBL8035	
	National	INS8035	
	NEC	μPD8035	
	Signetics	SCN8035	
8039	AMD	D8039	
	Fujitsu	MBL8039	
	National	INS8039	
	NEC	μPD8039	
	Signetics	SCN8039	
8041A	AMD	8041	
	NEC	μPD8041A	
8048	AMD	8048	
	Fujitsu	MBL8048	
	National	INS8048	
	NEC	μPD8048	
	Signetics	SCN8048	
	Toshiba	TMP8048	
8049	Fujitsu	MBL8049	
	National	INS8049	
	NEC	μPD8049	
	Signetics	SCN8049	
8080A	AMD	9080	
		9080A	
		AM9080	
		(Continued)	

Manufacturer Device	Replacement Source	Device	IC Master Page
8080A	National	DP8080A	
		INS8080A	
	NEC	μPD8080	
	TI	TMS8080	
		TMS8080A	
8085	AMD	8085	
		8085A	
	Intel	8085A	
	NEC	μPD8085	
	Toshiba	TMP8085A	
8085A	AMD	8085	
		8085A	
	Intel	8085	
	NEC	μPD8085	
	Toshiba	TMP8085A	
8086	AMD	D8086	
		MD8086	
	Fujitsu	MBL8086	
	Intel	MD8086	
	NEC	μPD8086	
8088	AMD	8088	
	Fujitsu	MBL8088	
80C31	**Signetics**	**SCC80C31**	**1688**
80C39	**Signetics**	**SCC80C39**	**1686**
80C49	**Signetics**	**SCC80C49**	**1686**
80C51	**Signetics**	**SCC80C51**	**1688**
8101A	AMD	AM2101A	
		AM9101	
	NEC	μPD2101	
	Synertek	SY2101	
8102A	NEC	μPD2102	
	SGS	M330	
8111	AMD	AM2111A	
		AM9111	
	NEC	μPD2111	
	Synertek	SY2111	
8155	AMD	8155	
	NEC	μPD8155	
	Toshiba	TMP8155	
8156	AMD	8156	
	NEC	μPD8156	
8156-2	NEC	μPD8156-2	
8214	AMD	8214	
	National	INS8214	
	NEC	μPB8214	
8216	National	DP8216	
		INS8216	
	NEC	μPB8216	
8224	AMD	8224	
	National	DP8224	
		INS8224	
	NEC	μPB8224	
8226	National	DP8226	
		INS8226	
	NEC	μPB8226	
8228	AMD	8228	
	National	DP8228	
		INS8228	
	NEC	μPB8228	
	TI	**SN74S428**	**1034**
		TIM8228	
8231	**AMD**	**AM9511**	**1440**
		AM9511A	**1440**
	Intel	MC8231	
8232	**AMD**	**AM9512**	**1441**
8237	AMD	AM9517	
		AM9517A	**1438,1443**
8237-5	NEC	μPB8237-5	
8237A-4	AMD	AM9517A-4	
8237A-5	**AMD**	**AM9517A-5**	**1438,1443**
8238	AMD	8238	
	National	DP8238	
		INS8238	
	NEC	μPB8238	
	TI	**SN74S438**	**1034**
		TIM8238	
8243	AMD	8243	
	Fujitsu	MB8243	
	NEC	μPD8243	
	Signetics	8243	
8251A	AMD	8251	
		AM9551	**1436**
	National	DP8251	
		INS8251	
	NEC	μPB8251	
	SMC	COM8251A	
	Western	TR1983	
8253	AMD	8253	
	National	INS8253	
	NEC	μPD8253	

Manufacturer Device	Replacement Source	Device	IC Master Page
8255A-5	AMD	8255A-5	
		AM9555	
	National	INS8255	
	NEC	μPD8225	
		μPD8255	
8257	AMD	8257	
	NEC	μPD8257	
8259	AMD	D8259	
	Fujitsu	MBL8259	
	National	INS8259	
	NEC	μPD8259	
8272	Intel	8274	
	NEC	**μPD765**	**1549**
	SMC	COM7201	
		FDC765	
8274	Intel	8272	
	NEC	**μPD765**	**1549**
	SMC	COM7201	
		FDC765	
8279	AMD	8279-5	
	NEC	μPD8279-5	
8282	Fujitsu	MBL8282	
	NEC	μPB8282	
8283	AMD	AM8282	
		AM8283	
	Fujitsu	MBL8283	
	NEC	μPB8283	
8284	AMD	8284	
	Fujitsu	MBL8284	
	NEC	μPB8284	
8286	AMD	8304	
		DP8304	
	Fujitsu	MBL8286	
	Intel	8304	
	National	DP8304	
	NEC	μPB8286	
8287	AMD	8287	
	NEC	μPD8287	
8288	AMD	8288	
	Fujitsu	MBL8288	
	NEC	μPB8288	
8289	Fujitsu	MBL8289	
8304	AMD	8304	
		DP8304	
	Fujitsu	MBL8286	
	Intel	8286	
	National	DP8304	
	NEC	μPB8286	
8355	AMD	8355	
	NEC	μPD8355	
	Toshiba	TMP8355	
8702	AMD	8702	
8741A	NEC	μPD8741A	
8748	National	NS80CX48	
	NEC	μPD8748	
8755	NEC	μPD8755	
8755A	NEC	μPD8755A	
	Toshiba	TMP8755	
ID2910	National	TP3020	
ID2911	National	TP3021	
ID2912	GTEMicro	G8912	
	Intel	2912	
	Mostek	MK5912	
		MK8912	
	National	TP3040	
	Plessey	MV8912	
	TI	TCM2912	
		TCM2912B	
ISBC108	AMD	LM108	
	AD	**AD108**	**3351**
	Fairchild	μA108	
		μA725	
	Intersil	ICL108	
		LM108	
	LinearTech	LM108	
		LM108A	
		OP-05	
	MicroPwr	MP5501	
		MP5505	
		MPLM108A	
		OP-08	
	Motorola	LM108	
	National	LM108	
		LM108A	
	NEC	μPC154	
	PMI	OP-01	
		OP-05	**3566**
		OP-06	
		OP-07	**3566**
		PM108	
		PM725	
	Raytheon	**OP-05**	**3592**
		(Continued)	

◆ Discontinued

Bold face device numbers indicate manufacturers data is provided in the IC Master on the pages noted.

© IC MASTER 1984

Intel (Cont'd)

Manufacturer Device	Replacement Source	Device	IC Master Page
ISBC108	**Raytheon**	**OP-07**	**3592**
		RC725	
		RM725	
	Signetics	LM108	
ISBC80/30	National	BLC80/316	
M2716	Fujitsu	MBM2716	
	Mostek	MKB2716	
	National	MM2716M	
M2732	AMD	AM2732	
	Hitachi	HN462732	
	Intel	2732	
		2732A	
	Mitsubishi	M5L2732	
	National	MM2732	
		NMC2732	
	NEC	μPD2732	
	Toshiba	TMM2732	
		TMM324C	
	Universal	UM2732	
M2764	AMD	AM2764	
	Fujitsu	MBM2764	
	Hitachi	HN482764	
	Intel	2764	
	Intersil	IM2764	
	Mitel	M5L2764	
	Mitsubishi	M5L2764	
	Mostek	MK2764	
	National	NMC2764	
	NEC	μPD2764	
	SEEQ	5133	
	Toshiba	TMM2764	
M3601	**Harris**	**HM7610-2**	**3944**
	MMI	5300-1	
		53S140	**4026**
	National	**DM54S387**	**4057**
	Signetics	**S82S126**	**532**
	TI	**TBP24SA10M**	**542,4238**
M3602	MMI	5305-1	
		53S240	**4026**
	National	**DM54S570**	**4057**
	Signetics	**S82S130**	**532**
M3604	MMI	5340-1	
	National	**DM54S475**	**4057**
		DM77S295	
		DM87S295	
	Signetics	S82S140	
M3605	Fujitsu	MB7121E-W	
	Harris	**HM7642-2**	**3948**
	MMI	5352-1	
	National	**DM54S572**	**4057**
	Signetics	S82S136	
	TI	**TBP24SA41M**	**4239**
M3621	**Harris**	**HM7611-2**	**3944**
	MMI	5301-1	
		53S141	**4026**
	National	**DM54S287**	**4057**
	Signetics	**S82S129**	**532**
M3622	MMI	5306-1	
		53S241	**4026**
	National	**DM54S571**	**4057**
	Signetics	**S82S131**	**532**
M3624	MMI	5341-1	
	National	**DM54S474**	**4057**
	Signetics	**S82S141**	**532**
	TI	**TBP28S46M**	**542,543,4245**
MC8231	**AMD**	**AM9511**	**1440**
		AM9511A	**1440**
	Intel	8231	
MD8086	AMD	D8086	
		MD8086	
	Fujitsu	MBL8086	
	Intel	8086	
	NEC	μPD8086	
SBC-337	National	BLC-337	

Interdesign

Manufacturer Device	Replacement Source	Device	IC Master Page
1G000	Ferranti	ULA1G000	
1U000	Ferranti	ULA1U000	
2U000	Ferranti	ULA2U000	
3U000	Ferranti	ULA3U000	
ADVFC32	Cherry	CS4000	
MCA	Exar	XRCMA	
	MasterLogic	ML100	
	MCE	MGC110A	
	Monosil	ML100	
	Nitron	NC5100	
MCB	Exar	XRCMB	
	MasterLogic	ML150	
	MCE	MGC160B	
	Monosil	ML150	
	Nitron	NC5150	
MCC	Exar	XRMC	
	MasterLogic	ML200	
	MCE	MGC210C	
	Monosil	ML200	
	Nitron	NC5200	
MCD	Exar	XRCMD	
	MasterLogic	ML350	
	MCE	MGC350D	
	Monosil	ML350	
	Nitron	NC5350	
MCF	Cherry	CS3000	
	Exar	XRF100	
	Interdesign	**MOF**	**4746**
	MCE	MCE-A20F	
MOA	Exar	XRA100	
	Interdesign	**MOM**	**4746**
	MCE	MCE-A20	
		MCE-A20A	
MOB	Exar	XRB100	
	MCE	MCE-A20B	
MOC	Exar	XRC100A	
	MCE	MCE-A20C	
MOD	Exar	XRD100	
	MCE	MCE-A40D	
MOE	Cherry	CS2000	
	Exar	XRE100	
	MCE	MCE-A20E	
MOF	Cherry	CS3000	
	Exar	XRF100	
	Interdesign	**MCF**	**4746**
	MCE	MCE-A20F	
MOG	Cherry	CS2500	
	Exar	XRG100	
	MCE	MCE-A20G	
MOH	MCE	MCE-A20H	
MOJ	Exar	XRJ100	
	MCE	MCE-A20J	
MOL	Cherry	CS3200	
	MCE	MCE-A20L	
MOM	Exar	XRA100	
	Interdesign	**MOA**	**4746**
	MCE	MCE-A20	
		MCE-A20A	
MON	MCE	MCE-A20N	
MOP	MCE	MCE-A20P	
MSA	Ferranti	ULA2C000	
MSB	Ferranti	ULA5C000	
MSC	Ferranti	ULA9C000	
MUA	Ferranti	ULA2000	
MUB	Ferranti	ULA2L000	
MUC	Ferranti	ULA2H000	

International Microcircuits, Inc.

Manufacturer Device	Replacement Source	Device	IC Master Page
MASTER MOS	Monosil	Master MOS	

Intersil

Manufacturer Device	Replacement Source	Device	IC Master Page
AD101	AMD	LM101	
	AD	AD101	
	Fairchild	μA101	
	LinearTech	LM101	
	Motorola	LM101	
	Raytheon	LM101	
	SiliconG	SG101	
	TI	LM101	
	Thomson-CSF	SFC2101	
AD301	AD	AD301	
	Fairchild	μA301A	
	LinearTech	LM301	
		LM301A	
	Motorola	LM301	
	National	LM301	
		LM301A	
	NEC	μPC157	
		μPC301	
	Raytheon	LM301	
	RCA	CA301	
		LM301	
	SiliconG	SG301	
	TI	LM301	
		LM301A	
	Thomson-CSF	SFC2301	
	Toshiba	TA7506	
AD308	AMD	LM308	
	AD	**AD308**	**3351**
	Burr-Brown	3500	
		3501	
	Fairchild	μA308	
	Intersil	LM308	
	MicroPwr	MP5505	
		MPLM308	**3529**
	Motorola	LM308	
	National	LM308	
	Raytheon	LM308	
	SiliconG	SG308	
	Thomson-CSF	SFC2308	
AD503	AD	AD0042	
		AD503	
	Intersil	LH0042	
	National	LH0042	
AD590	AD	AD590	
AD741	**AD**	**AD741**	**3351**
	Fairchild	3871	
		μA741	
	Hitachi	HA17741	
	Intersil	ICL741	
	MicroPwr	MP5501	
		MP5502	**3529**
		OP-02	**3529**
	Mostek	MK3871	
	Motorola	LM741	
		MC1741	
	National	LM741	
	NEC	μPC151	
		μPC741	
	PMI	OP-01	
		OP-02	**3566**
		PM741	
		SSS741	
	Raytheon	RC741	
		RM741	
	RCA	CA3056	
		CA741	
	Signetics	μA741	
	SiliconG	SG300	
		SG741	
	TI	μA741	
	Thomson-CSF	SFC2741	
	Toshiba	TA7504	
AD7520	AD	AD7520	
	Datel	DAC-HA10B	
	MicroPwr	MP7520	
	National	AD7520	
		DAC1020	
		DAC1021	
		DAC1022	
AD7521	AD	AD7521	
	Datel	DAC-HA12B	
	HybridSys	DAC331-12	
	MicroPwr	MP7521	
	National	AD7521	
		DAC1220	
		DAC1221	
		DAC1222	
AD7523	AD	AD7523	
	Datel	**DAC-7523**	**2863**
	MicroPwr	MP7523	
AD7533	AD	AD7533	
	Datel	**DAC-7533**	**2863**
	MicroPwr	MP7533	
	National	AD7533	
AD7541	AD	AD7541	
	Datel	**DAC-7541**	**2863**
	Harris	HI-7541	
		HI17541	
	HybridSys	HS7541	
	Intersil	ICL7541	
	MicroPwr	MP7541	
		MP7621	
	TeledyneP	TP-7541	
		TP7541	
	TeledyneS	7541	
ADC0801	National	ADC0801	
	TI	ADC0801	
ADC0802	National	ADC0802	
	TI	ADC0802	
ADC0803	**Datel**	**ADC-830**	**2863**
	National	ADC0803	
	TI	ADC0803	
ADC0804	National	ADC0804	
	TI	ADC0804	
D123	Siliconix	D123	
D125	Siliconix	D125	
	TeledyneC	CDR125	
DG111	Siliconix	DGM111	
DG118	Siliconix	DG172	
DG123	Siliconix	DG123	
DG125	Siliconix	DG125	
DG126	National	AH0126	
	Siliconix	DG126	
DG129	National	AH0129	
	Siliconix	DG129	
DG133	National	AH0133	
	Siliconix	DG133	
DG134	National	AH0134	
	Siliconix	DG134	
DG139	National	AH0139	
	Siliconix	DG139	
DG140	National	AH0140	
	Siliconix	DG140	
DG141	National	AH0141	
	Siliconix	DG141	
DG142	National	AH0142	
	Siliconix	DG142	
DG143	National	AH0143	
	Siliconix	DG143	
DG144	National	AH0144	
	Siliconix	DG144	
DG145	National	AH0145	
	Siliconix	DG145	
DG146	National	AH0146	
	Siliconix	DG146	
DG151	National	AH0151	
	Siliconix	DG151	
DG152	National	AH0152	
	Siliconix	DG152	
DG153	National	AH0153	
	Siliconix	DG153	
DG154	National	AH0154	
		AM0154	
	Siliconix	DG154	
DG161	National	AH0161	
	Siliconix	DG161	
DG162	National	AH0162	
	Siliconix	DG162	
DG163	National	AH0163	
		AM0163	
	Siliconix	DG163	
DG164	National	AH0164	
		AM0164	
	Siliconix	DG164	
DG180	Siliconix	DG180	
DG181	**Harris**	**HI381**	**2877**
		HI5048	
	Intersil	IH5048	
	Siliconix	DG181	
		DG381	
DG182	Siliconix	DG182	
	TI	TL182	
DG183	Siliconix	DG183	
DG184	**Harris**	**HI384**	**2877**
		HI5049	
	Intersil	IH5049	
	Siliconix	DG184	
		DG384	
DG185	Harris	HI5045	
	Intersil	IH5045	
	Siliconix	DG185	
		DG5045	
	TI	TL185	
DG186	Siliconix	DG186	
DG187	**Harris**	**HI387**	**2877**
		HI5050	
	Intersil	IH5050	
	Siliconix	DG187	
		DG387	
DG188	Harris	HI5042	
	Intersil	IH5042	
	Siliconix	DG188	
		DG5042	
	TI	TL188	
DG189	Siliconix	DG189	
DG190	Harris	HI5051	
	Intersil	IH5051	
	Siliconix	DG190	
DG191	Harris	HI5043	
	Intersil	IH5043	
	Siliconix	DG191	
		DG243	
		DG5043	
G115	Siliconix	G115	
G116	Siliconix	G116	
G117	Siliconix	G117	
G118	Siliconix	G118	

◆ Discontinued

The manufacturers report their devices can be used as direct replacements.
Performance details often differ, so compare the specifications considering your requirements.

Intersil (Cont'd)

Manufacturer Device	Replacement Source	Device	IC Master Page
G119	Siliconix	G119	
G123	Siliconix	G123	
HA2500	**Harris**	**HA-2500**	**3396**
HA2502	**Datel**	**AM-450-2M**	**2864**
	Harris	HA-2502	
HA2505	AD	AD540	
	Burr-Brown	3503	
	Datel	**AM-450-2**	**2864**
	Harris	HA-2505	
	Intersil	HA2525	
	MicroPwr	MP5501	
	PMI	OP-01	
HA2510	**Harris**	**HA-2510**	**3398**
HA2512	Harris	HA-2512	
HA2515	Harris	HA-2515	
HA2522	**Datel**	**AM-452-2M**	**2864**
	Harris	HA-2522	
HA2525	AD	AD540	
	Burr-Brown	3503	
	Datel	**AM-450-2**	**2864**
	Harris	HA-2505	
	Intersil	HA2505	
	MicroPwr	MP5501	
	PMI	OP-01	
HA2600	**Harris**	**HA-2600**	**3406**
	Motorola	MC1556	
	SiliconG	SG1556	
	TeledyneP	1326	
	TI	MC1556	
HA2602	**Datel**	**AM-460-2M**	**2864**
	Harris	HA-2602	
HA2605	**Datel**	**AM-460-2**	**2864**
	Harris	HA-2605	
	Motorola	MC1456	
	SiliconG	SG1456	
	TI	MC1456	
HA2620	AD	AD507	
	Burr-Brown	3508	
	Datel	**AM-462-1**	**2864**
		AM-462-2	**2864**
	Harris	**HA-2620**	**3408**
		HA-2622	
		HA-2625	
	Intersil	HA2622	
		HA2625	
HA2622	AD	AD507	
	Burr-Brown	3508	
	Datel	**AM-462-1**	**2864**
		AM-462-2	**2864**
	Harris	**HA-2620**	**3408**
		HA-2622	
		HA-2625	
	Intersil	HA2620	
		HA2625	
HA2625	AD	AD507	
	Burr-Brown	3508	
	Datel	**AM-462-1**	**2864**
		AM-462-2	**2864**
	Harris	**HA-2620**	**3408**
		HA-2622	
		HA-2625	
	Intersil	HA2620	
		HA2622	
ICL108	AMD	LM108	
	AD	**AD108**	**3351**
	Fairchild	μA108	
		μA725	
	Intel	ISBC108	
	Intersil	LM108	
	LinearTech	LM108	
		LM108A	
		OP-05	
	MicroPwr	MP5501	
		MP5505	
		MPLM108A	
		OP-08	
	Motorola	LM108	
	National	LM108	
		LM108A	
	NEC	μPC154	
	PMI	OP-01	
		~~OP-05~~	~~3566~~
		OP-06	
		OP-07	**3566**
		PM108	
		PM725	
	Raytheon	**OP-05**	**3592**
		OP-07	**3592**
		RC725	

(Continued)

Manufacturer Device	Replacement Source	Device	IC Master Page
ICL108	Raytheon	RM725	
	Signetics	LM108	
ICL7106	**MicroPwr**	**MP7138**	**3046**
	TeledyneS	TSC7106	
ICL7107	TeledyneS	TSC7107	
ICL7109	Datel	ADC-7109	
	TeledyneS	TSC7109	
ICL7116	TeledyneS	TSC7116	
ICL7117	TeledyneS	TSC7117	
ICL7126	TeledyneS	TSC7126	
ICL7135	**TeledyneS**	**TSC7135**	**3095**
ICL7211	Hughes	HLCD7211	
	RCA	**CD22104**	**839**
		CD22105	**839**
	TeledyneS	TSC7211	
ICL741	**AD**	**AD741**	**3351**
	Fairchild	3871	
		μA741	
	Hitachi	HA17741	
	Intersil	AD741	
	MicroPwr	MP5501	
		MP5502	**3529**
		OP-02	**3529**
	Mostek	MK3871	
	Motorola	LM741	
		MC1741	
	National	LM741	
	NEC	μPC151	
		μPC741	
	PMI	OP-01	
		OP-02	**3566**
		PM741	
		SSS741	
	Raytheon	RC741	
		RM741	
	RCA	CA3056	
		CA741	
	Signetics	μA741	
	SiliconG	SG300	
		SG741	
	TI	μA741	
	Thomson-CSF		
		SFC2741	
	Toshiba	TA7504	
ICL741HS	PMI	OP-19	
ICL7541	AD	AD7541	
	Datel	**DAC-7541**	**2863**
	Harris	HI-7541	
		HI17541	
	HybridSys	HS7541	
	Intersil	AD7541	
	MicroPwr	MP7541	
		MP7621	
	TeledyneP	TP-7541	
		TP7541	
	TeledyneS	7541	
ICL7555	Exar	XRL555	
ICL7556	Exar	XRL556	
ICL7650	**Datel**	**AM-7650**	**2865**
	Telmos	TM7650	
ICL7660	Datel	VI-7660	
	TeledyneC	TSC7660	
ICL7667	AMD	MMH0026	
	National	DS0026	
		MH0026	
ICL8007	AD	AD8007	
ICL8013	AD	AD530	
		AD533	
	Burr-Brown	**4203**	**2852**
ICL8021	Fairchild	μA776	
	Harris	**HA-2720**	**3416**
	Intersil	LM4250	
	Motorola	MC1776	
	National	LM4250	
	SiliconG	SG4250	
	Solitron	UC4250	
ICL8038	**Exar**	**XR8038**	**3374**
ICL8069	AD	AD589	
	Ferranti	ZN423	
	MicroPwr	**MP5010**	**3529**
	National	LM113	
		LM313	
	TeledyneS	9491	
ICL8240	Exar	XR2240	
	Fairchild	μA2240	
	TI	μA2240	
ICM7211	TeledyneS	TSC7211	
ICM7212	TeledyneS	TSC7212	
ICM7272AM	TeledyneC	TSC701AM	
IH200	AD	ADG200	
	Harris	HI200	
	MicroPwr	MP200	

(Continued)

Manufacturer Device	Replacement Source	Device	IC Master Page
IH200	PMI	SW-05	
	Siliconix	DG200	
IH5009	National	AH5009	
		AM9709	
		AM97C09	
IH5010	National	AH5010	
		AM9710	
		AM97C10	
IH5011	National	AH5011	
		AM9711	
		AM97C11	
IH5012	National	AH5012	
		AM9712	
		AM97C12	
IH5013	National	AH5013	
IH5014	National	AH5014	
IH5015	National	AH5015	
IH5016	National	AH5016	
IH5040	Harris	HI5040	
	Siliconix	DG5040	
IH5041	Harris	HI5041	
	Siliconix	DG5041	
IH5042	Harris	HI5042	
	Intersil	DG188	
	Siliconix	DG188	
		DG5042	
	TI	TL188	
IH5043	Harris	HI5043	
	Intersil	DG191	
	Siliconix	DG191	
		DG243	
		DG5043	
IH5044	Harris	HI5044	
	Siliconix	DG5044	
IH5045	Harris	HI5045	
	Intersil	DG185	
	Siliconix	DG185	
		DG5045	
	TI	TL185	
IH5046	Harris	HI5046	
IH5047	Harris	HI5047	
IH5048	**Harris**	**HI381**	**2877**
		HI5048	
	Intersil	DG181	
	Siliconix	DG181	
		DG381	
IH5049	**Harris**	**HI384**	**2877**
		HI5049	
	Intersil	DG184	
	Siliconix	DG184	
		DG384	
IH5050	**Harris**	**HI387**	**2877**
		HI5050	
	Intersil	DG187	
	Siliconix	DG187	
		DG387	
IH5051	Harris	HI5051	
	Intersil	DG190	
	Siliconix	DG190	
IH5052	Siliconix	DG211	
IH6108	AD	AD7501	
	Burr-Brown	MPC8S	
	Datel	**MX-808**	**2864**
	Harris	HI-508	
		HI508	
		HI508A	
	MicroPwr	MP7501	
		MP7508	
	National	LF11508	
		LF13508	
	PMI	DMX-88	
		MUX-08	
		MUX-88	
	Siliconix	DG508	
		DG508A	
	TeledyneP	4554	
IH6116	**Burr-Brown**	**MPC16S**	**2850**
	Datel	**MV-1606**	**2864**
		MX-1606	**2864**
	Harris	HI1840	
		HI506	
		HI506A	
	PMI	MUX-16	
IH6208	**Burr-Brown**	**MPC4D**	**2850**
	Datel	**MXD-409**	**2864**
	Harris	HI-509	
		HI509	
		HI509A	
	MicroPwr	MP7509	
	National	LF11509	
		LF13509	
	PMI	MUX-24	

(Continued)

Manufacturer Device	Replacement Source	Device	IC Master Page
IH6208	Siliconix	DG509	
		DG509A	
	TeledyneP	4553	
IH6216	AD	AD7507	
	Burr-Brown	**MPC8D**	**2850**
	Datel	**MVD-807**	**2864**
		MXD-807	**2864**
	Harris	HI507	
		HI507A	
	MicroPwr	MP7507	
	PMI	MUX-28	
	Siliconix	DG507	
		DG507A	
	TeledyneP	4551	
IM2114	AMD	AM9114	
	EMM-SESCO	2114	
	Fairchild	F2114	
	Hitachi	HM472114	
	Intel	2114	
		2114A	
	MicroPwr	MP2114	
	Motorola	MCM2114	
	National	MM2114	
	NEC	μPD2114	
	OKI	**MSM2114**	**4118**
	Panasonic	MN2114	
	SMOS	SRM2114	
	SSS	SCM21C14	
	~~Synertek~~	~~SY2114~~	~~4210~~
	TI	TMS4045	
	Toshiba	TMM314	
		TMM314A	
IM2147	AMD	AM2147	
	AMI	4017	
	Fujitsu	MBM2147	
	Hitachi	HM4847	
	Intel	2147	
	ITT	4547	
	Motorola	MCM2147	
	National	MM2147	
	NEC	μPD2147	
	Synertek	SY2147	
	TI	TMS2147	
	Toshiba	TMM315	
	Universal	UM2147	
IM2764	AMD	AM2764	
	Fujitsu	MBM2764	
	Hitachi	HN482764	
	Intel	2764	
		M2764	
	Mitel	M5L2764	
	Mitsubishi	M5L2764	
	Mostek	MK2764	
	National	NMC2764	
	NEC	μPD2764	
	SEEQ	5133	
	Toshiba	TMM2764	
IM5623	AMD	AM27S11	
		AM27S21	
	Harris	HM7611	
	MMI	6301-1	
		63S141	**4026**
	National	**DM74S287**	**4057**
	Signetics	N82S129	
	TI	**TBP24S10**	
			542,4238
IM6100	**Harris**	**HM6100**	**1488**
IM6101	Harris	HD6101	
IM6504	Fujitsu	MB8404	
	Harris	HM6504	
	MicroPwr	MP6504	
	National	NMC6504	
	RCA	CDM5104	
	SMOS	SRM6504	
	Toshiba	TC5504	
IM6514	Fujitsu	MB8414	
	Harris	HM6514	
	Hitachi	HM4334	
	MicroPwr	MP6514	
	Mitsubishi	M58981	
	National	NMC6514	
	NEC	μPD6514	
	~~OKI~~	~~MSM5115~~	~~4116~~
	RCA	MWS5514	
	SMOS	SRM6514	
	Toshiba	TC5514	
IM6518-1	**Harris**	**HM6518**	**3965**
	National	MM74C930	
IM6551	National	MM74C920	
	NEC	μPD5101	
IM6561	**Harris**	**HM6561**	**3965**

◆ Discontinued

Bold face device numbers indicate manufacturers data is provided in the IC Master on the pages noted.

Intersil (Cont'd)

Manufacturer Device	Replacement Source	Device	IC Master Page
IM7116	AMD	AM9016	
	Fairchild	F4116	
	Hitachi	HM4716	
	Intel	2118	
	ITT	ITT4116	
	Mostek	MK4116	
	Motorola	MCM4116	
	National	MM5290	
	NEC	**μPB416**	**4073**
	Panasonic	MN4116	
	SGS	M4116	
	Siemens	HYB4116	
	Signetics	2690	
	TI	TMS4116	
IM7118	Hitachi	HM4816	
		HM4816A	
	Intel	2118	
	Mostek	MK4516	
	National	NMC5295	
	NEC	μPD2118	
	TI	TMS4516	
IM7141	EMM-SESCO	4044	
	Intel	2141	
		2141A	
	Mostek	MK4104	
	Motorola	MCM6641	
	National	MM2141	
	NEC	μPD4104	
	TI	TMS4044	
	Zilog	Z6104	
IM7332	AMD	AM9232	
	AMI	S68322	
		S68A332	
	Fairchild	F3532	
	GI	RO94132	
		TO94132	
	GTEMicro	2332	
	Hitachi	HN46332	
	Motorola	MC68332	
		MCM68332	
		MCM68A332	**4048**
	National	MM52132	
	NCR	2332	
		NCR2332	
	NEC	**μPD2332**	**4100**
	OKI	**MSM2032**	**4118**
	RCA	**CDM5333**	**1593**
	Rockwell	R2332	
	SiliconG	SG3532	
	SSS	SCM23C32	
	SMC	ROM4732	
	Synertek	**SY2332**	**4211**
	TI	**TMS4732**	**4226**
	Toshiba	TM2332	
		TMM333	
	Universal	UM2332	
	VTI	**VT2332**	**4249**
IM7364	AMI	S68364	
	GI	RO9464	
	GTEMicro	G5364	
	MicroPwr	MP2364	
	Mitsubishi	M5L2364	
	Mostek	MK36000	
	Motorola	**MCM68364**	**4048,4054**
	National	MM5235	
	NCR	NCR2364	
	RCA	**CDM5364**	**1593**
	SMOS	SMM2364	
	SGS	M36000	
	Signetics	2664A	
	SSS	SCM23C64	
		SCM23C65	
	SMC	ROM36000	
	Synertek	**SY2364**	**4211**
	TI	**TMS4764**	**4225**
	Toshiba	TM2364	
	VTI	**VT2364**	**4250**
LF155	AMD	LF155	
	Motorola	LF155	
	National	LF155	
	PMI	OP-15	
		PM155	
	Thomson-CSF	TDC0155	
LF156	AMD	LF156	
	MicroPwr	OP-16	
	National	LF156	
	PMI	OP-16	
			(Continued)

Manufacturer Device	Replacement Source	Device	IC Master Page
LF156	PMI	PM156	
	Thomson-CSF	TDC0156	
LF157	AMD	LF157	
	MicroPwr	OP-17	
	National	LF157	
	PMI	OP-17	
		PM157	
	Signetics	LF157	
	Thomson-CSF	TDC0157	
LF355	AMD	LF355	
	Motorola	LF355	
	National	LF355	
	PMI	PM355	
LF356	AMD	LF356	
	Motorola	LF356	
	National	LF356	
	PMI	PM356	
	Signetics	LF356	
LF357	AMD	LF357	
	AnalogSys	LF357	
	Motorola	LF357	
	National	LF357	
	PMI	PM357	
LH0042	AD	AD0042	
		AD503	
	Intersil	AD503	
	National	LH0042	
LH2101	AMD	LH2101	
	National	LH2101	
	Raytheon	LH2101	
LH2108	National	LH2108	
	PMI	PM2108	
LH2108A	National	LH2108A	
	PMI	PM2108A	
LH2110	National	LH2110	
LH2111	AMD	LH2111	
	National	LH2111	
	Raytheon	LH2111	
LH2208A	National	LH2208A	
	PMI	PM2208A	
LH2301	AMD	LH2301	
	National	LH2301	
LH2308	National	LH2308	
	PMI	PM2308	
LH2308A	National	LH2308A	
	PMI	PM2308A	
LH2310	National	LH2310	
LH2311	AMD	LH2311	
	National	LH2311	
LM105	AMD	LM105	
	Fairchild	μA105	
	National	LM105	
	SiliconG	SG105	
	Thomson-CSF	SFC2105	
LM107	AMD	LM107	
	AD	**AD741S**	**3351**
	LinearTech	LM107	
	National	LM107	
	Raytheon	LM107	
	SiliconG	SG107	
	TI	LM107	
	Thomson-CSF	SFC2107	
LM108	AMD	LM108	
	AD	**AD108**	**3351**
	Fairchild	μA108	
		μA725	
	Intel	ISBC108	
	Intersil	ICL108	
	LinearTech	LM108	
		LM108A	
		OP-05	
	MicroPwr	MP5501	
		MP5505	
		MPLM108A	
		OP-08	
	Motorola	LM108	
	National	LM108	
		LM108A	
	NEC	μPC154	
	PMI	OP-01	
		OP-05	**3566**
		OP-06	
		OP-07	**3566**
		PM108	
		PM725	
	Raytheon	**OP-05**	**3592**
		OP-07	**3592**
		RC725	
			(Continued)

Manufacturer Device	Replacement Source	Device	IC Master Page
LM108	Raytheon	RM725	
	Signetics	LM108	
LM110	AMD	LM110	
	National	LM110	
	SiliconG	SG110	
LM111	AMD	LM111	
	AD	AD111	
	Fairchild	μA111	
	Motorola	LM111	
	National	LM111	
	Raytheon	LM111	
	Signetics	LM111	
	SiliconG	SG111	
	TI	LM111	
	Thomson-CSF	SFC2111	
LM302	AMD	LM302	
	National	LM302	
	SiliconG	SG302	
LM305	AMD	LM305	
	Fairchild	μA305	
	National	LM305	
	NEC	μPC141	
	SiliconG	SG305	
	Thomson-CSF	SFC2305	
LM307	AMD	LM307	
	AD	**AD741J**	**3351**
	LinearTech	LM307	
	Motorola	LM307	
	National	LM307	
	Raytheon	LM307	
	RCA	CA307	
	SiliconG	SG307	
	TI	LM307	
	Thomson-CSF	SFC2307	
LM308	AMD	LM308	
	AD	**AD308**	**3351**
	Burr-Brown	3500	
		3501	
	Fairchild	μA308	
	Intersil	AD308	
	MicroPwr	MP5505	
		MPLM308	**3529**
	Motorola	LM308	
	National	LM308	
	Raytheon	LM308	
	SiliconG	SG308	
	Thomson-CSF	SFC2308	
LM310	AMD	LM310	
	National	LM310	
	PMI	BUF-03	
	SiliconG	SG310	
	Thomson-CSF	SFC2310	
LM311	AMD	LM311	
	AD	AD311	
	Fairchild	μA2903	
		μA311	
	Motorola	LM2903	
		LM311	
	National	LM2903	
		LM311	
	NEC	μPC271	
		μPC311	
	Raytheon	LM311	
	RCA	**CA311**	**3598**
		LM311	
	Signetics	LM2903	
		LM311	
	SiliconG	SG311	
	TI	LM2903	
		LM311	
	Thomson-CSF	SFC2311	
		SFC3111	
LM4250	Fairchild	μA776	
	Harris	**HA-2720**	**3416**
	Intersil	ICL8021	
	Motorola	MC1776	
	National	LM4250	
	SiliconG	SG4250	
	Solitron	UC4250	
LM723	Fairchild	μA723	
	Hitachi	HA17723	
	Motorola	**MC1723**	**3532**
	National	LM723	
	Raytheon	RC723	
		RM723	
	RCA	**CA723**	**3602**
			(Continued)

Manufacturer Device	Replacement Source	Device	IC Master Page
LM723	RCA	LM723	
	SGS	L123	
	Signetics	μA723	
	SiliconG	SG723	
	TI	μA723	
	Thomson-CSF	SFC2723	
LM740	Signetics	μA740	
LM748	AMD	LM201	
	AD	AD201	
	Fairchild	μA201	
		μA748	
	Intersil	μA748	
	Motorola	LM201	
		MC1748	
	National	LM201	
		LM748	
	Plessey	SL748	
	RCA	CA201	
		CA748	
		LM748	
	SiliconG	SG201	
		SG748	
	TI	LM201	
		SN72748P	
		μA748	
	Thomson-CSF	SFC2201	
		SFC2748	
NE592	**Signetics**	**NE592**	**3675**
NE592-8	TI	NE592-8	
SE592	Motorola	SE592	
	Signetics	**SE592**	**3675**
μA733	Fairchild	μA733	
	Hitachi	HA17733	
	Motorola	MC1733	
		NE592	
	National	LM733	
	Signetics	μA733	
	SiliconG	SG733	
	TI	μA733	
μA748	AMD	LM201	
	AD	AD201	
	Fairchild	μA201	
		μA748	
	Intersil	LM748	
	Motorola	LM201	
		MC1748	
	National	LM201	
		LM748	
	Plessey	SL748	
	RCA	CA201	
		CA748	
		LM748	
	SiliconG	SG201	
		SG748	
	TI	LM201	
		SN72748P	
		μA748	
	Thomson-CSF	SFC2201	
		SFC2748	
μA777	SiliconG	SG777	
	TI	μA777	

ITT Semiconductors

Manufacturer Device	Replacement Source	Device	IC Master Page
2167	AMD	AM2167	
	Hitachi	HM6167	
	IMS	IMS1400	
	IDT	IDT6167	
	Intel	2167	
	Mitel	M58757	
	Mitsubishi	M5M2167	
	NEC	**μPD2167**	**4086**
	Synertek	**SY2167**	**4210**
	TI	TMS2167	
4547	AMD	AM2147	
	AMI	4017	
	Fujitsu	MBM2147	
	Hitachi	HM4847	
	Intel	2147	
	Intersil	IM2147	
	Motorola	MCM2147	
	National	MM2147	
	NEC	μPD2147	
	Synertek	SY2147	
	TI	TMS2147	
	Toshiba	TMM315	
	Universal	UM2147	
88205	Mitel	MH88205	
		MH88305	

◆ Discontinued

The manufacturers report their devices can be used as direct replacements.
Performance details often differ, so compare the specifications considering your requirements.

ITT Semiconductors (Cont'd)

Manufacturer Device	Replacement Source	Device	IC Master Page
DF320	Mitel	MT4320	
	Nitron	NC2320	
	Siliconix	DF320	
DF322	Mitel	MT4322	
	Nitron	NC2322	
ITT4116	AMD	AM9016	
	Fairchild	F4116	
	Hitachi	HM4716	
	Intel	2118	
	Intersil	IM7116	
	Mostek	MK4116	
	Motorola	MCM4116	
	National	MM5290	
	NEC	**μPD416**	**4073**
	Panasonic	MN4116	
	SGS	M4116	
	Siemens	HYB4116	
	Signetics	2690	
	TI	TMS4116	
TBA950	National	TBA950	
	Plessey	TBA950	

Lambda Semiconductors

Manufacturer Device	Replacement Source	Device	IC Master Page
LAS1405	Fairchild	SH0323	
		SH323	
		μA78H05	
	Lambda	LAS1905	
	LinearTech	LM323	
	Micropac	M78H05	
	Motorola	**LM323**	**3531**
		MC78T05C	
	National	LM323	
	SiliconG	SG323	
LAS1412	Fairchild	μA78H12A	
	Lambda	LAS1912	
	Micropac	M78H12	
LAS14U	Fairchild	μA78HGA	
	Lambda	LAS19U	
	LinearTech	LM350	
	Motorola	**LM350**	**3532**
	National	LM350	
	SiliconG	SG350	
	TI	LM350	
LAS18μ	Fairchild	μA79HG	
LAS1905	Fairchild	SH0323	
		SH323	
		μA78H05	
	Lambda	LAS1405	
	LinearTech	LM323	
	Micropac	M78H05	
	Motorola	**LM323**	**3531**
		MC78T05C	
	National	LM323	
	SiliconG	SG323	
LAS1912	Fairchild	μA78H12A	
	Lambda	LAS1412	
	Micropac	M78H12	
LAS19U	Fairchild	μA78HGA	
	Lambda	LAS14U	
	LinearTech	LM350	
	Motorola	**LM350**	**3532**
	National	LM350	
	SiliconG	SG350	
	TI	LM350	
LAS3905	Fairchild	μA78P05	
	Micropac	M78P05	
		MLAS3905	
LAS3912	Micropac	MLAS3912	
LAS3915	Micropac	MLAS3915	
LLM209	AMD	LM209	
	Fairchild	μA209	
	Motorola	LM209	
	National	LM209	
	SiliconG	SG209	
	Thomson-CSF	SFC2209	
LLM220	National	LM220	
	SiliconG	SG220	
LLM223	**Motorola**	**LM223**	**3531**
	National	LM223	
	SiliconG	SG223	
	Thomson-CSF	TDE0123	
LLM309	AMD	LM309	
	Fairchild	μA309	
		μA7805	
	Lambda	LMC7805	
		LμA7805	
	Motorola	LM309	

(Continued)

Manufacturer Device	Replacement Source	Device	IC Master Page
LLM309	**Motorola**	**MC7805**	**3531**
	National	LM309	
		LM7805	
	NEC	μPC7805	
	SGS	L7805	
		L7810	
	SiliconG	SG309	
		SG340-05	
		SG340-5	
	TI	μA7805	
	Thomson-CSF	SFC2309	
	Toshiba	TA78005	
LLM320	National	LM320	
LLM340	National	LM340	
LMC7805	AMD	LM309	
	Fairchild	μA309	
		μA7805	
	Lambda	LLM309	
		LμA7805	
	Motorola	LM309	
		MC7805	**3531**
	National	LM309	
		LM7805	
	NEC	μPC7805	
	SGS	L7805	
		L7810	
	SiliconG	SG309	
		SG340-05	
		SG340-5	
	TI	μA7805	
	Thomson-CSF	SFC2309	
	Toshiba	TA78005	
LMC7806	Fairchild	μA7806	
	Lambda	LμA7806	
	Motorola	**MC7806**	**3531**
	SiliconG	SG340-6	
		SG7806	
	TI	μA7806	
LMC7808	Fairchild	μA7808	
	Lambda	LμA7808	
	Motorola	**MC7808**	**3531**
	NEC	μPC7808	
	SiliconG	SG340-8	
		SG7808	
	TI	LM340-8	
		μA7808	
LMC7812	Fairchild	μA7812	
	Lambda	LμA7812	
	Motorola	**MC7812**	**3531**
	National	LM7812	
	NEC	μPC7812	
	SGS	L7812	
	SiliconG	SG7812	
	TI	μA7812	
	Toshiba	TA78012	
LMC7815	Fairchild	μA7815	
		μA78L15	
	Lambda	LμA7815	
	Motorola	**MC7815**	**3531**
		MC78L15	
	National	LM340-15	
		LM340LA-15	
		LM340T-15	
		LM7815	
		LM78L15	
	NEC	μPC7815	
		μPC78L15	
	SGS	L7815	
	SiliconG	SG340-15	
		SG7815	
	TI	LM340-15	
		μA7815	
		μA78L15	
	Thomson-CSF	SFC2815	
	Toshiba	TA78015	
LMC7818	Fairchild	μA7818	
	NEC	μPC7818	
	SiliconG	SG340-18	
		SG7818	
	TI	LM340-18	
		μA7818	
LMC7824	Fairchild	μA7824	
	Lambda	LμA7824	
	Motorola	**MC7824**	**3532**
	NEC	μPC7824	
	SGS	L7824	
	SiliconG	SG7824	
	TI	LM340-24	
		μA7824	

Manufacturer Device	Replacement Source	Device	IC Master Page
LMC7902	Fairchild	μA7902	
	Lambda	LμA7902	
	Motorola	MC7902	
LMC7905	Fairchild	μA7905	
		μA79M05	
	Lambda	LμA7905	
	Motorola	MC7905	
	National	LM320MP5	
		LM7905	
		LM79M05	
	SiliconG	SG120-5	
		SG320-05	
		SG320P-5	
		SG7905	
	TI	μA7905	
	Fairchild	MC7905	
	Motorola	MC7905	
	SiliconG	SG7905	
LMC7906	Motorola	MC7906	
	TI	μA7906	
LMC7908	Fairchild	MC7908	
		μA7908	
		μA79M08	
	Lambda	LμA7908	
	Motorola	MC7908	
	SiliconG	SG7908	
	TI	μA7908	
		μA79M08	
LMC7924	Motorola	MC7924	
	TI	μA7924	
LμA7805	AMD	LM309	
	Fairchild	μA309	
		μA7805	
	Lambda	LLM309	
		LMC7805	
	Motorola	LM309	
		MC7805	**3531**
	National	LM309	
		LM7805	
	NEC	μPC7805	
	SGS	L7805	
		L7810	
	SiliconG	SG309	
		SG340-05	
		SG340-5	
	TI	μA7805	
	Thomson-CSF	SFC2309	
	Toshiba	TA78005	
LμA7806	Fairchild	μA7806	
	Lambda	LMC7806	
	Motorola	**MC7806**	**3531**
	SiliconG	SG340-6	
		SG7806	
	TI	μA7806	
LμA7808	Fairchild	μA7808	
	Lambda	LMC7808	
	Motorola	**MC7808**	**3531**
	NEC	μPC7808	
	SiliconG	SG340-8	
		SG7808	
	TI	LM340-8	
		μA7808	
LμA7812	Fairchild	μA7812	
	Lambda	LMC7812	
	Motorola	**MC7812**	**3531**
	National	LM7812	
	NEC	μPC7812	
	SGS	L7812	
	SiliconG	SG7812	
	TI	μA7812	
	Toshiba	TA78012	
LμA7815	Fairchild	μA7815	
		μA78L15	
	Lambda	LMC7815	
	Motorola	**MC7815**	**3531**
		MC78L15	
	National	LM340-15	
		LM340LA-15	
		LM340T-15	
		LM7815	
		LM78L15	
	NEC	μPC7815	
		μPC78L15	
	SGS	L7815	
	SiliconG	SG340-15	
		SG7815	
	TI	LM340-15	
		μA7815	
		μA78L15	

(Continued)

Manufacturer Device	Replacement Source	Device	IC Master Page
LμA7815	Thomson-CSF	SFC2815	
	Toshiba	TA78015	
LμA7824	Fairchild	μA7824	
	Lambda	LMC7824	
	Motorola	**MC7824**	**3532**
	NEC	μPC7824	
	SGS	L7824	
	SiliconG	SG7824	
	TI	LM340-24	
		μA7824	
LμA7902	Fairchild	μA7902	
	Lambda	LMC7902	
	Motorola	MC7902	
LμA7905	Fairchild	μA7905	
		μA79M05	
	Lambda	LMC7905	
	Motorola	MC7905	
	National	LM320MP5	
		LM7905	
		LM79M05	
	SiliconG	SG120-5	
		SG320-05	
		SG320P-5	
		SG7905	
	TI	μA7905	
LμA7908	Fairchild	MC7908	
		μA7908	
		μA79M08	
	Lambda	LMC7908	
	Motorola	MC7908	
	SiliconG	SG7908	
	TI	μA7908	
		μA79M08	
LμA7912	Fairchild	μA7912	
		μA79M12	
	Motorola	MC7912	
	National	LM320MP12	
		LM7912	
		LM79M12	
	SiliconG	SG320P-12	
		SG7912	
	TI	LM320-12	
		μA7912	
	Thomson-CSF	TDB2912	
LμA7915	Fairchild	μA7915	
	Motorola	MC7915	
	National	LM320-15	
		LM320T15	
		LM7915	
	SiliconG	SG320-15	
		SG7915	
	TI	LM320-5	
		μA7915	
	Thomson-CSF	TDB2915	
LμA7918	Motorola	MC7918	
	TI	μA7918	

Linear Technology Corp.

Manufacturer Device	Replacement Source	Device	IC Master Page
LM101	AMD	LM101	
	AD	AD101	
	Fairchild	μA101	
	Intersil	AD101	
	Motorola	LM101	
	Raytheon	LM101	
	SiliconG	SG101	
	TI	LM101	
	Thomson-CSF	SFC2101	
LM101A	National	LM101A	
	TI	LM101A	
LM107	AMD	LM107	
	AD	**AD741S**	**3351**
	Intersil	LM107	
	National	LM107	
	Raytheon	LM107	
	SiliconG	SG107	
	TI	LM107	
	Thomson-CSF	SFC2107	
LM108	AMD	LM108	
	AD	**AD108**	**3351**
	Fairchild	μA108	
		μA725	
	Intel	ISBC108	
	Intersil	ICL108	
		LM108	
	LinearTech	LM108A	
		OP-05	

(Continued)

◆ Discontinued

Bold face device numbers indicate manufacturers data is provided in the IC Master on the pages noted.

© IC MASTER 1984

Linear Technology Corp. (Cont'd)

Manufacturer Device	Replacement Source	Device	IC Master Page
LM108	MicroPwr	MP5501	
		MP5505	
		MPLM108A	
		OP-08	
	Motorola	LM108	
	National	LM108	
		LM108A	
	NEC	μPC154	
	PMI	OP-01	
		OP-05	**3566**
		OP-06	
		OP-07	**3566**
		PM108	
		PM725	
	Raytheon	**OP-05**	**3592**
		OP-07	**3592**
		RC725	
		RM725	
	Signetics	LM108	
LM108A	AMD	LM108	
	AD	**AD108**	**3351**
	Fairchild	μA108	
		μA725	
	Intel	ISBC108	
	Intersil	ICL108	
		LM108	
	LinearTech	LM108	
		OP-05	
	MicroPwr	MP5501	
		MP5505	
		MPLM108A	
		OP-08	
	Motorola	LM108	
	National	LM108	
		LM108A	
	NEC	μPC154	
	PMI	OP-01	
		OP-05	**3566**
		OP-06	
		OP-07	**3566**
		PM108	
		PM725	
	Raytheon	**OP-05**	**3592**
		OP-07	**3592**
		RC725	
		RM725	
	Signetics	LM108	
LM11	Motorola	LM11	
	National	LM11	
LM117	MCE	MCE-LM117	
	Motorola	**LM117**	**3532**
	National	LM117	
	SiliconG	SG117	
	TI	LM117	
LM118	AMD	LM118	
	National	LM118	
	TI	LM118	
LM123	**Motorola**	**LM123**	**3531**
		MC78T05	
	National	LM123	
	SiliconG	SG123	
	TI	SN55123	
LM137	MCE	MCE-LM137	
	Motorola	**LM137**	**3532**
	National	LM137	
	TI	LM137	
LM150	**Motorola**	**LM150**	**3532**
	National	LM150	
	SiliconG	SG150	
LM185	National	LM185	
LM301	AD	AD301	
	Fairchild	μA301A	
	Intersil	AD301	
	LinearTech	LM301A	
	Motorola	LM301	
	National	LM301	
		LM301A	
	NEC	μPC157	
		μPC301	
	Raytheon	LM301	
	RCA	CA301	
		LM301	
	SiliconG	SG301	
	TI	LM301	
		LM301A	
	Thomson-CSF	SFC2301	
	Toshiba	TA7506	
LM301A	AD	AD301	
	Fairchild	μA301A	
	Intersil	AD301	
	LinearTech	LM301	
	Motorola	LM301	
	National	LM301	
		LM301A	
	NEC	μPC157	
		μPC301	
	Raytheon	LM301	
	RCA	CA301	
		LM301	
	SiliconG	SG301	
	TI	LM301	
		LM301A	
	Thomson-CSF	SFC2301	
	Toshiba	TA7506	
LM307	AMD	LM307	
	AD	**AD741J**	**3351**
	Intersil	LM307	
	Motorola	LM307	
	National	LM307	
	Raytheon	LM307	
	RCA	CA307	
	SiliconG	SG307	
	TI	LM307	
	Thomson-CSF	SFC2307	
LM317	Fairchild	μA317	
	MCE	MCE-LM317	
	Motorola	**LM317**	**3532**
	National	LM317	
	SiliconG	SG317	
	TI	LM317	
	Thomson-CSF	TDB0117	
LM323	Fairchild	SH0323	
		SH323	
		μA78H05	
	Lambda	LAS1405	
		LAS1905	
	Micropac	M78H05	
	Motorola	**LM323**	**3531**
		MC78T05C	
	National	LM323	
	SiliconG	SG323	
LM337	MCE	MCE-LM337	
	National	LM337	
	TI	LM337	
	Thomson-CSF	TDB0137	
LM338	Micropac	MLM338	
	National	LM338	
LM350	Fairchild	μA78HGA	
	Lambda	LAS14U	
		LAS19U	
	Motorola	**LM350**	**3532**
	National	LM350	
	SiliconG	SG350	
	TI	LM350	
LM385	Motorola	LM385	
	National	LM385	
OP-05	AMD	LM108	
	AD	**AD108**	**3351**
	Fairchild	μA108	
		μA725	
	Intel	ISBC108	
	Intersil	ICL108	
		LM108	
	LinearTech	LM108	
		LM108A	
	MicroPwr	MP5501	
		MP5505	
		MPLM108A	
		OP-08	
	Motorola	LM108	
	National	LM108	
		LM108A	
	NEC	μPC154	
	PMI	OP-01	
		OP-05	**3566**
		OP-06	
		OP-07	**3566**
		PM108	
		PM725	
	Raytheon	**OP-05**	**3592**
		OP-07	**3592**
		RC725	
		RM725	
	Signetics	LM108	
OP-07	AD	AD-OP07	
		OP-07	
	Harris	HA-OP07	
	PMI	**OP-07**	**3566**
	Raytheon	**OP-07**	**3592**
	TI	OP-07	
OP-27	Datel	AM-427	
	MicroPwr	**MP5527**	**3529**
		OP-27	**3529**
	PMI	OP-27	
	Raytheon	OP-27	
OP-37	**MicroPwr**	**MP5537**	**3529**
		OP-37	**3529**

LSI Computer Systems

LL5000	RCA	LL5000	
	SGS	LL5000	
	Toshiba	LL5000	
LL7000	Toshiba	LL7000	
LS7231	Siemens	S576A	
LS7232	Siemens	S576B	
LS7233	Siemens	S576C	
LS7234	Siemens	S576D	

LSI logic

LC10000	**AMI**	**UA-5**	**4619**
	CalDevices	HC10000	
LC12600	**AMI**	**UA-6**	**4619**
	CalDevices	HC12600	
LC3100	**AMI**	**UA-1**	**4619**
	CalDevices	HC3100	
LC4100	**AMI**	**UA-2**	**4619**
	CalDevices	HC4100	
LC5400	**AMI**	**UA-3**	**4619**
	CalDevices	HC5400	
LC7700	**AMI**	**UA-4**	**4619**
	CalDevices	HC7700	
LCA1200	National	MCA1200	
LCA600	National	MCA600	

Master Logic Corporation

MASG-050	Si-Fab	MASG-050	
MASG-100	Si-Fab	MASG-100	
MASG-200	Si-Fab	MASG-200	
MASG-400	Si-Fab	MASG-400	
MASTERMOS	Monosil	MONOLOGIC	
ML100	Exar	XRCMA	
	Interdesign	**MCA**	**4746**
	MCE	MGC110A	
	Monosil	ML100	
	Nitron	NC5100	
ML150	Exar	XRCMB	
	Interdesign	**MCB**	**4746**
	MCE	MGC160B	
	Monosil	ML150	
	Nitron	NC5150	
ML200	Exar	XRMC	
	Interdesign	**MCC**	**4746**
	MCE	MGC210C	
	Monosil	ML200	
	Nitron	NC5200	
ML350	Exar	XRCMD	
	Interdesign	**MCD**	**4746**
	MCE	MGC350D	
	Monosil	ML350	
	Nitron	NC5350	
ML50	MCE	MGC50	
	Monosil	ML50	
	Nitron	NC5050	
ML500	MCE	MGC500	
	Monosil	ML500	
	Nitron	NC5500	
ML600	MCE	MGC600	
	Monosil	ML600	
	Nitron	NC5600	
ML7003	**SPI**	**SP7003**	**4826**
ML7005	**SPI**	**SP7005**	**4826**
ML7010	**SPI**	**SP7010**	**4826**
ML7015	SPI	SP7015	
ML7020	SPI	SP7020	

MCE Semiconductor

MCE-386	National	LM386	
MCE-4194	Exar	XR4194	
	Raytheon	RC4194	
		RM4194	
	SiliconG	SG4194	
MCE-565	AD	AD565	
	Fairchild	μA565	
MCE-566	AD	AD566	
MCE-567	**Exar**	**XR2567**	**3367**
		XR567	
	National	LM567	
	Signetics	NE567	
		SE567	
MCE-570	AD	AD570	
MCE-571	AD	AD571	
	Fairchild	μA571	
MCE-574	AD	AD574	
	HybridSys	HS574	
	MicroNet	MN574	
	MicroPwr	MP574	
MCE-6012	AMD	AM6012	
	AD	AD562	
	Burr-Brown	DAC862	
	Datel	DAC-562	
	Harris	HI562	
	MicroPwr	MP562	
	Motorola	**AD562**	**3069**
	NEC	μPC6012	
		μPC648	
	PMI	DAC-312	
		DAC312B12	
	Raytheon	DAC-6012	
		DAC6012	
	Signetics	**AM6012**	**3605**
	TeledyneP.	4068	
MCE-820	SGS	TBA820	
	TI	SN76001	
	Thomson-CSF	TBA820	
MCE-A20	Exar	XRA100	
	Interdesign	**MOA**	**4746**
		MOM	**4746**
	MCE	MCE-A20A	
MCE-A20A	Exar	XRA100	
	Interdesign	**MOA**	**4746**
		MOM	**4746**
	MCE	MCE-A20	
MCE-A20B	Exar	XRB100	
	Interdesign	**MOB**	**4746**
MCE-A20C	Exar	XRC100A	
	Interdesign	**MOC**	**4746**
MCE-A20E	Cherry	CS2000	
	Exar	XRE100	
	Interdesign	**MOE**	**4746**
MCE-A20F	Cherry	CS3000	
	Exar	XRF100	
	Interdesign	**MCF**	**4746**
		MOF	**4746**
MCE-A20G	Cherry	CS2500	
	Exar	XRG100	
	Interdesign	**MOG**	**4746**
MCE-A20H	**Interdesign**	**MOH**	**4746**
MCE-A20J	Exar	XRJ100	
	Interdesign	**MOJ**	**4746**
MCE-A20L	Cherry	CS3200	
	Interdesign	**MOL**	**4746**
MCE-A20N	**Interdesign**	**MON**	**4746**
MCE-A20P	**Interdesign**	**MOP**	**4746**
MCE-A40D	Exar	XRD100	
	Interdesign	**MOD**	**4746**
MCE-AD15C	**Exar**	**XR400**	**3386**
MCE-D15A	**Exar**	**XR300**	**3386**
MCE-D15B	**Exar**	**XR500**	**3386**
MCE-D15D	Exar	XR800	
MCE-LM10	National	LM10	
MCE-LM117	LinearTech	LM117	
	Motorola	**LM117**	**3532**
	National	LM117	
	SiliconG	SG117	
	TI	LM117	
MCE-LM137	LinearTech	LM137	
	Motorola	**LM137**	**3532**
	National	LM137	
	TI	LM137	
MCE-LM217	**Motorola**	**LM217**	**3532**
	National	LM217	
	SiliconG	SG217	
	TI	LM217	
	Thomson-CSF	TDE0117	
MCE-LM237	National	LM237	
	TI	LM237	
MCE-LM317	Fairchild	μA317	
	LinearTech	LM317	
	Motorola	**LM317**	**3532**
	National	LM317	
	SiliconG	SG317	

(Continued)

◆ Discontinued

The manufacturers report their devices can be used as direct replacements.
Performance details often differ, so compare the specifications considering your requirements.

MCE Semiconductor (Cont'd)

Manufacturer Device	Replacement Source	Device	IC Master Page
MCE-LM317	TI	LM317	
	Thomson-CSF		
		TDB0117	
MCE-LM337	LinearTech	LM337	
	National	LM337	
	TI	LM337	
	Thomson-CSF		
		TDB0137	
MCE-VFC32	AD	ADVFC32	
	Burr-Brown	**VFC32**	**2849,2853**
	MicroPwr	MPVFC32	
MGC110A	Exar	XRCMA	
	Interdesign	**MCA**	**4746**
	MasterLogic	ML100	
	Monosil	ML100	
	Nitron	NC5100	
MGC160B	Exar	XRCMB	
	Interdesign	**MCB**	**4746**
	MasterLogic	ML150	
	Monosil	ML150	
	Nitron	NC5150	
MGC210C	Exar	XRMC	
	Interdesign	**MCC**	**4746**
	MasterLogic	ML200	
	Monosil	ML200	
	Nitron	NC5200	
MGC350D	Exar	XRCMD	
	Interdesign	**MCD**	**4746**
	MasterLogic	ML350	
	Monosil	ML350	
	Nitron	NC5350	
MGC50	MasterLogic	ML50	
	Monosil	ML50	
	Nitron	NC5050	
MGC500	MasterLogic	ML500	
	Monosil	ML500	
	Nitron	NC5500	
MGC600	MasterLogic	ML600	
	Monosil	ML600	
	Nitron	NC5600	

Micrel

Manufacturer Device	Replacement Source	Device	IC Master Page
MIC1103A	**Synertek**	SY1103A	
MIC2827	**Synertek**	SY2827	
MIC2833	**Synertek**	SY2833	
MIC402	**Synertek**	SY1402	

Micro Networks

Manufacturer Device	Replacement Source	Device	IC Master Page
DAC80	AD	ADDAC80	
		ADDAC85	
	Burr-Brown	DAC80	
		DAC85	
	Datel	DAC-85	
		DAC-HZ12B	
	HybridSys	**DAC9356**	**2986**
		HSDAC80	
	MicroNet	DAC85	
	National	DAC1280	
		DAC1285	
	TeledyneP	TPDAC80	
DAC85	AD	ADDAC80	
		ADDAC85	
	Burr-Brown	DAC80	
		DAC85	
	Datel	DAC-85	
		DAC-HZ12B	
	HybridSys	**DAC9356**	**2986**
		HSDAC80	
	MicroNet	**DAC80**	**3044**
	National	DAC1280	
		DAC1285	
	TeledyneP	TPDAC80	
MN0300A	AD	HTC0300A	
	MicroNet	**MN376**	**3045**
		MN377	**3045**
	TeledyneP	4860	
MN0405	AD	HDG0405	
MN050	DDC	ADH050	
MN0605	AD	HDG0605	
MN0805	AD	HDG0805	
MN2020	HybridSys	HS2020	
MN3020	HybridSys	HS3020	
MN3349	HybridSys	DAC349	
MN346	AD	AD346	
MN370	AD	AD370	
		AD371	
	HybridSys	DAC346	
		DAC347	

(Continued)

Manufacturer Device	Replacement Source	Device	IC Master Page
MN370	HybridSys	DAC356	
	MicroNet	**MN371**	**3044**
MN371	AD	AD370	
		AD371	
	HybridSys	DAC346	
		DAC347	
		DAC356	
	MicroNet	**MN370**	**3044**
MN376	AD	HTC0300A	
	MicroNet	**MN0300A**	**3045**
		MN377	**3045**
	TeledyneP	4860	
MN377	AD	HTC0300A	
	MicroNet	**MN0300A**	**3045**
		MN376	**3045**
	TeledyneP	4860	
MN3860	AD	AD3860	
	HybridSys	HS3860	
	DDC	DAC-SL	
MN5101	**Datel**	**ADC-5101**	**2860**
	DDC	DDC5101	
MN5131	HybridSys	HS5131	
MN5150	HybridSys	HS5150	
MN5201	AD	AD5201	
MN5202	AD	AD5202	
MN5203	AD	AD5203	
MN5204	AD	AD5204	
MN5205	AD	AD5205	
MN5206	AD	AD5206	
MN5207	AD	AD5207	
MN5210	**AD**	**AD5210**	**2838**
	Datel	**ADC-5210**	**2860**
	DDC	DDC5210	
MN5211	**AD**	**AD5211**	**2838**
	Datel	**ADC-5211**	**2860**
	DDC	DDC5211	
MN5212	AD	AD5212	
	Datel	**ADC-5212**	**2860**
	DDC	DDC5212	
MN5213	AD	AD5213	
	Datel	**ADC-5213**	**2860**
MN5214	**AD**	**AD5214**	**2838**
	Datel	**ADC-5214**	**2860**
	HybridSys	MN5214	
	TeledyneP	TP5214	
MN5215	AD	AD5215	
	Datel	**ADC-5215**	**2860**
MN5216	**Datel**	**ADC-5216**	**2860**
	HybridSys	HS5216	
	DDC	DDC5216	
MN5240	AD	ADADC84	
		ADADC85	
		ADADC85S	
	Burr-Brown	ADC84	
		ADC85	
	Datel	ADC-84	
		ADC-85	
		ADC-87	
		ADC-HX12B	
		ADC-HZ12B	
		ADC-HZ12BGZ	
	HybridSys	ADC581	
		ADC581B	
		HSADC85	
		HSADC85C	**2983**
	DDC	ADH8585-1	
		DDC5240	
		DDCADC85	
		DDCADC87	
	MicroNet	MNADC84	
		MNADC85	
		MNADC87	**3043**
MN5243	DDC	AD00401	
MN5250	HybridSys	HS5250	
MN5251	HybridSys	HS5251	
MN5252	HybridSys	HS5252	
MN5253	HybridSys	HS5253	
MN574	AD	AD574	
	HybridSys	HS574	
	MCE	MCE-574	
	MicroPwr	MP574	
MN7150	Datel	HDAS-16	
		HDAS-8	
MN815	Datel	ADC815	
MN825	Datel	ADC825	
MNADC84	AD	ADADC84	
		ADADC85	
		ADADC85S	
	Burr-Brown	ADC84	
		ADC85	
	Datel	ADC-84	
		ADC-85	

(Continued)

Manufacturer Device	Replacement Source	Device	IC Master Page
MNADC84	Datel	ADC-87	
		ADC-HX12B	
		ADC-HZ12B	
		ADC-HZ12BGZ	
	HybridSys	ADC581	
		ADC581B	
		HSADC85	
		HSADC85C	**2983**
	DDC	ADH8585-1	
		DDC5240	
		DDCADC85	
		DDCADC87	
	MicroNet	MN5240	
		MNADC85	
		MNADC87	**3043**
MNADC85	AD	ADADC84	
		ADADC85	
		ADADC85S	
	Burr-Brown	ADC84	
		ADC85	
	Datel	ADC-84	
		ADC-85	
		ADC-87	
		ADC-HX12B	
		ADC-HZ12B	
		ADC-HZ12BGZ	
	HybridSys	ADC581	
		ADC581B	
		HSADC85	
		HSADC85C	**2983**
	DDC	ADH8585-1	
		DDC5240	
		DDCADC85	
		DDCADC87	
	MicroNet	MN5240	
		MNADC84	
		MNADC87	**3043**
MNADC87	AD	ADADC84	
		ADADC85	
		ADADC85S	
	Burr-Brown	ADC84	
		ADC85	
	Datel	ADC-84	
		ADC-85	
		ADC-87	
		ADC-HX12B	
		ADC-HZ12B	
		ADC-HZ12BGZ	
	HybridSys	ADC581	
		ADC581B	
		HSADC85	
		HSADC85C	**2983**
	DDC	ADH8585-1	
		DDC5240	
		DDCADC85	
		DDCADC87	
	MicroNet	MN5240	
		MNADC84	
		MNADC85	
MNDAC71	AD	ADDAC71	
	Burr-Brown	DAC71	
		DAC72	
	Datel	DAC-71	
		DAC-72	
		DAC-HP16	
MNDAC87	AD	ADDAC87	
	Burr-Brown	DAC851	
		DAC87	
	Datel	DAC-687	
		DAC-87	
	HybridSys	DAC335	
		HSDAC87	
MNDACHK	Datel	DAC-HK	

Micro Power Systems

Manufacturer Device	Replacement Source	Device	IC Master Page
◆COMP-01	National	LM106	
	TI	LM106	
◆COMP-02	National	LM106	
	TI	LM106	
DAC-01	MicroPwr	MP5520	
	PMI	**DAC-01**	**3567**
◆DAC-100	PMI	DAC-100	
MP1208	**Datel**	**DAC-612**	**2863**
	National	DAC1208	
MP1209	National	DAC1209	
MP1210	National	DAC1210	
MP1230	National	DAC1230	
MP1231	National	DAC1231	
MP1232	National	DAC1232	
MP200	AD	ADG200	
	Harris	HI200	

(Continued)

Manufacturer Device	Replacement Source	Device	IC Master Page
MP200	Intersil	IH200	
	PMI	SW-05	
	Siliconix	DG200	
MP201	AD	ADG201	
	Harris	HI201	
	National	LF11201	
		LF13201	
MP2114	AMD	AM9114	
	EMM-SESCO	2114	
	Fairchild	F2114	
	Hitachi	HM472114	
	Intel	2114	
		2114A	
	Intersil	IM2114	
	Motorola	MCM2114	
	National	MM2114	
	NEC	μPD2114	
	OKI	**MSM2114**	**4118**
	Panasonic	MN2114	
	SMOS	SRM2114	
	SSS	SCM21C14	
	Synertek	**SY2114**	**4210**
	TI	TMS4045	
	Toshiba	TMM314	
		TMM314A	
MP2326	AMD	AM92256	
	Fujitsu	MB83256	
	GI	RO9256	
	Hitachi	HN613256	
	Mostek	MK38000	
	Motorola	MCM63256	
	NCR	23256	
	NEC	μPD2/83256	
		μPD23/83256	
	SMOS	SMM2326	
	Signetics	23256	
	Synertek	SY23256	
	Toshiba	TMM23256	
MP2364	AMI	S68364	
	GI	RO9464	
	GTEMicro	G5364	
	Intersil	IM7364	
	Mitsubishi	M5L2364	
	Mostek	MK36000	
	Motorola	**MCM68364**	**4048,4054**
	National	MM5235	
	NCR	NCR2364	
	RCA	**CDM5364**	**1593**
	SMOS	SMM2364	
	SGS	M36000	
	Signetics	2664A	
	SSS	SCM23C64	
		SCM23C65	
	SMC	ROM36000	
	Synertek	**SY2364**	**4211**
	TI	**TMS4764**	**4225**
	Toshiba	TM2364	
	VTI	**VT2364**	**4250**
MP2365	Intel	2364A	
	SMOS	SMM2365	
	Toshiba	TC5364	
MP3140	Datel	DAC-HA14	
	HybridSys	HS3140	
MP370	HybridSys	DAC370	
MP377-18	**HybridSys**	**DAC377-18**	**2984**
MP5010	AD	AD589	
	Ferranti	ZN423	
	Intersil	**ICL8069**	**3521**
	National	LM113	
		LM313	
	TeledyneS	9491	
MP5071	Motorola	MC3357	
MP5078	**Motorola**	**MC3420**	**3533**
		MC3520	**3533**
MP517	AD	AD510	
		AD517	
		ADOP-07	**3351**
	Burr-Brown	3510	
	Datel	**AM-430**	**2864**
		AM-490-2	
	Fairchild	μA714	
	Harris	HA-2900	
		HA-2905	
		HA-5130	
		HA-5135	
	MicroPwr	MP5505	
		MP5507	
		OP-07	**3529**
	National	LH0044	
	NEC	μPC725	
	PMI	**OP-05**	**3566**

(Continued)

◆ Discontinued

Bold face device numbers indicate manufacturers data is provided in the IC Master on the pages noted.

Micro Power Systems (Cont'd)

Manufacturer Device	Replacement Source	Device	IC Master Page
MP517	**PMI**	**OP-07**	**3566**
	Raytheon	**OP-05**	**3592**
		OP-07	**3592**
	TeledyneP	1340	
	TI	OP-07	
MP5501	AMD	LM108	
	AD	**AD108**	**3351**
	Fairchild	μA108	
		μA725	
	Intel	ISBC108	
	Intersil	ICL108	
		LM108	
	LinearTech	LM108	
		LM108A	
		OP-05	
	MicroPwr	MP5505	
		MPLM108A	
		OP-08	
	Motorola	LM108	
	National	LM108	
		LM108A	
	NEC	μPC154	
	PMI	OP-01	
		OP-05	**3566**
		OP-06	
		OP-07	**3566**
		PM108	
		PM725	
	Raytheon	**OP-05**	**3592**
		OP-07	**3592**
		RC725	
		RM725	
	Signetics	LM108	
MP5505	AMD	LM108	
	AD	**AD108**	**3351**
	Fairchild	μA108	
		μA725	
	Intel	ISBC108	
	Intersil	ICL108	
		LM108	
	~~LinearTech~~	~~LM108~~	
		LM108A	
		OP-05	
	MicroPwr	MP5501	
		MPLM108A	
		OP-08	
	Motorola	LM108	
	National	LM108	
		LM108A	
	NEC	μPC154	
	PMI	OP-01	
		OP-05	**3566**
		OP-06	
		OP-07	**3566**
		PM108	
		PM725	
	Raytheon	**OP-05**	**3592**
		OP-07	**3592**
		RC725	
		RM725	
	Signetics	LM108	
MP5509	Exar	XR4136	
	Fairchild	μA4136	
	PMI	OP-09	
		PM4136	
	Raytheon	RC4136	
	SiliconG	SG4136C	
	TI	RC4136	
MP5510	**MicroPwr**	**OP-10**	**3529**
	PMI	OP-10	
MP5511	AMD	LM348	
	Exar	**XR4212**	**3378**
	Fairchild	μA348	
	Harris	HA-4741	
	Motorola	MC4741	
	National	LM348	
	NEC	μPC4741	
	PMI	OP-11	
	Raytheon	HA4741	
		LM348	
		RC4156	
	TI	LM348	
	Thomson-CSF		
		TDB0111	
		TDB0148	
MP5520	MicroPwr	DAC-01	
	PMI	**DAC-01**	**3567**
◆MP5524	Motorola	OP-24G	
	PMI	OP-24	
MP5527	Datel	AM-427	
	LinearTech	OP-27	
	MicroPwr	**OP-27**	**3529**
	PMI	OP-27	
	Raytheon	OP-27	
MP5531	MicroPwr	REF-02	
	PMI	REF-02	
	TeledyneS	9495	
MP5532	HybridSys	HSREF01	
	MicroPwr	REF-01	
	Motorola	**MC1404-10**	**3535**
		MC1504-10	**3535**
	PMI	REF-01	
	Raytheon	**REF-01**	**3584**
	TeledyneS	9496	
◆MP5534	Burr-Brown	OPA37	
	~~PMI~~	~~OP-34~~	
	Raytheon	OP-37	
MP5537	LinearTech	OP-37	
	MicroPwr	**OP-37**	**3529**
◆MP561	AD	AD561	
MP562	AMD	AM6012	
	AD	AD562	
	Burr-Brown	DAC862	
	Datel	DAC-562	
	Harris	HI562	
	MCE	MCE-6012	
	Motorola	**AD562**	**3069**
	NEC	μPC6012	
		μPC648	
	PMI	DAC-312	
		DAC312B12	
	Raytheon	DAC-6012	
		DAC6012	
	Signetics	**AM6012**	**3605**
	TeledyneP	4068	
◆MP571	AD	AD571	
	Fairchild	μA571	
	MCE	MCE-571	
MP574	AD	AD574	
	HybridSys	HS574	
	MCE	MCE-574	
	MicroNet	MN574	
~~MP6116~~	~~Fujitsu~~	~~MB8416~~	
	Harris	HM65162	
	Hitachi	HM6116	
	IDT	IDT6116	
	Mostek	MK6116	
	Motorola	MCM6116	
	NEC	**μPD446**	**4090**
	RCA	CDM6116	
	SMOS	SRM2016	
	Toshiba	TC5517A	
		TC5517B	
MP6117	Fujitsu	MB8418	
	Hitachi	HM6117	
	NEC	**μPD449**	**4093**
	RCA	CDM6118	
	SMOS	SRM2018	
	Toshiba	TC5518B	
MP6118	Fujitsu	MB8417	
	Harris	HM65172	
	RCA	CDM6117	
	SMOS	SRM2017	
	Toshiba	TC5516A	
MP6504	Fujitsu	MB8404	
	Harris	HM6504	
	Intersil	IM6504	
	National	NMC6504	
	RCA	CDM5104	
	SMOS	SRM6504	
	Toshiba	TC5504	
MP6514	Fujitsu	MB8414	
	Harris	HM6514	
	Hitachi	HM4334	
	Intersil	IM6514	
	Mitsubishi	M58981	
	National	NMC6514	
	NEC	μPD6514	
	OKI	**MSM5115**	**4118**
	RCA	MWS5514	
	SMOS	SRM6514	
	Toshiba	TC5514	
MP7138	**Intersil**	**ICL7106**	**2995**
	TeledyneS	TSC7106	
MP7501	AD	AD7501	
	Burr-Brown	MPC8S	
	Datel	**MX-808**	**2864**
	Harris	HI-508	
		HI508	
		HI508A	
	Intersil	IH6108	

(Continued)

Manufacturer Device	Replacement Source	Device	IC Master Page
MP7501	MicroPwr	MP7508	
	National	LF11508	
		LF13508	
	PMI	DMX-88	
		MUX-08	
		MUX-88	
	Siliconix	DG508	
		DG508A	
	TeledyneP	4554	
MP7502	AD	AD7502	
	Hitachi	HD14052	
	National	CD4052	
	SSS	SCL4052	
	Solitron	CM4052	
	Toshiba	TC4052	
MP7503	AD	AD7503	
	~~Datel~~	~~MV-806~~	~~2864~~
	Harris	HI1818A	
MP7507	AD	AD7507	
	Burr-Brown	**MPC8D**	**2850**
	Datel	**MVD-807**	**2864**
		MXD-807	**2864**
	Harris	HI507	
		HI507A	
	Intersil	IH6216	
	PMI	MUX-28	
	Siliconix	DG507	
		DG507A	
	TeledyneP	4551	
MP7508	AD	AD7501	
	Burr-Brown	MPC8S	
	Datel	**MX-808**	**2864**
	Harris	HI-508	
		HI508	
		HI508A	
	Intersil	IH6108	
	MicroPwr	MP7501	
	National	LF11508	
		LF13508	
	PMI	DMX-88	
		MUX-08	
		MUX-88	
	~~Siliconix~~	~~DG508~~	
		DG508A	
	TeledyneP	4554	
MP7509	**Burr-Brown**	**MPC4D**	**2850**
	Datel	**MXD-409**	**2864**
	Harris	HI-509	
		HI509	
		HI509A	
	Intersil	IH6208	
	National	LF11509	
		LF13509	
	PMI	MUX-24	
	Siliconix	DG509	
		DG509A	
	TeledyneP	4553	
MP7510	AD	AD7510	
	PMI	SW7510	
MP7511	AD	AD7511	
	PMI	SW7511	
MP7512	AD	AD7512	
◆MP7513	AD	ADG200	
	Harris	HI200	
	Intersil	IH200	
	MicroPwr	MP200	
	PMI	SW-05	
	Siliconix	DG200	
◆MP7516	Fairchild	F4016	
		F4066	
	Hitachi	HD14016	
		HD14066	
	Motorola	MC14016	
		MC14066	
	National	CD4016	
		CD4066	
	RCA	CD4016	
		CD4066	
	Sanyo	LC4016	
		LC4066	
	SGS	HCF4016	
		HCF4066	
	Signetics	**HEF4016**	**864**
		HEF4066	
	SSS	SCL4016	
		SCL4066	
	Solitron	CM4016	
		CM4066	
		HCF4016	
	Toshiba	TC4016	
		TC4066	
MP7520	AD	AD7520	
	Datel	DAC-HA10B	
	Intersil	AD7520	
	National	AD7520	
		DAC1020	
		DAC1021	
		DAC1022	
MP7521	AD	AD7521	
	Datel	DAC-HA12B	
	HybridSys	DAC331-12	
	Intersil	AD7521	
	National	AD7521	
		DAC1220	
		DAC1221	
		DAC1222	
MP7522	AD	AD7522	
~~MP7523~~	~~AD~~	~~AD7523~~	
	Datel	**DAC-7523**	**2863**
	Intersil	AD7523	
MP7524	AD	AD7524	
MP7528	AD	AD7528	
MP7530	AD	AD7530	
MP7531	AD	AD7531	
MP7533	AD	AD7533	
	Datel	**DAC-7533**	**2863**
	Intersil	AD7533	
	National	AD7533	
MP7541	AD	AD7541	
	Datel	**DAC-7541**	**2863**
	Harris	HI-7541	
		HI17541	
	HybridSys	HS7541	
	Intersil	AD7541	
		ICL7541	
	MicroPwr	MP7621	
	TeledyneP	TP-7541	
		TP7541	
	TeledyneS	7541	
MP7542	AD	AD7542	
MP7543	AD	AD7543	
MP7545	AD	AD7545	
MP7550	AD	AD7550	
MP7570	AD	AD7570	
MP7574	AD	AD7574	
MP7581	AD	AD7581	
MP7616	AD	AD7546	
MP7621	AD	AD7541	
	Datel	**DAC-7541**	**2863**
	Harris	HI-7541	
		HI17541	
	HybridSys	HS7541	
	Intersil	AD7541	
		ICL7541	
	MicroPwr	MP7541	
	TeledyneP	TP-7541	
		TP7541	
	TeledyneS	7541	
MP7622	AD	AD7622	
	HybridSys	HS3120	
	Siliconix	MP7622	
◆MP7623	AD	AD7546	
	MicroPwr	MP7616	
MP9377	HybridSys	DAC9377	
MP9377-16	HybridSys	DAC9377-16	
MPINA101	**Burr-Brown**	**INA101**	**2851**
MPLM108A	AMD	LM108	
	AD	**AD108**	**3351**
	Fairchild	μA108	
		μA725	
	Intel	ISBC108	
	Intersil	ICL108	
		LM108	
	LinearTech	LM108	
		LM108A	
		OP-05	
	MicroPwr	MP5501	
		MP5505	
		OP-08	
	Motorola	LM108	
	National	LM108	
		LM108A	
	NEC	μPC154	
	PMI	OP-01	
		OP-05	**3566**
		OP-06	
		OP-07	**3566**
		PM108	
		PM725	
	Raytheon	**OP-05**	**3592**
		OP-07	**3592**
		RC725	

(Continued)

◆ Discontinued

The manufacturers report their devices can be used as direct replacements.
Performance details often differ, so compare the specifications considering your requirements.

Micro Power Systems (Cont'd)

Manufacturer Device	Replacement Source	Device	IC Master Page
MPLM108A	Raytheon	RM725	
	Signetics	LM108	
MPLM208	AMD	LM208	
	AD	**AD208**	**3351**
	Fairchild	μA208	
	LinearTech	OP-05	
	MicroPwr	MP5505	
		MP5508	**3529**
	Motorola	LM208	
	National	LM208	
	PMI	**OP-05**	**3566**
		PM208	
	Raytheon	**OP-05**	**3592**
	SiliconG	SG208	
	TI	μA714	
	Thomson-CSF	SFC2208	
MPLM208A	National	LM208A	
MPLM308	AMD	LM308	
	AD	**AD308**	**3351**
	Burr-Brown	3500	
		3501	
	Fairchild	μA308	
	Intersil	AD308	
		LM308	
	MicroPwr	MP5505	
	Motorola	LM308	
	National	LM308	
	Raytheon	LM308	
	SiliconG	SG308	
	Thomson-CSF	SFC2308	
MPLM308A	National	LM308A	
MPOP03	PMI	OP-03	
MPOP04	AMD	747	
	Fairchild	μA747	
	Hitachi	HA17747	
	Motorola	MC1747	
	National	LM747	
	NEC	μPC251	
	PMI	**OP-04**	**3566**
		PM747	
	Raytheon	RC747	
		RM747	
	RCA	CA747	
	Signetics	μA747	
	SiliconG	SG747	
	TeledyneS	747	
	TI	μA747	
MPOP12	**PMI**	**OP-12**	**3566**
MPOP14	AMD	AM1458	
	Exar	XR1458	
		XR4558	
	Fairchild	μA1458	
	Harris	HA-2655	
	Hitachi	HA17458	
	Motorola	MC1458	
		MC4558C	
		RC4558	
	National	LM1458	
	NEC	μPC1458	
		μPC4558	
	PMI	PM1458	
	Raytheon	RC1458	
		RC4558	**3592**
	RCA	CA1458	
		LM1458	
		RC4558	
		SSS1458	
	Sanyo	LA6458A	
	Signetics	MC1458	
		NE4558	
	SiliconG	SG1458	
	TI	MC1458	
		RC4558	
MPOP207	PMI	OP-207	
MPOP2108	PMI	OP-2108	
MPOP227	PMI	OP-227	
MPREF05	PMI	REF-05	
MPREF10	PMI	REF-10	
MPVFC32	AD	ADVFC32	
	Burr-Brown	**VFC32**	**2849,2853**
	MCE	MCE-VFC32	
OP-08	AMD	LM108	
	AD	**AD108**	**3351**
	Fairchild	μA108	
		μA725	
	Intel	ISBC108	
	Intersil	ICL108	
		LM108	

(Continued)

Manufacturer Device	Replacement Source	Device	IC Master Page
OP-08	LinearTech	LM108	
		LM108A	
		OP-05	
	MicroPwr	MP5501	
		MP5505	
		MPLM108A	
	Motorola	LM108	
	National	LM108	
		LM108A	
	NEC	μPC154	
	PMI	OP-01	
		OP-05	**3566**
		OP-06	
		OP-07	**3566**
		PM108	
		PM725	
	Raytheon	**OP-05**	**3592**
		OP-07	**3592**
		RC725	
		RM725	
	Signetics	LM108	
OP-10	MicroPwr	MP5510	
	PMI	OP-10	
◆OP-24	Motorola	OP-24G	
	PMI	OP-24	
OP-27	Datel	AM-427	
	LinearTech	OP-27	
	MicroPwr	**MP5527**	**3529**
	PMI	OP-27	
	Raytheon	OP-27	
◆OP-34	Burr-Brown	OPA37	
	PMI	OP-34	
	Raytheon	OP-37	
OP-37	LinearTech	OP-37	
	MicroPwr	**MP5537**	**3529**
OP08	**PMI**	**OP-08**	**3566**
REF-01	HybridSys	HSREF01	
	MicroPwr	**MP5532**	**3529**
	Motorola	**MC1404-10**	**3535**
		MC1504-10	**3535**
	PMI	REF-01	
	Raytheon	**REF-01**	**3584**
	TeledyneS	9496	
REF-02	**MicroPwr**	**MP5531**	**3529**
	PMI	REF-02	
	TeledyneS	9495	

Micropac Industries

Manufacturer Device	Replacement Source	Device	IC Master Page
M78H05	Fairchild	SH0323	
		SH323	
		μA78H05	
	Lambda	LAS1405	
		LAS1905	
	LinearTech	LM323	
	Motorola	**LM323**	**3531**
		MC78T05C	
	National	LM323	
	SiliconG	SG323	
M78H12	Fairchild	μA78H12A	
	Lambda	LAS1412	
		LAS1912	
M78P05	Fairchild	μA78P05	
	Lambda	LAS3905	
	Micropac	MLAS3905	
MLAS3905	Fairchild	μA78P05	
	Lambda	LAS3905	
	Micropac	M78P05	
MLAS3912	Lambda	LAS3912	
MLAS3915	Lambda	LAS3915	
MLM138	LNT	LM138	
	National	LM138	
MLM196	National	LM196	
MLM338	LinearTech	LM338	
	National	LM338	
MLM396	National	LM396	

Mitel Semiconductor

Manufacturer Device	Replacement Source	Device	IC Master Page
M54562	Sprague	UDN-2982	
M54563	Sprague	UDN-2981	
M58757	AMD	AM2167	
	Hitachi	HM6167	
	IMS	IMS1400	
	IDT	IDT6167	
	Intel	2167	
	ITT	2167	
	Mitsubishi	M5M2167	
	NEC	**μPD2167**	**4086**
	Synertek	**SY2167**	**4210**
	TI	TMS2167	

Manufacturer Device	Replacement Source	Device	IC Master Page
M5L2764	AMD	AM2764	
	Fujitsu	MBM2764	
	Hitachi	HN482764	
	Intel	2764	
		M2764	
	Intersil	IM2764	
	Mitsubishi	M5L2764	
	Mostek	MK2764	
	National	NMC2764	
	NEC	μPD2764	
	SEEQ	5133	
	Toshiba	TMM2764	
MD4055	RCA	CD4055	
	SGS	HCF4055	
	Toshiba	TC4055	
MD4056	RCA	CD4056	
	SGS	HCF4056	
	Toshiba	TC4056	
MD4104	Fairchild	F4104	
	Motorola	MC14504	
	National	MM4104	
	RCA	CD40109	
	SGS	HCF40109	
	Signetics	HEF4104	
MD4368	Fairchild	9368	
MD4511	Fairchild	F4511	
	Hitachi	HD14511	
	MMI	4511	
	Motorola	MC14511	
	National	CD4511	
	NEC	μPD4511	
	RCA	CD4511	
	SGS	HCF4511	
	Signetics	HEF4511	
	SSS	SCL4511	
	Solitron	CM4511	
	Toshiba	TC4511	
MD54SC137	SPI	SP54SC137	
MD54SC138	SPI	SP54SC138	
MD54SC139	SPI	SP54SC139	
MD54SC238	SPI	SP54SC238	
MD54SC239	SPI	SP54SC239	
MD54SC240	SPI	SP54SC240	
MD54SC241	SPI	SP54SC241	
MD54SC244	SPI	SP54SC244	
MD54SC245	SPI	SP54SC245	
MD54SC373	SPI	SP54SC373	
MD54SC374	SPI	SP54SC374	
MD54SC540	SPI	SP54SC540	
MD54SC541	SPI	SP54SC541	
MD54SC573	SPI	SP54SC573	
MD54SC574	SPI	SP54SC574	
MD74SC137	GTEMicro	G74SC137	
	Plessey	MV74SC137	
	SPI	SP74SC137	
MD74SC138	GTEMicro	G74SC138	
	Plessey	MV74SC138	
	RCA	CDP1873	
	SPI	SP74SC138	
MD74SC139	GTEMicro	G74SC139	
	Plessey	MV74SC139	
	SPI	SP74SC139	
MD74SC234	GTEMicro	G74SC534	
MD74SC238	SPI	SP74SC238	
MD74SC239	SPI	SP74SC239	
MD74SC240	GTEMicro	G74SC240	
	Plessey	MV74SC240	
	SPI	SP74SC240	
MD74SC241	GTEMicro	G74SC241	
	Plessey	MV74SC241	
	SPI	SP74SC241	
MD74SC244	GTEMicro	G74SC244	
	Plessey	MV74SC244	
	SPI	SP74SC244	
MD74SC245	Fairchild	74LS245	
	GTEMicro	G74SC245	
	MMI	**SM74LS245**	**806**
	Motorola	SN74LS245	
	National	DM74LS245	
	Plessey	MV74SC245	
	SPI	SP74SC245	
	Signetics	74LS245	
		N81245	**876**
	TI	SN74LS245	
MD74SC373	GTEMicro	G74SC373	
	Plessey	MV74SC373	
	SPI	SP74SC373	
MD74SC374	GTEMicro	G74SC374	
	Plessey	MV74SC374	
	SPI	SP74SC374	
MD74SC533	GTEMicro	G74SC533	

Manufacturer Device	Replacement Source	Device	IC Master Page
MD74SC540	GTEMicro	G74SC540	
	SPI	SP74SC540	
MD74SC541	GTEMicro	G74SC541	
	SPI	SP74SC541	
MD74SC563	GTEMicro	G74SC563	
MD74SC564	GTEMicro	G74SC564	
MD74SC573	GTEMicro	G74SC573	
	SPI	SP74SC573	
MD74SC574	GTEMicro	G74SC574	
	SPI	SP74SC574	
MH88205	ITT	88205	
	Mitel	MH88305	
MH88305	ITT	88205	
	Mitel	MH88205	
ML8204	Cherry	CS8204	
ML8205	Cherry	CS8205	
MT3506	**AMI**	**S3506**	**3348**
MT3507	**AMI**	**S3507**	**3348**
MT4320	ITT	DF320	
	Nitron	NC2320	
	Siliconix	DF320	
MT4322	ITT	DF322	
	Nitron	NC2322	
MT5087	AMI	S2859	
	GI	AY5-9559	
	Mostek	MK5087	
	National	TP5087	
	Plessey	MV5087	
	TI	TCM5087	
MT5089	**AMI**	**S25089**	**3340**
	Mostek	MK5089	
	National	TP5089	
	Plessey	MV5089	
	TI	TCM5089	
MT5091	Mostek	MK5091	
	TI	TCM5091	
MT5092	Mostek	MK5092	
	National	TP5092	
	TI	TCM5092	
MT8804	Fairchild	F8804	
MT8860	GTEMicro	G8860	
	Plessey	MB8860	
MT8865	GTEMicro	G8865	
	Mostek	MK8865	
	Plessey	MV8865	
MT8870	GTEMicro	G8870	

Mitsubishi Electronics America, Inc.

Manufacturer Device	Replacement Source	Device	IC Master Page
M54523	Exar	XR2003	
		XR2004	
		XR2203	
	Fairchild	9667	
		MC1413	
	Motorola	**MC1413**	**3064**
		ULN2003	
	Sanyo	LB1233	
	SGS	L203	
	Signetics	NE5603	
		ULN2003	
	SiliconG	SG2003	
	Sprague	ULN-2003	
		ULQ-2003	
		ULQ-2004	
		ULS-2003	
		ULS-2004	
	TI	ULN2003	
	Toshiba	TD62003	
◆M54524	Exar	XR2001	
		XR2201	
	Fairchild	9665	
	Motorola	**MC1411**	**3064**
		ULN2001	
		XR2201	
	NEC	μPA2001	
	RIFA	PBD352301	
	Sanyo	LB1231	
	SGS	L201	
	SiliconG	SG2001	
	Sprague	ULN-2001	
		ULN-2021	
		ULQ-2002	
		ULS-2001	
	TI	ULN2001	
	Toshiba	TD62001	
◆M54525	Exar	XR2002	
		XR2202	
	Fairchild	9666	
		MC1412	
	Motorola	**MC1412**	**3064**
		ULN2002	

(Continued)

◆ Discontinued

Bold face device numbers indicate manufacturers data is provided in the IC Master on the pages noted.

Mitsubishi Electronics America, Inc. (Cont'd)

Manufacturer Device	Replacement Source	Device	IC Master Page
◆M54525	NEC	μPA2002	
	RIFA	PBD352304	
	Sanyo	LB1232	
	SGS	L202	
	Signetics	NE5602	
	Sprague	ULN-2002	
		ULQ-2003	
	TI	ULN2002	
	Toshiba	TD62002	
M54526	Exar	XR2204	
	Fairchild	9668	
	Motorola	**MC1416**	**3064**
		ULN2004	
	Sanyo	LB1234	
	SGS	L204	
	Signetics	NE5604	
		ULN2004	
	SiliconG	SG2004	
	Sprague	ULN-2004	
		ULS2004	
	TI	ULN2004	
	Toshiba	TD62004	
M58653	GI	ER1451	
M58981	Fujitsu	MB8414	
	Harris	HM6514	
	Hitachi	HM4334	
	Intersil	IM6514	
	MicroPwr	MP6514	
	National	NMC6514	
	NEC	μPD6514	
	OKI	**MSM5115**	**4118**
	RCA	MWS5514	
	SMOS	SRM6514	
	Toshiba	TC5514	
M5G1400	GI	ER1400	
	NCR	NCR1400	
	Nitron	NC1400	
M5K8725	AD	AD515	
	Burr-Brown	3528	
	Harris	HM6116	
	IDT	IDT6116	
	MicroPwr	MP6116	
	OKI	**MSM2128**	**4118**
	SMOS	SMM2016	
	Toshiba	TC5516	
◆M5L2114	AMD	AM9114	
	EMM-SESCO	2114	
	Fairchild	F2114	
	Hitachi	HM472114	
	Intel	2114	
		2114A	
	Intersil	IM2114	
	MicroPwr	MP2114	
	Motorola	MCM2114	
	National	MM2114	
	NEC	μPD2114	
	OKI	**MSM2114**	**4118**
	Panasonic	MN2114	
	SMOS	SRM2114	
	SSS	SCM21C14	
	Synertek	**SY2114**	**4210**
	TI	TMS4045	
	Toshiba	TMM314	
		TMM314A	
M5L27128	AMD	27128	
		AM27128	**3929**
	Fujitsu	MBM27128	
	Intel	27128	
	Mitsubishi	M5L27C128	
	SEEQ	5143	
◆M5L2716	AMD	AM2716	
	Fujitsu	MB2716	
	Hitachi	HN462716	
	Intel	2716	
	Mostek	MK2716	
	Motorola	MCM2716	
	National	MM2716	
	NEC	μPD2716	
	OKI	**MSM2716**	**4118**
	Panasonic	MN2716	
	SGS	M2716	
	TI	TMS2516	
M5L2732	AMD	AM2732	
	Hitachi	HN462732	
	Intel	2732	
		2732A	
		M2732	
	National	MM2732	
		NMC2732	
		(Continued)	

Manufacturer Device	Replacement Source	Device	IC Master Page
M5L2732	NEC	μPD2732	
	Toshiba	TMM2732	
		TMM324C	
	Universal	UM2732	
M5L2764	AMD	AM2764	
	Fujitsu	MBM2764	
	Hitachi	HN482764	
	Intel	2764	
		M2764	
	Intersil	IM2764	
	Mitel	M5L2764	
	Mostek	MK2764	
	National	NMC2764	
	NEC	μPD2764	
	SEEQ	5133	
	Toshiba	TMM2764	
M5L27C128	AMD	27128	
		AM27128	**3929**
	Fujitsu	MBM27128	
	Intel	27128	
	Mitsubishi	M5L27128	
	SEEQ	5143	
M5M2167	AMD	AM2167	
	Hitachi	HM6167	
	IMS	IMS1400	
	IDT	IDT6167	
	Intel	2167	
	ITT	2167	
	Mitel	M58757	
	NEC	**μPD2167**	**4086**
	Synertek	**SY2167**	**4210**
	TI	TMS2167	
M5M2168	AMD	AM2168	
		AM2169	
	Fujitsu	MB8168	
	Hitachi	HM6168	
	IMS	IMS1420	
		IMS1421	
	Intel	2168	
	Synertek	**SY2168**	**4210**
	TI	TMS2168	
		TMS2169	
M5M4256	Motorola	MCM6256	
M5M5164	Fujitsu	MB8464	
	Hitachi	HM6264	
		HM6464	
	Mitsubishi	M5M5165	
	Toshiba	TC5564	
		TC5565	
M5M5165	Fujitsu	MB8464	
	Hitachi	HM6264	
		HM6464	
	Mitsubishi	M5M5164	
	Toshiba	TC5564	
		TC5565	
ULN-2064	Sprague	ULN-2064	
	TI	SN75064	
		ULN2064	
	Toshiba	TD62064	

Monolithic Memories, Inc.

Manufacturer Device	Replacement Source	Device	IC Master Page
4511	Fairchild	F4511	
	Hitachi	HD14511	
	Mitel	MD4511	
	Motorola	MC14511	
	National	CD4511	
	NEC	μPD4511	
	RCA	CD4511	
	SGS	HCF4511	
	Signetics	HEF4511	
	SSS	SCL4511	
	Solitron	CM4511	
	Toshiba	TC4511	
5275-1	Signetics	N82S291	
		N87S290	
5300-1	**Harris**	**HM7610-2**	**3944**
	Intel	M3601	
	MMI	**53S140**	**4026**
	National	**DM54S387**	**4057**
	Signetics	**S82S126**	**532**
	TI	**TBP24SA10M**	
			542,4238
5301-1	**Harris**	**HM7611-2**	**3944**
	Intel	M3621	
	MMI	**53S141**	**4026**
	National	**DM54S287**	**4057**
	Signetics	**S82S129**	**532**
5305-1	Intel	M3602	
	MMI	**53S240**	**4026**
	National	**DM54S570**	**4057**
	Signetics	**S82S130**	**532**

Manufacturer Device	Replacement Source	Device	IC Master Page
5306-1	Intel	M3622	
	MMI	**53S241**	**4026**
	National	**DM54S571**	**4057**
	Signetics	**S82S131**	**532**
5308	Fujitsu	MB7117E-W	
	National	54S470	
5308-1	**TI**	**TBP28LA22M**	**4240**
5309	Fujitsu	MB7118E-W	
	National	54S471	
5309-1	**TI**	**TBP28L22M**	
			542,4240
5330-1	AMD	AM27LS18	
	MMI	53LS080	
		63LS080	
	National	**DM54S188**	**4057**
		DM7577	
	Signetics	**S82S23**	**532**
5331-1	AMD	AM27LS19	
		AM27S19	
	Harris	HM7603	
	MMI	**53S081**	**4026**
		6331-1	
		63S081	**4026**
	National	**DM74S288**	**4057**
		DM8578	
	Signetics	N82S123	
		S82S123	**532**
	TI	**TBP18S030**	
			542,4237
5340-1	Intel	M3604	
	National	**DM54S475**	**4057**
		DM77S295	
		DM87S295	
	Signetics	S82S140	
5341-1	Intel	M3624	
	National	**DM54S474**	**4057**
	Signetics	**S82S141**	**532**
	TI	**TBP28S46M**	
			542,543,4245
5348-1	Fujitsu	MB7123E-W	
	National	**DM54S473**	**4057**
	Signetics	S82S146	
5349-1	Fujitsu	MB7124E-W	
		MBM7124	
	National	**DM54S472**	**4057**
	Signetics	**S82S147**	**532**
	TI	DM54S472	
5352-1	Fujitsu	MB7121E-W	
	Harris	**HM7642-2**	**3948**
	Intel	M3605	
	National	**DM54S572**	**4057**
	Signetics	S82S136	
	TI	**TBP24SA41M**	**4239**
5353-1	AMD	AM27S33	
	Fairchild	93453C	
	Fujitsu	MB7122	
	Harris	HM7643	
		HM7643A	
	MMI	6353-1	
	Motorola	**MCM7643**	**4047**
	National	**DM74S573**	**4057**
	Signetics	N72HS137	
		N82S137	**4172**
		S82S195	**4182**
	TI	**TBP24S41**	
			542,4239
5380-1	Fujitsu	MB7131E-W	
	National	**DM77S180**	**4057**
	Signetics	S82S180	
	TI	**TBP28SA86M**	**4247**
5381-1	**AMD**	**AM27S181M**	**3905**
	Fairchild	93451M	
	Fujitsu	MB7132-W	
		MB7132E-W	
	Harris	**HM7681-2**	**3949**
	National	**DM77S181**	**4057**
	Raytheon	29631AM	
	Signetics	S82HS181	
		S82S181	**532**
	TI	TBP28S86M	
5388	Fujitsu	MB7127E-W	
	MMI	5388-1	
	National	**DM77S184**	**4057**
5388-1	Fujitsu	MB7127E-W	
	MMI	5388	
	National	**DM77S184**	**4057**
5389	Fujitsu	MB7128E-W	
	Harris	**HM7685-2**	**3950**
	MMI	5389-1	
	National	**DM77S185**	**4057**
	Raytheon	29651AM	
	Signetics	S82HS185	
		(Continued)	

Manufacturer Device	Replacement Source	Device	IC Master Page
5389	**Signetics**	**S82S185**	**532**
	TI	SN54S454	
		TBP24S81M	
			542,4239
5389-1	Fujitsu	MB7128E-W	
	Harris	**HM7685-2**	**3950**
	MMI	5389	
	National	**DM77S185**	**4057**
	Raytheon	29651AM	
	Signetics	S82HS185	
		S82S185	**532**
	TI	SN54S454	
		TBP24S81M	
			542,4239
53DA1643	**AMD**	**AM27S85**	**3902**
	MMI	63DA1643	
53DA441	**AMD**	**AM27S65**	**3902**
	MMI	63DA441	
53DA841	**AMD**	**AM27S75**	**3902**
	MMI	63DA841	
53LS080	AMD	AM27LS18	
	MMI	5330-1	
		63LS080	
	National	**DM54S188**	**4057**
		DM7577	
	Signetics	**S82S23**	**532**
53S081	AMD	AM27LS19	
		AM27S19	
	Harris	HM7603	
	MMI	5331-1	
		6331-1	
		63S081	**4026**
	National	**DM74S288**	**4057**
		DM8578	
	Signetics	N82S123	
		S82S123	**532**
	TI	**TBP18S030**	
			542,4237
53S140	**Harris**	**HM7610-2**	**3944**
	Intel	M3601	
	MMI	5300-1	
	National	**DM54S387**	**4057**
	Signetics	**S82S126**	**532**
	TI	**TBP24SA10M**	
			542,4238
53S141	**Harris**	**HM7611-2**	**3944**
	Intel	M3621	
	MMI	5301-1	
	National	**DM54S287**	**4057**
	Signetics	**S82S129**	**532**
53S1681	**National**	**DM77S191**	**4057**
	Signetics	**S82S191**	**532**
53S240	Intel	M3602	
	MMI	5305-1	
	National	**DM54S570**	**4057**
	Signetics	**S82S130**	**532**
53S241	Intel	M3622	
	MMI	5306-1	
	National	**DM54S571**	**4057**
	Signetics	**S82S131**	**532**
53S3281	**AMD**	**AM27S43**	**3908**
	Fujitsu	MB7142	
	Harris	76321	
		HM76321	
	Intel	3632	
	MMI	**63S3281**	**4026**
	National	87S321	
		DM87S321	**4057**
	Raytheon	**29671**	**4131**
	Signetics	N82S321	
53S441	AMD	AM27S33M	
		AM27S41	**3907**
	Fairchild	93453M	
	Fujitsu	MB7122E-W	
		MB7152E-W	
	Harris	**HM7643-2**	**3948**
	Motorola	MCM7643M	
	National	**DM54S573**	**4057**
		DM54S573A	**4057**
	Signetics	S82HS137	
		S82S137	**532**
		S82S195	**4182**
	TI	**TBP24S41M**	
			542,4239
54LS299	AMD	SN54LS299	
	Fairchild	54LS299	
	Motorola	SN54LS299	
	TI	**SN54LS299**	**1016**
54LS533	AMD	AM25LS533M	
54LS534	Fairchild	54LS534	
54LS645-1	Signetics	SN54LS645-1	
	TI	SN54LS645-1	

◆ Discontinued

The manufacturers report their devices can be used as direct replacements.
Performance details often differ, so compare the specifications considering your requirements.

Monolithic Memories, Inc. (Cont'd)

Manufacturer Device	Replacement Source	Device	IC Master Page
54S283	TI	**SN54S283**	**1011**
54S532	AMD	AM25S374M	
54S533	AMD	AM25S533M	
54S534	Signetics	54S534	
54S536	AMD	AM25S534M	
54S558	AMD	AM25S558M	
54S730	AMD	AM2965M	
54S734	AMD	AM2966M	
57401	National	DM77S401	
6300-1	AMD	AM27S20	
	Fairchild	93417	
	Harris	HM7610	
	MMI	**63S140**	**4026**
	National	**DM74S387**	**4057**
	Signetics	N82S126	
	TI	**TBP24SA10**	**542,4238**
6301-1	AMD	AM27S11	
		AM27S21	
	Harris	HM7611	
	Intersil	IM5623	
	MMI	**63S141**	**4026**
	National	**DM74S287**	**4057**
	Signetics	N82S129	
	TI	**TBP24S10**	**542,4238**
6305-1	AMD	AM27S12	
	Fairchild	93436	
	Harris	HM7620	
	MMI	**63S240**	**4026**
	National	**DM74S570**	**4057**
	Signetics	N82S130	
6306-1	AMD	AM27S13	
	Fairchild	93446	
	Harris	HM7621	
	Intel	3622	
	MMI	**63S241**	**4026**
	Motorola	**MCM7621**	**4047**
	National	**DM74S571**	**4057**
	Raytheon	**29611**	**4131**
	Signetics	N82S131	
	TI	SN74S571	
6308	Fujitsu	MB7117	
	National	74S470	
	TI	TBP18SA2Z	
6308-1	**TI**	**TBP28LA22**	**4240**
6309	Fujitsu	MB7118	
	National	74S471	
	TI	TBP18S2Z	
6309-1	**TI**	**TBP28L22**	**542,4240**
6330-1	AMD	AM27S18	
	Harris	HM7602	
	MMI	**63S080**	**4026**
	National	**DM74S188**	**4057**
		DM7588	
		DM8577	
	Signetics	N82S23	
	TI	TBP18SA030	
		TBPSA030M	
6331-1	AMD	AM27LS19	
		AM27S19	
	Harris	HM7603	
	MMI	5331-1	
		53S081	**4026**
		63S081	**4026**
	National	**DM74S288**	**4057**
		DM8578	
	Signetics	N82S123	
		S82S123	**532**
	TI	**TBP18S030**	**542,4237**
6340-1	AMD	AM27S30	
	Fairchild	93438	
	Harris	HM7640	
	National	**DM74S475**	**4057**
		DM77S475	
		DM87S475	
	Signetics	N82S140	
	TI	**TBP28SA46**	**4245**
6341-1	AMD	AM27S31	
	Fairchild	93448	
	Fujitsu	MB7126	
	Harris	HM7641	
	Motorola	**MCM7641**	**4047**
	National	**DM74S474**	**4057**
	Signetics	N82S141	
	TI	**TBP28S46**	**542,543,4245**
6348-1	AMD	AM27S28	
	Fujitsu	MB7123	
	National	**DM74S473**	**4057**
	Signetics	N82S146	
	TI	**TBP28SA42**	**4245**
6349-1	AMD	AM27S29	
	Fujitsu	MB7124	
	Harris	HM7649	
	Motorola	**MCM7649**	**4047**
	National	**DM74S472**	**4057**
	Raytheon	**29621**	**4131**
	Signetics	N82S147	
	TI	**TBP28S42**	**542,4244**
		TBP28S42M	**542,4244**
6352-1	AMD	AM27S32	
	Fairchild	93452	
	Fujitsu	MB7121	
	Harris	HM7642	
	Hitachi	HN25044	
	Motorola	MCM7642	
	National	**DM74S572**	**4057**
	NEC	μPB406	
	Signetics	N82S136	
	TI	**TBP24SA41**	**4239**
6353-1	AMD	AM27S33	
	Fairchild	93453C	
	Fujitsu	MB7122	
	Harris	HM7643	
		HM7643A	
	MMI	5353-1	
	Motorola	**MCM7643**	**4047**
	National	**DM74S573**	**4057**
	Signetics	N72HS137	
		N82S137	**4172**
		S82S195	**4182**
	TI	**TBP24S41**	**542,4239**
6380-1	AMD	AM27S180	
		AM27S280	
	Fairchild	93450	
		93Z450	
	Fujitsu	MB7131	
	Hitachi	HN25088	
	Intel	3608	
	National	**DM87S180**	**4057**
		DM87S229	
	NEC	μPB408	
	Signetics	N82S180	
	TI	TBP28SA86	
6381-1	AMD	AM27PS181	
		AM27S181	
		AM27S281	
	Fairchild	93Z451	
		F93451	
	Fujitsu	MB7132	
	Harris	HM7681	
	Hitachi	HN25089	
	Intel	3628	
		3628A	
		3628B	
	Motorola	**MCM7681**	**4047**
	National	**DM87S181**	**4057**
		DM87S228	
	NEC	μPB417	
	Raytheon	29631	
		29631A	**4131**
		29633	
	Signetics	825181	
		N82HS181	
		N82S181	
	Supertex	SM82S181	
	TI	TBP28S86	
6388	AMD	AM27S184	
	Fujitsu	MB7127	
	Harris	HM7684	
	Hitachi	HM25045	
	MMI	6388-1	
	National	**DM87S184**	**4057**
	Signetics	N82S184	
	TI	**TBP24SA81**	**4240**
6388-1	AMD	AM27S184	
	Fujitsu	MB7127	
	Harris	HM7684	
	Hitachi	HM25045	
	MMI	6388	
	National	**DM87S184**	**4057**
	Signetics	N82S184	
	TI	**TBP24SA81**	**4240**
6389	AMD	AM27S185	
	Fujitsu	MB7128	

(Continued)

Manufacturer Device	Replacement Source	Device	IC Master Page
6389	Harris	HM7685	
	Hitachi	HN25085	
	MMI	6389-1	
		63S841	**4026**
	Motorola	**MCM7685**	**4047**
	National	**DM87S185**	**4057**
	Raytheon	29651	
		29651A	**4131**
	Signetics	N82HS185	
		N82S185	
	TI	**TBP24S81**	**542,4239**
6389-1	AMD	AM27S185	
	Fujitsu	MB7128	
	Harris	HM7685	
	Hitachi	HN25085	
	MMI	6389	
		63S841	**4026**
	Motorola	**MCM7685**	**4047**
	National	**DM87S185**	**4057**
	Raytheon	29651	
		29651A	**4131**
	Signetics	N82HS185	
		N82S185	
	TI	**TBP24S81**	**542,4239**
63DA1643	**AMD**	**AM27S85**	**3902**
	MMI	53DA1643	
63DA441	**AMD**	**AM27S65**	**3902**
	MMI	53DA441	
63DA841	**AMD**	**AM27S75**	**3902**
	MMI	53DA841	
63LS080	AMD	AM27LS18	
	MMI	5330-1	
		53LS080	
	National	**DM54S188**	**4057**
		DM7577	
	Signetics	**S82S23**	**532**
63S080	AMD	AM27S18	
	Harris	HM7602	
	MMI	6330-1	
	National	**DM74S188**	**4057**
		DM7588	
		DM8577	
	Signetics	N82S23	
	TI	TBP18SA030	
		TBPSA030M	
63S081	AMD	AM27LS19	
		AM27S19	
	Harris	HM7603	
	MMI	5331-1	
		53S081	**4026**
		6331-1	
	National	**DM74S288**	**4057**
		DM8578	
	Signetics	N82S123	
		S82S123	**532**
	TI	**TBP18S030**	**542,4237**
63S140	AMD	AM27S20	
	Fairchild	93417	
	Harris	HM7610	
	MMI	6300-1	
	National	**DM74S387**	**4057**
	Signetics	N82S126	
	TI	**TBP24SA10**	**542,4238**
63S141	AMD	AM27S11	
		AM27S21	
	Harris	HM7611	
	Intersil	IM5623	
	MMI	6301-1	
	National	**DM74S287**	**4057**
	Signetics	N82S129	
	TI	**TBP24S10**	**542,4238**
63S1681	AMD	AM27PS191	
		AM27S191	
	Fairchild	93511	
		93Z511	
	Fujitsu	MB7138	
		MB7138E-W	
	Harris	HM76161	
	Hitachi	HN25169	
	Motorola	**MCM76161**	**4047**
	National	**DM87S191**	**4057**
	NEC	μPB429	
	Raytheon	**29681**	**4131**
		29681A	**4131**
	Signetics	N82S191	
	TI	**TBP28S166**	**4247**
63S240	AMD	AM27S12	
	Fairchild	93436	
	Harris	HM7620	
	MMI	6305-1	
	National	**DM74S570**	**4057**
	Signetics	N82S130	
63S241	AMD	AM27S13	
	Fairchild	93446	
	Harris	HM7621	
	Intel	3622	
	MMI	6306-1	
	Motorola	**MCM7621**	**4047**
	National	**DM74S571**	**4057**
	Raytheon	**29611**	**4131**
	Signetics	N82S131	
	TI	SN74S571	
63S3281	**AMD**	**AM27S43**	**3908**
	Fujitsu	MB7142	
	Harris	76321	
		HM76321	
	Intel	3632	
	MMI	**53S3281**	**4026**
	National	87S321	
		DM87S321	**4057**
	Raytheon	**29671**	**4131**
	Signetics	N82S321	
63S441	AMD	AM27PS185	
	Fujitsu	MB7134	
		MB7152	
	Harris	HM76165	
	Motorola	**MCM76165**	**4047**
	NEC	μPB426	
	Raytheon	29653	
	Signetics	N82HS195	
		N82S195	**4182**
63S841	AMD	AM27S185	
	Fujitsu	MB7128	
	Harris	HM7685	
	Hitachi	HN25085	
	MMI	6389	
		6389-1	
	Motorola	**MCM7685**	**4047**
	National	**DM87S185**	**4057**
	Raytheon	29651	
		29651A	**4131**
	Signetics	N82HS185	
		N82S185	
	TI	**TBP24S81**	**542,4239**
67401	AMD	AM3341	
	Fairchild	3341	
	National	87S401	
67558	MMI	74S558	
74LS533	**AMD**	**AM25LS533**	**1427**
74LS645-1	Signetics	SN74LS645-1	
	TI	**SN74LS645-1**	**1074**
74S408	**National**	**DP8408**	**1514**
74S409	**National**	**DP8409**	**1514**
74S532	AMD	AM24S374	
74S533	**AMD**	**AM25S533**	**1427**
74S534	AMD	AM74S534	
	Signetics	74S534	
74S535	AMD	AM25S535	
74S536	**AMD**	**AM25S534**	**1427**
74S557	Fairchild	74F557	
74S558	**AMD**	**AM25S558**	**701**
	Fairchild	74F558	
74S730	AMD	AM2965	
74S734	AMD	AM2966	
C-HAL16L8C	**MMI**	**HAL16L8C**	**4776,4784**
	SPI	**SP816L8**	**4826**
	SI-Fab	**HCT16L8**	**4827**
	Zytrex	ZX-CAL16L8	
C-HAL16R4C	**MMI**	**HAL16R4C**	**4776,4784**
	SPI	**SP816R4**	**4826**
	SI-Fab	**HCT16R4**	**4827**
	Zytrex	ZX-CAL16R4	
C-HAL16R6C	**MMI**	**HAL16R6C**	**4776,4784**
	SPI	**SP816R6**	**4826**
	SI-Fab	**HCT16R6**	**4827**
	Zytrex	ZX-CAL16R6	
C-HAL16R8C	ZX-CAL16R8		
	MMI	**HAL16R8C**	**4776,4784**
	SPI	**SP816R8**	**4826**
HAL-16H2C	**SPI**	**SP816H2**	**4826**
	SI-Fab	**HCT16H2**	**4827**

◆ Discontinued

Bold face device numbers indicate manufacturers data is provided in the IC Master on the pages noted.

© IC MASTER 1984

Monolithic Memories, Inc. (Cont'd)

Manufacturer Device	Replacement Source	Device	IC Master Page
HAL10H8C	SPI	SP810H8	4826
	Si-Fab	HCT10H8	4827
	Zytrex	ZX-CAL10H8	
HAL10L8C	SPI	SP810L8	4826
	Si-Fab	HCT10L8	4827
	Zytrex	ZX-CAL10L8	
HAL12H6C	SPI	SP812H6	4826
	Si-Fab	HCT12H6	
	Zytrex	ZX-CAL12H6C	
HAL12L10	Si-Fab	HCT12L10	4827
HAL12L6C	SPI	SP812L6	4826
	Si-Fab	HCT12L6	
	Zytrex	ZX-CAL12L6	
HAL14H4C	SPI	SP814H4	4826
	Si-Fab	HCT14H4	4827
	Zytrex	ZX-CAL-14H4	
HAL14L4C	SPI	SP814L4	4826
	Si-Fab	HCT14L4	4827
	Zytrex	ZX-CAL14L4	
HAL14L8	Si-Fab	HCT14L8	4827
HAL16A4	Si-Fab	HCT16A4	4827
HAL16C1	SPI	SP816C1	4826
	Si-Fab	HCT16C1	4827
HAL16L2C	SPI	SP816L2	4826
	Si-Fab	HCT16L2	4827
HAL16L6	Si-Fab	HCT16L6	4827
HAL16L8C	MMI	C-HAL16L8C	
	SPI	SP816L8	4826
	Si-Fab	HCT16L8	4827
	Zytrex	ZX-CAL16L8	
HAL16R4C	MMI	C-HAL16R4C	
	SPI	SP816R4	4826
	Si-Fab	HCT16R4	4827
	Zytrex	ZX-CAL16R4	
HAL16R6C	MMI	C-HAL16R6C	
	SPI	SP816R6	4826
	Si-Fab	HCT16R6	4827
	Zytrex	ZX-CAL16R6	
HAL16R8C	ZX-CAL16R8		
	MMI	C-HAL16R8C	
	SPI	SP816R8	4826
HAL16X4	Si-Fab	HCT16X4	4827
HAL18L4	Si-Fab	HCT18L4	4827
HAL20C1	HCT20C1		
HAL20L10	Si-Fab	HCT20L10	4827
HAL20L2	Si-Fab	HCT20L2	4827
HAL20X10	Si-Fab	HCT20X10	
HAL20X4	Si-Fab	HCT20X4	
HAL20X8	Si-Fab	HCT20X8	
PAL10H8	National	DMPAL10H8	
PAL10L8	National	DMPAL10L8	
PAL12H10	National	DMPAL12H10	
PAL12H6	National	DMPAL12H6	
PAL12L10	AMD	AMPAL22V10	4600
	National	DMPAL12L10	
PAL12L6	National	DMPAL12L6	
PAL14H4	National	DMPAL14H4	
PAL14H8	National	DMPAL14H8	
PAL14L4	National	DMPAL14L4	
PAL14L8	AMD	AMPAL22V10	4600
	National	DMPAL14L8	
PAL16A4	National	DMPAL16A4	
PAL16C1	National	DMPAL16C1	
PAL16H2	National	DMPAL16H2	
PAL16H6	National	DMPAL16H6	
PAL16L2	National	DMPAL16L2	
PAL16X4	National	DMPAL16X4	
PAL18H4	National	DMPAL18H4	
PAL18L14	National	DMPAL18L4	
PAL20C1	AMD	AMPAL22V10	4600
	National	DMPAL20C1	
PAL20H2	National	DMPAL20H2	
PAL20L10	National	DMPAL20L10	
PAL20L2	AMD	AMPAL22V10	4600
	National	DMPAL20L2	
PAL20X10	AMD	AMPAL22V10	4600
	National	DMPAL20X10	
PAL20X4	AMD	AMPAL22V10	4600
	National	DMPAL20X4	
PAL20X8	AMD	AMPAL22V10	4600
	National	DMPAL20X8	
PAL26L6	AMD	AMPAL22V10	4600
	National	DMPAL26L6	
SN54LS240	Fairchild	54LS240	
	Motorola	SN54LS240	
	TI	SN54LS240	
SN54LS241	Fairchild	54LS241	
	Motorola	SN54LS241	
	TI	SN54LS241	
SN54LS244	Fairchild	54LS244	
	Motorola	SN54LS244	
	TI	SN54LS244	
SN54LS245	Fairchild	54LS245	
	Motorola	SN54LS245	
	National	DM54LS245	
	Signetics	54LS245	530
	TI	SN54LS245	
SN54LS273	AMD	AM25LS273M	
	Fairchild	54LS273	
	Motorola	SN54LS273	
	Signetics	54LS273	530
	TI	SN54LS273	1007
SN54LS373	Motorola	SN54LS373	
	Signetics	54LS373	530
	TI	SN54LS373	1025
~~SN54LS374~~	~~Motorola~~	~~SN54LS374~~	
	National	DM54LS374	
	TI	SN54LS374	1026
SN54LS377	AMD	AM25LS377M	
	Fairchild	54LS377	
	Motorola	SN54LS377	
	Signetics	54LS377	530
	TI	SN54LS377	1027
SN54LS645	Motorola	SN54LS645	
	TI	SN54LS645	1074
SN54S182	Fairchild	54S182	
		93S42	
	TI	SN54S182	986
SN54S241	AMD	SN54S241	
	TI	SN54S241	
SN54S244	AMD	SN54S244	
	TI	SN54S244	
SN54S373	TI	SN54S373	1025
SN54S374	TI	SN54S374	1026
SN54S381	TI	SN54S381	1028
SN74LS240	Fairchild	74LS240	
	Hitachi	HD74LS240	
	Motorola	SN74LS240	
	Signetics	74LS240	
	TI	SN74LS240	
SN74LS241	Fairchild	74LS241	
	Hitachi	HD74LS241	
	Motorola	SN74LS241	
	Signetics	74LS241	
	TI	SN74LS241	
SN74LS244	Fairchild	74LS244	
	Hitachi	HD74LS244	
	Motorola	SN74LS244	
	Signetics	74LS244	
	TI	SN74LS244	
SN74LS245	Fairchild	74LS245	
	GTEMicro	G74SC245	
	Mitel	MD74SC245	
	Motorola	SN74LS245	
	National	DM74LS245	
	Plessey	MV74SC245	
	SPI	SP74SC245	
	Signetics	74LS245	
		N8T245	876
	TI	SN74LS245	
SN74LS273	AMD	AM25LS273	1427
	Fairchild	74LS273	
	Motorola	SN74LS273	
	SGS	T74LS273	
	Signetics	74LS273	
	TI	SN74LS273	1007
SN74LS373	Fairchild	74LS373	
	Motorola	SN74LS373	
	SGS	T74LS373	
	Signetics	74LS373	
	TI	SN74LS373	1025
SN74LS374	Fairchild	74LS374	
	Motorola	SN74LS374	
	National	DM74LS374	
	SGS	T74LS374	
	Signetics	74LS374	
	TI	SN74LS374	1026
SN74LS377	AMD	AM25LS377	1427
	Fairchild	74LS377	
	Motorola	SN74LS377	
	SGS	T74LS377	
	Signetics	74LS377	
	TI	SN74LS377	1027
SN74LS534	AMD	AM74LS534	
		SN74LS534	
	Fairchild	74LS534	
SN74LS645	Motorola	SN74LS645	
	Signetics	74LS645	
	TI	SN74LS645	1074
SN74S182	Fairchild	74S182	
	Hitachi	HD74S182	
		(Continued)	
SN74S182	National	DM74S182	
	Signetics	74S182	
	TI	SN74S182	986
SN74S240	AMD	SN74S240	
	Signetics	74S240	
	TI	SN74S240	
SN74S241	AMD	SN74S241	
	Signetics	74S241	
	TI	SN74S241	
SN74S244	TI	SN74S244	
SN74S373	Signetics	74S373	
	TI	SN74S373	1025
SN74S374	Signetics	74S374	
	TI	SN74S374	1026
SNS240	AMD	SN54S240	
	TI	SN54S240	

Monosil

Manufacturer Device	Replacement Source	Device	IC Master Page
ML100	Exar	XRCMA	
	Interdesign	MCA	4746
	MasterLogic	ML100	
	MCE	MGC110A	
	Nitron	NC5100	
ML150	Exar	XRCMB	
	Interdesign	MCB	4746
	MasterLogic	ML150	
	MCE	MGC160B	
	Nitron	NC5150	
ML200	Exar	XRMC	
	Interdesign	MCC	4746
	MasterLogic	ML200	
	MCE	MGC210C	
	Nitron	NC5200	
ML350	Exar	XRCMD	
	Interdesign	MCD	4746
	MasterLogic	ML350	
	MCE	MGC350D	
	Nitron	NC5350	
ML50	MasterLogic	ML50	
	MCE	MGC50	
	Nitron	NC5050	
ML500	MasterLogic	ML500	
	MCE	MGC500	
	Nitron	NC5500	
ML600	MasterLogic	ML600	
	MCE	MGC600	
	Nitron	NC5600	
MONOLOGIC	MasterLogic	MASTERMOS	
Master MOS	IntlMicCir	MASTER MOS	

Mostek

Manufacturer Device	Replacement Source	Device	IC Master Page
MK0808	National	ADC0808	
	TI	ADC0808	
MK1002	AMD	AM1002	
MK2716	AMD	AM2716	
	Fujitsu	MB2716	
	Hitachi	HN462716	
	Intel	2716	
	Motorola	MCM2716	
	National	MM2716	
	NEC	μPD2716	
	OKI	MSM2716	4118
	Panasonic	MN2716	
	SGS	M2716	
	TI	TMS2516	
MK2764	AMD	AM2764	
	Fujitsu	MBM2764	
	Hitachi	HN482764	
	Intel	2764	
		M2764	
	Intersil	IM2764	
	Mitel	M5L2764	
	Mitsubishi	M5L2764	
	National	NMC2764	
	NEC	μPD2764	
	SEEQ	5133	
	Toshiba	TMM2764	
MK34000	AMD	AM9218	
	Fairchild	3516	
		68316	
		F3516	
		F35316	
		F68316	1464
	GI	R03-9316	
	GTEMicro	2316	
	Intel	2316	
	Motorola	MCM68316	
		MCM68A316	
		MM2316	
	National	MM52116	
		(Continued)	
MK34000	National	MM5258	
	NCR	2316	
		NCR2316	
	NEC	μPD2316	
	OKI	MSM2916	4118
	Rockwell	R2316	
	SGS	M2316	
	TI	SBP8316	
	Toshiba	TMM331A	
		TMM334	
MK36000	AMI	S68364	
	GI	R09464	
	GTEMicro	G5364	
	Intersil	IM7364	
	MicroPwr	MP2364	
	Mitsubishi	M5L2364	
	~~Motorola~~	~~MCM68364~~	
			4048,4054
	National	MM5235	
	NCR	NCR2364	
	RCA	CDM5364	1593
	SMOS	SMM2364	
	SGS	M36000	
	Signetics	2664A	
	SSS	SCM23C64	
		SCM23C65	
	SMC	ROM36000	
	Synertek	SY2364	4211
	TI	TMS4764	4225
	Toshiba	TM2364	
	VTI	VT2364	4250
MK36000-4	AMD	AM92640	
	AMI	S688364	3933
	Fairchild	F3564-25	1465
	GTEMicro	G5364	
	Motorola	MCM67365-25	
	NEC	μPD2/8364-20	
		μPD23/8364-20	
	Signetics	2064-20	
	Synertek	SY2364-2	
MK36000-5	AMD	AM9264	
	AMI	S4264	
		S68A364	3933
	GTEMicro	2364-3	
	Hitachi	HN48364	
	Motorola	MCM68365	
		MCM68366	
	National	MM52164	
	NCR	2364	
	NEC	UPD2/8364-30	
		μPD23/8364-30	
	OKI	MSM2965	
	Signetics	2664A-30	
	Synertek	SY2364-3	4211
	Toshiba	TMM2364	
	Weitek	SC8164	
MK37000	AMD	AM9265	
	GI	R09864	
	GTEMicro	G5365	
	Hitachi	HN61364	
	RCA	CDM5365	
	Signetics	2364-20	4196
	Synertek	SY2365	4211
	Toshiba	TMM2365	
	VTI	VT2365	4251
MK38000	AMD	AM92256	
	Fujitsu	MB83256	
	GI	R09256	
	Hitachi	HN613256	
	MicroPwr	MP2326	
	Motorola	MCM63256	
	NCR	23256	
	NEC	μPD2/83256	
		μPD23/83256	
	SMOS	SMM2326	
	Signetics	23256	
	Synertek	SY23256	
	Toshiba	TMM23256	
MK3850	Fairchild	3850	
MK3851	Fairchild	3851	
MK3852	Fairchild	3852	
MK3853	Fairchild	3853	
MK3854	Fairchild	3854	
MK3861	Fairchild	3861	
MK3870	Fairchild	3870	
	SGS	M3870	
	SMC	MPU3870	
	Telefunken	U3870	
MK3871	AD	AD741	3351
	Fairchild	3871	
		μA741	
	Hitachi	HA17741	
		(Continued)	

◆ Discontinued

The manufacturers report their devices can be used as direct replacements.
Performance details often differ, so compare the specifications considering your requirements.

Mostek (Cont'd)

Manufacturer Device	Replacement Source	Device	IC Master Page
MK3871	Intersil	AD741	
		ICL741	
	MicroPwr	MP5501	
		MP5502	**3529**
		OP-02	**3529**
	Motorola	LM741	
		MC1741	
	National	LM741	
	NEC	μPC151	
		μPC741	
	PMI	OP-01	
		OP-02	**3566**
		PM741	
		SSS741	
	Raytheon	RC741	
		RM741	
	RCA	CA3056	
		CA741	
	Signetics	μA741	
	SiliconG	SG300	
		SG741	
	TI	μA741	
	Thomson-CSF		
		SFC2741	
	Toshiba	TA7504	
MK3880	NEC	μPD780	
	SGS	Z80-CPU	
	Zilog	**Z80**	**1738**
		Z80-CPU	
MK3881	SGS	Z80-PI	
	Zilog	**Z80-PIO**	**1738**
MK3882	SGS	Z80-CTC	
	Zilog	**Z80-CTC**	**1738**
MK3883	SGS	Z80-DMA	
	Zilog	**Z80-DMA**	**1738**
MK3884	Mostek	MK3885	
		MK3887	
	SGS	Z80-SIO	
	Zilog	**Z80-SIO**	**1738**
MK3885	Mostek	MK3884	
		MK3887	
	SGS	Z80-SIO	
	Zilog	**Z80-SIO**	**1738**
MK3887	Mostek	MK3884	
		MK3885	
	SGS	Z80-SIO	
	Zilog	**Z80-SIO**	**1738**
MK4027	Fairchild	M4027	
	SGS	M4027	
MK4104	EMM-SESCO	4044	
	Intel	2141	
		2141A	
	Intersil	IM7141	
	Motorola	MCM6641	
	National	MM2141	
	NEC	μPD4104	
	TI	TMS4044	
	Zilog	Z6104	
MK4116	AMD	AM9016	
	Fairchild	F4116	
	Hitachi	HM4716	
	Intel	2118	
	Intersil	IM7116	
	ITT	ITT4116	
	Motorola	MCM4116	
	National	MM5290	
	NEC	**μPD416**	**4073**
	Panasonic	MN4116	
	SGS	M4116	
	Siemens	HYB4116	
	Signetics	2690	
	TI	TMS4116	
MK4118A	Mostek	MK4801A	
	Rockwell	R8118	
MK4516	Hitachi	HM4816	
		HM4816A	
	Intel	2118	
	Intersil	IM7118	
	National	NMC5295	
	NEC	μPD2118	
	TI	TMS4516	
MK4801A	Mostek	MK4118A	
	Rockwell	R8118	
MK50240	AMI	S50240	
MK50241	AMI	S50241	
MK50242	AMI	S50242	
MK50809	National	ADC0809	
	TI	ADC0809	
MK50816	Datel	DAS-952	
	National	ADC0816	
	TI	ADC0816	
MK50817	National	ADC0817	
MK5087	AMI	S2859	
	GI	AY5-9559	
	Mitel	MT5087	
	National	TP5087	
	Plessey	MV5087	
	TI	TCM5087	
MK5089	**AMI**	**S25089**	**3340**
	Mitel	MT5089	
	National	TP5089	
	Plessey	MV5089	
	TI	TCM5089	
MK5091	Mitel	MT5091	
	TI	TCM5091	
MK5092	Mitel	MT5092	
	National	TP5092	
	TI	TCM5092	
MK5094	National	TP5094	
MK50981	National	TP50981	
MK50982	National	TP50982	
MK5116	Fairchild	5116	
	National	TP5116	
	SGS	M5116	
MK5117	Fairchild	5116-1	
MK5151	Fairchild	5151	
MK5156	Fairchild	5156	
	National	TP5156	
	SGS	M5156	
MK5912	GTEMicro	G8912	
	Intel	2912	
		ID2912	
	Mostek	MK8912	
	National	TP3040	
	Plessey	MV8912	
	TI	TCM2912	
		TCM2912B	
MK6116	Fujitsu	MB8416	
	Harris	HM65162	
	Hitachi	HM6116	
	IDT	IDT6116	
	MicroPwr	MP6116	
	Motorola	MCM6116	
	NEC	**μPD446**	**4090**
	RCA	CDM6116	
	SMOS	SRM2016	
	Toshiba	TC5517A	
		TC5517B	
MK68000	Hitachi	HD68000	
	Motorola	MC68000	
	Rockwell	R68000	
	Signetics	**SCN68000**	**1689,1690**
	Thomson-CSF		
		EF68000	
MK68008	**Motorola**	**MC68008**	**1506,1508**
MK68010	**Motorola**	**MC68010**	**1506,1508**
MK68200	Motorola	MC68200	
MK68230	Motorola	MC68230	
	Signetics	SCN68230	
MK68440	**Motorola**	**MC68440**	**1506,1510**
MK68451	**Motorola**	**MC68451**	**1506,1510**
MK68564	**Motorola**	**MC68564**	**1506,1511**
MK68901	**Motorola**	**MC68901**	**1506,1512**
MK8865	GTEMicro	G8865	
	Mitel	MT8865	
	Plessey	MV8865	
MK8912	GTEMicro	G8912	
	Intel	2912	
		ID2912	
	Mostek	MK5912	
	National	TP3040	
	Plessey	MV8912	
	TI	TCM2912	
		TCM2912B	
MKB2716	Fujitsu	MBM2716	
	Intel	M2716	
	National	MM2716M	

Motorola Semiconductor Products

Manufacturer Device	Replacement Source	Device	IC Master Page
100416	Signetics	100149	
81LS97	National	DM74LS797	
81LS98	National	DM74LS798	
AD562	AMD	AM6012	
	AD	AD562	
	Burr-Brown	DAC862	
	Datel	DAC-562	
	Harris	HI562	
	MCE	MCE-6012	
	MicroPwr	MP562	
	NEC	μPC6012	
		μPC648	
	PMI	DAC-312	
		DAC312B12	
	Raytheon	DAC-6012	
		DAC6012	
	Signetics	**AM6012**	**3605**
	TeledyneP	4068	
AD563	AD	AD563	
	Burr-Brown	DAC863	
AM26LS31	AMD	AM26LS31	
	National	DS26LS31	
	TI	AM26LS31	
CA3054	Fairchild	μA3054	
	National	LM3054	
	RCA	CA3054	
	SiliconG	SG3822	
	Sprague	ULN-2054	
	Thomson-CSF		
		SFC2054	
CA3059	**RCA**	**CA3059**	**3603**
	SiliconG	SG3059	
CA3079	**RCA**	**CA3079**	**3603**
	SiliconG	SG3079	
◆CA3139	RCA	CA3139	
DAC-08	AMD	AM1408	
		SSS1408	
	AD	AD1408	
		ADDAC-08	
	Datel	DAC-08B	
		DAC-I8BC	
		DAC-IC8B	
		DAC-IC8BC	**2863**
	Fairchild	DAC-08	
		MA0802M	
		μA0801	
		μA0802	
	Motorola	MC1408	
	National	DAC0800	
		DAC0801	
		DAC0802	
		DAC0806	
		DAC0807	
		DAC0808	
	NEC	μPC624	
	PMI	DAC-08	
		DAC-1408	
	Raytheon	**DAC-08**	**3591**
	Signetics	MC1408	
DC26S10	AMD	AM26S10	
	Fairchild	9640	
	National	DS26S10	
	TI	AM26S10	
DS36147	National	DS36147	
DS36177	National	DS36177	
DS8641	National	DS8641	
LF155	AMD	LF155	
	Intersil	LF155	
	National	LF155	
	PMI	OP-15	
		PM155	
	Thomson-CSF		
		TDC0155	
◆LF156	AMD	LF156	
	Intersil	LF156	
	MicroPwr	OP-16	
	National	LF156	
	PMI	OP-16	
		PM156	
	Thomson-CSF		
		TDC0156	
◆LF157	AMD	LF157	
	Intersil	LF157	
	MicroPwr	OP-17	
	National	LF157	
	PMI	OP-17	
		PM157	
	Signetics	LF157	
	Thomson-CSF		
		TDC0157	
◆LF255	AMD	LF255	
	National	LF255	
◆LF255	PMI	PM255	
	Thomson-CSF		
		TDE0155	
◆LF256	AMD	LF256	
	National	LF256	
	Thomson-CSF		
		TDE0156	
◆LF257	AMD	LF257	
	National	LF257	
	Thomson-CSF		
		TDE0157	
LF355	AMD	LF355	
	Intersil	LF355	
	National	LF355	
	PMI	PM355	
LF356	AMD	LF356	
	Intersil	LF356	
	National	LF356	
	PMI	PM356	
	Signetics	LF356	
LF357	AMD	LF357	
	AnalogSys	LF357	
	Intersil	LF357	
	National	LF357	
	PMI	PM357	
LM101	AMD	LM101	
	AD	AD101	
	Fairchild	μA101	
	Intersil	AD101	
	LinearTech	LM101	
	Raytheon	LM101	
	SiliconG	SG101	
	TI	LM101	
	Thomson-CSF		
		SFC2101	
LM108	AMD	LM108	
	AD	**AD108**	**3351**
	Fairchild	μA108	
		μA725	
	Intel	ISBC108	
	Intersil	ICL108	
		LM108	
	LinearTech	LM108	
		LM108A	
		OP-05	
	MicroPwr	MP5501	
		MP5505	
		MPLM108A	
		OP-08	
	National	LM108	
		LM108A	
	NEC	μPC154	
	PMI	OP-01	
		OP-05	**3566**
		OP-06	
		OP-07	**3566**
		PM108	
		PM725	
	Raytheon	**OP-05**	**3592**
		OP-07	**3592**
		RC725	
		RM725	
	Signetics	LM108	
LM109	Fairchild	μA109	
	National	LM109	
	SiliconG	SG109	
	TI	SN55109	
	Thomson-CSF		
		SFC2109	
LM11	LinearTech	LM11	
	National	LM11	
LM111	AMD	LM111	
	AD	AD111	
	Fairchild	μA111	
	Intersil	LM111	
	National	LM111	
	Raytheon	LM111	
	Signetics	LM111	
	SiliconG	SG111	
	TI	LM111	
	Thomson-CSF		
		SFC2111	
◆LM112	AMD	LM112	
	National	LM112	
LM117	LinearTech	LM117	
	MCE	MCE-LM117	
	National	LM117	
	SiliconG	SG117	
	TI	LM117	
LM123	LinearTech	LM123	
	Motorola	MC78T05	
	National	LM123	

(Continued)

◆ Discontinued

Bold face device numbers indicate manufacturers data is provided in the IC Master on the pages noted.

© IC MASTER 1984

Motorola Semiconductor Products (Cont'd)

Manufacturer Device	Replacement Source	Device	IC Master Page
LM123	SiliconG	SG123	
	TI	SN55123	
LM124A	AMD	LM124A	
	National	LM124A	
	RCA	CA124A	
	Signetics	LM124A	
	SiliconG	SG124	
	TI	LM124A	
LM137	LinearTech	LM137	
	MCE	MCE-LM137	
	National	LM137	
	TI	LM137	
LM139	AMD	LM139	
	Fairchild	μA139	
	National	LM139	
	PMI	CMP-04	
		PM139	
	Raytheon	LM139	
	RCA	**CA139**	**3599**
	Signetics	LM139	
	SiliconG	SG139	
	TI	LM139	
LM139A	AMD	LM139A	
	National	LM139A	
	PMI	CMP-04	
		PM139A	
	RCA	**CA139A**	**3599**
	SiliconG	SG139A	
	TI	LM139A	
LM150	LinearTech	LM150	
	National	LM150	
	SiliconG	SG150	
LM158	National	LM158A	
	Raytheon	RM4139	
	RCA	CA158A	
	Signetics	LM158	
	TI	LM158	
◆LM185	LinearTech	LM185	
	National	LM185	
LM193	Fairchild	μA193	
	National	LM193A	
	Signetics	LM193	
	TI	LM193	
LM201	AMD	LM201	
	AD	AD201	
	Fairchild	μA201	
		μA748	
	Intersil	LM748	
		μA748	
	Motorola	MC1748	
	National	LM201	
		LM748	
	Plessey	SL748	
	RCA	CA201	
		CA748	
		LM748	
	SiliconG	SG201	
		SG748	
	TI	LM201	
		SN72748P	
		μA748	
	Thomson-CSF		
		SFC2201	
		SFC2748	
LM208	AMD	LM208	
	AD	**AD208**	**3351**
	Fairchild	μA208	
	LinearTech	OP-05	
	MicroPwr	MP5505	
		MP5508	**3529**
		MPLM208	**3529**
	National	LM208	
	PMI	**OP-05**	**3586**
		PM208	
	Raytheon	**OP-05**	**3592**
	SiliconG	SG208	
	TI	μA714	
	Thomson-CSF		
		SFC2208	
LM209	AMD	LM209	
	Fairchild	μA209	
	Lambda	LLM209	
	National	LM209	
	SiliconG	SG209	
	Thomson-CSF		
		SFC2209	
LM211	AMD	LM211	
	AD	AD211	
	National	LM211	
			(Continued)

Manufacturer Device	Replacement Source	Device	IC Master Page
LM211	RCA	LM211	
	Signetics	LM211	
	SiliconG	SG211	
	TI	LM211	
	Thomson-CSF		
		SFC2211	
◆LM212	AMD	LM212	
	SiliconG	SG212	
LM217	MCE	MCE-LM217	
	National	LM217	
	SiliconG	SG217	
	TI	LM217	
	Thomson-CSF		
		TDE0117	
LM223	Lambda	LLM223	
	National	LM223	
	SiliconG	SG223	
	Thomson-CSF		
		TDE0123	
LM224	AMD	LM224	
	Fairchild	μA224	
	National	LM224	
	Raytheon	LM224	
	RCA	CA224	
	Signetics	LM224	
	SiliconG	SG224	
	TI	LM224	
	Thomson-CSF		
		TDE0124	
LM239	AMD	LM239	
	Fairchild	μA239	
	National	LM239	
	PMI	CMP-04	
		PM239	
	Raytheon	LM239	
	RCA	**CA239**	**3599**
	Signetics	LM239	
	SiliconG	SG239	
	TI	LM239	
	Thomson-CSF		
		TDE0139	
LM239A	AMD	LM239A	
	National	LM239A	
	PMI	**CMP-04**	
	RCA	**CA239A**	**3599**
	SiliconG	SG239A	
LM250	National	LM250	
	SiliconG	SG250	
LM258	National	LM258A	
	RCA	CA258A	
	Signetics	LM258	
	TI	LM258	
	Thomson-CSF		
		TDE0158	
LM285	National	LM285	
LM2900	Hitachi	HA17301	
	Motorola	MC3301	
	National	LM2900	
		LM3301	
	Raytheon	LM2900	
		RC3301	
	TI	LM2900	
LM2901	Fairchild	μA2901	
		μA3302	
	Motorola	MC3302	
	National	LM2901	
		LM3302	
	NEC	μPC2901	
	PMI	CMP-04	
	Raytheon	LM2901	
		RC3302	
	RCA	CA3302	
	Signetics	LM2901	
		MC3302	
	SiliconG	SG3302	
	TI	LM2901	
		LM3302	
LM2902	Fairchild	μA2902	
	Hitachi	HA17902	
	National	LM2902	
	NEC	μPC2902	
	Raytheon	LM2902	
	TI	LM2902	
LM2903	AMD	LM311	
	AD	AD311	
	Fairchild	μA2903	
		μA311	
	Intersil	LM311	
	Motorola	LM311	
	National	LM2903	
		LM311	
	NEC	μPC271	
			(Continued)

Manufacturer Device	Replacement Source	Device	IC Master Page
LM2903	NEC	μPC311	
	Raytheon	LM311	
	RCA	**CA311**	**3598**
		LM311	
	Signetics	LM2903	
		LM311	
	SiliconG	SG311	
	TI	LM2903	
		LM311	
	Thomson-CSF		
		SFC2311	
		SFC3111	
LM2904	National	LM2904	
	RCA	CA2904	
	TI	LM2904	
LM293	Fairchild	μA293	
	National	LM293	
	Signetics	LM293	
	TI	LM293	
LM301	AD	AD301	
	Fairchild	μA301A	
	Intersil	AD301	
	LinearTech	LM301	
		LM301A	
	National	LM301	
		LM301A	
	NEC	μPC157	
		μPC301	
	Raytheon	LM301	
	RCA	CA301	
		LM301	
	SiliconG	SG301	
	TI	LM301	
		LM301A	
	Thomson-CSF		
		SFC2301	
	Toshiba	TA7506	
LM307	AMD	LM307	
	AD	**AD741J**	**3351**
	Intersil	LM307	
	LinearTech	LM307	
	National	LM307	
	Raytheon	LM307	
	RCA	CA307	
	SiliconG	SG307	
	TI	LM307	
	Thomson-CSF		
		SFC2307	
LM308	AMD	LM308	
	AD	**AD308**	**3351**
	Burr-Brown	3500	
		3501	
	Fairchild	μA308	
	Intersil	AD308	
		LM308	
	MicroPwr	MP5505	
		MPLM308	**3529**
	National	LM308	
	Raytheon	LM308	
	SiliconG	SG308	
	Thomson-CSF		
		SFC2308	
LM309	AMD	LM309	
	Fairchild	μA309	
		μA7805	
	Lambda	LLM309	
		LMC7805	
		LμA7805	
	Motorola	**MC7805**	**3531**
	National	LM309	
		LM7805	
	NEC	μPC7805	
	SGS	L7805	
		L7810	
	SiliconG	SG309	
		SG340-05	
		SG340-5	
	TI	μA7805	
	Thomson-CSF		
		SFC2309	
	Toshiba	TA78005	
LM311	AMD	LM311	
	AD	AD311	
	Fairchild	μA2903	
		μA311	
	Intersil	LM311	
	Motorola	LM2903	
	National	LM2903	
		LM311	
	NEC	μPC271	
		μPC311	
	Raytheon	LM311	
			(Continued)

Manufacturer Device	Replacement Source	Device	IC Master Page
LM311	**RCA**	**CA311**	**3598**
		LM311	
	Signetics	LM2903	
		LM311	
	SiliconG	SG311	
	TI	LM2903	
		LM311	
	Thomson-CSF		
		SFC2311	
		SFC3111	
◆LM312	AMD	LM312	
	National	LM312	
	SiliconG	SG3118	
LM317	Fairchild	μA317	
	LinearTech	LM317	
	MCE	MCE-LM317	
	National	LM317	
	SiliconG	SG317	
	TI	LM317	
	Thomson-CSF		
		TDB0117	
LM317M	National	LM317M	
LM323	Fairchild	SH0323	
		SH323	
		μA78H05	
	Lambda	LAS1405	
		LAS1905	
	LinearTech	LM323	
	Micropac	M78H05	
	Motorola	MC78T05C	
	National	LM323	
	SiliconG	SG323	
LM324	AMD	LM324	
	Exar	**XR3403**	**3378**
		XR3403C	
	Fairchild	μA324	
		μA3403	
	Motorola	MC3403	
	National	LM324	
	NEC	μPC324	
	Raytheon	LM324	
		RC3403	
		RC4137	
	RCA	CA324	
		LM324	
	Sanyo	LA6324	
	Signetics	LM324	
		MC3403	
	SiliconG	SG324	
	TI	LM324	
		MC3403	
	Thomson-CSF		
		TDB0124	
LM339	AMD	LM339	
		LM339A	
	Fairchild	μA339	
	Hitachi	HA17901	
	National	LM339	
	NEC	μPC339	
	PMI	CMP-04	
		PM339A	
	Raytheon	LM339	
	RCA	**CA339**	**3599**
		CA339A	**3599**
		LM339	
	SiliconG	SG339	
	TI	LM339	
	Thomson-CSF		
		TDB0139	
LM350	Fairchild	μA78HGA	
	Lambda	LAS14U	
		LAS19U	
	LinearTech	LM350	
	National	LM350	
	SiliconG	SG350	
	TI	LM350	
LM358	National	LM358A	
	NEC	μPC358	
	RCA	CA358A	
		LM358	
	Sanyo	LA6358	
	Signetics	LM358	
		NE532	
	TI	LM358	
LM385	LinearTech	LM385	
	National	LM385	
LM393	Fairchild	μA393	
	National	LM393	
	Sanyo	LA6393	
	Signetics	LM393	
	TI	LM393	

◆ Discontinued

The manufacturers report their devices can be used as direct replacements.
Performance details often differ, so compare the specifications considering your requirements.

IC MASTER

INTERNATIONAL DISTRIBUTORS

ARGENTINA, COLUMBIA, ECUADOR, VENEZUELA, MEXICO, PERU
Intectra
2629 Terminal Blvd.
Mt. View, CA 94043
Tel. (415) 967-8818

AUSTRALIA
A J Distributors Pty Ltd.
P.O. Box 71
Prospect, S. Australia 5082
Tel. 269-1244
Telex (790) 82635

AUSTRIA
Becos Electronic Ges. M.G.H.
Gablenzgasse 52
A-1160 Vienna, Austria
Tel. 0222/959145
Telex (847) 134606

BELGIUM
J. P. LeMaire S.A.
Limberg, Stirum 243
1810 Wemmel, Belgium
Tel. 02/4784847
Telex (846) 24610

BRAZIL
Filcres Importacao
Rua Aurora
CEP 01209
Caixa Postal 18767
Sao Paulo, Brazil
Tel. (011) 223 7388
Telex (391) 113298

CANADA
Future Electronics
237 Hymus Blvd.
Pointe Claire
Quebec H9R 5C7
Canada
Tel. 514-694-7710
TWX: 610-421-3251
Telex 05-823554

DENMARK
Advanced Electronik
55, Mariendalsvej
DK2000, Copenhagen F,
Denmark
Tel. 01 194433
Telex (855) 22431

ENGLAND
Paterson/Steadman & Partner Ltd.
The Hub
Emson Close
Saffron Walden, Essex
CB10 1HL, England
Tel. 27067
Telex (851) 81653

J. B. Tratsart Ltd.
Dogmersfield Nr.
Baskingstroke
Hampshire RG27 8SU,
England
Tel. 02514 3334
Telex (851) 916196

FINLAND
ITT Multikomponent
Tyopajakatu 5
PL107,00501
Helsinki 50, Finland
Tel. 739100
Telex (857) 121450

FRANCE
Conseilet Promotion
28 Rue de la Procession
92150 Suresnes, France
Tel. 5064275
Telex (842) 614596F

HOLLAND
Manudax-Nederland B.V.
54732G Heeswijk (N.B.)
Meerstraat 7. Holland
Tel. 04139 2901
Telex (844) 50175

HONG KONG
Conmos Products, Ltd.
Haynein Bldg., 11th Floor
1 Tai Yip Street
Keun Tong, Kowloon,
Hong Kong
Tel. 3-684572
Telex (780) 85448

INDIA, MALAYSIA, SINGAPORE, THAILAND
Radio & Craft Publications
4794/23 Bharat Ram Road
Daryanganj, New Delhi 2,
India
Tel. 277147

ISRAEL
STG International Ltd.
10 Humberman Street
P. O. Box 1276
61012 Tel Aviv, Israel
Tel. 248231
Telex (922) 342229

ITALY
Gruppo Editoriale Jackson S.R.L.
Via Rosellini 12
20124 Milan, Italy
Tel. 68 80951
Telex (843) 315366

JAPAN
Asahi Glass Company, Ltd. Electronic Components Group
1-2 Marunouchi 2-chome
Chiyoda-ku, Tokyo 100,
Japan
Tel. (03) 218-5813
Telex (781) TK4616

Overseas Data Service Co. Ltd.
Shugetsu Building No. 12-7
Kita-Aoyama 3-chome
Minato-ku. Tokyo 107. Japan
Tel. (03) 400-7090
Telex (781) J26487

Tokyo International Communications Inc.
Miyajima Bldg.
28 Yoyogi 1-chome,
Shibuya-ku
Tokyo 151, Japan
Tel. 379-2561
Telex (781) 33106

NORWAY
Fagbokservice A.S.
Ekebergn, 130B
Box 94
Bekkelagshogda, Oslo 2,
Norway
Tel. (02) 282237

SOUTH AFRICA
Suntronika
Dargene House,
10 Station Street
Braamfontein, Johannesburg
South Africa
Tel. 725-1210
Telex (960) 4-24143

SPAIN
Sagitron
Castello 25, 2, °
Madrid 1, Spain
Tel. 402 6085
Telex (831) 43819

SWEDEN
Fertronic AB
Snormakarvagen 35
Box 56,
16126 Bromma, Sweden
Tel. 08/252610
Telex (854) 11181

SWITZERLAND
W. Stolz AG
Taefernstrasse 15
CH-5404 Baden-Daettwil
Switzerland
Tel. 056 840151
Telex (845) 54070Z

TAIWAN
Helm Engineering & Trading Co.
49 No. 143 Section 4
Hsin Yi Rd.
Taipei, Taiwan, ROC
Tel. 709-1888
Telex (785) 28204

TURKEY
EMPA Elektronik (Mamulleri Pazarlama AS)
Tersane Cad. Kuthan 38/408
Tr-Kara Koy — Istanbul,
Turkey
Tel. (11) 496249
Telex 24429

WEST GERMANY
Astronic GmbH
Winzererstrasse 47d
8000 Munich 40,
West Germany
Tel. (089) 309031
Telex (841) 5216187

Hearst
HEARST BUSINESS COMMUNICATIONS, INC./UTP DIVISION
645 Stewart Avenue, Garden City, NY 11530 (516) 222-2500 TWX: 510-222-1673

Don't Miss the
IC Updates

These quarterly updates keep your IC Master current the year 'round.

Look for them in Integrated Circuits Magazine

Motorola Semiconductor Products (Cont'd)

Manufacturer Device	Replacement Source	Device	IC Master Page
LM710	Fairchild	μA710	
	Motorola	MC1710	
	National	LM710	
	PMI	CMP-01	
		CMP-02	
	SiliconG	SG710	
	TI	μA710	
	Thomson-CSF		
		SFC2710	
LM741	**AD**	**AD741**	**3351**
	Fairchild	3871	
		μA741	
	Hitachi	HA17741	
	Intersil	AD741	
		ICL741	
	MicroPwr	MP5501	
		MP5502	**3529**
		OP-02	**3529**
	Mostek	MK3871	
	Motorola	MC1741	
	National	LM741	
	NEC	μPC151	
		μPC741	
	PMI	OP-01	
		OP-02	**3566**
		PM741	
		SSS741	
	Raytheon	RC741	
		RM741	
	RCA	CA3056	
		CA741	
	Signetics	μA741	
	SiliconG	SG300	
		SG741	
	TI	μA741	
	Thomson-CSF		
		SFC2741	
	Toshiba	TA7504	
M5140	Motorola	MC1358	
	National	LM3064	
	RCA	CA3064	
		CA3065	
	Sanyo	LA1365	
	TI	SN76666	
MC10100	Fairchild	F10100	
	Signetics	**10100**	**858**
MC10101	Fairchild	F10101	
	Hitachi	HD10101	
	Signetics	**10101**	**858**
MC10102	Fairchild	F10102	
	Hitachi	HD10102	
	Signetics	**10102**	**858**
MC10103	Fairchild	F10103	
	Signetics	**10103**	**858**
MC10104	Fairchild	F10104	
	Hitachi	HD10104	
	Signetics	**10104**	**858**
MC10105	Fairchild	F10105	
	Hitachi	HD10105	
	Signetics	**10105**	**858**
MC10106	Fairchild	F10106	
	Hitachi	HD10106	
	Signetics	**10106**	**858**
MC10107	Fairchild	F10107	
	Hitachi	HD10107	
	Signetics	**10107**	**858**
MC10109	Fairchild	F10109	
	Hitachi	HD10109	
	Signetics	**10109**	**858**
MC10110	Fairchild	F10110	
	Hitachi	HD10110	
	Signetics	**10110**	**858**
MC10111	Fairchild	F10111	
	Hitachi	HD10111	
	Signetics	**10111**	**858**
MC10113	Fairchild	F10113	
	Signetics	**10113**	**858**
MC10114	Fairchild	F10114	
	Signetics	**10114**	**858**
MC10115	Fairchild	F10115	
	Signetics	**10115**	**858**
MC10116	Fairchild	F10116	
	Hitachi	HD10116	
	National	DM10116	
	Signetics	**10116**	**858**
MC10117	Fairchild	F10117	
	Hitachi	HD10117	
	Signetics	**10117**	**858**
MC10118	Fairchild	F10118	
	Hitachi	HD10118	
	Signetics	**10118**	**858**
MC10119	Fairchild	F10119	
	Hitachi	HD10119	
	Signetics	**10119**	**858**
MC10121	Fairchild	F10121	
	Hitachi	HD10121	
	Signetics	**10121**	**858**
MC10123	Fairchild	F10123	
	Signetics	**10123**	**858**
MC10124	Fairchild	F10124	
	Hitachi	HD10124	
	Signetics	**10124**	**858**
MC10125	Fairchild	F10125	
	Hitachi	HD10125	
	Signetics	**10125**	**858**
MC10128	Signetics	10128	
MC10129	**Signetics**	**10129**	**858**
MC10130	Fairchild	F10130	
	Hitachi	HD10130	
	Signetics	**10130**	**858**
MC10131	Fairchild	F10131	
	Hitachi	HD10131	
	Signetics	**10131**	**858**
MC10132	Fairchild	F10132	
	Hitachi	HD10132	
	Signetics	**10132**	**858**
MC10133	Fairchild	F10133	
	Hitachi	HD10133	
	Signetics	**10133**	**858**
MC10134	Fairchild	F10134	
	Hitachi	HD10134	
	Signetics	**10134**	**858**
MC10135	Fairchild	F10135	
	Signetics	**10135**	**858**
MC10136	Fairchild	F10136	
	Hitachi	HD10136	
	Signetics	**10136**	**858**
MC10137	Fairchild	F10137	
	Signetics	**10137**	**858**
MC10138	Signetics	10138	
MC10141	Fairchild	F10141	
	Signetics	**10141**	**858**
MC10158	Fairchild	F10158	
	Signetics	**10158**	**858**
MC10159	Fairchild	F10159	
	Signetics	**10159**	**858**
MC10160	Fairchild	F10160	
	Hitachi	HD10160	
	Signetics	**10160**	**858**
MC10161	Fairchild	F10161	
	Hitachi	HD10161	
	NEC	μPB10161	
	Signetics	**10161**	**858**
MC10162	Fairchild	F10162	
	Hitachi	HD10162	
	Signetics	**10162**	**858**
MC10164	Fairchild	F10164	
	Hitachi	HD10164	
	Signetics	**10164**	**858**
	TI	SN10164	
MC10165	Fairchild	F10165	
	Hitachi	HD10165	
	Signetics	**10165**	**858**
MC10168	Fairchild	F10168	
MC10170	Signetics	10170	
MC10171	Fairchild	F10171	
	Signetics	**10171**	**858**
MC10172	Fairchild	F10172	
	Signetics	**10172**	**858**
MC10173	Fairchild	F10173	
	Signetics	**10173**	**858**
MC10174	Fairchild	F10174	
	Hitachi	HD10174	
	Signetics	**10174**	**858**
	TI	SN10174	
MC10175	Fairchild	F10175	
	Hitachi	HD10175	
	Signetics	**10175**	**858**
	TI	SN10175	
MC10176	Fairchild	F10176	
	Signetics	**10176**	**858**
MC10177	Fairchild	F10177	
MC10178	Fairchild	F10178	
	Signetics	10178	
MC10179	Fairchild	F10179	
	Hitachi	HD10179	
	Signetics	**10179**	**858**
MC10180	Fairchild	F10180	
	Hitachi	HD10180	
	Signetics	**10180**	**858**
MC10181	Fairchild	F10181	
	Hitachi	HD10181	
	Signetics	**10181**	**858**
MC10186	Fairchild	F10186	
	Signetics	10186	
MC10188	**Signetics**	**10188**	**858**
MC10189	**Signetics**	**10189**	**858**
MC10190	Signetics	10190	
MC10191	Signetics	10191	
MC10192	Fairchild	F10192	
	Signetics	**10192**	**858**
MC10195	Signetics	10195	
MC10210	Fairchild	F10210	
	Signetics	**10210**	**858**
MC10211	Fairchild	F10211	
	Signetics	**10211**	**858**
MC10212	Fairchild	F10212	
	Signetics	10212	
MC10216	Fairchild	F10216	
	Signetics	**10216**	**858**
MC10231	Fairchild	F10231	
	Signetics	**10231**	**858**
MC10501	Fairchild	F10501	
MC10502	Fairchild	F10502	
MC10503	Fairchild	F10503	
MC10504	Fairchild	F10504	
MC10505	Fairchild	F10505	
MC10506	Fairchild	F10506	
MC10507	Fairchild	F10507	
MC10509	Fairchild	F10509	
MC10513	Fairchild	F10513	
MC10514	Fairchild	F10514	
MC10515	Fairchild	F10515	
MC10516	Fairchild	F10516	
MC10524	Fairchild	F10524	
MC10525	Fairchild	F10525	
MC10530	Fairchild	F10530	
MC10531	Fairchild	F10531	
MC10535	Fairchild	F10535	
MC10541	Fairchild	F10541	
MC10558	Fairchild	F10558	
MC10562	Fairchild	F10562	
MC10564	Fairchild	F10564	
MC10566	Fairchild	F10566	
MC10574	Fairchild	F10574	
MC10576	Fairchild	F10576	
MC10H145	Fairchild	F10402	
MC12015	National	DS8615	
MC12017	National	DS8617	
MC12071	National	DS8621	
MC1309	Sprague	ULN-3809	
◆MC1324	Sprague	ULN-2224	
MC1327	Motorola	TDA1327	
	TI	SN76227	
MC1350	TI	SN76600	
	Thomson-CSF		
		ESM1350	
MC1351	TI	SN76651	
MC1356	Fairchild	ULN-2136	
		μA2136	
	RCA	CA2136	
	TI	SN76669	
MC1357	National	LM2111	
	RCA	CA2111	
	Signetics	N5111	
	Sprague	ULN-2111	
	TI	SN76642	
		SN76643	
MC1358	Motorola	M5140	
	National	LM3064	
	RCA	CA3064	
		CA3065	
	Sanyo	LA1365	
	TI	SN76666	
MC1391	National	LM1391	
	RCA	CA1391	
MC1394	National	LM1394	
	RCA	CA1394	
MC1398	RCA	CA1398	
MC14000	National	CD4000	
	RCA	CD4000	
	SGS	HCF4000	
	Signetics	HEF400	
	SSS	SCL4000	
	Solitron	CM4000	
MC14001	Fairchild	F4001	
	Hitachi	HD14001	
	National	CD4001	
		MM74C02	
	OKI	MSM4001	
	RCA	CD4001	
	Sanyo	LC4001B	
		(Continued)	
MC14001	SGS	HCF4001	
	Signetics	HEF4001	
	SSS	SCL4001	
	Solitron	CM4001	
	Toshiba	TC4001	
MC14002	Fairchild	F4002	
	Hitachi	HD14002	
	National	CD4002	
	RCA	CD4002	
	SGS	HCF4002	
	Signetics	HEF4002	
	SSS	SCL4002	
	Solitron	CM4002	
	Toshiba	TC4002	
MC14007	Fairchild	F4007	
	Hitachi	HD14007	
	National	CD4007	
	RCA	CD4007	
	SGS	HCF4007	
	Signetics	HEF4007	
	SSS	SCL4007	
	Solitron	CM4007	
	Toshiba	TC4007	
MC14008	Fairchild	F4008	
	Hitachi	HD14008	
	National	CD4008	
		MM74C83	
	RCA	CD4008	
	SGS	HCF4008	
	Signetics	HEF4008	
	SSS	SCL4008	
	Solitron	CM4008	
	Toshiba	TC4008	
MC1400AU10	PMI	REF-01EZ	
MC1400AU5	PMI	REF-02EZ	
MC14011	Fairchild	F4011	
	Hitachi	HD14011	
	National	CD4011	
		MM74C00	
	OKI	MSM4011	
	RCA	CD4011	
	Sanyo	LC4011	
	SGS	HCF4011	
	Signetics	HEF4011	
	SSS	SCL4011	
	Solitron	CM4011	
	Toshiba	TC4011	
MC14012	Fairchild	F4012	
	Hitachi	HD14012	
	National	CD4012	
	RCA	CD4012	
	SGS	HCF4012	
	Signetics	HEF4012	
	SSS	SCL4012	
	Solitron	CM4012	
	Toshiba	TC4012	
MC14013	Fairchild	F4013	
	Hitachi	HD14013	
	National	CD4013	
		MM74C74	
	OKI	MSM4013	
	RCA	CD4013	
	Sanyo	LC4013	
	SGS	HCF4013	
	Signetics	HEF4013	
	SSS	SCL4013	
	Solitron	CM4013	
	Toshiba	TC4013	
MC14014	Fairchild	F4014	
	Hitachi	HD14014	
	National	CD4014	
	RCA	CD4014	
	SGS	HCF4014	
	Signetics	HEF4014	
	SSS	SCL4014	
	Solitron	CM4014	
	Toshiba	TC4014	
MC14015	Fairchild	F4015	
	Hitachi	HD14015	
	National	CD4015	
		MM74C164	
	OKI	MSM4015	
	RCA	CD4015	
	Sanyo	LC4015	
	SGS	HCF4015	
	Signetics	HEF4015	
	SSS	SCL4015	
	Solitron	CM4015	
	Toshiba	TC4015	
MC14016	Fairchild	F4016	
		F4066	
	Hitachi	HD14016	
		(Continued)	

◆ Discontinued

Bold face device numbers indicate manufacturers data is provided in the IC Master on the pages noted.

Motorola Semiconductor Products (Cont'd)

Manufacturer Device	Replacement Source	Device	IC Master Page
MC14016	Hitachi	HD14066	
	Motorola	MC14066	
	National	CD4016	
		CD4066	
	RCA	CD4016	
		CD4066	
	Sanyo	LC4016	
		LC4066	
	SGS	HCF4016	
		HCF4066	
	Signetics	**HEF4016**	**864**
		HEF4066	
	SSS	SCL4016	
		SCL4066	
	Solitron	CM4016	
		CM4066	
		HCF4016	
	Toshiba	TC4016	
		TC4066	
MC14017	Fairchild	F4017	
	Hitachi	HD14017	
	National	CD4017	
	RCA	CD4017	
	SGS	HCF4017	
	Signetics	HEF4017	
	SSS	SCL4017	
	Solitron	CM4017	
	Toshiba	TC4017	
MC14018	Fairchild	F4018	
	Hitachi	HD14018	
	National	CD4018	
	RCA	CD4018	
	SGS	HCF4018	
	Signetics	HEF4018	
	SSS	SCL4018	
	Solitron	CM4018	
	Toshiba	TC4018	
MC14020	Fairchild	F4020	
	Hitachi	HD14020	
	National	CD4020	
	RCA	CD4020	
	SGS	HCF4020	
	Signetics	HEF4020	
	SSS	SCL4020	
	Solitron	CM4020	
	Toshiba	TC4020	
MC14021	Fairchild	F4021	
	Hitachi	HD14021	
	National	CD4021	
	RCA	CD4021	
	SGS	HCF4021	
	Signetics	HEF4021	
	SSS	SCL4021	
	Toshiba	TC4021	
MC14022	Fairchild	F4022	
	Hitachi	HD14022	
	National	CD4022	
	RCA	CD4022	
	SGS	HCF4022	
	Signetics	HEF4022	
	SSS	SCL4022	
	Solitron	CM4022	
	Toshiba	TC4022	
MC14023	Fairchild	F4023	
	Hitachi	HD14023	
	National	CD4023	
		MM74C10	
	RCA	CD4023	
	SGS	HCF4023	
	Signetics	HEF4023	
	SSS	SCL4023	
	Solitron	CM4023	
	Toshiba	TC4023	
MC14024	Fairchild	F4024	
	Hitachi	HD14024	
	National	CD4024	
	RCA	CD4024	
	SGS	HCF4024	
	Signetics	HEF4024	
	SSS	SCL4024	
	Solitron	CM4024	
	Toshiba	TC4024	
MC14025	Fairchild	F4025	
	Hitachi	HD14025	
	National	CD4025	
	RCA	CD4025	
	SGS	HCF4025	
	Signetics	HEF4025	
	SSS	SCL4025	
		(Continued)	

Manufacturer Device	Replacement Source	Device	IC Master Page
MC14025	Solitron	CM4025	
	Toshiba	TC4025	
MC14027	Fairchild	F4027	
	Hitachi	HD14027	
	National	CD4027	
		MM74C76	
	OKI	MSM4027	
	RCA	CD4027	
	Sanyo	LC4027	
	SGS	HCF4027	
	Signetics	HEF4027	
	SSS	SCL4027	
	Solitron	CM4027	
MC14028	Fairchild	F4028	
	Hitachi	HD14028	
	National	CD4028	
		MM74C42	
	OKI	MSM4028	
	Sanyo	LC4028	
	SGS	HCF4028	
	Signetics	HEF4028	
	SSS	SCL4028	
	Solitron	CM4028	
	Toshiba	TC4028	
MC14029	Fairchild	F4029	
	National	CD40192	
		CD4029	
	RCA	CD40192	
		CD4029	
	SGS	HCF40192	
		HCF4029	
	Signetics	HEF40192	
	SSS	SCL4029	
		SCL4192	
	Solitron	CM4029	
	Toshiba	TC40192	
		TC4029	
MC1403	**AD**	**AD1403**	**2842**
	SiliconG	SG1403	
MC14032	Hitachi	HD14032	
	RCA	CD4032	
	SGS	HCF4032	
	Solitron	**CM4032**	
	Toshiba	TC4032	
MC14034	Fairchild	F4034	
	Hitachi	HD14034	
	National	CD4034	
	RCA	CD4034	
	SGS	HCF4034	
	SSS	SCL4034	
	Solitron	CM4034	
	Toshiba	TC4034	
MC14035	Fairchild	F4035	
	Hitachi	HD14035	
	RCA	CD4035	
	SGS	HCF4035	
	Signetics	HEF4035	
	Solitron	CM4035	
	Toshiba	TC4035	
MC14038	Hitachi	HD14038	
	RCA	CD4038	
	SGS	HCF4038	
	Solitron	CM4038	
	Toshiba	TC4038	
MC1404-10	HybridSys	HSREF01	
	MicroPwr	**MP5532**	**3529**
		REF-01	
	Motorola	**MC1504-10**	**3535**
	PMI	REF-01	
	Raytheon	**REF-01**	**3584**
	TeledyneS	9496	
MC1404-5	PMI	REF-02	
	Raytheon	**REF-02**	**3585**
MC14040	Fairchild	F4040	
	Hitachi	HD14040	
	National	CD4040	
	RCA	CD4040	
	SGS	HCF4040	
	Signetics	HEF4040	
	SSS	SCL4040	
	Solitron	CM4040	
	Toshiba	TC4040	
MC14042	Fairchild	F4042	
	Hitachi	HD14042	
	National	CD4042	
	RCA	CD4042	
	SGS	HCF4042	
	Signetics	HEF4042	
	SSS	SCL4042	
	Solitron	CM4042	
	Toshiba	TC4042	

Manufacturer Device	Replacement Source	Device	IC Master Page
MC14043	Hitachi	HD14043	
	National	CD4043	
	RCA	CD4043	
	SGS	HCF4043	
	Signetics	HEF4043	
	SSS	SCL4043	
	Solitron	CM4043	
	Toshiba	TC4043	
MC14044	Fairchild	F4044	
	Hitachi	HD14044	
	National	CD4044	
	RCA	CD4044	
	SGS	HCF4044	
	Signetics	HEF4044	
	Solitron	CM4044	
	Toshiba	TC4044	
MC14046	Fairchild	F4046	
	Hitachi	HD14046	
	National	CD4046	
	RCA	CD4046	
	SGS	HCF4046	
	SSS	SCL4046	
	Solitron	CM4046	
MC14049	Fairchild	F4049	
	Hitachi	HD14049	
	National	CD4049	
	OKI	MSM4049	
	RCA	CD4049	
	Sanyo	LC4049	
	SGS	HCF4049	
	Signetics	HEF4049	
	SSS	SCL4049	
	Solitron	CM4049	
	Toshiba	TC4049	
MC14050	Fairchild	F4050	
	Hitachi	HD14050	
	National	CD4050	
	RCA	CD4050	
	SGS	HCF4050	
	Signetics	HEF4050	
	SSS	SCL4050	
	Solitron	CM4050	
	Toshiba	**TC4050**	
MC14051	Fairchild	F4051	
	Hitachi	HD14051	
	National	CD4051	
	RCA	CD4051	
	SGS	HCF4051	
	Signetics	HEF4051	
	SSS	SCL4051	
	Solitron	CM4051	
	Toshiba	TC4051	
MC14052	Fairchild	F4052	
	RCA	CD4052	
	Signetics	HEF4052	
MC14053	Fairchild	F4053	
	Hitachi	HD14053	
	National	CD4053	
	RCA	CD4053	
	SGS	HCF4053	
	Signetics	HEF4053	
	SSS	SCL4053	
	Solitron	CM4053	
	Toshiba	TC4053B	
MC14060	National	CD4060	
	RCA	CD4060	
	SGS	HCF4060	
	Signetics	HEF4060	
	SSS	SCL4060	
MC14066	Fairchild	F4016	
		F4066	
	Hitachi	HD14016	
		HD14066	
	Motorola	MC14016	
	National	CD4016	
		CD4066	
	RCA	CD4016	
		CD4066	
	Sanyo	LC4016	
		LC4066	
	SGS	HCF4016	
		HCF4066	
	Signetics	**HEF4016**	**864**
		HEF4066	
	SSS	SCL4016	
		SCL4066	
	Solitron	CM4016	
		CM4066	
		HCF4016	
	Toshiba	TC4016	
		TC4066	

Manufacturer Device	Replacement Source	Device	IC Master Page
MC14067	Fairchild	F4067	
	RCA	CD4067	
	SGS	HCF4067	
	Signetics	HEF4067	
MC14068	Fairchild	F4068	
	Hitachi	HD14068	
	RCA	CD4068	
	SGS	HCF4068	
	Signetics	HEF4068	
	SSS	SCL4068	
	Solitron	CM4068	
	Toshiba	TC4068	
MC14069	Fairchild	F4069	
	Hitachi	HD14069	
	National	CD4069	
		MM54C04	
		MM74C04	
	OKI	MSM4069	
	RCA	CD4069	
	Sanyo	LC4069	
	SGS	HCF4069	
	Signetics	HEF4069	
	SSS	SCL4069	
		SCL4449	
	Solitron	CM4069	
	Toshiba	TC4069	
MC14070	Fairchild	F4070	
	Hitachi	HD14070	
	National	CD4070	
		MM74C86	
	RCA	CD4070	
	SGS	HCF4070	
	Signetics	HEF4070	
	SSS	SCL4070	
	Solitron	CM4070	
MC14071	Fairchild	F4071	
	Hitachi	HD14071	
	National	CD4071	
		MM74C32	
	OKI	MSM4071	
	RCA	CD4071	
	Sanyo	LC4071	
	SGS	HCF4071	
	Signetics	HEF4071	
	SSS	SCL4071	
	Solitron	CM4071	
	Toshiba	TC4071	
MC14072	Fairchild	F4072	
	Hitachi	HD14072	
	National	CD4072	
	RCA	CD4072	
	SGS	HCF4072	
	Signetics	HEF4072	
	SSS	SCL4072	
	Toshiba	TC4072	
MC14073	Fairchild	F4073	
	Hitachi	HD14073	
	National	CD4073	
	RCA	CD4073	
	SGS	HCF4073	
	Signetics	HEF4073	
	SSS	SCL4073	
	Solitron	CM4073	
	Toshiba	TC4073	
MC14075	Fairchild	F4075	
	Hitachi	HD14075	
	National	CD4075	
	RCA	CD4075	
	SGS	HCF4075	
	Signetics	HEF4075	
	SSS	SCL4075	
	Solitron	CM4075	
	Toshiba	TC4075	
MC14076	Fairchild	F4076	
	Hitachi	HD14076	
	National	CD4076	
		MM54C173	
		MM74C173	
	RCA	CD4076	
	SGS	HCF4076	
	Signetics	HEF4076	
	SSS	SCL4076	
	Solitron	CM4076	
	Toshiba	TC4076	
MC14077	Fairchild	F4077	
	Hitachi	HD14077	
	National	CD4077	
	RCA	CD4077	
	SGS	HCF4077	
	Signetics	HEF4077	
	SSS	SCL4077	
	Solitron	CM4077	

◆ Discontinued

The manufacturers report their devices can be used as direct replacements.
Performance details often differ, so compare the specifications considering your requirements.

Motorola Semiconductor Products (Cont'd)

Manufacturer Device	Replacement Source	Device	IC Master Page
MC14078	Fairchild	F4078	
	Hitachi	HD14078	
	RCA	CD4078	
	SGS	HCF4078	
	Signetics	HEF4078	
	SSS	SCL4078	
	Solitron	CM4078	
	Toshiba	TC4078	
MC1408	AMD	AM1408	
		SSS1408	
	AD	AD1408	
		ADDAC-08	
	Datel	DAC-08B	
		DAC-I8BC	
		DAC-IC8B	
		DAC-IC8BC	**2863**
	Fairchild	DAC-08	
		MA0802M	
		μA0801	
		μA0802	
	Motorola	**DAC-08**	**3069**
	National	DAC0800	
		DAC0801	
		DAC0802	
		DAC0806	
		DAC0807	
		DAC0808	
	NEC	μPC624	
	PMI	DAC-08	
		DAC-1408	
	Raytheon	**DAC-08**	**3591**
	Signetics	MC1408	
MC14081	Fairchild	F4081	
	Hitachi	HD14081	
	National	CD4081	
		MM74C08	
	OKI	MSM4081	
	RCA	CD4081	
	Sanyo	LC4081	
	SGS	HCF4081	
	Signetics	HEF4081	
	SSS	SCL4081	
	Solitron	CM4081	
	Toshiba	TC4081	
MC14082	Fairchild	F4082	
	Hitachi	HD14082	
	National	CD4082	
	RCA	CD4082	
	SGS	HCF4082	
	Signetics	HEF4082	
	SSS	SCL4082	
	Toshiba	TC4082	
MC14093	Fairchild	F4093	
	Hitachi	HD14093	
	National	CD4093	
	OKI	MSM4093	
	RCA	CD4093	
	Sanyo	LC4093	
	SGS	HCF4093	
	Signetics	HEF4093	
	SSS	SCL4093	
	Toshiba	TC4093	
MC14094	Hitachi	HD14094	
	RCA	CD4094	
	SGS	HCF4094	
	SSS	SCL4094	
	Toshiba	TC4094	
MC14097	Fairchild	F4097	
	RCA	CD4097	
	SGS	HCF4097	
MC14099	Hitachi	HD14099	
	National	CD4099	
	RCA	CD4099	
	SGS	HCF4099	
	SSS	SCL4099	
	Toshiba	TC4099	
MC1411	Exar	XR2001	
		XR2201	
	Fairchild	9665	
	Motorola	ULN2001	
		XR2201	
	NEC	μPA2001	
	RIFA	PBD352301	
	Sanyo	LB1231	
	SGS	L201	
	SiliconG	SG2001	
	Sprague	ULN-2001	
		ULN-2021	
		ULQ-2002	
		(Continued)	
MC1411	Sprague	ULS-2001	
	TI	ULN2001	
	Toshiba	TD62001	
MC1412	Exar	XR2002	
		XR2202	
	Fairchild	9666	
		MC1412	
	Motorola	ULN2002	
	NEC	μPA2002	
	RIFA	PBD352304	
	Sanyo	LB1232	
	SGS	L202	
	Signetics	NE5602	
	Sprague	ULN-2002	
		ULQ-2003	
	TI	ULN2002	
	Toshiba	TD62002	
MC1413	Exar	XR2003	
		XR2004	
		XR2203	
	Fairchild	9667	
		MC1413	
	Mitsubishi	M54523	
	Motorola	ULN2003	
	Sanyo	LB1233	
	SGS	L203	
	Signetics	NE5603	
		ULN2003	
	SiliconG	SG2003	
	Sprague	ULN-2003	
		ULQ-2003	
		ULQ-2004	
		ULS-2003	
		ULS-2004	
	TI	ULN2003	
	Toshiba	TD62003	
MC1414	National	LM1414	
	TI	TL514	
		TL720	
MC1416	Exar	XR2204	
	Fairchild	9668	
	Mitsubishi	M54526	
	Motorola	ULN2004	
	Sanyo	LB1234	
	SGS	L204	
	Signetics	NE5604	
		ULN2004	
	SiliconG	SG2004	
	Sprague	ULN-2004	
		ULS2004	
	TI	ULN2004	
	Toshiba	TD62004	
MC14160	Fairchild	F40160	
	Hitachi	HD14160	
	National	CD40160	
		MM54C160	
		MM74C160	
	RCA	CD40160	
	SGS	HCF40160	
	SSS	SCL4160	
	Toshiba	TC40160	
MC14161	Fairchild	F40161	
	Hitachi	HD14161	
	National	CD40161	
		MM54C161	
		MM74C161	
	RCA	CD40161	
	SGS	HCF40161	
	Signetics	HEF40161	
	SSS	SCL4161	
	Toshiba	TC40161	
MC14162	Fairchild	F40162	
	Hitachi	HD14162	
	National	CD40162	
		MM54C162	
		MM74C162	
	RCA	CD40162	
	SGS	HCF40162	
	Signetics	HEF40162	
	SSS	SCL4162	
	Toshiba	TC40162	
MC14163	Fairchild	F40163	
	Hitachi	HD14163	
	National	CD40163	
		MM54C163	
		MM74C163	
	RCA	CD40163	
	SGS	HCF40163	
	Signetics	HEF40163	
	SSS	SCL4163	
	Toshiba	TC40163	
MC1417	Sprague	UDN-2580	
MC14174	Fairchild	F40174	
	Hitachi	HD14174	
	National	CD40174	
		MM54C174	
		MM74C174	
	RCA	CD40174	
	SGS	HCF40174	
	Signetics	HEF40174	
	SSS	SCL4174	
	Toshiba	TC40174	
MC14175	Fairchild	F40175	
	Hitachi	HD14175	
	National	CD40175	
		MM54C175	
		MM74C175	
	Signetics	HEF40175	
	Toshiba	TC40175	
MC14194	Fairchild	F40194	
	Hitachi	HD14194	
	RCA	CD40194	
	SGS	HCF40194	
	Signetics	HEF40194	
MC1436	**Datel**	**AM-464-2**	**2864**
	Harris	HA-2645	
	Motorola	MC1439	
	National	LM1436	
		LM343	
	SiliconG	SG1436	
	TeledyneP	1332	
MC1439	**Datel**	**AM-464-2**	**2864**
	Harris	HA-2645	
	Motorola	MC1436	
	National	LM1436	
		LM343	
	SiliconG	SG1436	
	TeledyneP	1332	
MC14404	RCA	CD22404	
MC14412	Exar	XR14412	
MC14413	**RCA**	**CD22413**	**840**
MC14414	**RCA**	**CD22414**	**840**
MC14416	RCA	CD22416	
MC14419	RCA	CD22419	
MC14433	TeledyneS	TSC14433	
		TSC14433A	
MC14443	Fairchild	μA9708	
	Motorola	MC14447	
MC14447	Fairchild	μA9708	
	Motorola	**MC14443**	
MC1445	TI	MC1445	
MC14502	Hitachi	HD14502	
	RCA	CD4502	
	SGS	HCF4502	
	Signetics	HEF4502	
	SSS	SCL4502	
MC14503	Fairchild	F40097	
	Hitachi	HD14503	
	National	CD4503	
		MM80C97	
	RCA	CD4503	
	Signetics	HEF40097	
MC14504	Fairchild	F4104	
	Mitel	MD4104	
	National	MM4104	
	RCA	CD40109	
	SGS	HCF40109	
	Signetics	HEF4104	
MC14505	**Signetics**	**HEF4505**	**864**
MC14508	Hitachi	HD14508	
		HD74147	
	National	DM74147	
	RCA	CD4508	
	SGS	HCF4508	
	Signetics	**74147**	**861**
		HEF4508	
		N82147	
	SSS	SCL4508	
	Solitron	CM4508	
	TI	**SN74147**	**970**
	Toshiba	TC4508	
MC14510	Fairchild	F4510	
	Hitachi	HD14510	
	National	CD4510	
	RCA	CD4510	
	SGS	HCF4510	
	Signetics	HEF4510	
	SSS	SCL4510	
	Solitron	CM4510	
	Toshiba	TC4510	
MC14511	Fairchild	F4511	
	Hitachi	HD14511	
	Mitel	MD4511	
	MMI	4511	
		(Continued)	
MC14511	National	CD4511	
	NEC	μPD4511	
	RCA	CD4511	
	SGS	HCF4511	
	Signetics	HEF4511	
	SSS	SCL4511	
	Solitron	CM4511	
	Toshiba	TC4511	
MC14512	Fairchild	F4512	
	Hitachi	HD14512	
	National	CD4512	
	RCA	CD4512	
	SGS	HCF4512	
	SSS	SCL4512	
	Toshiba	TC4512	
MC14514	Fairchild	F4514	
	Hitachi	HD14514	
	National	CD4514	
	RCA	CD4514	
	SGS	HCF4514	
	Signetics	HEF4514	
	SSS	SCL4514	
	Solitron	CM4514	
	Toshiba	TC4514	
MC14515	Fairchild	F4515	
	Hitachi	HD14515	
	National	CD4515	
	RCA	CD4515	
	SGS	HCF4515	
	Signetics	HEF4515	
	SSS	SCL4515	
	Solitron	CM4515	
	Toshiba	TC4515	
MC14516	Fairchild	F4516	
	Hitachi	HD14516	
	National	CD4516	
	RCA	CD4516	
	SGS	HCF4516	
	Signetics	HEF4516	
	SSS	SCL4516	
	Solitron	CM4516	
	Toshiba	TC4516	
MC14517	Hitachi	HD14517	
	RCA	CD4517	
	Signetics	HEF4517	
	SSS	SCL4517	
MC14518	Fairchild	F4518	
	Hitachi	HD14518	
	National	CD4518	
	RCA	CD4518	
	SGS	HCF4518	
	Signetics	HEF4518	
	SSS	SCL4518	
	Solitron	CM4518	
	Toshiba	TC4518	
MC14519	Hitachi	HD14519	
		HD4519	
	National	CD4519	
	RCA	CD4519	
	Signetics	HEF4519	
MC14520	Fairchild	F4520	
	Hitachi	HD14520	
	National	CD4520	
	OKI	MSM4520	
	RCA	CD4520	
	Sanyo	LC4520	
	SGS	HCF4520	
	Signetics	HEF4520	
	SSS	SCL4520	
	Solitron	CM4520	
	Toshiba	TC4520	
MC14521	Fairchild	F4521	
	RCA	CD4045	
	SGS	HCF4045	
	Signetics	HEF4521	
	SSS	SCL4445	
	Solitron	CM4045	
	Toshiba	TC4521	
MC1452100	**RCA**	**CD22100**	**840**
	SGS	M22100	
MC14522	Fairchild	F4522	
	Hitachi	HD14522	
	National	CD4522	
	RCA	CD4522	
	Signetics	HEF4522	
	SSS	SCL4522	
	Toshiba	TC4522	
MC14526	Fairchild	F4526	
	Hitachi	HD14526	
	National	CD4526	
	Signetics	HEF4526	
		(Continued)	

◆ Discontinued

Bold face device numbers indicate manufacturers data is provided in the IC Master on the pages noted.

© IC MASTER 1984

Motorola Semiconductor Products (Cont'd)

Manufacturer Device	Replacement Source	Device	IC Master Page
MC14526	SSS	SCL4526	
	Toshiba	TC4526	
MC14527	Fairchild	F4527	
	Hitachi	HD14527	
	National	CD4527	
	RCA	CD4527	
	SGS	HCF4527	
	Signetics	HEF4527	
	SSS	SCL4527	
	Toshiba	TC4527	
		TR4527	
MC14528	Fairchild	F4528	
	Hitachi	HD14528	
	National	CD4528	
		MM74C221	
	RCA	CD4098	
	SGS	HCF4098	
	Signetics	HEF4528	
	SSS	SCL4528	
	Toshiba	TC4528	
MC14531	Fairchild	F4531	
	Hitachi	HD14531	
	RCA	CD40101	
	SGS	HCF40101	
	Signetics	HEF4531	
	SSS	SCL4531	
	Toshiba	TC4531	
MC14532	Fairchild	F4532	
	Hitachi	HD14532	
	RCA	CD4532	
	SGS	HCF4532	
	Signetics	HEF4532	
	SSS	SCL4532	
	Toshiba	TC4532	
MC14533	Fairchild	F4553	
	Hitachi	HD14553	
	Motorola	MC14553	
MC14534	Hitachi	HD14534	
	Signetics	HEF4534	
MC14536	RCA	CD4536	
MC14538	National	CD4538	
	OKI	MSM4538	
	Signetics	HEF4538	
MC14539	Fairchild	F4539	
	Hitachi	HD14539	
	Signetics	HEF4539	
	Toshiba	TC4539	
MC14541B	**RCA**	**CD4541B**	839
	Signetics	HEF4591	
MC14543	Fairchild	F4543	
	Hitachi	HD14543	
	National	CD4543	
	RCA	CD4543	
	Signetics	HEF4543	
	Toshiba	TC4543	
MC14543B	RCA	CD4543B	
MC1455	Cherry	CS555	
	Exar	XR555	
	Fairchild	μA555	
	Hitachi	HA17555	
	National	LM555	
	NEC	μPC1555	
	Raytheon	RC555	
	RCA	CA355	
		CA555	3604
	Sanyo	LB8555	
	Signetics	NE555	
	SiliconG	SG555	
	TI	NE555	
MC14553	Fairchild	F4553	
	Hitachi	HD14553	
	Motorola	MC14533	
MC14555	Fairchild	F4555	
	Hitachi	HD14555	
	RCA	CD4555	
	SGS	HCF4555	
	Signetics	HEF4555	
	SSS	SCL4555	
	Toshiba	TC4555	
MC14556	Fairchild	F4556	
	RCA	CD4556	
	SGS	HCF4556	
	Signetics	HEF4556	
	SSS	SCL4556	
	Toshiba	TC4556	
MC14557	Fairchild	F4557	
	Hitachi	HD14557	
	Signetics	HEF4557	
MC14558	Hitachi	HD14558	
	RCA	CD4055	
MC1456	**Datel**	**AM-460-2**	2864
	Harris	HA-2605	
	Intersil	HA2605	
	SiliconG	SG1456	
	TI	MC1456	
MC14560	Hitachi	HD14560	
	Toshiba	TC4560	
MC14561	Hitachi	HD14561	
	Toshiba	TC4561	
MC14566	Hitachi	HD14566	
MC14568	Hitachi	HD14568	
MC14569	Hitachi	HD14569	
	RCA	CD4059	
	Signetics	HEF4059	
MC14572	Hitachi	HD14572	
	Toshiba	TC4572	
MC1458	AMD	AM1458	
	Exar	XR1458	
		XR4558	
	Fairchild	μA1458	
	Harris	HA-2655	
	Hitachi	HA17458	
	MicroPwr	MPOP14	
	Motorola	MC4558C	
		RC4558	
	National	LM1458	
	NEC	μPC1458	
		μPC4558	
	PMI	PM1458	
	Raytheon	RC1458	
		RC4558	3592
	RCA	CA1458	
		LM1458	
		RC4558	
		SSS1458	
	Sanyo	LA6458A	
	Signetics	MC1458	
		NE4558	
	SiliconG	SG1458	
	TI	MC1458	
		RC4558	
MC14580	Hitachi	HD14580	
	RCA	CD40108	
MC14581	Hitachi	HD14581	
	RCA	CD40181	
		CD4057	
	SGS	HCF40181	
	SSS	SCL4581	
MC14582	Fairchild	F4582	
	Hitachi	HD14582	
	RCA	CD40182	
	SGS	HCF40182	
	SSS	SCL4582	
MC14583	Fairchild	F4583	
	Hitachi	HD14583	
	Toshiba	TC4583	
MC14584	Fairchild	F40014	
	Hitachi	HD14584	
	National	CD40106	
		CD4584	
		MM54C14	
		MM74C14	
	RCA	CD40106	
	SGS	HCF40106	
	Signetics	**HEF40106**	865
	SSS	SCL4584	
MC14585	Fairchild	F40085	
	Hitachi	HD14585	
	National	MM74C85	
	RCA	CD4585	
	Signetics	HEF4585	
	SSS	SCL4585	
	Toshiba	TC4585	
MC1463	Toshiba	TA7085	
MC1468	Exar	XR1468	
		XR4195	
	Raytheon	RC4195	
	SiliconG	SG1468	
		SG2501A	
		SG3501A	
		SG4501	
MC1471	Sprague	UDN-5711	
	TI	SN75476	
		UDN5711	
MC1472	Sprague	UDN-5712	
		UDN-5722	
	TI	SN75475	
		SN75477	
		UDN5712	
MC1473	Sprague	UDN-5713	
	TI	SN75478	
		UDN5713	
MC1474	Sprague	UDN-5714	
	TI	SN75479	
		UDN5714	
MC1488	AMD	MC1488	
	Exar	**XR1488**	3384
	Fairchild	μA1488	
	Hitachi	HD75188	
	National	DS1488	
	Raytheon	RM1488	
	Signetics	MC1488	
	SiliconG	SG1488	
	TI	MC1488	
		SN75188	
MC1489	AMD	MC1489	
	Exar	XR1489	
	Fairchild	μA1489	
	Hitachi	HD75189	
	National	DS1489	
	Signetics	MC1489	
	SiliconG	SG1489	
	TI	SN75189	
		SN85189	
MC1489A	**Exar**	**XR1489A**	3384
	Fairchild	μA1489A	
	National	DS1489A	
	Signetics	MC1489A	
	SiliconG	SG1489A	
	TI	MC1489A	
		SN75189A	
MC1495	SiliconG	SG1495	
MC1496	Fairchild	μA796	
	National	LM1496	
	Plessey	SL1496	
	Signetics	MC1496	
	SiliconG	SG1496	
MC14XXX	Fairchild	34XXX	
		F4XXX	
	Hitachi	HD14XXX	
	National	CD4XXX	
	OKI	MSM4XXX	
	RCA	CD4XXX	
	SGS	HCF4XXX	
	SSS	SCL4XXX	
	Solitron	CM4XXX	
	TI	TP4000 series	
	Toshiba	TC4XXX	
MC1500AU10	PMI	REF-01AZ	
MC1500AU5	PMI	REF-02AZ	
MC1504-10	HybridSys	HSREF01	
	MicroPwr	**MP5532**	3529
		REF-01	
	Motorola	**MC1404-10**	3535
	PMI	REF-01	
	Raytheon	**REF-01**	3584
	TeledyneS	9496	
MC1508	**Datel**	**DAC-IC8BM**	2863
	PMI	DAC-1508	
	Signetics	MC1508	
		SE5008	
		SE5009	
MC1514	National	LM1514	
	TI	TL514	
MC1536	**Datel**	**AM-464-2M**	2864
	Exar	**XR1527A**	3381
	Harris	**HA-2640**	3412
	National	LM143	
		LM1536	
	SiliconG	SG1536	
MC1537	Raytheon	RM1537	
MC1555	Exar	XR555M	
	Raytheon	RM555	
	Signetics	**SE555**	526
	TI	SE555	
MC1556	**Harris**	**HA-2600**	3406
	Intersil	HA2600	
	SiliconG	SG1556	
	TeledyneP	1326	
	TI	MC1556	
MC1558	AMD	AM1558	
	Exar	XR1558	
	Fairchild	μA1558	
	Harris	**HA-2650**	3414
	Motorola	MC4558	
		RC1558	
	National	LM1558	
	PMI	**OP-14**	3566
		PM1558	
	Raytheon	RC1558	
		RM1558	
		(Continued)	
MC1558	Raytheon	RM4558	
	RCA	CA1558	
		LM1558	
		SSS1558	
	Signetics	MC1558	
	SiliconG	SG1558	
	TI	MC1558	
		RM4558	
MC1568	Exar	XR1568	
	Raytheon	RM4195	
	SiliconG	SG1501A	
		SG1568	
MC1590	National	LM3011	
	RCA	CA3011	
		CA3012	
MC1595	SiliconG	SG1595	
MC1596	National	LM1596	
	Plessey	SL1596	
	Signetics	MC1596	
	SiliconG	SG1596	
MC1648	Plessey	SP1648	
MC1650	Plessey	SP1650	
MC1651	Plessey	SP1651	
MC1658	Fairchild	11C58	
	Plessey	SP1658	
MC1660	Plessey	SP1660	
MC1662	Plessey	SP1662	
MC1664	Plessey	SP1664	
MC1666	Plessey	SP1666	
MC1668	Plessey	SP1668	
MC1670	Fairchild	11C70	
	Plessey	SP1670	
◆MC1671	Plessey	SP1671	
MC1672	Plessey	SP1672	
MC1674	Plessey	SP1674	
MC1688	Fairchild	11C01	
MC1690	Fairchild	11C06	
MC1692	Plessey	SP1692	
MC1699	Fairchild	11C05	
	Plessey	SP8610	
		SP8616	
MC1709	Fairchild	μA709	
	Hitachi	HA1303	
	National	LM1709	
		LM709	
	NEC	μPC255	
		μPC55	
	Raytheon	RC709	
		RM709	
	RCA	CA3038	
	TI	μA709	
	Thomson-CSF	SFC2709	
	Toshiba	TA7502	
MC1710	Fairchild	μA710	
	Motorola	LM710	
	National	LM710	
	PMI	CMP-01	
		CMP-02	
	SiliconG	SG710	
	TI	μA710	
	Thomson-CSF	SFC2710	
MC1711	Fairchild	μA711	
	National	LM711	
	SiliconG	SG711	
	TI	μA711	
	Thomson-CSF	SFC2711	
MC1712	NEC	μPC51	
MC1723	Fairchild	μA723	
	Hitachi	HA17723	
	Intersil	LM723	
	National	LM723	
	Raytheon	RC723	
		RM723	
	RCA	**CA723**	3602
		LM723	
	SGS	L123	
	Signetics	μA723	
	SiliconG	SG723	
	TI	μA723	
	Thomson-CSF	SFC2723	
MC1733	Fairchild	μA733	
	Hitachi	HA17733	
	Intersil	μA733	
	Motorola	NE592	
	National	LM733	
	Signetics	μA733	
	SiliconG	SG733	
	TI	μA733	

◆ Discontinued

The manufacturers report their devices can be used as direct replacements.
Performance details often differ, so compare the specifications considering your requirements.

Motorola Semiconductor Products (Cont'd)

Manufacturer Device	Replacement Source	Device	IC Master Page
MC1741	**AD**	**AD741**	**3351**
	Fairchild	3871	
		μA741	
	Hitachi	HA17741	
	Intersil	AD741	
		ICL741	
	MicroPwr	MP5501	
		MP5502	**3529**
		OP-02	**3529**
	Mostek	MK3871	
	Motorola	LM741	
	National	LM741	
	NEC	μPC151	
		μPC741	
	PMI	OP-01	
		OP-02	**3566**
		PM741	
		SSS741	
	Raytheon	RC741	
		RM741	
	RCA	CA3056	
		CA741	
	Signetics	μA741	
	SiliconG	SG300	
		SG741	
	TI	μA741	
	Thomson-CSF		
		SFC2741	
	Toshiba	TA7504	
MC1747	AMD	747	
	Fairchild	μA747	
	Hitachi	HA17747	
	MicroPwr	MPOP04	
	National	LM747	
	NEC	μPC251	
	PMI	**OP-04**	**3566**
		PM747	
	Raytheon	RC747	
		RM747	
	RCA	CA747	
	Signetics	μA747	
	SiliconG	SG747	
	TeledyneS	747	
	TI	μA747	
MC1748	AMD	LM201	
	AD	AD201	
	Fairchild	μA201	
		μA748	
	Intersil	LM748	
		μA748	
	Motorola	LM201	
	National	LM201	
		LM748	
	Plessey	SL748	
	RCA	CA201	
		CA748	
		LM748	
	SiliconG	SG201	
		SG748	
	TI	LM201	
		SN72748P	
		μA748	
	Thomson-CSF		
		SFC2201	
		SFC2748	
MC1776	Fairchild	μA776	
	Harris	**HA-2720**	**3416**
	Intersil	ICL8021	
		LM4250	
	National	LM4250	
	SiliconG	SG4250	
	Solitron	UC4250	
MC2257	Nitron	NC2257	
MC2259	Nitron	NC2259	
MC2260	Nitron	NC2260	
MC2652	AMI	S6852	
	Fairchild	**F6852**	**1464**
	Hitachi	HD6852	
		HD68A52	
	Motorola	**MC6852**	**1505**
		MC68652	
			1506,1511
	SSS	SND5025	
	SMC	COM5025	
	Thomson-CSF		
		EF6852	
MC2653	**Motorola**	**MC68653**	
			1506,1512
	Signetics	**SCN2653**	**1671**
MC2661	**Motorola**	**MC68661**	
			1506,1512
	Signetics	SCN2661	
	SMC	COM2661	
	Synertek	**SY2661**	**1696**
MC2681	Signetics	2681	
MC2682	Signetics	2682	
MC27A08	AMD	AM2708	
	Hitachi	HN462708	
	Motorola	MCM2708	
	National	MM2708	
	Panasonic	MN2708	
	Rockwell	2708	
	TI	TMS2708	
MC2903	Fairchild	F2903	
MC2910	AMD	AM2910	
	Fairchild	29F10	
		F2910	
MC3106	Fairchild	54H11	
	National	DM54H11	
	TI	**SN54H11**	**923**
MC3242A	Intel	3242	
MC3245	Intel	3245	
	National	DS3245	
MC3301	Hitachi	HA17301	
	Motorola	LM2900	
	National	LM2900	
		LM3301	
	Raytheon	LM2900	
		RC3301	
	TI	LM2900	
MC3302	Fairchild	μA2901	
		μA3302	
	Motorola	LM2901	
	National	LM2901	
		LM3302	
	NEC	μPC2901	
	PMI	CMP-04	
	Raytheon	LM2901	
		RC3302	
	RCA	CA3302	
	Signetics	LM2901	
		MC3302	
	SiliconG	SG3302	
	TI	LM2901	
		LM3302	
MC3303	Fairchild	μA3303	
	Signetics	MC3303	
	TI	MC3303	
MC3346	Fairchild	μA3046	
	National	LM3046	
	Plessey	SL3046	
		SL3146	
	RCA	**CA3046**	**3601**
		CA3146	**3601**
	Sanyo	LA3046	
	SiliconG	SG3046	
		SG3146	
		SG3821	
	Sprague	ULN-2046	
MC3357	MicroPwr	MP5071	
MC3386	Fairchild	μA3086	
	National	LM3086	
	Plessey	SL3086	
	RCA	**CA3086**	**3601**
	Sanyo	LA3086	
	SiliconG	SG3086	
		SG3886	
	Sprague	ULN-2086	
MC34001	TI	TL081C	
MC34001A	TI	LL081BC	
MC34001B	TI	TL081AC	
MC34002	TI	TL082C	
MC34002A	TI	TL082BC	
MC34002B	TI	TL082AC	
MC34004	Exar	XR074	
	Harris	LF347	
	National	LF347	
	TI	TL074	
		TL084C	
	Thomson-CSF		
		TDB0084	
		TDB0084A	
		TDB0347	
MC34004A	TI	TL084BC	
MC34004B	TI	TL084AC	
MC3401	National	LM3401	
		LM3900	
	Raytheon	LM3900	
		RC3401	
	RCA	CA3401	
	TI	LM3900	
MC3403	AMD	LM324	
	Exar	**XR3403**	**3378**
		XR3403C	
	Fairchild	μA324	
		μA3403	
	Motorola	LM324	
	National	LM324	
	NEC	μPC324	
	Raytheon	LM324	
		RC3403	
		RC4137	
	RCA	CA324	
		LM324	
	Sanyo	LA6324	
	Signetics	LM324	
		MC3403	
	SiliconG	SG324	
	TI	LM324	
		MC3403	
	Thomson-CSF		
		TDB0124	
MC3410	Signetics	MC3410	
MC3412	**AD**	**AD565J**	**2826,2828**
MC3416	Raytheon	RC4444	
MC3420	MicroPwr	MP5078	
	Motorola	**MC3520**	**3533**
MC3423	SiliconG	SG3423	
	TI	MC3423	
MC3430	Motorola	MC3441	
	National	DS3651	
MC3432	National	DS3653	
MC3437	National	DS8837	
	Signetics	**N8T37**	**876**
MC3438	National	DS8838	
	Signetics	**N8T38**	**876**
MC3441	Motorola	MC3430	
	National	DS3651	
MC3446	**Motorola**	**MC3446A**	**3064**
	TI	MC3446	
MC3446A	Motorola	MC3446	
	TI	MC3446	
MC3448A	Fairchild	μA3448A	
MC3450	National	DS3650	
MC3452	National	DS3652	
MC3456	AMD	LM556	
	Exar	XR556	
		XR556M	
	Fairchild	μA556	
	Motorola	MC3556	
	National	LM556	
	Raytheon	RC556	
		RM556	
	Signetics	NE556	
		SE556	**526**
	SiliconG	SG556	
	TI	NE556	
		SE556	
MC3458	Fairchild	μA798	
	Motorola	MC3558	
MC3460	National	DS3674	
MC3461	Hitachi	HD103461	
MC3470	Exar	XR3470	
MC3481	TI	SN75126	
MC3485	TI	SN75126	
MC3486	National	DS3486	
	TI	MC3486	
MC3487	National	DS3487	
		DS3687	
	TI	MC3487	
MC3488	Fairchild	9636A	
	TI	9636	
		9636A	
MC3491	National	DS8889	
MC35001B	TI	TL081M	
MC35002B	TI	TL082M	
MC35004	TI	TL084M	
MC3503	**Exar**	**XR3503**	**3378**
	Raytheon	RC3503	
		RM3503	
		RM4137	
	Signetics	MC3503	
	SiliconG	SG3503	
	TI	MC3503	
MC3510	Signetics	MC3510	
		NE5410	**3612**
MC3512	**AD**	**AD565S**	**2826,2828**
MC3520	MicroPwr	MP5078	
	Motorola	**MC3420**	**3533**
MC3523	SiliconG	SG3523	
	TI	MC3523	
MC3556	AMD	LM556	
	Exar	XR556	
MC3556	Exar	XR556M	
	Fairchild	μA556	
	Motorola	MC3456	
	National	LM556	
	Raytheon	RC556	
		RM556	
	Signetics	NE556	
		SE556	**526**
	SiliconG	SG556	
	TI	NE556	
		SE556	
MC3558	Fairchild	μA798	
	Motorola	MC3458	
MC4002	Fairchild	7488	
	National	DM7488	
	Signetics	7488	
		N8224	
	TI	SN7488	
		SN7488A	
MC40175	RCA	CD40175	
MC4024	Fairchild	11C24	
	Motorola	MC4324	
MC4044	Fairchild	11C44	
	Motorola	MC4344	
MC4064	AMD	31L01	
		AM27LS02	
		AM27S02	
		AM3101	
		AM3101A	
		SN7489-1	
	Fairchild	74S289	
	Intel	3101	
	National	DM7589	
	NEC	μPB2089	
		μPB2289	
	Signetics	3101	
		3101A	
		7489	
		N8225	
		S3101	
	TI	**SN7489**	**951**
MC4256	AMD	AM27LS00	
	Fairchild	93421	
		93L420	
		93L421	
	Intel	3106	
	National	93L420	
		93L421	
		DM74S200	
	NEC	μPB2200	
	Signetics	74200	
		N82S116	
		N82S16	
	TI	SN74LS200	
		SN74S200	
		SN74S201	**993**
MC4324	Fairchild	11C24	
	Motorola	MC4024	
MC4344	Fairchild	11C44	
	Motorola	MC4044	
MC4558	AMD	AM1558	
	Exar	XR1558	
	Fairchild	μA1558	
	Harris	**HA-2650**	**3414**
	Motorola	MC1558	
		RC1558	
	National	LM1558	
	PMI	**OP-14**	**3566**
		PM1558	
	Raytheon	RC1558	
		RM1558	
		RM4558	
	RCA	CA1558	
		LM1558	
		SSS1558	
	Signetics	MC1558	
	SiliconG	SG1558	
	TI	MC1558	
		RM4558	
MC4558C	AMD	AM1458	
	Exar	XR1458	
		XR4558	
	Fairchild	μA1458	
	Harris	HA-2655	
	Hitachi	HA17458	
	MicroPwr	MPOP14	
	Motorola	MC1458	
		RC4558	
	National	LM1458	
	NEC	μPC1458	
		μPC4558	
	PMI	PM1458	

(Continued)

◆ Discontinued

Bold face device numbers indicate manufacturers data is provided in the IC Master on the pages noted.

© IC MASTER 1984

Motorola Semiconductor Products (Cont'd)

Manufacturer Device	Replacement Source	Device	IC Master Page
MC4558C	Raytheon	RC1458	
		RC4558	**3592**
	RCA	CA1458	
		LM1458	
		RC4558	
		SSS1458	
	Sanyo	LA6458A	
	Signetics	MC1458	
		NE4558	
	SiliconG	SG1458	
	TI	MC1458	
		RC4558	
MC4741	AMD	LM348	
	Exar	**XR4212**	**3378**
	Fairchild	μA348	
	Harris	HA-4741	
	MicroPwr	MP5511	
	National	LM348	
	NEC	μPC4741	
	PMI	OP-11	
	Raytheon	HA4741	
		LM348	
		RC4156	
	TI	LM348	
	Thomson-CSF		
		TDB0111	
		TDB0148	
MC54107	Fairchild	54107	
	National	DM54107	
	TI	**SN54107**	**957**
MC54F00	Fairchild	54F00	
	Signetics	54F00	
MC54F02	Fairchild	54F02	
	Signetics	54F02	
MC54F04	Fairchild	54F04	
	Signetics	54F04	
MC54F08	Fairchild	54F08	
	Signetics	54F08	
MC54F10	Fairchild	54F10	
	Signetics	54F10	
MC54F109	Fairchild	54F109	
	Signetics	54F109	
MC54F11	Fairchild	54F11	
	Signetics	54F11	
MC54F138	Fairchild	54F138	
	Signetics	54F138	
MC54F139	Fairchild	54F139	
	Signetics	54F139	
MC54F20	Fairchild	54F20	
	Signetics	54F20	
MC54F240	**Fairchild**	**54F240**	**729**
	Signetics	**54F240**	**881**
MC54F241	**Fairchild**	**54F241**	**729**
	Signetics	**54F241**	**881**
MC54F242	Fairchild	54F242	
	Signetics	54F242	
MC54F243	Fairchild	54F243	
	Signetics	54F243	
MC54F244	**Fairchild**	**54F244**	**729**
	Signetics	**54F244**	**882**
MC54F32	Fairchild	54F32	
	Signetics	54F32	
MC54F333	Fairchild	54F333	
	Signetics	54F333	
MC54F373	**Fairchild**	**54F373**	**734**
	Signetics	**54F373**	**886**
MC54F374	**Fairchild**	**54F374**	**736**
	Signetics	**54F374**	**886**
MC54F534	Fairchild	54F534	
	Signetics	54F534	
MC54F74	Fairchild	54F74	
	Signetics	54F74	
MC54HC00	National	MM54HC00	
	RCA	**CD54HC00**	**842**
	Signetics	PCF54HC00	
MC54HC02	National	MM54HC02	
	RCA	**CD54HC02**	**842**
	Signetics	PCF54HC02	
MC54HC04	National	MM54HC04	
	RCA	**CD54HC04**	**842**
	Signetics	PCF54HC04	
MC54HC08	National	MM54HC08	
	RCA	**CD54HC08**	**842**
	Signetics	PCF54HC08	
MC54HC10	National	MM54HC10	
	RCA	**CD54HC10**	**842**
	Signetics	PCF54HC10	
MC54HC107	National	MM54HC107	
	RCA	**CD54HC107**	**842**
	Signetics	PCF54HC107	
MC54HC109	National	MM54HC109	
	RCA	**CD54HC109**	**842**
	Signetics	PCF54HC109	
MC54HC11	National	MM54HC11	
	RCA	**CD54HC11**	**842**
	Signetics	PCF54HC11	
MC54HC112	National	MM54HC112	
	RCA	**CD54HC112**	**842**
	Signetics	PCF54HC112	
MC54HC123	National	MM54HC123	
	RCA	**CD54HC123**	**842**
	Signetics	PCF54HC123	
MC54HC132	National	MM54HC132	
	~~**RCA**~~	~~**CD54HC132**~~	~~**842**~~
	Signetics	PCF54HC132	
MC54HC133	National	MM54HC133	
	RCA	CD54HC133	
	Signetics	PCF54HC133	
MC54HC138	National	MM54HC138	
	RCA	**CD54HC138**	**842**
	Signetics	PCF54HC138	
MC54HC139	National	MM54HC139	
	RCA	**CD54HC139**	**842**
	Signetics	PCF54HC139	
MC54HC14	National	MM54HC14	
	RCA	**CD54HC14**	**842**
	Signetics	PCF54HC14	
MC54HC147	National	MM54HC147	
	RCA	**CD54HC147**	**842**
	Signetics	PCF54HC147	
MC54HC151	National	MM54HC151	
	RCA	**CD54HC151**	**842**
	Signetics	PCF54HC151	
MC54HC153	National	MM54HC153	
	RCA	**CD54HC153**	**842**
	Signetics	PCF54HC153	
MC54HC154	National	MM54HC154	
	RCA	**CD54HC154**	**842**
	Signetics	PCF54HC154	
MC54HC157	**RCA**	**CD54HC157**	**842**
	Signetics	PCF54HC157	
MC54HC158	National	MM54HC158	
	RCA	**CD54HC158**	**842**
	Signetics	PCF54HC158	
MC54HC160	National	MM54HC160	
	RCA	**CD54HC160**	**842**
	Signetics	PCF54HC160	
MC54HC161	National	MM54HC161	
	RCA	**CD54HC161**	**842**
	Signetics	PCF54HC161	
MC54HC162	National	MM54HC162	
	RCA	**CD54HC162**	**842**
	Signetics	PCF54HC162	
MC54HC163	National	MM54HC163	
	RCA	**CD54HC163**	**842**
	Signetics	PCF54HC163	
MC54HC164	National	MM54HC164	
	RCA	**CD54HC164**	**842**
	Signetics	PCF54HC164	
MC54HC165	National	MM54HC165	
	RCA	**CD54HC165**	**842**
	Signetics	PCF54HC165	
MC54HC173	National	MM54HC173	
	RCA	**CD54HC173**	**842**
	Signetics	PCF54HC173	
MC54HC174	National	MM54HC174	
	RCA	**CD54HC174**	**842**
	Signetics	PCF54HC174	
MC54HC175	National	MM54HC175	
	RCA	**CD54HC175**	**842**
	Signetics	PCF54HC175	
MC54HC192	National	MM54HC192	
	RCA	**CD54HC192**	**842**
	Signetics	PCF54HC192	
MC54HC193	National	MM54HC193	
	RCA	**CD54HC193**	**842**
	Signetics	PCF54HC193	
MC54HC194	National	MM54HC194	
	RCA	**CD54HC194**	**842**
	Signetics	PCF54HC194	
MC54HC195	National	MM54HC195	
	RCA	**CD54HC195**	**842**
	Signetics	PCF54HC195	
MC54HC20	National	MM54HC20	
	RCA	**CD54HC20**	**842**
	Signetics	PCF54HC20	
MC54HC221	National	MM54HC221	
	RCA	**CD54HC221**	**842**
	Signetics	PCF54HC221	
MC54HC240	National	MM54HC240	
	RCA	**CD54HC240**	**842**
	Signetics	PCF54HC240	
MC54HC241	National	MM54HC241	
	RCA	**CD54HC241**	**842**
	Signetics	PCF54HC241	
MC54HC242	National	MM54HC242	
	RCA	**CD54HC242**	**842**
	Signetics	PCF54HC242	
MC54HC243	National	MM54HC243	
	RCA	**CD54HC243**	**842**
	Signetics	PCF54HC243	
MC54HC244	National	MM54HC244	
	RCA	**CD54HC244**	**842**
	Signetics	PCF54HC244	
MC54HC245	National	MM54HC245	
	~~**RCA**~~	~~**CD54HC245**~~	~~**842**~~
	Signetics	PCF54HC245	
MC54HC251	National	MM54HC251	
	RCA	**CD54HC251**	**842**
	Signetics	PCF54HC251	
MC54HC253	National	MM54HC253	
	RCA	**CD54HC253**	**842**
	Signetics	PCF54HC253	
MC54HC257	National	MM54HC257	
	RCA	**CD54HC257**	**842**
	Signetics	PCF54HC257	
MC54HC259	National	MM54HC259	
	RCA	**CD54HC259**	**842**
	Signetics	PCF54HC259	
MC54HC266	National	MM54HC266	
	RCA	CD54HC266	
	Signetics	PCF54HC266	
MC54HC27	National	MM54HC27	
	RCA	**CD54HC27**	**842**
	Signetics	PCF54HC27	
MC54HC273	**RCA**	**CD54HC273**	**842**
	Signetics	PCF54HC273	
MC54HC280	National	MM54HC280	
	RCA	**CD54HC280**	**842**
	Signetics	PCF54HC280	
MC54HC299	National	MM54HC299	
	~~**RCA**~~	~~**CD54HC299**~~	~~**842**~~
	Signetics	PCF54HC299	
MC54HC30	National	MM54HC30	
	RCA	CD54HC30	
	Signetics	PCF54HC30	
MC54HC32	National	MM54HC32	
	RCA	**CD54HC32**	**842**
	Signetics	PCF54HC32	
MC54HC354	National	MM54HC354	
	RCA	**CD54HC354**	**842**
	Signetics	PCF54HC354	
MC54HC356	National	MM54HC356	
	RCA	**CD54HC356**	**842**
	Signetics	PCF54HC356	
MC54HC365	National	MM54HC365	
	RCA	**CD54HC365**	**842**
	Signetics	PCF54HC365	
MC54HC366	National	MM54HC366	
	RCA	**CD54HC366**	**842**
	Signetics	PCF54HC366	
MC54HC367	National	MM54HC367	
	RCA	**CD54HC367**	**842**
	Signetics	PCF54HC367	
MC54HC368	National	MM54HC368	
	RCA	**CD54HC368**	**842**
	Signetics	PCF54HC368	
MC54HC373	National	MM54HC373	
	RCA	**CD54HC373**	**842**
	Signetics	PCF54HC373	
MC54HC374	National	MM54HC374	
	RCA	**CD54HC374**	**842**
	Signetics	PCF54HC374	
MC54HC390	National	MM54HC390	
	RCA	**CD54HC390**	**843**
	Signetics	PCF54HC390	
MC54HC393	National	MM54GC393	
	RCA	CD54HG393	
	Signetics	PCF54HC393	
MC54HC4002	National	MM54HC4002	
	RCA	**CD54HC4002**	**843**
	Signetics	PCF54HC4002	
MC54HC4017	National	MM54HC4017	
	RCA	**CD54HC4017**	**843**
	Signetics	PCF54HC4017	
MC54HC4020	National	MM54HC4020	
	RCA	**CD54HC4020**	**843**
	Signetics	PCF54HC4020	
MC54HC4024	**RCA**	**CD54HC4024**	**843**
	Signetics	PCF54HC4024	
MC54HC4040	National	MM54HC4040	
	RCA	**CD54HC4040**	**843**
	Signetics	PCF54HC4040	
MC54HC4049	National	MM54HC4049	
	RCA	**CD54HC4049**	**843**
	Signetics	PCF54HC4049	
MC54HC4050	National	MM54HC4050	
	RCA	**CD54HC4050**	**843**
	Signetics	PCF54HC4050	
MC54HC4051	**RCA**	**CD54HC4051**	**843**
	Signetics	PCF54HC4051	
MC54HC4052	**RCA**	**CD54HC4052**	**843**
	Signetics	PCF54HC4052	
MC54HC4053	**RCA**	**CD54HC4053**	**843**
	Signetics	PCF54HC4053	
MC54HC4060	National	MM54HC4060	
	~~**RCA**~~	~~**CD54HC4060**~~	~~**843**~~
	Signetics	PCF54HC4060	
MC54HC4075	National	MM54HC4075	
MC54HC4078	National	MM54HC4078	
MC54HC42	National	MM54HC42	
	RCA	**CD54HC42**	**842**
	Signetics	PCF54HC42	
MC54HC4511	National	MM54HC4511	
	RCA	**CD54HC4511**	**843**
	Signetics	PCF54HC4511	
MC54HC4514	National	MM54HC4514	
	RCA	**CD54HC4514**	**843**
	Signetics	PCF54HC4514	
MC54HC4538	National	MM54HC4538	
	RCA	**CD54HC4538**	**843**
	Signetics	PCF54HC4538	
MC54HC533	National	MM54HC533	
	RCA	**CD54HC533**	**843**
	Signetics	PCF54HC533	
MC54HC534	National	MM54HC534	
	RCA	**CD54HC534**	**843**
	Signetics	PCF54HC534	
MC54HC573	National	MM54HC573	
	RCA	**CD54HC573**	**843**
	Signetics	PCF54HC573	
MC54HC574	National	MM54HC574	
	RCA	**CD54HC574**	**843**
	Signetics	PCF54HC574	
MC54HC640	National	MM54HC640	
	RCA	**CD54HC640**	**843**
	Signetics	PCF54HC640	
MC54HC643	National	MM54HC643	
	RCA	**CD54HC643**	**843**
	Signetics	PCF54HC643	
MC54HC645	National	MM54HC645	
	RCA	CD54HC645	
	Signetics	PCF54HC645	
MC54HC646	National	MM54HC646	
	RCA	**CD54HC646**	**843**
	Signetics	PCF54HC646	
MC54HC648	National	MM54HC648	
	RCA	**CD54HC648**	**843**
	Signetics	PCF54HC648	
MC54HC688	National	MM54HC688	
	RCA	**CD54HC688**	**843**
	Signetics	PCF54HC688	
MC54HC73	National	MM54HC73	
	RCA	**CD54HC73**	**842**
	Signetics	PCF54HC73	
MC54HC74	National	MM54HC74	
	RCA	**CD54HC74**	**842**
	Signetics	PCF54HC74	
MC54HC75	National	MM54HC75	
	RCA	**CD54HC75**	**842**
	Signetics	PCF54HC75	
MC54HC76	National	MM54HC76	
	RCA	CD54HC76	
	Signetics	PCF54HC76	
MC54HC85	National	MM54HC85	
	RCA	**CD54HC85**	**842**
	Signetics	PCF54HC85	
MC54HC86	National	MM54HC86	
	RCA	**CD54HC86**	**842**
	Signetics	PCF54HC86	
MC54HCT138	RCA	CD54HCT138	
	Signetics	PCF54HCT138	
MC54HCT240	RCA	CD54HCT240	
MC54HCT241	RCA	CD54HCT241	
	Signetics	PCF54HCT241	
MC54HCT244	RCA	CD54HCT244	
	Signetics	PCF54HCT244	
MC54HCT245	RCA	CD54HCT245	
	Signetics	PCF54HCT245	
MC54HCT373	RCA	CD54HCT373	
	Signetics	PCF54HCT373	
MC54HCT374	RCA	CD54HCT374	

◆ Discontinued

The manufacturers report their devices can be used as direct replacements.
Performance details often differ, so compare the specifications considering your requirements.

Motorola Semiconductor Products (Cont'd)

Manufacturer Device	Replacement Source	Device	IC Master Page
MC54HCT533	RCA	CD54HCT533	
	Signetics	PCF54HCT533	
MC54HCT534	RCA	CD54HCT534	
MC54HCT640	RCA	CD54HCT640	
	Signetics	PCF54HCT640	
MC54HCT643	RCA	CD54HCT643	
	Signetics	PCF54HCT643	
MC54HCU04	RCA	CD54HCU04	
	Signetics	PCF54HCU04	
MC55107	Fairchild	55107	
	National	DS55107	
		LM55107A	
	TI	SN55107	
		SN55107B	
MC55108	Fairchild	55108	
	National	DS55108	
		LM55108A	
	TI	SN55108	
		SN55108B	
MC5522	Motorola	MC5523	
	National	LM5522	
	SiliconG	SG5522	
	TI	SN5522	
MC5523	Motorola	MC5522	
	National	LM5522	
	SiliconG	SG5522	
	TI	SN5522	
MC5524	Fairchild	MC5524	
	National	LM5524	
	Raytheon	RM5524	
	SiliconG	SG5524	
	TI	SN5524	
MC5525	Fairchild	MC5525	
	National	LM5525	
	SiliconG	SG5525	
MC5528	Fairchild	MC5528	
	National	LM5528	
	SiliconG	SG5528	
	TI	SN5528	
MC5529	Fairchild	MC5529	
	National	LM5529	
	SiliconG	SG5529	
MC55325	Fairchild	MC55325	
	National	DS55325	
		LM55325	
	Signetics	55325	
	SiliconG	SG55325	
	TI	SN55325	
MC5534	Fairchild	MC5534	
	National	LM5534	
	SiliconG	SG5534	
MC5535	National	LM5535	
	SiliconG	SG5535	
	TI	SN5535	
MC5539	National	LM5539	
	SiliconG	SG5539	
MC6800	Fairchild	F6800A	
	Hitachi	HD6800	
		HD68A00	
		HD68B00	
	Thomson-CSF	EF6800	
MC68000	Hitachi	HD68000	
	Mostek	MK68000	
	Rockwell	R68000	
	Signetics	**SCN68000**	**1689,1690**
	Thomson-CSF	EF68000	
MC68008	Mostek	MK68008	
MC6801	**AMI**	**S6801**	**1450**
	Hitachi	HD6801	
MC68010	Mostek	MK68010	
MC6802	AMI	S6802	
	Fairchild	**F6802**	**1461**
	Hitachi	HD6802	
	Thomson-CSF	EF6802	
MC6803	Hitachi	HD6803	
MC6805	**AMI**	**S6805**	**1451**
	Hitachi	HD6805	
	Thomson-CSF	EF6805	
MC6808	AMI	S6808	
	~~**Fairchild**~~	~~**F6808**~~	**1461**
	Hitachi	HD6808	
	Thomson-CSF	EF6808	
MC6809	**AMI**	**S6809**	**1448**
	Hitachi	HD6809	
		HD68A09	
		HD68B09	
	Thomson-CSF	EF6809	
MC6810	AMI	S6810	
	Fairchild	**F6810**	**1461**
	Hitachi	HD6810	
		HD68A10	
	Motorola	**MCM6810**	**1505,4046**
	Thomson-CSF	EF6810	
MC68120	Signetics	SCN68120	
MC68200	Mostek	MK68200	
MC6821	AMI	S6821	
	Fairchild	**F6821**	**1462**
	Hitachi	HD6821	
		HD68A21	
		HD68B21	
MC68230	Mostek	MK68230	
	Signetics	SCN68230	
MC68332	AMD	AM9232	
	AMI	S68322	
		S68A332	
	Fairchild	F3532	
	GI	R094132	
		T094132	
	GTEMicro	2332	
	Hitachi	HN46332	
	Intersil	IM7332	
	Motorola	MCM68332	
		MCM68A332	**4048**
	National	MM52132	
	NCR	2332	
		NCR2332	
	NEC	**μPD2332**	**4100**
	OKI	**MSM2932**	**4118**
	RCA	**CDM5333**	**1593**
	Rockwell	R2332	
	SiliconG	SG3532	
	SSS	SCM23C32	
	SMC	ROM4732	
	Synertek	**SY2332**	**4211**
	TI	**TMS4732**	**4226**
	Toshiba	TM2332	
		TMM333	
	Universal	UM2332	
	VTI	**VT2332**	**4249**
MC6840	AMI	S6840	
	Fairchild	**F6840**	**1462**
	Hitachi	HD46840	
		HD6840	
		HD68A40	
		HD68B40	
	Thomson-CSF	EF6840	
MC6843	Hitachi	HD6843	
MC6844	Hitachi	HD6844	
MC68440	Mostek	MK68440	
MC6845	Hitachi	HD6845	
	Rockwell	R6545	
MC68450	Hitachi	HD68450	
MC68451	Mostek	MK68451	
MC6846	AMI	S6846	
	Fairchild	**F6846**	**1463**
	Hitachi	HD46846	
		HD6846P	
MC68488	AMI	S68488	
	Fairchild	**F68488**	**1463**
MC6850	AMI	S1602	
	Fairchild	3730	
		F6850	**1463**
	Fujitsu	MB8868A	
	GI	AY3-1015	
	Hitachi	HD6850	
		HD68A50	
	National	MM5303	
	RCA	**CDP6402**	**1595**
	SMC	COM2017	
		COM2502H	
		COM8017	
	Thomson-CSF	EF6850	
	Western	TR1402	
		TR1602	
		TR1863	
MC6852	AMI	S6852	
	Fairchild	**F6852**	**1464**
	Hitachi	HD6852	
		HD68A52	
		(Continued)	
MC6852	**Motorola**	**MC2652**	**1511**
		MC68652	**1506,1511**
	SSS	SND5025	
	SMC	COM5025	
	Thomson-CSF	EF6852	
MC6854	AMI	S6854	
	Fairchild	**F6854**	**1464**
MC68564	Mostek	MK68564	
MC6860	Fairchild	F6860	
MC6862	Fairchild	F6862	
MC68652	AMI	S6852	
	Fairchild	**F6852**	**1464**
	Hitachi	HD6852	
		HD68A52	
	Motorola	**MC2652**	**1511**
		MC6852	**1505**
	SSS	SND5025	
	SMC	COM5025	
	Thomson-CSF	EF6852	
MC68653	**Motorola**	**MC2653**	**1512**
	Signetics	**SCN2653**	**1671**
MC68661	**Motorola**	**MC2661**	**1512**
	Signetics	SCN2661	
	SMC	COM2661	
	Synertek	**SY2661**	**1696**
~~MC68681~~	~~**Signetics**~~	~~**SCN68681**~~	~~**1694**~~
MC68682	Signetics	68682	
MC6880A	Hitachi	HD268T26	
	Motorola	MC8T26	
	Signetics	N8T26	
MC6885	Motorola	MC8T95	
	National	DM8095	
	Signetics	**N8T95**	**876**
	TI	SN74365	
MC6886	Motorola	MC8T96	
	National	DM8096	
	Signetics	**N8T96**	**876**
	TI	SN74366	
MC6887	Motorola	MC8T97	
	National	DM8097	
	Signetics	**N8T97**	**876**
	TI	SN74367	
MC6888	Motorola	MC8T98	
	National	DM8098	
		DS8674	
	Signetics	**N8T98**	**876**
	TI	SN74368	
MC68901	Mostek	MK68901	
MC68A00	AMI	S68A00	
MC68A10	AMI	S68A10	
MC68A21	AMI	S68A21	
MC68A50	AMI	S68A50	
MC68A54	AMI	S68A54	
MC68B00	AMI	S68B00	
MC68B10	AMI	S68B10	
MC68B21	AMI	S68B21	
MC68B50	AMI	S68B50	
MC68B54	AMI	S68B54	
MC74F00	Fairchild	74F00	
	Signetics	**74F00**	**879**
MC74F02	Fairchild	74F02	
	Signetics	**74F02**	**879**
MC74F04	Fairchild	74F04	
	Signetics	**74F04**	**879**
MC74F08	Fairchild	74F08	
	Signetics	**74F08**	**879**
MC74F10	Fairchild	74F10	
	Signetics	**74F10**	**879**
MC74F109	Fairchild	74F109	
	Signetics	**74F109**	**879**
MC74F11	Fairchild	74F11	
	Signetics	**74F11**	**879**
MC74F138	Fairchild	74F138	
	Signetics	**74F138**	**879**
MC74F139	Fairchild	74F139	
	Signetics	**74F139**	**879**
MC74F20	Fairchild	74F20	
	Signetics	**74F20**	**879**
MC74F240	**Fairchild**	**74F240**	**729**
	Signetics	**74F240**	**879,881**
MC74F241	**Fairchild**	**74F241**	**729**
	Signetics	**74F241**	**879,881**
MC74F242	Fairchild	74F242	
	Signetics	**74F242**	**879**
MC74F243	Fairchild	74F243	
	Signetics	**74F243**	**879**
MC74F244	**Fairchild**	**74F244**	**729**
	Signetics	**74F244**	**879,882**
MC74F2968	AMD	AM2968	
MC74F2969	AMD	AM2969	
MC74F2970	AMD	AM2970	
MC74F32	Fairchild	74F32	
	Signetics	**74F32**	**879**
MC74F373	**Fairchild**	**74F373**	**734**
	Signetics	**74F373**	**879,886**
MC74F374	**Fairchild**	**74F374**	**736**
	Signetics	**74F374**	**879,886**
MC74F533	Fairchild	74F533	
	Signetics	**74F533**	**879**
MC74F534	Fairchild	74F534	
	Signetics	**74F534**	**879**
MC74F74	Fairchild	74F74	
	Signetics	**74F74**	**879**
MC74HC00	National	MM74HC00	
	RCA	CD74HC00	
	SPI	**SP74HC00**	**848**
	Signetics	PCF74HC00	
	Toshiba	TC40H000	
MC74HC02	National	MM74HC02	
	RCA	CD74HC02	
	SPI	**SP74HC02**	**848**
	Signetics	PCF74HC02	
	Toshiba	TC40H002	
MC74HC04	National	MM74HC04	
	RCA	CD74HC04	
	SPI	**SP74HC04**	**848**
	Toshiba	TC40H004	
MC74HC08	National	MM74HC08	
	RCA	CD74HC08	
	SPI	**SP74HC08**	**848**
	Signetics	PCF74HC08	
MC74HC10	National	MM74HC10	
	RCA	CD74HC10	
	SPI	**SP74HC10**	**848**
	Signetics	PCF74HC10	
	SiliconG	SG75474	
	Toshiba	TC40H010	
MC74HC107	National	MM74HC107	
	RCA	CD74HC107	
	SPI	**SP74HC107**	**848**
	Signetics	PCF74HC107	
	Toshiba	TC40H107	
MC74HC109	National	MM74HC109	
	RCA	CD74HC109	
	SPI	**SP74HC109**	**848**
	Signetics	PCF74HC109	
MC74HC11	National	MM74HC11	
	RCA	CD74HC11	
	SPI	**SP74HC11**	**848**
	Signetics	PCF74HC11	
	Toshiba	TC40H011	
MC74HC112	National	MM74HC112	
	RCA	CD74HC112	
	SPI	SP74HC112N	
	Signetics	PCF74HC112	
MC74HC113	**SPI**	**SP74HC113**	**848**
MC74HC123	National	MM74HC123	
	RCA	CD74HC123	
	Signetics	PCF74HC123	
MC74HC125	**SPI**	**SP74HC125**	**848**
MC74HC126	**SPI**	**SP74HC126**	**848**
MC74HC132	National	MM74HC132	
	RCA	CD74HC132	
	SPI	**SP74HC132**	**848**
	Signetics	PCF74HC132	
MC74HC133	National	MM74HC133	
	RCA	CD74HC133	
	SPI	**SP74HC133**	**848**
	Signetics	PCF74HC133	
MC74HC138	National	MM74HC138	
	RCA	CD74HC138	
	SPI	**SP74HC138**	**848**
	Signetics	PCF74HC138	
MC74HC139	National	MM74HC139	
	RCA	CD74HC139	
	SPI	**SP74HC139**	**848**
	Signetics	PCF74HC139	
	Toshiba	TC40H139	
MC74HC14	National	MM74HC14	
	RCA	CD74HC14	
	SPI	**SP74HC14**	**848**
	Signetics	PCF74HC14	
MC74HC147	National	MM74HC147	
	RCA	CD74HC147	
	SPI	**SP74HC147**	**848**
	Signetics	PCF74HC147	
MC74HC151	National	MM74HC151	
	RCA	CD74HC151	
	SPI	**SP74HC151**	**848**
	Signetics	PCF74HC151	

◆ Discontinued

Bold face device numbers indicate manufacturers data is provided in the IC Master on the pages noted.

© IC MASTER 1984

Motorola Semiconductor Products (Cont'd)

Manufacturer Device	Replacement Source	Device	IC Master Page
MC74HC153	National	MM74HC153	
	RCA	CD74HC153	
	SPI	**SP74HC153**	**848**
	Signetics	PCF74HC153	
	Toshiba	TC40H153	
MC74HC154	National	MM74HC154	
	RCA	CD74HC154	
	Signetics	PCF74HC154	
MC74HC157	National	MM74HC157	
	RCA	CD74HC157	
	SPI	**SP74HC157**	**848**
	Signetics	PCF74HC157	
	Toshiba	TC40H157	
MC74HC158	National	MM74HC158	
	RCA	CD74HC158	
	SPI	**SP74HC158**	**848**
	Signetics	PCF74HC158	
	Toshiba	TC40H158	
MC74HC160	National	MM74HC160	
	RCA	CD74HC160	
	SPI	**SP74HC160**	**848**
	Signetics	PCF74HC160	
MC74HC161	National	MM74HC161	
	RCA	CD74HC161	
	SPI	**SP74HC161**	**848**
	Signetics	PCF74HC161	
MC74HC162	National	MM74HC162	
	RCA	CD74HC162	
	SPI	**SP74HC162**	**848**
	Signetics	PCF74HC162	
MC74HC163	National	MM74HC163	
	RCA	CD74HC163	
	SPI	**SP74HC163**	**848**
	Signetics	PCF74HC163	
MC74HC164	National	MM74HC164	
	RCA	CD74HC164	
	SPI	SP74HC164	
	Signetics	PCF74HC164	
MC74HC165	National	MM74HC165	
	RCA	CD74HC165	
	SPI	SP74HC165	
	Signetics	PCF74HC165	
MC74HC173	National	MM74HC173	
	RCA	CD74HC173	
	SPI	**SP74HC173**	**848**
	Signetics	PCF74HC173	
MC74HC174	National	MM74HC174	
	RCA	CD74HC174	
	SPI	**SP74HC174**	**848**
	Signetics	PCF74HC174	
	Toshiba	TC40H174	
MC74HC175	National	MM74HC175	
	RCA	CD74HC175	
	SPI	**SP74HC175**	**848**
	Signetics	PCF74HC175	
	Toshiba	TC40H175	
MC74HC182	SPI	SP74HC182	
MC74HC192	National	MM74HC192	
	RCA	CD74HC192	
	SPI	**SP74HC192**	**848**
	Signetics	PCF74HC192	
	Toshiba	TC40H192	
MC74HC193	National	MM74HC193	
	RCA	CD74HC193	
	SPI	**SP74HC193**	**848**
	Signetics	PCF74HC193	
	Toshiba	TC40H193	
MC74HC194	National	MM74HC194	
	RCA	CD74HC194	
	SPI	SP74HC194	
	Signetics	PCF74HC194	
MC74HC195	National	MM74HC195	
	RCA	CD74HC195	
	SPI	SP74HC195	
	Signetics	PCF74HC195	
MC74HC20	National	MM74HC20	
	RCA	CD74HC20	
	SPI	**SP74HC20**	**848**
	Signetics	PCF74HC20	
	Toshiba	TC40H020	
MC74HC221	National	MM74HC221	
	RCA	CD74HC221	
	Signetics	PCF74HC221	
MC74HC240	National	MM74HC240	
	RCA	CD74HC240	
	SPI	**SP74HC240**	**848**
	Signetics	PCF74HC240	
	Toshiba	TC40H240	
MC74HC241	National	MM74HC241	
	RCA	CD74HC241	
	SPI	**SP74HC241**	**848**
	Signetics	PCF74HC241	
MC74HC242	National	MM74HC242	
	RCA	CD74HC242	
		SGN	
	SPI	SP74HC242	
	Signetics	PCF74HC242	
MC74HC243	National	MM74HC243	
	RCA	CD74HC243	
	Signetics	PCF74HC243	
MC74HC244	National	MM74HC244	
	RCA	CD74HC244	
	Signetics	PCF74HC244	
MC74HC245	National	MM74HC245	
	RCA	CD74HC245	
	Signetics	PCF74HC245	
MC74HC251	National	MM74HC251	
	RCA	CD74HC251	
	SPI	**SP74HC251**	**848**
	Signetics	PCF74HC251	
MC74HC253	National	MM74HC253	
	RCA	CD74HC253	
	SPI	**SP74HC253**	**848**
	Signetics	PCF74HC253	
MC74HC257	National	MM74HC257	
	RCA	CD74HC257	
	SPI	**SP74HC257**	**848**
	Signetics	PCF74HC257	
MC74HC259	National	MM74HC259	
	RCA	CD74HC259	
	Signetics	PCF74HC259	
MC74HC266	National	MM74HC266	
	RCA	CD74HC266	
	SPI	**SP74HC266**	**848**
	Signetics	PCF74HC266	
MC74HC27	National	MM74HC27	
	RCA	CD74HC27	
	SPI	**SP74HC27**	**848**
	Signetics	PCF74HC27	
	Toshiba	TC40H027	
MC74HC273	RCA	CD74HC273	
	SPI	**SP74HC273**	**848**
	Signetics	PCF74HC273	
MC74HC280	National	MM74HC280	
	RCA	CD74HC280	
	SPI	**SP74HC280**	**848**
	Signetics	PCF74HC280	
MC74HC298	**SPI**	**SP74HC298**	**848**
MC74HC299	National	MM74HC299	
	RCA	CD74HC299	
	Signetics	PCF74HC299	
MC74HC30	National	MM74HC30	
	RCA	CD74HC30	
	SPI	**SP74HC30**	**848**
	Signetics	PCF74HC30	
MC74HC32	National	MM74HC32	
	RCA	CD74HC32	
	SPI	**SP74HC32**	**848**
	Signetics	PCF74HC32	
	Toshiba	TC40H032	
MC74HC354	National	MM74HC354	
	RCA	CD74HC354	
	Signetics	PCF74HC354	
MC74HC356	National	MM74HC356	
	RCA	CD74HC356	
	Signetics	PCF74HC356	
MC74HC365	National	MM74HC365	
	RCA	CD74HC365	
	SPI	**SP74HC365**	**848**
MC74HC366	National	MM74HC366	
	RCA	CD74HC366	
	Signetics	PCF74HC366	
MC74HC367	National	MM74HC367	
	RCA	CD74HC367	
	SPI	SP74HC367	
	Signetics	PCF74HC367	
MC74HC368	National	MM74HC368	
	RCA	CD74HC368	
	Signetics	PCF74HC368	
MC74HC373	National	MM74HC373	
	RCA	CD74HC373	
	SPI	**SP74HC373**	**848**
	Signetics	PCF74HC373	
MC74HC374	National	MM74HC374	
	RCA	CD74HC374	
	SPI	**SP74HC374**	**848**
	Signetics	PCF74HC374	
MC74HC390	National	MM74HC390	
	RCA	**CD74HC390**	**843**
	Signetics	PCF74HC390	
MC74HC393	National	MM74HC393	
	RCA	**CD74HC393**	**843**
	SPI	**SP74HC393**	**848**
	Signetics	PCF74HC393	
MC74HC4002	National	MM74HC4002	
	RCA	**CD74HC4002**	**843**
	SPI	SP74HC4002	
	Signetics	PCF74HC4002	
MC74HC4017	National	MM74HC4017	
	RCA	**CD74HC4017**	**843**
	SPI	**SP74HC4017**	**848**
	Signetics	PCF74HC4017	
MC74HC4020	National	MM74HC4020	
	RCA	**CD74HC4020**	**843**
	SPI	**SP74HC4020**	**848**
	Signetics	PCF74HC4020	
MC74HC4024	**RCA**	**CD74HC4024**	**843**
	Signetics	PCF74HC4024	
MC74HC4040	National	MM74HC4040	
	RCA	**CD74HC4040**	**843**
	Signetics	PCF74HC4040	
MC74HC4049	National	MM74HC4049	
	RCA	**CD74HC4049**	**843**
	Signetics	PCF74HC4049	
MC74HC4050	National	MM74HC4050	
	RCA	**CD74HC4050**	**843**
	Signetics	PCF74HC4050	
MC74HC4051	**RCA**	**CD74HC4051**	**843**
	Signetics	PCF74HC4051	
MC74HC4052	**RCA**	**CD74HC4052**	**843**
	Signetics	PCF74HC4052	
MC74HC4053	**RCA**	**CD74HC4053**	**843**
	Signetics	PCF74HC4053	
MC74HC4060	National	MM74HC4060	
	RCA	**CD74HC4060**	**843**
	Signetics	PCF74HC4060	
MC74HC4075	National	MM74HC4075	
MC74HC4078	National	MM74HC4078	
MC74HC42	National	MM74HC42	
	RCA	CD74HC42	
	SPI	**SP74HC42**	**848**
	Signetics	PCF74HC42	
MC74HC4511	National	MM74HC4511	
	RCA	**CD74HC4511**	**843**
	Signetics	PCF74HC4511	
MC74HC4514	National	MM74HC4514	
	RCA	**CD74HC4514**	**843**
	Signetics	PCF74HC4514	
MC74HC4520	**RCA**	**CD74HC4520**	**843**
	Signetics	PCF74HC4520	
MC74HC4538	National	MM74HC4538	
	RCA	**CD74HC4538**	**843**
	Signetics	PCF74HC4538	
MC74HC533	National	MM74HC533	
	RCA	**CD74HC533**	**843**
	SPI	**SP74HC533**	**848**
	Signetics	PCF74HC533	
MC74HC534	National	MM74HC534	
	RCA	**CD74HC534**	**843**
	SPI	SP74HC534	
	Signetics	PCF74HC534	
MC74HC540	**RCA**	**CD74HC540**	**843**
	Signetics	PCF74HC540	
MC74HC541	**RCA**	**CD74HC541**	**843**
	Signetics	PCF74HC541	
MC74HC563	National	MM74HC563	
	RCA	**CD74HC563**	**843**
	Signetics	PCF74HC563	
MC74HC564	National	MM74HC564	
	RCA	**CD74HC564**	**843**
	Signetics	PCF74HC564	
MC74HC573	National	MM74HC573	
	RCA	**CD74HC573**	**843**
	SPI	**SP74HC573**	**848**
	Signetics	PCF74HC573	
MC74HC574	National	MM74HC574	
	RCA	**CD74HC574**	**843**
	SPI	**SP74HC574**	**848**
	Signetics	PCF74HC574	
MC74HC640	National	MM74HC640	
	RCA	**CD74HC640**	**843**
	Signetics	PCF74HC640	
MC74HC643	National	MM74HC643	
	RCA	**CD74HC643**	**843**
	Signetics	PCF74HC643	
MC74HC645	National	MM74HC645	
	RCA	CD74HC645	
	Signetics	PCF74HC645	
MC74HC646	National	MM74HC646	
	RCA	**CD74HC646**	**843**
	Signetics	PCF74HC646	
MC74HC648	National	MM74HC648	
	RCA	**CD74HC648**	**843**
	Signetics	PCF74HC648	
MC74HC688	National	MM74HC688	
	RCA	**CD74HC688**	**843**
	Signetics	PCF74HC688	
MC74HC73	National	MM74HC73	
	RCA	CD74HC73	
	SPI	**SP74HC73**	**848**
	Signetics	PCF74HC73	
MC74HC74	National	MM74HC74	
	RCA	CD74HC74	
	SPI	**SP74HC74**	**848**
	Signetics	PCF74HC74	
	Toshiba	TC40H074	
MC74HC75	National	MM74HC75	
	RCA	CD74HC75	
	SPI	**SP74HC75**	**848**
	Signetics	PCF74HC75	
MC74HC76	National	MM74HC76	
	RCA	CD74HC76	
	SPI	**SP74HC76**	**848**
	Signetics	PCF74HC76	
	Toshiba	TC40H076	
MC74HC85	National	MM74HC85	
	RCA	CD74HC85	
	SPI	SP74HC85	
	Signetics	PCF74HC85	
MC74HC86	National	MM74HC86	
	RCA	CD74HC86	
	SPI	SP74HC86N	
	Signetics	PCF74HC86	
MC74HCT00	**RCA**	**CD74HCT00**	**842**
MC74HCT04	**RCA**	**CD74HCT04**	**842**
MC74HCT138	**RCA**	**CD74HCT138**	**842**
	SPI	**SP74HCT138**	**844**
	Zytrex	ZX74HCT138-2	
MC74HCT240	**RCA**	**CD74HCT240**	**842**
	SPI	**SP74HCT240**	**844**
	Signetics	PCF74HCT240	
	Zytrex	ZX74HCT240-2	
MC74HCT241	**RCA**	**CD74HCT241**	**842**
	SPI	**SP74HCT241**	**844**
	Signetics	PCF74HCT241	
	Zytrex	ZX74HCT241-2	
MC74HCT244	**RCA**	**CD74HCT244**	**842**
	SPI	**SP74HCT244**	**844**
	Signetics	PCF74HCT244	
	Zytrex	ZX74HCT244-2	
MC74HCT373	**RCA**	**CD74HCT373**	**842**
	SPI	**SP74HCT373**	**844**
	Zytrex	ZX74HCT373-2	
MC74HCT374	**RCA**	**CD74HCT374**	**842**
	SPI	**SP74HCT374**	**844**
	Zytrex	ZX74HCT374-2	
MC74HCT533	RCA	CD74HCT533	
	Zytrex	ZX74HCT533	
MC74HCT534	RCA	CD74HCT534	
	Signetics	PCF74HCT534	
	Zytrex	ZX74HCT534-2	
MC74HCT540	RCA	CD74HCT540	
	SPI	**SP74HCT540**	**844**
	Zytrex	ZX74HCT540-2	
MC74HCT542	RCA	CD74HCT541	
	SPI	**SP74HCT541**	**844**
	Zytrex	ZX74HCT542-2	
MC74HCT640	RCA	CD74HCT640	
	Signetics	PCF74HCT640	
	Zytrex	ZX74HCT640-2	
MC74HCT643	RCA	CD74HCT643	
	Signetics	PCF74HCT643	
	Zytrex	ZX74HCT643-2	
MC74HCU04	RCA	CD74HCU04	
MC75107	Fairchild	75107	
	National	DS75107	
		LM75107A	
	TI	SN75107	
		SN75107B	
MC75108	Fairchild	75108	
	National	DS75108	
		LM75108A	
	TI	SN75108	
		SN75108B	
MC75109	TI	SN75109	
		SN75109A	
MC75110	Fairchild	75110	
	Hitachi	HD75110	
	National	LM75110	
	TI	SN75110	
		SN75110A	
MC75125	National	DS75125	
	TI	SN75125	

◆ Discontinued

The manufacturers report their devices can be used as direct replacements.
Performance details often differ, so compare the specifications considering your requirements.

Motorola Semiconductor Products (Cont'd)

Manufacturer Device	Replacement Source	Device	IC Master Page
MC75127	National	DS75127	
	TI	SN75127	
MC75128	National	DS75128	
	TI	SN75128	
MC75129	National	DS75129	
	TI	SN75129	
MC75140	TI	SN75140	
MC7520	Fairchild	7520	
	SiliconG	SG7520	
	TI	SN7520	
MC7521	Fairchild	7521	
	National	LM7521	
	SiliconG	SG7521	
	TI	SN7521	
MC7522	SiliconG	SG7522	
	TI	SN7522	
MC7523	National	LM7523	
	Raytheon	RC7523	
	SiliconG	SG7523	
	TI	SN7523	
MC75235	TI	SN75235	
MC7524	Fairchild	75S24	
	Hitachi	HA1902	
	National	DS75S24	
	Signetics	7524	
	SiliconG	SG7524	
	TI	SN75224	
		SN7524	
MC7525	AMD	7525	
	Fairchild	7525	
	National	LM7525	
	SiliconG	SG7525	
MC7528	Raytheon	RC7528	
	SiliconG	SG7528	
	TI	SN7528	
	Thomson-CSF	SFC2528	
MC7529	Fairchild	7529	
	National	LM7529	
	Raytheon	RC7529	
	SiliconG	SG7529	
MC75325	National	DS75325	
	SiliconG	SG75325	
	TI	SN75325	
MC7534	SiliconG	SG7534	
MC7535	National	LM7535	
	SiliconG	SG7535	
MC75358	Motorola	MC75368	
	TI	SN75368	
MC75365	National	DS75365	
	TI	SN75365	
MC75368	Motorola	MC75358	
	TI	SN75368	
MC7538	Fairchild	7538	
	National	LM7538	
	SiliconG	SG7538	
MC7539	Fairchild	7539	
	National	LM7539	
	SiliconG	SG7539	
MC75401	Fairchild	75461	
	Motorola	MC75461	
	National	DS75461	
	SiliconG	SG75461	
	TI	SN75461	
MC75402	Fairchild	75462	
	Motorola	MC75462	
	National	DS75462	
	SiliconG	SG75462	
	TI	SN75462	
MC75403	Motorola	MC75463	
	National	DS75463	
	SiliconG	SG75463	
	TI	SN75463	
MC75404	Motorola	MC75464	
	National	DS75464	
		SG75464	
	SiliconG	SG75464	
	TI	SN75464	
MC75450	Fairchild	75450	
	National	DS75450	
	SiliconG	SG75450	
	TI	SN75450	
MC75451	Fairchild	75451	
	National	DS75451	
	SiliconG	SG75451	
	TI	SN75451	
MC75452	Fairchild	75452	
	Hitachi	HD75452	
	National	DS75452	
		(Continued)	

Manufacturer Device	Replacement Source	Device	IC Master Page
MC75452	SiliconG	SG75452	
	TI	SN75452	
MC75453	Fairchild	75453	
	Hitachi	HD75453	
	National	DS75453	
		LM75453	
	SiliconG	SG75453	
	TI	SN75453	
MC75454	National	DS75454	
	SiliconG	SG75454	
	TI	SN75454	
MC75460	National	DS75460	
	SiliconG	SG75460	
	TI	SN75460	
MC75461	Fairchild	75461	
	Motorola	MC75401	
	National	DS75461	
	SiliconG	SG75461	
	TI	SN75461	
MC75462	Fairchild	75462	
	Motorola	MC75402	
	National	DS75462	
	SiliconG	SG75462	
	TI	SN75462	
MC75463	Motorola	MC75403	
	National	DS75463	
	SiliconG	SG75463	
	TI	SN75463	
MC75464	Motorola	MC75404	
	National	DS75464	
		SG75464	
	SiliconG	SG75464	
	TI	SN75464	
MC75491	Fairchild	75491	
	National	DS75491	
	TI	SN75491	
MC75492	Fairchild	75492	
	National	DS75492	
	TI	SN75492	
MC7802	Fairchild	μA78L02	
	TI	μA78L02	
MC7805	AMD	LM309	
	Fairchild	μA309	
		μA7805	
	Lambda	LLM309	
		LMC7805	
		LμA7805	
	Motorola	LM309	
	National	LM309	
		LM7805	
	NEC	μPC7805	
	SGS	L7805	
		L7810	
	SiliconG	SG309	
		SG340-05	
		SG340-5	
	TI	μA7805	
	Thomson-CSF	SFC2309	
	Toshiba	TA78005	
MC7806	Fairchild	μA7806	
	Lambda	LMC7806	
		LμA7806	
	SiliconG	SG340-6	
		SG7806	
	TI	μA7806	
MC7808	Fairchild	μA7808	
	Lambda	LMC7808	
		LμA7808	
	NEC	μPC7808	
	SiliconG	SG340-8	
		SG7808	
	TI	LM340-8	
		μA7808	
MC7812	Fairchild	μA7812	
	Lambda	LMC7812	
		LμA7812	
	National	LM7812	
	NEC	μPC7812	
	SGS	L7812	
	SiliconG	SG7812	
	TI	μA7812	
	Toshiba	TA78012	
MC7815	Fairchild	μA7815	
		μA78L15	
	Lambda	LMC7815	
		LμA7815	
	Motorola	MC78L15	
	National	LM340-15	
		LM340LA-15	
		LM340T-15	
		LM7815	
		(Continued)	

Manufacturer Device	Replacement Source	Device	IC Master Page
MC7815	National	LM78L15	
	NEC	μPC7815	
		μPC78L15	
	SGS	L7815	
	SiliconG	SG340-15	
		SG7815	
	TI	LM340-15	
		μA7815	
		μA78L15	
	Thomson-CSF	SFC2815	
	Toshiba	TA78015	
MC7818	SGS	L7818	
MC7824	Fairchild	μA7824	
	Lambda	LMC7824	
		LμA7824	
	NEC	μPC7824	
	SGS	L7824	
	SiliconG	SG7824	
	TI	LM340-24	
		μA7824	
MC78L05	Fairchild	μA78L05	
	National	LM340LA-5	
		LM78L05	
	NEC	μPC78L05	
	TI	μA78L05	
	Thomson-CSF	SFC2805	
MC78L06	Fairchild	μA78L06	
	TI	μA78L06	
		μA87L06	
MC78L08	NEC	μPC78L08	
	TI	μA78L08	
MC78L12	Fairchild	μA78L12	
	National	LM340LA-12	
		LM78L12	
	NEC	μPC78L12	
	TI	μA78L12	
	Thomson-CSF	SFC2812	
MC78L15	Fairchild	μA7815	
		μA78L15	
	Lambda	LMC7815	
		LμA7815	
	Motorola	**MC7815**	**3531**
	National	LM340-15	
		LM340LA-15	
		LM340T-15	
		LM7815	
		LM78L15	
	NEC	μPC7815	
		μPC78L15	
	SGS	L7815	
	SiliconG	SG340-15	
		SG7815	
	TI	LM340-15	
		μA7815	
		μA78L15	
	Thomson-CSF	SFC2815	
	Toshiba	TA78015	
MC78M05	Fairchild	μA78M05	
	National	LM341-5	
		LM342-05	
		LM78M05	
	NEC	μPC78M05	
	Sanyo	L78M05	
	TI	μA78M05	
MC78M06	Fairchild	μA78M06	
	Sanyo	L78M06	
	TI	μA78M06	
MC78M08	Fairchild	μA78M08	
	NEC	μPC78M08	
	Sanyo	L78M08	
	TI	μA78M08	
MC78M12	NEA	μPC78M12	
	Fairchild	μA78M12	
	National	LM341-12	
		LM342-12	
		LM78M12	
	NEC	μPC78M12	
	Sanyo	L78M12	
MC78M15	Fairchild	μA78M15	
	National	LM341-15	
		LM342-15	
		LM78M15	
	NEC	μPC78M15	
	Sanyo	L78M15	
MC78M18	Sanyo	L78M18	
MC78M20	TI	μA78M20	

Manufacturer Device	Replacement Source	Device	IC Master Page
MC78M24	Fairchild	μA78M24	
	Sanyo	L78M24	
	TI	μA78M24	
MC78T05	LinearTech	LM123	
	Motorola	**LM123**	**3531**
	National	LM123	
	SiliconG	SG123	
	TI	SN55123	
MC78T05C	Fairchild	SH0323	
		SH323	
		μA78H05	
	Lambda	LAS1405	
		LAS1905	
	LinearTech	LM323	
	Micropac	M78H05	
	Motorola	**LM323**	**3531**
	National	LM323	
	SiliconG	SG323	
MC7902	Fairchild	μA7902	
	Lambda	LMC7902	
		LμA7902	
MC7905	Fairchild	μA7905	
		μA79M05	
	Lambda	LMC7905	
		LμA7905	
	National	LM320MP5	
		LM7905	
		LM79M05	
	SiliconG	SG120-5	
		SG320-05	
		SG320P-5	
		SG7905	
	TI	μA7905	
	Fairchild	MC7905	
	Lambda	LMC7905	
	SiliconG	SG7905	
MC7906	Lambda	LMC7906	
	TI	μA7906	
MC7908	Fairchild	MC7908	
		μA7908	
		μA79M08	
	Lambda	LMC7908	
		LμA7908	
	SiliconG	SG7908	
	TI	μA7908	
		μA79M08	
MC7912	Fairchild	μA7912	
		μA79M12	
	Lambda	LμA7912	
	National	LM320MP12	
		LM7912	
		LM79M12	
	SiliconG	SG320P-12	
		SG7912	
	TI	LM320-12	
		μA7912	
	Thomson-CSF	TDB2912	
MC7915	Fairchild	μA7915	
	Lambda	LμA7915	
	National	LM320-15	
		LM320T15	
		LM7915	
	SiliconG	SG320-15	
		SG7915	
	TI	LM320-5	
		μA7915	
	Thomson-CSF	TDB2915	
MC7918	Lambda	LμA7918	
	TI	μA7918	
MC7924	Lambda	LMC7924	
	TI	μA7924	
MC7952	National	LM320-5	
	SiliconG	SG320-5	
		SG320-5	
	TI	LM320-5	
	Thomson-CSF	TDB2905	
MC830	Fairchild	930	
		9930	
	Motorola	MC930	
	National	DM930	
	Raytheon	RM930	
MC831	TI	SN15831	
MC834	TI	SN15834	
MC835	Fairchild	9135	
		9935	
	Motorola	MC935	
	National	DM935	
MC837	Fairchild	937	
		9937	
		(Continued)	

◆ Discontinued

Bold face device numbers indicate manufacturers data is provided in the IC Master on the pages noted.

© IC MASTER 1984

Motorola Semiconductor Products (Cont'd)

Manufacturer Device	Replacement Source	Device	IC Master Page
MC837	Motorola	MC937	
	National	DM937	
MC8500	**SiliconSys**	**SSI8500**	**4208**
MC8502	**SiliconSys**	**SSI8502**	**4208**
MC8503	Fairchild	9401	
		F9401	
	Signetics	9401	
MC851	Fairchild	951	
		9951	
	Motorola	MC852	
		MC951	
	Raytheon	RM951	
	TI	SN15851	
		SN15951	
MC852	Fairchild	951	
		9951	
	Motorola	MC851	
		MC951	
	Raytheon	RM951	
	TI	SN15851	
		SN15951	
MC8520	**SiliconSys**	**SSI8520**	**4208**
MC853	Fairchild	9093	
	Motorola	MC953	
	National	DM9093	
	Raytheon	RM993	
	TI	SN158093	
		SN159093	
MC855	Fairchild	9097	
	Motorola	MC955	
	National	DM9097	
	Raytheon	RM997	
	TI	SN158097	
		SN159097	
MC856	Fairchild	9094	
	Motorola	MC956	
	National	DM9094	
	Raytheon	RM9094	
		RM994	
	TI	SN158094	
		SN159094	
MC857	Fairchild	9157	
	Motorola	MC957	
	National	DM9567	
		DM957	
	Raytheon	RM957	
MC858	Fairchild	9158	
	Motorola	MC958	
	National	DM958	
	Raytheon	RM958	
MC8T13	National	DS75121	
		LM75121	
	Signetics	**N8T13**	**876**
	TI	N8T13	
		SN75121	
MC8T14	National	DS75122	
		LM75122	
	Signetics	N8T14	
	TI	N8T14	
		SN75122	
MC8T23	National	DS75123	
		LM75123	
	Signetics	**N8T23**	**876**
	TI	N8T23	
		SN75123	
MC8T24	National	DS75124	
		LM75124	
	Signetics	**N8T24**	**876**
	TI	N8T24	
		SN75124	
MC8T26	Hitachi	HD268T26	
	Motorola	MC6880A	
	Signetics	N8T26	
MC8T26A	Fairchild	μA8T26A	
	National	DS8T26A	
	Signetics	**N8T26A**	**876**
	TI	N8T26A	
MC8T28	**Signetics**	**N8T28**	**876**
MC8T95	Motorola	MC6885	
	National	DM8095	
	Signetics	**N8T95**	**876**
	TI	SN74365	
MC8T96	Motorola	MC6886	
	National	DM8096	
	Signetics	**N8T96**	**876**
	TI	SN74366	
MC8T97	Motorola	MC6887	
	National	DM8097	
		(Continued)	

Manufacturer Device	Replacement Source	Device	IC Master Page
MC8T97	**Signetics**	**N8T97**	**876**
	TI	SN74367	
MC8T98	Motorola	MC6888	
	National	DM8098	
		DS8674	
	Signetics	**N8T98**	**876**
	TI	SN74368	
MC930	Fairchild	930	
		9930	
	Motorola	MC830	
	National	DM930	
	Raytheon	RM930	
MC932	Fairchild	932	
		9932	
	National	DM932	
	Raytheon	RM932	
MC933	Fairchild	933	
		9933	
	National	DM933	
MC934	Raytheon	RM934	
	TI	SN15934	
MC935	Fairchild	9135	
		9935	
	Motorola	MC835	
	National	DM935	
MC936	Fairchild	936	
		9936	
	National	DM936	
MC937	Fairchild	937	
		9937	
	Motorola	MC837	
	National	DM937	
MC941	Fairchild	9941	
	Raytheon	RM941	
MC943	Fairchild	SH2001	
MC944	Fairchild	944	
		9944	
	National	DM944	
MC945	Fairchild	945	
		9945	
	National	DM945	
MC946	Fairchild	946	
		9946	
	National	DM946	
MC948	Fairchild	948	
		9948	
	National	DM948	
MC949	Fairchild	949	
	National	DM949	
	Raytheon	RM949	
MC950	Fairchild	950	
		9950	
MC951	Fairchild	951	
		9951	
	Motorola	MC851	
		MC852	
	Raytheon	RM951	
	TI	SN15851	
		SN15951	
MC952	Fairchild	9099	
	Raytheon	RM952	
		RM999	
MC953	Fairchild	9093	
	Motorola	MC853	
	National	DM9093	
	Raytheon	RM993	
	TI	SN158093	
		SN159093	
MC955	Fairchild	9097	
	Motorola	MC855	
	National	DM9097	
	Raytheon	RM997	
	TI	SN158097	
		SN159097	
MC956	Fairchild	9094	
	Motorola	MC856	
	National	DM9094	
	Raytheon	RM9094	
		RM994	
	TI	SN158094	
		SN159094	
MC957	Fairchild	9157	
	Motorola	MC857	
	National	DM9567	
		DM957	
	Raytheon	RM957	
MC958	Fairchild	9158	
	Motorola	MC858	
	National	DM958	
	Raytheon	RM958	

Manufacturer Device	Replacement Source	Device	IC Master Page
MC961	Fairchild	961	
		9961	
	National	DM961	
MC962	Fairchild	962	
		9962	
	National	DM962	
MC963	Fairchild	963	
		9963	
	National	DM963	
	Raytheon	RM963	
MCA1300	National	MCA1300	
MCA500	National	MCA500	
MCM10139	Signetics	10139	
MCM10144	Fairchild	F10144	
	Signetics	10144	
	TI	SN10144	
MCM10145	Fairchild	F10145A	
	Signetics	10145	
MCM10146	**AMD**	**AM10415**	**3909**
	Fairchild	F10415	
	Fujitsu	MBM10415	
		MCM10415	
	Hitachi	HM2110	
		HM2112	
	National	DM10415	
	Siemens	GXB10415	
	Signetics	10415	
MCM10147	TI	SN10147	
MCM10148	Hitachi	HD10148	
	NEC	μPB10148	
	Signetics	10148	
	TI	SN10148	
MCM10149	Fairchild	F10416	
	Signetics	**10149**	**858**
MCM10152	Fairchild	F10414	
	National	DM10414	
MCM10422	Fairchild	F10422	
	Fujitsu	MBM10422	
	Hitachi	HM10422	
	National	DM10422	
	Signetics	10422	
MCM10470	AMD	AM10470	
	Fairchild	F10470	
	Fujitsu	MBM10470	
	Hitachi	HM10470	
		HM2142	
	National	DM10470	
	Signetics	10470	
MCM2016	**AMD**	**AM9128**	**3917**
	Fairchild	F3528	
	Fujitsu	MB8128	
	Intel	2128	
	National	NMC2116	
	OKI	**MSM5128**	**4118**
	Synertek	SY2128	
		SY2129	
	TI	TMS4016	
	Toshiba	TMM2016	
MCM2115	AMD	AM93415	
	AMI	4015	
	Fairchild	93415	
	Fujitsu	MBM93415	
	Hitachi	HM2510	
		HM2511	
	Intel	2115A	
	Signetics	N82S10	
		S82S10	
	TI	SN54S314	
		SN74S314	
MCM2125	AMI	S6508	
	Fairchild	4736B	
	Harris	**HM6508**	**3965**
	Intel	2125A	
	National	MM74C929	
		NMC6508	
	NEC	μPD443	
	SSS	SCM21C02	
	Toshiba	TC5508	
MCM2147	AMD	AM2147	
	AMI	4017	
	Fujitsu	MBM2147	
	Hitachi	HM4847	
	Intel	2147	
	Intersil	IM2147	
	ITT	4547	
	National	MM2147	
	NEC	μPD2147	
	Synertek	SY2147	
	TI	TMS2147	
	Toshiba	TMM315	
	Universal	UM2147	

Manufacturer Device	Replacement Source	Device	IC Master Page
MCM2532	Hitachi	HN462532	
	National	MM2532	
		NMC2532	
		TDA2530	
		TDA2532	
	Plessey	TDA2530	
	Siemens	TDA2530	
	SiliconG	SG2532	
	TI	TMS2532	
	Universal	UM2532	
MCM2708	AMD	AM2708	
	Hitachi	HN462708	
	Motorola	MC27A08	
	National	MM2708	
	Panasonic	MN2708	
	Rockwell	2708	
	TI	TMS2708	
MCM2716	AMD	AM2716	
	Fujitsu	MB2716	
	Hitachi	HN462716	
	Intel	2716	
	Mostek	MK2716	
	National	MM2716	
	NEC	μPD2716	
	OKI	**MSM2716**	**4118**
	Panasonic	MN2716	
	SGS	M2716	
	TI	TMS2516	
MCM2801	NCR	NCR52801	
MCM2816	Hitachi	HN48016	
	NCR	NCR2168	
MCM4116	AMD	AM9016	
	Fairchild	F4116	
	Hitachi	HM4716	
	Intel	2118	
	Intersil	IM7116	
	ITT	ITT4116	
	Mostek	MK4116	
	National	MM5290	
	NEC	**μPD416**	**4073**
	Panasonic	MN4116	
	SGS	M4116	
	Siemens	HYB4116	
	Signetics	2690	
	TI	TMS4116	
MCM6116	Fujitsu	MB8416	
	Harris	HM65162	
	Hitachi	HM6116	
	IDT	IDT6116	
	MicroPwr	MP6116	
	Mostek	MK6116	
	NEC	**μPD446**	**4090**
	RCA	CDM6116	
	SMOS	SRM2016	
	Toshiba	TC5517A	
		TC5517B	
MCM6160	AMD	AM27S190	
	Fairchild	93510	
		93Z510	
	Fujitsu	MB7137	
		MB7137E-W	
	Harris	HM76160	
	Hitachi	HN25168	
	MMI	**63S1681**	**4026**
	National	**DM87S190**	**4057**
	NEC	μPB409	
	Raytheon	**29683**	**4131**
	Signetics	N82S190	
	TI	TBP28SA166	
MCM6256	Mitsubishi	M5M4256	
MCM63128	AMD	AM92128	
	AMI	**S23128**	**3935**
	GI	R09128	
	Hitachi	HN613128	
	National	S2128	
	NCR	NCR23128	
	NEC	μPD2/83128	
		μPD23/83128	
	OKI	**MSM38128**	**4118**
	Signetics	**23128-30**	**4202**
	Synertek	SY23128	
	VTI	**VT23128**	**4252**
MCM63256	AMD	AM92256	
	Fujitsu	MB83256	
	GI	R09256	
	Hitachi	HN613256	
	MicroPwr	MP2326	
	Mostek	MK38000	
	NCR	23256	
	NEC	μPD2/83256	
		μPD23/83256	
	SMOS	SMM2326	
		(Continued)	

◆ Discontinued

The manufacturers report their devices can be used as direct replacements.
Performance details often differ, so compare the specifications considering your requirements.

Motorola Semiconductor Products (Cont'd)

Manufacturer Device	Replacement Source	Device	IC Master Page
MCM63256	Signetics	23256	
	Synertek	SY23256	
	Toshiba	TMM23256	
MCM6641	EMM-SESCO	4044	
	Intel	2141	
		2141A	
	Intersil	IM7141	
	Mostek	MK4104	
	National	MM2141	
	NEC	μPD4104	
	TI	TMS4044	
	Zilog	Z6104	
MCM6664	Fujitsu	MB8265	
		MB8265A	
		MB8266A	
MCM6665	Fairchild	F4164	
		F64K	
	Fujitsu	MB8264	
		MB8266	
	Hitachi	HM4864	
	IMS	IMS2600	
	Intel	2164	
	National	NMC4164	
	NEC	μPD4164	
	OKI	MSM3764	
	TI	TMS4164	
	Toshiba	TMM4164	
MCM67365-25	AMD	AM92640	
	AMI	**S68B364**	**3933**
	Fairchild	**F3564-25**	**1455**
	GTEMicro	G5364	
	Mostek	MK36000-4	
	NEC	μPD2/8364-20	
		μPD23/8364-20	
	Signetics	2064-20	
	Synertek	SY2364-2	
MCM6810	AMI	S6810	
	Fairchild	**F6810**	**1461**
	Hitachi	HD6810	
		HD68A10	
	Motorola	MC6810	
	Thomson-CSF	EF6810	
MCM68308	Fairchild	F68308	
MCM68316	AMD	AM9218	
	Fairchild	3516	
		68316	
		F3516	
		F35316	
		F68316	**1464**
	GI	R03-9316	
	GTEMicro	2316	
	Intel	2316	
	Mostek	MK34000	
	Motorola	MCM68A316	
		MM2316	
	National	MM52116	
		MM5258	
	NCR	2316	
		NCR2316	
	NEC	μPD2316	
	OKI	**MSM2916**	**4118**
	Rockwell	R2316	
	SGS	M2316	
	TI	SBP8316	
	Toshiba	TMM331A	
		TMM334	
MCM68332	AMD	AM9232	
	AMI	S68322	
		S68A332	
	Fairchild	F3532	
	GI	R094132	
		T094132	
	GTEMicro	2332	
	Hitachi	HN46332	
	Intersil	IM7332	
	Motorola	MC68332	
		MCM68A332	**4048**
	National	MM52132	
	NCR	2332	
		NCR2332	
	NEC	**μPD2332**	**4100**
	OKI	**MSM2932**	**4118**
	RCA	**CDM5333**	**1593**
	Rockwell	R2332	
	SiliconG	SG3532	
	SSS	SCM23C32	
	SMC	ROM4732	
	Synertek	**SY2332**	**4211**

(Continued)

Manufacturer Device	Replacement Source	Device	IC Master Page
MCM68332	**TI**	**TMS4732**	**4226**
	Toshiba	TM2332	
		TMM333	
	Universal	UM2332	
	VTI	**VT2332**	**4249**
MCM68364	AMI	S68364	
	GI	R09464	
	GTEMicro	G5364	
	Intersil	IM7364	
	MicroPwr	MP2364	
	Mitsubishi	M5L2364	
	Mostek	MK36000	
	National	MM5235	
	NCR	NCR2364	
	RCA	**CDM5364**	**1593**
	SMOS	SMM2364	
	SGS	M36000	
	Signetics	2664A	
	SSS	SCM23C64	
		SCM23C65	
	SMC	ROM36000	
	Synertek	**SY2364**	**4211**
	TI	**TMS4764**	**4225**
	Toshiba	TM2364	
	VTI	**VT2364**	**4250**
MCM68365	AMD	AM9264	
	AMI	S4264	
		S68A364	**3933**
	GTEMicro	2364-3	
	Hitachi	HN48364	
	Mostek	MK36000-5	
	Motorola	MCM68366	
	National	MM52164	
	NCR	2364	
	NEC	UPD2/8364-30	
		μPD23/8364-30	
	OKI	MSM2965	
	Signetics	2664A-30	
	Synertek	**SY2364-3**	**4211**
	Toshiba	TMM2364	
	Weitek	SC8164	
MCM68366	AMD	AM9264	
	AMI	S4264	
		S68A364	**3933**
	GTEMicro	2364-3	
	Hitachi	HN48364	
	Mostek	MK36000-5	
	Motorola	MCM68365	
	National	MM52164	
	NCR	2364	
	NEC	UPD2/8364-30	
		μPD23/8364-30	
	OKI	MSM2965	
	Signetics	2664A-30	
	Synertek	**SY2364-3**	**4211**
	Toshiba	TMM2364	
	Weitek	SC8164	
MCM68708	AMD	AM9708	
	Fairchild	F68708	
MCM68A10	Hitachi	HM468A10	
MCM68A30	Hitachi	HN46830	
MCM68A308	AMD	8308	
	NEC	μPD2308	
MCM68A316	AMD	AM9218	
	Fairchild	3516	
		68316	
		F3516	
		F35316	
		F68316	**1464**
	GI	R03-9316	
	GTEMicro	2316	
	Intel	2316	
	Mostek	MK34000	
	Motorola	MCM68316	
		MM2316	
	National	MM52116	
		MM5258	
	NCR	2316	
		NCR2316	
	NEC	μPD2316	
	OKI	**MSM2916**	**4118**
	Rockwell	R2316	
	SGS	M2316	
	TI	SBP8316	
	Toshiba	TMM331A	
		TMM334	
MCM68A332	AMD	AM9232	
	AMI	S68322	
		S68A332	
	Fairchild	F3532	
	GI	R094132	
		T094132	

(Continued)

Manufacturer Device	Replacement Source	Device	IC Master Page
MCM68A332	GTEMicro	2332	
	Hitachi	HN46332	
	Intersil	IM7332	
	Motorola	MC68332	
		MCM68332	
	National	MM52132	
	NCR	2332	
		NCR2332	
	NEC	**μPD2332**	**4100**
	OKI	**MSM2932**	**4118**
	RCA	**CDM5333**	**1593**
	Rockwell	R2332	
	SiliconG	SG3532	
	SSS	SCM23C32	
	SMC	ROM4732	
	Synertek	**SY2332**	**4211**
	TI	**TMS4732**	**4226**
	Toshiba	TM2332	
		TMM333	
	Universal	UM2332	
	VTI	**VT2332**	**4249**
MCM68B10	Fairchild	F68B10	
MCM68B308	Fairchild	F68B308	
MCM76161	AMD	AM27PS191	
		AM27S191	
	Fairchild	93511	
		93Z511	
	Fujitsu	MB7138	
		MB7138E-W	
	Harris	HM76161	
	Hitachi	HN25169	
	MMI	**63S1681**	**4026**
	National	**DM87S191**	**4057**
	NEC	μPB429	
	Raytheon	**29681**	**4131**
		29681A	**4131**
	Signetics	N82S191	
	TI	**TBP28S166**	**4247**
MCM76165	AMD	AM27PS185	
	Fujitsu	MB7134	
		MB7152	
	Harris	HM76165	
	MMI	**63S441**	**4026**
	NEC	μPB426	
	Raytheon	29653	
	Signetics	N82HS195	
		N82S195	**4182**
MCM7621	AMD	AM27S13	
	Fairchild	93446	
	Harris	HM7621	
	Intel	3622	
	MMI	6306-1	
		63S241	**4026**
	National	**DM74S571**	**4057**
	Raytheon	**29611**	**4131**
	Signetics	N82S131	
	TI	SN74S571	
MCM7641	AMD	AM27S31	
	Fairchild	93448	
	Fujitsu	MB7126	
	Harris	HM7641	
	MMI	6341-1	
	National	**DM74S474**	**4057**
	Signetics	N82S141	
	TI	**TBP28S46**	
			542,543,4245
MCM7642	AMD	AM27S32	
	Fairchild	93452	
	Fujitsu	MB7121	
	Harris	HM7642	
	Hitachi	HN25044	
	MMI	6352-1	
	National	**DM74S572**	**4057**
	NEC	μPB406	
	Signetics	N82S136	
	TI	**TBP24SA41**	**4239**
MCM7643	AMD	AM27S33	
	Fairchild	93453C	
	Fujitsu	MB7122	
	Harris	HM7643	
		HM7643A	
	MMI	5353-1	
		6353-1	
	National	**DM74S573**	**4057**
	Signetics	N82HS137	
		N82S137	**4172**
		S82S195	**4182**
	TI	**TBP24S41**	
			542,4239
MCM7643M	AMD	AM27S33M	
		AM27S41	**3907**
	Fairchild	93453M	

(Continued)

Manufacturer Device	Replacement Source	Device	IC Master Page
MCM7643M	Fujitsu	MB7122E-W	
		MB7152E-W	
	Harris	**HM7643-2**	**3948**
	MMI	**53S441**	**4026**
	National	**DM54S573**	**4057**
		DM54S573A	**4057**
	Signetics	S82HS137	
		S82S137	**532**
		S82S195	**4182**
	TI	**TBP24S41M**	
			542,4239
MCM7649	AMD	AM27S29	
	Fujitsu	MB7124	
	Harris	HM7649	
	MMI	6349-1	
	National	**DM74S472**	**4057**
	Raytheon	**29621**	**4131**
	Signetics	N82S147	
	TI	**TBP28S42**	
			542,4244
		TBP28S42M	
			542,4244
◆MCM7680	AMD	AM27S180	
		AM27S280	
	Fairchild	93450	
		93Z450	
	Fujitsu	MB7131	
	Hitachi	HN25088	
	Intel	3608	
	MMI	6380-1	
	National	**DM87S180**	**4057**
		DM87S229	
	NEC	μPB408	
	Signetics	N82S180	
	TI	TBP28SA86	
MCM7681	AMD	AM27PS181	
		AM27S181	
		AM27S281	
	Fairchild	93Z451	
		F93451	
	Fujitsu	MB7132	
	Harris	HM7681	
	Hitachi	HN25089	
	Intel	3628	
		3628A	
		3628B	
	MMI	6381-1	
	National	**DM87S181**	**4057**
		DM87S228	
	NEC	μPB417	
	Raytheon	29631	
		29631A	**4131**
		29633	
	Signetics	825181	
		N82HS181	
		N82S181	
	Supertex	SM82S181	
	TI	TBP28S86	
◆MCM7684	AMD	AM27S184	
	Fujitsu	MB7127	
	Harris	HM7684	
	Hitachi	HM25045	
	MMI	6388	
		6388-1	
	National	**DM87S184**	**4057**
	Signetics	N82S184	
	TI	**TBP24SA81**	**4240**
MCM7685	AMD	AM27S185	
	Fujitsu	MB7128	
	Harris	HM7685	
	Hitachi	HN25085	
	MMI	6389	
		6389-1	
		63S841	**4026**
	National	**DM87S185**	**4057**
	Raytheon	29651	
		29651A	**4131**
	Signetics	N82HS185	
		N82S185	
	TI	**TBP24S81**	
			542,4239
◆MCM7686	Harris	HM7686	
	National	DM87S186	
◆MCM7687	National	DM87S187	
◆MCM82707	Signetics	N82S707	
◆MCM82708	Signetics	N82S708	
◆MCM93412	AMD	AM93412	
	Fairchild	93412	
MCM93422	AMD	AM93422	
	Fairchild	93422	
MCM93L422	AMD	AM93L422	
	Fairchild	93L422	

◆ Discontinued

Bold face device numbers indicate manufacturers data is provided in the IC Master on the pages noted.

© IC MASTER 1984

Motorola Semiconductor Products (Cont'd)

Manufacturer Device	Replacement Source	Device	IC Master Page
MFQD2404	TI	TIED461	
MFQD2405	TI	TIED463	
MHW1221	Amperex	BGY56	
	TRW-LSI	CA2322A	
MHW1222	Amperex	BGY57	
	TRW-LSI	CA2301	
MHW1341	Amperex	BGY58A	
	Motorola	MHW1342	
	TRW-LSI	CA2622	
		CA3600	
MHW1342	Amperex	BGY58A	
	Motorola	MHW1341	
	TRW-LSI	CA2622	
		CA3600	
MHW3171	Amperex	BGY54A	
	TRW-LSI	AMPEREX	
MHW3172	Amperex	BGY55A	
	TRW-LSI	CA3200	
MHW4171	Amperex	BGY74	
	Motorola	MHW5171	
	TRW-LSI	CA4100	
		CA4101	
MHW4172	Amperex	BGY75	
	Motorola	MHW5172	
	TRW-LSI	CA4200	
		CA4201	
MHW4342	Amperex	BGY78	
	Motorola	MHW5342	
	TRW-LSI	CA4600	
		CA5600	
MHW5171	Amperex	BGY74	
	Motorola	MHW4171	
	TRW-LSI	CA4100	
		CA4101	
MHW5172	Amperex	BGY75	
	Motorola	MHW4172	
	TRW-LSI	CA4200	
		CA4201	
MHW5342	Amperex	BGY78	
	Motorola	MHW4342	
	TRW-LSI	CA4600	
		CA5600	
MM2316	AMD	AM9218	
	Fairchild	3516	
		68316	
		F3516	
		F35316	
		F68316	**1464**
	GI	R03-9316	
	GTEMicro	2316	
	Intel	2316	
	Mostek	MK34000	
	Motorola	MCM68316	
		MCM68A316	
	National	MM52116	
		MM5258	
	NCR	2316	
		NCR2316	
	NEC	μPD2316	
	OKI	**MSM2916**	**4118**
	Rockwell	R2316	
	SGS	M2316	
	TI	SBP8316	
	Toshiba	TMM331A	
		TMM334	
♦MMH0026	AMD	MMH0026	
	Intersil	**ICL7667**	**3013**
	National	DS0026	
		MH0026	
MQ3724	Fairchild	FQ3724	
	Raytheon	SP3724	
	RCA	CA3724	
MQ3725	Fairchild	FQ3725	
	National	DH3725	
	Raytheon	SP3725	
	RCA	CA3725	
NE592	Fairchild	μA733	
	Hitachi	HA17733	
	Intersil	μA733	
	Motorola	MC1733	
	National	LM733	
	Signetics	μA733	
	SiliconG	SG733	
	TI	μA733	
OP-24G	PMI	OP-24	
RC1558	AMD	AM1558	
	Exar	XR1558	
	Fairchild	μA1558	
	Harris	**HA-2650**	**3414**

(Continued)

Manufacturer Device	Replacement Source	Device	IC Master Page
RC1558	Motorola	MC1558	
		MC4558	
	National	LM1558	
	PMI	**OP-14**	**3566**
		PM1558	
	Raytheon	RC1558	
		RM1558	
		RM4558	
	RCA	CA1558	
		LM1558	
		SSS1558	
	Signetics	MC1558	
	SiliconG	SG1558	
	TI	MC1558	
		RM4558	
RC4558	AMD	AM1458	
	Exar	XR1458	
		XR4558	
	Fairchild	μA1458	
	Harris	HA-2655	
	Hitachi	HA17458	
	MicroPwr	MPOP14	
	Motorola	MC1458	
		MC4558C	
	National	LM1458	
	NEC	μPC1458	
		μPC4558	
	PMI	PM1458	
	Raytheon	RC1458	
		RC4558	**3592**
	RCA	CA1458	
		LM1458	
		RC4558	
		SSS1458	
	Sanyo	LA6458A	
	Signetics	MC1458	
		NE4558	
	SiliconG	SG1458	
	TI	MC1458	
		RC4558	
SE592	Intersil	SE592	
	Signetics	**SE592**	**3675**
SG1525A	**Exar**	**XR1525A**	**3381**
	SiliconG	SG1525A	
	Siliconix	**PWM25A**	**3081**
	Sprague	ULS-8125	
	TI	SG1525A	
	Unitrode	**UC1525A**	**3709**
SG1527A	SiliconG	SG1527A	
	Siliconix	**PWM27A**	**3081**
	Sprague	ULS-8125	
	TI	SG1527A	
	Unitrode	**UC1527A**	**3709**
SG2525A	**Exar**	**XR2525A**	**3381**
	SiliconG	SG2525A	
	Siliconix	PWM25B	
	Siltronics	PWM25B	
	Sprague	ULQ-8125	
SG2526	SiliconG	SG2526	
	Sprague	ULQ-8126	
	Unitrode	UC2526	
SG2527A	**Exar**	**XR2527A**	**3381**
	SiliconG	SG2527A	
	Siliconix	PWM27B	
	Siltronics	PWM27B	
	Sprague	ULQ-8127	
	Unitrode	UC2527	
SG3525A	**Exar**	**XR3525A**	**3381**
	SiliconG	SG3525A	
	Siliconix	**PWM25C**	**3081**
	TI	SG3525A	
SG3527A	**Exar**	**XR3527A**	**3381**
	SiliconG	SG3527A	
	Siliconix	**PWM27C**	**3081**
	TI	SG3527A	
SN54ALS00	National	DM54ALS00	
	TI	SN54ALS00	
SN54ALS02	National	DM54ALS02	
	TI	**SN54ALS02**	**920**
SN54ALS04	National	DM54ALS04	
	TI	**SN54ALS04**	**921**
SN54ALS08	National	DM54ALS08	
	TI	**SN54ALS08**	**921**
SN54ALS09	National	DM54ALS09	
	TI	**SN54ALS09**	**923**
SN54ALS160	National	DM54ALS160	
	TI	**SN54ALS160**	**977**
SN54ALS161	National	DM54ALS161	
	TI	**SN54ALS161**	**977**
SN54ALS162	National	DM54ALS162	
	TI	**SN54ALS162**	**978**

Manufacturer Device	Replacement Source	Device	IC Master Page
SN54ALS163	National	DM54ALS163	
	TI	**SN54ALS163**	**978**
SN54ALS240	National	DM54ALS240	
	TI	**SN54ALS240**	**998**
SN54ALS241	National	DM54ALS241	
	TI	**SN54ALS241**	**999**
SN54ALS242	National	DM54ALS242	
	TI	**SN54ALS242**	**999**
SN54ALS243	National	DM54ALS243	
	TI	**SN54ALS243**	**1000**
SN54ALS244	National	DM54ALS244	
	TI	**SN54ALS244**	**1000**
SN54ALS245	National	DM54ALS245	
	TI	**SN54ALS245**	**1001**
SN54ALS273	National	DM54ALS273	
	TI	**SN54ALS273**	**1007**
SN54ALS32	National	DM54ALS32	
	TI	**SN54ALS32**	**930**
SN54ALS373	National	DM54ALS373	
	TI	**SN54ALS373**	**1025**
SN54ALS374	National	DM54ALS374	
	TI	**SN54ALS374**	**1026**
SN54ALS377	National	DM54ALS377	
SN54ALS573	National	DM54ALS573	
	TI	**SN54ALS573**	**1054**
SN54ALS574	National	DM54ALS574	
	TI	**SN54ALS574**	**1054**
SN54ALS576	National	DM54ALS576	
	TI	**SN54ALS576**	**1055**
SN54ALS580	National	DM54ALS580	
	TI	**SN54ALS580**	**1056**
SN54ALS620	National	DM54ALS620	
	TI	**SN54ALS620**	**1066**
SN54ALS621	National	DM54ALS621	
	TI	**SN54ALS621**	**1066**
SN54ALS622	National	DM54ALS622	
SN54ALS623	National	DM54ALS623	
	TI	**SN54ALS623**	**1066**
SN54ALS640	National	DM54ALS640	
	TI	**SN54ALS640**	**1074**
SN54ALS641	National	DM54ALS641	
	TI	**SN54ALS641**	**1074**
SN54ALS642	National	DM54ALS642	
	TI	**SN54ALS642**	**1074**
SN54ALS643	National	DM54ALS643	
	TI	**SN54ALS643**	**1074**
SN54ALS644	National	DM54ALS644	
	TI	**SN54ALS644**	**1074**
SN54ALS646	National	DM54ALS646	
SN54ALS647	National	DM54ALS647	
SN54ALS648	National	DM54ALS648	
SN54ALS649	National	DM54ALS649	
SN54ALS690	National	DM54ALS690	
SN54ALS691	National	DM54ALS691	
SN54ALS692	National	DM54ALS692	
SN54ALS693	National	DM54ALS693	
SN54ALS696	National	DM54ALS696	
SN54ALS697	National	DM54ALS697	
SN54ALS698	National	DM54ALS698	
SN54ALS699	National	DM54ALS699	
SN54ALS74	National	DM54ALS74	
	TI	**SN54ALS74**	**945**
SN54ALS873	National	DM54ALS873	
	TI	**SN54ALS873**	**1106**
SN54ALS874	National	DM54ALS874	
	TI	**SN54ALS874**	**1106**
SN54ALS876	National	DM54ALS876	
	TI	**SN54ALS876**	**1107**
SN54ALS880	National	DM54ALS880	
	TI	**SN54ALS880**	**1109**
SN54LS00	Fairchild	54LS00	
	National	DM54LS00	
	Signetics	**54LS00**	**529**
	TI	**SN54LS00**	**920**
SN54LS01	Fairchild	54LS01	
	National	DM54LS01	
	TI	**SN54LS01**	**920**
SN54LS02	Fairchild	54LS02	
	National	DM54LS02	
	Signetics	**54LS02**	**529**
	TI	**SN54LS02**	**920**
SN54LS03	Fairchild	54LS03	
	National	DM54LS03	
	TI	**SN54LS03**	**921**
SN54LS04	Fairchild	54LS04	
	National	DM54LS04	
	Signetics	**54LS04**	**529**
	TI	**SN54LS04**	**921**
SN54LS05	Fairchild	54LS05	
	National	DM54LS05	
	TI	**SN54LS05**	**921**

Manufacturer Device	Replacement Source	Device	IC Master Page
SN54LS08	Fairchild	54LS08	
	National	DM54LS08	
	Signetics	**54LS08**	**529**
	TI	**SN54LS08**	**922**
SN54LS09	Fairchild	54LS09	
	National	DM54LS09	
	TI	**SN54LS09**	**923**
SN54LS10	Fairchild	54LS10	
	National	DM54LS10	
	Signetics	**54LS10**	**529**
	TI	**SN54LS10**	**923**
SN54LS107A	National	DM54LS107A	
	TI	SN54LS107	
	TI	**SN54LS107A**	**957**
SN54LS109A	Fairchild	54LS109	
	National	DM54LS109	
		DM54LS109A	
	Signetics	54LS109	
	TI	SN54LS109	
	TI	**SN54LS109A**	**958**
SN54LS11	Fairchild	54LS11	
	National	DM54LS11	
	TI	**SN54LS11**	**923**
SN54LS112A	Fairchild	54LS112	
	National	DM54LS112	
	Signetics	54LS112	
	TI	SN54LS112	
	TI	**SN54LS112A**	**959**
SN54LS113A	Fairchild	54LS113	
	National	DM54LS113	
	Signetics	54LS113	
	TI	SN54LS113	
		SN54LS113A	
SN54LS114A	Fairchild	54LS114	
	National	DM54LS114	
		DM54LS114A	
	TI	SN54LS114	
	TI	**SN54LS114A**	**960**
SN54LS12	National	DM54LS12	
	TI	**SN54LS12**	**924**
SN54LS122	National	DM54LS122	
	TI	**SN54LS122**	**961**
SN54LS123	National	DM54LS123	
	TI	**SN54LS123**	**962**
SN54LS125A	National	DM54LS125	
	Signetics	54LS125A	
	TI	**SN54LS125A**	**962**
SN54LS126A	Fairchild	54LS126	
	National	DM54LS126	
	Signetics	54LS126A	
	TI	SN54LS126	
	TI	**SN54LS126A**	**962**
SN54LS13	Fairchild	54LS13	
	National	DM54LS13	
	TI	**SN54LS13**	**924**
		SN54S13	
SN54LS132	National	DM54LS132	
	Signetics	**54LS132**	**529**
	TI	**SN54LS132**	**965**
SN54LS133	Fairchild	54LS133	
SN54LS136	Fairchild	54LS136	
	National	DM54LS136	
	Signetics	54LS136	
	TI	**SN54LS136**	**966**
SN54LS137	**TI**	**SN54LS137**	**967**
SN54LS138	Fairchild	54LS138	
	National	DM54LS138	
	Signetics	**54LS138**	**529**
	TI	**SN54LS138**	**968**
SN54LS139	Fairchild	54LS139	
	National	DM54LS139	
	Signetics	**54LS139**	**529**
	TI	**SN54LS139**	**968**
SN54LS14	Fairchild	54LS14	
	National	DM54LS14	
	Signetics	**54LS14**	**529**
	TI	**SN54LS14**	**924**
SN54LS145	Fairchild	54LS145	
	TI	**SN54LS145**	**970**
SN54LS147	**TI**	**SN54LS147**	**970**
SN54LS148	**TI**	**SN54LS148**	**971**
SN54LS15	Fairchild	54LS15	
	National	DM54LS15	
	TI	**SN54LS15**	**925**
SN54LS151	Fairchild	54LS151	
	National	DM54LS151	
	Signetics	54LS151	
	TI	**SN54LS151**	**972**
SN54LS153	Fairchild	54LS153	
	National	DM54LS153	
	Signetics	**54LS153**	**529**
	TI	**SN54LS153**	**972**

♦ Discontinued

The manufacturers report their devices can be used as direct replacements.
Performance details often differ, so compare the specifications considering your requirements.

Motorola Semiconductor Products (Cont'd)

Manufacturer Device	Replacement Source	Device	IC Master Page
SN54LS155	Fairchild	54LS155	
	National	DM54LS155	
	TI	**SN54LS155**	**974**
SN54LS156	Fairchild	54LS156	
	National	DM54LS156	
	TI	**SN54LS156**	**974**
SN54LS157	Fairchild	54LS157	
	National	DM54LS157	
	Signetics	**54LS157**	**529**
	TI	**SN54LS157**	**975**
SN54LS158	Fairchild	54LS158	
	National	DM54LS158	
	Signetics	54LS158	
	TI	**SN54LS158**	**975**
SN54LS160A	Signetics	54LS160A	
	TI	**SN54LS160A**	**977**
SN54LS161A	Fairchild	54LS161A	
	National	DM54LS161A	
	Signetics	**54LS161A**	**529**
	TI	**SN54LS161A**	**977**
SN54LS162A	National	DM54LS162A	
	Signetics	54LS162A	
	TI	**SN54LS162A**	**978**
SN54LS163A	National	DM54LS163A	
	Signetics	**54LS163A**	**529**
	TI	**SN54LS163A**	**978**
SN54LS164	Fairchild	54LS164	
	National	DM54LS164	
	Signetics	**54LS164**	**529**
	TI	**SN54LS164**	**979**
SN54LS164A	National	DM54LS164A	
	TI	SN54LS164A	
SN54LS165	Fairchild	54LS165	
	TI	**SN54LS165**	**979**
SN54LS166	**TI**	**SN54LS166**	**979**
SN54LS168	Fairchild	54LS168	
	National	DM54LS168	
	TI	SN54LS168	
SN54LS169	Fairchild	54LS169	
	National	DM54LS169	
	TI	SN54LS169	
SN54LS170	Fairchild	54LS170	
	National	DM54LS170	
	TI	**SN54LS170**	**981**
SN54LS173A	Fairchild	54LS173	
	National	DM54LS173	
	Signetics	54LS173	
	TI	**SN54LS173A**	**982**
SN54LS174	Fairchild	54LS174	
	National	DM54LS174	
	Signetics	**54LS174**	**529**
	TI	**SN54LS174**	**983**
SN54LS175	Fairchild	54LS175	
	National	DM54LS175	
	Signetics	**54LS175**	**529**
	TI	**SN54LS175**	**983**
SN54LS181	Fairchild	54LS181	
	Signetics	54LS181	
	TI	**SN54LS181**	**985**
SN54LS182	TI	SN54LS182	
SN54LS190	National	DM54LS190	
	Signetics	**54LS190**	**529**
	TI	**SN54LS190**	**989**
SN54LS191	National	DM54LS191	
	Signetics	**54LS191**	**529**
	TI	**SN54LS191**	**989**
SN54LS192	Fairchild	54LS192	
	National	DM54LS192	
	Raytheon	54LS192	
	Signetics	**54LS192**	**530**
	TI	**SN54LS192**	**990**
SN54LS193	Fairchild	54LS193	
	National	DM54LS193	
	Signetics	**54LS193**	**530**
	TI	**SN54LS193**	**990**
SN54LS194A	Fairchild	54LS194A	
	TI	**SN54LS194A**	**990**
SN54LS195A	Fairchild	54LS195A	
	Signetics	**54LS195A**	**530**
	TI	**SN54LS195A**	**991**
SN54LS196	National	DM54LS196	
	TI	**SN54LS196**	**991**
SN54LS197	National	DM54LS197	
	Signetics	**54LS197**	**530**
	TI	**SN54LS197**	**992**
SN54LS20	Fairchild	54LS20	
	National	DM54LS20	
	Signetics	**54LS20**	**529**
	TI	**SN54LS20**	**926**
SN54LS21	Fairchild	54LS21	
	National	DM54LS21	
	TI	**SN54LS21**	**927**
SN54LS22	Fairchild	54LS22	
	National	DM54LS22	
	TI	**SN54LS22**	**927**
SN54LS221	National	DM54LS221	
	Signetics	54LS221	
	TI	**SN54LS221**	**994**
SN54LS240	Fairchild	54LS240	
	MMI	**SN54LS240**	**804**
	TI	SN54LS240	
SN54LS241	Fairchild	54LS241	
	MMI	**SN54LS241**	**804**
	TI	SN54LS241	
SN54LS242	TI	SN54LS242	
SN54LS243	TI	SN54LS243	
SN54LS244	Fairchild	54LS244	
	MMI	**SN54LS244**	**804**
	TI	SN54LS244	
SN54LS245	Fairchild	54LS245	
	MMI	**SN54LS245**	**804**
	National	DM54LS245	
	Signetics	**54LS245**	**530**
	TI	SN54LS245	
SN54LS247	Fairchild	54LS247	
	National	DM54LS247	
	TI	**SN54LS247**	**1001**
SN54LS248	Fairchild	54LS248	
	National	DM54LS248	
	Signetics	54LS248	
	TI	**SN54LS248**	**1002**
SN54LS249	Fairchild	54LS249	
	National	DM54LS249	
	TI	**SN54LS249**	**1002**
SN54LS251	Fairchild	54LS251	
	Signetics	54LS251	
	TI	**SN54LS251**	**1003**
SN54LS253	Fairchild	54LS253	
	National	DM54LS253	
		DM7214	
	Signetics	54LS253	
	TI	**SN54LS253**	**1003**
SN54LS256	Fairchild	54LS256	
SN54LS257A	**TI**	**SN54LS257A**	**1004**
SN54LS258A	Fairchild	54LS258A	
	TI	**SN54LS258A**	**1005**
SN54LS259	Fairchild	54LS259	
	TI	**SN54LS259**	**1005**
SN54LS26	Fairchild	54LS26	
	National	DM54LS26	
	TI	**SN54LS26**	**928**
SN54LS260A	Fairchild	54LS260	
	Signetics	54LS260A	
SN54LS266	Fairchild	54LS266	
		9386	
	National	DM54LS266	
	Signetics	**54LS266**	**530**
	TI	**SN54LS266**	**1007**
SN54LS27	Fairchild	54LS27	
	National	DM54LS27	
	TI	**SN54LS27**	**929**
SN54LS273	AMD	AM25LS273M	
	Fairchild	54LS273	
	MMI	**SN54LS273**	**804**
	Signetics	**54LS273**	**530**
	TI	**SN54LS273**	**1007**
SN54LS279	Fairchild	54LS279	
	National	DM54LS279	
	Signetics	54LS279	
	TI	**SN54LS279**	**1009**
SN54LS28	Fairchild	54LS28	
	Signetics	**54LS194A**	**530**
		54LS28	
	TI	**SN54LS28**	**929**
SN54LS280	**TI**	**SN54LS280**	**1009**
SN54LS283	Fairchild	54LS283	
	National	DM54LS283	
	Signetics	54LS283	
	TI	**SN54LS283**	**1011**
SN54LS290	National	DM54LS290	
	Signetics	**54LS290**	**530**
	TI	**SN54LS290**	**1012**
SN54LS293	Fairchild	54LS293	
	National	DM54LS293	
	Signetics	**54LS293**	**530**
	TI	**SN54LS293**	**1014**
SN54LS295A	**TI**	**SN54LS295B**	**1014**
SN54LS298	AMD	SN54LS298	
	Fairchild	54LS298	
	TI	**SN54LS298**	**1015**
SN54LS299	AMD	SN54LS299	
	Fairchild	54LS299	
	MMI	54LS299	
	TI	**SN54LS299**	**1016**
SN54LS30	Fairchild	54LS30	
	National	DM54LS30	
	Signetics	54LS30	
	TI	**SN54LS30**	**929**
SN54LS32	Fairchild	74LS32	
	Hitachi	HD74LS32	
	Motorola	SN74LS32	
	National	DM74LS32	
	SGS	T74LS32	
	Signetics	74LS32	
	TI	**SN74LS32**	**930**
SN54LS322	AMD	SN54LS322	
	TI	SN54LS322	
SN54LS323	AMD	SN54LS323	
	Fairchild	54LS323	
	TI	SN54LS323A	
SN54LS33	Fairchild	54LS33	
	TI	**SN54LS33**	**930**
SN54LS352	Fairchild	54LS352	
	National	DM54LS352	
	TI	**SN54LS352**	**1020**
SN54LS353	Fairchild	54LS353	
	National	DM54LS353	
	TI	**SN54LS353**	**1021**
SN54LS365A	Fairchild	54LS365A	
	Signetics	54LS365	
		54LS365A	**530**
	TI	SN54LS265A	
		SN54LS365A	**1023**
SN54LS366A	Fairchild	54LS366A	
	National	DM54LS366	
	Signetics	54LS366A	
	TI	**SN54LS366A**	**1023**
SN54LS367A	Fairchild	54LS367A	
	National	DM54LS367	
	Signetics	54LS367	
		54LS367A	**530**
	TI	**SN54LS367A**	**1024**
SN54LS368A	Fairchild	54LS368A	
	National	DM54LS368	
	Signetics	54LS368	
		54LS368A	**530**
	TI	**SN54LS368A**	**1024**
SN54LS37	Fairchild	54LS37	
	National	DM54LS37	
	Signetics	**54LS37**	**529**
	TI	**SN54LS37**	**932**
SN54LS373	**MMI**	**SN54LS373**	**804**
	Signetics	**54LS373**	**530**
	TI	**SN54LS373**	**1025**
SN54LS374	**MMI**	**SN54LS374**	**804**
	National	DM54LS374	
	TI	**SN54LS374**	**1026**
SN54LS375	Fairchild	54LS375	
	Signetics	**54LS375**	**530**
	TI	**SN54LS375**	**1026**
SN54LS377	AMD	AM25LS377M	
	Fairchild	54LS377	
	MMI	**SN54LS377**	**804**
	Signetics	**54LS377**	**530**
	TI	**SN54LS377**	**1027**
SN54LS378	AMD	SN54LS378	
	Fairchild	54LS378	
	TI	**SN54LS378**	**1027**
SN54LS379	AMD	SN54LS379	
	Fairchild	54LS379	
	TI	**SN54LS379**	**1028**
SN54LS38	Fairchild	54LS38	
	National	DM54LS38	
	TI	**SN54LS38**	**932**
SN54LS385	AMD	SN54LS385	
	TI	**SN54LS385**	**1030**
SN54LS386	National	DM54LS386	
	Raytheon	RM8241	
	Signetics	S82S41	
	TI	**SN54LS386**	**1030**
SN54LS390	Fairchild	54LS390	
	TI	**SN54LS390**	**1031**
SN54LS393	Fairchild	54LS393	
	TI	**SN54LS393**	**1031**
SN54LS395	National	DM54LS395	
	Signetics	54LS395	
	TI	SN54LS395	
		SN54LS395A	**1031**
SN54LS398	**TI**	**SN54LS398**	**1032**
SN54LS399	AMD	SN54LS399	
	Fairchild	54LS399	
	TI	**SN54LS399**	**1032**
SN54LS40	Fairchild	54LS40	
	National	DM54LS40	
	TI	**SN54LS40**	**933**
SN54LS42	Fairchild	54LS42	
	National	DM54LS42	
	Signetics	**54LS42**	**529**
	TI	**SN54LS42**	**933**
SN54LS47	Fairchild	54LS47	
	National	DM54LS47	
	TI	**SN54LS47**	**935**
SN54LS48	Fairchild	54LS48	
	National	DM54LS48	
	TI	**SN54LS48**	**935**
SN54LS49	Fairchild	54LS49	
	National	DM54LS49	
	TI	**SN54LS49**	**935**
SN54LS490	Fairchild	54LS490	
	TI	**SN54LS490**	**1043**
SN54LS51	Fairchild	54LS51	
	National	DM54LS51	
	Signetics	54LS51	
	TI	**SN54LS51**	**936**
SN54LS54	Fairchild	54LS54	
	National	DM54LS54	
	TI	**SN54LS54**	**938**
SN54LS540	**TI**	**SN54LS540**	**1050**
SN54LS55	Fairchild	54LS55	
	National	DM54LS55	
	TI	**SN54LS55**	**939**
SN54LS568	AMD	SN54LS568	
SN54LS569	AMD	SN54LS569	
SN54LS604	**TI**	**SN54LS604**	**1063**
SN54LS605	**TI**	**SN54LS605**	**1063**
SN54LS606	**TI**	**SN54LS606**	**1063**
SN54LS607	**TI**	**SN54LS607**	**1063**
SN54LS620	**TI**	**SN54LS620**	**1066**
SN54LS621	**TI**	**SN54LS621**	**1066**
SN54LS622	**TI**	**SN54LS622**	**1066**
SN54LS623	**TI**	**SN54LS623**	**1066**
SN54LS640	**TI**	**SN54LS640**	**1074**
SN54LS641	**TI**	**SN54LS641**	**1074**
SN54LS642	**TI**	**SN54LS642**	**1074**
SN54LS644	**TI**	**SN54LS644**	**1074**
SN54LS645	**MMI**	**SN54LS645**	**804**
	TI	**SN54LS645**	**1074**
SN54LS668	**TI**	**SN54LS668**	**1080**
SN54LS669	**TI**	**SN54LS669**	**1080**
SN54LS670	Fairchild	54LS670	
	National	DM54LS670	
	Signetics	**54LS670**	**530**
	TI	**SN54LS670**	**1080**
SN54LS673	**TI**	**SN54LS673**	**1082**
SN54LS674	**TI**	**SN54LS674**	**1082**
SN54LS73A	National	DM54LS73	
		DM54LS73A	
	Signetics	**54LS73**	**529**
	TI	SN54LS73	
		SN54LS73A	**944**
SN54LS74A	Fairchild	54LS74	
	National	DM54LS74	
		DM54LS74A	
	Signetics	54LS74	
	TI	SN54LS74	
		SN54LS74A	
			945,946
SN54LS75	National	DM54LS75	
	Signetics	**54LS75**	**529**
	TI	SN54LS75	
SN54LS76A	National	DM54LS76	
	Signetics	54LS76	
	TI	SN54LS76	
		SN54LS76A	**946**
SN54LS77	National	DM54LS77	
	TI	**SN54LS77**	**947**
SN54LS78A	National	DM54LS78	
	TI	SN54LS78	
		SN54LS78A	**947**
SN54LS795	TI	SN54LS795	
SN54LS796	TI	SN54LS796	
SN54LS83A	Fairchild	54LS83A	
	National	DM54LS83A	
	Signetics	54LS83	
		54LS83A	
	TI	**SN54LS83A**	**949**
SN54LS85	Fairchild	54LS85	
	National	DM54LS85	
	Signetics	**54LS85**	**529**
	TI	**SN54LS85**	**950**
SN54LS86	National	DM54LS86	
	Signetics	**54LS86**	**529**
	TI	**SN54LS86**	**950**
SN54LS89	Signetics	54LS89	

◆ Discontinued

Bold face device numbers indicate manufacturers data is provided in the IC Master on the pages noted.

ALTERNATE SOURCE DIRECTORY

© IC MASTER 1984

Motorola Semiconductor Products (Cont'd)

Manufacturer Device	Replacement Source	Device	IC Master Page
SN54LS90	National	DM54LS90	
	Signetics	**54LS90**	**529**
	TI	**SN54LS90**	**952**
SN54LS91	TI	**SN54LS91**	**952**
SN54LS92	National	DM54LS92	
	Signetics	54LS92	
	TI	**SN54LS92**	**952**
SN54LS93	Fairchild	54LS93	
	National	DM54LS93	
	Signetics	**54LS93**	**529**
	TI	**SN54LS93**	**953**
SN54LS95B	Fairchild	54LS95B	
	National	DM54LS95B	
	Signetics	**54LS95B**	**529**
	TI	**SN54LS95B**	**954**
SN74ALS00	National	DM74ALS00	
	TI	SN74ALS00	
SN74ALS02	National	DM74ALS02	
	TI	**SN74ALS02**	**920**
SN74ALS04	National	DM74ALS04	
	TI	**SN74ALS04**	**921**
SN74ALS08	National	DM74ALS08	
	TI	**SN74ALS08**	**922**
SN74ALS09	National	DM74ALS09	
	TI	**SN74ALS09**	**923**
SN74ALS160	National	DM74ALS160	
	TI	**SN74ALS160**	**977**
SN74ALS161	National	DM74ALS161	
	TI	**SN74ALS161**	**977**
SN74ALS162	National	DM74ALS162	
	TI	**SN74ALS162**	**978**
SN74ALS163	National	DM74ALS163	
	TI	**SN74ALS163**	**978**
SN74ALS240	National	DM74ALS240	
	TI	**SN74ALS240**	**998**
SN74ALS241	National	DM74ALS241	
	TI	**SN74ALS241**	**999**
SN74ALS242	National	DM74ALS242	
	TI	**SN74ALS242**	**999**
SN74ALS243	National	DM74ALS243	
	TI	**SN74ALS243**	**1000**
SN74ALS244	National	DM74ALS244	
	TI	**SN74ALS244**	**1000**
SN74ALS245	National	DM74ALS245	
	TI	**SN74ALS245**	**1001**
SN74ALS273	National	DM74ALS273	
	TI	**SN74ALS273**	**1007**
SN74ALS32	National	DM74ALS32	
	TI	**SN74ALS32**	**930**
SN74ALS373	National	DM74ALS373	
	TI	**SN74ALS373**	**1025**
SN74ALS374	National	DM74ALS374	
	TI	**SN74ALS374**	**1026**
SN74ALS377	National	DM74ALS377	
SN74ALS573	National	DM74ALS573	
	TI	**SN74ALS573**	**1054**
SN74ALS574	National	DM74ALS574	
	TI	**SN74ALS574**	**1054**
SN74ALS576	National	DM74ALS576	
	TI	**SN74ALS576**	**1055**
SN74ALS580	National	DM74ALS580	
	TI	**SN74ALS580**	**1056**
SN74ALS620	National	DM74ALS620	
	TI	**SN74ALS620**	**1066**
SN74ALS621	National	DM74ALS621	
	TI	**SN74ALS621**	**1066**
SN74ALS622	National	DM74ALS622	
SN74ALS623	National	DM74ALS623	
	TI	**SN74ALS623**	**1066**
SN74ALS640	National	DM74ALS640	
	TI	**SN74ALS640**	**1074**
SN74ALS641	National	DM74ALS641	
	TI	**SN74ALS641**	**1074**
SN74ALS642	National	DM74ALS642	
	TI	**SN74ALS642**	**1074**
SN74ALS643	National	DM74ALS643	
	TI	**SN74ALS643**	**1074**
SN74ALS644	National	DM74ALS644	
	TI	**SN74ALS644**	**1074**
SN74ALS646	National	DM74ALS646	
SN74ALS647	National	DM74ALS647	
SN74ALS648	National	DM74ALS648	
SN74ALS649	National	DM74ALS649	
SN74ALS690	National	DM74ALS690	
SN74ALS691	National	DM74ALS691	
SN74ALS692	National	DM74ALS692	
SN74ALS693	National	DM74ALS693	
SN74ALS697	National	DM74ALS697	
SN74ALS698	National	DM74ALS698	
SN74ALS699	National	DM74ALS699	
SN74ALS74	National	DM74ALS74	
	TI	**SN74ALS74**	**945**
SN74ALS873	National	DM74ALS873	
	TI	**SN74ALS873**	**1106**
SN74ALS874	National	DM74ALS874	
	TI	**SN74ALS874**	**1106**
SN74ALS876	National	DM74ALS876	
	TI	**SN74ALS876**	**1107**
SN74ALS880	National	DM74ALS880	
	TI	**SN74ALS880**	**1109**
SN74LS00	Fairchild	74LS00	
	Hitachi	HD74LS00	
	National	DM74LS00	
	SGS	T74LS00	
	Signetics	74LS00	
	TI	**SN74LS00**	**920**
SN74LS01	Fairchild	74LS01	
	Hitachi	HD74LS01	
	National	DM74LS01	
	Signetics	74LS01	
	TI	**SN74LS01**	**920**
SN74LS02	Fairchild	74LS02	
	Hitachi	HD74LS02	
	National	DM74LS02	
	SGS	T74LS02	
	Signetics	74LS02	
	TI	**SN74LS02**	**920**
SN74LS03	Fairchild	74LS03	
	Hitachi	HD74LS03	
	National	DM74LS03	
	SGS	T74LS03	
	TI	**SN74LS03**	**921**
SN74LS04	Fairchild	74LS04	
	Hitachi	HD74LS04	
	National	DM74LS04	
	SGS	T74LS04	
	Signetics	74LS04	
	TI	**SN74LS04**	**921**
SN74LS05	Fairchild	74LS05	
	Hitachi	HD74LS05	
	National	DM74LS05	
	NEC	μPB74LS05	
	SGS	T74LS05	
	Signetics	74LS05	
	TI	**SN74LS05**	**921**
SN74LS08	Fairchild	74LS08	
	Hitachi	HD74LS08	
	National	DM74LS08	
	SGS	T74LS08	
	Signetics	74LS08	
	TI	**SN74LS08**	**922**
SN74LS09	Fairchild	74LS09	
	Hitachi	HD74LS09	
	National	DM74LS09	
	SGS	T74LS09	
	TI	**SN74LS09**	**923**
SN74LS10	Fairchild	74LS10	
	Hitachi	HD74LS10	
	National	DM74LS10	
	SGS	T74LS10	
	Signetics	74LS10	
	TI	**SN74LS10**	**923**
SN74LS107A	Hitachi	HD74LS107	
	National	DM74LS107	
	Signetics	74LS107	
	TI	SN74LS107	
		SN74LS107A	**957**
SN74LS109	Fairchild	74LS109	
	Hitachi	HD74LS109	
	Motorola	SN74LS109A	
	National	DM74LS109	
	SGS	T74LS109	
	Signetics	74LS109	
	TI	**SN74LS109A**	**958**
SN74LS109A	Fairchild	74LS109	
	Hitachi	HD74LS109	
	Motorola	SN74LS109	
	National	DM74LS109	
	SGS	T74LS109	
	Signetics	74LS109	
	TI	**SN74LS109A**	**958**
SN74LS11	Fairchild	74LS11	
	Hitachi	HD74LS11	
	National	DM74LS11	
	SGS	T74LS11	
	Signetics	74LS11	
	TI	**SN74LS11**	**923**
SN74LS112A	Fairchild	74LS112	
	Hitachi	HD74LS112	
	National	DM74LS112	
	SGS	T74LS112	
		(Continued)	
SN74LS112A	Signetics	74LS112	
	TI	**SN74LS112A**	**959**
SN74LS113A	Fairchild	74LS113	
	Hitachi	HD74LS113	
	National	DM74LS113	
	SGS	T74LS113	
	Signetics	74LS113	
	TI	**SN74LS113A**	**959**
SN74LS114A	Fairchild	74LS114	
	Hitachi	HD74LS114	
	National	DM74LS114	
	SGS	T74LS114	
	TI	**SN74LS114A**	**960**
SN74LS12	Hitachi	HD74LS12	
	National	DM74LS12	
	Signetics	74LS12	
	TI	**SN74LS12**	**924**
SN74LS122	Hitachi	HD74LS122	
	National	DM74LS122	
	TI	**SN74LS122**	**961**
SN74LS123	Hitachi	HD74LS123	
	National	DM74LS123	
	TI	**SN74LS123**	**962**
SN74LS124	TI	SN74LS124	
SN74LS125A	Fairchild	74LS125A	
	National	DM74LS125	
	SGS	T74LS125	
	Signetics	74LS125A	
	TI	**SN74LS125A**	**962**
SN74LS126A	Fairchild	74LS126	
	National	DM74LS126	
	SGS	T74LS126	
	Signetics	74LS126A	
	TI	**SN74LS126A**	**962**
SN74LS13	Fairchild	74LS13	
	Hitachi	HD74LS13	
	National	DM74LS13	
	Signetics	74LS13	
	TI	**SN74LS13**	**924**
SN74LS132	Fairchild	74LS132	
	Hitachi	HD74LS132	
	National	DM74LS132	
	SGS	T74LS132	
	Signetics	74LS132	
	TI	**SN74LS132**	**965**
SN74LS133	Fairchild	74LS133	
SN74LS136	Fairchild	74LS136	
	Hitachi	HD74LS136	
	National	DM74LS136	
	SGS	T74LS136	
	Signetics	74LS136	
	TI	**SN74LS136**	**966**
SN74LS137	**TI**	**SN74LS137**	**967**
SN74LS138	Fairchild	74LS138	
	Hitachi	HD74LS138	
	National	DM74LS138	
	SGS	T74LS138	
	Signetics	74LS138	
	TI	**SN74LS138**	**968**
SN74LS139	Fairchild	74LS139	
	Hitachi	HD74LS139	
	National	DM74LS139	
	SGS	T74LS139	
	Signetics	74LS139	
	TI	**SN74LS139**	**968**
SN74LS14	Fairchild	74LS14	
	Hitachi	HD74LS14	
	National	DM74LS14	
	Signetics	74LS14	
	TI	**SN74LS14**	**924**
SN74LS145	Fairchild	74LS145	
	TI	**SN74LS145**	**970**
SN74LS147	**TI**	**SN74LS147**	**970**
SN74LS148	Hitachi	HD74LS148	
	TI	**SN74LS148**	**971**
SN74LS15	Fairchild	74LS15	
	Hitachi	HD74LS15	
	National	DM74LS15	
	SGS	T74LS15	
	TI	**SN74LS15**	**925**
SN74LS151	Fairchild	74LS151	
	Hitachi	HD74LS151	
		HD74LS151A	
	National	DM74LS151	
	SGS	T74LS151	
	Signetics	74LS151	
	TI	**SN74LS151**	**972**
SN74LS153	Fairchild	74LS153	
	Hitachi	HD74LS153	
	National	DM74LS153	
	SGS	T74LS153	
		(Continued)	
SN74LS153	Signetics	74LS153	
	TI	**SN74LS153**	**972**
SN74LS155	Fairchild	74LS155	
	Hitachi	HD74LS155	
	National	DM74LS155	
	Signetics	74LS155	
	TI	**SN74LS155**	**974**
SN74LS156	Fairchild	74LS156	
	Hitachi	HD74LS156	
	National	DM74LS156	
	SGS	T74LS156	
	Signetics	74LS156	
	TI	**SN74LS156**	**974**
SN74LS157	Fairchild	74LS157	
	Hitachi	HD74LS157	
	National	DM74LS157	
	SGS	T74LS157	
	Signetics	74LS157	
	TI	**SN74LS157**	**975**
SN74LS158	Fairchild	74LS158	
	Hitachi	HD74LS158	
	National	DM74LS158	
	SGS	T74LS158	
	Signetics	74LS158	
	TI	**SN74LS158**	**975**
SN74LS160A	Fairchild	74LS160	
	Hitachi	HD74LS160A	
	National	DM74LS160	
	SGS	T74LS160	
	Signetics	74LS160	
		74LS160A	
	TI	**SN74LS160A**	**977**
SN74LS161A	Fairchild	74LS161A	
	Hitachi	HD74LS161A	
	National	DM74LS161	
	NEC	μPB74LS161	
	SGS	T74LS161	
	Signetics	74LS161A	
	TI	**SN74LS161A**	**977**
SN74LS162A	Fairchild	74LS162	
	Hitachi	HD74LS162A	
	National	DM74LS162	
	SGS	T74LS162	
	Signetics	74LS162A	
	TI	**SN74LS162A**	**978**
SN74LS163A	Fairchild	74LS163	
	Hitachi	HD74LS163	
		HD74LS163A	
	National	DM74LS163	
	SGS	T74LS163	
	Signetics	74LS163A	
	TI	**SN74LS163A**	**978**
SN74LS164A	Fairchild	74LS164	
	Hitachi	HD74LS164	
	National	DM74LS164	
	SGS	T74LS164	
	Signetics	74LS164	
		74LS164A	
	TI	**SN74LS164**	**979**
SN74LS165	Fairchild	74LS165	
	SGS	T74LS165	
	TI	**SN74LS165**	**979**
SN74LS166	TI	SN74LS166A	
SN74LS168	Fairchild	74LS168	
	Hitachi	HD74LS168	
	National	DM74LS168	
	Signetics	74LS168A	
	TI	SN74LS168	
SN74LS169	Fairchild	74LS169	
	Hitachi	HD74LS169	
	National	DM74LS169	
	Signetics	74LS169A	
SN74LS170	Fairchild	74LS170	
	National	DM74LS170	
	SGS	T74LS170	
	Signetics	74LS170	
	TI	**SN74LS170**	**981**
SN74LS173A	Fairchild	74LS173	
	National	DM74LS173	
	SGS	T74LS173	
	Signetics	74LS173	
	TI	**SN74LS173A**	**982**
SN74LS174	Fairchild	74LS174	
	Hitachi	HD74LS174	
	National	DM74LS174	
	SGS	T74LS174	
	Signetics	74LS174	
	TI	**SN74LS174**	**983**
SN74LS175	Fairchild	74LS175	
	Hitachi	HD74LS175	
	SGS	T74LS175	
		(Continued)	

◆ Discontinued

The manufacturers report their devices can be used as direct replacements.
Performance details often differ, so compare the specifications considering your requirements.

Motorola Semiconductor Products (Cont'd)

Manufacturer Device	Replacement Source	Device	IC Master Page
SN74LS175	Signetics	74LS175	
	TI	**SN74LS175**	**983**
SN74LS181	Fairchild	74LS181	
	Hitachi	HD74LS181	
	SGS	T74LS181	
	Signetics	74LS181	
	TI	**SN74LS181**	**985**
SN74LS182	TI	SN74LS182	
SN74LS183	TI	**SN74LS183**	**986**
SN74LS190	Fairchild	74LS190	
	Hitachi	HD74LS190	
	National	DM74LS190	
	SGS	T74LS190	
	TI	**SN74LS190**	**989**
SN74LS191	Fairchild	74LS191	
	Hitachi	HD74LS191	
	National	DM74LS191	
	SGS	T74LS191	
	Signetics	74LS191	
	TI	**SN74LS191**	**989**
SN74LS192	Fairchild	74LS192	
	Hitachi	HD74LS192	
	National	DM74LS192	
	SGS	T74LS192	
	Signetics	74LS192	
	TI	**SN74LS192**	**990**
SN74LS193	Fairchild	74LS193	
	Hitachi	HD74LS193	
	National	DM74LS193	
	SGS	T74LS193	
	Signetics	74LS193	
	TI	**SN74LS193**	**990**
SN74LS194A	Fairchild	74LS194A	
	Hitachi	HD74LS194A	
	National	DM74LS194	
	SGS	T74LS194A	
	Signetics	74LS194A	
	TI	**SN74LS194A**	**990**
SN74LS195A	Fairchild	74LS195A	
	Hitachi	HD74LS195A	
	National	DM74LS195	
	SGS	T74LS195A	
	Signetics	74LS195A	
	TI	**SN74LS195A**	**991**
SN74LS196	Fairchild	74LS196	
	Hitachi	HD74LS196	
	National	DM74LS196	
	Signetics	N82S80	
	TI	**SN74LS196**	**991**
SN74LS197	Fairchild	74LS197	
	Hitachi	HD74LS197	
	National	DM74LS197	
	Signetics	74LS197	
	TI	**SN74LS197**	**992**
SN74LS20	Fairchild	74LS20	
	Hitachi	HD74LS20	
	National	DM74LS20	
	SGS	T74LS20	
	Signetics	74LS20	
	TI	**SN74LS20**	**926**
SN74LS21	Fairchild	74LS21	
	Hitachi	HD74LS21	
	National	DM74LS21	
	SGS	T74LS21	
	Signetics	74LS21	
	TI	**SN74LS21**	**927**
SN74LS22	Fairchild	74LS22	
	Hitachi	HD74LS22	
	National	DM74LS22	
	SGS	T74LS22	
	TI	**SN74LS22**	**927**
SN74LS221	Fairchild	74LS221	
	Hitachi	HD74LS221	
	National	DM74LS221	
	TI	**SN74LS221**	**994**
SN74LS240	Fairchild	74LS240	
	Hitachi	HD74LS240	
	MMI	**SN74LS240**	**804**
	Signetics	74LS240	
	TI	SN74LS240	
SN74LS241	Fairchild	74LS241	
	Hitachi	HD74LS241	
	MMI	**SN74LS241**	**804**
	Signetics	74LS241	
	TI	SN74LS241	
SN74LS242	Fairchild	74LS242A	
	Signetics	74LS242	
	TI	SN74LS242	
SN74LS243	Fairchild	74LS243A	
	Signetics	74LS243	
	TI	SN74LS243	
SN74LS244	Fairchild	74LS244	
	Hitachi	HD74LS244	
	MMI	**SN74LS244**	**804**
	Signetics	74LS244	
	TI	SN74LS244	
SN74LS245	Fairchild	74LS245	
	GTEMicro	G74SC245	
	Mitel	MD74SC245	
	MMI	**SN74LS245**	**804**
	National	DM74LS245	
	Plessey	MV74SC245	
	SPI	SP74SC245	
	Signetics	74LS245	
		N8T245	**876**
	TI	SN74LS245	
SN74LS247	Fairchild	74LS247	
	Hitachi	HD74LS247	
	National	DM74LS247	
	TI	**SN74LS247**	**1001**
SN74LS248	Fairchild	74LS248	
	Hitachi	HD74LS248	
	National	DM74LS248	
	SGS	T74LS248	
	TI	**SN74LS248**	**1002**
SN74LS249	Fairchild	74LS249	
	Hitachi	HD74LS249	
	National	DM74LS249	
	SGS	T74LS249	
	TI	**SN74LS249**	**1002**
SN74LS251	Fairchild	74LS251	
	Hitachi	HD74LS251	
	National	DM74LS251	
	SGS	T74LS251	
	Signetics	74LS251	
	TI	**SN74LS251**	**1003**
SN74LS253	Fairchild	74LS253	
	Hitachi	HD74LS253	
	National	DM74LS253	
		DM8214	
	SGS	T74LS253	
	Signetics	74LS253	
	TI	**SN74LS253**	**1003**
SN74LS256	Fairchild	74LS256	
	Signetics	74LS256	
SN74LS257A	Fairchild	74LS257A	
	Hitachi	HD74LS257	
	National	DM74LS257	
	SGS	T74LS257	
	Signetics	74LS257	
		74LS257A	
	TI	SN74LS257	
SN74LS258A	Fairchild	74LS258A	
	Hitachi	HD74LS258	
	National	DM74LS258	
	SGS	T74LS258	
	Signetics	74LS258	
	TI	SN74LS258	
SN74LS259	Fairchild	74LS259	
	SGS	T74LS259	
	Signetics	74LS259	
	TI	**SN74LS259**	**1005**
SN74LS26	Fairchild	74LS26	
	Hitachi	HD74LS26	
	National	DM74LS26	
	SGS	T74LS26	
	Signetics	74LS26	
	TI	**SN74LS26**	**928**
SN74LS260	Fairchild	74LS260	
	Signetics	74LS260	
SN74LS266	Fairchild	74LS266	
	National	DM74LS266	
	Raytheon	RC8242	
	SGS	T74LS266	
	Signetics	74LS266	
		N8242	**876**
	TI	**SN74LS266**	**1007**
SN74LS27	Fairchild	74LS27	
	Hitachi	HD74LS27	
	National	DM74LS27	
	SGS	T74LS27	
	Signetics	74LS27	
	TI	**SN74LS27**	**929**
SN74LS273	AMD	**AM25LS273**	**1427**
	Fairchild	74LS273	
	MMI	**SN74LS273**	**804**
	SGS	T74LS273	
	Signetics	74LS273	
	TI	**SN74LS273**	**1007**
SN74LS279	Fairchild	74LS279	
	Hitachi	HD74LS279	
	National	DM74LS279	
	Signetics	74LS279	
	TI	**SN74LS279**	**1009**
SN74LS28	Fairchild	74LS28	
	SGS	T74LS28	
	TI	**SN74LS28**	**929**
SN74LS280	Hitachi	HD74LS280	
	TI	**SN74LS280**	**1009**
SN74LS283	Fairchild	74LS283	
	Hitachi	HD74LS283	
		HD74LS283A	
	National	DM74LS283	
	SGS	T74LS283	
	Signetics	74LS283	
	TI	**SN74LS283**	**1011**
SN74LS290	Fairchild	74LS290	
	Hitachi	HD74LS290	
	National	DM74LS290	
	SGS	T74LS290	
	Signetics	74LS290	
	TI	**SN74LS290**	**1012**
SN74LS293	Fairchild	74LS293	
	Hitachi	HD74LS293	
	National	DM74LS293	
	SGS	T74LS293	
	Signetics	74LS293	
	TI	**SN74LS293**	**1014**
SN74LS295A	Fairchild	74LS295A	
	SGS	T74LS295A	
	Signetics	74LS295A	
		74LS295B	
	TI	**SN74LS295B**	**1014**
SN74LS298	Fairchild	74LS298	
	Hitachi	HD74LS298	
	SGS	T74LS298	
	Signetics	74LS298	
	TI	**SN74LS298**	**1015**
SN74LS299	AMD	SN74LS299	
	Fairchild	74LS299	
	Hitachi	HD74LS299	
	SGS	T74LS299	
	TI	**SN74LS299**	**1016**
SN74LS30	Fairchild	74LS30	
	Hitachi	HD74LS30	
	National	DM74LS30	
	SGS	T74LS30	
	Signetics	74LS30	
	TI	**SN74LS30**	**929**
SN74LS32	Fairchild	74LS32	
	Hitachi	HD74LS32	
	Motorola	SN54LS32	
	National	DM74LS32	
	SGS	T74LS32	
	Signetics	74LS32	
	TI	**SN74LS32**	**930**
SN74LS322	AMD	SN74LS322	
	Fairchild	74LS322	
	TI	**SN74LS322A**	**1018**
SN74LS323	AMD	SN74LS323	
	Fairchild	74LS323	
	TI	**SN54LS323**	**1018**
		SN74LS323	**1018**
SN74LS33	Fairchild	74LS33	
	Signetics	74LS33	
	TI	**SN74LS33**	**930**
SN74LS352	Fairchild	74LS352	
	National	DM74LS352	
	SGS	T74LS352	
	TI	**SN74LS352**	**1020**
SN74LS353	Fairchild	74LS353	
	National	DM74LS353	
	SGS	T74LS353	
	TI	**SN74LS353**	**1021,1022**
SN74LS365A	Fairchild	74LS365A	
	National	DM74LS365	
	SGS	T74LS365A	
	Signetics	74LS365	
		74LS365A	
	TI	**SN74LS365A**	**1023**
SN74LS366A	Fairchild	74LS366A	
	National	DM74LS366	
	SGS	T74LS366A	
	Signetics	74LS366A	
	TI	**SN74LS366A**	**1023**
SN74LS367A	Fairchild	74LS367A	
	Hitachi	HD74LS367	
		HD74LS367A	
	National	DM74LS367	
	SGS	T74LS367A	

(Continued)

Manufacturer Device	Replacement Source	Device	IC Master Page
SN74LS367A	Signetics	74LS367	
		74LS367A	
	TI	**SN74LS367A**	**1024**
SN74LS368A	Fairchild	74LS368A	
	Hitachi	HD74LS368	
	National	DM74LS368	
	SGS	T74LS368	
	Signetics	74LS368	
		74LS368A	
	TI	**SN74LS368A**	**1024**
SN74LS37	Fairchild	74LS37	
	Hitachi	HD74LS37	
	National	DM74LS37	
	SGS	T74LS37	
	Signetics	74LS37	
	TI	**SN74LS37**	**932**
SN74LS373	Fairchild	74LS373	
	MMI	**SN74LS373**	**804**
	SGS	T74LS373	
	Signetics	74LS373	
	TI	**SN74LS373**	**1025**
SN74LS374	Fairchild	74LS374	
	MMI	**SN74LS374**	**804**
	National	DM74LS374	
	SGS	T74LS374	
	Signetics	74LS374	
	TI	**SN74LS374**	**1026**
SN74LS375	Fairchild	74LS375	
	Signetics	74LS375	
	TI	**SN74LS375**	**1026**
SN74LS377	AMD	**AM25LS377**	**1427**
	Fairchild	74LS377	
	MMI	**SN74LS377**	**804**
	SGS	T74LS377	
	Signetics	74LS377	
	TI	**SN74LS377**	**1027**
SN74LS378	AMD	SN74LS378	
	Fairchild	74LS378	
	SGS	T74LS378	
	Signetics	74LS378	
	TI	**SN74LS378**	**1027**
SN74LS379	AMD	SN74LS379	
	Fairchild	74LS379	
	SGS	T74LS379	
	TI	**SN74LS379**	**1028**
SN74LS38	Fairchild	74LS38	
	Hitachi	HD74LS38	
	National	DM74LS38	
	SGS	T74LS38	
	Signetics	74LS38	
	TI	**SN74LS38**	**932**
SN74LS385	AMD	SN74LS385	
	TI	**SN74LS385**	**1030**
SN74LS386	Hitachi	HD74LS386	
	National	DM74LS386	
	TI	**SN74LS386**	**1030**
SN74LS390	Fairchild	74LS390	
	SGS	T74LS390	
	TI	**SN74LS390**	**1031**
SN74LS393	Fairchild	74LS393	
	SGS	T74LS393	
	Signetics	74LS393	
	TI	**SN74LS393**	**1031**
SN74LS395	Fairchild	74LS395	
	National	DM74LS395	
	SGS	T74LS395	
	Signetics	74LS395	
	TI	**SN74LS395A**	**1031**
SN74LS398	TI	**SN74LS398**	**1032**
SN74LS399	AMD	SN74LS399	
	TI	**SN74LS399**	**1032**
SN74LS40	Fairchild	74LS40	
	Hitachi	HD74LS40	
	National	DM74LS40	
	SGS	T74LS40	
	Signetics	74LS40	
	TI	**SN74LS40**	**933**
SN74LS42	Fairchild	74LS42	
	Hitachi	HD74LS42	
	National	DM74LS42	
	SGS	T74LS42	
	Signetics	74LS42	
	TI	**SN74LS42**	**933**
SN74LS47	Fairchild	74LS47	
	Hitachi	HD74LS47	
	National	DM74LS47	
	SGS	T74LS47	
	TI	**SN74LS47**	**935**
SN74LS48	Fairchild	74LS48	
	Hitachi	HD74LS48	
	National	DM74LS48	
	SGS	T74LS48	

(Continued)

◆ Discontinued

Bold face device numbers indicate manufacturers data is provided in the IC Master on the pages noted.

© IC MASTER 1984

Motorola Semiconductor Products (Cont'd)

Manufacturer Device	Replacement Source	Device	IC Master Page
SN74LS48	Signetics	74LS48	
	TI	**SN74LS48**	**935**
SN74LS49	Fairchild	74LS49	
	Hitachi	HD74LS49	
	National	DM74LS49	
	SGS	T74LS49	
	TI	**SN74LS49**	**935**
SN74LS490	Fairchild	74LS490	
	SGS	T74LS490	
	Signetics	74LS490	
	TI	**SN74LS490**	**1043**
SN74LS51	Fairchild	74LS51	
	Hitachi	HD74LS51	
	National	DM74LS51	
	SGS	T74LS51	
	Signetics	74LS51	
	TI	**SN74LS51**	**936**
SN74LS54	Fairchild	74LS54	
	Hitachi	HD74LS54	
	National	DM74LS54	
	SGS	T74LS54	
	Signetics	74LS54	
	TI	**SN74LS54**	**938**
SN74LS540	Fairchild	74LS540	
	Signetics	74LS540	
	TI	**SN74LS540**	**1050**
SN74LS541	Fairchild	74LS541	
	Signetics	74LS541	
	TI	**SN74LS541**	**1050**
SN74LS55	Fairchild	74LS55	
	Hitachi	HD74LS55	
	National	DM74LS55	
	SGS	T74LS55	
	TI	**SN74LS55**	**939**
SN74LS568	AMD	SN74LS568	
	Signetics	74LS568	
SN74LS569	AMD	SN74LS569	
	Signetics	74LS569	
SN74LS604	TI	**SN74LS604**	**1063**
SN74LS605	TI	**SN74LS605**	**1063**
SN74LS606	TI	**SN74LS606**	**1063**
SN74LS607	TI	**SN74LS607**	**1063**
SN74LS621	TI	**SN74LS621**	**1066**
SN74LS622	TI	**SN74LS622**	**1066**
SN74LS640	Signetics	74LS640	
		N8T125	**876**
	TI	**SN74LS640**	**1074**
SN74LS641	Signetics	74LS641	
	TI	**SN74LS641**	**1074**
SN74LS642	Signetics	74LS642	
	TI	**SN74LS642**	**1074**
SN74LS643	TI	**SN74LS643**	**1074**
SN74LS644	TI	**SN74LS644**	**1074**
SN74LS645	**MMI**	**SN74LS645**	**804**
	Signetics	74LS645	
	TI	**SN74LS645**	**1074**
SN74LS668	TI	**SN74LS668**	**1080**
SN74LS669	TI	**SN74LS669**	**1080**
SN74LS670	Fairchild	74LS670	
	National	DM74LS670	
	SGS	T74LS670	
	Signetics	74LS670	
	TI	**SN74LS670**	**1080**
SN74LS673	TI	**SN74LS673**	**1082**
SN74LS674	TI	**SN74LS674**	**1082**
SN74LS696	National	DM74ALS696	
SN74LS73A	Hitachi	HD74LS73	
	National	DM74LS73	
	Signetics	74LS73	
	TI	**SN74LS73A**	**944**
SN74LS74A	Fairchild	74LS74	
	Hitachi	HD74LS74	
		HD74LS74A	
	National	DM74LS74	
	SGS	T74LS74	
	Signetics	74LS74	
	TI	**SN74LS74A**	
			945,946
SN74LS75	Hitachi	HD74LS75	
	National	DM74LS75	
	Signetics	74LS75	
	TI	SN74LS75	
SN74LS76A	Hitachi	HD74LS76	
	National	DM74LS76	
	Signetics	74LS76	
	TI	**SN74LS76A**	**946**
SN74LS78A	Hitachi	HD74LS78	
	National	DM74LS78	
	TI	**SN74LS78A**	**947**
SN74LS795	TI	SN74LS795	
SN74LS796	TI	SN74LS796	
SN74LS83A	Fairchild	74LS83A	
	Hitachi	HD74LS183A	
		HD74LS83A	
	National	DM74LS83A	
	Signetics	74LS83	
		74LS83A	
	TI	**SN74LS83A**	**949**
SN74LS85	Fairchild	74LS85	
	Hitachi	HD74LS85	
	National	DM74LS85	
	Signetics	74LS85	
	TI	**SN74LS85**	**950**
SN74LS86	Fairchild	74LS86	
	Hitachi	HD74LS86	
	National	DM74LS86	
	SGS	T74LS86	
	Signetics	74LS86	
	TI	**SN74LS86**	**950**
SN74LS89	Signetics	74LS89	
SN74LS90	Fairchild	74LS90	
	National	DM74LS90	
	SGS	T74LS90	
	Signetics	74LS90	
	TI	**SN74LS90**	**952**
SN74LS91	Hitachi	HD74LS91	
	TI	**SN74LS91**	**952**
SN74LS92	Fairchild	74LS92	
	Hitachi	HD74LS92	
	National	DM74LS92	
	SGS	T74LS92	
	Signetics	74LS92	
	TI	**SN74LS92**	**952**
SN74LS93	Fairchild	74LS93	
	Hitachi	HD74LS93	
	National	DM74LS93	
	SGS	T74LS93	
	Signetics	74LS93	
	TI	**SN74LS93**	**953**
SN74LS95B	Fairchild	74LS95B	
	Hitachi	HD74LS95B	
	National	DM74LS95B	
	SGS	T74LS95B	
	~~Signetics~~	~~74LS95B~~	
	TI	**SN74LS95B**	**954**
SN74S112	Fairchild	74S112	
	Hitachi	HD74S112	
	National	DM74S112	
	Signetics	74S112	
	TI	**SN74S112**	**959**
TCA4500	National	LM4500	
	Siemens	TCA4500	
TDA1085	Plessey	TDA1085	
TDA1085A	Plessey	TDA1085A	
TDA1090	Sprague	ULN-2242	
TDA1327	Motorola	MC1327	
	TI	SN76227	
TL431	Fairchild	μA431	
	TI	TL431	
TL493	TI	TL493	
	Unitrode	**UC493A**	**3709**
TL494	**Exar**	**XR494**	**3380**
	Fairchild	μA494	
	Sprague	ULS8194	
	TI	TL494	
	Unitrode	**UC494A**	**3709**
TL495	**Exar**	**XR495**	**3380**
	TI	TL495	
	Unitrode	**UC495A**	**3709**
ULN2001	Exar	XR2001	
		XR2201	
	Fairchild	9665	
	Motorola	**MC1411**	**3064**
		XR2201	
	NEC	μPA2001	
	RIFA	PBD352301	
	Sanyo	LB1231	
	SGS	L201	
	SiliconG	SG2001	
	Sprague	ULN-2001	
		ULN-2021	
		ULQ-2002	
		ULS-2001	
	TI	ULN2001	
	Toshiba	TD62001	
ULN2002	Exar	XR2002	
		XR2202	
	Fairchild	9666	
		MC1412	
	Motorola	**MC1412**	**3064**
	NEC	μPA2002	
		(Continued)	
ULN2002	RIFA	PBD352304	
	Sanyo	LB1232	
	SGS	L202	
	Signetics	NE5602	
	Sprague	ULN-2002	
		ULQ-2003	
	TI	ULN2002	
	Toshiba	TD62002	
ULN2003	Exar	XR2003	
		XR2004	
		XR2203	
	Fairchild	9667	
		MC1413	
	Mitsubishi	M54523	
	Motorola	**MC1413**	**3064**
	Sanyo	LB1233	
	SGS	L203	
	Signetics	NE5603	
		ULN2003	
	SiliconG	SG2003	
	Sprague	ULN-2003	
		ULQ-2003	
		ULQ-2004	
		ULS-2003	
		ULS-2004	
	TI	ULN2003	
	Toshiba	TD62003	
ULN2004	Exar	XR2204	
	Fairchild	9668	
	Mitsubishi	M54526	
	Motorola	**MC1416**	**3064**
	Sanyo	LB1234	
	SGS	L204	
	Signetics	NE5604	
		ULN2004	
	SiliconG	SG2004	
	Sprague	ULN-2004	
		ULS2004	
	TI	ULN2004	
	Toshiba	TD62004	
ULN2068	Sprague	ULN-2068	
	TI	SN75068	
		ULN2068	
ULN2074	Sprague	ULN-2074	
	~~TI~~	~~SN75074~~	
		ULN2074	
	Toshiba	TD62074	
XR2201	Exar	XR2001	
		XR2201	
	Fairchild	9665	
	Motorola	**MC1411**	**3064**
		ULN2001	
	NEC	μPA2001	
	RIFA	PBD352301	
	Sanyo	LB1231	
	SGS	L201	
	SiliconG	SG2001	
	Sprague	ULN-2001	
		ULN-2021	
		ULQ-2002	
		ULS-2001	
	TI	ULN2001	
	Toshiba	TD62001	
μA758	National	LM1800	
	RCA	CA758	
	Signetics	μA758	
	TI	SN76111	
		SN76116	
μA78S40	Fairchild	μA78S40	

National Semiconductor

Manufacturer Device	Replacement Source	Device	IC Master Page
54S470	Fujitsu	MB7117E-W	
	MMI	5308	
54S471	Fujitsu	MB7118E-W	
	MMI	5309	
74S470	Fujitsu	MB7117	
	MMI	6308	
	TI	TBP18SA2Z	
74S471	Fujitsu	MB7118	
	MMI	6309	
	TI	TBP18S2Z	
87S321	**AMD**	**AM27S43**	**3908**
	Fujitsu	MB7142	
	Harris	76321	
		HM76321	
	Intel	3632	
	MMI	**53S3281**	**4026**
		63S3281	**4026**
	National	**DM87S321**	**4057**
	Raytheon	**29671**	**4131**
	Signetics	N82S321	
87S401	AMD	AM3341	
	Fairchild	3341	
	MMI	67401	
93L420	AMD	AM27LS00	
	Fairchild	93421	
		93L420	
		93L421	
	Intel	3106	
	Motorola	MC4256	
	National	93L421	
		DM74S200	
	NEC	μPB2200	
	Signetics	74200	
		N82S116	
		N82S16	
	TI	SN74LS200	
		SN74S200	
		SN74S201	**993**
93L421	AMD	AM27LS00	
	Fairchild	93421	
		93L420	
		93L421	
	Intel	3106	
	Motorola	MC4256	
	National	93L420	
		DM74S200	
	NEC	μPB2200	
	Signetics	74200	
		N82S116	
		N82S16	
	TI	SN74LS200	
		SN74S200	
		SN74S201	**993**
AD7520	AD	AD7520	
	Datel	DAC-HA10B	
	Intersil	AD7520	
	MicroPwr	MP7520	
	National	DAC1020	
		DAC1021	
		DAC1022	
AD7521	AD	AD7521	
	Datel	DAC-HA12B	
	HybridSys	DAC331-12	
	Intersil	AD7521	
	MicroPwr	MP7521	
	National	DAC1220	
		DAC1221	
		DAC1222	
AD7533	AD	AD7533	
	Datel	**DAC-7533**	**2863**
	Intersil	AD7533	
	MicroPwr	MP7533	
ADC0801	**Intersil**	**ADC0801**	**2993**
	TI	ADC0801	
ADC0802	**Intersil**	**ADC0802**	**2993**
	TI	ADC0802	
ADC0803	**Datel**	**ADC-830**	**2863**
	Intersil	**ADC0803**	**2993**
	TI	ADC0803	
ADC0804	**Intersil**	**ADC0804**	**2993**
	TI	ADC0804	
ADC0808	Mostek	MK0808	
	TI	ADC0808	
ADC0809	Mostek	MK50809	
	TI	ADC0809	
ADC0816	Datel	DAS-952	
	Mostek	MK50816	
	TI	ADC0816	
ADC0817	Mostek	MK50817	
AH0126	Intersil	DG126	
	Siliconix	DG126	
AH0129	Intersil	DG129	
	Siliconix	DG129	
AH0133	Intersil	DG133	
	Siliconix	DG133	
AH0134	Intersil	DG134	
	Siliconix	DG134	
AH0139	Intersil	DG139	
	Siliconix	DG139	
AH0140	Intersil	DG140	
	Siliconix	DG140	
AH0141	Intersil	DG141	
	Siliconix	DG141	
AH0142	Intersil	DG142	
	Siliconix	DG142	
AH0143	Intersil	DG143	
	Siliconix	DG143	
AH0144	Intersil	DG144	
	Siliconix	DG144	
AH0145	Intersil	DG145	
	Siliconix	DG145	

◆ Discontinued

The manufacturers report their devices can be used as direct replacements.
Performance details often differ, so compare the specifications considering your requirements.

National Semiconductor (Cont'd)

Manufacturer Device	Replacement Source	Device	IC Master Page
AH0146	Intersil	DG146	
	Siliconix	DG146	
AH0151	Intersil	DG151	
	Siliconix	DG151	
AH0152	Intersil	DG152	
	Siliconix	DG152	
AH0153	Intersil	DG153	
	Siliconix	DG153	
AH0154	Intersil	DG154	
	National	AM0154	
	Siliconix	DG154	
AH0161	Intersil	DG161	
	Siliconix	DG161	
AH0162	Intersil	DG162	
	Siliconix	DG162	
AH0163	Intersil	DG163	
	National	AM0163	
	Siliconix	DG163	
AH0164	Intersil	DG164	
	National	AM0164	
	Siliconix	DG164	
AH5009	Intersil	IH5009	
	National	AM9709	
		AM97C09	
AH5010	Intersil	IH5010	
	National	AM9710	
		AM97C10	
AH5011	Intersil	IH5011	
	National	AM9711	
		AM97C11	
AH5012	Intersil	IH5012	
	National	AM9712	
		AM97C12	
AH5013	Intersil	IH5013	
AH5014	Intersil	IH5014	
AH5015	Intersil	IH5015	
AH5016	Intersil	IH5016	
AM0154	Intersil	DG154	
	National	AH0154	
	Siliconix	DG154	
AM0163	Intersil	DG163	
	National	AH0163	
	Siliconix	DG163	
AM0164	Intersil	DG164	
	National	AH0164	
	Siliconix	DG164	
AM9709	Intersil	IH5009	
	National	AH5009	
		AM97C09	
AM9710	Intersil	IH5010	
	National	AH5010	
		AM97C10	
AM9711	Intersil	IH5011	
	National	AH5011	
		AM97C11	
AM9712	Intersil	IH5012	
	National	AH5012	
		AM97C12	
AM97C09	Intersil	IH5009	
	National	AH5009	
		AM9709	
AM97C10	Intersil	IH5010	
	National	AH5010	
		AM9710	
AM97C11	Intersil	IH5011	
	National	AH5011	
		AM9711	
AM97C12	Intersil	IH5012	
	National	AH5012	
		AM9712	
BLC-337	Intel	SBC-337	
BLC80/316	Intel	ISBC80/30	
CA3089	Hitachi	HA1137	
		HA1230	
	National	LM3089	
	RCA	CA3089	
	Sanyo	LA1230	
		LA3089	
	SGS	TCA3089	
		TDA1200	
	Signetics	CA3089	
	Telefunken	U417	
	TI	SN76689	
CD4000	Motorola	MC14000	
	RCA	CD4000	
	SGS	HCF4000	
	Signetics	HEF400	
	SSS	SCL4000	
	Solitron	CM4000	
CD4001	Fairchild	F4001	
	Hitachi	HD14001	
	Motorola	MC14001	
	National	MM74C02	
	OKI	MSM4001	
	RCA	CD4001	
	Sanyo	LC4001B	
	SGS	HCF4001	
	Signetics	HEF4001	
	SSS	SCL4001	
	Solitron	CM4001	
	Toshiba	TC4001	
CD4002	Fairchild	F4002	
	Hitachi	HD14002	
	Motorola	MC14002	
	RCA	CD4002	
	SGS	HCF4002	
	Signetics	HEF4002	
	SSS	SCL4002	
	Solitron	CM4002	
	Toshiba	TC4002	
CD4006	Fairchild	F4006	
	Hitachi	HD14006	
	SGS	HCF4006	
	Signetics	HEF4006	
	SSS	SCL4006	
	Solitron	CM4006	
	Toshiba	TC4006	
CD4007	Fairchild	F4007	
	Hitachi	HD14007	
	Motorola	MC14007	
	RCA	CD4007	
	SGS	HCF4007	
	Signetics	HEF4007	
	SSS	SCL4007	
	Solitron	CM4007	
	Toshiba	TC4007	
CD4008	Fairchild	F4008	
	Hitachi	HD14008	
	Motorola	MC14008	
	National	MM74C83	
	RCA	CD4008	
	SGS	HCF4008	
	Signetics	HEF4008	
	SSS	SCL4008	
	Solitron	CM4008	
	Toshiba	TC4008	
CD4009	Hitachi	HD14009	
	RCA	CD4049	
	SGS	HCF4009	
	SSS	SCL4009	
	Solitron	CM4009	
	Toshiba	TC4009	
CD4010	Hitachi	HD14010	
	RCA	CD4010	
	SGS	HCF4010	
	SSS	SCL4010	
	Solitron	CM4010	
	Toshiba	TC4010	
CD40106	Fairchild	F40014	
	Hitachi	HD14584	
	Motorola	MC14584	
	National	CD4584	
		MM54C14	
		MM74C14	
	RCA	CD40106	
	SGS	HCF40106	
	Signetics	**HEF40106**	**865**
	SSS	SCL4584	
CD4011	Fairchild	F4011	
	Hitachi	HD14011	
	Motorola	MC14011	
	National	MM74C00	
	OKI	MSM4011	
	RCA	CD4011	
	Sanyo	LC4011	
	SGS	HCF4011	
	Signetics	HEF4011	
	SSS	SCL4011	
	Solitron	CM4011	
	Toshiba	TC4011	
CD4012	Fairchild	F4012	
	Hitachi	HD14012	
	Motorola	MC14012	
	RCA	CD4012	
	SGS	HCF4012	
	Signetics	HEF4012	
	SSS	SCL4012	
	Solitron	CM4012	
	Toshiba	TC4012	
CD4013	Fairchild	F4013	
	Hitachi	HD14013	
			(Continued)
CD4013	Motorola	MC14013	
	National	MM74C74	
	OKI	MSM4013	
	RCA	CD4013	
	Sanyo	LC4013	
	SGS	HCF4013	
	Signetics	HEF4013	
	SSS	SCL4013	
	Solitron	CM4013	
	Toshiba	TC4013	
CD4014	Fairchild	F4014	
	Hitachi	HD14014	
	Motorola	MC14014	
	RCA	CD4014	
	SGS	HCF4014	
	Signetics	HEF4014	
	SSS	SCL4014	
	Solitron	CM4014	
	Toshiba	TC4014	
CD4015	Fairchild	F4015	
	Hitachi	HD14015	
	Motorola	MC14015	
	National	MM74C164	
	OKI	MSM4015	
	RCA	CD4015	
	Sanyo	LC4015	
	SGS	HCF4015	
	Signetics	HEF4015	
	SSS	SCL4015	
	Solitron	CM4015	
	Toshiba	TC4015	
CD4016	Fairchild	F4016	
		F4066	
	Hitachi	HD14016	
		HD14066	
	Motorola	MC14016	
		MC14066	
	National	CD4066	
	RCA	CD4016	
		CD4066	
	Sanyo	LC4016	
		LC4066	
	SGS	HCF4016	
		HCF4066	
	Signetics	**HEF4016**	**864**
		HEF4066	
	SSS	SCL4016	
		SCL4066	
	Solitron	CM4016	
		CM4066	
		HCF4016	
	Toshiba	TC4016	
		TC4066	
CD40160	Fairchild	F40160	
	Hitachi	HD14160	
	Motorola	MC14160	
	National	MM54C160	
		MM74C160	
	RCA	CD40160	
	SGS	HCF40160	
	SSS	SCL4160	
	Toshiba	TC40160	
CD40161	Fairchild	F40161	
	Hitachi	HD14161	
	Motorola	MC14161	
	National	MM54C161	
		MM74C161	
	RCA	CD40161	
	SGS	HCF40161	
	Signetics	HEF40161	
	SSS	SCL4161	
	Toshiba	TC40161	
CD40162	Fairchild	F40162	
	Hitachi	HD14162	
	Motorola	MC14162	
	National	MM54C162	
		MM74C162	
	RCA	CD40162	
	SGS	HCF40162	
	Signetics	HEF40162	
	SSS	SCL4162	
	Toshiba	TC40162	
CD40163	Fairchild	F40163	
	Hitachi	HD14163	
	Motorola	MC14163	
	National	MM54C163	
		MM74C163	
	RCA	CD40163	
	SGS	HCF40163	
	Signetics	HEF40163	
	SSS	SCL4163	
	Toshiba	TC40163	
CD4017	Fairchild	F4017	
	Hitachi	HD14017	
	Motorola	MC14017	
	RCA	CD4017	
	SGS	HCF4017	
	Signetics	HEF4017	
	SSS	SCL4017	
	Solitron	CM4017	
	Toshiba	TC4017	
CD40174	Fairchild	F40174	
	Hitachi	HD14174	
	Motorola	MC14174	
	National	MM54C174	
		MM74C174	
	RCA	CD40174	
	SGS	HCF40174	
	Signetics	HEF40174	
	SSS	SCL4174	
	Toshiba	TC40174	
CD40175	Fairchild	F40175	
	Hitachi	HD14175	
	Motorola	MC14175	
	National	MM54C175	
		MM74C175	
	Signetics	HEF40175	
	Toshiba	TC40175	
CD4018	Fairchild	F4018	
	Hitachi	HD14018	
	Motorola	MC14018	
	RCA	CD4018	
	SGS	HCF4018	
	Signetics	HEF4018	
	SSS	SCL4018	
	Solitron	CM4018	
	Toshiba	TC4018	
CD4019	Fairchild	F4019	
	OKI	MSM4019	
	RCA	CD4019	
	Sanyo	LC4019	
	SGS	HCF4019	
	Signetics	HEF4019	
	SSS	SCL4019	
	Solitron	CM4019	
	Toshiba	TC4019	
CD40192	Fairchild	F4029	
	Motorola	MC14029	
	National	CD4029	
	RCA	CD40192	
		CD4029	
	SGS	HCF40192	
		HCF4029	
	Signetics	HEF40192	
	SSS	SCL4029	
		SCL4192	
	Solitron	CM4029	
	Toshiba	TC40192	
		TC4029	
CD40193	Fairchild	F40193	
	National	MM54C193	
		MM74C193	
	RCA	CD40193	
	SGS	HCF40193	
	Signetics	HEF40193	
	SSS	SCL4193	
	Toshiba	TC40193	
CD40195	Fairchild	F40195	
	National	MM74C195	
CD4020	Fairchild	F4020	
	Hitachi	HD14020	
	Motorola	MC14020	
	RCA	CD4020	
	SGS	HCF4020	
	Signetics	HEF4020	
	SSS	SCL4020	
	Solitron	CM4020	
	Toshiba	TC4020	
CD4021	Fairchild	F4021	
	Hitachi	HD14021	
	Motorola	MC14021	
	RCA	CD4021	
	SGS	HCF4021	
	Signetics	HEF4021	
	SSS	SCL4021	
	Toshiba	TC4021	
CD4022	Fairchild	F4022	
	Hitachi	HD14022	
	Motorola	MC14022	
	RCA	CD4022	
	SGS	HCF4022	
	Signetics	HEF4022	
	SSS	SCL4022	
			(Continued)

◆ Discontinued

Bold face device numbers indicate manufacturers data is provided in the IC Master on the pages noted.

© IC MASTER 1984

National Semiconductor (Cont'd)

Manufacturer Device	Replacement Source	Device	IC Master Page
CD4022	Solitron	CM4022	
	Toshiba	TC4022	
CD4023	Fairchild	F4023	
	Hitachi	HD14023	
	Motorola	MC14023	
	National	MM74C10	
	RCA	CD4023	
	SGS	HCF4023	
	Signetics	HEF4023	
	SSS	SCL4023	
	Solitron	CM4023	
	Toshiba	TC4023	
CD4024	Fairchild	F4024	
	Hitachi	HD14024	
	Motorola	MC14024	
	RCA	CD4024	
	SGS	HCF4024	
	Signetics	HEF4024	
	SSS	SCL4024	
	Solitron	CM4024	
	Toshiba	TC4024	
CD4025	Fairchild	F4025	
	Hitachi	HD14025	
	Motorola	MC14025	
	RCA	CD4025	
	SGS	HCF4025	
	Signetics	HEF4025	
	SSS	SCL4025	
	Solitron	CM4025	
	Toshiba	TC4025	
CD4027	Fairchild	F4027	
	Hitachi	HD14027	
	Motorola	MC14027	
	National	MM74C76	
	OKI	MSM4027	
	RCA	CD4027	
	Sanyo	LC4027	
	SGS	HCF4027	
	Signetics	HEF4027	
	SSS	SCL4027	
	Solitron	CM4027	
CD4028	Fairchild	F4028	
	Hitachi	HD14028	
	Motorola	MC14028	
	National	MM74C42	
	OKI	MSM4028	
	Sanyo	LC4028	
	SGS	HCF4028	
	Signetics	HEF4028	
	SSS	SCL4028	
	Solitron	CM4028	
	Toshiba	TC4028	
CD4029	Fairchild	F4029	
	Motorola	MC14029	
	National	CD40192	
	RCA	CD40192	
		CD4029	
	SGS	HCF40192	
		HCF4029	
	Signetics	HEF40192	
	SSS	SCL4029	
		SCL4192	
	Solitron	CM4029	
	Toshiba	TC40192	
		TC4029	
CD4030	Fairchild	F4030	
	RCA	CD4030	
	SGS	HCF4030	
	Signetics	HEF4030	
	SSS	SCL4030	
	Solitron	CM4030	
	Toshiba	TC4030	
CD4031	Fairchild	F4031	
	RCA	CD4031	
	SGS	HCF4031	
	Signetics	HEF4731	
CD4034	Fairchild	F4034	
	Hitachi	HD14034	
	Motorola	MC14034	
	RCA	CD4034	
	SGS	HCF4034	
	SSS	SCL4034	
	Solitron	CM4034	
	Toshiba	TC4034	
CD4040	Fairchild	F4040	
	Hitachi	HD14040	
	Motorola	MC14040	
	RCA	CD4040	
	SGS	HCF4040	
		(Continued)	

Manufacturer Device	Replacement Source	Device	IC Master Page
CD4040	Signetics	HEF4040	
	SSS	SCL4040	
	Solitron	CM4040	
	Toshiba	TC4040	
CD4041	Fairchild	F4041	
	RCA	CD4041	
	SGS	HCF4041	
	Signetics	HEF4041	
	SSS	SCL4041	
	Solitron	CM4041	
CD4042	Fairchild	F4042	
	Hitachi	HD14042	
	Motorola	MC14042	
	RCA	CD4042	
	SGS	HCF4042	
	Signetics	HEF4042	
	SSS	SCL4042	
	Solitron	CM4042	
	Toshiba	TC4042	
CD4043	Hitachi	HD14043	
	Motorola	MC14043	
	RCA	CD4043	
	SGS	HCF4043	
	Signetics	HEF4043	
	SSS	SCL4043	
	Solitron	CM4043	
	Toshiba	TC4043	
CD4044	Fairchild	F4044	
	Hitachi	HD14044	
	Motorola	MC14044	
	RCA	CD4044	
	SGS	HCF4044	
	Signetics	HEF4044	
	Solitron	CM4044	
	Toshiba	TC4044	
CD4046	Fairchild	F4046	
	Hitachi	HD14046	
	Motorola	MC14046	
	RCA	CD4046	
	SGS	HCF4046	
	SSS	SCL4046	
	Solitron	CM4046	
CD4047	Fairchild	F4047	
	RCA	CD4047	
	SGS	HCF4047	
	Signetics	HEF4047	
	SSS	SCL4047	
	Solitron	CM4047	
	Toshiba	TC4047	
CD4048	RCA	CD4048	
	SGS	HCF4048	
	SSS	SCL4402	
	Solitron	CM4048	
CD4049	Fairchild	F4049	
	Hitachi	HD14049	
	Motorola	MC14049	
	OKI	MSM4049	
	RCA	CD4049	
	Sanyo	LC4049	
	SGS	HCF4049	
	Signetics	HEF4049	
	SSS	SCL4049	
	Solitron	CM4049	
	Toshiba	TC4049	
CD4050	Fairchild	F4050	
	Hitachi	HD14050	
	Motorola	MC14050	
	RCA	CD4050	
	SGS	HCF4050	
	Signetics	HEF4050	
	SSS	SCL4050	
	Solitron	CM4050	
	Toshiba	TC4050	
CD4051	Fairchild	F4051	
	Hitachi	HD14051	
	Motorola	MC14051	
	RCA	CD4051	
	SGS	HCF4051	
	Signetics	HEF4051	
	SSS	SCL4051	
	Solitron	CM4051	
	Toshiba	TC4051	
CD4052	AD	AD7502	
	Hitachi	HD14052	
	MicroPwr	MP7502	
	SSS	SCL4052	
	Solitron	CM4052	
	Toshiba	TC4052	
CD4053	Fairchild	F4053	
	Hitachi	HD14053	
	Motorola	MC14053	
	RCA	CD4053	
		(Continued)	

Manufacturer Device	Replacement Source	Device	IC Master Page
CD4053	SGS	HCF4053	
	Signetics	HEF4053	
	SSS	SCL4053	
	Solitron	CM4053	
	Toshiba	TC4053B	
CD4060	Motorola	MC14060	
	RCA	CD4060	
	SGS	HCF4060	
	Signetics	HEF4060	
	SSS	SCL4060	
CD4066	Fairchild	F4016	
		F4066	
	Hitachi	HD14016	
		HD14066	
	Motorola	MC14016	
		MC14066	
	National	CD4016	
	RCA	CD4016	
		CD4066	
	Sanyo	LC4016	
		LC4066	
	SGS	HCF4016	
		HCF4066	
	Signetics	**HEF4016**	**864**
		HEF4066	
	SSS	SCL4016	
		SCL4066	
	Solitron	CM4016	
		CM4066	
		HCF4016	
	Toshiba	TC4016	
		TC4066	
CD4069	Fairchild	F4069	
	Hitachi	HD14069	
	Motorola	MC14069	
	National	MM54C04	
		MM74C04	
	OKI	MSM4069	
	RCA	CD4069	
	Sanyo	LC4069	
	SGS	HCF4069	
	Signetics	HEF4069	
	SSS	SCL4069	
		SCL4449	
	~~Solitron~~	~~CM4069~~	
	Toshiba	TC4069	
CD4070	Fairchild	F4070	
	Hitachi	HD14070	
	Motorola	MC14070	
	National	MM74C86	
	RCA	CD4070	
	SGS	HCF4070	
	Signetics	HEF4070	
	SSS	SCL4070	
	Solitron	CM4070	
CD4071	Fairchild	F4071	
	Hitachi	HD14071	
	Motorola	MC14071	
	National	MM74C32	
	OKI	MSM4071	
	RCA	CD4071	
	Sanyo	LC4071	
	SGS	HCF4071	
	Signetics	HEF4071	
	SSS	SCL4071	
	Solitron	CM4071	
	Toshiba	TC4071	
CD4072	Fairchild	F4072	
	Hitachi	HD14072	
	Motorola	MC14072	
	RCA	CD4072	
	SGS	HCF4072	
	Signetics	HEF4072	
	SSS	SCL4072	
	Toshiba	TC4072	
CD4073	Fairchild	F4073	
	Hitachi	HD14073	
	Motorola	MC14073	
	RCA	CD4073	
	SGS	HCF4073	
	Signetics	HEF4073	
	SSS	SCL4073	
	Solitron	CM4073	
	Toshiba	TC4073	
CD4075	Fairchild	F4075	
	Hitachi	HD14075	
	Motorola	MC14075	
	RCA	CD4075	
	SGS	HCF4075	
	Signetics	HEF4075	
	SSS	SCL4075	
		(Continued)	

Manufacturer Device	Replacement Source	Device	IC Master Page
CD4075	Solitron	CM4075	
	Toshiba	TC4075	
CD4076	Fairchild	F4076	
	Hitachi	HD14076	
	Motorola	MC14076	
	National	MM54C173	
		MM74C173	
	RCA	CD4076	
	SGS	HCF4076	
	Signetics	HEF4076	
	SSS	SCL4076	
	Solitron	CM4076	
	Toshiba	TC4076	
CD4077	Fairchild	F4077	
	Hitachi	HD14077	
	Motorola	MC14077	
	RCA	CD4077	
	SGS	HCF4077	
	Signetics	HEF4077	
	SSS	SCL4077	
	Solitron	CM4077	
CD4081	Fairchild	F4081	
	Hitachi	HD14081	
	Motorola	MC14081	
	National	MM74C08	
	OKI	MSM4081	
	RCA	CD4081	
	Sanyo	LC4081	
	SGS	HCF4081	
	Signetics	HEF4081	
	SSS	SCL4081	
	Solitron	CM4081	
	Toshiba	TC4081	
CD4082	Fairchild	F4082	
	Hitachi	HD14082	
	Motorola	MC14082	
	RCA	CD4082	
	SGS	HCF4082	
	Signetics	HEF4082	
	SSS	SCL4082	
	Toshiba	TC4082	
CD4085	Fairchild	F4085	
	RCA	CD4085	
	SGS	HCF4085	
	~~Signetics~~	~~HEF4085~~	
	SSS	SCL4085	
	Toshiba	TC4085	
CD4089	RCA	CD4089	
	SGS	HCF4089	
CD4093	Fairchild	F4093	
	Hitachi	HD14093	
	Motorola	MC14093	
	OKI	MSM4093	
	RCA	CD4093	
	Sanyo	LC4093	
	SGS	HCF4093	
	Signetics	HEF4093	
	SSS	SCL4093	
	Toshiba	TC4093	
CD4099	Hitachi	HD14099	
	Motorola	MC14099	
	RCA	CD4099	
	SGS	HCF4099	
	SSS	SCL4099	
	Toshiba	TC4099	
CD4503	Fairchild	F40097	
	Hitachi	HD14503	
	Motorola	MC14503	
	National	MM80C97	
	RCA	CD4503	
	Signetics	HEF40097	
CD4510	Fairchild	F4510	
	Hitachi	HD14510	
	Motorola	MC14510	
	RCA	CD4510	
	SGS	HCF4510	
	Signetics	HEF4510	
	SSS	SCL4510	
	Solitron	CM4510	
	Toshiba	TC4510	
CD4511	Fairchild	F4511	
	Hitachi	HD14511	
	Mitel	MD4511	
	MMI	4511	
	Motorola	MC14511	
	NEC	μPD4511	
	RCA	CD4511	
	SGS	HCF4511	
	Signetics	HEF4511	
	SSS	SCL4511	
	Solitron	CM4511	
	Toshiba	TC4511	

◆ Discontinued

The manufacturers report their devices can be used as direct replacements.
Performance details often differ, so compare the specifications considering your requirements.

National Semiconductor (Cont'd)

Manufacturer Device	Replacement Source	Device	IC Master Page
CD4512	Fairchild	F4512	
	Hitachi	HD14512	
	Motorola	MC14512	
	RCA	CD4512	
	SGS	HCF4512	
	SSS	SCL4512	
	Toshiba	TC4512	
CD4514	Fairchild	F4514	
	Hitachi	HD14514	
	Motorola	MC14514	
	RCA	CD4514	
	SGS	HCF4514	
	Signetics	HEF4514	
	SSS	SCL4514	
	Solitron	CM4514	
	Toshiba	TC4514	
CD4515	Fairchild	F4515	
	Hitachi	HD14515	
	Motorola	MC14515	
	RCA	CD4515	
	SGS	HCF4515	
	Signetics	HEF4515	
	SSS	SCL4515	
	Solitron	CM4515	
	Toshiba	TC4515	
CD4516	Fairchild	F4516	
	Hitachi	HD14516	
	Motorola	MC14516	
	RCA	CD4516	
	SGS	HCF4516	
	Signetics	HEF4516	
	SSS	SCL4516	
	Solitron	CM4516	
	Toshiba	TC4516	
CD4518	Fairchild	F4518	
	Hitachi	HD14518	
	Motorola	MC14518	
	RCA	CD4518	
	SGS	HCF4518	
	Signetics	HEF4518	
	SSS	SCL4518	
	Solitron	CM4518	
	Toshiba	TC4518	
CD4519	Hitachi	HD14519	
		HD4519	
	Motorola	MC14519	
	RCA	CD4519	
	Signetics	HEF4519	
CD4520	Fairchild	F4520	
	Hitachi	HD14520	
	Motorola	MC14520	
	OKI	MSM4520	
	RCA	CD4520	
	Sanyo	LC4520	
	SGS	HCF4520	
	Signetics	HEF4520	
	SSS	SCL4520	
	Solitron	CM4520	
	Toshiba	TC4520	
CD4522	Fairchild	F4522	
	Hitachi	HD14522	
	Motorola	MC14522	
	RCA	CD4522	
	Signetics	HEF4522	
	SSS	SCL4522	
	Toshiba	TC4522	
CD4526	Fairchild	F4526	
	Hitachi	HD14526	
	Motorola	MC14526	
	Signetics	HEF4526	
	SSS	SCL4526	
	Toshiba	TC4526	
CD4527	Fairchild	F4527	
	Hitachi	HD14527	
	Motorola	MC14527	
	RCA	CD4527	
	SGS	HCF4527	
	Signetics	HEF4527	
	SSS	SCL4527	
	Toshiba	TC4527	
		TR4527	
CD4528	Fairchild	F4528	
	Hitachi	HD14528	
	Motorola	MC14528	
	National	MM74C221	
	RCA	CD4098	
	SGS	HCF4098	
	Signetics	HEF4528	
		(Continued)	

Manufacturer Device	Replacement Source	Device	IC Master Page
CD4528	SSS	SCL4528	
	Toshiba	TC4528	
CD4538	Motorola	MC14538	
	OKI	MSM4538	
	Signetics	HEF4538	
CD4543	Fairchild	F4543	
	Hitachi	HD14543	
	Motorola	MC14543	
	RCA	CD4543	
	Signetics	HEF4543	
	Toshiba	TC4543	
CD4584	Fairchild	F40014	
	Hitachi	HD14584	
	Motorola	MC14584	
	National	CD40106	
		MM54C14	
		MM74C14	
	RCA	CD40106	
	SGS	HCF40106	
	Signetics	**HEF40106**	**865**
	SSS	SCL4584	
CD4723	Fairchild	F4723	
CD4XXX	Fairchild	34XXX	
		F4XXX	
	Hitachi	HD14XXX	
	Motorola	MC14XXX	
	OKI	MSM4XXX	
	RCA	CD4XXX	
	SGS	HCF4XXX	
	SSS	SCL4XXX	
	Solitron	CM4XXX	
	TI	TP4000 series	
	Toshiba	TC4XXX	
DAC0800	AMD	AM1408	
		SSS1408	
	AD	AD1408	
		ADDAC-08	
	Datel	DAC-08B	
		DAC-I8BC	
		DAC-IC8B	
		DAC-IC8BC	**2863**
	Fairchild	DAC-08	
		MA0802M	
		μA0801	
		μA0802	
	Motorola	**DAC-08**	**3069**
		MC1408	
	National	DAC0801	
		DAC0802	
		DAC0806	
		DAC0807	
		DAC0808	
	NEC	μPC624	
	PMI	DAC-08	
		DAC-1408	
	Raytheon	**DAC-08**	**3591**
	Signetics	MC1408	
DAC0801	AMD	AM1408	
		SSS1408	
	AD	AD1408	
		ADDAC-08	
	Datel	DAC-08B	
		DAC-I8BC	
		DAC-IC8B	
		DAC-IC8BC	**2863**
	Fairchild	DAC-08	
		MA0802M	
		μA0801	
		μA0802	
	Motorola	**DAC-08**	**3069**
		MC1408	
	National	DAC0800	
		DAC0802	
		DAC0806	
		DAC0807	
		DAC0808	
	NEC	μPC624	
	PMI	DAC-08	
		DAC-1408	
	Raytheon	**DAC-08**	**3591**
	Signetics	MC1408	
DAC0802	AMD	AM1408	
		SSS1408	
	AD	AD1408	
		ADDAC-08	
	Datel	DAC-08B	
		DAC-I8BC	
		DAC-IC8B	
		DAC-IC8BC	**2863**
	Fairchild	DAC-08	
		MA0802M	
		μA0801	
		(Continued)	

Manufacturer Device	Replacement Source	Device	IC Master Page
DAC0802	Fairchild	μA0802	
	Motorola	**DAC-08**	**3069**
		MC1408	
	National	DAC0800	
		DAC0801	
		DAC0806	
		DAC0807	
		DAC0808	
	NEC	μPC624	
	PMI	DAC-08	
		DAC-1408	
	Raytheon	**DAC-08**	**3591**
	Signetics	MC1408	
DAC0806	AMD	AM1408	
		SSS1408	
	AD	AD1408	
		ADDAC-08	
	Datel	DAC-08B	
		DAC-I8BC	
		DAC-IC8B	
		DAC-IC8BC	**2863**
	Fairchild	DAC-08	
		MA0802M	
		μA0801	
		μA0802	
	Motorola	**DAC-08**	**3069**
		MC1408	
	National	DAC0800	
		DAC0801	
		DAC0802	
		DAC0807	
		DAC0808	
	NEC	μPC624	
	PMI	DAC-08	
		DAC-1408	
	Raytheon	**DAC-08**	**3591**
	Signetics	MC1408	
DAC0807	AMD	AM1408	
		SSS1408	
	AD	AD1408	
		ADDAC-08	
	Datel	DAC-08B	
		DAC-I8BC	
		DAC-IC8B	
		DAC-IC8BC	**2863**
	Fairchild	DAC-08	
		MA0802M	
		μA0801	
		μA0802	
	Motorola	**DAC-08**	**3069**
		MC1408	
	National	DAC0800	
		DAC0801	
		DAC0802	
		DAC0806	
		DAC0808	
	NEC	μPC624	
	PMI	DAC-08	
		DAC-1408	
	Raytheon	**DAC-08**	**3591**
	Signetics	MC1408	
DAC0808	AMD	AM1408	
		SSS1408	
	AD	AD1408	
		ADDAC-08	
	Datel	DAC-08B	
		DAC-I8BC	
		DAC-IC8B	
		DAC-IC8BC	**2863**
	Fairchild	DAC-08	
		MA0802M	
		μA0801	
		μA0802	
	Motorola	**DAC-08**	**3069**
		MC1408	
	National	DAC0800	
		DAC0801	
		DAC0802	
		DAC0806	
		DAC0807	
	NEC	μPC624	
	PMI	DAC-08	
		DAC-1408	
	Raytheon	**DAC-08**	**3591**
	Signetics	MC1408	
DAC0832	**Datel**	**DAC-508**	**2863**
DAC1006	**Datel**	**DAC-610**	**2863**
DAC1020	AD	AD7520	
	Datel	DAC-HA10B	
	Intersil	AD7520	
	MicroPwr	MP7520	
	National	AD7520	
		(Continued)	

Manufacturer Device	Replacement Source	Device	IC Master Page
DAC1020	National	DAC1021	
		DAC1022	
DAC1021	AD	AD7520	
	Datel	DAC-HA10B	
	Intersil	AD7520	
	MicroPwr	MP7520	
	National	AD7520	
		DAC1020	
		DAC1022	
DAC1022	AD	AD7520	
	Datel	DAC-HA10B	
	Intersil	AD7520	
	MicroPwr	MP7520	
	National	AD7520	
		DAC1020	
		DAC1021	
DAC1208	**Datel**	**DAC-612**	**2863**
	MicroPwr	MP1208	
DAC1209	MicroPwr	MP1209	
DAC1210	MicroPwr	MP1210	
DAC1220	AD	AD7521	
	Datel	DAC-HA12B	
	HybridSys	DAC331-12	
	Intersil	AD7521	
	MicroPwr	MP7521	
	National	AD7521	
		DAC1221	
		DAC1222	
DAC1221	AD	AD7521	
	Datel	DAC-HA12B	
	HybridSys	DAC331-12	
	Intersil	AD7521	
	MicroPwr	MP7521	
	National	AD7521	
		DAC1220	
		DAC1222	
DAC1222	AD	AD7521	
	Datel	DAC-HA12B	
	HybridSys	DAC331-12	
	Intersil	AD7521	
	MicroPwr	MP7521	
	National	AD7521	
		DAC1220	
		DAC1221	
DAC1230	MicroPwr	MP1230	
DAC1231	MicroPwr	MP1231	
DAC1232	MicroPwr	MP1232	
DAC1280	AD	ADDAC80	
		ADDAC85	
	Burr-Brown	DAC80	
		DAC85	
	Datel	DAC-85	
		DAC-HZ12B	
	HybridSys	**DAC9356**	**2986**
		HSDAC80	
	MicroNet	**DAC80**	**3044**
		DAC85	
	National	DAC1285	
	TeledyneP	TPDAC80	
DAC1285	AD	ADDAC80	
		ADDAC85	
	Burr-Brown	DAC80	
		DAC85	
	Datel	DAC-85	
		DAC-HZ12B	
	HybridSys	**DAC9356**	**2986**
		HSDAC80	
	MicroNet	**DAC80**	**3044**
		DAC85	
	National	DAC1280	
	TeledyneP	TPDAC80	
DAC1287	Burr-Brown	DAC85/CCD	
DH3725	Fairchild	FQ3725	
	Motorola	MQ3725	
	Raytheon	SP3725	
	RCA	CA3725	
DM10116	Fairchild	F10116	
	Hitachi	HD10116	
	Motorola	MC10116	
	Signetics	**10116**	**858**
DM10414	Fairchild	F10414	
	Motorola	**MCM10152**	**4046**
DM10415	**AMD**	**AM10415**	**3909**
	Fairchild	F10415	
	Fujitsu	MBM10415	
		MCM10415	
	Hitachi	HM2110	
		HM2112	
	Motorola	**MCM10146**	**4046**
	Siemens	GXB10415	
	Signetics	10415	

◆ Discontinued

Bold face device numbers indicate manufacturers data is provided in the IC Master on the pages noted.

ALTERNATE SOURCE DIRECTORY

© IC MASTER 1984

National Semiconductor (Cont'd)

Manufacturer Device	Replacement Source	Device	IC Master Page
DM10422	Fairchild	F10422	
	Fujitsu	MBM10422	
	Hitachi	HM10422	
	Motorola	**MCM10422**	**4047**
	Signetics	10422	
DM10470	AMD	AM10470	
	Fairchild	F10470	
	Fujitsu	MBM10470	
	Hitachi	HM10470	
		HM2142	
	Motorola	**MCM10470**	**4047**
	Signetics	10470	
DM5400	Fairchild	5400	
	Signetics	**5400**	**528,860**
	TI	**SN5400**	**920**
DM5401	Fairchild	5401	
	TI	**SN5401**	**920**
DM5402	Fairchild	5402	
	TI	**SN5402**	**920**
DM5403	Fairchild	5403	
	TI	**SN5403**	**921**
DM5404	Fairchild	5404	
		9016	
	National	DM9016C	
	TI	**SN5404**	**921**
DM5405	Fairchild	5405	
	TI	**SN5405**	**921**
DM5406	Fairchild	5406	
	TI	**SN5406**	**922**
DM5407	Fairchild	5407	
	TI	**SN5407**	**922**
DM5408	Fairchild	5408	
	TI	**SN5408**	**922**
DM5409	Fairchild	5409	
	TI	**SN5409**	**923**
DM5410	Fairchild	5410	
	TI	**SN5410**	**923**
DM54107	Fairchild	54107	
	Motorola	MC54107	
	TI	**SN54107**	**957**
DM54109	**Signetics**	**54109**	**860**
	TI	**SN54109**	**958**
DM5411	Fairchild	5411	
	Signetics	**5411**	**860**
	TI	SN5411	
DM54121	Fairchild	54121	
		9603	
	Signetics	**54121**	**528,860**
	TI	**SN54121**	**961**
DM54123	Fairchild	54123	
	Signetics	**54123**	**528,861**
	TI	**SN54123**	**962**
DM54125	Fairchild	54125	
	National	DM7093	
	TI	**SN54125**	**963**
		SN54425	**1034**
DM54126	Fairchild	54126	
	National	DM7094	
	Signetics	**54126**	**528,861**
	TI	**SN54126**	**963**
		SN54426	**1034**
DM5413	Fairchild	5413	
	TI	**SN5413**	**924**
DM54132	Fairchild	54132	
	Signetics	**54132**	**861**
	TI	**SN54132**	**965**
DM5414	Fairchild	5414	
	Signetics	**5414**	**860**
	TI	**SN5414**	**924**
DM54141	Fairchild	9315	
	Signetics	54141	
	TI	SN54141	
DM54145	Fairchild	54145	
	TI	**SN54145**	**970**
DM54147	**Signetics**	**54147**	**861**
	TI	**SN54147**	**970**
DM54148	National	DM9318	
	Signetics	**54148**	**861**
	TI	**SN54148**	**971**
DM54150	Fairchild	54150	
	TI	**SN54150**	**971**
DM54151	Fairchild	54151A	
	Signetics	**54151**	**528,861**
	TI	SN54151	
		SN54151A	**972**
DM54153	Fairchild	54153	
	Signetics	**54153**	**528,861**
	TI	**SN54153**	**972**
DM54155	Fairchild	54155	
	TI	**SN54155**	**974**
DM54156	Fairchild	54156	
	TI	**SN54156**	**974**
DM54157	Fairchild	54157	
	Signetics	**54157**	**528,861**
	TI	**SN54157**	**975**
DM5416	Fairchild	5416	
	TI	**SN5416**	**925**
DM54160	Fairchild	54160	
		9310	
	Raytheon	RM9310	
	Signetics	**54160**	**861**
	TI	**SN54160**	**977**
DM54161	Fairchild	54161	
	Signetics	**54161**	**528,861**
	TI	**SN54161**	**977**
DM54162	Fairchild	54162	
	TI	**SN54162**	**978**
DM54163	Fairchild	54163	
	Signetics	**54163**	**528,861**
	TI	**SN54163**	**978**
DM54164	Fairchild	54164	
	National	DM7570	
	Signetics	**54164**	**528,861**
	TI	**SN54164**	**979**
DM54165	Fairchild	54165	
	National	DM7590	
	Signetics	**54165**	**861**
	TI	**SN54165**	**979**
DM54166	Fairchild	54166	
	Signetics	**54166**	**861**
	TI	**SN54166**	**979**
DM5417	Fairchild	5417	
	TI	**SN5417**	**925**
DM54170	Fairchild	54170	
	TI	**SN54170**	**981**
DM54173	Fairchild	54173	
	National	DM7551	
	Raytheon	RM8T10	
	TI	**SN54173**	**982**
DM54174	Fairchild	54174	
	Signetics	**54174**	**528,861**
	TI	**SN54174**	**983**
DM54175	Fairchild	54175	
	Signetics	**54175**	**528,861**
	TI	**SN54175**	**983**
DM54176	Fairchild	54176	
	Raytheon	RM8280	
	Signetics	54176	
		S8280	
	TI	**SN54176**	**984**
DM54177	Fairchild	54177	
	National	DM7281	
	Raytheon	RM8281	
	Signetics	54177	
		S7281	
		S8281	
	TI	**SN54177**	**984**
DM54180	Fairchild	54180	
	Signetics	**54180**	**528,861**
	TI	**SN54180**	**985**
DM54181	Fairchild	54181	
	Raytheon	RM9341	
	Signetics	**54181**	**861**
	TI	**SN54181**	**985**
DM54182	Fairchild	54182	
	Raytheon	RM9342	
	TI	**SN54182**	**986**
DM54184	**TI**	**SN54184**	**987**
DM54185	TI	SN54185	
DM54185A	**TI**	**SN54185A**	**988**
DM54187	TI	SN54187	
DM54190	Fairchild	54190	
	Signetics	**54190**	**861**
	TI	**SN54190**	**989**
DM54191	Fairchild	54191	
	Signetics	**54191**	**861**
	TI	**SN54191**	**989**
DM54192	Fairchild	54192	
	National	DM7560	
	TI	**SN54192**	**990**
DM54193	Fairchild	54193	
	National	DM7563	
	TI	**SN54193**	**990**
DM54194	**Signetics**	**54194**	**861**
	TI	**SN54194**	**990**
DM54195	Fairchild	54195	
		9300	
	TI	**SN54195**	**991**
DM54196	Fairchild	54196	
	Signetics	54196	
	TI	**SN54196**	**991**
DM54198	Fairchild	54198	
	TI	**SN54198**	**992**
DM54199	Fairchild	54199	
	TI	**SN54199**	**993**
DM5420	Fairchild	5420	
	Signetics	**5420**	**528,860**
	TI	**SN5420**	**926**
DM5423	Fairchild	5423	
	TI	**SN5423**	**927**
DM5425	Fairchild	5425	
	TI	SN5425	
DM54251	National	DM7121	
		SM54251	
	TI	**SN54251**	**1003**
~~DM5426~~	~~**Signetics**~~	~~**5426**~~	~~**528,860**~~
	TI	**SN5426**	**928**
DM5427	Fairchild	5427	
	TI	**SN5427**	**929**
DM5430	Fairchild	5430	
	TI	**SN5430**	**929**
DM5432	Fairchild	5432	
	Signetics	**5432**	**528,860**
	TI	**SN5432**	**930**
DM5437	Fairchild	5437	
	TI	**SN5437**	**932**
DM5438	Fairchild	5438	
	TI	**SN5438**	**932**
DM5440	Fairchild	5440	
	TI	**SN5440**	**933**
DM5442	Fairchild	5442A	
	Signetics	**5442**	**860**
	TI	SN5442	
DM5445	Fairchild	5445	
	TI	**SN5445**	**934**
		SN5445A	
DM5446	Fairchild	5446A	
		9317B	
		9317C	
	Signetics	5446	
	TI	SN5446	
		SN5446A	**935**
DM5447	Fairchild	5447A	
	Signetics	5447	
	TI	SN5447	
		SN5447A	**935**
DM5448	Fairchild	5448	
	TI	**SN5448**	**935**
		SN5448A	
DM5450	Fairchild	5450	
	TI	**SN5450**	**936**
DM5451	Fairchild	5451	
	TI	SN5451	
DM5453	Fairchild	5453	
	TI	**SN5453**	**937**
DM5454	Fairchild	5454	
	TI	**SN5454**	**938**
DM5460	Fairchild	5460	
	TI	**SN5460**	**940**
DM5470	Fairchild	5470	
	TI	**SN5470**	**943**
DM5472	Fairchild	5472	
	TI	**SN5472**	**944**
DM5473	Fairchild	5473	
	Signetics	**5473**	**528,860**
	TI	**SN5473**	**944**
DM5474	Fairchild	5474	
	Signetics	**5474**	**528,860**
	TI	SN5474	
DM5475	Fairchild	5475	
	Signetics	**5475**	**860**
	TI	**SN5475**	**946**
DM5476	Fairchild	5476	
	Signetics	**5476**	**528,860**
	TI	**SN5476**	**946**
DM5485	Fairchild	5485	
	Signetics	**5485**	**528,860**
	TI	**SN5485**	**950**
DM5486	Fairchild	5486	
	Signetics	**5486**	**860**
	TI	**SN5486**	**950**
DM5488	Fairchild	5488	
	Signetics	S8224	
	TI	SN5488	
		SN5488A	
DM5489	AMD	SN5489-1	
		SN54S289	
		SN74S289	
	Fairchild	54S289	
	National	DM54S289	
		(Continued)	
DM5489	National	MM54S289	
	Signetics	54S289	
		54S301	**532**
		S8225	
		S82S25	
	TI	SN5489	
		SN54S289	
DM5490	Fairchild	5490	
	TI	SN5490	
		SN5490A	**952**
DM5491	Fairchild	5491A	
	Signetics	**5491**	**860**
	TI	SN5491	
		SN5491A	**952**
DM5492	Fairchild	5492	
	TI	SN5492	
		SN5492A	**952**
DM5493	Fairchild	5493A	
	Signetics	**5493**	**528,860**
	TI	SN5493	
		SN5493A	**953**
DM5495	Fairchild	5495A	
	TI	SN5495	
		SN5495A	**954**
DM5496	Fairchild	5496	
	Signetics	**5496**	**528,860**
	TI	**SN5496**	**954**
DM54ALS00	Motorola	SN54ALS00	
	TI	SN54ALS00	
DM54ALS01	**TI**	**SN54ALS01**	**920**
DM54ALS02	Motorola	SN54ALS02	
	TI	**SN54ALS02**	**920**
DM54ALS03	**TI**	**SN54ALS03**	**921**
DM54ALS04	Motorola	SN54ALS04	
	TI	**SN54ALS04**	**921**
DM54ALS05	**TI**	**SN54ALS05**	**921**
DM54ALS08	Motorola	SN54ALS08	
	TI	**SN54ALS08**	**921**
DM54ALS09	Motorola	SN54ALS09	
	TI	**SN54ALS09**	**923**
DM54ALS10	**TI**	**SN54ALS10**	**923**
DM54ALS1000	**TI**	**SN54ALS1000**	**1114**
DM54ALS1002	**TI**	**SN54ALS1002**	**1114**
DM54ALS1003	**TI**	**SN54ALS1003**	**1115**
DM54ALS1004	**TI**	**SN54ALS1004**	**1115**
DM54ALS1005	**TI**	**SN54ALS1004**	**1115**
DM54ALS1008	**TI**	**SN54ALS1008**	**1116**
DM54ALS1010	**TI**	**SN54ALS1010**	**1116**
DM54ALS1011	**TI**	**SN54ALS1011**	**1116**
DM54ALS1020	**TI**	**SN54ALS1020**	**1117**
DM54ALS1032	**TI**	**SN54ALS1032**	**1117**
DM54ALS1034	**TI**	**SN54ALS1034**	**1118**
DM54ALS1035	**TI**	**SN54ALS1035**	**1118**
DM54ALS109	**TI**	**SN54ALS109**	**958**
DM54ALS11	**TI**	**SN54ALS11**	**923**
DM54ALS112	**TI**	**SN54ALS112**	**959**
DM54ALS113	**TI**	**SN54ALS113**	**959**
DM54ALS114	**TI**	**SN54ALS114**	**960**
DM54ALS12	**TI**	**SN54ALS12**	**924**
DM54ALS1240	**TI**	**SN54ALS1240**	**1119**
DM54ALS1241	**TI**	**SN54ALS1241**	**1119**
DM54ALS1242	National	DM54ALS1243	
	TI	**SN54ALS1242**	**1119**
		SN54ALS1243	**1120**
DM54ALS1243	National	DM54ALS1242	
	TI	**SN54ALS1242**	**1119**
		SN54ALS1243	**1120**
DM54ALS1244	**TI**	**SN54ALS1244**	**1120**
DM54ALS131	**TI**	**SN54ALS131**	**964**
DM54ALS133	**TI**	**SN54ALS133**	**965**
DM54ALS137	**TI**	**SN54ALS137**	**967**
DM54ALS138	**TI**	**SN54ALS138**	**968**
DM54ALS15	**TI**	**SN54ALS15**	**925**
DM54ALS151	**TI**	**SN54ALS151**	**972**
DM54ALS153	**TI**	**SN54ALS153**	**972**
DM54ALS157	**TI**	**SN54ALS157**	**975**
DM54ALS158	**TI**	**SN54ALS158**	**975**
DM54ALS160	**Motorola**	**SN54ALS160**	**823**
	TI	**SN54ALS160**	**977**
DM54ALS161	**Motorola**	**SN54ALS161**	**823**
	TI	**SN54ALS161**	**977**
DM54ALS162	**Motorola**	**SN54ALS162**	**823**
	TI	**SN54ALS162**	**978**
DM54ALS163	**Motorola**	**SN54ALS163**	**823**
	TI	**SN54ALS163**	**978**
DM54ALS168	**TI**	**SN54ALS168**	**980**
DM54ALS169	**TI**	**SN54ALS169**	**980**
DM54ALS174	**TI**	**SN54ALS174**	**983**
DM54ALS175	**TI**	**SN54ALS175**	**983**
DM54ALS20	**TI**	**SN54ALS20**	**926**
DM54ALS21	**TI**	**SN54ALS21**	**927**
DM54ALS22	**TI**	**SN54ALS22**	**927**

◆ Discontinued

The manufacturers report their devices can be used as direct replacements.
Performance details often differ, so compare the specifications considering your requirements.

National Semiconductor (Cont'd)

Manufacturer Device	Replacement Source	Device	IC Master Page
DM54ALS240	**Motorola**	**SN54ALS240**	**823**
	TI	**SN54ALS240**	**998**
DM54ALS241	**Motorola**	**SN54ALS241**	**823**
	TI	**SN54ALS241**	**999**
DM54ALS242	**Motorola**	**SN54ALS242**	**823**
	TI	**SN54ALS242**	**999**
DM54ALS243	**Motorola**	**SN54ALS243**	**823**
	TI	**SN54ALS243**	**1000**
DM54ALS244	**Motorola**	**SN54ALS244**	**823**
	TI	**SN54ALS244**	**1000**
DM54ALS245	**Motorola**	**SN54ALS245**	**823**
	TI	**SN54ALS245**	**1001**
DM54ALS251	**TI**	**SN54ALS251**	**1003**
DM54ALS253	**TI**	**SN54ALS253**	**1003**
DM54ALS257	**TI**	**SN54ALS257**	**1004**
DM54ALS258	**TI**	**SN54ALS258**	**1005**
DM54ALS27	**TI**	**SN54ALS27**	**929**
DM54ALS273	**Motorola**	**SN54ALS273**	**823**
	TI	**SN54ALS273**	**1007**
DM54ALS28	**TI**	**SN54ALS28**	**929**
DM54ALS30	National	SN54ALS30	
DM54ALS32	**Motorola**	**SN54ALS32**	**822**
	TI	**SN54ALS32**	**930**
DM54ALS33	**TI**	**SN54ALS33**	**930**
DM54ALS352	**TI**	**SN54ALS352**	**1020**
DM54ALS353	National	SN54ALS353	
~~DM54ALS37~~	~~**TI**~~	~~**SN54ALS37**~~	~~**932**~~
DM54ALS373	**Motorola**	**SN54ALS373**	**823**
	TI	**SN54ALS373**	**1025**
DM54ALS374	**Motorola**	**SN54ALS374**	**823**
	TI	**SN54ALS374**	**1026**
DM54ALS377	**Motorola**	**SN54ALS377**	**823**
DM54ALS38	**TI**	**SN54ALS38**	**932**
DM54ALS40	**TI**	**SN54ALS40**	**933**
DM54ALS518	**TI**	**SN54ALS518**	**1044**
DM54ALS519	**TI**	**SN54ALS519**	**1044**
DM54ALS520	**TI**	**SN54ALS520**	**1044**
DM54ALS521	**TI**	**SN54ALS521**	**1044**
DM54ALS522	**TI**	**SN54ALS522**	**1044**
DM54ALS533	**TI**	**SN54ALS533**	**1047**
DM54ALS534	**TI**	**SN54ALS534**	**1047**
DM54ALS563	**TI**	**SN54ALS563**	**1052**
DM54ALS564	**TI**	**SN54ALS564**	**1052**
DM54ALS573	**Motorola**	**SN54ALS573**	**823**
	TI	**SN54ALS573**	**1054**
DM54ALS574	**Motorola**	**SN54ALS574**	**823**
	TI	**SN54ALS574**	**1054**
DM54ALS576	**Motorola**	**SN54ALS576**	**823**
	TI	**SN54ALS576**	**1055**
DM54ALS580	**Motorola**	**SN54ALS580**	**823**
	TI	**SN54ALS580**	**1056**
DM54ALS620	**Motorola**	**SN54ALS620**	**823**
	TI	**SN54ALS620**	**1066**
DM54ALS621	**Motorola**	**SN54ALS621**	**823**
	TI	**SN54ALS621**	**1066**
DM54ALS622	**Motorola**	**SN54ALS622**	**823**
DM54ALS623	**Motorola**	**SN54ALS623**	**823**
	TI	**SN54ALS623**	**1066**
DM54ALS640	**Motorola**	**SN54ALS640**	**823**
	TI	**SN54ALS640**	**1074**
DM54ALS641	**Motorola**	**SN54ALS641**	**823**
	TI	**SN54ALS641**	**1074**
DM54ALS642	**Motorola**	**SN54ALS642**	**823**
	TI	**SN54ALS642**	**1074**
DM54ALS643	**Motorola**	**SN54ALS643**	**823**
	TI	**SN54ALS643**	**1074**
DM54ALS644	**Motorola**	**SN54ALS644**	**823**
	TI	**SN54ALS644**	**1074**
DM54ALS645	**TI**	**SN54ALS645**	**1074**
DM54ALS646	**Motorola**	**SN54ALS646**	**823**
DM54ALS647	**Motorola**	**SN54ALS647**	**823**
DM54ALS648	**Motorola**	**SN54ALS648**	**823**
DM54ALS649	**Motorola**	**SN54ALS649**	**823**
DM54ALS689	**TI**	**SN54ALS689**	**1088**
DM54ALS690	**Motorola**	**SN54ALS690**	**823**
DM54ALS691	**Motorola**	**SN54ALS691**	**823**
DM54ALS692	**Motorola**	**SN54ALS692**	**823**
DM54ALS693	**Motorola**	**SN54ALS693**	**823**
DM54ALS696	**Motorola**	**SN54ALS696**	**823**
DM54ALS697	**Motorola**	**SN54ALS697**	**823**
~~DM54ALS698~~	~~**Motorola**~~	~~**SN54ALS698**~~	~~**823**~~
DM54ALS699	**Motorola**	**SN54ALS699**	**823**
DM54ALS74	**Motorola**	**SN54ALS74**	**823**
	TI	**SN54ALS74**	**945**
DM54ALS804	**TI**	**SN54ALS804**	**1094**
DM54ALS805	**TI**	**SN54ALS805**	**1095**
DM54ALS808	**TI**	**SN54ALS808**	**1095**
DM54ALS832	**TI**	**SN54ALS832**	**1098**
DM54ALS873	**Motorola**	**SN54ALS873**	**823**
	TI	**SN54ALS873**	**1106**
DM54ALS874	**Motorola**	**SN54ALS874**	**823**
	TI	**SN54ALS874**	**1106**
DM54ALS876	**Motorola**	**SN54ALS876**	**823**
	TI	**SN54ALS876**	**1107**
DM54ALS880	**Motorola**	**SN54ALS880**	**823**
	TI	**SN54ALS880**	**1109**
DM54AS00	**TI**	**SN54AS00**	**920**
DM54AS02	**TI**	**SN54AS02**	**920**
DM54AS04	**TI**	**SN54AS04**	**921**
DM54AS08	**TI**	**SN54AS08**	**922**
DM54AS10	**TI**	**SN54AS10**	**923**
DM54AS109	**TI**	**SN54AS109**	**958**
DM54AS11	**TI**	**SN54AS11**	**923**
DM54AS112	**TI**	**SN54AS112**	**959**
DM54AS113	**TI**	**SN54AS113**	**959**
DM54AS114	**TI**	**SN54AS114**	**960**
DM54AS151	**TI**	**SN54AS151**	**972**
DM54AS152	TI	SN54AS152	
DM54AS153	**TI**	**SN54AS153**	**972**
DM54AS157	**TI**	**SN54AS157**	**975**
DM54AS158	**TI**	**SN54AS158**	**975**
DM54AS160	**TI**	**SN54AS160**	**977**
DM54AS161	**TI**	**SN54AS161**	**977**
DM54AS162	**TI**	**SN54AS162**	**978**
DM54AS163	**TI**	**SN54AS163**	**978**
DM54AS168	**TI**	**SN54AS168**	**980**
DM54AS169	**TI**	**SN54AS169**	**980**
~~DM54AS174~~	~~**TI**~~	~~**SN54AS174**~~	~~**983**~~
DM54AS175	**TI**	**SN54AS175**	**983**
DM54AS181	TI	SN54AS181	
DM54AS20	**TI**	**SN54AS20**	**926**
DM54AS21	**TI**	**SN54AS21**	**927**
DM54AS230	**TI**	**SN54AS230**	**998**
DM54AS231	**TI**	**SN54AS231**	**998**
DM54AS240	**TI**	**SN54AS240**	**998**
DM54AS241	**TI**	**SN54AS241**	**999**
DM54AS242	**TI**	**SN54AS242**	**999**
DM54AS243	**TI**	**SN54AS243**	**1000**
DM54AS244	**TI**	**SN54AS244**	**1000**
DM54AS251	**TI**	**SN54AS251**	**1003**
DM54AS253	**TI**	**SN54AS253**	**1003**
DM54AS257	**TI**	**SN54AS257**	**1004**
DM54AS258	**TI**	**SN54AS258**	**1005**
DM54AS27	**TI**	**SN54AS27**	**929**
DM54AS280	**TI**	**SN54AS280**	**1009**
DM54AS30	**TI**	**SN54AS30**	**929**
DM54AS32	**TI**	**SN54AS32**	**930**
DM54AS34	**TI**	**SN54AS34**	**931**
DM54AS352	**TI**	**SN54AS352**	**1020**
DM54AS353	**TI**	**SN54AS353**	**1021**
DM54AS373	**TI**	**SN54AS373**	**1025**
DM54AS374	**TI**	**SN54AS374**	**1026**
DM54AS533	**TI**	**SN54AS533**	**1047**
DM54AS534	**TI**	**SN54AS534**	**1047**
DM54AS640	**TI**	**SN54AS640**	**1074**
DM54AS641	**TI**	**SN54AS641**	**1074**
DM54AS642	**TI**	**SN54AS642**	**1074**
DM54AS643	**TI**	**SN54AS643**	**1074**
DM54AS644	**TI**	**SN54AS644**	**1074**
DM54AS645	**TI**	**SN54AS645**	**1074**
DM54AS646	**TI**	**SN54AS646**	**1076**
DM54AS648	**TI**	**SN54AS648**	**1076**
DM54AS651	**TI**	**SN54AS651**	**1078**
DM54AS652	**TI**	**SN54AS652**	**1078**
DM54AS74	**TI**	**SN54AS74**	**945**
DM54H00	Fairchild	54H00	
	TI	**SN54H00**	**920**
DM54H01	Fairchild	54H01	
	TI	**SN54H01**	**920**
DM54H04	Fairchild	54H04	
	TI	**SN54H04**	**921**
DM54H05	Fairchild	54H05	
	TI	SN54H05	
DM54H08	Fairchild	54H08	
DM54H10	Fairchild	54H10	
	TI	**SN54H10**	**923**
DM54H103	Fairchild	54H103	
	TI	**SN54H103**	**956**
DM54H106	Fairchild	54H106	
	TI	**SN54H106**	**957**
DM54H108	Fairchild	54H108	
	~~**TI**~~	~~**SN54H108**~~	~~**958**~~
~~DM54H11~~	~~Fairchild~~	~~54H11~~	
	Motorola	MC3106	
	TI	**SN54H11**	**923**
DM54H20	Fairchild	54H20	
	TI	**SN54H20**	**926**
DM54H21	Fairchild	54H21	
	TI	**SN54H21**	**927**
DM54H22	Fairchild	54H22	
	TI	**SN54H22**	**927**
DM54H30	Fairchild	54H30	
	TI	**SN54H30**	**929**
DM54H40	Fairchild	54H40	
	TI	**SN54H40**	**933**
DM54H50	Fairchild	54H50	
	TI	**SN54H50**	**936**
DM54H51	Fairchild	54H51	
	TI	**SN54H51**	**936**
DM54H52	Fairchild	54H52	
	TI	**SN54H52**	**937**
DM54H53	Fairchild	54H53	
	TI	**SN54H53**	**937**
DM54H54	Fairchild	54H54	
	TI	**SN54H54**	**938**
DM54H55	Fairchild	54H55	
	TI	**SN54H55**	**939**
DM54H60	Fairchild	54H60	
	TI	**SN54H60**	**940**
DM54H61	Fairchild	54H61	
	TI	**SN54H61**	**940**
DM54H62	Fairchild	54H62	
	TI	**SN54H62**	**941**
DM54H71	Fairchild	54H71	
	TI	**SN54H71**	**943**
DM54H72	Fairchild	54H72	
	TI	**SN54H72**	**944**
DM54H74	Fairchild	54H74	
	~~**TI**~~	~~**SN54H74**~~	~~**945**~~
DM54H76	Fairchild	54H76	
	TI	**SN54H76**	**946**
DM54H78	Fairchild	54H78	
	TI	**SN54H78**	**947**
DM54L01	TI	SN54L01	
DM54L02	**TI**	**SN54L02**	**920**
DM54L03	**TI**	**SN54L03**	**921**
DM54L10	**TI**	**SN54L10**	**923**
DM54L164	National	DM76L70	
	TI	SN54L164	
DM54L192	National	DM75L60	
	TI	**SN54L192**	**990**
DM54L193	National	DM75L63	
	TI	**SN54L193**	**990**
DM54L20	**TI**	**SN54L20**	**926**
DM54L30	**TI**	**SN54L30**	**929**
DM54L42A	TI	SN54L42A	
DM54L51	**TI**	**SN54L51**	**936**
DM54L55	**TI**	**SN54L55**	**939**
DM54L71	**TI**	**SN54L71**	**943**
DM54L72	**TI**	**SN54L72**	**944**
DM54L73	**TI**	**SN54L73**	**944**
DM54L74	**TI**	**SN54L74**	**945**
DM54L75	**TI**	**SN54L75**	**946**
DM54L78	**TI**	**SN54L78**	**947**
DM54L85	**TI**	**SN54L85**	**950**
DM54L86	**TI**	**SN54L86**	**950**
DM54L90	**TI**	**SN54L90**	**952**
DM54L93	**TI**	**SN54L93**	**953**
DM54L95	**TI**	**SN54L95**	**954**
DM54L98	**TI**	**SN54L98**	**955**
DM54LS00	Fairchild	54LS00	
	Motorola	**SN54LS00**	**822**
	Signetics	**54LS00**	**529**
	TI	**SN54LS00**	**920**
DM54LS01	Fairchild	54LS01	
	Motorola	**SN54LS01**	**822**
	TI	**SN54LS01**	**920**
DM54LS02	Fairchild	54LS02	
	Motorola	**SN54LS02**	**822**
	Signetics	**54LS02**	**529**
	TI	**SN54LS02**	**920**
DM54LS03	Fairchild	54LS03	
	Motorola	**SN54LS03**	**822**
	TI	**SN54LS03**	**921**
DM54LS04	Fairchild	54LS04	
	Motorola	**SN54LS04**	**822**
	Signetics	**54LS04**	**529**
	TI	**SN54LS04**	**921**
DM54LS05	Fairchild	54LS05	
	Motorola	**SN54LS05**	**822**
	TI	**SN54LS05**	**921**
DM54LS08	Fairchild	54LS08	
	Motorola	**SN54LS08**	**822**
	Signetics	**54LS08**	**529**
	~~**TI**~~	~~**SN54LS08**~~	~~**922**~~
DM54LS09	Fairchild	54LS09	
	Motorola	**SN54LS09**	**822**
	TI	**SN54LS09**	**923**
DM54LS10	Fairchild	54LS10	
	Motorola	**SN54LS10**	**822**
		(Continued)	
DM54LS10	**Signetics**	**54LS10**	**529**
	TI	**SN54LS10**	**923**
DM54LS107A	Motorola	SN54LS107A	
	TI	SN54LS107	
		SN54LS107A	**957**
DM54LS109	Fairchild	54LS109	
	Motorola	SN54LS109A	
	National	DM54LS109A	
	Signetics	54LS109	
	TI	SN54LS109	
		SN54LS109A	**958**
DM54LS109A	Fairchild	54LS109	
	Motorola	SN54LS109A	
	National	DM54LS109	
	Signetics	54LS109	
	TI	SN54LS109	
		SN54LS109A	**958**
DM54LS11	Fairchild	54LS11	
	Motorola	**SN54LS11**	**822**
	TI	**SN54LS11**	**923**
DM54LS112	Fairchild	54LS112	
	Motorola	SN54LS112A	
	Signetics	54LS112	
	TI	SN54LS112	
		SN54LS112A	**959**
DM54LS113	Fairchild	54LS113	
	Motorola	SN54LS113A	
	Signetics	54LS113	
	TI	SN54LS113	
		SN54LS113A	
DM54LS114	Fairchild	54LS114	
	Motorola	SN54LS114A	
	National	DM54LS114A	
	TI	SN54LS114	
		SN54LS114A	**960**
DM54LS114A	Fairchild	54LS114	
	Motorola	SN54LS114A	
	National	DM54LS114	
	TI	SN54LS114	
		SN54LS114A	**960**
DM54LS12	Motorola	SN54LS12	
	TI	**SN54LS12**	**924**
DM54LS122	Motorola	SN54LS122	
	TI	**SN54LS122**	**961**
DM54LS123	Motorola	SN54LS123	
	TI	**SN54LS123**	**962**
DM54LS125	Motorola	SN54LS125A	
	Signetics	54LS125A	
	TI	**SN54LS125A**	**962**
DM54LS126	Fairchild	54LS126	
	Motorola	SN54LS126A	
	Signetics	54LS126A	
	TI	SN54LS126	
		SN54LS126A	**962**
DM54LS13	Fairchild	54LS13	
	Motorola	SN54LS13	
	TI	**SN54LS13**	**924**
		SN54S13	
DM54LS132	Motorola	SN54LS132	
	Signetics	**54LS132**	**529**
	TI	**SN54LS132**	**965**
DM54LS136	Fairchild	54LS136	
	Motorola	SN54LS136	
	Signetics	54LS136	
	TI	**SN54LS136**	**966**
DM54LS138	Fairchild	54LS138	
	Motorola	SN54LS138	
	Signetics	**54LS138**	**529**
	TI	**SN54LS138**	**968**
DM54LS139	Fairchild	54LS139	
	Motorola	SN54LS139	
	Signetics	**54LS139**	**529**
	TI	**SN54LS139**	**968**
DM54LS14	Fairchild	54LS14	
	Motorola	SN54LS14	
	Signetics	**54LS14**	**529**
	TI	**SN54LS14**	**924**
DM54LS15	Fairchild	54LS15	
	Motorola	SN54LS15	
	TI	**SN54LS15**	**925**
DM54LS151	Fairchild	54LS151	
	Motorola	SN54LS151	
	Signetics	54LS151	
	TI	**SN54LS151**	**972**
DM54LS153	Fairchild	54LS153	
	Motorola	SN54LS153	
	Signetics	**54LS153**	**529**
	TI	**SN54LS153**	**972**
DM54LS154	**Signetics**	**54LS154**	**529**
DM54LS155	Fairchild	54LS155	
	Motorola	SN54LS155	
	TI	**SN54LS155**	**974**

◆ Discontinued

Bold face device numbers indicate manufacturers data is provided in the IC Master on the pages noted.

© IC MASTER 1984

National Semiconductor (Cont'd)

Manufacturer Device	Replacement Source	Device	IC Master Page
DM54LS156	Fairchild	54LS156	
	Motorola	SN54LS156	
	TI	**SN54LS156**	**974**
DM54LS157	Fairchild	54LS157	
	Motorola	SN54LS157	
	Signetics	**54LS157**	**529**
	TI	**SN54LS157**	**975**
DM54LS158	Fairchild	54LS158	
	Motorola	SN54LS158	
	Signetics	54LS158	
	TI	**SN54LS158**	**975**
DM54LS160	**AMD**	**SN74S160**	**1427**
	Fairchild	93S10	
	Signetics	54LS160	
DM54LS160A	TI	SN54LS160	
DM54LS161A	Fairchild	54LS161A	
	Motorola	SN54LS161A	
	Signetics	**54LS161A**	**529**
	TI	**SN54LS161A**	**977**
DM54LS162A	Motorola	SN54LS162A	
	Signetics	54LS162A	
	TI	**SN54LS162A**	**978**
DM54LS163	TI	SN54LS163	
DM54LS163A	Motorola	SN54LS163A	
	Signetics	**54LS163A**	**529**
	TI	**SN54LS163A**	**978**
DM54LS164	Fairchild	54LS164	
	Motorola	SN54LS164	
	Signetics	**54LS164**	**529**
	TI	**SN54LS164**	**979**
DM54LS164A	Motorola	SN54LS164A	
	TI	SN54LS164A	
DM54LS168	Fairchild	54LS168	
	Motorola	SN54LS168	
	TI	SN54LS168	
DM54LS169	Fairchild	54LS169	
	Motorola	SN54LS169	
	TI	SN54LS169	
DM54LS170	Fairchild	54LS170	
	Motorola	SN54LS170	
	TI	**SN54LS170**	**981**
DM54LS173	Fairchild	54LS173	
	Motorola	SN54LS173A	
	Signetics	54LS173	
	TI	**SN54LS173A**	**982**
DM54LS174	Fairchild	54LS174	
	Motorola	SN54LS174	
	Signetics	**54LS174**	**529**
	TI	**SN54LS174**	**983**
DM54LS175	Fairchild	54LS175	
	Motorola	SN54LS175	
	Signetics	**54LS175**	**529**
	TI	**SN54LS175**	**983**
DM54LS189	Fairchild	54LS189	
	TI	SN54LS189	
		SN54LS189A	**988**
DM54LS190	Motorola	SN54LS190	
	Signetics	**54LS190**	**529**
	TI	**SN54LS190**	**989**
DM54LS191	Motorola	SN54LS191	
	Signetics	**54LS191**	**529**
	TI	**SN54LS191**	**989**
DM54LS192	Fairchild	54LS192	
	Motorola	SN54LS192	
	Raytheon	54LS192	
	Signetics	**54LS192**	**530**
	TI	**SN54LS192**	**990**
DM54LS193	Fairchild	54LS193	
	Motorola	SN54LS193	
	Signetics	**54LS193**	**530**
	TI	**SN54LS193**	**990**
DM54LS196	Motorola	SN54LS196	
	TI	**SN54LS196**	**991**
DM54LS197	Motorola	SN54LS197	
	Signetics	**54LS197**	**530**
	TI	**SN54LS197**	**992**
DM54LS20	Fairchild	54LS20	
	Motorola	SN54LS20	
	Signetics	**54LS20**	**529**
	TI	**SN54LS20**	**926**
DM54LS21	Fairchild	54LS21	
	Motorola	SN54LS21	
	TI	**SN54LS21**	**927**
DM54LS22	Fairchild	54LS22	
	Motorola	SN54LS22	
	TI	**SN54LS22**	**927**
DM54LS221	Motorola	SN54LS221	
	Signetics	54LS221	
	TI	**SN54LS221**	**994**
DM54LS245	Fairchild	54LS245	
	MMI	**SN54LS245**	**804**
	Motorola	SN54LS245	
	Signetics	**54LS245**	**530**
	TI	SN54LS245	
DM54LS247	Fairchild	54LS247	
	Motorola	SN54LS247	
	TI	**SN54LS247**	**1001**
DM54LS248	Fairchild	54LS248	
	Motorola	SN54LS248	
	Signetics	54LS248	
	TI	**SN54LS248**	**1002**
DM54LS249	Fairchild	54LS249	
	Motorola	SN54LS249	
	TI	**SN54LS249**	**1002**
DM54LS253	Fairchild	54LS253	
	Motorola	SN54LS253	
	National	DM7214	
	Signetics	54LS253	
	TI	**SN54LS253**	**1003**
DM54LS257	Signetics	54LS257	
	TI	SN54LS257	
DM54LS258	Signetics	54LS258	
	TI	SN54LS258	
DM54LS26	Fairchild	54LS26	
	Motorola	SN54LS26	
	TI	**SN54LS26**	**928**
DM54LS266	Fairchild	54LS266	
		9386	
	Motorola	SN54LS266	
	Signetics	**54LS266**	**530**
	TI	**SN54LS266**	**1007**
DM54LS27	Fairchild	54LS27	
	Motorola	SN54LS27	
	TI	**SN54LS27**	**929**
DM54LS279	Fairchild	54LS279	
	Motorola	SN54LS279	
	Signetics	54LS279	
	TI	**SN54LS279**	**1009**
DM54LS283	Fairchild	54LS283	
	Motorola	SN54LS283	
	Signetics	54LS283	
	TI	**SN54LS283**	**1011**
DM54LS289	Fairchild	54LS289	
	TI	SN54LS289	
		SN54LS289A	**1012**
DM54LS290	Motorola	SN54LS290	
	Signetics	**54LS290**	**530**
	TI	**SN54LS290**	**1012**
DM54LS293	Fairchild	54LS293	
	Motorola	SN54LS293	
	Signetics	**54LS293**	**530**
	TI	**SN54LS293**	**1014**
DM54LS30	Fairchild	54LS30	
	Motorola	SN54LS30	
	Signetics	54LS30	
	TI	**SN54LS30**	**929**
DM54LS32	Fairchild	54LS32	
	Signetics	**54LS32**	**529**
	TI	**SN54LS32**	**930**
DM54LS352	Fairchild	54LS352	
	Motorola	SN54LS352	
	TI	**SN54LS352**	**1020**
DM54LS353	Fairchild	54LS353	
	Motorola	SN54LS353	
	TI	**SN54LS353**	**1021**
DM54LS366	Fairchild	54LS366A	
	Motorola	SN54LS366A	
	Signetics	54LS366A	
	TI	**SN54LS366A**	**1023**
DM54LS367	Fairchild	54LS367A	
	Motorola	SN54LS367A	
	Signetics	54LS367	
		54LS367A	**530**
	TI	**SN54LS367A**	**1024**
DM54LS368	Fairchild	54LS368A	
	Motorola	SN54LS368A	
	Signetics	54LS368	
		54LS368A	**530**
	TI	**SN54LS368A**	**1024**
DM54LS37	Fairchild	54LS37	
	Motorola	SN54LS37	
	Signetics	**54LS37**	**529**
	TI	**SN54LS37**	**932**
DM54LS374	**MMI**	**SN54LS374**	**804**
	Motorola	SN54LS374	
	TI	**SN54LS374**	**1026**
DM54LS38	Fairchild	54LS38	
	Motorola	SN54LS38	
	TI	**SN54LS38**	**932**
DM54LS386	Motorola	SN54LS386	
	Raytheon	RM8241	

(Continued)

Manufacturer Device	Replacement Source	Device	IC Master Page
DM54LS386	Signetics	S82S41	
	TI	**SN54LS386**	**1030**
DM54LS395	Motorola	SN54LS395	
	Signetics	54LS395	
	TI	SN54LS395	
		SN54LS395A	**1031**
DM54LS40	Fairchild	54LS40	
	Motorola	SN54LS40	
	TI	**SN54LS40**	**933**
DM54LS42	Fairchild	54LS42	
	Motorola	SN54LS42	
	Signetics	**54LS42**	**529**
	TI	**SN54LS42**	**933**
DM54LS47	Fairchild	54LS47	
	Motorola	SN54LS47	
	TI	**SN54LS47**	**935**
DM54LS48	Fairchild	54LS48	
	Motorola	SN54LS48	
	TI	**SN54LS48**	**935**
DM54LS49	Fairchild	54LS49	
	Motorola	SN54LS49	
	TI	**SN54LS49**	**935**
DM54LS51	Fairchild	54LS51	
	Motorola	SN54LS51	
	Signetics	54LS51	
	TI	**SN54LS51**	**936**
DM54LS54	Fairchild	54LS54	
	Motorola	SN54LS54	
	TI	**SN54LS54**	**938**
DM54LS55	Fairchild	54LS55	
	Motorola	SN54LS55	
	TI	**SN54LS55**	**939**
DM54LS670	Fairchild	54LS670	
	Motorola	SN54LS670	
	Signetics	**54LS670**	**530**
	TI	**SN54LS670**	**1080**
DM54LS73	Motorola	SN54LS73A	
	National	DM54LS73A	
	Signetics	**54LS73**	**529**
	TI	SN54LS73	
		SN54LS73A	**944**
DM54LS73A	Motorola	SN54LS73A	
	National	DM54LS73	
	Signetics	**54LS73**	**529**
	TI	SN54LS73	
		SN54LS73A	**944**
DM54LS74	Fairchild	54LS74	
	Motorola	SN54LS74A	
	National	DM54LS74A	
	Signetics	54LS74	
	TI	SN54LS74	
		SN54LS74A	
			945,946
DM54LS74A	Fairchild	54LS74	
	Motorola	SN54LS74A	
	National	DM54LS74	
	Signetics	54LS74	
	TI	SN54LS74	
		SN54LS74A	
			945,946
DM54LS75	Motorola	SN54LS75	
	Signetics	**54LS75**	**529**
	TI	SN54LS75	
DM54LS76	Motorola	SN54LS76A	
	Signetics	54LS76	
	TI	SN54LS76	
		SN54LS76A	**946**
DM54LS77	Motorola	SN54LS77	
	TI	**SN54LS77**	**947**
DM54LS78	Motorola	SN54LS78A	
	TI	SN54LS78	
		SN54LS78A	**947**
DM54LS83A	Fairchild	54LS83A	
	Motorola	SN54LS83A	
	Signetics	54LS83	
		54LS83A	
	TI	**SN54LS83A**	**949**
DM54LS85	Fairchild	54LS85	
	Motorola	SN54LS85	
	Signetics	**54LS85**	**529**
	TI	**SN54LS85**	**950**
DM54LS86	Motorola	SN54LS86	
	Signetics	**54LS86**	**529**
	TI	**SN54LS86**	**950**
DM54LS90	Motorola	SN54LS90	
	Signetics	**54LS90**	**529**
	TI	**SN54LS90**	**952**
DM54LS92	Motorola	SN54LS92	
	Signetics	54LS92	
	TI	**SN54LS92**	**952**
DM54LS93	Fairchild	54LS93	
	Motorola	SN54LS93	

(Continued)

Manufacturer Device	Replacement Source	Device	IC Master Page
DM54LS93	**Signetics**	**54LS93**	**529**
	TI	**SN54LS93**	**953**
DM54LS95B	Fairchild	54LS95B	
	Motorola	SN54LS95B	
	Signetics	**54LS95B**	**529**
	TI	**SN54LS95B**	**954**
DM54S140	Fairchild	54S140	
	Signetics	**54S140**	**531**
	TI	**SN54S140**	**969**
DM54S188	AMD	AM27LS18	
	MMI	5330-1	
		53LS080	
		63LS080	
	National	DM7577	
	Signetics	**82S23**	**532**
DM54S189	AMD	SN54S189	
	Fairchild	54S189	
	Signetics	**54S189**	**532**
	TI	SN54S189	
DM54S200	Signetics	54S200	
		54S201	
		S82S116	
		82S16	**532**
	TI	SN54S201	
DM54S22	Fairchild	54S22	
	TI	**SN54S22**	**927**
DM54S287	**Harris**	**HM7611-2**	**3944**
	Intel	M3621	
	MMI	5301-1	
		53S141	**4026**
	Signetics	**82S129**	**532**
DM54S288	National	DM7678	
	TI	**TBP18S030M**	
			542,4237
DM54S289	AMD	SN5489-1	
		SN54S289	
		SN74S289	
	Fairchild	54S289	
	National	DM5489	
		MM54S289	
	Signetics	54S289	
		54S301	**532**
		S8225	
		S82S25	
	TI	SN5489	
		SN54S289	
DM54S387	**Harris**	**HM7610-2**	**3944**
	Intel	M3601	
	MMI	5300-1	
		53S140	**4026**
	Signetics	**82S126**	**532**
	TI	**TBP24SA10M**	
			542,4238
DM54S472	Fujitsu	MB7124E-W	
		MBM7124	
	MMI	5349-1	
	Signetics	**82S147**	**532**
	TI	DM54S472	
DM54S473	Fujitsu	MB7123E-W	
	MMI	5348-1	
	Signetics	S82S146	
DM54S474	Intel	M3624	
	MMI	5341-1	
	Signetics	**82S141**	**532**
	TI	**TBP28S46M**	
			542,543,4245
DM54S475	Intel	M3604	
	MMI	5340-1	
	National	DM77S295	
		DM87S295	
	Signetics	S82S140	
DM54S570	Intel	M3602	
	MMI	5305-1	
		53S240	**4026**
	Signetics	**82S130**	**532**
DM54S571	Intel	M3622	
	MMI	5306-1	
		53S241	**4026**
	Signetics	**82S131**	**532**
DM54S572	Fujitsu	MB7121E-W	
	Harris	**HM7642-2**	**3948**
	Intel	M3605	
	MMI	5352-1	
	Signetics	S82S136	
	TI	**TBP24SA41M**	**4239**
DM54S573	AMD	AM27S33M	
		AM27S41	**3907**
	Fairchild	93453M	
	Fujitsu	MB7122E-W	
		MB7152E-W	
	Harris	**HM7643-2**	**3948**
	MMI	**53S441**	**4026**

(Continued)

◆ Discontinued

The manufacturers report their devices can be used as direct replacements.
Performance details often differ, so compare the specifications considering your requirements.

National Semiconductor (Cont'd)

Manufacturer Device	Replacement Source	Device	IC Master Page
DM54S573	Motorola	MCM7643M	
	National	**DM54S573A**	**4057**
	Signetics	S82HS137	
		S82S137	**532**
		S82S195	**4182**
	TI	**TBP24S41M**	
			542,4239
DM54S573A	AMD	AM27S33M	
		AM27S41	**3907**
	Fairchild	93453M	
	Fujitsu	MB7122E-W	
		MB7152E-W	
	Harris	**HM7643-2**	**3948**
	MMI	**53S441**	**4026**
	Motorola	MCM7643M	
	National	**DM54S573**	**4057**
	Signetics	S82HS137	
		S82S137	**532**
		S82S195	**4182**
	TI	**TBP24S41M**	
			542,4239
DM7093	Fairchild	54125	
	National	DM54125	
	TI	**SN54125**	**963**
		SN54425	**1034**
DM7094	Fairchild	54126	
	National	DM54126	
	Signetics	**54126**	**528,861**
	TI	**SN54126**	**963**
		SN54426	**1034**
DM7095	Signetics	S8T95	
	TI	SN54365	
DM7096	TI	SN54366	
DM7097	**Signetics**	**S8T97**	**876**
	TI	SN54367	
DM7098	**Signetics**	**S8T98**	**876**
	TI	SN54368	
DM7121	National	DM54251	
		SM54251	
	TI	**SN54251**	**1003**
DM7123	AMD	SN74S257	
	Fairchild	74S257	
	Hitachi	HD74S257	
	National	DM74S257	
		DM8123	
	Signetics	74S257	
	TI	**SN74S257**	**1004**
DM7160	Fairchild	93S46	
		93S47	
	National	DM8160	
DM71L22	**TI**	**SN54L157**	**975**
DM7213	Fairchild	9311	
	Hitachi	HD74154	
	National	DM74154	
		DM8311	
	Raytheon	RC9311	
	Signetics	**74154**	**861**
	TI	SN29311	
		SN74154	**973**
DM7214	Fairchild	54LS253	
	Motorola	SN54LS253	
	National	DM54LS253	
	Signetics	54LS253	
	TI	**SN54LS253**	**1003**
DM7281	Fairchild	54177	
	National	DM54177	
	Raytheon	RM8281	
	Signetics	54177	
		S7281	
		S8281	
	TI	**SN54177**	**984**
DM7283	TI	SN54836	
DM7400	Fairchild	7400	
	Hitachi	HD7400	
	Signetics	**7400**	**860**
	TI	**SN7400**	**920**
	Toshiba	TC7400	
DM7401	Fairchild	7401	
	Hitachi	HD7401	
	TI	**SN7401**	**920**
DM7402	Fairchild	7402	
	Hitachi	HD7402	
	Signetics	**7402**	**860**
	TI	**SN7402**	**920**
DM7403	Fairchild	7403	
	Hitachi	HD7403	
	Signetics	**7403**	**860**
	TI	**SN7403**	**921**
DM7404	Fairchild	7404	
	Hitachi	HD7404	
	Signetics	**7404**	**860**
	TI	**SN7404**	**921**
	Toshiba	TC7404	
DM7405	Fairchild	7405	
	Hitachi	HD7405	
	Signetics	**7405**	**860**
	TI	**SN7405**	**921**
DM7406	Fairchild	7406	
	Hitachi	HD7406	
	Signetics	**7406**	**860**
	TI	**SN7406**	**922**
DM7407	Fairchild	7407	
	Hitachi	HD7407	
	Signetics	**7407**	**860**
	TI	**SN7407**	**922**
DM7408	Fairchild	7408	
	Hitachi	HD7408	
	Signetics	**7408**	**860**
	TI	**SN7408**	**922**
DM7409	Fairchild	7409	
	Hitachi	HD7409	
	TI	**SN7409**	**923**
DM7410	Fairchild	7410	
	Hitachi	HD7410	
	Signetics	**7410**	**860**
	TI	**SN7410**	**923**
	Toshiba	TC7410	
DM74107	Fairchild	74107	
	Hitachi	HD74107	
	Signetics	**74107**	**860**
	TI	**SN74107**	**957**
DM74109	**Signetics**	**74109**	**860**
	TI	**SN74109**	**958**
DM7411	Fairchild	7411	
	Hitachi	HD7411	
	Signetics	**7411**	**860**
DM74121	Fairchild	74121	
	Hitachi	HD74121	
	Signetics	**74121**	**860**
	TI	**SN74121**	**961**
DM74123	Fairchild	74123	
	Signetics	**74123**	**861**
	TI	**SN74123**	**962**
DM74125	Fairchild	74125	
	Hitachi	HD74125	
	National	DM8093	
	Signetics	**74125**	**861**
	TI	**SN74125**	**963**
		SN74425	**1034**
DM74126	Fairchild	74126	
	Hitachi	HD74126	
	National	DM8094	
	Signetics	**74126**	**861**
	TI	**SN74126**	**963**
		SN74426	**1034**
DM7413	Fairchild	7413	
	Hitachi	HD7413	
	Signetics	**7413**	**860**
	TI	**SN7413**	**924**
DM74132	Fairchild	74132	
	Hitachi	HD74132	
	Signetics	**74132**	**861**
	TI	**SN74132**	**965**
DM7414	Fairchild	7414	
	Hitachi	HD7414	
	Signetics	**7414**	**860**
	TI	**SN7414**	**924**
DM74141	Fairchild	74141	
		93141	
	Hitachi	HD74141	
		HD7441	
	National	DM7441	
	Signetics	74141	
		7441	
	TI	SN74141	
DM74145	Fairchild	74145	
	Hitachi	HD74145	
	Signetics	**74145**	**861**
	TI	**SN74145**	**970**
DM74147	Hitachi	HD14508	
		HD74147	
	Motorola	MC14508	
	RCA	CD4508	
	SGS	HCF4508	
	Signetics	**74147**	**861**
		HEF4508	
		N82147	
	SSS	SCL4508	
	Solitron	CM4508	

(Continued)

Manufacturer Device	Replacement Source	Device	IC Master Page
DM74147	**TI**	**SN74147**	**970**
	Toshiba	TC4508	
DM74148	Fairchild	9318	
	Hitachi	HD74148	
	National	DM8318	
	Signetics	**74148**	**861**
		N82148	
	TI	**SN74148**	**971**
DM74150	Fairchild	74150	
	Hitachi	HD74150	
	Signetics	**74150**	**861**
	TI	**SN74150**	**971**
DM74151	Fairchild	74151	
	Hitachi	HD74151	
	Signetics	**74151**	**861**
	TI	SN74151	
		SN74151A	**972**
DM74153	Fairchild	74153	
	Hitachi	HD74153	
	Signetics	**74153**	**861**
	TI	**SN74153**	**972**
DM74155	Fairchild	74155	
	Signetics	**74155**	**861**
	TI	**SN74155**	**974**
DM74156	Fairchild	74156	
	Hitachi	HD74156	
	Signetics	**74156**	**861**
	TI	**SN74156**	**974**
DM74157	Hitachi	HD74157	
	Signetics	**74157**	**861**
	TI	**SN74157**	**975**
DM7416	Fairchild	7416	
	Hitachi	HD7416	
	Signetics	**7416**	**860**
	TI	**SN7416**	**925**
DM74160	Fairchild	74160	
	Hitachi	HD74160	
	Signetics	**74160**	**861**
	TI	**SN74160**	**977**
DM74161	Fairchild	74161	
	Hitachi	HD74161	
	Signetics	**74161**	**861**
	TI	**SN74161**	**977**
DM74162	Fairchild	74162	
	Hitachi	HD74162	
	TI	**SN74162**	**978**
DM74163	Fairchild	74163	
	Hitachi	HD74163	
	Signetics	**74163**	**861**
	TI	**SN74163**	**978**
DM74164	AMD	SN74164	
	Fairchild	74164	
	Hitachi	HD74164	
	National	DM8570	
		DM8579	
	Signetics	**74164**	**861**
	TI	**SN74164**	**979**
DM74165	Fairchild	74165	
	National	DM8590	
	Signetics	**74165**	**861**
	TI	**SN74165**	**979**
DM74166	Fairchild	74166	
	Hitachi	HD74166	
	Signetics	**74166**	**861**
	TI	**SN74166**	**979**
DM7417	Fairchild	7417	
	Hitachi	HD7417	
	Signetics	**7417**	**860**
	TI	**SN7417**	**925**
DM74170	Fairchild	74170	
	Hitachi	HD74170	
	Signetics	**74170**	**861**
	TI	**SN74170**	**981**
DM74173	Fairchild	74173	
	National	DM8551	
	Raytheon	RC8T10	
	Signetics	**N8T10**	**876**
	TI	**SN74173**	**982**
DM74174	Fairchild	74174	
	Hitachi	HD74174	
	Signetics	**74174**	**861**
	TI	**SN74174**	**983**
DM74175	Fairchild	74175	
	Hitachi	HD74175	
	Signetics	**74175**	**861**
	TI	**SN74175**	**983**
DM74176	Fairchild	74176	
		96176	
	National	DM8280	
	Raytheon	RC8280	
	Signetics	74176	

(Continued)

Manufacturer Device	Replacement Source	Device	IC Master Page
DM74176	Signetics	N8280	
	TI	**SN74176**	**984**
DM74177	Fairchild	74177	
	National	DM8281	
	Raytheon	RC8281	
	Signetics	74177	
		N8281	
	TI	**SN74177**	**984**
DM74180	Fairchild	74180	
	Hitachi	HD74180	
	Signetics	**74180**	**861**
	TI	**SN74180**	**985**
DM74181	Fairchild	9341	
	Hitachi	HD74181	
	Raytheon	RC9341	
	Signetics	**74181**	**861**
	TI	**SN74181**	**985**
DM74182	Fairchild	9342	
	Hitachi	HD74182	
	TI	**SN74182**	**986**
DM74184	**TI**	**SN74184**	**987**
DM74185	TI	SN74185	
DM74185A	**TI**	**SN74185A**	**988**
DM74187	TI	SN74187	
DM74190	Fairchild	74190	
	Hitachi	HD74190	
	Signetics	**74190**	**861**
	TI	**SN74190**	**989**
DM74191	Fairchild	74191	
	Hitachi	HD74191	
	Signetics	**74191**	**861**
	TI	**SN74191**	**989**
DM74192	Fairchild	74192	
		9360	
	National	DM8560	
	Raytheon	RC9360	
	Signetics	**74192**	**861**
	TI	**SN74192**	**990**
DM74193	Fairchild	74193	
	National	DM8563	
	Signetics	**74193**	**861**
	TI	SN74129	
		SN74193	**990**
DM74194	Fairchild	74194	
	Hitachi	HD74194	
	Signetics	**74194**	**861**
	TI	**SN74194**	**990**
DM74195	Fairchild	74195	
	Signetics	**74195**	**861**
	TI	**SN74195**	**991**
DM74196	Fairchild	74196	
	National	DM8290	
	Raytheon	RC8290	
	Signetics	74196	
	TI	**SN74196**	**991**
DM74197	Fairchild	74197	
	National	DM8291	
	Raytheon	RC8291	
	Signetics	74197	
	TI	**SN74197**	**992**
DM74198	Fairchild	74198	
	Hitachi	HD74198	
	Signetics	74198	
	TI	**SN74198**	**992**
DM74199	Fairchild	74199	
	Signetics	**74199**	**861**
	TI	**SN74199**	**993**
DM7420	Fairchild	7420	
		9004	
	Hitachi	HD7420	
	National	DM9004C	
	Signetics	**7420**	**860**
	TI	**SN7420**	**926**
	Toshiba	TC7420	
DM7421	TI	SN7421	
DM7423	Fairchild	7423	
	TI	**SN7423**	**927**
DM7425	Fairchild	7425	
	TI	**SN7425**	**928**
DM74251	National	DM8121	
	TI	**SN74251**	**1003**
DM7426	Fairchild	7426	
	Hitachi	HD7426	
	National	DM8810	
	Signetics	**7426**	**860**
	TI	**SN7426**	**928**
DM7427	Fairchild	7427	
	Hitachi	HD7427	
	Signetics	**7427**	**860**
	TI	**SN7427**	**929**
DM7430	Fairchild	7430	
	Hitachi	HD7430	

(Continued)

Discontinued

Bold face device numbers indicate manufacturers data is provided in the IC Master on the pages noted.

© IC MASTER 1984

National Semiconductor (Cont'd)

Manufacturer Device	Replacement Source	Device	IC Master Page
DM7430	**Signetics**	**7430**	**860**
	TI	**SN7430**	**929**
DM7432	Fairchild	7432	
	Hitachi	HD7432	
	Signetics	**7432**	**860**
	TI	**SN7432**	**930**
DM7437	Fairchild	7437	
	Hitachi	HD7437	
	Signetics	**7437**	**860**
	TI	**SN7437**	**932**
DM7438	Fairchild	7438	
	Hitachi	HD7438	
	Signetics	**7438**	**860**
	TI	**SN7438**	**932**
DM7440	Fairchild	7440	
	Hitachi	HD7440	
	Signetics	**7440**	**860**
	TI	**SN7440**	**933**
DM7441	Fairchild	74141	
		93141	
	Hitachi	HD74141	
		HD7441	
	National	DM74141	
	Signetics	74141	
		7441	
	TI	SN74141	
DM7442	Fairchild	7442	
	Hitachi	HD7442	
	National	DM8842	
	Signetics	**7442**	**860**
	TI	SN7442	
		SN7442A	**933**
DM7445	Fairchild	7445	
	Hitachi	HD7445	
	Signetics	**7445**	**860**
	TI	**SN7445**	**934**
DM7447	Fairchild	7447	
	Hitachi	HD7447	
	TI	SN7447	
		SN7447A	**935**
DM7448	Fairchild	7448	
	~~National~~	~~DM8848~~	
	Signetics	N8T54	
	TI	**SN7448**	**935**
		SN7448A	
DM7450	Fairchild	7450	
	Hitachi	HD7450	
	Signetics	**7450**	**860**
	TI	**SN7450**	**936**
DM7451	Fairchild	7451	
	Hitachi	HD7451	
	Signetics	**7451**	**860**
	TI	SN7451	
DM7453	Fairchild	7453	
	Hitachi	HD7453	
	TI	**SN7453**	**937**
DM7454	Fairchild	7454	
	Hitachi	HD7454	
	TI	**SN7454**	**938**
DM7460	Fairchild	7460	
	Hitachi	HD7460	
	TI	**SN7460**	**940**
DM7470	Fairchild	7470	
	Hitachi	HD7470	
	TI	**SN7470**	**943**
DM7472	Fairchild	7472	
	Hitachi	HD7472	
	TI	**SN7472**	**944**
DM7473	Fairchild	7473	
	Hitachi	HD7473	
	Signetics	**7473**	**860**
	TI	**SN7473**	**944**
DM7474	Fairchild	7474	
	Hitachi	HD7474	
	Signetics	**7474**	**860**
	TI	SN7474	
DM7475	Fairchild	7475	
	Hitachi	HD7475	
	Signetics	**7475**	**860**
	TI	**SN7475**	**946**
DM7476	Fairchild	7476	
	Hitachi	HD7476	
	Signetics	**7476**	**860**
	TI	**SN7476**	**946**
DM7482	Hitachi	HD7482	
	TI	**SN7482**	**948**
DM7483	Fairchild	7483	
	Hitachi	HD7483	
	Signetics	**7483**	**860**
			(Continued)
DM7483	TI	SN7483	
		SN7483A	**949**
DM7485	Fairchild	7485	
	Hitachi	HD7485	
	Signetics	**7485**	**860**
	TI	**SN7485**	**950**
DM7486	Fairchild	7486	
	Hitachi	HD7486	
	Signetics	**7486**	**860**
	TI	**SN7486**	**950**
DM7488	Fairchild	7488	
	Motorola	MC4002	
	Signetics	7488	
		N8224	
	TI	SN7488	
		SN7488A	
DM7489	Fairchild	7489	
	Hitachi	HD7489	
		HD74S289	
	National	DM74S289	
		DM8589	
		MM74S289	
	Signetics	74S289	
		N82S25	
	TI	SN74S289	
DM7490	Fairchild	7490	
	Hitachi	HD7490	
	Signetics	**7490**	**860**
	TI	SN7490	
		SN7490A	**952**
DM7491	Fairchild	7491	
	Hitachi	HD7491	
	Signetics	**7491**	**860**
	TI	SN7491	
		SN7491A	**952**
DM7492	Fairchild	7492	
	Hitachi	HD7492	
	Signetics	**7492**	**860**
	TI	SN7492	
		SN7492A	**952**
DM7493	Fairchild	7493	
	Hitachi	HD7493	
	Signetics	**7493**	**860**
	TI	SN7493	
		SN7493A	**953**
DM7495	Fairchild	7495	
	Hitachi	HD7495	
	Signetics	7495	
	TI	SN7495	
		SN7495A	**954**
DM7496	Fairchild	7496	
	Hitachi	HD7496	
	Signetics	**7496**	**860**
	TI	**SN7496**	**954**
DM74ALS00	**Motorola**	**SN74ALS00**	**822**
	TI	SN74ALS00	
DM74ALS01	**TI**	**SN74ALS01**	**920**
DM74ALS02	**Motorola**	**SN74ALS02**	**822**
	TI	**SN74ALS02**	**920**
DM74ALS03	**TI**	**SN74ALS03**	**921**
DM74ALS04	**Motorola**	**SN74ALS04**	**822**
	TI	**SN74ALS04**	**921**
DM74ALS05	**TI**	**SN74ALS05**	**921**
DM74ALS08	**Motorola**	**SN74ALS08**	**822**
	TI	**SN74ALS08**	**922**
DM74ALS09	**Motorola**	**SN74ALS09**	**822**
	TI	**SN74ALS09**	**923**
DM74ALS10	**TI**	**SN74ALS10**	**923**
DM74ALS1000	**TI**	**SN74ALS1000**	**1114**
DM74ALS1002	**TI**	**SN74ALS1002**	**1114**
DM74ALS1003	**TI**	**SN74ALS1003**	**1115**
DM74ALS1004	**TI**	**SN74ALS1004**	**1115**
DM74ALS1005	**TI**	**SN74ALS1005**	**1115**
DM74ALS1008	**TI**	**SN74ALS1008**	**1116**
DM74ALS1010	**TI**	**SN74ALS1010**	**1116**
DM74ALS1011	**TI**	**SN74ALS1011**	**1116**
DM74ALS1020	**TI**	**SN74ALS1020**	**1117**
DM74ALS1032	**TI**	**SN74ALS1032**	**1117**
DM74ALS1034	**TI**	**SN74ALS1034**	**1118**
DM74ALS1035	**TI**	**SN74ALS1035**	**1118**
DM74ALS109	**TI**	**SN74ALS109**	**958**
DM74ALS11	**TI**	**SN74ALS11**	**923**
DM74ALS112	**TI**	**SN74ALS112**	**959**
DM74ALS113	**TI**	**SN74ALS113**	**959**
DM74ALS114	**TI**	**SN74ALS114**	**960**
DM74ALS12	**TI**	**SN74ALS12**	**924**
DM74ALS1240	**TI**	**SN74ALS1240**	**1119**
DM74ALS1241	National	DM74ALS1242	
	TI	**SN74ALS1241**	**1119**
		SN74ALS1242	**1119**
DM74ALS1242	National	DM74ALS1241	
	TI	**SN74ALS1241**	**1119**
		SN74ALS1242	**1119**
DM74ALS1243	**TI**	**SN74ALS1243**	**1120**
DM74ALS1244	**TI**	**SN74ALS1244**	**1120**
DM74ALS131	**TI**	**SN74ALS131**	**964**
DM74ALS133	**TI**	**SN74ALS133**	**965**
DM74ALS137	**TI**	**SN74ALS137**	**967**
DM74ALS138	**TI**	**SN74ALS138**	**968**
DM74ALS15	**TI**	**SN74ALS15**	**925**
DM74ALS151	TI	SN74ALS151	
DM74ALS153	**TI**	**SN74ALS153**	**972**
DM74ALS157	**TI**	**SN74ALS157**	**975**
DM74ALS158	**TI**	**SN74ALS158**	**975**
DM74ALS160	**Motorola**	**SN74ALS160**	**823**
	TI	**SN74ALS160**	**977**
DM74ALS161	**Motorola**	**SN74ALS161**	**823**
	TI	**SN74ALS161**	**977**
DM74ALS162	**Motorola**	**SN74ALS162**	**823**
	TI	**SN74ALS162**	**978**
DM74ALS163	**Motorola**	**SN74ALS163**	**823**
	TI	**SN74ALS163**	**978**
DM74ALS168	**TI**	**SN74ALS168**	**980**
DM74ALS169	**TI**	**SN74ALS169**	**980**
DM74ALS174	**TI**	**SN74ALS174**	**983**
DM74ALS175	**TI**	**SN74ALS175**	**983**
DM74ALS20	**TI**	**SN74ALS20**	**926**
DM74ALS21	**TI**	**SN74ALS21**	**927**
DM74ALS22	**TI**	**SN74ALS22**	**927**
DM74ALS240	**Motorola**	**SN74ALS240**	**823**
	TI	**SN74ALS240**	**998**
DM74ALS241	**Motorola**	**SN74ALS241**	**823**
	TI	**SN74ALS241**	**999**
DM74ALS242	**Motorola**	**SN74ALS242**	**823**
	TI	**SN74ALS242**	**999**
DM74ALS243	**Motorola**	**SN74ALS243**	**823**
	TI	**SN74ALS243**	**1000**
DM74ALS244	**Motorola**	**SN74ALS244**	**823**
	TI	**SN74ALS244**	**1000**
DM74ALS245	**Motorola**	**SN74ALS245**	**823**
	TI	**SN74ALS245**	**1001**
DM74ALS251	**TI**	**SN74ALS251**	**1003**
DM74ALS253	**TI**	**SN74ALS253**	**1003**
DM74ALS257	**TI**	**SN74ALS257**	**1004**
DM74ALS258	**TI**	**SN74ALS258**	**1005**
DM74ALS27	**TI**	**SN74ALS27**	**929**
DM74ALS273	**Motorola**	**SN74ALS273**	**823**
	TI	**SN74ALS273**	**1007**
DM74ALS28	**TI**	**SN74ALS28**	**929**
DM74ALS30	**TI**	**SN74ALS30**	**929**
DM74ALS32	**Motorola**	**SN74ALS32**	**822**
	TI	**SN74ALS32**	**930**
DM74ALS33	**TI**	**SN74ALS33**	**930**
DM74ALS352	**TI**	**SN74ALS352**	**1020**
DM74ALS353	**TI**	**SN74ALS353**	**1021**
DM74ALS37	**TI**	**SN74ALS37**	**932**
DM74ALS373	**Motorola**	**SN74ALS373**	**823**
	TI	**SN74ALS373**	**1025**
DM74ALS374	**Motorola**	**SN74ALS374**	**823**
	TI	**SN74ALS374**	**1026**
DM74ALS377	**Motorola**	**SN74ALS377**	**823**
DM74ALS38	**TI**	**SN74ALS38**	**932**
DM74ALS40	**TI**	**SN74ALS40**	**933**
DM74ALS518	**TI**	**SN74ALS518**	**1044**
DM74ALS519	**TI**	**SN74ALS519**	**1044**
DM74ALS520	**TI**	**SN74ALS520**	**1044**
DM74ALS521	**TI**	**SN74ALS521**	**1044**
DM74ALS522	**TI**	**SN74ALS522**	**1044**
DM74ALS533	**TI**	**SN74ALS533**	**1047**
DM74ALS534	**TI**	**SN74ALS534**	**1047**
DM74ALS563	**TI**	**SN74ALS563**	**1052**
DM74ALS564	**TI**	**SN74ALS564**	**1052**
DM74ALS573	**Motorola**	**SN74ALS573**	**823**
	TI	**SN74ALS573**	**1054**
DM74ALS574	**Motorola**	**SN74ALS574**	**823**
	TI	**SN74ALS574**	**1054**
DM74ALS576	**Motorola**	**SN74ALS576**	**823**
	TI	**SN74ALS576**	**1055**
DM74ALS580	**Motorola**	**SN74ALS580**	**823**
	TI	**SN74ALS580**	**1056**
DM74ALS620	**Motorola**	**SN74ALS620**	**823**
	TI	**SN74ALS620**	**1066**
DM74ALS621	**Motorola**	**SN74ALS621**	**823**
	TI	**SN74ALS621**	**1066**
DM74ALS622	**Motorola**	**SN74ALS622**	**823**
DM74ALS623	**Motorola**	**SN74ALS623**	**823**
	TI	**SN74ALS623**	**1066**
DM74ALS640	**Motorola**	**SN74ALS640**	**823**
	TI	**SN74ALS640**	**1074**
DM74ALS641	**Motorola**	**SN74ALS641**	**823**
	TI	**SN74ALS641**	**1074**
DM74ALS642	**Motorola**	**SN74ALS642**	**823**
	TI	**SN74ALS642**	**1074**
DM74ALS643	**Motorola**	**SN74ALS643**	**823**
	TI	**SN74ALS643**	**1074**
DM74ALS644	**Motorola**	**SN74ALS644**	**823**
	TI	**SN74ALS644**	**1074**
DM74ALS645	**TI**	**SN74ALS645**	**1074**
DM74ALS646	**Motorola**	**SN74ALS646**	**823**
DM74ALS647	**Motorola**	**SN74ALS647**	**823**
DM74ALS648	**Motorola**	**SN74ALS648**	**823**
DM74ALS649	**Motorola**	**SN74ALS649**	**823**
DM74ALS689	**TI**	**SN74ALS689**	**1088**
DM74ALS690	**Motorola**	**SN74ALS690**	**823**
DM74ALS691	**Motorola**	**SN74ALS691**	**823**
DM74ALS692	**Motorola**	**SN74ALS692**	**823**
DM74ALS693	**Motorola**	**SN74ALS693**	**823**
DM74ALS697	**Motorola**	**SN74ALS697**	**823**
DM74ALS698	**Motorola**	**SN74ALS698**	**823**
DM74ALS699	**Motorola**	**SN74ALS699**	**823**
DM74ALS74	**Motorola**	**SN74ALS74**	**823**
	TI	**SN74ALS74**	**945**
DM74ALS804	**TI**	**SN74ALS804**	**1094**
DM74ALS805	**TI**	**SN74ALS805**	**1095**
DM74ALS808	**TI**	**SN74ALS808**	**1095**
DM74ALS832	**TI**	**SN74ALS832**	**1098**
DM74ALS873	**Motorola**	**SN74ALS873**	**823**
	TI	**SN74ALS873**	**1106**
DM74ALS874	**Motorola**	**SN74ALS874**	**823**
	TI	**SN74ALS874**	**1106**
DM74ALS876	**Motorola**	**SN74ALS876**	**823**
	TI	**SN74ALS876**	**1107**
DM74ALS880	**Motorola**	**SN74ALS880**	**823**
	TI	**SN74ALS880**	**1109**
DM74AS00	**TI**	**SN74AS00**	**920**
DM74AS02	**TI**	**SN74AS02**	**920**
DM74AS04	**TI**	**SN74AS04**	**921**
DM74AS08	**TI**	**SN74AS08**	**922**
DM74AS10	**TI**	**SN74AS10**	**923**
DM74AS109	**TI**	**SN74AS109**	**958**
DM74AS11	**TI**	**SN74AS11**	**923**
DM74AS112	**TI**	**SN74AS112**	**959**
DM74AS113	**TI**	**SN74AS113**	**959**
DM74AS114	**TI**	**SN74AS114**	**960**
DM74AS151	**TI**	**SN74AS151**	**972**
DM74AS152	TI	SN74AS152	
DM74AS153	TI	SN74AS153	
DM74AS157	**TI**	**SN74AS157**	**975**
DM74AS158	**TI**	**SN74AS158**	**975**
DM74AS160	**TI**	**SN74AS160**	**977**
DM74AS161	**TI**	**SN74AS161**	**977**
DM74AS162	SN74AS162		
DM74AS163	**TI**	**SN74AS163**	**978**
DM74AS168	**TI**	**SN74AS168**	**980**
DM74AS169	**TI**	**SN74AS169**	**980**
DM74AS174	**TI**	**SN74AS174**	**983**
DM74AS175	**TI**	**SN74AS175**	**983**
DM74AS181	TI	SN74AS181	
DM74AS20	**TI**	**SN74AS20**	**926**
DM74AS21	**TI**	**SN74AS21**	**927**
DM74AS230	**TI**	**SN74AS230**	**998**
DM74AS231	**TI**	**SN74AS231**	**998**
DM74AS240	**TI**	**SN74AS240**	**998**
DM74AS241	**TI**	**SN74AS241**	**999**
DM74AS242	**TI**	**SN74AS242**	**999**
DM74AS243	**TI**	**SN74AS243**	**1000**
DM74AS244	**TI**	**SN74AS244**	**1000**
DM74AS251	**TI**	**SN74AS251**	**1003**
DM74AS253	**TI**	**SN74AS253**	**1003**
DM74AS257	**TI**	**SN74AS257**	**1004**
DM74AS258	**TI**	**SN74AS258**	**1005**
DM74AS27	**TI**	**SN74AS27**	**929**
DM74AS280	**TI**	**SN74AS280**	**1009**
DM74AS30	**TI**	**SN74AS30**	**929**
DM74AS32	**TI**	**SN74AS32**	**930**
DM74AS34	**TI**	**SN74AS34**	**931**
DM74AS352	**TI**	**SN74AS352**	**1020**
DM74AS353	**TI**	**SN74AS353**	**1021**
DM74AS373	**TI**	**SN74AS373**	**1025**
DM74AS374	**TI**	**SN74AS374**	**1026**
DM74AS533	**TI**	**SN74AS533**	**1047**
DM74AS534	**TI**	**SN74AS534**	**1047**
DM74AS640	**TI**	**SN74AS640**	**1074**
DM74AS641	**TI**	**SN74AS641**	**1074**
DM74AS642	**TI**	**SN74AS642**	**1074**
DM74AS643	**TI**	**SN74AS643**	**1074**
DM74AS644	SN74AS644		
DM74AS645	**TI**	**SN74AS645**	**1074**
DM74AS646	**TI**	**SN74AS646**	**1076**
DM74AS648	**TI**	**SN74AS648**	**1076**
DM74AS651	**TI**	**SN74AS651**	**1078**
DM74AS652	**TI**	**SN74AS652**	**1078**
DM74AS74	**TI**	**SN74AS74**	**945**

◆ Discontinued

The manufacturers report their devices can be used as direct replacements.
Performance details often differ, so compare the specifications considering your requirements.

National Semiconductor (Cont'd)

Manufacturer Device	Replacement Source	Device	IC Master Page
DM74H00	Fairchild	74H00	
	TI	**SN74H00**	**920**
DM74H01	Fairchild	74H01	
		74H08	
	National	DM74H08	
	TI	**SN74H01**	**920**
DM74H04	Fairchild	74H04	
	TI	**SN74H04**	**921**
DM74H08	Fairchild	74H01	
		74H08	
	National	DM74H01	
	TI	**SN74H01**	**920**
DM74H10	Fairchild	74H10	
	TI	**SN74H10**	**923**
DM74H103	Fairchild	74H103	
	TI	**SN74H103**	**956**
DM74H106	Fairchild	74H106	
	TI	**SN74H106**	**957**
DM74H108	Fairchild	74H108	
	TI	**SN74H108**	**958**
DM74H11	Fairchild	74H11	
	TI	**SN74H11**	**923**
DM74H20	Fairchild	74H20	
	TI	**SN74H20**	**926**
DM74H21	Fairchild	74H21	
	TI	**SN74H21**	**927**
DM74H30	Fairchild	74H30	
	TI	**SN74H30**	**929**
DM74H40	Fairchild	74H40	
	TI	**SN74H40**	**933**
DM74H50	Fairchild	74H50	
	TI	**SN74H50**	**936**
DM74H51	Fairchild	74H51	
	TI	**SN74H51**	**936**
DM74H62	Fairchild	74H62	
	TI	**SN74H62**	**941**
DM74H74	Fairchild	74H74	
	TI	**SN74H74**	**945**
DM74L164	National	DM86L70	
DM74L192	National	DM85L60	
DM74L193	National	DM85L63	
DM74LS00	Fairchild	74LS00	
	Hitachi	HD74LS00	
	Motorola	SN74LS00	
	SGS	T74LS00	
	Signetics	74LS00	
	TI	**SN74LS00**	**920**
DM74LS01	Fairchild	74LS01	
	Hitachi	HD74LS01	
	Motorola	SN74LS01	
	Signetics	74LS01	
	TI	**SN74LS01**	**920**
DM74LS02	Fairchild	74LS02	
	Hitachi	HD74LS02	
	Motorola	SN74LS02	
	SGS	T74LS02	
	Signetics	74LS02	
	TI	**SN74LS02**	**920**
DM74LS03	Fairchild	74LS03	
	Hitachi	HD74LS03	
	Motorola	SN74LS03	
	SGS	T74LS03	
	TI	**SN74LS03**	**921**
DM74LS04	Fairchild	74LS04	
	Hitachi	HD74LS04	
	Motorola	SN74LS04	
	SGS	T74LS04	
	Signetics	74LS04	
	TI	**SN74LS04**	**921**
DM74LS05	Fairchild	74LS05	
	Hitachi	HD74LS05	
	Motorola	SN74LS05	
	NEC	μPB74LS05	
	SGS	T74LS05	
	Signetics	74LS05	
	TI	**SN74LS05**	**921**
DM74LS08	Fairchild	74LS08	
	Hitachi	HD74LS08	
	Motorola	SN74LS08	
	SGS	T74LS08	
	Signetics	74LS08	
	TI	**SN74LS08**	**922**
DM74LS09	Fairchild	74LS09	
	Hitachi	HD74LS09	
	Motorola	SN74LS09	
	SGS	T74LS09	
	TI	**SN74LS09**	**923**
DM74LS10	Fairchild	74LS10	
	Hitachi	HD74LS10	

(Continued)

Manufacturer Device	Replacement Source	Device	IC Master Page
DM74LS10	Motorola	SN74LS10	
	SGS	T74LS10	
	Signetics	74LS10	
	TI	**SN74LS10**	**923**
DM74LS107	Hitachi	HD74LS107	
	Motorola	SN74LS107A	
	Signetics	74LS107	
	TI	SN74LS107	
		SN74LS107A	**957**
DM74LS109	Fairchild	74LS109	
	Hitachi	HD74LS109	
	Motorola	SN74LS109	
		SN74LS109A	
	SGS	T74LS109	
	Signetics	74LS109	
	TI	**SN74LS109A**	**958**
DM74LS11	Fairchild	74LS11	
	Hitachi	HD74LS11	
	Motorola	SN74LS11	
	SGS	T74LS11	
	Signetics	74LS11	
	TI	**SN74LS11**	**923**
DM74LS112	Fairchild	74LS112	
	Hitachi	HD74LS112	
	Motorola	SN74LS112A	
	SGS	T74LS112	
	Signetics	74LS112	
	TI	**SN74LS112A**	**959**
DM74LS113	Fairchild	74LS113	
	Hitachi	HD74LS113	
	Motorola	SN74LS113A	
	SGS	T74LS113	
	Signetics	74LS113	
	TI	**SN74LS113A**	**959**
DM74LS114	Fairchild	74LS114	
	Hitachi	HD74LS114	
	Motorola	SN74LS114A	
	SGS	T74LS114	
	TI	**SN74LS114A**	**960**
DM74LS12	Hitachi	HD74LS12	
	Motorola	SN74LS12	
	Signetics	74LS12	
	TI	**SN74LS12**	**924**
DM74LS122	Hitachi	HD74LS122	
	Motorola	SN74LS122	
	TI	**SN74LS122**	**961**
DM74LS123	Hitachi	HD74LS123	
	Motorola	SN74LS123	
	TI	**SN74LS123**	**962**
DM74LS125	Fairchild	74LS125A	
	Motorola	SN74LS125A	
	SGS	T74LS125	
	Signetics	74LS125A	
	TI	**SN74LS125A**	**962**
DM74LS126	Fairchild	74LS126	
	Motorola	SN74LS126A	
	SGS	T74LS126	
	Signetics	74LS126A	
	TI	**SN74LS126A**	**962**
DM74LS13	Fairchild	74LS13	
	Hitachi	HD74LS13	
	Motorola	SN74LS13	
	Signetics	74LS13	
	TI	**SN74LS13**	**924**
DM74LS132	Fairchild	74LS132	
	Hitachi	HD74LS132	
	Motorola	SN74LS132	
	SGS	T74LS132	
	Signetics	74LS132	
	TI	**SN74LS132**	**965**
DM74LS136	Fairchild	74LS136	
	Hitachi	HD74LS136	
	Motorola	SN74LS136	
	SGS	T74LS136	
	Signetics	74LS136	
	TI	**SN74LS136**	**966**
DM74LS138	Fairchild	74LS138	
	Hitachi	HD74LS138	
	Motorola	SN74LS138	
	SGS	T74LS138	
	Signetics	74LS138	
	TI	**SN74LS138**	**968**
DM74LS139	Fairchild	74LS139	
	Hitachi	HD74LS139	
	Motorola	SN74LS139	
	SGS	T74LS139	
	Signetics	74LS139	
	TI	**SN74LS139**	**968**
DM74LS14	Fairchild	74LS14	
	Hitachi	HD74LS14	
	Motorola	SN74LS14	

(Continued)

Manufacturer Device	Replacement Source	Device	IC Master Page
DM74LS14	Signetics	74LS14	
	TI	**SN74LS14**	**924**
DM74LS15	Fairchild	74LS15	
	Hitachi	HD74LS15	
	Motorola	SN74LS15	
	SGS	T74LS15	
	TI	**SN74LS15**	**925**
DM74LS151	Fairchild	74LS151	
	Hitachi	HD74LS151	
		HD74LS151A	
	Motorola	SN74LS151	
	SGS	T74LS151	
	Signetics	74LS151	
	TI	**SN74LS151**	**972**
DM74LS153	Fairchild	74LS153	
	Hitachi	HD74LS153	
	Motorola	SN74LS153	
	SGS	T74LS153	
	Signetics	74LS153	
	TI	**SN74LS153**	**972**
DM74LS154	Signetics	74LS154	
DM74LS155	Fairchild	74LS155	
	Hitachi	HD74LS155	
	Motorola	SN74LS155	
	Signetics	74LS155	
	TI	**SN74LS155**	**974**
DM74LS156	Fairchild	74LS156	
	Hitachi	HD74LS156	
	Motorola	SN74LS156	
	SGS	T74LS156	
	Signetics	74LS156	
	TI	**SN74LS156**	**974**
DM74LS157	Fairchild	74LS157	
	Hitachi	HD74LS157	
	Motorola	SN74LS157	
	SGS	T74LS157	
	Signetics	74LS157	
	TI	**SN74LS157**	**975**
DM74LS158	Fairchild	74LS158	
	Hitachi	HD74LS158	
	Motorola	SN74LS158	
	SGS	T74LS158	
	Signetics	74LS158	
	TI	**SN74LS158**	**975**
DM74LS160	Fairchild	74LS160	
	Hitachi	HD74LS160A	
	Motorola	SN74LS160A	
	SGS	T74LS160	
	Signetics	74LS160	
		74LS160A	
	TI	**SN74LS160A**	**977**
DM74LS161	Fairchild	74LS161A	
	Hitachi	HD74LS161A	
	Motorola	SN74LS161A	
	NEC	μPB74LS161	
	SGS	T74LS161	
	Signetics	74LS161A	
	TI	**SN74LS161A**	**977**
DM74LS162	Fairchild	74LS162	
	Hitachi	HD74LS162A	
	Motorola	SN74LS162A	
	SGS	T74LS162	
	Signetics	74LS162A	
	TI	**SN74LS162A**	**978**
DM74LS163	Fairchild	74LS163	
	Hitachi	HD74LS163	
		HD74LS163A	
	Motorola	SN74LS163A	
	SGS	T74LS163	
	Signetics	74LS163A	
	TI	**SN74LS163A**	**978**
DM74LS164	Fairchild	74LS164	
	Hitachi	HD74LS164	
	Motorola	SN74LS164A	
	SGS	T74LS164	
	Signetics	74LS164	
		74LS164A	
	TI	**SN74LS164**	**979**
DM74LS168	Fairchild	74LS168	
	Hitachi	HD74LS168	
	Motorola	SN74LS168	
	Signetics	74LS168A	
	TI	SN74LS168	
DM74LS169	Fairchild	74LS169	
	Hitachi	HD74LS169	
	Motorola	SN74LS169	
	Signetics	74LS169A	
DM74LS170	Fairchild	74LS170	
	Motorola	SN74LS170	
	SGS	T74LS170	
	Signetics	74LS170	
	TI	**SN74LS170**	**981**

Manufacturer Device	Replacement Source	Device	IC Master Page
DM74LS173	Fairchild	74LS173	
	Motorola	SN74LS173A	
	SGS	T74LS173	
	Signetics	74LS173	
	TI	**SN74LS173A**	**982**
DM74LS174	Fairchild	74LS174	
	Hitachi	HD74LS174	
	Motorola	SN74LS174	
	SGS	T74LS174	
	Signetics	74LS174	
	TI	**SN74LS174**	**983**
DM74LS189	Fairchild	74LS189	
	TI	**SN74LS189A**	**988**
DM74LS190	Fairchild	74LS190	
	Hitachi	HD74LS190	
	Motorola	SN74LS190	
	SGS	T74LS190	
	TI	**SN74LS190**	**989**
DM74LS191	Fairchild	74LS191	
	Hitachi	HD74LS191	
	Motorola	SN74LS191	
	SGS	T74LS191	
	Signetics	74LS191	
	TI	**SN74LS191**	**989**
DM74LS192	Fairchild	74LS192	
	Hitachi	HD74LS192	
	Motorola	SN74LS192	
	SGS	T74LS192	
	Signetics	74LS192	
	TI	**SN74LS192**	**990**
DM74LS193	Fairchild	74LS193	
	Hitachi	HD74LS193	
	Motorola	SN74LS193	
	SGS	T74LS193	
	Signetics	74LS193	
	TI	**SN74LS193**	**990**
DM74LS194	Fairchild	74LS194A	
	Hitachi	HD74LS194A	
	Motorola	SN74LS194A	
	SGS	T74LS194A	
	Signetics	74LS194A	
	TI	**SN74LS194A**	**990**
DM74LS195	Fairchild	74LS195A	
	Hitachi	HD74LS195A	
	Motorola	SN74LS195A	
	SGS	T74LS195A	
	Signetics	74LS195A	
	TI	**SN74LS195A**	**991**
DM74LS196	Fairchild	74LS196	
	Hitachi	HD74LS196	
	Motorola	SN74LS196	
	Signetics	N82S80	
	TI	**SN74LS196**	**991**
DM74LS197	Fairchild	74LS197	
	Hitachi	HD74LS197	
	Motorola	SN74LS197	
	Signetics	74LS197	
	TI	**SN74LS197**	**992**
DM74LS20	Fairchild	74LS20	
	Hitachi	HD74LS20	
	Motorola	SN74LS20	
	SGS	T74LS20	
	Signetics	74LS20	
	TI	**SN74LS20**	**926**
DM74LS21	Fairchild	74LS21	
	Hitachi	HD74LS21	
	Motorola	SN74LS21	
	SGS	T74LS21	
	Signetics	74LS21	
	TI	**SN74LS21**	**927**
DM74LS22	Fairchild	74LS22	
	Hitachi	HD74LS22	
	Motorola	SN74LS22	
	SGS	T74LS22	
	TI	**SN74LS22**	**927**
DM74LS221	Fairchild	74LS221	
	Hitachi	HD74LS221	
	Motorola	SN74LS221	
	TI	**SN74LS221**	**994**
DM74LS245	Fairchild	74LS245	
	GTEMicro	G74SC245	
	Mitel	MD74SC245	
	MMI	**SN74LS245**	**804**
	Motorola	SN74LS245	
	Plessey	MV74SC245	
	SPI	SP74SC245	
	Signetics	74LS245	
		N8T245	**876**
	TI	SN74LS245	
DM74LS247	Fairchild	74LS247	
	Hitachi	HD74LS247	

(Continued)

♠ Discontinued

Bold face device numbers indicate manufacturers data is provided in the IC Master on the pages noted.

© IC MASTER 1984

National Semiconductor (Cont'd)

Manufacturer Device	Replacement Source	Device	IC Master Page
DM74LS247	Motorola	SN74LS247	
	TI	**SN74LS247**	**1001**
DM74LS248	Fairchild	74LS248	
	Hitachi	HD74LS248	
	Motorola	SN74LS248	
	SGS	T74LS248	
	TI	**SN74LS248**	**1002**
DM74LS249	Fairchild	74LS249	
	Hitachi	HD74LS249	
	Motorola	SN74LS249	
	SGS	T74LS249	
	TI	**SN74LS249**	**1002**
DM74LS251	Fairchild	74LS251	
	Hitachi	HD74LS251	
	Motorola	SN74LS251	
	SGS	T74LS251	
	Signetics	74LS251	
	TI	**SN74LS251**	**1003**
DM74LS253	Fairchild	74LS253	
	Hitachi	HD74LS253	
	Motorola	SN74LS253	
	National	DM8214	
	SGS	T74LS253	
	Signetics	74LS253	
	TI	**SN74LS253**	**1003**
DM74LS257	Fairchild	74LS257A	
	Hitachi	HD74LS257	
	Motorola	SN74LS257A	
	SGS	T74LS257	
	Signetics	74LS257	
		74LS257A	
	TI	SN74LS257	
DM74LS258	Fairchild	74LS258A	
	Hitachi	HD74LS258	
	Motorola	SN74LS258A	
	SGS	T74LS258	
	Signetics	74LS258	
	TI	SN74LS258	
DM74LS26	Fairchild	74LS26	
	Hitachi	HD74LS26	
	Motorola	SN74LS26	
	SGS	T74LS26	
	Signetics	74LS26	
	TI	**SN74LS26**	**928**
DM74LS266	Fairchild	74LS266	
	Motorola	SN74LS266	
	Raytheon	RC8242	
	SGS	T74LS266	
	Signetics	74LS266	
		N8242	**876**
	TI	**SN74LS266**	**1007**
DM74LS27	Fairchild	74LS27	
	Hitachi	HD74LS27	
	Motorola	SN74LS27	
	SGS	T74LS27	
	Signetics	74LS27	
	TI	**SN74LS27**	**929**
DM74LS279	Fairchild	74LS279	
	Hitachi	HD74LS279	
	Motorola	SN74LS279	
	Signetics	74LS279	
	TI	**SN74LS279**	**1009**
DM74LS283	Fairchild	74LS283	
	Hitachi	HD74LS283	
		HD74LS283A	
	Motorola	SN74LS283	
	SGS	T74LS283	
	Signetics	74LS283	
	TI	**SN74LS283**	**1011**
DM74LS289	Fairchild	74LS289	
	TI	**SN74LS289A**	**1012**
DM74LS290	Fairchild	74LS290	
	Hitachi	HD74LS290	
	Motorola	SN74LS290	
	SGS	T74LS290	
	Signetics	74LS290	
	TI	**SN74LS290**	**1012**
DM74LS293	Fairchild	74LS293	
	Hitachi	HD74LS293	
	Motorola	SN74LS293	
	SGS	T74LS293	
	Signetics	74LS293	
	TI	**SN74LS293**	**1014**
DM74LS30	Fairchild	74LS30	
	Hitachi	HD74LS30	
	Motorola	SN74LS30	
	SGS	T74LS30	
	Signetics	74LS30	
	TI	**SN74LS30**	**929**
DM74LS32	Fairchild	74LS32	
	Hitachi	HD74LS32	
	Motorola	SN54LS32	
		SN74LS32	
	SGS	T74LS32	
	Signetics	74LS32	
	TI	**SN74LS32**	**930**
DM74LS352	Fairchild	74LS352	
	Motorola	SN74LS352	
	SGS	T74LS352	
	TI	**SN74LS352**	**1020**
DM74LS353	Fairchild	74LS353	
	Motorola	SN74LS353	
	SGS	T74LS353	
	TI	**SN74LS353**	**1021,1022**
DM74LS365	Fairchild	74LS365A	
	Motorola	SN74LS365A	
	SGS	T74LS365A	
	Signetics	74LS365	
		74LS365A	
	TI	**SN74LS365A**	**1023**
DM74LS366	Fairchild	74LS366A	
	Motorola	SN74LS366A	
	SGS	T74LS366A	
	Signetics	74LS366A	
	TI	**SN74LS366A**	**1023**
DM74LS367	Fairchild	74LS367A	
	Hitachi	HD74LS367	
		HD74LS367A	
	Motorola	SN74LS367A	
	SGS	T74LS367A	
	Signetics	74LS367	
		74LS367A	
	TI	**SN74LS367A**	**1024**
DM74LS368	Fairchild	74LS368A	
	Hitachi	HD74LS368	
	Motorola	SN74LS368A	
	SGS	T74LS368	
	Signetics	74LS368	
		74LS368A	
	TI	**SN74LS368A**	**1024**
DM74LS37	Fairchild	74LS37	
	Hitachi	HD74LS37	
	Motorola	SN74LS37	
	SGS	T74LS37	
	Signetics	74LS37	
	TI	**SN74LS37**	**932**
DM74LS374	Fairchild	74LS374	
	MMI	**SN74LS374**	**804**
	Motorola	SN74LS374	
	SGS	T74LS374	
	Signetics	74LS374	
	TI	**SN74LS374**	**1026**
DM74LS38	Fairchild	74LS38	
	Hitachi	HD74LS38	
	Motorola	SN74LS38	
	SGS	T74LS38	
	Signetics	74LS38	
	TI	**SN74LS38**	**932**
DM74LS386	Hitachi	HD74LS386	
	Motorola	SN74LS386	
	TI	**SN74LS386**	**1030**
DM74LS395	Fairchild	74LS395	
	Motorola	SN74LS395	
	SGS	T74LS395	
	Signetics	74LS395	
	TI	**SN74LS395A**	**1031**
DM74LS40	Fairchild	74LS40	
	Hitachi	HD74LS40	
	Motorola	SN74LS40	
	SGS	T74LS40	
	Signetics	74LS40	
	TI	**SN74LS40**	**933**
DM74LS42	Fairchild	74LS42	
	Hitachi	HD74LS42	
	Motorola	SN74LS42	
	SGS	T74LS42	
	Signetics	74LS42	
	TI	**SN74LS42**	**933**
DM74LS47	Fairchild	74LS47	
	Hitachi	HD74LS47	
	Motorola	SN74LS47	
	SGS	T74LS47	
	TI	**SN74LS47**	**935**
DM74LS48	Fairchild	74LS48	
	Hitachi	HD74LS48	
	Motorola	SN74LS48	
	SGS	T74LS48	
	Signetics	74LS48	
	TI	**SN74LS48**	**935**
DM74LS49	Fairchild	74LS49	
	Hitachi	HD74LS49	
	Motorola	SN74LS49	
	SGS	T74LS49	
	TI	**SN74LS49**	**935**
DM74LS51	Fairchild	74LS51	
	Hitachi	HD74LS51	
	Motorola	SN74LS51	
	SGS	T74LS51	
	Signetics	74LS51	
	TI	**SN74LS51**	**936**
DM74LS54	Fairchild	74LS54	
	Hitachi	HD74LS54	
	Motorola	SN74LS54	
	SGS	T74LS54	
	Signetics	74LS54	
	TI	**SN74LS54**	**938**
DM74LS55	Fairchild	74LS55	
	Hitachi	HD74LS55	
	Motorola	SN74LS55	
	SGS	T74LS55	
	TI	**SN74LS55**	**939**
DM74LS670	Fairchild	74LS670	
	Motorola	SN74LS670	
	SGS	T74LS670	
	Signetics	74LS670	
	TI	**SN74LS670**	**1080**
DM74LS73	Hitachi	HD74LS73	
	Motorola	SN74LS73A	
	Signetics	74LS73	
	TI	**SN74LS73A**	**944**
DM74LS74	Fairchild	74LS74	
	Hitachi	HD74LS74	
		HD74LS74A	
	Motorola	SN74LS74A	
	SGS	T74LS74	
	Signetics	74LS74	
	TI	**SN74LS74A**	**945,946**
DM74LS75	Hitachi	HD74LS75	
	Motorola	SN74LS75	
	Signetics	74LS75	
	TI	SN74LS75	
DM74LS76	Hitachi	HD74LS76	
	Motorola	SN74LS76A	
	Signetics	74LS76	
	TI	**SN74LS76A**	**946**
DM74LS78	Hitachi	HD74LS78	
	Motorola	SN74LS78A	
	TI	**SN74LS78A**	**947**
DM74LS797	Motorola	81LS97	
DM74LS798	Motorola	81LS98	
DM74LS83A	Fairchild	74LS83A	
	Hitachi	HD74LS183A	
		HD74LS83A	
	Motorola	SN74LS83A	
	Signetics	74LS83	
		74LS83A	
	TI	**SN74LS83A**	**949**
DM74LS85	Fairchild	74LS85	
	Hitachi	HD74LS85	
	Motorola	SN74LS85	
	Signetics	74LS85	
	TI	**SN74LS85**	**950**
DM74LS86	Fairchild	74LS86	
	Hitachi	HD74LS86	
	Motorola	SN74LS86	
	SGS	T74LS86	
	Signetics	74LS86	
	TI	**SN74LS86**	**950**
DM74LS90	Fairchild	74LS90	
	Motorola	SN74LS90	
	SGS	T74LS90	
	Signetics	74LS90	
	TI	**SN74LS90**	**952**
DM74LS92	Fairchild	74LS92	
	Hitachi	HD74LS92	
	Motorola	SN74LS92	
	SGS	T74LS92	
	Signetics	74LS92	
	TI	**SN74LS92**	**952**
DM74LS93	Fairchild	74LS93	
	Hitachi	HD74LS93	
	Motorola	SN74LS93	
	SGS	T74LS93	
	Signetics	74LS93	
	TI	**SN74LS93**	**953**
DM74LS95B	Fairchild	74LS95B	
	Hitachi	HD74LS95B	
	Motorola	SN74LS95B	
	SGS	T74LS95B	
		(Continued)	
DM74LS95B	Signetics	74LS95B	
	TI	**SN74LS95B**	**954**
DM74S00	Fairchild	74S00	
	Hitachi	HD74S00	
	Signetics	74S00	
	TI	**SN74S00**	**920**
DM74S02	Fairchild	74S02	
	Hitachi	HD74S02	
	Signetics	74S02	
	TI	**SN74S02**	**920**
		SN74S32	**930**
DM74S03	Fairchild	74S03	
	Hitachi	HD74S03	
	Signetics	74S03	
	TI	**SN74S03**	**921**
DM74S04	Fairchild	74S04	
	Hitachi	HD74S04	
	Signetics	74S04	
	TI	**SN74S04**	**921**
DM74S05	Fairchild	74S05	
	Hitachi	HD74S05	
	Signetics	74S05	
	TI	**SN74S05**	**921**
DM74S10	Fairchild	74S10	
	Hitachi	HD74S10	
	Signetics	74S10	
	TI	**SN74S10**	**923**
DM74S11	Fairchild	74S11	
	Hitachi	HD74S11	
	Signetics	74S11	
	TI	**SN74S11**	**923**
DM74S112	Fairchild	74S112	
	Hitachi	HD74S112	
	Motorola	SN74S112	
	Signetics	74S112	
	TI	**SN74S112**	**959**
DM74S113	Fairchild	74S113	
	Hitachi	HD74S113	
	Signetics	74S113	
	TI	**SN74S113**	**959**
DM74S114	Hitachi	HD74S114	
	TI	**SN74S114**	**960**
DM74S133	Fairchild	74S133	
	Hitachi	HD74S133	
	Signetics	74S133	
	TI	**SN74S133**	**965**
DM74S134	Hitachi	HD74S134	
	Signetics	74S134	
	TI	**SN74S134**	**965**
DM74S135	Fairchild	74S135	
	Hitachi	HD74S135	
	Signetics	74S135	
	TI	**SN74S135**	**966**
DM74S138	AMD	SN74S138	
	Fairchild	74S138	
	Signetics	74S138	
	TI	**SN74S138**	**968**
DM74S139	AMD	SN74S139	
	Fairchild	74S139	
	Signetics	74S139	
	TI	**SN74S139**	**968**
DM74S140	Fairchild	74S140	
	Hitachi	HD74S140	
	Signetics	74S140	
	TI	**SN74S140**	**969**
DM74S15	Fairchild	74S15	
	Hitachi	HD74S15	
	TI	**SN74S15**	**925**
DM74S151	AMD	SN74S151	
	Fairchild	74S151	
	Hitachi	HD74S151	
	Signetics	74S151	
	TI	**SN74S151**	**972**
DM74S153	AMD	SN74S153	
	Fairchild	74S153	
	Hitachi	HD74S153	
	Signetics	74S153	
	TI	**SN74S153**	**972**
DM74S157	AMD	SN74S157	
	Fairchild	74S157	
	Hitachi	HD74S157	
	Signetics	74S157	
	TI	**SN74S157**	**975**
DM74S158	AMD	SN74S158	
	Fairchild	74S158	
	Hitachi	HD74S158	
	Signetics	74S158	
	TI	**SN74S158**	**975**
DM74S174	AMD	SN74S174	
	Fairchild	74S174	
	Hitachi	HD74S174	
		(Continued)	

◆ Discontinued

The manufacturers report their devices can be used as direct replacements.
Performance details often differ, so compare the specifications considering your requirements.

National Semiconductor (Cont'd)

Manufacturer Device	Replacement Source	Device	IC Master Page
DM74S174	Signetics	74S174	
	TI	**SN74S174**	**983**
DM74S175	AMD	SN74S175	
	Fairchild	74S175	
	Hitachi	HD74S175	
	Signetics	74S175	
	TI	SN74S175	
DM74S182	Fairchild	74S182	
	Hitachi	HD74S182	
	MMI	**SN74S182**	**819**
	Signetics	74S182	
	TI	**SN74S182**	**986**
DM74S188	AMD	AM27S18	
	Harris	HM7602	
	MMI	6330-1	
		63S080	**4026**
	National	DM7588	
		DM8577	
	Signetics	N82S23	
	TI	TBP18SA030	
		TBPSA030M	
DM74S189	AMD	AM27LS03	
		AM27S03	
		SN74S189	
	Fairchild	74S189	
		93405	
	Hitachi	HD74S189	
	National	DM7599	
		DM8599	
	Signetics	74S189	
	TI	SN74S189	
DM74S195	AMD	SN74S195	
	Fairchild	74S195	
		93S00C	
	Signetics	74S195	
	TI	**SN74S195**	**991**
DM74S20	Fairchild	74S20	
	Hitachi	HD74S20	
	Signetics	74S20	
	TI	**SN74S20**	**926**
DM74S200	AMD	AM27LS00	
	Fairchild	93421	
		93L420	
		93L421	
	Intel	3106	
	Motorola	MC4256	
	National	93L420	
		93L421	
	NEC	μPB2200	
	Signetics	74200	
		N82S116	
		N82S16	
	TI	SN74LS200	
		SN74S200	
		SN74S201	**993**
DM74S206	AMD	AM27LS01	
		AM29720	
	Fairchild	93411	
		93L411	
	Intel	3107	
	National	N82S117	
		N82S17	
	Signetics	74S301	
		N82S17	
	TI	SN74206	
		SN74S301	**1016**
DM74S22	Fairchild	74S22	
	Hitachi	HD74S22	
	TI	**SN74S22**	**927**
DM74S251	AMD	SN74S251	
	Hitachi	HD74S251	
	Signetics	74S251	
	TI	**SN74S251**	**1003**
DM74S253	AMD	SN74S253	
	Fairchild	74S253	
	Signetics	74S253	
DM74S257	AMD	SN74S257	
	Fairchild	74S257	
	Hitachi	HD74S257	
	National	DM7123	
		DM8123	
	Signetics	74S257	
	~~TI~~	~~SN74S257~~	~~1004~~
DM74S280	Hitachi	HD74S280	
	Signetics	74S280	
	TI	**SN74S280**	**1009**
DM74S281	**TI**	**SN74S281**	**1010**
DM74S287	AMD	AM27S11	
		AM27S21	
		(Continued)	

Manufacturer Device	Replacement Source	Device	IC Master Page
DM74S287	Harris	HM7611	
	Intersil	IM5623	
	MMI	6301-1	
		63S141	**4026**
	Signetics	N82S129	
	TI	**TBP24S10**	**542,4238**
DM74S288	AMD	AM27LS19	
		AM27S19	
	Harris	HM7603	
	MMI	5331-1	
		53S081	**4026**
		6331-1	
		63S081	**4026**
	National	DM8578	
	Signetics	N82S123	
		S82S123	**532**
	TI	**TBP18S030**	**542,4237**
DM74S289	Fairchild	7489	
	Hitachi	HD7489	
		HD74S289	
	National	DM7489	
		DM8589	
		MM74S289	
	Signetics	74S289	
		N82S25	
	TI	SN74S289	
DM74S30	Fairchild	74S30	
	TI	**SN74S30**	**929**
DM74S387	AMD	AM27S20	
	Fairchild	93417	
	Harris	HM7610	
	MMI	6300-1	
		63S140	**4026**
	Signetics	N82S126	
	TI	**TBP24SA10**	**542,4238**
DM74S40	Fairchild	74S40	
	Hitachi	HD74S40	
	Signetics	74S40	
	TI	**SN74S40**	**933**
DM74S472	AMD	AM27S29	
	Fujitsu	MB7124	
	Harris	HM7649	
	MMI	6349-1	
	Motorola	**MCM7649**	**4047**
	Raytheon	**29621**	**4131**
	Signetics	N82S147	
	TI	**TBP28S42**	**542,4244**
		TBP28S42M	**542,4244**
DM74S473	AMD	AM27S28	
	Fujitsu	MB7123	
	MMI	6348-1	
	Signetics	N82S146	
	TI	**TBP28SA42**	**4245**
DM74S474	AMD	AM27S31	
	Fairchild	93448	
	Fujitsu	MB7126	
	Harris	HM7641	
	MMI	6341-1	
	Motorola	**MCM7641**	**4047**
	Signetics	N82S141	
	TI	**TBP28S46**	**542,543,4245**
DM74S475	AMD	AM27S30	
	Fairchild	93438	
	Harris	HM7640	
	MMI	6340-1	
	National	DM77S475	
		DM87S475	
	Signetics	N82S140	
	TI	**TBP28SA46**	**4245**
DM74S51	Fairchild	74S51	
	Hitachi	HD74S51	
	Signetics	74S51	
	TI	**SN74S51**	**936**
DM74S570	AMD	AM27S12	
	Fairchild	93436	
	Harris	HM7620	
	MMI	6305-1	
		63S240	**4026**
	Signetics	N82S130	
DM74S571	AMD	AM27S13	
	Fairchild	93446	
	Harris	HM7621	
	Intel	3622	
	MMI	6306-1	
		63S241	**4026**
	Motorola	**MCM7621**	**4047**
		(Continued)	

Manufacturer Device	Replacement Source	Device	IC Master Page
DM74S571	**Raytheon**	**29611**	**4131**
	Signetics	N82S131	
	TI	SN74S571	
DM74S572	AMD	AM27S32	
	Fairchild	93452	
	Fujitsu	MB7121	
	Harris	HM7642	
	Hitachi	HN25044	
	MMI	6352-1	
	Motorola	MCM7642	
	NEC	μPB406	
	Signetics	N82S136	
	TI	**TBP24SA41**	**4239**
DM74S573	AMD	AM27S33	
	Fairchild	93453C	
	Fujitsu	MB7122	
	Harris	HM7643	
		HM7643A	
	MMI	5353-1	
		6353-1	
	Motorola	**MCM7643**	**4047**
	Signetics	N72HS137	
		N82S137	**4172**
		S82S195	**4182**
	TI	**TBP24S41**	**542,4239**
DM74S65	Fairchild	74S65	
	Hitachi	HD74S65	
	TI	SN74S65	
DM74S74	Fairchild	74S74	
	Hitachi	HD74S74	
	Signetics	74S74	
	TI	SN74S74	
DM74S86	Fairchild	74S86	
	Hitachi	HD74S86	
	Signetics	74S86	
	TI	**SN74S86**	**950**
DM7551	Fairchild	54173	
	National	DM54173	
	Raytheon	RM8T10	
	TI	**SN54173**	**982**
DM7560	Fairchild	54192	
	National	DM54192	
	TI	**SN54192**	**990**
DM7563	Fairchild	54193	
	National	DM54193	
	TI	**SN54193**	**990**
DM7570	Fairchild	54164	
	National	DM54164	
	Signetics	**54164**	**528,861**
	TI	**SN54164**	**979**
DM7577	AMD	AM27LS18	
	MMI	5330-1	
		53LS080	
		63LS080	
	National	**DM54S188**	**4057**
	Signetics	**S82S23**	**532**
DM7578	**National**	**DM54S288**	**4057**
	TI	**TBP18S030M**	**542,4237**
DM7588	AMD	AM27S18	
	Harris	HM7602	
	MMI	6330-1	
		63S080	**4026**
	National	**DM74S188**	**4057**
		DM8577	
	Signetics	N82S23	
	TI	TBP18SA030	
		TBPSA030M	
DM7589	AMD	31L01	
		AM27LS02	
		AM27S02	
		AM3101	
		AM3101A	
		SN7489-1	
	Fairchild	74S289	
	Intel	3101	
	Motorola	MC4064	
	NEC	μPB2089	
		μPB2289	
	Signetics	3101	
		3101A	
		7489	
		N8225	
		S3101	
	TI	**SN7489**	**951**
DM7590	Fairchild	54165	
	National	DM54165	
	Signetics	**54165**	**861**
	TI	**SN54165**	**979**
DM7599	AMD	AM27LS03	
		AM27S03	
		(Continued)	

Manufacturer Device	Replacement Source	Device	IC Master Page
DM7599	AMD	SN74S189	
	Fairchild	74S189	
		93405	
	Hitachi	HD74S189	
	National	DM74S189	
		DM8599	
	Signetics	74S189	
	TI	SN74S189	
DM76L70	National	DM54L164	
	TI	SN54L164	
DM77S180	Fujitsu	MB7131E-W	
	MMI	5380-1	
	Signetics	S82S180	
	TI	**TBP28SA86M**	**4247**
DM77S181	**AMD**	**AM27S181M**	**3905**
	Fairchild	93451M	
	Fujitsu	MB7132-W	
		MB7132E-W	
	Harris	**HM7681-2**	**3949**
	MMI	5381-1	
	Raytheon	29631AM	
	Signetics	S82HS181	
		S82S181	**532**
	TI	TBP28S86M	
DM77S184	Fujitsu	MB7127E-W	
	MMI	5388	
		5388-1	
DM77S185	Fujitsu	MB7128E-W	
	Harris	**HM7685-2**	**3950**
	MMI	5389	
		5389-1	
	Raytheon	29651AM	
	Signetics	S82HS185	
		S82S185	**532**
	TI	SN54S454	
		TBP24S81M	**542,4239**
DM77S190	Signetics	S82S190	
DM77S191	**MMI**	**53S1681**	**4026**
	Signetics	**S82S191**	**532**
DM77S295	Intel	M3604	
	MMI	5340-1	
	National	**DM54S475**	**4057**
		DM87S295	
	Signetics	S82S140	
DM77S321	Fujitsu	MB7142E-W	
	Signetics	**S82S321**	**532**
DM77S401	MMI	57401	
DM77S475	AMD	AM27S30	
	Fairchild	93438	
	Harris	HM7640	
	MMI	6340-1	
	National	**DM74S475**	**4057**
		DM87S475	
	Signetics	N82S140	
	TI	**TBP28SA46**	**4245**
DM7800	TI	SN55180	
DM7875A	**TI**	**SN54284**	**1011**
DM7875B	**TI**	**SN54285**	**1011**
DM8093	Fairchild	74125	
	Hitachi	HD74125	
	National	DM74125	
	Signetics	**74125**	**861**
	TI	**SN74125**	**963**
		SN74425	**1034**
DM8094	Fairchild	74126	
	Hitachi	HD74126	
	National	DM74126	
	Signetics	**74126**	**861**
	TI	**SN74126**	**963**
		SN74426	**1034**
DM8095	Motorola	MC6885	
		MC8T95	
	Signetics	**N8T95**	**876**
	TI	SN74365	
DM8096	Motorola	MC6886	
		MC8T96	
	Signetics	**N8T96**	**876**
	TI	SN74366	
DM8097	Motorola	MC6887	
		MC8T97	
	Signetics	**N8T97**	**876**
	TI	SN74367	
DM8098	Motorola	MC6888	
		MC8T98	
	National	DS8674	
	~~Signetics~~	~~N8T98~~	~~876~~
	TI	SN74368	
DM8121	National	DM74251	
	TI	**SN74251**	**1003**
DM8123	AMD	SN74S257	
	Fairchild	74S257	
		(Continued)	

◆ Discontinued

Bold face device numbers indicate manufacturers data is provided in the IC Master on the pages noted.

ALTERNATE SOURCE DIRECTORY

© IC MASTER 1984

National Semiconductor (Cont'd)

Manufacturer Device	Replacement Source	Device	IC Master Page
DM8123	Hitachi	HD74S257	
	National	DM7123	
		DM74S257	
	Signetics	74S257	
	TI	**SN74S257**	**1004**
DM8160	Fairchild	93S46	
		93S47	
	National	DM7160	
DM8214	Fairchild	74LS253	
	Hitachi	HD74LS253	
	Motorola	SN74LS253	
	National	DM74LS253	
	SGS	T74LS253	
	Signetics	74LS253	
	TI	**SN74LS253**	**1003**
DM8280	Fairchild	74176	
		96176	
	National	DM74176	
	Raytheon	RC8280	
	Signetics	74176	
		N8280	
	TI	**SN74176**	**984**
DM8281	Fairchild	74177	
	National	DM74177	
	Raytheon	RC8281	
	Signetics	74177	
		N8281	
	TI	**SN74177**	**984**
DM8290	Fairchild	74196	
	National	DM74196	
	Raytheon	RC8290	
	Signetics	74196	
	TI	**SN74196**	**991**
DM8291	Fairchild	74197	
	National	DM74197	
	Raytheon	RC8291	
	Signetics	74197	
	TI	**SN74197**	**992**
DM8301	Fairchild	9031	
		9301	
	National	DM9301	
	Raytheon	RC8252	
		RM8252	
	Signetics	N8252	
		S8252	
	TI	SN29301	
		SN39301	
DM8309	Fairchild	9309	
	National	DM9309	
	TI	SN29309	
		SN39309	
DM8311	Fairchild	9311	
	Hitachi	HD74154	
	National	DM7213	
		DM74154	
	Raytheon	RC9311	
	Signetics	**74154**	**861**
	TI	SN29311	
	TI	**SN74154**	**973**
DM8312	Fairchild	9312	
	Raytheon	RC8230	
		RC9312	
	Signetics	N8230	
	TI	SN29312	
DM8318	Fairchild	9318	
	Hitachi	HD74148	
	National	DM74148	
	Signetics	**74148**	**861**
		N82148	
	TI	**SN74148**	**971**
DM8322	Raytheon	RC9322	
	TI	SN29322	
DM8334	Fairchild	9334	
	TI	SN29334	
	TI	**SN74259**	**1005**
DM8551	Fairchild	74173	
	National	DM74173	
	Raytheon	RC8T10	
	Signetics	**N8T10**	**876**
	TI	**SN74173**	**982**
DM8560	Fairchild	74192	
		9360	
	National	DM74192	
	Raytheon	RC9360	
	Signetics	**74192**	**861**
	TI	**SN74192**	**990**
DM8563	Fairchild	74193	
	National	DM74193	
	Signetics	**74193**	**861**

(Continued)

Manufacturer Device	Replacement Source	Device	IC Master Page
DM8563	TI	SN74129	
		SN74193	**990**
DM8570	AMD	SN74164	
	Fairchild	74164	
	Hitachi	HD74164	
	National	DM74164	
		DM8579	
	Signetics	**74164**	**861**
	TI	**SN74164**	**979**
DM8577	AMD	AM27S18	
	Harris	HM7602	
	MMI	6330-1	
		63S080	**4026**
	National	**DM74S188**	**4057**
		DM7588	
	Signetics	N82S23	
	TI	TBP18SA030	
		TBPSA030M	
DM8578	AMD	AM27LS19	
		AM27S19	
	Harris	HM7603	
	MMI	5331-1	
		53S081	**4026**
		6331-1	
		63S081	**4026**
	National	**DM74S288**	**4057**
	Signetics	N82S123	
		S82S123	**532**
	TI	**TBP18S030**	**542,4237**
DM8579	AMD	SN74164	
	Fairchild	74164	
	Hitachi	HD74164	
	National	DM74164	
		DM8570	
	Signetics	**74164**	**861**
	TI	**SN74164**	**979**
DM8589	Fairchild	7489	
	Hitachi	HD7489	
		HD74S289	
	National	DM7489	
		DM74S289	
		MM74S289	
	Signetics	74S289	
		N82S25	
	TI	SN74S289	
DM8590	Fairchild	74165	
	National	DM74165	
	Signetics	**74165**	**861**
	TI	**SN74165**	**979**
DM8599	AMD	AM27LS03	
		AM27S03	
		SN74S189	
	Fairchild	74S189	
		93405	
	Hitachi	HD74S189	
	National	DM74S189	
		DM7599	
	Signetics	74S189	
	TI	SN74S189	
DM85L60	National	DM74L192	
DM85L63	National	DM74L193	
DM8601	Fairchild	74122	
		9601	
	National	DM9601	
	Raytheon	RF8601	
		RF9601	
	Signetics	**N8T22**	**876**
		S8T22	
	TI	**SN74122**	**961**
DM8602	Fairchild	9602	
	National	DM9602	
	Raytheon	RF8602	
		RF9602	
	TI	SN39602	
DM86L70	National	DM74L164	
DM87S180	AMD	AM27S180	
		AM27S280	
	Fairchild	93450	
		93Z450	
	Fujitsu	MB7131	
	Hitachi	HN25088	
	Intel	3608	
	MMI	6380-1	
	National	DM87S229	
	NEC	μPB408	
	Signetics	N82S180	
	TI	TBP28SA86	
DM87S181	AMD	AM27PS181	
		AM27S181	
		AM27S281	
	Fairchild	93Z451	

(Continued)

Manufacturer Device	Replacement Source	Device	IC Master Page
DM87S181	Fairchild	F93451	
	Fujitsu	MB7132	
	Harris	HM7681	
	Hitachi	HN25089	
	Intel	3628	
		3628A	
		3628B	
	MMI	6381-1	
	Motorola	**MCM7681**	**4047**
	National	DM87S228	
	NEC	μPB417	
	Raytheon	29631	
		29631A	**4131**
		29633	
	Signetics	825181	
		N82HS181	
		N82S181	
	Supertex	SM82S181	
	TI	TBP28S86	
DM87S184	AMD	AM27S184	
	Fujitsu	MB7127	
	Harris	HM7684	
	Hitachi	HM25045	
	MMI	6388	
		6388-1	
	Signetics	N82S184	
	TI	**TBP24SA81**	**4240**
DM87S185	AMD	AM27S185	
	Fujitsu	MB7128	
	Harris	HM7685	
	Hitachi	HN25085	
	MMI	6389	
		6389-1	
		63S841	**4026**
	Motorola	**MCM7685**	**4047**
	Raytheon	29651	
		29651A	**4131**
	Signetics	N82HS185	
		N82S185	
	TI	**TBP24S81**	**542,4239**
DM87S186	Harris	HM7686	
DM87S190	AMD	AM27S190	
	Fairchild	93510	
		93Z510	
	Fujitsu	MB7137	
		MB7137E-W	
	Harris	HM76160	
	Hitachi	HN25168	
	MMI	**63S1681**	**4026**
	Motorola	MCM6160	
	NEC	μPB409	
	Raytheon	**29683**	**4131**
	Signetics	N82S190	
	TI	TBP28SA166	
DM87S191	AMD	AM27PS191	
		AM27S191	
	Fairchild	93511	
		93Z511	
	Fujitsu	MB7138	
		MB7138E-W	
	Harris	HM76161	
	Hitachi	HN25169	
	MMI	**63S1681**	**4026**
	Motorola	**MCM76161**	**4047**
	NEC	μPB429	
	Raytheon	**29681**	**4131**
		29681A	**4131**
	Signetics	N82S191	
	TI	**TBP28S166**	**4247**
DM87S228	AMD	AM27PS181	
		AM27S181	
		AM27S281	
	Fairchild	93Z451	
		F93451	
	Fujitsu	MB7132	
	Harris	HM7681	
	Hitachi	HN25089	
	Intel	3628	
		3628A	
		3628B	
	MMI	6381-1	
	Motorola	**MCM7681**	**4047**
	National	**DM87S181**	**4057**
	NEC	μPB417	
	Raytheon	29631	
		29631A	**4131**
		29633	
	Signetics	825181	
		N82HS181	
		N82S181	

(Continued)

Manufacturer Device	Replacement Source	Device	IC Master Page
DM87S228	Supertex	SM82S181	
	TI	TBP28S86	
DM87S229	AMD	AM27S180	
		AM27S280	
	Fairchild	93450	
		93Z450	
	Fujitsu	MB7131	
	Hitachi	HN25088	
	Intel	3608	
	MMI	6380-1	
	National	**DM87S180**	**4057**
	NEC	μPB408	
	Signetics	N82S180	
	TI	TBP28SA86	
DM87S295	Intel	M3604	
	MMI	5340-1	
	National	**DM54S475**	**4057**
		DM77S295	
	Signetics	S82S140	
DM87S321	**AMD**	**AM27S43**	**3908**
	Fujitsu	MB7142	
	Harris	76321	
		HM76321	
	Intel	3632	
	MMI	**53S3281**	**4026**
		63S3281	**4026**
	National	87S321	
	Raytheon	**29671**	**4131**
	Signetics	N82S321	
DM87S475	AMD	AM27S30	
	Fairchild	93438	
	Harris	HM7640	
	MMI	6340-1	
	National	**DM74S475**	**4057**
		DM77S475	
	Signetics	N82S140	
	TI	**TBP28SA46**	**4245**
DM87SR81	AMD	AM27S35	
		AM27S37	**3901**
	Synertek	**SY3308**	**4211**
DM8810	Fairchild	7426	
	Hitachi	HD7426	
	National	DM7426	
	Signetics	**7426**	**860**
	TI	**SN7426**	**928**
DM8842	Fairchild	7442	
	Hitachi	HD7442	
	National	DM7442	
	Signetics	**7442**	**860**
	TI	SN7442	
		SN7442A	**933**
DM8848	Fairchild	7448	
	National	DM7448	
	Signetics	N8T54	
	TI	**SN7448**	**935**
		SN7448A	
DM8875A	**TI**	**SN74284**	**1011**
DM8875B	**TI**	**SN74285**	**1011**
DM9004C	Fairchild	7420	
		9004	
	Hitachi	HD7420	
	National	DM7420	
	Signetics	**7420**	**860**
	TI	**SN7420**	**926**
	Toshiba	TC7420	
DM9016C	Fairchild	5404	
		9016	
	National	DM5404	
	TI	**SN5404**	**921**
DM9093	Fairchild	9093	
	Motorola	MC853	
		MC953	
	Raytheon	RM993	
	TI	SN158093	
		SN159093	
DM9094	Fairchild	9094	
	Motorola	MC856	
		MC956	
	Raytheon	RM9094	
		RM994	
	TI	SN158094	
		SN159094	
DM9097	Fairchild	9097	
	Motorola	MC855	
		MC955	
	Raytheon	RM997	
	TI	SN158097	
		SN159097	
DM930	Fairchild	930	
		9930	
	Motorola	MC830	

(Continued)

◆ Discontinued

The manufacturers report their devices can be used as direct replacements.
Performance details often differ, so compare the specifications considering your requirements.

National Semiconductor (Cont'd)

Manufacturer Device	Replacement Source	Device	IC Master Page
DM930	Motorola	MC930	
	Raytheon	RM930	
DM9301	Fairchild	9031	
		9301	
	National	DM8301	
	Raytheon	RC8252	
		RM8252	
	Signetics	N8252	
		S8252	
	TI	SN29301	
		SN39301	
DM9309	Fairchild	9309	
	National	DM8309	
	TI	SN29309	
		SN39309	
DM9311	National	DM54154	
	Raytheon	RM9311	
	Signetics	**54154**	**528,861**
	TI	SN39311	
		SN54154	**973**
DM9312	Raytheon	RM8230	
		RM9312	
	TI	SN39312	
DM9316	Raytheon	RM9316	
	TI	SN39316	
DM9318	National	DM54148	
	~~Signetics~~	~~54148~~	~~861~~
	TI	**SN54148**	**971**
DM932	Fairchild	932	
		9932	
	Motorola	MC932	
	Raytheon	RM932	
DM9322	Raytheon	RM9322	
	TI	SN39322	
DM933	Fairchild	933	
		9933	
	Motorola	MC933	
DM9334	TI	SN39334	
		SN54259	**1005**
DM935	Fairchild	9135	
		9935	
	Motorola	MC835	
		MC935	
DM936	Fairchild	936	
		9936	
	Motorola	MC936	
DM937	Fairchild	937	
		9937	
	Motorola	MC837	
		MC937	
DM939	Fairchild	939	
	Raytheon	RM939	
DM944	Fairchild	944	
		9944	
	Motorola	MC944	
DM945	Fairchild	945	
		9945	
	Motorola	MC945	
DM946	Fairchild	946	
		9946	
	Motorola	MC946	
DM948	Fairchild	948	
		9948	
	Motorola	MC948	
DM949	Fairchild	949	
	Motorola	MC949	
	Raytheon	RM949	
DM9567	Fairchild	9157	
	Motorola	MC857	
		MC957	
	National	DM957	
	Raytheon	RM957	
DM957	Fairchild	9157	
	Motorola	MC857	
		MC957	
	National	DM9567	
	Raytheon	RM957	
DM958	Fairchild	9158	
	Motorola	MC858	
		MC958	
	Raytheon	RM958	
DM9601	Fairchild	74122	
		9601	
	National	DM8601	
	Raytheon	RF8601	
		RF9601	
	Signetics	**N8T22**	**876**
		S8T22	
	TI	**SN74122**	**961**
DM9602	Fairchild	9602	
	National	DM8602	
	Raytheon	RF8602	
		RF9602	
	TI	SN39602	
DM961	Fairchild	961	
		9961	
	Motorola	MC961	
DM962	Fairchild	962	
		9962	
	Motorola	MC962	
DM963	Fairchild	963	
		9963	
	Motorola	MC963	
	Raytheon	RM963	
DMPAL10H8	MMI	PAL10H8	
DMPAL10L8	MMI	PAL10L8	
DMPAL12H10	MMI	PAL12H10	
DMPAL12H6	MMI	PAL12H6	
DMPAL12L10	**AMD**	**AMPAL22V10**	**4600**
	MMI	PAL12L10	
DMPAL12L6	MMI	PAL12L6	
DMPAL14H4	MMI	PAL14H4	
DMPAL14H8	MMI	PAL14H8	
DMPAL14L4	MMI	PAL14L4	
DMPAL14L8	**AMD**	**AMPAL22V10**	**4600**
	MMI	PAL14L8	
DMPAL16A4	MMI	PAL16A4	
DMPAL16C1	MMI	PAL16C1	
DMPAL16H2	MMI	PAL16H2	
DMPAL16H6	MMI	PAL16H6	
DMPAL16L2	MMI	PAL16L2	
DMPAL16X4	MMI	PAL16X4	
DMPAL18H4	MMI	PAL18H4	
DMPAL18L4	MMI	PAL18L14	
DMPAL20C1	**AMD**	**AMPAL22V10**	**4600**
	MMI	PAL20C1	
DMPAL20H2	MMI	PAL20H2	
DMPAL20L10	MMI	PAL20L10	
DMPAL20L2	**AMD**	**AMPAL22V10**	**4600**
	MMI	PAL20L2	
DMPAL20X10	**AMD**	**AMPAL22V10**	**4600**
	MMI	PAL20X10	
DMPAL20X4	**AMD**	**AMPAL22V10**	**4600**
	MMI	PAL20X4	
DMPAL20X8	**AMD**	**AMPAL22V10**	**4600**
	MMI	PAL20X8	
DMPAL26L6	**AMD**	**AMPAL22V10**	**4600**
	MMI	PAL26L6	
DP4201	Intel	4201	
DP8080A	AMD	9080	
		9080A	
		AM9080	
	Intel	8080A	
	National	INS8080A	
	NEC	μPD8080	
	TI	TMS8080	
		TMS8080A	
DP8212	AMD	8212	
		AM3212	
	National	INS8212	
	NEC	μPB8212	
	TI	**SN74S412**	**1033**
DP8216	Intel	8216	
	National	INS8216	
	NEC	μPB8216	
DP8224	AMD	8224	
	Intel	8224	
	National	INS8224	
	NEC	μPB8224	
DP8226	Intel	8226	
	National	INS8226	
	NEC	μPB8226	
DP8228	AMD	8228	
	Intel	8228	
	National	INS8228	
	NEC	μPB8228	
	TI	**SN74S428**	**1034**
		TIM8228	
DP8238	AMD	8238	
	Intel	8238	
	National	INS8238	
	NEC	μPB8238	
	TI	**SN74S438**	**1034**
		TIM8238	
DP8251	AMD	8251	
		AM9551	**1436**
	Intel	8251A	
	National	INS8251	
	NEC	μPB8251	
	SMC	COM8251A	
	Western	TR1983	
DP8303	AMD	DP8303	
DP8304	AMD	8304	
		DP8304	
	Fujitsu	MBL8286	
	Intel	8286	
		8304	
	NEC	μPB8286	
DP8307	AMD	DP8307	
DP8408	MMI	74S408	
DP8409	MMI	74S409	
DS0025	National	MH0025	
DS0026	AMD	MMH0026	
	Intersil	**ICL7667**	**3013**
	National	MH0026	
DS0056	National	MH0056	
DS1488	AMD	MC1488	
	Exar	**XR1488**	**3384**
	Fairchild	μA1488	
	Hitachi	HD75188	
	Motorola	**MC1488**	**3064**
	Raytheon	RM1488	
	Signetics	MC1488	
	SiliconG	SG1488	
	TI	MC1488	
		SN75188	
DS1489	AMD	MC1489	
	Exar	XR1489	
	Fairchild	μA1489	
	Hitachi	HD75189	
	Motorola	**MC1489**	**3064**
	Signetics	MC1489	
	SiliconG	SG1489	
	TI	SN75189	
		SN85189	
DS1489A	**Exar**	**XR1489A**	**3384**
	Fairchild	μA1489A	
	Motorola	**MC1489A**	**3064**
	Signetics	MC1489A	
	SiliconG	SG1489A	
	TI	MC1489A	
		SN75189A	
DS1603	National	LM163	
DS1611	National	LM1611	
DS1612	National	LM1612	
DS1613	National	LM1613	
DS1614	National	LM1614	
DS26LS31	AMD	AM26LS31	
	Motorola	**AM26LS31**	**3064**
	TI	AM26LS31	
DS26LS32	AMD	AM28LS32	
	TI	AM26LS32	
DS26S10	AMD	AM26S10	
	Fairchild	9640	
	Motorola	DC26S10	
	TI	AM26S10	
DS26S11	AMD	AM26S11	
	TI	AM26S11	
DS3245	Intel	3245	
	Motorola	MC3245	
DS3486	**Motorola**	**MC3486**	**3064**
	TI	MC3486	
DS3487	**Motorola**	**MC3487**	**3064**
	National	DS3687	
	TI	MC3487	
DS3611	National	LM3611	
	Sprague	UDN-3611	
	TI	SN75471	
DS3612	National	DS3632	
		LM3612	
	Sprague	UDN-3612	
	TI	SN75472	
DS3613	National	LM3613	
	Sprague	UDN-3613	
	TI	SN75473	
DS3614	National	LM3614	
	Sprague	UDN-3614	
	TI	SN75474	
DS36147	Motorola	DS36147	
DS36177	Motorola	DS36177	
DS3625	Signetics	N8T25	
DS3632	National	DS3612	
		LM3612	
	Sprague	UDN-3612	
	TI	SN75472	
DS3650	Motorola	MC3450	
DS3651	Motorola	MC3430	
		MC3441	
DS3652	Motorola	MC3452	
DS3653	Motorola	MC3432	
DS3674	Motorola	MC3460	
DS3687	**Motorola**	**MC3487**	**3064**
	National	DS3487	
	TI	MC3487	
DS55107	Fairchild	55107	
	Motorola	MC55107	
	National	LM55107A	
	TI	SN55107	
		SN55107B	
DS55108	Fairchild	55108	
	Motorola	MC55108	
	National	LM55108A	
	TI	SN55108	
		SN55108B	
DS55121	**Signetics**	**S8T13**	**876**
	TI	SN55121	
DS55122	TI	SN55122	
DS55325	Fairchild	MC55325	
	Motorola	MC55325	
	National	LM55325	
	Signetics	55325	
	SiliconG	SG55325	
	TI	SN55325	
DS55361	TI	SN55361	
DS55365	TI	SN55365	
DS55451	Fairchild	55451	
	Signetics	55451	
	SiliconG	SG55451	
	TI	SN55451	
DS55452	Fairchild	55452	
	Signetics	55452	
	SiliconG	SG55452	
	TI	SN55452	
DS55453	Fairchild	55453	
	National	LM55453	
	Signetics	55453	
	SiliconG	SG55453	
	TI	SN55453	
DS55454	Signetics	55454	
	SiliconG	SG55454	
	TI	SN55454	
DS55460	SiliconG	SG55460	
	TI	SN55460	
DS55461	SiliconG	SG55461	
	TI	SN55461	
DS55462	SiliconG	SG55462	
	TI	SN55462	
DS55463	SiliconG	SG55463	
	TI	SN55463	
DS55464	SiliconG	SG55464	
	TI	SN55464	
DS55493	TI	SN55493	
DS55494	TI	SN55494	
DS75107	Fairchild	75107	
	Motorola	MC75107	
	National	LM75107A	
	TI	SN75107	
		SN75107B	
DS75108	Fairchild	75108	
	Motorola	MC75108	
	National	LM75108A	
	TI	SN75108	
		SN75108B	
DS75121	Motorola	MC8T13	
	National	LM75121	
	Signetics	**N8T13**	**876**
	TI	N8T13	
		SN75121	
DS75122	Motorola	MC8T14	
	National	LM75122	
	Signetics	N8T14	
	TI	N8T14	
		SN75122	
DS75123	Motorola	MC8T23	
	National	LM75123	
	Signetics	**N8T23**	**876**
	TI	N8T23	
		SN75123	
DS75124	Motorola	MC8T24	
	National	LM75124	
	Signetics	**N8T24**	**876**
	TI	N8T24	
		SN75124	
DS75125	**Motorola**	**MC75125**	**3064**
	TI	SN75125	
DS75127	Motorola	MC75127	
	TI	SN75127	
DS75128	Motorola	MC75128	
	TI	SN75128	
DS75129	Motorola	MC75129	
	TI	SN75129	
DS75150	Fairchild	75150	
	TI	SN75150	

◆ Discontinued

Bold face device numbers indicate manufacturers data is provided in the IC Master on the pages noted.

© IC MASTER 1984

National Semiconductor (Cont'd)

Manufacturer Device	Replacement Source	Device	IC Master Page
DS75154	Fairchild	75154	
	Hitachi	HD75154	
	SiliconG	SG75154	
	TI	SN75154	
DS75160	TI	SN75160	
DS75161	TI	SN75161	
DS75162	TI	SN75162	
DS75207	TI	SN75207B	
DS75208	TI	SN75208B	
DS75322	TI	SN75322	
DS75324	TI	SN75324	
DS75325	Motorola	MC75325	
	SiliconG	SG75325	
	TI	SN75325	
DS75361	TI	SN75361	
		SN75361A	
DS75362	TI	SN75362	
DS75365	Motorola	MC75365	
	TI	SN75365	
DS75450	Fairchild	75450	
	Motorola	MC75450	
	SiliconG	SG75450	
	TI	SN75450	
DS75451	Fairchild	75451	
	Motorola	MC75451	
	SiliconG	SG75451	
	TI	SN75451	
DS75452	Fairchild	75452	
	Hitachi	HD75452	
	Motorola	MC75452	
	SiliconG	SG75452	
	TI	SN75452	
DS75453	Fairchild	75453	
	Hitachi	HD75453	
	Motorola	MC75453	
	National	LM75453	
	SiliconG	SG75453	
	TI	SN75453	
DS75454	Motorola	MC75454	
	SiliconG	SG75454	
	TI	SN75454	
DS75460	Motorola	MC75460	
	SiliconG	SG75460	
	TI	SN75460	
DS75461	Fairchild	75461	
	Motorola	MC75401	
		MC75461	
	SiliconG	SG75461	
	TI	SN75461	
DS75462	Fairchild	75462	
	Motorola	MC75402	
		MC75462	
	SiliconG	SG75462	
	TI	SN75462	
DS75463	Motorola	MC75403	
		MC75463	
	SiliconG	SG75463	
	TI	SN75463	
DS75464	Motorola	MC75404	
		MC75464	
	National	SG75464	
	SiliconG	SG75464	
	TI	SN75464	
DS75491	Fairchild	75491	
	Motorola	MC75491	
	TI	SN75491	
DS75492	Fairchild	75492	
	Motorola	MC75492	
	TI	SN75492	
DS75493	TI	SN75493	
DS75494	TI	SN75494	
DS75S24	Fairchild	75S24	
	Hitachi	HA1902	
	Motorola	MC7524	
	Signetics	7524	
	SiliconG	SG7524	
	TI	SN75224	
		SN7524	
DS7820	TI	SN55182	
DS7830	TI	SN55183	
DS7831	TI	DS7831	
DS7832	TI	DS7832	
DS7838	AMD	DS7838	
DS7880	TI	SN55480	
DS8615	Motorola	MC12015	
DS8616	Plessey	SP8793	
DS8617	Motorola	MC12017	
DS8621	Motorola	MC12071	
DS8627	Plessey	SP8656	
DS8628	Plessey	SP8658	
DS8640	Signetics	SP380	
DS8641	Motorola	DS8641	
DS8674	Motorola	MC6888	
		MC8T98	
	National	DM8098	
	Signetics	**N8T98**	**876**
	TI	SN74368	
DS8800	TI	SN75180	
DS8808	National	MH8808	
DS8820	National	DS8880	
	TI	DS8820	
		SN75182	
		SN75480	
DS8830	TI	DS8830	
		SN75183	
DS8831	TI	DS8831	
DS8832	TI	DS8832	
DS8834	**Signetics**	**N8T34**	**876**
DS8836	**Signetics**	**N8T380**	**876**
DS8837	Motorola	MC3437	
	Signetics	**N8T37**	**876**
DS8838	Motorola	MC3438	
	Signetics	**N8T38**	**876**
DS8880	National	DS8820	
	TI	DS8820	
		SN75182	
		SN75480	
DS8889	Motorola	MC3491	
DS8T26A	Fairchild	μA8T26A	
	Motorola	MC8T26A	
	Signetics	**N8T26A**	**876**
	TI	N8T26A	
DS8T28	Fairchild	μA8T28	
IDM2901A	**AMD**	**AM2901B**	**1401**
	Fairchild	29F01	
		F2901A	
IDM2909	AMD	AM2909	
IDM2911	AMD	AM2911	
IDM29702	AMD	AM29702	
IDM29703	AMD	AM29703	
IDM29705	AMD	AM29705	
	Fairchild	29705	
		29F705	
INS1771	Western	FD1771	
INS2651	Signetics	SCN2651	
	SMC	COM2651	
INS2652	Signetics	INS2652	
INS8035	AMD	8035	
	Fujitsu	MBL8035	
	Intel	8035	
	NEC	μPD8035	
	Signetics	SCN8035	
INS8039	AMD	D8039	
	Fujitsu	MBL8039	
	Intel	8039	
	NEC	μPD8039	
	Signetics	SCN8039	
INS8048	AMD	8048	
	Fujitsu	MBL8048	
	Intel	8048	
	NEC	μPD8048	
	Signetics	SCN8048	
	Toshiba	TMP8048	
INS8049	Fujitsu	MBL8049	
	Intel	8049	
	NEC	μPD8049	
	Signetics	SCN8049	
INS8060	National	ISP-8A/600	
	Signetics	ISP-8A/600	
INS8080A	AMD	9080	
		9080A	
		AM9080	
	Intel	8080A	
	National	DP8080A	
	NEC	μPD8080	
	TI	TMS8080	
		TMS8080A	
INS8212	AMD	8212	
		AM3212	
	National	DP8212	
	NEC	μPB8212	
	TI	**SN74S412**	**1033**
INS8214	AMD	8214	
	Intel	8214	
	NEC	μPB8214	
INS8216	Intel	8216	
	National	DP8216	
	NEC	μPB8216	
INS8224	AMD	8224	
	Intel	8224	
INS8224	National	DP8224	
	NEC	μPB8224	
INS8226	Intel	8226	
	National	DP8226	
	NEC	μPB8226	
INS8228	AMD	8228	
	Intel	8228	
	National	DP8228	
	NEC	μPB8228	
	TI	**SN74S428**	**1034**
		TIM8228	
INS8238	AMD	8238	
	Intel	8238	
	National	DP8238	
	NEC	μPB8238	
	TI	**SN74S438**	**1034**
		TIM8238	
INS8251	AMD	8251	
		AM9551	**1436**
	Intel	8251A	
	National	DP8251	
	NEC	μPB8251	
	SMC	COM8251A	
	Western	TR1983	
INS8253	AMD	8253	
	Intel	8253	
	NEC	μPD8253	
INS8255	AMD	8255A-5	
		AM9555	
	Intel	8255A-5	
	NEC	μPD8225	
		μPD8255	
INS8259	AMD	D8259	
	Fujitsu	MBL8259	
	Intel	8259	
	NEC	μPD8259	
ISP-8A/600	National	INS8060	
	Signetics	ISP-8A/600	
LF11201	AD	ADG201	
	Harris	HI201	
	MicroPwr	MP201	
	National	LF13201	
LF11202	PMI	SW-02	
	Siliconix	DG202	
LF11508	AD	AD7501	
	Burr-Brown	MPC8S	
	Datel	**MX-808**	**2864**
	Harris	HI-508	
		HI508	
		HI508A	
	Intersil	IH6108	
	MicroPwr	MP7501	
		MP7508	
	National	LF13508	
	PMI	DMX-88	
		MUX-08	
		MUX-88	
	Siliconix	DG508	
		DG508A	
	TeledyneP	4554	
LF11509	**Burr-Brown**	**MPC4D**	**2850**
	Datel	**MXD-409**	**2864**
	Harris	HI-509	
		HI509	
		HI509A	
	Intersil	IH6208	
	MicroPwr	MP7509	
	National	LF13509	
	PMI	MUX-24	
	Siliconix	DG509	
		DG509A	
	TeledyneP	4553	
LF12333	PMI	SW-06	
LF13201	AD	ADG201	
	Harris	HI201	
	MicroPwr	MP201	
	National	LF11201	
LF13202	PMI	SW-02	
	Siliconix	DG202	
LF13331	PMI	SW-04	
LF13332	PMI	SW-03	
LF13333	PMI	SW-06	
LF13508	AD	AD7501	
	Burr-Brown	MPC8S	
	Datel	**MX-808**	**2864**
	Harris	HI-508	
		HI508	
		HI508A	
	Intersil	IH6108	
	MicroPwr	MP7501	
		MP7508	
	National	LF11508	
LF13508	PMI	DMX-88	
		MUX-08	
		MUX-88	
	Siliconix	DG508	
		DG508A	
	TeledyneP	4554	
LF13509	**Burr-Brown**	**MPC4D**	**2850**
	Datel	**MXD-409**	**2864**
	Harris	HI-509	
		HI509	
		HI509A	
	Intersil	IH6208	
	MicroPwr	MP7509	
	National	LF11509	
	PMI	MUX-24	
	Siliconix	DG509	
		DG509A	
	TeledyneP	4553	
LF147	Harris	LF147	
LF153	Harris	LF153	
LF155	AMD	LF155	
	Intersil	LF155	
	Motorola	LF155	
	PMI	OP-15	
		PM155	
	Thomson-CSF	TDC0155	
LF156	AMD	LF156	
	Intersil	LF156	
	MicroPwr	OP-16	
	PMI	OP-16	
		PM156	
	Thomson-CSF	TDC0156	
LF157	AMD	LF157	
	Intersil	LF157	
	MicroPwr	OP-17	
	PMI	OP-17	
		PM157	
	Signetics	LF157	
	Thomson-CSF	TDC0157	
LF247	Harris	LF247	
LF253	Harris	LF253	
LF255	AMD	LF255	
	PMI	PM255	
	Thomson-CSF	TDE0155	
LF256	AMD	LF256	
	Thomson-CSF	TDE0156	
LF257	AMD	LF257	
	Thomson-CSF	TDE0157	
LF347	Exar	XR074	
	Harris	LF347	
	Motorola	MC34004	
	TI	TL074	
		TL084C	
	Thomson-CSF	TDB0084	
		TDB0084A	
		TDB0347	
LF353	Harris	LF353	
LF355	AMD	LF355	
	Intersil	LF355	
	Motorola	LF355	
	PMI	PM355	
LF356	AMD	LF356	
	Intersil	LF356	
	Motorola	LF356	
	PMI	PM356	
	Signetics	LF356	
LF357	AMD	LF357	
	AnalogSys	LF357	
	Intersil	LF357	
	Motorola	LF357	
	PMI	PM357	
LF398	Fairchild	μAF398	
	National	LM298	
	PMI	SMP-10	
	Signetics	**NE5537**	**3669**
LH0002	OEI	9910	
LH0022	AD	AD506	
	National	LM0052	
	TeledyneP	1424	
		1425	
LH0032	OEI	9932	
	TeledyneP	0032	
LH0033	**Harris**	**HA-5033**	**3462**
	TeledyneP	1359	
LH0042	AD	AD0042	
		AD503	

(Continued)

◆ Discontinued

The manufacturers report their devices can be used as direct replacements.
Performance details often differ, so compare the specifications considering your requirements.

National Semiconductor (Cont'd)

Manufacturer Device	Replacement Source	Device	IC Master Page
LH0042	Intersil	AD503	
		LH0042	
LH0044	AD	AD510	
		AD517	
		ADOP-07	**3351**
	Burr-Brown	3510	
	Datel	**AM-430**	**2864**
		AM-490-2	
	Fairchild	μA714	
	Harris	HA-2900	
		HA-2905	
		HA-5130	
		HA-5135	
	MicroPwr	MP517	
		MP5505	
		MP5507	
		OP-07	**3529**
	NEC	μPC725	
	PMI	**OP-05**	**3566**
		OP-07	**3566**
	Raytheon	**OP-05**	**3592**
		OP-07	**3592**
	TeledyneP	1340	
	TI	OP-07	
LH0062	AD	AD528	
LH0063	OEI	9963	
LH101	Apex	PA02	
LH2101	AMD	LH2101	
	Intersil	LH2101	
	Raytheon	LH2101	
LH2108	Intersil	LH2108	
	PMI	PM2108	
LH2108A	Intersil	LH2108A	
	PMI	PM2108A	
LH2110	Intersil	LH2110	
LH2111	AMD	LH2111	
	Intersil	LH2111	
	Raytheon	LH2111	
LH2201	AMD	LH2201	
	Raytheon	LH2201	
LH2208	PMI	PM2208	
LH2208A	Intersil	LH2208A	
	PMI	PM2208A	
LH2211	AMD	LH2211	
LH2301	AMD	LH2301	
	Intersil	LH2301	
LH2308	Intersil	LH2308	
	PMI	PM2308	
LH2308A	Intersil	LH2308A	
	PMI	PM2308A	
LH2310	Intersil	LH2310	
LH2311	AMD	LH2311	
	Intersil	LH2311	
LM0052	AD	AD506	
	National	LH0022	
	TeledyneP	1424	
		1425	
LM10	MCE	MCE-LM10	
LM1017	TI	SN29764	
LM101A	LinearTech	LM101A	
	TI	LM101A	
LM104	Thomson-CSF	SFC2104	
LM105	AMD	LM105	
	Fairchild	μA105	
	Intersil	LM105	
	SiliconG	SG105	
	Thomson-CSF	SFC2105	
LM106	TI	LM106	
LM107	AMD	LM107	
	AD	**AD741S**	**3351**
	Intersil	LM107	
	LinearTech	LM107	
	Raytheon	LM107	
	SiliconG	SG107	
	TI	LM107	
	Thomson-CSF	SFC2107	
LM108	AMD	LM108	
	AD	**AD108**	**3351**
	Fairchild	μA108	
		μA725	
	Intel	ISBC108	
	Intersil	ICL108	
		LM108	
	LinearTech	LM108	
		LM108A	
		OP-05	
		(Continued)	

Manufacturer Device	Replacement Source	Device	IC Master Page
LM108	MicroPwr	MP5501	
		MP5505	
		MPLM108A	
		OP-08	
	Motorola	LM108	
	National	LM108A	
	NEC	μPC154	
	PMI	OP-01	
		OP-05	**3566**
		OP-06	
		OP-07	**3566**
		PM108	
		PM725	
	Raytheon	**OP-05**	**3592**
		OP-07	**3592**
		RC725	
		RM725	
	Signetics	LM108	
LM108A	AMD	LM108	
	AD	**AD108**	**3351**
	Fairchild	μA108	
		μA725	
	Intel	ISBC108	
	Intersil	ICL108	
		LM108	
	LinearTech	LM108	
		LM108A	
		OP-05	
	MicroPwr	MP5501	
		MP5505	
		MPLM108A	
		OP-08	
	Motorola	LM108	
	National	LM108	
	NEC	μPC154	
	PMI	OP-01	
		OP-05	**3566**
		OP-06	
		OP-07	**3566**
		PM108	
		PM725	
	Raytheon	**OP-05**	**3592**
		OP-07	**3592**
		RC725	
		RM725	
	Signetics	LM108	
LM109	Fairchild	μA109	
	Motorola	LM109	
	SiliconG	SG109	
	TI	SN55109	
	Thomson-CSF	SFC2109	
LM11	LinearTech	LM11	
	Motorola	LM11	
LM110	AMD	LM110	
	Intersil	LM110	
	SiliconG	SG110	
LM111	AMD	LM111	
	AD	AD111	
	Fairchild	μA111	
	Intersil	LM111	
	Motorola	LM111	
	Raytheon	LM111	
	Signetics	LM111	
	SiliconG	SG111	
	TI	LM111	
	Thomson-CSF	SFC2111	
LM112	AMD	LM112	
LM113	AD	AD589	
	Ferranti	ZN423	
	Intersil	**ICL8069**	**3521**
	MicroPwr	**MP5010**	**3529**
	National	LM313	
	TeledyneS	9491	
LM117	LinearTech	LM117	
	MCE	MCE-LM117	
	Motorola	**LM117**	**3532**
	SiliconG	SG117	
	TI	LM117	
LM118	AMD	LM118	
	LinearTech	LM118	
	TI	LM118	
LM119	AMD	LM119	
	Signetics	LM119	
LM120-12	SiliconG	SG120-12	
LM120-15	SiliconG	SG120-15	
LM123	LinearTech	LM123	
	Motorola	**LM123**	**3531**
		MC78T05	
	SiliconG	SG123	
	TI	SN55123	

Manufacturer Device	Replacement Source	Device	IC Master Page
LM124A	AMD	LM124A	
	Motorola	LM124A	
	RCA	CA124A	
	Signetics	LM124A	
	SiliconG	SG124	
	TI	LM124A	
LM1303	**Exar**	**XR4739**	**3378**
	Fairchild	μA739	
		μA749	
	Raytheon	**RC4739**	**3592**
	SGS	TBA231	
	TI	SN76131	
		SN76149	
LM1310	Exar	XR1310	
	Hitachi	HA1156	
	RCA	CA1310	
	Sanyo	LA3301	
		LA3350	
	Sprague	ULN-3810	
	TI	SN76115	
	Toshiba	TA7157	
LM136	LNT	LM136	
LM13600	Exar	XR13600	
	PMI	LM13600	
	Raytheon	LM13600	
LM137	LinearTech	LM137	
	MCE	MCE-LM137	
	Motorola	**LM137**	**3532**
	TI	LM137	
LM138	LNT	LM138	
	Micropac	MLM138	
LM139	AMD	LM139	
	Fairchild	μA139	
	Motorola	LM139	
	PMI	CMP-04	
		PM139	
	Raytheon	LM139	
	RCA	**CA139**	**3599**
	Signetics	LM139	
	SiliconG	SG139	
	TI	LM139	
LM1391	Motorola	MC1391	
	RCA	CA1391	
LM1394	Motorola	MC1394	
	RCA	CA1394	
LM139A	AMD	LM139A	
	Motorola	LM139A	
	PMI	CMP-04	
		PM139A	
	RCA	**CA139A**	**3599**
	SiliconG	SG139A	
	TI	LM139A	
LM140	**Exar**	**XR146**	**3377**
	Raytheon	LM146	
LM140-05	SiliconG	SG140-05	
LM140-12	SiliconG	SG140-12	
LM140-15	SiliconG	SG140-15	
LM1414	Motorola	MC1414	
	TI	TL514	
		TL720	
LM143	**Datel**	**AM-464-2M**	**2864**
	Exar	**XR1527A**	**3381**
	Harris	**HA-2640**	**3412**
	Motorola	MC1536	
	National	LM1536	
	SiliconG	SG1536	
LM1436	**Datel**	**AM-464-2**	**2864**
	Harris	HA-2645	
	Motorola	MC1436	
		MC1439	
	National	LM343	
	SiliconG	SG1436	
	TeledyneP	1332	
LM1458	AMD	AM1458	
	Exar	XR1458	
		XR4558	
	Fairchild	μA1458	
	Harris	HA-2655	
	Hitachi	HA17458	
	MicroPwr	MPOP14	
	Motorola	MC1458	
		MC4558C	
		RC4558	
	NEC	μPC1458	
		μPC4558	
	PMI	PM1458	
	Raytheon	RC1458	
		RC4558	**3592**
	RCA	CA1458	
		LM1458	
		RC4558	
		SSS1458	
		(Continued)	

Manufacturer Device	Replacement Source	Device	IC Master Page
LM1458	Sanyo	LA6458A	
	Signetics	MC1458	
		NE4558	
	SiliconG	SG1458	
	TI	MC1458	
		RC4558	
LM146-2	Raytheon	LM146-2	
LM148	AMD	LM148	
	Raytheon	LM148	
		RM4156	
	TI	LM148	
LM149	AMD	LM149	
LM1496	Fairchild	μA796	
	Motorola	MC1496	
	Plessey	SL1496	
	Signetics	MC1496	
	SiliconG	SG1496	
LM150	LinearTech	LM150	
	Motorola	**LM150**	**3532**
	SiliconG	SG150	
LM1514	Motorola	MC1514	
	TI	TL514	
LM1536	**Datel**	**AM-464-2M**	**2864**
	Exar	**XR1527A**	**3381**
	Harris	**HA-2640**	**3412**
	Motorola	MC1536	
	National	LM143	
	SiliconG	SG1536	
LM1558	AMD	AM1558	
	Exar	XR1558	
	Fairchild	μA1558	
	Harris	**HA-2650**	**3414**
	Motorola	MC1558	
		MC4558	
		RC1558	
	PMI	**OP-14**	**3566**
		PM1558	
	Raytheon	RC1558	
		RM1558	
		RM4558	
	RCA	CA1558	
		LM1558	
		SSS1558	
	Signetics	MC1558	
	SiliconG	SG1558	
	TI	MC1558	
		RM4558	
LM158A	Motorola	LM158	
	Raytheon	RM4139	
	RCA	CA158A	
	Signetics	LM158	
	TI	LM158	
LM1596	Motorola	MC1596	
	Plessey	SL1596	
	Signetics	MC1596	
	SiliconG	SG1596	
LM160	Fairchild	μA760	
	PMI	CMP-05	
LM161	PMI	CMP-05	
	Signetics	**SE529**	**3622**
LM1611	National	DS1611	
LM1612	National	DS1612	
LM1613	National	DS1613	
LM1614	National	DS1614	
LM163	National	DS1603	
LM1709	Fairchild	μA709	
	Hitachi	HA1303	
	Motorola	MC1709	
	National	LM709	
	NEC	μPC255	
		μPC55	
	Raytheon	RC709	
		RM709	
	RCA	CA3038	
	TI	μA709	
	Thomson-CSF	SFC2709	
	Toshiba	TA7502	
LM1800	Motorola	μA758	
	RCA	CA758	
	Signetics	μA758	
	TI	SN76111	
		SN76116	
LM1820	RCA	CA3123	
	TI	SN76635	
LM1827	Sprague	ULN-2224	
LM1829	National	LM3126	
	RCA	CA3126	
LM1848	RCA	CA3172	
LM185	LinearTech	LM185	
LM1870	Signetics	LM1870	

◆ Discontinued

Bold face device numbers indicate manufacturers data is provided in the IC Master on the pages noted.

© IC MASTER 1984

National Semiconductor (Cont'd)

Manufacturer Device	Replacement Source	Device	IC Master Page
LM193A	Fairchild	μA193	
	Motorola	LM193	
	Signetics	LM193	
	TI	LM193	
LM196	Micropac	MLM196	
LM2002	Fairchild	TDA2002	
	National	LM383	
	RCA	CA2002	
	SGS	TBA2002	
	Sprague	ULN-3701	
		ULN-3702	
LM201	AMD	LM201	
	AD	AD201	
	Fairchild	μA201	
		μA748	
	Intersil	LM748	
		μA748	
	Motorola	LM201	
		MC1748	
	National	LM748	
	Plessey	SL748	
	RCA	CA201	
		CA748	
		LM748	
	SiliconG	SG201	
		SG748	
	TI	LM201	
		SN72748P	
		μA748	
	Thomson-CSF		
		SFC2201	
		SFC2748	
LM201A	TI	LM201A	
LM202	AMD	LM202	
	SiliconG	SG202	
LM204	SiliconG	SG204	
	Thomson-CSF		
		SFC2204	
LM205	AMD	LM205	
	SiliconG	SG205	
	Thomson-CSF		
		SFC2205	
LM207	AMD	LM207	
	RCA	CA207	
	SiliconG	SG207	
	TI	SN55207	
	Thomson-CSF		
		SFC2207	
LM208	AMD	LM208	
	AD	**AD208**	**3351**
	Fairchild	μA208	
	LinearTech	OP-05	
	MicroPwr	MP5505	
		MP5508	**3529**
		MPLM208	**3529**
	Motorola	LM208	
	PMI	**OP-05**	**3566**
		PM208	
	Raytheon	**OP-05**	**3592**
	SiliconG	SG208	
	TI	μA714	
	Thomson-CSF		
		SFC2208	
LM208A	MicroPwr	MPLM208A	
LM209	AMD	LM209	
	Fairchild	μA209	
	Lambda	LLM209	
	Motorola	LM209	
	SiliconG	SG209	
	Thomson-CSF		
		SFC2209	
LM210	AMD	LM210	
	SiliconG	SG210	
	Thomson-CSF		
		SFC2210	
LM211	AMD	LM211	
	AD	AD211	
	Motorola	LM211	
	RCA	LM211	
	Signetics	LM211	
	SiliconG	SG211	
	TI	LM211	
	Thomson-CSF		
		SFC2211	
LM2111	Motorola	MC1357	
	RCA	CA2111	
	Signetics	N5111	
	Sprague	ULN-2111	

(Continued)

Manufacturer Device	Replacement Source	Device	IC Master Page
LM2111	TI	SN76642	
		SN76643	
LM217	MCE	MCE-LM217	
	Motorola	**LM217**	**3532**
	SiliconG	SG217	
	TI	LM217	
	Thomson-CSF		
		TDE0117	
LM218	AMD	LM218	
	TI	LM218	
	Thomson-CSF		
		TDE0118	
LM219	AMD	LM219	
	Signetics	LM219	
	Thomson-CSF		
		TDE0119	
LM220	Lambda	LLM220	
	SiliconG	SG220	
LM220-12	SiliconG	SG220-12	
LM220-15	SiliconG	SG220-15	
LM220-05	SiliconG	SG220-05	
LM223	Lambda	LLM223	
	Motorola	**LM223**	**3531**
	SiliconG	SG223	
	Thomson-CSF		
		TDE0123	
LM224	AMD	LM224	
	Fairchild	μA224	
	Motorola	LM224	
	Raytheon	LM224	
	RCA	CA224	
	Signetics	LM224	
	SiliconG	SG224	
	TI	LM224	
	Thomson-CSF		
		TDE0124	
LM237	MCE	MCE-LM237	
	TI	LM237	
LM239	AMD	LM239	
	Fairchild	μA239	
	Motorola	LM239	
	PMI	CMP-04	
		PM239	
	Raytheon	LM239	
	RCA	**CA239**	**3599**
	Signetics	LM239	
	SiliconG	SG239	
	TI	LM239	
	Thomson-CSF		
		TDE0139	
LM239A	AMD	LM239A	
	Motorola	LM239A	
	PMI	CMP-04	
	RCA	**CA239A**	**3599**
	SiliconG	SG239A	
LM246	**Exar**	**XR246**	**3377**
	Raytheon	LM246	
	Thomson-CSF		
		TDE0146	
LM248	AMD	LM248	
	TI	LM248	
	Thomson-CSF		
		TDE0148	
LM249	AMD	LM249	
LM250	**Motorola**	**LM250**	**3532**
	SiliconG	SG250	
LM258A	Motorola	LM258	
	RCA	CA258A	
	Signetics	LM258	
	TI	LM258	
	Thomson-CSF		
		TDE0158	
LM285	Motorola	LM285	
LM2900	Hitachi	HA17301	
	Motorola	LM2900	
		MC3301	
	National	LM3301	
	Raytheon	LM2900	
		RC3301	
	TI	LM2900	
LM2901	Fairchild	μA2901	
		μA3302	
	Motorola	LM2901	
		MC3302	
	National	LM3302	
	NEC	μPC2901	
	PMI	CMP-04	
	Raytheon	LM2901	
		RC3302	
	RCA	CA3302	
	Signetics	LM2901	
		MC3302	
	SiliconG	SG3302	

(Continued)

Manufacturer Device	Replacement Source	Device	IC Master Page
LM2901	TI	LM2901	
		LM3302	
LM2902	Fairchild	μA2902	
	Hitachi	HA17902	
	Motorola	LM2902	
	NEC	μPC2902	
	Raytheon	LM2902	
	TI	LM2902	
LM2903	AMD	LM311	
	AD	AD311	
	Fairchild	μA2903	
		μA311	
	Intersil	LM311	
	Motorola	LM2903	
		LM311	
	National	LM311	
	NEC	μPC271	
		μPC311	
	Raytheon	LM311	
	RCA	**CA311**	**3598**
		LM311	
	Signetics	LM2903	
		LM311	
	SiliconG	SG311	
	TI	LM2903	
		LM311	
	Thomson-CSF		
		SFC2311	
		SFC3111	
LM2904	Motorola	LM2904	
	RCA	CA2904	
	TI	LM2904	
LM2907	Cherry	CS2907-D14	
LM2917	Cherry	CS2917	
LM293	Fairchild	μA293	
	Motorola	LM293	
	Signetics	LM293	
	TI	LM293	
LM298	Fairchild	μAF398	
	National	LF398	
	PMI	SMP-10	
	Signetics	**NE5537**	**3669**
LM301	AD	AD301	
	~~Fairchild~~	~~μA301A~~	
	Intersil	AD301	
	LinearTech	LM301	
		LM301A	
	Motorola	LM301	
	National	LM301A	
	NEC	μPC157	
		μPC301	
	Raytheon	LM301	
	RCA	CA301	
		LM301	
	SiliconG	SG301	
	TI	LM301	
		LM301A	
	Thomson-CSF		
		SFC2301	
	Toshiba	TA7506	
LM3011	Motorola	MC1590	
	RCA	CA3011	
		CA3012	
LM3018	**RCA**	**CA3018**	**3601**
	Thomson-CSF		
		SFC2018	
LM3019	**RCA**	**CA3019**	**3601**
LM301A	AD	AD301	
	Fairchild	μA301A	
	Intersil	AD301	
	LinearTech	LM301	
		LM301A	
	Motorola	LM301	
	National	LM301	
	NEC	μPC157	
		μPC301	
	Raytheon	LM301	
	RCA	CA301	
		LM301	
	SiliconG	SG301	
	TI	LM301	
		LM301A	
	Thomson-CSF		
		SFC2301	
	Toshiba	TA7506	
LM302	AMD	LM302	
	Intersil	LM302	
	SiliconG	SG302	
LM304	NEC	μPC142	
	SiliconG	SG304	
	Thomson-CSF		
		SFC2304	

Manufacturer Device	Replacement Source	Device	IC Master Page
LM3045	Fairchild	μA3045	
	Hitachi	HA1127	
	Plessey	SL3045	
		SL3145	
	RCA	**CA3045**	**3601**
	Sanyo	LA3045	
	SiliconG	SG3045	
		SG3821	
	Sprague	ULS-2045	
LM3046	Fairchild	μA3046	
	Motorola	MC3346	
	Plessey	SL3046	
		SL3146	
	RCA	**CA3046**	**3601**
		CA3146	**3601**
	Sanyo	LA3046	
	SiliconG	SG3046	
		SG3146	
		SG3821	
	Sprague	ULN-2046	
LM305	AMD	LM305	
	Fairchild	μA305	
	Intersil	LM305	
	NEC	μPC141	
	SiliconG	SG305	
	Thomson-CSF		
		SFC2305	
LM3054	Fairchild	μA3054	
	Motorola	CA3054	
	RCA	CA3054	
	SiliconG	SG3822	
	Sprague	ULN-2054	
	Thomson-CSF		
		SFC2054	
LM306	AMD	LM306	
	TI	LM306	
LM3064	Motorola	M5140	
		MC1358	
	RCA	CA3064	
		CA3065	
	Sanyo	LA1365	
	TI	SN76666	
LM3066	RCA	CA3066	
	~~TI~~	~~SN76266~~	
LM307	AMD	LM307	
	AD	**AD741J**	**3351**
	Intersil	LM307	
	LinearTech	LM307	
	Motorola	LM307	
	Raytheon	LM307	
	RCA	CA307	
	SiliconG	SG307	
	TI	LM307	
	Thomson-CSF		
		SFC2307	
LM3072	RCA	CA3072	
LM3075	RCA	CA3075	
	TI	SN76675	
LM308	AMD	LM308	
	AD	**AD308**	**3351**
	Burr-Brown	3500	
		3501	
	Fairchild	μA308	
	Intersil	AD308	
		LM308	
	MicroPwr	MP5505	
		MPLM308	**3529**
	Motorola	LM308	
	Raytheon	LM308	
	SiliconG	SG308	
	Thomson-CSF		
		SFC2308	
LM3086	Fairchild	μA3086	
	Motorola	MC3386	
	Plessey	SL3086	
	RCA	**CA3086**	**3601**
	Sanyo	LA3086	
	SiliconG	SG3086	
		SG3886	
	Sprague	ULN-2086	
LM3089	Hitachi	HA1137	
		HA1230	
	National	CA3089	
	RCA	CA3089	
	Sanyo	LA1230	
		LA3089	
	SGS	TCA3089	
		TDA1200	
	Signetics	CA3089	
	Telefunken	U417	
	TI	SN76689	
LM308A	MicroPwr	MPLM308A	

◆ Discontinued

The manufacturers report their devices can be used as direct replacements.
Performance details often differ, so compare the specifications considering your requirements.

National Semiconductor (Cont'd)

Manufacturer Device	Replacement Source	Replacement Device	IC Master Page
LM309	AMD	LM309	
	Fairchild	μA309	
		μA7805	
	Lambda	LLM309	
		LMC7805	
		LμA7805	
	Motorola	LM309	
		MC7805	**3531**
	National	LM7805	
	NEC	μPC7805	
	SGS	L7805	
		L7810	
	SiliconG	SG309	
		SG340-05	
		SG340-5	
	TI	μA7805	
	Thomson-CSF		
		SFC2309	
	Toshiba	TA78005	
LM310	AMD	LM310	
	Intersil	LM310	
	PMI	BUF-03	
	SiliconG	SG310	
	Thomson-CSF		
		SFC2310	
LM311	AMD	LM311	
	AD	AD311	
	Fairchild	μA2903	
		μA311	
	Intersil	LM311	
	Motorola	LM2903	
		LM311	
	National	LM2903	
	NEC	μPC271	
		μPC311	
	Raytheon	LM311	
	RCA	**CA311**	**3598**
		LM311	
	Signetics	LM2903	
		LM311	
	SiliconG	SG311	
	TI	LM2903	
		LM311	
	Thomson-CSF		
		SFC2311	
		SFC3111	
LM312	AMD	LM312	
	SiliconG	SG3118	
LM3126	National	LM1829	
	RCA	CA3126	
LM313	AD	AD589	
	Ferranti	ZN423	
	Intersil	**ICL8069**	**3521**
	MicroPwr	**MP5010**	**3529**
	National	LM113	
	TeledyneS	9491	
LM317	Fairchild	μA317	
	LinearTech	LM317	
	MCE	MCE-LM317	
	Motorola	**LM317**	**3532**
	SiliconG	SG317	
	TI	LM317	
	Thomson-CSF		
		TDB0117	
LM317M	**Motorola**	**LM317M**	**3532**
LM318	AMD	LM318	
	AD	AD518	
	Fairchild	μA318	
	NEC	μPC159	
	TI	LM318	
	Thomson-CSF		
		TDB0118	
LM319	AMD	LM319	
	NEC	μPC319	
	Signetics	LM319	
LM320	Lambda	LLM320	
LM320-15	Fairchild	μA7915	
	Lambda	LμA7915	
	Motorola	MC7915	
	National	LM320T15	
		LM7915	
	SiliconG	SG320-15	
		SG7915	
	TI	LM320-5	
		μA7915	
	Thomson-CSF		
		TDB2915	
LM320-5	Motorola	MC7952	
	SiliconG	SG320-5	

(Continued)

Manufacturer Device	Replacement Source	Replacement Device	IC Master Page
LM320-5	SiliconG	SG320-5	
	TI	LM320-5	
	Thomson-CSF		
		TDB2905	
	SiliconG	SG320-5	
LM320MP12	Fairchild	μA7912	
		μA79M12	
	Lambda	LμA7912	
	Motorola	MC7912	
	National	LM7912	
		LM79M12	
	SiliconG	SG320P-12	
		SG7912	
	TI	LM320-12	
		μA7912	
	Thomson-CSF		
		TDB2912	
LM320MP5	Fairchild	μA7905	
		μA79M05	
	Lambda	LMC7905	
		LμA7905	
	Motorola	MC7905	
	National	LM7905	
		LM79M05	
	SiliconG	SG120-5	
		SG320-05	
		SG320P-5	
		SG7905	
	TI	μA7905	
LM320T15	Fairchild	μA7915	
	Lambda	LμA7915	
	Motorola	MC7915	
	National	LM320-15	
		LM7915	
	SiliconG	SG320-15	
		SG7915	
	TI	LM320-5	
		μA7915	
	Thomson-CSF		
		TDB2915	
LM323	Fairchild	SH0323	
		SH323	
		μA78H05	
	Lambda	LAS1405	
		LAS1905	
	LinearTech	LM323	
	Micropac	M78H05	
	Motorola	**LM323**	**3531**
		MC78T05C	
	SiliconG	SG323	
LM324	AMD	LM324	
	Exar	**XR3403**	**3378**
		XR3403C	
	Fairchild	μA324	
		μA3403	
	Motorola	LM324	
		MC3403	
	NEC	μPC324	
	Raytheon	LM324	
		RC3403	
		RC4137	
	RCA	CA324	
		LM324	
	Sanyo	LA6324	
	Signetics	LM324	
		MC3403	
	SiliconG	SG324	
	TI	LM324	
		MC3403	
	Thomson-CSF		
		TDB0124	
LM324A	TI	LM324A	
LM3301	Hitachi	HA17301	
	Motorola	LM2900	
		MC3301	
	National	LM2900	
	Raytheon	LM2900	
		RC3301	
	TI	LM2900	
LM3302	Fairchild	μA2901	
		μA3302	
	Motorola	LM2901	
		MC3302	
	National	LM2901	
	NEC	μPC2901	
	PMI	CMP-04	
	Raytheon	LM2901	
		RC3302	
	RCA	CA3302	
	Signetics	LM2901	
		MC3302	
	SiliconG	SG3302	

(Continued)

Manufacturer Device	Replacement Source	Replacement Device	IC Master Page
LM3302	TI	LM2901	
		LM3302	
LM336	LNT	LM336	
LM337	LinearTech	LM337	
	MCE	MCE-LM337	
	TI	LM337	
	Thomson-CSF		
		TDB0137	
LM338	LinearTech	LM338	
	Micropac	MLM338	
LM339	AMD	LM339	
		LM339A	
	Fairchild	μA339	
	Hitachi	HA17901	
	Motorola	LM339	
	NEC	μPC339	
	PMI	CMP-04	
		PM339A	
	Raytheon	LM339	
	RCA	**CA339**	**3599**
		CA339A	**3599**
		LM339	
	SiliconG	SG339	
	TI	LM339	
	Thomson-CSF		
		TDB0139	
LM340	Lambda	LLM340	
LM340-15	Fairchild	μA7815	
		μA78L15	
	Lambda	LMC7815	
		LμA7815	
	Motorola	**MC7815**	**3531**
		MC78L15	
	National	LM340LA-15	
		LM340T-15	
		LM7815	
		LM78L15	
	NEC	μPC7815	
		μPC78L15	
	SGS	L7815	
	SiliconG	SG340-15	
		SG7815	
	TI	LM340-15	
		μA7815	
		μA78L15	
	Thomson-CSF		
		SFC2815	
	Toshiba	TA78015	
LM3401	Motorola	MC3401	
	National	LM3900	
	Raytheon	LM3900	
		RC3401	
	RCA	CA3401	
	TI	LM3900	
LM340LA-12	Fairchild	μA78L12	
	Motorola	MC78L12	
	National	LM78L12	
	NEC	μPC78L12	
	TI	μA78L12	
	Thomson-CSF		
		SFC2812	
LM340LA-15	Fairchild	μA7815	
		μA78L15	
	Lambda	LMC7815	
		LμA7815	
	Motorola	**MC7815**	**3531**
		MC78L15	
	National	LM340-15	
		LM340T-15	
		LM7815	
		LM78L15	
	NEC	μPC7815	
		μPC78L15	
	SGS	L7815	
	SiliconG	SG340-15	
		SG7815	
	TI	LM340-15	
		μA7815	
		μA78L15	
	Thomson-CSF		
		SFC2815	
	Toshiba	TA78015	
LM340LA-5	Fairchild	μA78L05	
	Motorola	MC78L05	
	National	LM78L05	
	NEC	μPC78L05	
	TI	μA78L05	
	Thomson-CSF		
		SFC2805	
LM340T-15	Fairchild	μA7815	
		μA78L15	
	Lambda	LMC7815	

(Continued)

Manufacturer Device	Replacement Source	Replacement Device	IC Master Page
LM340T-15	Lambda	LμA7815	
	Motorola	**MC7815**	**3531**
		MC78L15	
	National	LM340-15	
		LM340LA-15	
		LM7815	
		LM78L15	
	NEC	μPC7815	
		μPC78L15	
	SGS	L7815	
	SiliconG	SG340-15	
		SG7815	
	TI	LM340-15	
		μA7815	
		μA78L15	
	Thomson-CSF		
		SFC2815	
	Toshiba	TA78015	
LM341-12	NEA	μPC78M12	
	Fairchild	μA78M12	
	Motorola	MC78M12	
	National	LM342-12	
		LM78M12	
	NEC	μPC78M12	
	Sanyo	L78M12	
LM341-15	Fairchild	μA78M15	
	Motorola	MC78M15	
	National	LM342-15	
		LM78M15	
	NEC	μPC78M15	
	Sanyo	L78M15	
LM341-5	Fairchild	μA78M05	
	Motorola	MC78M05	
	National	LM342-05	
		LM78M05	
	NEC	μPC78M05	
	Sanyo	L78M05	
	TI	μA78M05	
LM342-05	Fairchild	μA78M05	
	Motorola	MC78M05	
	National	LM341-5	
		LM78M05	
	NEC	μPC78M05	
	Sanyo	L78M05	
	TI	μA78M05	
LM342-12	NEA	μPC78M12	
	Fairchild	μA78M12	
	Motorola	MC78M12	
	National	LM341-12	
		LM78M12	
	NEC	μPC78M12	
	Sanyo	L78M12	
LM342-15	Fairchild	μA78M15	
	Motorola	MC78M15	
	National	LM341-15	
		LM78M15	
	NEC	μPC78M15	
	Sanyo	L78M15	
LM343	**Datel**	**AM-464-2**	**2864**
	Harris	HA-2645	
	Motorola	MC1436	
		MC1439	
	National	LM1436	
	SiliconG	SG1436	
	TeledyneP	1332	
LM346	**Exar**	**XR346**	**3377**
	Raytheon	LM346	
	Thomson-CSF		
		TDB0146	
LM348	AMD	LM348	
	Exar	**XR4212**	**3378**
	Fairchild	μA348	
	Harris	HA-4741	
	MicroPwr	MP5511	
	Motorola	MC4741	
	NEC	μPC4741	
	PMI	OP-11	
	Raytheon	HA4741	
		LM348	
		RC4156	
	TI	LM348	
	Thomson-CSF		
		TDB0111	
		TDB0148	
LM349	AMD	LM349	
	Thomson-CSF		
		TDB0149	
LM350	Fairchild	μA78HGA	
	Lambda	LAS14U	
		LAS19U	
	LinearTech	LM350	
	Motorola	**LM350**	**3532**

(Continued)

◆ Discontinued

Bold face device numbers indicate manufacturers data is provided in the IC Master on the pages noted.

© IC MASTER 1984

National Semiconductor (Cont'd)

Manufacturer Device	Replacement Source	Device	IC Master Page
LM350	SiliconG	SG350	
	TI	LM350	
LM358A	Motorola	LM358	
	NEC	μPC358	
	RCA	CA358A	
		LM358	
	Sanyo	LA6358	
	Signetics	LM358	
		NE532	
	TI	LM358	
LM361	**Signetics**	**NE529**	**3622**
LM3611	National	DS3611	
	Sprague	UDN-3611	
	TI	SN75471	
LM3612	National	DS3612	
		DS3632	
	Sprague	UDN-3612	
	TI	SN75472	
LM3613	National	DS3613	
	Sprague	UDN-3613	
	TI	SN75473	
LM3614	National	DS3614	
	Sprague	UDN-3614	
	TI	SN75474	
LM376	Fairchild	μA376	
LM377	TI	SN76177	
LM380	Sprague	ULN-2280	
LM383	Fairchild	TDA2002	
	National	LM2002	
	RCA	CA2002	
	SGS	TBA2002	
	Sprague	ULN-3701	
		ULN-3702	
LM385	LinearTech	LM385	
	Motorola	LM385	
LM386	MCE	MCE-386	
LM388	TI	LM388	
LM3900	Motorola	MC3401	
	National	LM3401	
	Raytheon	LM3900	
		RC3401	
	RCA	CA3401	
	TI	LM3900	
LM3911	NEC	μPC3911	
LM393	Fairchild	μA393	
	Motorola	LM393	
	Sanyo	LA6393	
	Signetics	LM393	
	TI	LM393	
LM396	Micropac	MLM396	
LM4250	Fairchild	μA776	
	Harris	**HA-2720**	**3416**
	Intersil	ICL8021	
		LM4250	
	Motorola	MC1776	
	SiliconG	SG4250	
	Solitron	UC4250	
LM4500	Motorola	TCA4500	
	Siemens	TCA4500	
LM550	Signetics	SE550	
LM55107A	Fairchild	55107	
	Motorola	MC55107	
	National	DS55107	
	TI	SN55107	
		SN55107B	
LM55108A	Fairchild	55108	
	Motorola	MC55108	
	National	DS55108	
	TI	SN55108	
		SN55108B	
LM5520	SiliconG	SG5520	
	TI	SN5520	
LM5521	SiliconG	SG5521	
LM5522	Motorola	MC5522	
		MC5523	
	SiliconG	SG5522	
	TI	SN5522	
LM5523	SiliconG	SG5523	
LM5524	Fairchild	MC5524	
	Motorola	MC5524	
	Raytheon	RM5524	
	SiliconG	SG5524	
	TI	SN5524	
LM5525	Fairchild	MC5525	
	Motorola	MC5525	
	SiliconG	SG5525	
LM5528	Fairchild	MC5528	
	Motorola	MC5528	

(Continued)

Manufacturer Device	Replacement Source	Device	IC Master Page
LM5528	SiliconG	SG5528	
	TI	SN5528	
LM5529	Fairchild	MC5529	
	Motorola	MC5529	
	SiliconG	SG5529	
LM55325	Fairchild	MC55325	
	Motorola	MC55325	
	National	DS55325	
	Signetics	55325	
	SiliconG	SG55325	
	TI	SN55325	
LM5534	Fairchild	MC5534	
	Motorola	MC5534	
	SiliconG	SG5534	
LM5535	Motorola	MC5535	
	SiliconG	SG5535	
	TI	SN5535	
LM5538	SiliconG	SG5538	
LM5539	Motorola	MC5539	
	SiliconG	SG5539	
LM55453	Fairchild	55453	
	National	DS55453	
	Signetics	55453	
	SiliconG	SG55453	
	TI	SN55453	
LM555	Cherry	CS555	
	Exar	XR555	
	Fairchild	μA555	
	Hitachi	HA17555	
	Motorola	MC1455	
	NEC	μPC1555	
	Raytheon	RC555	
	RCA	CA355	
		CA555	**3604**
	Sanyo	LB8555	
	Signetics	NE555	
	SiliconG	SG555	
	TI	NE555	
LM556	AMD	LM556	
	Exar	XR556	
		XR556M	
	Fairchild	μA556	
	Motorola	MC3456	
		MC3556	
	Raytheon	RC556	
		RM556	
	Signetics	NE556	
		SE556	**526**
	SiliconG	SG556	
	TI	NE556	
		SE556	
LM565	Signetics	NE565	
		SE565	
LM566	Signetics	NE566	
		SE566	
LM567	**Exar**	**XR2567**	**3367**
		XR567	
	MCE	MCE-567	
	Signetics	NE567	
		SE567	
LM709	Fairchild	μA709	
	Hitachi	HA1303	
	Motorola	MC1709	
	National	LM1709	
	NEC	μPC255	
		μPC55	
	Raytheon	RC709	
		RM709	
	RCA	CA3038	
	TI	μA709	
	Thomson-CSF		
		SFC2709	
	Toshiba	TA7502	
LM710	Fairchild	μA710	
	Motorola	LM710	
		MC1710	
	PMI	CMP-01	
		CMP-02	
	SiliconG	SG710	
	TI	μA710	
	Thomson-CSF		
		SFC2710	
LM711	Fairchild	μA711	
	Motorola	MC1711	
	SiliconG	SG711	
	TI	μA711	
	Thomson-CSF		
		SFC2711	
LM723	Fairchild	μA723	
	Hitachi	HA17723	
	Intersil	LM723	
	Motorola	**MC1723**	**3532**

(Continued)

Manufacturer Device	Replacement Source	Device	IC Master Page
LM723	Raytheon	RC723	
		RM723	
	RCA	**CA723**	**3602**
		LM723	
	SGS	L123	
	Signetics	μA723	
	SiliconG	SG723	
	TI	μA723	
	Thomson-CSF		
		SFC2723	
LM733	Fairchild	μA733	
	Hitachi	HA17733	
	Intersil	μA733	
	Motorola	MC1733	
		NE592	
	Signetics	μA733	
	SiliconG	SG733	
	TI	μA733	
LM741	**AD**	**AD741**	**3351**
	Fairchild	3871	
		μA741	
	Hitachi	HA17741	
	Intersil	AD741	
		ICL741	
	MicroPwr	MP5501	
		MP5502	**3529**
		OP-02	**3529**
	Mostek	MK3871	
	Motorola	LM741	
		MC1741	
	NEC	μPC151	
		μPC741	
	PMI	OP-01	
		OP-02	**3566**
		PM741	
		SSS741	
	Raytheon	RC741	
		RM741	
	RCA	CA3056	
		CA741	
	Signetics	μA741	
	SiliconG	SG300	
		SG741	
	TI	μA741	
	Thomson-CSF		
		SFC2741	
	Toshiba	TA7504	
LM747	AMD	747	
	Fairchild	μA747	
	Hitachi	HA17747	
	MicroPwr	MPOP04	
	Motorola	MC1747	
	NEC	μPC251	
	PMI	**OP-04**	**3566**
		PM747	
	Raytheon	RC747	
		RM747	
	RCA	CA747	
	Signetics	μA747	
	SiliconG	SG747	
	TeledyneS	747	
	TI	μA747	
LM748	AMD	LM201	
	AD	AD201	
	Fairchild	μA201	
		μA748	
	Intersil	LM748	
		μA748	
	Motorola	LM201	
		MC1748	
	National	LM201	
	Plessey	SL748	
	RCA	CA201	
		CA748	
		LM748	
	SiliconG	SG201	
		SG748	
	TI	LM201	
		SN72748P	
		μA748	
	Thomson-CSF		
		SFC2201	
		SFC2748	
LM75107A	Fairchild	75107	
	Motorola	MC75107	
	National	DS75107	
	TI	SN75107	
		SN75107B	
LM75108A	Fairchild	75108	
	Motorola	MC75108	
	National	DS75108	

(Continued)

Manufacturer Device	Replacement Source	Device	IC Master Page
LM75108A	TI	SN75108	
		SN75108B	
LM75110	Fairchild	75110	
	Hitachi	HD75110	
	Motorola	MC75110	
	TI	SN75110	
		SN75110A	
LM75121	Motorola	MC8T13	
	National	DS75121	
	Signetics	**N8T13**	**876**
	TI	N8T13	
		SN75121	
LM75122	Motorola	MC8T14	
	National	DS75122	
	Signetics	N8T14	
	TI	N8T14	
		SN75122	
LM75123	Motorola	MC8T23	
	National	DS75123	
	Signetics	**N8T23**	**876**
	TI	N8T23	
		SN75123	
LM75124	Motorola	MC8T24	
	National	DS75124	
	Signetics	**N8T24**	**876**
	TI	N8T24	
		SN75124	
LM7521	Fairchild	7521	
	Motorola	MC7521	
	SiliconG	SG7521	
	TI	SN7521	
LM7523	Motorola	MC7523	
	Raytheon	RC7523	
	SiliconG	SG7523	
	TI	SN7523	
LM7525	AMD	7525	
	Fairchild	7525	
	Motorola	MC7525	
	SiliconG	SG7525	
LM7529	Fairchild	7529	
	Motorola	MC7529	
	Raytheon	RC7529	
	SiliconG	SG7529	
LM7535	Motorola	MC7535	
	SiliconG	SG7535	
LM7538	Fairchild	7538	
	Motorola	MC7538	
	SiliconG	SG7538	
LM7539	Fairchild	7539	
	Motorola	MC7539	
	SiliconG	SG7539	
LM75453	Fairchild	75453	
	Hitachi	HD75453	
	Motorola	MC75453	
	National	DS75453	
	SiliconG	SG75453	
	TI	SN75453	
LM7805	AMD	LM309	
	Fairchild	μA309	
		μA7805	
	Lambda	LLM309	
		LMC7805	
		LμA7805	
	Motorola	LM309	
		MC7805	**3531**
	National	LM309	
	NEC	μPC7805	
	SGS	L7805	
		L7810	
	SiliconG	SG309	
		SG340-05	
		SG340-5	
	TI	μA7805	
	Thomson-CSF		
		SFC2309	
	Toshiba	TA78005	
LM7812	Fairchild	μA7812	
	Lambda	LMC7812	
		LμA7812	
	Motorola	**MC7812**	**3531**
	NEC	μPC7812	
	SGS	L7812	
	SiliconG	SG7812	
	TI	μA7812	
	Toshiba	TA78012	
LM7815	Fairchild	μA7815	
		μA78L15	
	Lambda	LMC7815	
		LμA7815	
	Motorola	**MC7815**	**3531**
		MC78L15	
	National	LM340-15	

(Continued)

◆ Discontinued

The manufacturers report their devices can be used as direct replacements.
Performance details often differ, so compare the specifications considering your requirements.

SECTION	PRODUCTS IN SECTION
Digital	Arithmetic functions, buffers/inverters, counters, decoders, drivers, flip-flops, gates, latches, memories, multiplexers, multivibrators, oscillators/dividers, shift registers, translators.
Military	Military-commercial/commercial-military cross-references; QPL-38510/xx list; military ICs.
Microprocessor	Microprocessors, microcomputers, and microprocessor system components.
Microprocessor Development Systems	Systems covered range from simple, single-user, text-editing stations to multi-user computers, dedicated to software development.
Microcomputer Boards	Microcomputer boards, hardware and software support.
Microcomputer Support Boards	Boards with functions and peripheral controllers
Interface	Analog switches, analog-to-digital converters, digital-to-analog converters, display converters, display drivers, error checking circuits, keyboard encoders-decoders, drivers, sense amplifiers, and transmitters/receivers.
Linear	Special-purpose amplifiers, arrays, comparators, consumer circuits, followers, operational amplifiers, phase locked loop circuits, telecommunication circuits, timers, voltage regulators, and special functions.
Memory	Character generators, code converters, FIFOs, LIFOS, E^2PROMs, PROMs, RAMs, ROMs, and shift registers.
PROM Programmers	Programmers for system development, production, and field service.
Custom/ Semicustom	Custom/semicustom gate arrays, standard cells, PLAs

SIX KEY PHASES OF NEW SYSTEM DEVELOPMENT

Planning

A good design

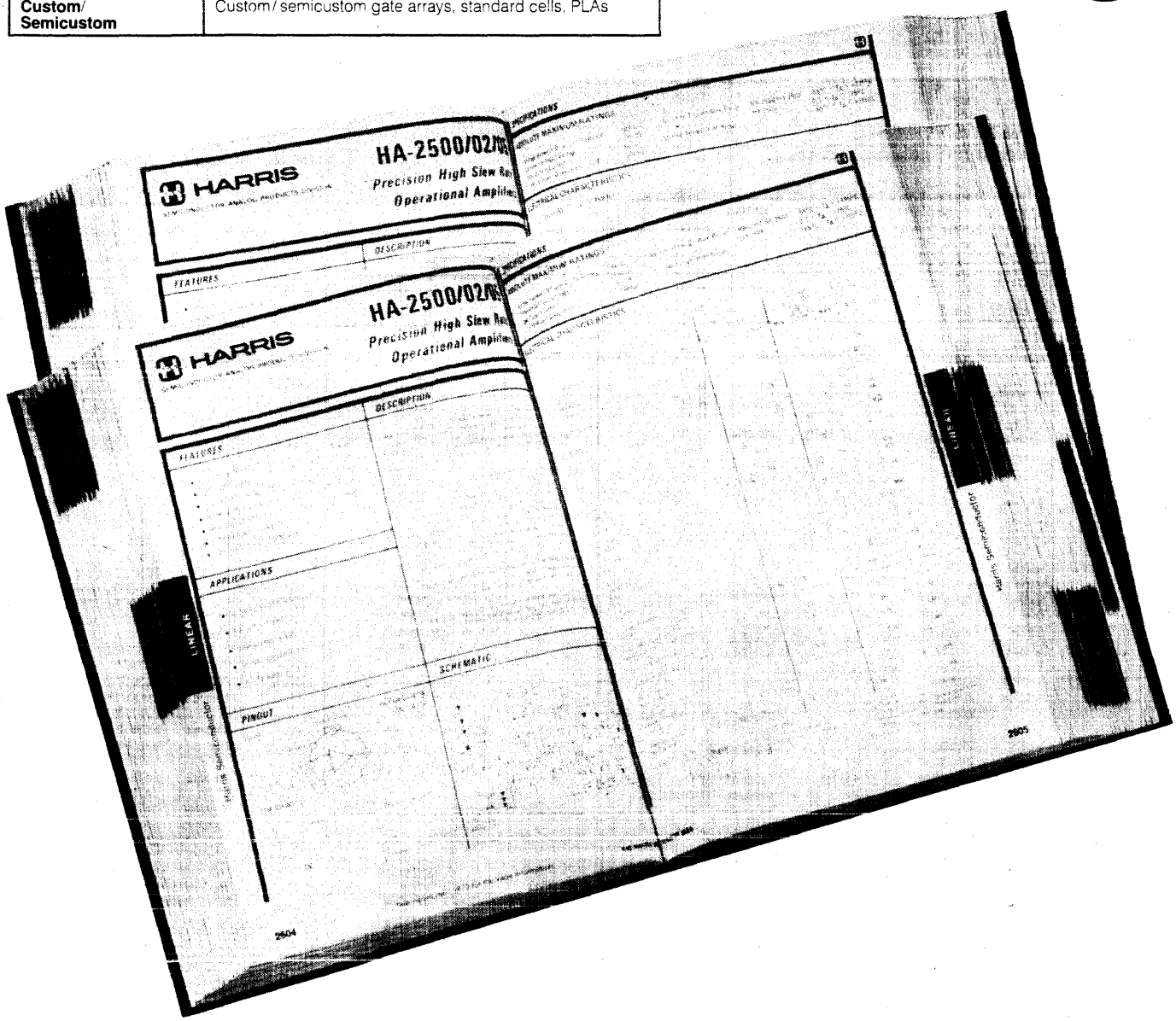

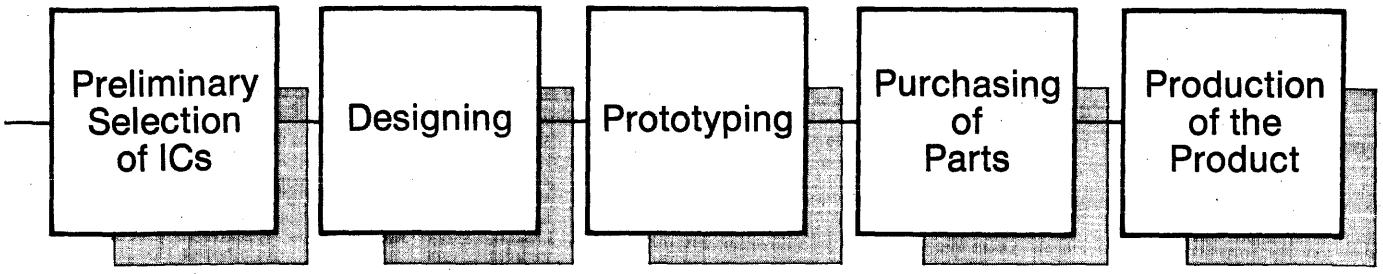

is "mastered" early.

When is the best time for an engineer to pick the integrated circuits that will go into his next design?

The best time is at an early stage in the design process when the engineer's plans are still flexible enough to take full advantage of the features selected.

There is a point in the early phases of every design when engineers focus on selecting integrated circuits. Specifications are examined, relative strengths and weaknesses of various devices are weighed, and the field of candidates is chosen. This is the critical time in the design cycle when designers want to be sure the right devices are in serious contention for their applications.

It is at this moment that the engineer reaches into his technical reference library. Of the material on his shelves, **IC MASTER** is the only reference source that has been especially prepared for this moment.

The engineer can look up each precise function that he needs and see all of the devices and their manufacturers that might satisfy his requirements. He sees this information for all manufacturers, not just for advertisers. But if an IC maker has chosen to include technical data for his products in **IC MASTER,** the engineer sees each index listing for that manufacturer in **bold face type** accompanied by the **page number** on which the data appears; the engineer can then turn immediately to the advertiser's technical data and see if the device fits his needs.

Next time, begin with the MASTER.

IC MASTER

National Semiconductor (Cont'd)

Manufacturer Device	Replacement Source	Device	IC Master Page
LM7815	National	LM340LA-15	
		LM340T-15	
		LM78L15	
	NEC	μPC7815	
		μPC78L15	
	SGS	L7815	
	SiliconG	SG340-15	
		SG7815	
	TI	LM340-15	
		μA7815	
		μA78L15	
	Thomson-CSF		
		SFC2815	
	Toshiba	TA78015	
LM78L05	Fairchild	μA78L05	
	Motorola	MC78L05	
	National	LM340LA-5	
	NEC	μPC78L05	
	TI	μA78L05	
	Thomson-CSF		
		SFC2805	
LM78L12	Fairchild	μA78L12	
	Motorola	MC78L12	
	National	LM340LA-12	
	NEC	μPC78L12	
	TI	μA78L12	
	Thomson-CSF		
		SFC2812	
LM78L15	Fairchild	μA7815	
		μA78L15	
	Lambda	LMC7815	
		LμA7815	
	Motorola	**MC7815**	**3531**
		MC78L15	
	National	LM340-15	
		LM340LA-15	
		LM340T-15	
		LM7815	
	NEC	μPC7815	
		μPC78L15	
	SGS	L7815	
	SiliconG	SG340-15	
		SG7815	
	TI	LM340-15	
		μA7815	
		μA78L15	
	Thomson-CSF		
		SFC2815	
	Toshiba	TA78015	
LM78M05	Fairchild	μA78M05	
	Motorola	MC78M05	
	National	LM341-5	
		LM342-05	
	NEC	μPC78M05	
	Sanyo	L78M05	
	TI	μA78M05	
LM78M12	NEA	μPC78M12	
	Fairchild	μA78M12	
	Motorola	MC78M12	
	National	LM341-12	
		LM342-12	
	NEC	μPC78M12	
	Sanyo	L78M12	
LM78M15	Fairchild	μA78M15	
	Motorola	MC78M15	
	National	LM341-15	
		LM342-15	
	NEC	μPC78M15	
	Sanyo	L78M15	
LM7905	Fairchild	μA7905	
		μA79M05	
	Lambda	LMC7905	
		LμA7905	
	Motorola	MC7905	
	National	LM320MP5	
		LM79M05	
	SiliconG	SG120-5	
		SG320-05	
		SG320P-5	
		SG7905	
	TI	μA7905	
LM7912	Fairchild	μA7912	
		μA79M12	
	Lambda	LμA7912	
	Motorola	MC7912	
	National	LM320MP12	
		LM79M12	
	SiliconG	SG320P-12	
		SG7912	

(Continued)

Manufacturer Device	Replacement Source	Device	IC Master Page
LM7912	TI	LM320-12	
		μA7912	
	Thomson-CSF		
		TDB2912	
LM7915	Fairchild	μA7915	
	Lambda	LμA7915	
	Motorola	MC7915	
	National	LM320-15	
		LM320T15	
	SiliconG	SG320-15	
		SG7915	
	TI	LM320-5	
		μA7915	
	Thomson-CSF		
		TDB2915	
LM79M05	Fairchild	μA7905	
		μA79M05	
	Lambda	LMC7905	
		LμA7905	
	Motorola	MC7905	
	National	LM320MP5	
		LM7905	
	SiliconG	SG120-5	
		SG320-05	
		SG320P-5	
		SG7905	
	TI	μA7905	
LM79M12	Fairchild	μA7912	
		μA79M12	
	Lambda	LμA7912	
	Motorola	MC7912	
	National	LM320MP12	
		LM7912	
	SiliconG	SG320P-12	
		SG7912	
	TI	LM320-12	
		μA7912	
	Thomson-CSF		
		TDB2912	
MCA1200	**LSILogic**	**LCA1200**	**4762**
MCA1300	Motorola	MCA1300	
MCA500	Motorola	MCA500	
MCA600	**LSILogic**	**LCA600**	**4762**
MH0025	National	DS0025	
MH0026	AMD	MMH0026	
	Intersil	**ICL7667**	**3013**
	National	DS0026	
MH0056	National	DS0056	
MH8808	National	DS8808	
MM1702	AMD	AM1702A	
MM2102A	Fairchild	2102H	
	Panasonic	MN2102	
	SGS	M2102A	
MM2141	EMM-SESCO	4044	
	Intel	2141	
		2141A	
	Intersil	IM7141	
	Mostek	MK4104	
	Motorola	MCM6641	
	NEC	μPD4104	
	TI	TMS4044	
	Zilog	Z6104	
MM2142	Intel	2142	
MM2147	AMD	AM2147	
	AMI	4017	
	Fujitsu	MBM2147	
	Hitachi	HM4847	
	Intel	2147	
	Intersil	IM2147	
	ITT	4547	
	Motorola	MCM2147	
	NEC	μPD2147	
	Synertek	SY2147	
	TI	TMS2147	
	Toshiba	TMM315	
	Universal	UM2147	
MM2532	Hitachi	HN462532	
	Motorola	MCM2532	
	National	NMC2532	
		TDA2530	
		TDA2532	
	Plessey	TDA2530	
	Siemens	TDA2530	
	SiliconG	SG2532	
	TI	TMS2532	
	Universal	UM2532	
MM2708	AMD	AM2708	
	Hitachi	HN462708	
	Motorola	MC27A08	
		MCM2708	
	Panasonic	MN2708	

(Continued)

Manufacturer Device	Replacement Source	Device	IC Master Page
MM2708	Rockwell	2708	
	TI	TMS2708	
MM2716	AMD	AM2716	
	Fujitsu	MB2716	
	Hitachi	HN462716	
	Intel	2716	
	Mostek	MK2716	
	Motorola	MCM2716	
	NEC	μPD2716	
	OKI	**MSM2716**	**4118**
	Panasonic	MN2716	
	SGS	M2716	
	TI	TMS2516	
MM2716M	Fujitsu	MBM2716	
	Intel	M2716	
	Mostek	MKB2716	
MM2732	AMD	AM2732	
	Hitachi	HN462732	
	Intel	2732	
		2732A	
		M2732	
	Mitsubishi	M5L2732	
	National	NMC2732	
	NEC	μPD2732	
	Toshiba	TMM2732	
		TMM324C	
	Universal	UM2732	
MM4104	Fairchild	F4104	
	Mitel	MD4104	
	Motorola	MC14504	
	RCA	CD40109	
	SGS	HCF40109	
	Signetics	HEF4104	
MM5066	AMD	AM5056	
MM52116	AMD	AM9218	
	Fairchild	3516	
		68316	
		F3516	
		F35316	
		F68316	**1464**
	GI	R03-9316	
	GTEMicro	2316	
	Intel	2316	
	Mostek	MK34000	
	Motorola	MCM68316	
		MCM68A316	
		MM2316	
	National	MM5258	
	NCR	2316	
		NCR2316	
	NEC	μPD2316	
	OKI	**MSM2916**	**4118**
	Rockwell	R2316	
	SGS	M2316	
	TI	SBP8316	
	Toshiba	TMM331A	
		TMM334	
MM52132	AMD	AM9232	
	AMI	S68322	
		S68A332	
	Fairchild	F3532	
	GI	R094132	
		T094132	
	GTEMicro	2332	
	Hitachi	HN46332	
	Intersil	IM7332	
	Motorola	MC68332	
		MCM68332	
		MCM68A332	**4048**
	NCR	2332	
		NCR2332	
	NEC	**μPD2332**	**4100**
	OKI	**MSM2932**	**4118**
	RCA	**CDM5333**	**1593**
	Rockwell	R2332	
	SiliconG	SG3532	
	SSS	SCM23C32	
	SMC	ROM4732	
	Synertek	**SY2332**	**4211**
	TI	**TMS4732**	**4226**
	Toshiba	TM2332	
		TMM333	
	Universal	UM2332	
	VTI	**VT2332**	**4249**
MM52164	AMD	AM9264	
	AMI	S4264	
		S68A364	3933
	GTEMicro	2364-3	
	Hitachi	HN48364	
	Mostek	MK36000-5	
	Motorola	MCM68365	
		MCM68366	

(Continued)

Manufacturer Device	Replacement Source	Device	IC Master Page
MM52164	NCR	2364	
	NEC	UPD2/8364-30	
		μPD23/8364-30	
	OKI	MSM2965	
	Signetics	2664A-30	
	Synertek	**SY2364-3**	**4211**
	Toshiba	TMM2364	
	Weitek	SC8164	
MM5235	AMI	S68364	
	GI	R09464	
	GTEMicro	G5364	
	Intersil	IM7364	
	MicroPwr	MP2364	
	Mitsubishi	M5L2364	
	Mostek	MK36000	
	Motorola	**MCM68364**	**4048,4054**
	NCR	NCR2364	
	RCA	**CDM5364**	**1593**
	SMOS	SMM2364	
	SGS	M36000	
	Signetics	2664A	
	SSS	SCM23C64	
		SCM23C65	
	SMC	ROM36000	
	Synertek	**SY2364**	**4211**
	TI	**TMS4764**	**4225**
	Toshiba	TM2364	
	VTI	**VT2364**	**4250**
MM5258	AMD	AM9218	
	Fairchild	3516	
		68316	
		F3516	
		F35316	
		F68316	**1464**
	GI	R03-9316	
	GTEMicro	2316	
	Intel	2316	
	Mostek	MK34000	
	Motorola	MCM68316	
		MCM68A316	
		MM2316	
	National	MM52116	
	NCR	2316	
		NCR2316	
	NEC	μPD2316	
	OKI	**MSM2916**	**4118**
	Rockwell	R2316	
	SGS	M2316	
	TI	SBP8316	
	Toshiba	TMM331A	
		TMM334	
MM5280	Panasonic	MN1001	
MM5290	AMD	AM9016	
	Fairchild	F4116	
	Hitachi	HM4716	
	Intel	2118	
	Intersil	IM7116	
	ITT	ITT4116	
	Mostek	MK4116	
	Motorola	MCM4116	
	NEC	**μPD416**	**4073**
	Panasonic	MN4116	
	SGS	M4116	
	Siemens	HYB4116	
	Signetics	2690	
	TI	TMS4116	
MM5298	TI	TMS4108-15	
MM5303	AMI	S1602	
	Fairchild	3730	
		F6850	**1463**
	Fujitsu	MB8868A	
	GI	AY3-1015	
	Hitachi	HD6850	
		HD68A50	
	Motorola	**MC6850**	**1505**
	RCA	**CDP6402**	**1595**
	SMC	COM2017	
		COM2502H	
		COM8017	
	Thomson-CSF		
		EF6850	
	Western	TR1402	
		TR1602	
		TR1863	
MM54C04	Fairchild	F4069	
	Hitachi	HD14069	
	Motorola	MC14069	
	National	CD4069	
		MM74C04	
	OKI	MSM4069	
	RCA	CD4069	

(Continued)

◆ Discontinued

Bold face device numbers indicate manufacturers data is provided in the IC Master on the pages noted.

National Semiconductor (Cont'd)

Manufacturer Device	Replacement Source	Device	IC Master Page
MM54C04	Sanyo	LC4069	
	SGS	HCF4069	
	Signetics	HEF4069	
	SSS	SCL4069	
		SCL4449	
	Solitron	CM4069	
	Toshiba	TC4069	
MM54C14	Fairchild	F40014	
	Hitachi	HD14584	
	Motorola	MC14584	
	National	CD40106	
		CD4584	
		MM74C14	
	RCA	CD40106	
	SGS	HCF40106	
	Signetics	**HEF40106**	**865**
	SSS	SCL4584	
MM54C160	Fairchild	F40160	
	Hitachi	HD14160	
	Motorola	MC14160	
	National	CD40160	
		MM74C160	
	RCA	CD40160	
	SGS	HCF40160	
	SSS	SCL4160	
	Toshiba	TC40160	
MM54C161	Fairchild	F40161	
	Hitachi	HD14161	
	Motorola	MC14161	
	National	CD40161	
		MM74C161	
	RCA	CD40161	
	SGS	HCF40161	
	Signetics	HEF40161	
	SSS	SCL4161	
	Toshiba	TC40161	
MM54C162	Fairchild	F40162	
	Hitachi	HD14162	
	Motorola	MC14162	
	National	CD40162	
		MM74C162	
	RCA	CD40162	
	SGS	HCF40162	
	Signetics	HEF40162	
	SSS	SCL4162	
	Toshiba	TC40162	
MM54C163	Fairchild	F40163	
	Hitachi	HD14163	
	Motorola	MC14163	
	National	CD40163	
		MM74C163	
	RCA	CD40163	
	SGS	HCF40163	
	Signetics	HEF40163	
	SSS	SCL4163	
	Toshiba	TC40163	
MM54C173	Fairchild	F4076	
	Hitachi	HD14076	
	Motorola	MC14076	
	National	CD4076	
		MM74C173	
	RCA	CD4076	
	SGS	HCF4076	
	Signetics	HEF4076	
	SSS	SCL4076	
	Solitron	CM4076	
	Toshiba	TC4076	
MM54C174	Fairchild	F40174	
	Hitachi	HD14174	
	Motorola	MC14174	
	National	CD40174	
		MM74C174	
	RCA	CD40174	
	SGS	HCF40174	
	Signetics	HEF40174	
	SSS	SCL4174	
	Toshiba	TC40174	
MM54C175	Fairchild	F40175	
	Hitachi	HD14175	
	Motorola	MC14175	
	National	CD40175	
		MM74C175	
	Signetics	HEF40175	
	Toshiba	TC40175	
MM54C192	Fairchild	F40192	
	National	MM74C192	
MM54C193	Fairchild	F40193	
	National	CD40193	
		MM74C193	

(Continued)

Manufacturer Device	Replacement Source	Device	IC Master Page
MM54C193	RCA	CD40193	
	SGS	HCF40193	
	Signetics	HEF40193	
	SSS	SCL4193	
	Toshiba	TC40193	
MM54GC393	Motorola	MC54HC393	
	RCA	CD54HG393	
	Signetics	PCF54HC393	
MM54HC00	Motorola	MC54HC00	
	RCA	**CD54HC00**	**842**
	Signetics	PCF54HC00	
MM54HC02	Motorola	MC54HC02	
	RCA	**CD54HC02**	**842**
	Signetics	PCF54HC02	
MM54HC04	Motorola	MC54HC04	
	RCA	**CD54HC04**	**842**
	Signetics	PCF54HC04	
MM54HC08	Motorola	MC54HC08	
	RCA	**CD54HC08**	**842**
	Signetics	PCF54HC08	
MM54HC10	Motorola	MC54HC10	
	RCA	**CD54HC10**	**842**
	Signetics	PCF54HC10	
MM54HC107	Motorola	MC54HC107	
	RCA	**CD54HC107**	**842**
	Signetics	PCF54HC107	
MM54HC109	Motorola	MC54HC109	
	RCA	**CD54HC109**	**842**
	Signetics	PCF54HC109	
MM54HC11	Motorola	MC54HC11	
	RCA	**CD54HC11**	**842**
	Signetics	PCF54HC11	
MM54HC112	Motorola	MC54HC112	
	RCA	**CD54HC112**	**842**
	Signetics	PCF54HC112	
MM54HC123	Motorola	MC54HC123	
	RCA	**CD54HC123**	**842**
	Signetics	PCF54HC123	
MM54HC132	Motorola	MC54HC132	
	RCA	**CD54HC132**	**842**
	Signetics	PCF54HC132	
MM54HC133	Motorola	MC54HC133	
	RCA	CD54HC133	
	Signetics	PCF54HC133	
MM54HC138	Motorola	MC54HC138	
	RCA	**CD54HC138**	**842**
	Signetics	PCF54HC138	
MM54HC139	Motorola	MC54HC139	
	RCA	**CD54HC139**	**842**
	Signetics	PCF54HC139	
MM54HC14	Motorola	MC54HC14	
	RCA	**CD54HC14**	**842**
	Signetics	PCF54HC14	
MM54HC147	Motorola	MC54HC147	
	RCA	**CD54HC147**	**842**
	Signetics	PCF54HC147	
MM54HC151	Motorola	MC54HC151	
	RCA	**CD54HC151**	**842**
	Signetics	PCF54HC151	
MM54HC153	Motorola	MC54HC153	
	RCA	**CD54HC153**	**842**
	Signetics	PCF54HC153	
MM54HC154	Motorola	MC54HC154	
	RCA	**CD54HC154**	**842**
	Signetics	PCF54HC154	
MM54HC158	Motorola	MC54HC158	
	RCA	**CD54HC158**	**842**
	Signetics	PCF54HC158	
MM54HC160	Motorola	MC54HC160	
	RCA	**CD54HC160**	**842**
	Signetics	PCF54HC160	
MM54HC161	Motorola	MC54HC161	
	RCA	**CD54HC161**	**842**
	Signetics	PCF54HC161	
MM54HC162	Motorola	MC54HC162	
	RCA	**CD54HC162**	**842**
	Signetics	PCF54HC162	
MM54HC163	Motorola	MC54HC163	
	RCA	**CD54HC163**	**842**
	Signetics	PCF54HC163	
MM54HC164	Motorola	MC54HC164	
	RCA	**CD54HC164**	**842**
	Signetics	PCF54HC164	
MM54HC165	Motorola	MC54HC165	
	RCA	**CD54HC165**	**842**
	Signetics	PCF54HC165	
MM54HC173	Motorola	MC54HC173	
	RCA	**CD54HC173**	**842**
	Signetics	PCF54HC173	
MM54HC174	Motorola	MC54HC174	
	RCA	**CD54HC174**	**842**
	Signetics	PCF54HC174	

Manufacturer Device	Replacement Source	Device	IC Master Page
MM54HC175	Motorola	MC54HC175	
	RCA	**CD54HC175**	**842**
	Signetics	PCF54HC175	
MM54HC192	Motorola	MC54HC192	
	RCA	**CD54HC192**	**842**
	Signetics	PCF54HC192	
MM54HC193	Motorola	MC54HC193	
	RCA	**CD54HC193**	**842**
	Signetics	PCF54HC193	
MM54HC194	Motorola	MC54HC194	
	RCA	**CD54HC194**	**842**
	Signetics	PCF54HC194	
MM54HC195	Motorola	MC54HC195	
	RCA	**CD54HC195**	**842**
	Signetics	PCF54HC195	
MM54HC20	Motorola	MC54HC20	
	RCA	**CD54HC20**	**842**
	Signetics	PCF54HC20	
MM54HC221	Motorola	MC54HC221	
	RCA	**CD54HC221**	**842**
	Signetics	PCF54HC221	
MM54HC240	Motorola	MC54HC240	
	RCA	**CD54HC240**	**842**
	Signetics	PCF54HC240	
MM54HC241	Motorola	MC54HC241	
	RCA	**CD54HC241**	**842**
	Signetics	PCF54HC241	
MM54HC242	Motorola	MC54HC242	
	RCA	**CD54HC242**	**842**
	Signetics	PCF54HC242	
MM54HC243	Motorola	MC54HC243	
	RCA	**CD54HC243**	**842**
	Signetics	PCF54HC243	
MM54HC244	Motorola	MC54HC244	
	RCA	**CD54HC244**	**842**
	Signetics	PCF54HC244	
MM54HC245	Motorola	MC54HC245	
	RCA	**CD54HC245**	**842**
	Signetics	PCF54HC245	
MM54HC251	Motorola	MC54HC251	
	RCA	**CD54HC251**	**842**
	Signetics	PCF54HC251	
MM54HC253	Motorola	MC54HC253	
	RCA	**CD54HC253**	**842**
	Signetics	PCF54HC253	
MM54HC257	Motorola	MC54HC257	
	RCA	**CD54HC257**	**842**
	Signetics	PCF54HC257	
MM54HC259	Motorola	MC54HC259	
	RCA	**CD54HC259**	**842**
	Signetics	PCF54HC259	
MM54HC266	Motorola	MC54HC266	
	RCA	CD54HC266	
	Signetics	PCF54HC266	
MM54HC27	Motorola	MC54HC27	
	RCA	**CD54HC27**	**842**
	Signetics	PCF54HC27	
MM54HC280	Motorola	MC54HC280	
	RCA	**CD54HC280**	**842**
	Signetics	PCF54HC280	
MM54HC299	Motorola	MC54HC299	
	RCA	**CD54HC299**	**842**
	Signetics	PCF54HC299	
MM54HC30	Motorola	MC54HC30	
	RCA	CD54HC30	
	Signetics	PCF54HC30	
MM54HC32	Motorola	MC54HC32	
	RCA	**CD54HC32**	**842**
	Signetics	PCF54HC32	
MM54HC354	Motorola	MC54HC354	
	RCA	**CD54HC354**	**842**
	Signetics	PCF54HC354	
MM54HC356	Motorola	MC54HC356	
	RCA	**CD54HC356**	**842**
	Signetics	PCF54HC356	
MM54HC365	Motorola	MC54HC365	
	RCA	**CD54HC365**	**842**
	Signetics	PCF54HC365	
MM54HC366	Motorola	MC54HC366	
	RCA	**CD54HC366**	**842**
	Signetics	PCF54HC366	
MM54HC367	Motorola	MC54HC367	
	RCA	**CD54HC367**	**842**
	Signetics	PCF54HC367	
MM54HC368	Motorola	MC54HC368	
	RCA	**CD54HC368**	**842**
	Signetics	PCF54HC368	
MM54HC373	Motorola	MC54HC373	
	RCA	**CD54HC373**	**842**
	Signetics	PCF54HC373	

Manufacturer Device	Replacement Source	Device	IC Master Page
MM54HC374	Motorola	MC54HC374	
	RCA	**CD54HC374**	**842**
	Signetics	PCF54HC374	
MM54HC390	Motorola	MC54HC390	
	RCA	**CD54HC390**	**843**
	Signetics	PCF54HC390	
MM54HC4002	Motorola	MC54HC4002	
	RCA	**CD54HC4002**	**843**
	Signetics	PCF54HC4002	
MM54HC4017	Motorola	MC54HC4017	
	RCA	**CD54HC4017**	**843**
	Signetics	PCF54HC4017	
MM54HC4020	Motorola	MC54HC4020	
	RCA	**CD54HC4020**	**843**
	Signetics	PCF54HC4020	
MM54HC4040	Motorola	MC54HC4040	
	RCA	**CD54HC4040**	**843**
	Signetics	PCF54HC4040	
MM54HC4049	Motorola	MC54HC4049	
	RCA	**CD54HC4049**	**843**
	Signetics	PCF54HC4049	
MM54HC4050	Motorola	MC54HC4050	
	RCA	**CD54HC4050**	**843**
	Signetics	PCF54HC4050	
MM54HC4060	Motorola	MC54HC4060	
	RCA	**CD54HC4060**	**843**
	Signetics	PCF54HC4060	
MM54HC4075	Motorola	MC54HC4075	
MM54HC4078	Motorola	MC54HC4078	
MM54HC42	Motorola	MC54HC42	
	RCA	**CD54HC42**	**842**
	Signetics	PCF54HC42	
MM54HC4511	Motorola	MC54HC4511	
	RCA	**CD54HC4511**	**843**
	Signetics	PCF54HC4511	
MM54HC4514	Motorola	MC54HC4514	
	RCA	**CD54HC4514**	**843**
	Signetics	PCF54HC4514	
MM54HC4538	Motorola	MC54HC4538	
	RCA	**CD54HC4538**	**843**
	Signetics	PCF54HC4538	
MM54HC533	Motorola	MC54HC533	
	RCA	**CD54HC533**	**843**
	Signetics	PCF54HC533	
MM54HC534	Motorola	MC54HC534	
	RCA	**CD54HC534**	**843**
	Signetics	PCF54HC534	
MM54HC563	**RCA**	**CD54HC563**	**843**
	Signetics	PCF54HC563	
MM54HC564	**RCA**	**CD54HC564**	**843**
	Signetics	PCF54HC564	
MM54HC573	Motorola	MC54HC573	
	RCA	**CD54HC573**	**843**
	Signetics	PCF54HC573	
MM54HC574	Motorola	MC54HC574	
	RCA	**CD54HC574**	**843**
	Signetics	PCF54HC574	
MM54HC640	Motorola	MC54HC640	
	RCA	**CD54HC640**	**843**
	Signetics	PCF54HC640	
MM54HC643	Motorola	MC54HC643	
	RCA	**CD54HC643**	**843**
	Signetics	PCF54HC643	
MM54HC645	Motorola	MC54HC645	
	RCA	CD54HC645	
	Signetics	PCF54HC645	
MM54HC646	Motorola	MC54HC646	
	RCA	**CD54HC646**	**843**
	Signetics	PCF54HC646	
MM54HC648	Motorola	MC54HC648	
	RCA	**CD54HC648**	**843**
	Signetics	PCF54HC648	
MM54HC688	Motorola	MC54HC688	
	RCA	**CD54HC688**	**843**
	Signetics	PCF54HC688	
MM54HC73	Motorola	MC54HC73	
	RCA	**CD54HC73**	**842**
	Signetics	PCF54HC73	
MM54HC74	Motorola	MC54HC74	
	RCA	**CD54HC74**	**842**
	Signetics	PCF54HC74	
MM54HC75	Motorola	MC54HC75	
	RCA	**CD54HC75**	**842**
	Signetics	PCF54HC75	
MM54HC76	Motorola	MC54HC76	
	RCA	CD54HC76	
	Signetics	PCF54HC76	
MM54HC85	Motorola	MC54HC85	
	RCA	**CD54HC85**	**842**
	Signetics	PCF54HC85	

◆ Discontinued

The manufacturers report their devices can be used as direct replacements.
Performance details often differ, so compare the specifications considering your requirements.

National Semiconductor (Cont'd)

Manufacturer Device	Replacement Source	Device	IC Master Page
MM54HC86	Motorola	MC54HC86	
	RCA	**CD54HC86**	**842**
	Signetics	PCF54HC86	
MM54S289	AMD	SN5489-1	
		SN54S289	
		SN74S289	
	Fairchild	54S289	
	National	DM5489	
		DM54S289	
	Signetics	54S289	
		54S301	**532**
		S8225	
		S82S25	
	TI	SN5489	
		SN54S289	
MM5837	AMI	S2688	
MM58438	**AMI**	**S4521**	**2810**
	Hughes	HLCD0438	
	RCA	CD0438	
MM58538	Hughes	HLCD0538	
MM58539	Hughes	HLCD0539	
MM58540	Hughes	HLCD0540	
MM58548	Hughes	HLCD0548	
MM74C00	Fairchild	F4011	
	Hitachi	HD14011	
	Motorola	MC14011	
	National	CD4011	
	OKI	MSM4011	
	RCA	CD4011	
	Sanyo	LC4011	
	SGS	HCF4011	
	Signetics	HEF4011	
	SSS	SCL4011	
	Solitron	CM4011	
	Toshiba	TC4011	
MM74C02	Fairchild	F4001	
	Hitachi	HD14001	
	Motorola	MC14001	
	National	CD4001	
	OKI	MSM4001	
	RCA	CD4001	
	Sanyo	LC4001B	
	SGS	HCF4001	
	Signetics	HEF4001	
	SSS	SCL4001	
	Solitron	CM4001	
	Toshiba	TC4001	
MM74C04	Fairchild	F4069	
	Hitachi	HD14069	
	Motorola	MC14069	
	National	CD4069	
		MM54C04	
	OKI	MSM4069	
	RCA	CD4069	
	Sanyo	LC4069	
	SGS	HCF4069	
	Signetics	HEF4069	
	SSS	SCL4069	
		SCL4449	
	Solitron	CM4069	
	Toshiba	TC4069	
MM74C08	Fairchild	F4081	
	Hitachi	HD14081	
	Motorola	MC14081	
	National	CD4081	
	OKI	MSM4081	
	RCA	CD4081	
	Sanyo	LC4081	
	SGS	HCF4081	
	Signetics	HEF4081	
	SSS	SCL4081	
	Solitron	CM4081	
	Toshiba	TC4081	
MM74C10	Fairchild	F4023	
	Hitachi	HD14023	
	Motorola	MC14023	
	National	CD4023	
	RCA	CD4023	
	SGS	HCF4023	
	Signetics	HEF4023	
	SSS	SCL4023	
	Solitron	CM4023	
	Toshiba	TC4023	
MM74C14	Fairchild	F40014	
	Hitachi	HD14584	
	Motorola	MC14584	
	National	CD40106	
		CD4584	
		MM54C14	
		(Continued)	

Manufacturer Device	Replacement Source	Device	IC Master Page
MM74C14	RCA	CD40106	
	SGS	HCF40106	
	Signetics	**HEF40106**	**865**
	SSS	SCL4584	
MM74C160	Fairchild	F40160	
	Hitachi	HD14160	
	Motorola	MC14160	
	National	CD40160	
		MM54C160	
	RCA	CD40160	
	SGS	HCF40160	
	SSS	SCL4160	
	Toshiba	TC40160	
MM74C161	Fairchild	F40161	
	Hitachi	HD14161	
	Motorola	MC14161	
	National	CD40161	
		MM54C161	
	RCA	CD40161	
	SGS	HCF40161	
	Signetics	HEF40161	
	SSS	SCL4161	
	Toshiba	TC40161	
MM74C162	Fairchild	F40162	
	Hitachi	HD14162	
	Motorola	MC14162	
	National	CD40162	
		MM54C162	
	RCA	CD40162	
	SGS	HCF40162	
	Signetics	HEF40162	
	SSS	SCL4162	
	Toshiba	TC40162	
MM74C163	Fairchild	F40163	
	Hitachi	HD14163	
	Motorola	MC14163	
	National	CD40163	
		MM54C163	
	RCA	CD40163	
	SGS	HCF40163	
	Signetics	HEF40163	
	SSS	SCL4163	
	Toshiba	TC40163	
MM74C164	Fairchild	F4015	
	Hitachi	HD14015	
	Motorola	MC14015	
	National	CD4015	
	OKI	MSM4015	
	RCA	CD4015	
	Sanyo	LC4015	
	SGS	HCF4015	
	Signetics	HEF4015	
	SSS	SCL4015	
	Solitron	CM4015	
	Toshiba	TC4015	
MM74C173	Fairchild	F4076	
	Hitachi	HD14076	
	Motorola	MC14076	
	National	CD4076	
		MM54C173	
	RCA	CD4076	
	SGS	HCF4076	
	Signetics	HEF4076	
	SSS	SCL4076	
	Solitron	CM4076	
	Toshiba	TC4076	
MM74C174	Fairchild	F40174	
	Hitachi	HD14174	
	Motorola	MC14174	
	National	CD40174	
		MM54C174	
	RCA	CD40174	
	SGS	HCF40174	
	Signetics	HEF40174	
	SSS	SCL4174	
	Toshiba	TC40174	
MM74C175	Fairchild	F40175	
	Hitachi	HD14175	
	Motorola	MC14175	
	National	CD40175	
		MM54C175	
	Signetics	HEF40175	
	Toshiba	TC40175	
MM74C192	Fairchild	F40192	
	National	MM54C192	
MM74C193	Fairchild	F40193	
	National	CD40193	
		MM54C193	
	RCA	CD40193	
	SGS	HCF40193	
	Signetics	HEF40193	
		(Continued)	

Manufacturer Device	Replacement Source	Device	IC Master Page
MM74C193	SSS	SCL4193	
	Toshiba	TC40193	
MM74C195	Fairchild	F40195	
	National	CD40195	
MM74C221	Fairchild	F4528	
	Hitachi	HD14528	
	Motorola	MC14528	
	National	CD4528	
	RCA	CD4098	
	SGS	HCF4098	
	Signetics	HEF4528	
	SSS	SCL4528	
	Toshiba	TC4528	
MM74C32	Fairchild	F4071	
	Hitachi	HD14071	
	Motorola	MC14071	
	National	CD4071	
	OKI	MSM4071	
	RCA	CD4071	
	Sanyo	LC4071	
	SGS	HCF4071	
	Signetics	HEF4071	
	SSS	SCL4071	
	Solitron	CM4071	
	Toshiba	TC4071	
MM74C42	Fairchild	F4028	
	Hitachi	HD14028	
	Motorola	MC14028	
	National	CD4028	
	OKI	MSM4028	
	Sanyo	LC4028	
	SGS	HCF4028	
	Signetics	HEF4028	
	SSS	SCL4028	
	Solitron	CM4028	
	Toshiba	TC4028	
MM74C74	Fairchild	F4013	
	Hitachi	HD14013	
	Motorola	MC14013	
	National	CD4013	
	OKI	MSM4013	
	RCA	CD4013	
	Sanyo	LC4013	
	SGS	HCF4013	
	Signetics	HEF4013	
	SSS	SCL4013	
	Solitron	CM4013	
	Toshiba	TC4013	
MM74C76	Fairchild	F4027	
	Hitachi	HD14027	
	Motorola	MC14027	
	National	CD4027	
	OKI	MSM4027	
	RCA	CD4027	
	Sanyo	LC4027	
	SGS	HCF4027	
	Signetics	HEF4027	
	SSS	SCL4027	
	Solitron	CM4027	
MM74C83	Fairchild	F4008	
	Hitachi	HD14008	
	Motorola	MC14008	
	National	CD4008	
	RCA	CD4008	
	SGS	HCF4008	
	Signetics	HEF4008	
	SSS	SCL4008	
	Solitron	CM4008	
	Toshiba	TC4008	
MM74C85	Fairchild	F40085	
	Hitachi	HD14585	
	Motorola	MC14585	
	RCA	CD4585	
	Signetics	HEF4585	
	SSS	SCL4585	
	Toshiba	TC4585	
MM74C86	Fairchild	F4070	
	Hitachi	HD14070	
	Motorola	MC14070	
	National	CD4070	
	RCA	CD4070	
	SGS	HCF4070	
	Signetics	HEF4070	
	SSS	SCL4070	
	Solitron	CM4070	
MM74C89	Fairchild	F40089	
MM74C920	Intersil	IM6551	
	NEC	μPD5101	
MM74C929	AMI	S6508	
	Fairchild	4736B	
	Harris	**HM6508**	**3965**
	Intel	2125A	
		(Continued)	

Manufacturer Device	Replacement Source	Device	IC Master Page
MM74C929	Motorola	MCM2125	
	National	NMC6508	
	NEC	μPD443	
	SSS	SCM21C02	
	Toshiba	TC5508	
MM74C930	**Harris**	**HM6518**	**3965**
	Intersil	IM6518-1	
MM74HC00	Motorola	MC74HC00	
	RCA	CD74HC00	
	SPI	**SP74HC00**	**848**
	Signetics	PCF74HC00	
	Toshiba	TC40H000	
MM74HC02	Motorola	MC74HC02	
	RCA	CD74HC02	
	SPI	**SP74HC02**	**848**
	Signetics	PCF74HC02	
	Toshiba	TC40H002	
MM74HC04	Motorola	MC74HC04	
	RCA	CD74HC04	
	SPI	**SP74HC04**	**848**
	Toshiba	TC40H004	
MM74HC08	Motorola	MC74HC08	
	RCA	CD74HC08	
	SPI	**SP74HC08**	**848**
	Signetics	PCF74HC08	
MM74HC10	Motorola	MC74HC10	
	RCA	CD74HC10	
	SPI	**SP74HC10**	**848**
	Signetics	PCF74HC10	
	SiliconG	SG75474	
	Toshiba	TC40H010	
MM74HC107	Motorola	MC74HC107	
	RCA	CD74HC107	
	SPI	**SP74HC107**	**848**
	Signetics	PCF74HC107	
	Toshiba	TC40H107	
MM74HC109	Motorola	MC74HC109	
	RCA	CD74HC109	
	SPI	**SP74HC109**	**848**
	Signetics	PCF74HC109	
MM74HC11	Motorola	MC74HC11	
	RCA	CD74HC11	
	SPI	**SP74HC11**	**848**
	Signetics	PCF74HC11	
	Toshiba	TC40H011	
MM74HC112	Motorola	MC74HC112	
	RCA	CD74HC112	
	SPI	SP74HC112N	
	Signetics	PCF74HC112	
MM74HC123	Motorola	MC74HC123	
	RCA	CD74HC123	
	Signetics	PCF74HC123	
MM74HC132	Motorola	MC74HC132	
	RCA	CD74HC132	
	SPI	**SP74HC132**	**848**
	Signetics	PCF74HC132	
MM74HC133	Motorola	MC74HC133	
	RCA	CD74HC133	
	SPI	**SP74HC133**	**848**
	Signetics	PCF74HC133	
MM74HC138	Motorola	MC74HC138	
	RCA	CD74HC138	
	SPI	**SP74HC138**	**848**
	Signetics	PCF74HC138	
MM74HC139	Motorola	MC74HC139	
	RCA	CD74HC139	
	SPI	**SP74HC139**	**848**
	Signetics	PCF74HC139	
	Toshiba	TC40H139	
MM74HC14	Motorola	MC74HC14	
	RCA	CD74HC14	
	SPI	**SP74HC14**	**848**
	Signetics	PCF74HC14	
MM74HC147	Motorola	MC74HC147	
	RCA	CD74HC147	
	SPI	**SP74HC147**	**848**
	Signetics	PCF74HC147	
MM74HC151	Motorola	MC74HC151	
	RCA	CD74HC151	
	SPI	**SP74HC151**	**848**
	Signetics	PCF74HC151	
MM74HC153	Motorola	MC74HC153	
	RCA	CD74HC153	
	SPI	**SP74HC153**	**848**
	Signetics	PCF74HC153	
	Toshiba	TC40H153	
MM74HC154	Motorola	MC74HC154	
	RCA	CD74HC154	
	Signetics	PCF74HC154	
MM74HC157	Motorola	MC74HC157	
	RCA	CD74HC157	
	SPI	**SP74HC157**	**848**
		(Continued)	

◆ Discontinued

Bold face device numbers indicate manufacturers data is provided in the IC Master on the pages noted.

© IC MASTER 1984

National Semiconductor (Cont'd)

Manufacturer Device	Replacement Source	Device	IC Master Page
MM74HC157	Signetics	PCF74HC157	
	Toshiba	TC40H157	
MM74HC158	Motorola	MC74HC158	
	RCA	CD74HC158	
	SPI	**SP74HC158**	**848**
	Signetics	PCF74HC158	
	Toshiba	TC40H158	
MM74HC160	Motorola	MC74HC160	
	RCA	CD74HC160	
	SPI	**SP74HC160**	**848**
	Signetics	PCF74HC160	
MM74HC161	Motorola	MC74HC161	
	RCA	CD74HC161	
	SPI	**SP74HC161**	**848**
	Signetics	PCF74HC161	
MM74HC162	Motorola	MC74HC162	
	RCA	CD74HC162	
	SPI	**SP74HC162**	**848**
	Signetics	PCF74HC162	
MM74HC163	Motorola	MC74HC163	
	RCA	CD74HC163	
	SPI	**SP74HC163**	**848**
	Signetics	PCF74HC163	
MM74HC164	Motorola	MC74HC164	
	RCA	CD74HC164	
	SPI	SP74HC164	
	Signetics	PCF74HC164	
MM74HC165	Motorola	MC74HC165	
	RCA	CD74HC165	
	SPI	SP74HC165	
	Signetics	PCF74HC165	
MM74HC173	Motorola	MC74HC173	
	RCA	CD74HC173	
	SPI	**SP74HC173**	**848**
	Signetics	PCF74HC173	
MM74HC174	Motorola	MC74HC174	
	RCA	CD74HC174	
	SPI	**SP74HC174**	**848**
	Signetics	PCF74HC174	
	Toshiba	TC40H174	
MM74HC175	Motorola	MC74HC175	
	RCA	CD74HC175	
	SPI	**SP74HC175**	**848**
	Signetics	PCF74HC175	
	Toshiba	TC40H175	
MM74HC192	Motorola	MC74HC192	
	RCA	CD74HC192	
	SPI	**SP74HC192**	**848**
	Signetics	PCF74HC192	
	Toshiba	TC40H192	
MM74HC193	Motorola	MC74HC193	
	RCA	CD74HC193	
	SPI	**SP74HC193**	**848**
	Signetics	PCF74HC193	
	Toshiba	TC40H193	
MM74HC194	Motorola	MC74HC194	
	RCA	CD74HC194	
	SPI	SP74HC194	
	Signetics	PCF74HC194	
MM74HC195	Motorola	MC74HC195	
	RCA	CD74HC195	
	SPI	SP74HC195	
	Signetics	PCF74HC195	
MM74HC20	Motorola	MC74HC20	
	RCA	CD74HC20	
	SPI	**SP74HC20**	**848**
	Signetics	PCF74HC20	
	Toshiba	TC40H020	
MM74HC221	Motorola	MC74HC221	
	RCA	CD74HC221	
	Signetics	PCF74HC221	
MM74HC240	Motorola	MC74HC240	
	RCA	CD74HC240	
	SPI	**SP74HC240**	**848**
	Signetics	PCF74HC240	
	Toshiba	TC40H240	
MM74HC241	Motorola	MC74HC241	
	RCA	CD74HC241	
	SPI	**SP74HC241**	**848**
	Signetics	PCF74HC241	
MM74HC242	Motorola	MC74HC242	
	RCA	CD74HC242	
		SGN	
	SPI	SP74HC242	
	Signetics	PCF74HC242	
MM74HC243	Motorola	MC74HC243	
	RCA	CD74HC243	
	Signetics	PCF74HC243	
MM74HC244	Motorola	MC74HC244	
	RCA	CD74HC244	
	Signetics	PCF74HC244	
MM74HC245	Motorola	MC74HC245	
	RCA	CD74HC245	
	Signetics	PCF74HC245	
MM74HC251	Motorola	MC74HC251	
	RCA	CD74HC251	
	SPI	**SP74HC251**	**848**
	Signetics	PCF74HC251	
MM74HC253	Motorola	MC74HC253	
	RCA	CD74HC253	
	SPI	**SP74HC253**	**848**
	Signetics	PCF74HC253	
MM74HC257	Motorola	MC74HC257	
	RCA	CD74HC257	
	SPI	**SP74HC257**	**848**
	Signetics	PCF74HC257	
MM74HC259	Motorola	MC74HC259	
	RCA	CD74HC259	
	Signetics	PCF74HC259	
MM74HC266	Motorola	MC74HC266	
	RCA	CD74HC266	
	SPI	**SP74HC266**	**848**
	Signetics	PCF74HC266	
MM74HC27	Motorola	MC74HC27	
	RCA	CD74HC27	
	SPI	**SP74HC27**	**848**
	Signetics	PCF74HC27	
	Toshiba	TC40H027	
MM74HC280	Motorola	MC74HC280	
	RCA	CD74HC280	
	SPI	**SP74HC280**	**848**
	Signetics	PCF74HC280	
MM74HC299	Motorola	MC74HC299	
	RCA	CD74HC299	
	Signetics	PCF74HC299	
MM74HC30	Motorola	MC74HC30	
	RCA	CD74HC30	
	SPI	**SP74HC30**	**848**
	Signetics	PCF74HC30	
MM74HC32	Motorola	MC74HC32	
	RCA	CD74HC32	
	SPI	**SP74HC32**	**848**
	Signetics	PCF74HC32	
	Toshiba	TC40H032	
MM74HC354	Motorola	MC74HC354	
	RCA	CD74HC354	
	Signetics	PCF74HC354	
MM74HC356	Motorola	MC74HC356	
	RCA	CD74HC356	
	Signetics	PCF74HC356	
MM74HC365	Motorola	MC74HC365	
	RCA	CD74HC365	
	SPI	**SP74HC365**	**848**
MM74HC366	Motorola	MC74HC366	
	RCA	CD74HC366	
	Signetics	PCF74HC366	
MM74HC367	Motorola	MC74HC367	
	RCA	CD74HC367	
	SPI	SP74HC367	
	Signetics	PCF74HC367	
MM74HC368	Motorola	MC74HC368	
	RCA	CD74HC368	
	Signetics	PCF74HC368	
MM74HC373	Motorola	MC74HC373	
	RCA	CD74HC373	
	SPI	**SP74HC373**	**848**
	Signetics	PCF74HC373	
MM74HC374	Motorola	MC74HC374	
	RCA	CD74HC374	
	SPI	**SP74HC374**	**848**
	Signetics	PCF74HC374	
MM74HC390	Motorola	MC74HC390	
	RCA	**CD74HC390**	**843**
	Signetics	PCF74HC390	
MM74HC393	Motorola	MC74HC393	
	RCA	**CD74HC393**	**843**
	SPI	**SP74HC393**	**848**
	Signetics	PCF74HC393	
MM74HC4002	Motorola	MC74HC4002	
	RCA	**CD74HC4002**	**843**
	SPI	SP74HC4002	
	Signetics	PCF74HC4002	
MM74HC4017	Motorola	MC74HC4017	
	RCA	**CD74HC4017**	**843**
	SPI	**SP74HC4017**	**848**
	Signetics	PCF74HC4017	
MM74HC4020	Motorola	MC74HC4020	
	RCA	**CD74HC4020**	**843**
	SPI	**SP74HC4020**	**848**
	Signetics	PCF74HC4020	
MM74HC4040	Motorola	MC74HC4040	
	RCA	**CD74HC4040**	**843**
	Signetics	PCF74HC4040	
MM74HC4049	Motorola	MC74HC4049	
	RCA	**CD74HC4049**	**843**
	Signetics	PCF74HC4049	
MM74HC4050	Motorola	MC74HC4050	
	RCA	**CD74HC4050**	**843**
	Signetics	PCF74HC4050	
MM74HC4060	Motorola	MC74HC4060	
	RCA	**CD74HC4060**	**843**
	Signetics	PCF74HC4060	
MM74HC4075	Motorola	MC74HC4075	
MM74HC4078	Motorola	MC74HC4078	
MM74HC42	Motorola	MC74HC42	
	RCA	CD74HC42	
	SPI	**SP74HC42**	**848**
	Signetics	PCF74HC42	
MM74HC4511	Motorola	MC74HC4511	
	RCA	**CD74HC4511**	**843**
	Signetics	PCF74HC4511	
MM74HC4514	Motorola	MC74HC4514	
	RCA	**CD74HC4514**	**843**
	Signetics	PCF74HC4514	
MM74HC4538	Motorola	MC74HC4538	
	RCA	**CD74HC4538**	**843**
	Signetics	PCF74HC4538	
MM74HC533	Motorola	MC74HC533	
	RCA	**CD74HC533**	**843**
	SPI	**SP74HC533**	**848**
	Signetics	PCF74HC533	
MM74HC534	Motorola	MC74HC534	
	RCA	**CD74HC534**	**843**
	SPI	SP74HC534	
	Signetics	PCF74HC534	
MM74HC563	Motorola	MC74HC563	
	RCA	**CD74HC563**	**843**
	Signetics	PCF74HC563	
MM74HC564	Motorola	MC74HC564	
	RCA	**CD74HC564**	**843**
	Signetics	PCF74HC564	
MM74HC573	Motorola	MC74HC573	
	RCA	**CD74HC573**	**843**
	SPI	**SP74HC573**	**848**
	Signetics	PCF74HC573	
MM74HC574	Motorola	MC74HC574	
	RCA	**CD74HC574**	**843**
	SPI	**SP74HC574**	**848**
	Signetics	PCF74HC574	
MM74HC640	Motorola	MC74HC640	
	RCA	**CD74HC640**	**843**
	Signetics	PCF74HC640	
MM74HC643	Motorola	MC74HC643	
	RCA	**CD74HC643**	**843**
	Signetics	PCF74HC643	
MM74HC645	Motorola	MC74HC645	
	RCA	CD74HC645	
	Signetics	PCF74HC645	
MM74HC646	Motorola	MC74HC646	
	RCA	**CD74HC646**	**843**
	Signetics	PCF74HC646	
MM74HC648	Motorola	MC74HC648	
	RCA	**CD74HC648**	**843**
	Signetics	PCF74HC648	
MM74HC688	Motorola	MC74HC688	
	RCA	**CD74HC688**	**843**
	Signetics	PCF74HC688	
MM74HC73	Motorola	MC74HC73	
	RCA	CD74HC73	
	SPI	**SP74HC73**	**848**
	Signetics	PCF74HC73	
MM74HC74	Motorola	MC74HC74	
	RCA	CD74HC74	
	SPI	**SP74HC74**	**848**
	Signetics	PCF74HC74	
	Toshiba	TC40H074	
MM74HC75	Motorola	MC74HC75	
	RCA	CD74HC75	
	SPI	**SP74HC75**	**848**
	Signetics	PCF74HC75	
MM74HC76	Motorola	MC74HC76	
	RCA	CD74HC76	
	SPI	**SP74HC76**	**848**
	Signetics	PCF74HC76	
	Toshiba	TC40H076	
MM74HC85	Motorola	MC74HC85	
	RCA	CD74HC85	
	SPI	SP74HC85	
	Signetics	PCF74HC85	
MM74HC86	Motorola	MC74HC86	
	RCA	CD74HC86	
		(Continued)	
MM74HC86	SPI	SP74HC86N	
	Signetics	PCF74HC86	
MM74S289	Fairchild	7489	
	Hitachi	HD7489	
		HD74S289	
	National	DM7489	
		DM74S289	
		DM8589	
	Signetics	74S289	
		N82S25	
	TI	SN74S289	
MM80C97	Fairchild	F40097	
	Hitachi	HD14503	
	Motorola	MC14503	
	National	CD4503	
	RCA	CD4503	
	Signetics	HEF40097	
~~MM80C98~~	~~Fairchild~~	~~F40098~~	
	Signetics	HEF40098	
MM8629	Plessey	SP8629	
N82S117	AMD	AM27LS01	
		AM29720	
	Fairchild	93411	
		93L411	
	Intel	3107	
	National	DM74S206	
		N82S17	
	Signetics	74S301	
		N82S17	
	TI	SN74206	
		SN74S301	**1016**
N82S17	AMD	AM27LS01	
		AM29720	
	Fairchild	93411	
		93L411	
	Intel	3107	
	National	DM74S206	
		N82S117	
	Signetics	74S301	
		N82S17	
	TI	SN74206	
		SN74S301	**1016**
NMC2116	**AMD**	**AM9128**	**3917**
	Fairchild	F3528	
	Fujitsu	MB8128	
	Intel	2128	
	Motorola	MCM2016	
	OKI	**MSM5128**	**4118**
	Synertek	SY2128	
		SY2129	
	TI	TMS4016	
	Toshiba	TMM2016	
NMC2142A	Intel	2142-2	
NMC2148	AMD	AM2148	
	Fairchild	93475	
	Fujitsu	MBM2148	
		MBM2149	
	Hitachi	HM6148	
	Intel	2148H	
		2149H	
	Synertek	SY2148	
		SY2149	
NMC2532	Hitachi	HN462532	
	Motorola	MCM2532	
	National	MM2532	
		TDA2530	
		TDA2532	
	Plessey	TDA2530	
	Siemens	TDA2530	
	SiliconG	SG2532	
	TI	TMS2532	
	Universal	UM2532	
NMC2564	GTEMicro	G5365	
	TI	TMS2564	
	VTI	**VT2366**	**4251**
NMC2732	AMD	AM2732	
	Hitachi	HN462732	
	Intel	2732	
		2732A	
		M2732	
	Mitsubishi	M5L2732	
	National	MM2732	
	NEC	μPD2732	
	Toshiba	TMM2732	
		TMM324C	
	Universal	UM2732	
NMC2764	AMD	AM2764	
	Fujitsu	MBM2764	
	Hitachi	HN482764	
	Intel	2764	
		M2764	
	Intersil	IM2764	
		(Continued)	

◆ Discontinued

The manufacturers report their devices can be used as direct replacements.
Performance details often differ, so compare the specifications considering your requirements.

National Semiconductor (Cont'd)

Manufacturer Device	Replacement Source	Device	IC Master Page
NMC2764	Mitel	M5L2764	
	Mitsubishi	M5L2764	
	Mostek	MK2764	
	NEC	μPD2764	
	SEEQ	5133	
	Toshiba	TMM2764	
NMC2816	Hitachi	HN48016	
	Intel	2816	
	NCR	NCR2161	
	Rockwell	5213	
		52B13	
	SEEQ	5213	
		52B13	
	Xicor	**X2816A**	
		547,4267,4268	
NMC4164	Fairchild	F4164	
		F64K	
	Fujitsu	MB8264	
		MB8266	
	Hitachi	HM4864	
	IMS	IMS2600	
	Intel	2164	
	Motorola	MCM6665	
	NEC	μPD4164	
	OKI	MSM3764	
	TI	TMS4164	
	~~Toshiba~~	~~TMM4164~~	
NMC5257A	AMD	AM9044	
NMC5295	Hitachi	HM4816	
		HM4816A	
	Intel	2118	
	Intersil	IM7118	
	Mostek	MK4516	
	NEC	μPD2118	
	TI	TMS4516	
NMC6132	Zilog	Z6132	
NMC6503	Harris	HM6503	
NMC6504	Fujitsu	MB8404	
	Harris	HM6504	
	Intersil	IM6504	
	MicroPwr	MP6504	
	RCA	CDM5104	
	SMOS	SRM6504	
	Toshiba	TC5504	
NMC6508	AMI	S6508	
	Fairchild	4736B	
	Harris	**HM6508**	**3965**
	Intel	2125A	
	Motorola	MCM2125	
	National	MM74C929	
	NEC	μPD443	
	SSS	SCM21C02	
	Toshiba	TC5508	
NMC6514	Fujitsu	MB8414	
	Harris	HM6514	
	Hitachi	HM4334	
	Intersil	IM6514	
	MicroPwr	MP6514	
	Mitsubishi	M58981	
	NEC	μPD6514	
	OKI	**MSM5115**	**4118**
	RCA	MWS5514	
	SMOS	SRM6514	
	Toshiba	TC5514	
NS16008	**Fairchild**	**F16008**	**1470**
NS16016	**Fairchild**	**F16016**	**1470**
NS16032	**Fairchild**	**F16032**	**1470**
NS16081	**Fairchild**	**F16081**	**1470**
NS16082	**Fairchild**	**F16082**	**1470**
NS16105	**Fairchild**	**F16105**	**1470**
NS16201	**Fairchild**	**F16201**	**1470**
NS16202	**Fairchild**	**F16202**	**1470**
NS16203	**Fairchild**	**F16203**	**1470**
NS16413	**Fairchild**	**F16413**	**1470**
NS16425	**Fairchild**	**F16425**	**1470**
NS16456	**Fairchild**	**F16456**	**1470**
NS16488	**Fairchild**	**F16488**	**1470**
NS16802	Fairchild	F16802	
NS80CX48	Intel	8748	
	NEC	μPD8748	
NSC800	SMC	MPU800	
NSC810	SMC	MPU810	
NSC830	SMC	MPU830	
~~NSC831~~	~~SMC~~	~~MPU831~~	
S2128	AMD	AM92128	
	AMI	**S23128**	**3935**
	GI	R09128	
	~~Hitachi~~	~~HN613128~~	
	Motorola	MCM63128	
		(Continued)	

Manufacturer Device	Replacement Source	Device	IC Master Page
S2128	NCR	NCR23128	
	NEC	μPD2/83128	
		μPD23/83128	
	OKI	**MSM38128**	**4118**
	Signetics	**23128-30**	**4202**
	Synertek	SY23128	
	VTI	**VT23128**	**4252**
S82S117	National	S82S17	
	Signetics	S82S17	
	TI	SN54S301	
S82S17	National	S82S117	
	Signetics	S82S17	
	TI	SN54S301	
SG75464	Motorola	MC75404	
		MC75464	
	National	DS75464	
	SiliconG	SG75464	
	TI	SN75464	
SM54251	National	DM54251	
		DM7121	
	TI	**SN54251**	**1003**
SN54ALS30	National	DM54ALS30	
SN54ALS353	National	DM54ALS353	
TBA120	Plessey	TBA120	
	Siemens	TBA120	
	Signetics	TBA120	
	Telefunken	TBA120	
TBA440	Plessey	TBA440	
	Siemens	TBA440	
~~TBA530~~	~~Plessey~~	~~TBA530~~	
	Telefunken	TBA530	
TBA540	Plessey	TBA540	
	Signetics	TBA540	
	Telefunken	TBA540	
TBA560	Plessey	TBA560	
	Telefunken	TBA560	
TBA920	Plessey	TBA920	
TBA950	ITT	TBA950	
	Plessey	TBA950	
TBA990	Plessey	TBA990	
	Telefunken	TBA990	
TDA2522	Plessey	TDA2522	
	Siemens	TDA2522	
TDA2523	Plessey	TDA2523	
TDA2530	Hitachi	HN462532	
	Motorola	MCM2532	
	National	MM2532	
		NMC2532	
		TDA2532	
	Plessey	TDA2530	
	Siemens	TDA2530	
	SiliconG	SG2532	
	TI	TMS2532	
	Universal	UM2532	
TDA2532	Hitachi	HN462532	
	Motorola	MCM2532	
	National	MM2532	
		NMC2532	
		TDA2530	
	Plessey	TDA2530	
	Siemens	TDA2530	
	SiliconG	SG2532	
	TI	TMS2532	
	Universal	UM2532	
TDA2540	Plessey	TDA2540	
	Signetics	TDA2540	
TDA2541	Plessey	TDA2541	
	Signetics	TDA2541	
TDA2560	Plessey	TDA2560	
	Siemens	TDA2560	
	Signetics	TDA2560	
TDA2591	Plessey	TDA2591	
	Telefunken	TDA2591	
TDA2593	Plessey	TDA2593	
	Signetics	TDA2593	
	Telefunken	TDA2593	
TDA440	Plessey	TDA440	
	SGS	TDA440	
	Telefunken	TDA440	
TP3020	Intel	ID2910	
TP3021	Intel	ID2911	
TP3040	GTEMicro	G8912	
	Intel	2912	
		ID2912	
	~~Mostek~~	~~MK5912~~	
		MK8912	
	Plessey	MV8912	
	TI	TCM2912	
		TCM2912B	
TP5087	AMI	S2859	
	GI	AY5-9559	
	Mitel	MT5087	
		(Continued)	

Manufacturer Device	Replacement Source	Device	IC Master Page
TP5087	Mostek	MK5087	
	Plessey	MV5087	
	TI	TCM5087	
TP5089	**AMI**	**S25089**	**3340**
	Mitel	MT5089	
	Mostek	MK5089	
	Plessey	MV5089	
	TI	TCM5089	
TP5092	Mitel	MT5092	
	Mostek	MK5092	
	TI	TCM5092	
TP5094	Mostek	MK5094	
TP50981	Mostek	MK50981	
TP50982	Mostek	MK50982	
TP5116	Fairchild	5116	
	Mostek	MK5116	
	SGS	M5116	
TP5156	Fairchild	5156	
	Mostek	MK5156	
	SGS	M5156	

NCR Corp., Microelectronics Div.

Manufacturer Device	Replacement Source	Device	IC Master Page
2316	AMD	AM9218	
	Fairchild	3516	
		68316	
		F3516	
		F35316	
		F68316	**1464**
	GI	R03-9316	
	GTEMicro	2316	
	Intel	2316	
	Mostek	MK34000	
	Motorola	MCM68316	
		MCM68A316	
		MM2316	
	National	MM52116	
		MM5258	
	NCR	NCR2316	
	NEC	μPD2316	
	OKI	**MSM2916**	**4118**
	Rockwell	R2316	
	SGS	M2316	
	TI	SBP8316	
	Toshiba	TMM331A	
		TMM334	
23256	AMD	AM92256	
	Fujitsu	MB83256	
	GI	R09256	
	Hitachi	HN613256	
	MicroPwr	MP2326	
	Mostek	MK38000	
	Motorola	MCM63256	
	NEC	μPD2/83256	
		μPD23/83256	
	SMOS	SMM2326	
	Signetics	23256	
	Synertek	SY23256	
	Toshiba	TMM23256	
2332	AMD	AM9232	
	AMI	S68322	
		S68A332	
	Fairchild	F3532	
	GI	R094132	
		T094132	
	GTEMicro	2332	
	Hitachi	HN46332	
	Intersil	IM7332	
	Motorola	MC68332	
		MCM68332	
		MCM68A332	**4048**
	National	MM52132	
	NCR	NCR2332	
	NEC	**μPD2332**	**4100**
	OKI	**MSM2932**	**4118**
	RCA	**CDM5333**	**1593**
	Rockwell	R2332	
	SiliconG	SG3532	
	SSS	SCM23C32	
	SMC	ROM4732	
	Synertek	**SY2332**	**4211**
	TI	**TMS4732**	**4226**
	Toshiba	TM2332	
		TMM333	
	Universal	UM2332	
	VTI	**VT2332**	**4249**
2333	AMD	AM9233	
	AMI	**S2333**	**3932**
	Fairchild	F3533	
	GI	R09433	
	Intel	2332	
		(Continued)	

Manufacturer Device	Replacement Source	Device	IC Master Page
2333	NCR	NCR2333	
	RCA	**CDM5332**	**1593**
	Signetics	2332	
	SSS	SCM23C33	
	Synertek	**SY2333**	**4211**
	Universal	UM2333-45	
	VTI	**VT2333**	**4249**
2364	AMD	AM9264	
	AMI	S4264	
		S68A364	**3933**
	GTEMicro	2364-3	
	Hitachi	HN48364	
	Mostek	MK36000-5	
	Motorola	MCM68365	
		MCM68366	
	National	MM52164	
	NEC	UPD2/8364-30	
		μPD23/8364-30	
	OKI	MSM2965	
	Signetics	2664A-30	
	Synertek	**SY2364-3**	**4211**
	Toshiba	TMM2364	
	Weitek	SC8164	
2365	NEC	μPD2364	
	Rockwell	R2364	
	Signetics	2364	
	Synertek	**SY2365**	**4211**
	VTI	**VT2365**	**4251**
NCR1400	GI	ER1400	
	Mitsubishi	M5G1400	
	Nitron	NC1400	
NCR2051	GI	ER2051	
	Nitron	NC7051	
NCR2055	Nitron	NC7055	
NCR2161	Hitachi	HN48016	
	Intel	2816	
	National	NMC2816	
	Rockwell	5213	
		52B13	
	SEEQ	5213	
		52B13	
	Xicor	**X2816A**	
		547,4267,4268	
NCR2168	Hitachi	HN48016	
	Motorola	MCM2816	
NCR23128	AMD	AM92128	
	AMI	**S23128**	**3935**
	GI	R09128	
	Hitachi	HN613128	
	Motorola	MCM63128	
	National	S2128	
	NEC	μPD2/83128	
		μPD23/83128	
	OKI	**MSM38128**	**4118**
	Signetics	**23128-30**	**4202**
	Synertek	SY23128	
	VTI	**VT23128**	**4252**
NCR2316	AMD	AM9218	
	Fairchild	3516	
		68316	
		F3516	
		F35316	
		F68316	**1464**
	GI	R03-9316	
	GTEMicro	2316	
	Intel	2316	
	Mostek	MK34000	
	Motorola	MCM68316	
		MCM68A316	
		MM2316	
	National	MM52116	
		MM5258	
	NCR	2316	
	NEC	μPD2316	
	OKI	**MSM2916**	**4118**
	Rockwell	R2316	
	SGS	M2316	
	TI	SBP8316	
	Toshiba	TMM331A	
		TMM334	
NCR2332	AMD	AM9232	
	AMI	S68322	
		S68A332	
	Fairchild	F3532	
	GI	R094132	
		T094132	
	GTEMicro	2332	
	Hitachi	HN46332	
	Intersil	IM7332	
	Motorola	MC68332	
		MCM68332	
		MCM68A332	**4048**
		(Continued)	

‡ Discontinued

Bold face device numbers indicate manufacturers data is provided in the IC Master on the pages noted.

© IC MASTER 1984

NCR Corp., Microelectronics Div. (Cont'd)

Manufacturer Device	Replacement Source	Device	IC Master Page
NCR2332	National	MM52132	
	NCR	2332	
	NEC	**μPD2332**	**4100**
	OKI	**MSM2932**	**4118**
	RCA	**CDM5333**	**1593**
	Rockwell	R2332	
	SiliconG	SG3532	
	SSS	SCM23C32	
	SMC	ROM4732	
	Synertek	**SY2332**	**4211**
	TI	**TMS4732**	**4226**
	Toshiba	TM2332	
		TMM333	
	Universal	UM2332	
	VTI	**VT2332**	**4249**
NCR2333	AMD	AM9233	
	AMI	**S2333**	**3932**
	Fairchild	F3533	
	GI	R09433	
	Intel	2332	
	NCR	2333	
	RCA	**CDM5332**	**1593**
	Signetics	2332	
	SSS	SCM23C33	
	Synertek	**SY2333**	**4211**
	Universal	UM2333-45	
	VTI	**VT2333**	**4249**
NCR2364	AMI	S68364	
	GI	R09464	
	GTEMicro	G5364	
	Intersil	IM7364	
	MicroPwr	MP2364	
	Mitsubishi	M5L2364	
	Mostek	MK36000	
	Motorola	**MCM68364**	**4048,4054**
	National	MM5235	
	RCA	**CDM5364**	**1593**
	SMOS	SMM2364	
	SGS	M36000	
	Signetics	2664A	
	SSS	SCM23C64	
		SCM23C65	
	SMC	ROM36000	
	Synertek	**SY2364**	**4211**
	TI	**TMS4764**	**4225**
	Toshiba	TM2364	
	VTI	**VT2364**	**4250**
NCR23C64	SSS	SCM23C64	
NCR3400	GI	ER3400	
	Hughes	HNVM3704	
	Nitron	NC7451	
NCR52001	NCR	S2001	
	Xicor	X2001	
NCR52002	NCR	S2002	
	Xicor	X2002	
NCR52004	Xicor	X2004	
NCR52210	**Xicor**	**X2210**	**4266**
NCR52211	Xicor	X2211	
NCR52212	**Xicor**	**X2212**	**547,4266**
NCR52801	Motorola	MCM2801	
NCR7033	Nitron	NC7033	
S2001	NCR	NCR52001	
	Xicor	X2001	
S2002	NCR	NCR52002	
	Xicor	X2002	

NEC Electronics

Manufacturer Device	Replacement Source	Device	IC Master Page
TL494	NEC	μPD494	
UPD2/8364-30	AMD	AM9264	
	AMI	S4264	
		S68A364	**3933**
	GTEMicro	2364-3	
	Hitachi	HN48364	
	Mostek	MK36000-5	
	Motorola	MCM68365	
		MCM68366	
	National	MM52164	
	NCR	2364	
	NEC	μPD23/8364-30	
	OKI	MSM2965	
	Signetics	2664A-30	
	Synertek	**SY2364-3**	**4211**
	Toshiba	TMM2364	
	Weitek	SC8164	
μPA2001	Exar	XR2001	
		XR2201	
	Fairchild	9665	

(Continued)

Manufacturer Device	Replacement Source	Device	IC Master Page
μPA2001	**Motorola**	**MC1411**	**3064**
		ULN2001	
		XR2201	
	RIFA	PBD352301	
	Sanyo	LB1231	
	SGS	L201	
	SiliconG	SG2001	
	Sprague	ULN-2001	
		ULN-2021	
		ULQ-2002	
		ULS-2001	
	TI	ULN2001	
	Toshiba	TD62001	
μPA2002	Exar	XR2002	
		XR2202	
	Fairchild	9666	
		MC1412	
	Motorola	**MC1412**	**3064**
		ULN2002	
	RIFA	PBD352304	
	Sanyo	LB1232	
	SGS	L202	
	Signetics	NE5602	
	Sprague	ULN-2002	
		ULQ-2003	
	TI	ULN2002	
	Toshiba	TD62002	
μPB10142	TI	SN10102	
μPB10148	Hitachi	HD10148	
	Motorola	**MCM10148**	**4046**
	Signetics	10148	
	TI	SN10148	
μPB10161	Fairchild	F10161	
	Hitachi	HD10161	
	Motorola	MC10161	
	Signetics	**10161**	**858**
μPB2089	AMD	31L01	
		AM27LS02	
		AM27S02	
		AM3101	
		AM3101A	
		SN7489-1	
	Fairchild	74S289	
	Intel	3101	
	Motorola	MC4064	
	National	DM7589	
	NEC	μPB2289	
	Signetics	3101	
		3101A	
		7489	
		N8225	
		S3101	
	TI	**SN7489**	**951**
μPB2200	AMD	AM27LS00	
	Fairchild	93421	
		93L420	
		93L421	
	Intel	3106	
	Motorola	MC4256	
	National	93L420	
		93L421	
		DM74S200	
	Signetics	74200	
		N82S116	
		N82S16	
	TI	SN74LS200	
		SN74S200	
		SN74S201	**993**
μPB2289	AMD	31L01	
		AM27LS02	
		AM27S02	
		AM3101	
		AM3101A	
		SN7489-1	
	Fairchild	74S289	
	Intel	3101	
	Motorola	MC4064	
	National	DM7589	
	NEC	μPB2089	
	Signetics	3101	
		3101A	
		7489	
		N8225	
		S3101	
	TI	**SN7489**	**951**
μPB406	AMD	AM27S32	
	Fairchild	93452	
	Fujitsu	MB7121	
	Harris	HM7642	
	Hitachi	HN25044	
	MMI	6352-1	
	Motorola	MCM7642	

(Continued)

Manufacturer Device	Replacement Source	Device	IC Master Page
μPB406	**National**	**DM74S572**	**4057**
	Signetics	N82S136	
	TI	**TBP24SA41**	**4239**
μPB408	AMD	AM27S180	
		AM27S280	
	Fairchild	93450	
		93Z450	
	Fujitsu	MB7131	
	Hitachi	HN25088	
	Intel	3608	
	MMI	6380-1	
	National	**DM87S180**	**4057**
		DM87S229	
	Signetics	N82S180	
	TI	TBP28SA86	
μPB409	AMD	AM27S190	
	Fairchild	93510	
		93Z510	
	Fujitsu	MB7137	
		MB7137E-W	
	Harris	HM76160	
	Hitachi	HN25168	
	MMI	**63S1681**	**4026**
	Motorola	MCM6160	
	National	**DM87S190**	**4057**
	Raytheon	**29683**	**4131**
	Signetics	N82S190	
	TI	TBP28SA166	
μPB417	AMD	AM27PS181	
		AM27S181	
		AM27S281	
	Fairchild	93Z451	
		F93451	
	Fujitsu	MB7132	
	Harris	HM7681	
	Hitachi	HN25089	
	Intel	3628	
		3628A	
		3628B	
	MMI	6381-1	
	Motorola	**MCM7681**	**4047**
	National	**DM87S181**	**4057**
		DM87S228	
	Raytheon	29631	
		29631A	**4131**
		29633	
	Signetics	825181	
		N82HS181	
		N82S181	
	Supertex	SM82S181	
	TI	TBP28S86	
μPB426	AMD	AM27PS185	
	Fujitsu	MB7134	
		MB7152	
	Harris	HM76165	
	MMI	**63S441**	**4026**
	Motorola	**MCM76165**	**4047**
	Raytheon	29653	
	Signetics	N82HS195	
		N82S195	**4182**
μPB429	AMD	AM27PS191	
		AM27S191	
	Fairchild	93511	
		93Z511	
	Fujitsu	MB7138	
		MB7138E-W	
	Harris	HM76161	
	Hitachi	HN25169	
	MMI	**63S1681**	**4026**
	Motorola	**MCM76161**	**4047**
	National	**DM87S191**	**4057**
	Raytheon	**29681**	**4131**
		29681A	**4131**
	Signetics	N82S191	
	TI	**TBP28S166**	**4247**
μPB74LS05	Fairchild	74LS05	
	Hitachi	HD74LS05	
	Motorola	SN74LS05	
	National	DM74LS05	
	SGS	T74LS05	
	Signetics	74LS05	
	TI	**SN74LS05**	**921**
μPB74LS161	Fairchild	74LS161A	
	Hitachi	HD74LS161A	
	Motorola	SN74LS161A	
	National	DM74LS161	
	SGS	T74LS161	
	Signetics	74LS161A	
	TI	**SN74LS161A**	**977**
μPB8212	AMD	8212	
		AM3212	
	National	DP8212	

(Continued)

Manufacturer Device	Replacement Source	Device	IC Master Page
μPB8212	National	INS8212	
	TI	**SN74S412**	**1033**
μPB8214	AMD	8214	
	Intel	8214	
	National	INS8214	
μPB8216	Intel	8216	
	National	DP8216	
		INS8216	
μPB8224	AMD	8224	
	Intel	8224	
	National	DP8224	
		INS8224	
μPB8226	Intel	8226	
	National	DP8226	
		INS8226	
μPB8228	AMD	8228	
	Intel	8228	
	National	DP8228	
		INS8228	
	TI	**SN74S428**	**1034**
		TIM8228	
μPB8237-5	Intel	8237-5	
μPB8238	AMD	8238	
	Intel	8238	
	National	DP8238	
		INS8238	
	TI	**SN74S438**	**1034**
		TIM8238	
μPB8251	AMD	8251	
		AM9551	**1436**
	Intel	8251A	
	National	DP8251	
		INS8251	
	SMC	COM8251A	
	Western	TR1983	
μPB8282	Fujitsu	MBL8282	
	Intel	8282	
μPB8283	AMD	AM8282	
		AM8283	
	Fujitsu	MBL8283	
	Intel	8283	
μPB8284	AMD	8284	
	Fujitsu	MBL8284	
	Intel	8284	
μPB8286	AMD	8304	
		DP8304	
	Fujitsu	MBL8286	
	Intel	8286	
		8304	
	National	DP8304	
μPB8288	AMD	8288	
	Fujitsu	MBL8288	
	Intel	8288	
μPC141	AMD	LM305	
	Fairchild	μA305	
	Intersil	LM305	
	National	LM305	
	SiliconG	SG305	
	Thomson-CSF		
		SFC2305	
μPC142	National	LM304	
	SiliconG	SG304	
	Thomson-CSF		
		SFC2304	
μPC1458	AMD	AM1458	
	Exar	XR1458	
		XR4558	
	Fairchild	μA1458	
	Harris	HA-2655	
	Hitachi	HA17458	
	MicroPwr	MPOP14	
	Motorola	MC1458	
		MC4558C	
		RC4558	
	National	LM1458	
	NEC	μPC4558	
	PMI	PM1458	
	Raytheon	RC1458	
		RC4558	**3592**
	RCA	CA1458	
		LM1458	
		RC4558	
		SSS1458	
	Sanyo	LA6458A	
	Signetics	MC1458	
		NE4558	
	SiliconG	SG1458	
	TI	MC1458	
		RC4558	
μPC151	**AD**	**AD741**	**3351**
	Fairchild	3871	
		μA741	

(Continued)

◆ Discontinued

The manufacturers report their devices can be used as direct replacements.
Performance details often differ, so compare the specifications considering your requirements.

NEC Electronics (Cont'd)

Manufacturer Device	Replacement Source	Device	IC Master Page
μPC151	Hitachi	HA17741	
	Intersil	AD741	
		ICL741	
	MicroPwr	MP5501	
		MP5502	**3529**
		OP-02	**3529**
	Mostek	MK3871	
	Motorola	LM741	
		MC1741	
	National	LM741	
	NEC	μPC741	
	PMI	OP-01	
		OP-02	**3566**
		PM741	
		SSS741	
	Raytheon	RC741	
		RM741	
	RCA	CA3056	
		CA741	
	Signetics	μA741	
	SiliconG	SG300	
		SG741	
	TI	μA741	
	Thomson-CSF		
		SFC2741	
	Toshiba	TA7504	
μPC154	AMD	LM108	
	AD	**AD108**	**3351**
	Fairchild	μA108	
		μA725	
	Intel	ISBC108	
	Intersil	ICL108	
		LM108	
	LinearTech	LM108	
		LM108A	
		OP-05	
	MicroPwr	MP5501	
		MP5505	
		MPLM108A	
		OP-08	
	Motorola	LM108	
	National	LM108	
		LM108A	
	PMI	OP-01	
		OP-05	**3566**
		OP-06	
		OP-07	**3566**
		PM108	
		PM725	
	Raytheon	**OP-05**	**3592**
		OP-07	**3592**
		RC725	
		RM725	
	Signetics	LM108	
μPC1555	Cherry	CS555	
	Exar	XR555	
	Fairchild	μA555	
	Hitachi	HA17555	
	Motorola	MC1455	
	National	LM555	
	Raytheon	RC555	
	RCA	CA355	
		CA555	**3604**
	Sanyo	LB8555	
	Signetics	NE555	
	SiliconG	SG555	
	TI	NE555	
μPC157	AD	AD301	
	Fairchild	μA301A	
	Intersil	AD301	
	LinearTech	LM301	
		LM301A	
	Motorola	LM301	
	National	LM301	
		LM301A	
	NEC	μPC301	
	Raytheon	LM301	
	RCA	CA301	
		LM301	
	SiliconG	SG301	
	TI	LM301	
		LM301A	
	Thomson-CSF		
		SFC2301	
	Toshiba	TA7506	
μPC159	AMD	LM318	
	AD	AD518	
	Fairchild	μA318	
	National	LM318	

(Continued)

Manufacturer Device	Replacement Source	Device	IC Master Page
μPC159	TI	LM318	
	Thomson-CSF		
		TDB0118	
μPC2002	Hitachi	TDA2002	
	SGS	TDA2002	
	Telefunken	TDA2002	
μPC2005	SGS	TDA2005	
μPC251	AMD	747	
	Fairchild	μA747	
	Hitachi	HA17747	
	MicroPwr	MPOP04	
	Motorola	MC1747	
	National	LM747	
	PMI	**OP-04**	**3566**
		PM747	
	Raytheon	RC747	
		RM747	
	RCA	CA747	
	Signetics	μA747	
	SiliconG	SG747	
	TeledyneS	747	
	TI	μA747	
μPC255	Fairchild	μA709	
	Hitachi	HA1303	
	Motorola	MC1709	
	National	LM1709	
		LM709	
	NEC	μPC55	
	Raytheon	RC709	
		RM709	
	RCA	CA3038	
	TI	μA709	
	Thomson-CSF		
		SFC2709	
	Toshiba	TA7502	
μPC271	AMD	LM311	
	AD	AD311	
	Fairchild	μA2903	
		μA311	
	Intersil	LM311	
	Motorola	LM2903	
		LM311	
	National	LM2903	
		LM311	
	NEC	μPC311	
	Raytheon	LM311	
	RCA	**CA311**	**3598**
		LM311	
	Signetics	LM2903	
		LM311	
	SiliconG	SG311	
	TI	LM2903	
		LM311	
	Thomson-CSF		
		SFC2311	
		SFC3111	
μPC2901	Fairchild	μA2901	
		μA3302	
	Motorola	LM2901	
		MC3302	
	National	LM2901	
		LM3302	
	PMI	CMP-04	
	Raytheon	LM2901	
		RC3302	
	RCA	CA3302	
	Signetics	LM2901	
		MC3302	
	SiliconG	SG3302	
	TI	LM2901	
		LM3302	
μPC2902	Fairchild	μA2902	
	Hitachi	HA17902	
	Motorola	LM2902	
	National	LM2902	
	Raytheon	LM2902	
	TI	LM2902	
μPC301	AD	AD301	
	Fairchild	μA301A	
	Intersil	AD301	
	LinearTech	LM301	
		LM301A	
	Motorola	LM301	
	National	LM301	
		LM301A	
	NEC	μPC157	
	Raytheon	LM301	
	RCA	CA301	
		LM301	
	SiliconG	SG301	
	TI	LM301	
		LM301A	

(Continued)

Manufacturer Device	Replacement Source	Device	IC Master Page
μPC301	Thomson-CSF		
		SFC2301	
	Toshiba	TA7506	
μPC311	AMD	LM311	
	AD	AD311	
	Fairchild	μA2903	
		μA311	
	Intersil	LM311	
	Motorola	LM2903	
		LM311	
	National	LM2903	
		LM311	
	NEC	μPC271	
	Raytheon	LM311	
	RCA	**CA311**	**3598**
		LM311	
	Signetics	LM2903	
		LM311	
	SiliconG	SG311	
	TI	LM2903	
		LM311	
	Thomson-CSF		
		SFC2311	
		SFC3111	
μPC319	AMD	LM319	
	National	LM319	
	Signetics	LM319	
μPC324	AMD	LM324	
	Exar	**XR3403**	**3378**
		XR3403C	
	Fairchild	μA324	
		μA3403	
	Motorola	LM324	
		MC3403	
	National	LM324	
	Raytheon	LM324	
		RC3403	
		RC4137	
	RCA	CA324	
		LM324	
	Sanyo	LA6324	
	Signetics	LM324	
		MC3403	
	SiliconG	SG324	
	TI	LM324	
		MC3403	
	Thomson-CSF		
		TDB0124	
μPC339	AMD	LM339	
		LM339A	
	Fairchild	μA339	
	Hitachi	HA17901	
	Motorola	LM339	
	National	LM339	
	PMI	CMP-04	
		PM339A	
	Raytheon	LM339	
	RCA	**CA339**	**3599**
		CA339A	**3599**
		LM339	
	SiliconG	SG339	
	TI	LM339	
	Thomson-CSF		
		TDB0139	
μPC358	Motorola	LM358	
	National	LM358A	
	RCA	CA358A	
		LM358	
	Sanyo	LA6358	
	Signetics	LM358	
		NE532	
	TI	LM358	
μPC3911	National	LM3911	
μPC4558	AMD	AM1458	
	Exar	XR1458	
		XR4558	
	Fairchild	μA1458	
	Harris	HA-2655	
	Hitachi	HA17458	
	MicroPwr	MPOP14	
	Motorola	MC1458	
		MC4558C	
		RC4558	
	National	LM1458	
	NEC	μPC1458	
	PMI	PM1458	
	Raytheon	RC1458	
		RC4558	**3592**
	RCA	CA1458	
		LM1458	
		RC4558	
		SSS1458	

(Continued)

Manufacturer Device	Replacement Source	Device	IC Master Page
μPC4558	Sanyo	LA6458A	
	Signetics	MC1458	
		NE4558	
	SiliconG	SG1458	
	TI	MC1458	
		RC4558	
μPC4741	AMD	LM348	
	Exar	**XR4212**	**3378**
	Fairchild	μA348	
	Harris	HA-4741	
	MicroPwr	MP5511	
	Motorola	MC4741	
	National	LM348	
	PMI	OP-11	
	Raytheon	HA4741	
		LM348	
		RC4156	
	TI	LM348	
	Thomson-CSF		
		TDB0111	
		TDB0148	
μPC51	Motorola	MC1712	
μPC55	Fairchild	μA709	
	Hitachi	HA1303	
	Motorola	MC1709	
	National	LM1709	
		LM709	
	NEC	μPC255	
	Raytheon	RC709	
		RM709	
	RCA	CA3038	
	TI	μA709	
	Thomson-CSF		
		SFC2709	
	Toshiba	TA7502	
μPC6012	AMD	AM6012	
	AD	AD562	
	Burr-Brown	DAC862	
	Datel	DAC-562	
	Harris	HI562	
	MCE	MCE-6012	
	MicroPwr	MP562	
	Motorola	**AD562**	**3069**
	NEC	μPC648	
	PMI	DAC-312	
		DAC312B12	
	Raytheon	DAC-6012	
		DAC6012	
	Signetics	**AM6012**	**3605**
	TeledyneP	4068	
μPC603	**PMI**	**DAC-01C**	**3567**
μPC610	PMI	DAC-02C	
μPC624	AMD	AM1408	
		SSS1408	
	AD	AD1408	
		ADDAC-08	
	Datel	DAC-08B	
		DAC-I8BC	
		DAC-IC8B	
		DAC-IC8BC	**2863**
	Fairchild	DAC-08	
		MA0802M	
		μA0801	
		μA0802	
	Motorola	**DAC-08**	**3069**
		MC1408	
	National	DAC0800	
		DAC0801	
		DAC0802	
		DAC0806	
		DAC0807	
		DAC0808	
	PMI	DAC-08	
		DAC-1408	
	Raytheon	**DAC-08**	**3591**
	Signetics	MC1408	
μPC648	AMD	AM6012	
	AD	AD562	
	Burr-Brown	DAC862	
	Datel	DAC-562	
	Harris	HI562	
	MCE	MCE-6012	
	MicroPwr	MP562	
	Motorola	**AD562**	**3069**
	NEC	μPC6012	
	PMI	DAC-312	
		DAC312B12	
	Raytheon	DAC-6012	
		DAC6012	
	Signetics	**AM6012**	**3605**
	TeledyneP	4068	

♥ Discontinued

Bold face device numbers indicate manufacturers data is provided in the IC Master on the pages noted.

© IC MASTER 1994

NEC Electronics (Cont'd)

Manufacturer Device	Replacement Source	Device	IC Master Page
μPC725	AD	AD510	
		AD517	
		ADOP-07	**3351**
	Burr-Brown	3510	
	Datel	**AM-430**	**2864**
		AM-490-2	
	Fairchild	μA714	
	Harris	HA-2900	
		HA-2905	
		HA-5130	
		HA-5135	
	MicroPwr	MP517	
		MP5505	
		MP5507	
		~~OP-07~~	~~3529~~
	National	LH0044	
	PMI	**OP-05**	**3566**
		OP-07	**3566**
	Raytheon	**OP-05**	**3592**
		OP-07	**3592**
	TeledyneP	1340	
	TI	OP-07	
μPC741	**AD**	**AD741**	**3351**
	Fairchild	3871	
		μA741	
	Hitachi	HA17741	
	Intersil	AD741	
		ICL741	
	~~MicroPwr~~	~~MP5501~~	
		MP5502	**3529**
		OP-02	**3529**
	Mostek	MK3871	
	Motorola	LM741	
		MC1741	
	National	LM741	
	NEC	μPC151	
	PMI	OP-01	
		OP-02	**3566**
		PM741	
		SSS741	
	Raytheon	RC741	
		RM741	
	RCA	CA3056	
		CA741	
	Signetics	μA741	
	SiliconG	SG300	
		SG741	
	TI	μA741	
	Thomson-CSF		
		SFC2741	
	Toshiba	TA7504	
μPC7805	AMD	LM309	
	Fairchild	μA309	
		μA7805	
	Lambda	LLM309	
		LMC7805	
		LμA7805	
	Motorola	LM309	
		MC7805	**3531**
	National	LM309	
		LM7805	
	SGS	L7805	
		L7810	
	SiliconG	SG309	
		SG340-05	
		SG340-5	
	TI	μA7805	
	Thomson-CSF		
		SFC2309	
	Toshiba	TA78005	
μPC7808	Fairchild	μA7808	
	Lambda	LMC7808	
		LμA7808	
	Motorola	**MC7808**	**3531**
	SiliconG	SG340-8	
		SG7808	
	TI	LM340-8	
		μA7808	
μPC7812	Fairchild	μA7812	
	Lambda	LMC7812	
		LμA7812	
	Motorola	**MC7812**	**3531**
	National	LM7812	
	SGS	L7812	
	SiliconG	SG7812	
	TI	μA7812	
	Toshiba	TA78012	
μPC7815	Fairchild	μA7815	
		μA78L15	

(Continued)

Manufacturer Device	Replacement Source	Device	IC Master Page
μPC7815	Lambda	LMC7815	
		LμA7815	
	Motorola	**MC7815**	**3531**
		MC78L15	
	National	LM340-15	
		LM340LA-15	
		LM340T-15	
		LM7815	
		LM78L15	
	NEC	μPC78L15	
	SGS	L7815	
	SiliconG	SG340-15	
		SG7815	
	TI	LM340-15	
		μA7815	
		μA78L15	
	Thomson-CSF		
		SFC2815	
	Toshiba	TA78015	
μPC7818	Fairchild	μA7818	
	Lambda	LMC7818	
	SiliconG	SG340-18	
		SG7818	
	TI	LM340-18	
		μA7818	
μPC7824	Fairchild	μA7824	
	Lambda	LMC7824	
		LμA7824	
	Motorola	**MC7824**	**3532**
	SGS	L7824	
	SiliconG	SG7824	
	TI	LM340-24	
		μA7824	
μPC78L05	Fairchild	μA78L05	
	Motorola	MC78L05	
	National	LM340LA-5	
		LM78L05	
	TI	μA78L05	
	Thomson-CSF		
		SFC2805	
μPC78L08	Motorola	MC78L08	
	TI	μA78L08	
μPC78L12	Fairchild	μA78L12	
	Motorola	MC78L12	
	~~National~~	~~LM340LA-12~~	
		LM78L12	
	TI	μA78L12	
	Thomson-CSF		
		SFC2812	
μPC78L15	Fairchild	μA7815	
		μA78L15	
	Lambda	LMC7815	
		LμA7815	
	Motorola	**MC7815**	**3531**
		MC78L15	
	National	LM340-15	
		LM340LA-15	
		LM340T-15	
		LM7815	
		LM78L15	
	NEC	μPC7815	
	SGS	L7815	
	SiliconG	SG340-15	
		SG7815	
	TI	LM340-15	
		μA7815	
		μA78L15	
	Thomson-CSF		
		SFC2815	
	Toshiba	TA78015	
μPC78M05	Fairchild	μA78M05	
	Motorola	MC78M05	
	National	LM341-5	
		LM342-05	
		LM78M05	
	Sanyo	L78M05	
	TI	μA78M05	
μPC78M08	Fairchild	μA78M08	
	Motorola	MC78M08	
	Sanyo	L78M08	
	TI	μA78M08	
μPC78M12	NEA	μPC78M12	
	Fairchild	μA78M12	
	Motorola	MC78M12	
	National	LM341-12	
		LM342-12	
		LM78M12	
	Sanyo	L78M12	
μPC78M15	Fairchild	μA78M15	
	Motorola	MC78M15	
	National	LM341-15	
		LM342-15	

(Continued)

Manufacturer Device	Replacement Source	Device	IC Master Page
μPC78M15	National	LM78M15	
	Sanyo	L78M15	
μPD2/83128	AMD	AM92128	
	AMI	**S23128**	**3935**
	GI	R09128	
	Hitachi	HN613128	
	Motorola	MCM63128	
	National	S2128	
	NCR	NCR23128	
	NEC	μPD23/83128	
	OKI	**MSM38128**	**4118**
	Signetics	**23128-30**	**4202**
	Synertek	SY23128	
	VTI	**VT23128**	**4252**
μPD2/83256	AMD	AM92256	
	Fujitsu	MB83256	
	GI	R09256	
	Hitachi	HN613256	
	MicroPwr	MP2326	
	Mostek	MK38000	
	Motorola	MCM63256	
	NCR	23256	
	NEC	μPD23/83256	
	SMOS	SMM2326	
	Signetics	23256	
	Synertek	SY23256	
	Toshiba	TMM23256	
μPD2/8364-20	AMD	AM92640	
	AMI	**S68B364**	**3933**
	Fairchild	**F3564-25**	**1465**
	GTEMicro	G5364	
	Mostek	MK36000-4	
	Motorola	MCM67365-25	
	NEC	μPD23/8364-20	
	Signetics	2064-20	
	Synertek	SY2364-2	
μPD2/8364-35	AMD	AMD264	
	NEC	μPD23/8364-35	
μPD2101	AMD	AM2101A	
		AM9101	
	Intel	8101A	
	Synertek	SY2101	
μPD2102	Intel	8102A	
	SGS	M330	
~~μPD2111~~	~~AMD~~	~~AM2111A~~	
		AM9111	
	Intel	8111	
	Synertek	SY2111	
μPD2118	Hitachi	HM4816	
		HM4816A	
	Intel	2118	
	Intersil	IM7118	
	Mostek	MK4516	
	National	NMC5295	
	TI	TMS4516	
μPD2147	AMD	AM2147	
	AMI	4017	
	Fujitsu	MBM2147	
	Hitachi	HM4847	
	Intel	2147	
	Intersil	IM2147	
	ITT	4547	
	Motorola	MCM2147	
	National	MM2147	
	Synertek	SY2147	
	TI	TMS2147	
	Toshiba	TMM315	
	Universal	UM2147	
μPD2167	AMD	AM2167	
	Hitachi	HM6167	
	IMS	IMS1400	
	IDT	IDT6167	
	Intel	2167	
	ITT	2167	
	Mitel	M58757	
	Mitsubishi	M5M2167	
	Synertek	**SY2167**	**4210**
	TI	TMS2167	
μPD23/83128	AMD	AM92128	
	AMI	**S23128**	**3935**
	GI	R09128	
	Hitachi	HN613128	
	Motorola	MCM63128	
	National	S2128	
	NCR	NCR23128	
	NEC	μPD2/83128	
	OKI	**MSM38128**	**4118**
	Signetics	**23128-30**	**4202**
	Synertek	SY23128	
	VTI	**VT23128**	**4252**
μPD23/83256	AMD	AM92256	
	Fujitsu	MB83256	

(Continued)

Manufacturer Device	Replacement Source	Device	IC Master Page
μPD23/83256	GI	R09256	
	Hitachi	HN613256	
	MicroPwr	MP2326	
	Mostek	MK38000	
	Motorola	MCM63256	
	NCR	23256	
	NEC	μPD2/83256	
	SMOS	SMM2326	
	Signetics	23256	
	Synertek	SY23256	
	Toshiba	TMM23256	
IPD23/8364-20	AMD	AM92640	
	AMI	**S68B364**	**3933**
	Fairchild	**F3564-25**	**1465**
	GTEMicro	G5364	
	Mostek	MK36000-4	
	Motorola	MCM67365-25	
	NEC	μPD2/8364-20	
	Signetics	2064-20	
	Synertek	SY2364-2	
IPD23/8364-30	AMD	AM9264	
	AMI	S4264	
		S68A364	**3933**
	GTEMicro	2364-3	
	Hitachi	HN48364	
	Mostek	MK36000-5	
	Motorola	MCM68365	
		MCM68366	
	National	MM52164	
	NCR	2364	
	NEC	UPD2/8364-30	
	OKI	MSM2965	
	Signetics	2664A-30	
	Synertek	**SY2364-3**	**4211**
	Toshiba	TMM2364	
	Weitek	SC8164	
IPD23/8364-35	AMD	AMD264	
	NEC	μPD2/8364-35	
μPD2308	AMD	8308	
	Motorola	MCM68A308	
μPD23128	Signetics	23128	
	VTI	**VT23128**	**4252**
μPD2316	AMD	AM9218	
	Fairchild	3516	
		68316	
		F3516	
		F35316	
		F68316	**1464**
	GI	R03-9316	
	GTEMicro	2316	
	Intel	2316	
	Mostek	MK34000	
	Motorola	MCM68316	
		MCM68A316	
		MM2316	
	National	MM52116	
		MM5258	
	NCR	2316	
		NCR2316	
	OKI	**MSM2916**	**4118**
	Rockwell	R2316	
	SGS	M2316	
	TI	SBP8316	
	Toshiba	TMM331A	
		TMM334	
μPD2332	AMD	AM9232	
	AMI	S68322	
		S68A332	
	Fairchild	F3532	
	GI	R094132	
		T094132	
	GTEMicro	2332	
	Hitachi	HN46332	
	Intersil	IM7332	
	Motorola	MC68332	
		MCM68332	
		MCM68A332	**4048**
	National	MM52132	
	NCR	2332	
		NCR2332	
	OKI	**MSM2932**	**4118**
	RCA	**CDM5333**	**1593**
	Rockwell	R2332	
	SiliconG	SG3532	
	SSS	SCM23C32	
	SMC	ROM4732	
	Synertek	**SY2332**	**4211**
	TI	**TMS4732**	**4226**
	Toshiba	TM2332	

(Continued)

◆ Discontinued

The manufacturers report their devices can be used as direct replacements.
Performance details often differ, so compare the specifications considering your requirements.

NEC Electronics (Cont'd)

Manufacturer Device	Replacement Source	Device	IC Master Page
μPD2332	Toshiba	TMM333	
	Universal	UM2332	
	VTI	**VT2332**	**4249**
μPD2364	NCR	2365	
	Rockwell	R2364	
	Signetics	2364	
	Synertek	**SY2365**	**4211**
	VTI	**VT2365**	**4251**
μPD2716	AMD	AM2716	
	Fujitsu	MB2716	
	Hitachi	HN462716	
	Intel	2716	
	Mostek	MK2716	
	Motorola	MCM2716	
	National	MM2716	
	OKI	**MSM2716**	**4118**
	Panasonic	MN2716	
	SGS	M2716	
	TI	TMS2516	
μPD2732	AMD	AM2732	
	Hitachi	HN462732	
	Intel	2732	
		2732A	
		M2732	
	Mitsubishi	M5L2732	
	National	MM2732	
		NMC2732	
	Toshiba	TMM2732	
		TMM324C	
	Universal	UM2732	
μPD2764	AMD	AM2764	
	Fujitsu	MBM2764	
	Hitachi	HN482764	
	Intel	2764	
		M2764	
	Intersil	IM2764	
	Mitel	M5L2764	
	Mitsubishi	M5L2764	
	Mostek	MK2764	
	National	NMC2764	
	SEEQ	5133	
	Toshiba	TMM2764	
μPD4104	EMM-SESCO	4044	
	Intel	2141	
		2141A	
	Intersil	IM7141	
	Mostek	MK4104	
	Motorola	MCM6641	
	National	MM2141	
	TI	TMS4044	
	Zilog	Z6104	
μPD416	AMD	AM9016	
	Fairchild	F4116	
	Hitachi	HM4716	
	Intel	2118	
	Intersil	IM7116	
	ITT	ITT4116	
	Mostek	MK4116	
	Motorola	MCM4116	
	National	MM5290	
	Panasonic	MN4116	
	SGS	M4116	
	Siemens	HYB4116	
	Signetics	2690	
	TI	TMS4116	
μPD4164	Fairchild	F4164	
		F64K	
	Fujitsu	MB8264	
		MB8266	
	Hitachi	HM4864	
	IMS	IMS2600	
	Intel	2164	
	Motorola	MCM6665	
	National	NMC4164	
	OKI	MSM3764	
	TI	TMS4164	
	Toshiba	TMM4164	
μPD443	AMI	S6508	
	Fairchild	4736B	
	Harris	**HM6508**	**3965**
	Intel	2125A	
	Motorola	MCM2125	
	National	MM74C929	
		NMC6508	
	SSS	SCM21C02	
	Toshiba	TC5508	
μPD445	Toshiba	TC5047	
μPD446	Fujitsu	MB8416	
	Harris	HM65162	
		(Continued)	

Manufacturer Device	Replacement Source	Device	IC Master Page
μPD446	Hitachi	HM6116	
	IDT	IDT6116	
	MicroPwr	MP6116	
	Mostek	MK6116	
	Motorola	MCM6116	
	RCA	CDM6116	
	SMOS	SRM2016	
	Toshiba	TC5517A	
		TC5517B	
μPD449	Fujitsu	MB8418	
	Hitachi	HM6117	
	MicroPwr	MP6117	
	RCA	CDM6118	
	SMOS	SRM2018	
	Toshiba	TC5518B	
μPD4511	Fairchild	F4511	
	Hitachi	HD14511	
	Mitel	MD4511	
	MMI	4511	
	Motorola	MC14511	
	National	CD4511	
	RCA	CD4511	
	SGS	HCF4511	
	Signetics	HEF4511	
	SSS	SCL4511	
	Solitron	CM4511	
	Toshiba	TC4511	
μPD494	NEC	TL494	
μPD5101	Intersil	IM6551	
	National	MM74C920	
μPD6514	Fujitsu	MB8414	
	Harris	HM6514	
	Hitachi	HM4334	
	Intersil	IM6514	
	MicroPwr	MP6514	
	Mitsubishi	M58981	
	National	NMC6514	
	OKI	**MSM5115**	**4118**
	RCA	MWS5514	
	SMOS	SRM6514	
	Toshiba	TC5514	
μPD7201A	SMC	COM7201A	
μPD7210	SMC	COM7210	
μPD7220	SMC	CRT7220	
μPD7261	SMC	HDC7261	
μPD7501	AMI	7501	
μPD7502	AMI	7502	
μPD7503	AMI	7503	
μPD7506	AMI	7506	
μPD7507	AMI	7507	
μPD7508	AMI	7508	
μPD7508H	AMI	7508H	
μPD765	Intel	8272	
		8274	
	SMC	COM7201	
		FDC765	
μPD765A	SMC	FDC765A	
μPD780	Mostek	MK3880	
	SGS	Z80-CPU	
	Zilog	**Z80**	**1738**
		Z80-CPU	
μPD7800	AMI	7800	
μPD7801	AMI	7801	
◆μPD8021	Intel	8021	
	Signetics	8021	
◆μPD8022	Intel	8022	
μPD8035	AMD	8035	
	Fujitsu	MBL8035	
	Intel	8035	
	National	INS8035	
	Signetics	SCN8035	
μPD8039	AMD	D8039	
	Fujitsu	MBL8039	
	Intel	8039	
	National	INS8039	
	Signetics	SCN8039	
μPD8041A	AMD	8041	
	Intel	8041A	
μPD8048	AMD	8048	
	Fujitsu	MBL8048	
	Intel	8048	
	National	INS8048	
	Signetics	SCN8048	
	Toshiba	TMP8048	
μPD8049	Fujitsu	MBL8049	
	Intel	8049	
	National	INS8049	
	Signetics	SCN8049	
μPD8080	AMD	9080	
		9080A	
		AM9080	
	Intel	8080A	
		(Continued)	

Manufacturer Device	Replacement Source	Device	IC Master Page
μPD8080	National	DP8080A	
		INS8080A	
	TI	TMS8080	
		TMS8080A	
μPD8085	AMD	8085	
		8085A	
	Intel	8085	
		8085A	
	Toshiba	TMP8085A	
μPD8086	AMD	D8086	
		MD8086	
	Fujitsu	MBL8086	
	Intel	8086	
		MD8086	
◆μPD80C35	AMD	8035	
	Fujitsu	MBL8035	
	Intel	8035	
	National	INS8035	
	NEC	μPD8035	
	Signetics	SCN8035	
μPD8155	AMD	8155	
	Intel	8155	
	Toshiba	TMP8155	
μPD8156	AMD	8156	
	Intel	8156	
μPD8156-2	Intel	8156-2	
μPD8225	AMD	8255A-5	
		AM9555	
	Intel	8255A-5	
	National	INS8255	
	NEC	μPD8255	
μPD8243	AMD	8243	
	Fujitsu	MB8243	
	Intel	8243	
	Signetics	8243	
μPD8253	AMD	8253	
	Intel	8253	
	National	INS8253	
μPD8255	AMD	8255A-5	
		AM9555	
	Intel	8255A-5	
	National	INS8255	
	NEC	μPD8225	
μPD8257	AMD	8257	
	Intel	8257	
μPD8259	AMD	D8259	
	Fujitsu	MBL8259	
	Intel	8259	
	National	INS8259	
μPD8279-5	AMD	8279-5	
	Intel	8279	
μPD8287	AMD	8287	
	Intel	8287	
μPD8355	AMD	8355	
	Intel	8355	
	Toshiba	TMP8355	
μPD8741A	Intel	8741A	
μPD8748	Intel	8748	
	National	NS80CX48	
μPD8755	Intel	8755	
μPD8755A	Intel	8755A	
	Toshiba	TMP8755	

Nitron

Manufacturer Device	Replacement Source	Device	IC Master Page
NC1400	GI	ER1400	
	Mitsubishi	M5G1400	
	NCR	NCR1400	
◆NC2000	Rockwell	CRC8000	
NC2030	Rockwell	CRC8030	
NC2257	Motorola	MC2257	
NC2259	Motorola	MC2259	
NC2260	Motorola	MC2260	
NC2320	ITT	DF320	
	Mitel	MT4320	
	Siliconix	DF320	
NC2322	ITT	DF322	
	Mitel	MT4322	
NC5050	MasterLogic	ML50	
	MCE	MGC50	
	Monosil	ML50	
NC5100	Exar	XRCMA	
	Interdesign	**MCA**	**4746**
	MasterLogic	ML100	
	MCE	MGC110A	
	Monosil	ML100	
NC5150	Exar	XRCMB	
	Interdesign	**MCB**	**4746**
	MasterLogic	ML150	
	MCE	MGC160B	
	Monosil	ML150	

Manufacturer Device	Replacement Source	Device	IC Master Page
NC5200	Exar	XRMC	
	Interdesign	**MCC**	**4746**
	MasterLogic	ML200	
	MCE	MGC210C	
	Monosil	ML200	
NC5350	Exar	XRCMD	
	Interdesign	**MCD**	**4746**
	MasterLogic	ML350	
	MCE	MGC350D	
	Monosil	ML350	
NC5500	MasterLogic	ML500	
	MCE	MGC500	
	Monosil	ML500	
NC5600	MasterLogic	ML600	
	MCE	MGC600	
	Monosil	ML600	
NC7033	NCR	NCR7033	
NC7051	GI	ER2051	
	NCR	NCR2051	
NC7053	GI	ER5901	
	Xicor	X2201	
NC7055	NCR	NCR2055	
NC7451	GI	ER3400	
	Hughes	HNVM3704	
	NCR	NCR3400	
◆NC8000	Holt	HI8000	
NC91200	Universal	HCM1200	
NC9360	Universal	HCM360	
NC9540	Universal	HCM540	
NC9720	Universal	HCM720	
NC9960	Universal	HCM960	

OKI Semiconductor

Manufacturer Device	Replacement Source	Device	IC Master Page
MSM2128	AD	AD515	
	Burr-Brown	3528	
	Harris	HM6116	
	IDT	IDT6116	
	MicroPwr	MP6116	
	Mitsubishi	M5K8725	
	SMOS	SMM2016	
	Toshiba	TC5516	
MSM2716	AMD	AM2716	
	Fujitsu	MB2716	
	Hitachi	HN462716	
	Intel	2716	
	Mostek	MK2716	
	Motorola	MCM2716	
	National	MM2716	
	NEC	μPD2716	
	Panasonic	MN2716	
	SGS	M2716	
	TI	TMS2516	
MSM2916	AMD	AM9218	
	Fairchild	3516	
		68316	
		F3516	
		F35316	
		F68316	**1464**
	GI	RO3-9316	
	GTEMicro	2316	
	Intel	2316	
	Mostek	MK34000	
	Motorola	MCM68316	
		MCM68A316	
		MM2316	
	National	MM52116	
		MM5258	
	NCR	2316	
		NCR2316	
	NEC	μPD2316	
	Rockwell	R2316	
	SGS	M2316	
	TI	SBP8316	
	Toshiba	TMM331A	
		TMM334	
MSM2932	AMD	AM9232	
	AMI	S68322	
		S68A332	
	Fairchild	F3532	
	GI	RO94132	
		TO94132	
	GTEMicro	2332	
	Hitachi	HN46332	
	Intersil	IM7332	
	Motorola	MC68332	
		MCM68332	
		MCM68A332	**4048**
	National	MM52132	
	NCR	2332	
		NCR2332	
	NEC	**μPD2332**	**4100**
		(Continued)	

◆ Discontinued

Bold face device numbers indicate manufacturers data is provided in the IC Master on the pages noted.

© IC MASTER 1984

OKI Semiconductor (Cont'd)

Manufacturer Device	Replacement Source	Device	IC Master Page
MSM2932	**RCA**	**CDM5333**	**1593**
	Rockwell	R2332	
	SiliconG	SG3532	
	SSS	SCM23C32	
	SMC	ROM4732	
	Synertek	**SY2332**	**4211**
	TI	**TMS4732**	**4226**
	Toshiba	TM2332	
		TMM333	
	Universal	UM2332	
	VTI	**VT2332**	**4249**
MSM2965	AMD	AM9264	
	AMI	S4264	
		S68A364	**3933**
	GTEMicro	2364-3	
	Hitachi	HN48364	
	Mostek	MK36000-5	
	Motorola	MCM68365	
		MCM68366	
	National	MM52164	
	NCR	2364	
	NEC	UPD2/8364-30	
		μPD23/8364-30	
	Signetics	2664A-30	
	Synertek	**SY2364-3**	**4211**
	Toshiba	TMM2364	
	Weitek	SC8164	
MSM3764	Fairchild	F4164	
		F64K	
	Fujitsu	MB8264	
		MB8266	
	Hitachi	HM4864	
	IMS	IMS2600	
	Intel	2164	
	Motorola	MCM6665	
	National	NMC4164	
	NEC	μPD4164	
	TI	TMS4164	
	Toshiba	TMM4164	
MSM38128	AMD	AM92128	
	AMI	**S23128**	**3935**
	GI	RO9128	
	Hitachi	HN613128	
	Motorola	MCM63128	
	National	S2128	
	NCR	NCR23128	
	NEC	μPD2/83128	
		μPD23/83128	
	Signetics	**23128-30**	**4202**
	Synertek	SY23128	
	VTI	**VT23128**	**4252**
MSM4001	Fairchild	F4001	
	Hitachi	HD14001	
	Motorola	MC14001	
	National	CD4001	
		MM74C02	
	RCA	CD4001	
	Sanyo	LC4001B	
	SGS	HCF4001	
	Signetics	HEF4001	
	SSS	SCL4001	
	Solitron	CM4001	
	Toshiba	TC4001	
MSM4011	Fairchild	F4011	
	Hitachi	HD14011	
	Motorola	MC14011	
	National	CD4011	
		MM74C00	
	RCA	CD4011	
	Sanyo	LC4011	
	SGS	HCF4011	
	Signetics	HEF4011	
	SSS	SCL4011	
	Solitron	CM4011	
	Toshiba	TC4011	
MSM4013	Fairchild	F4013	
	Hitachi	HD14013	
	Motorola	MC14013	
	National	CD4013	
		MM74C74	
	RCA	CD4013	
	Sanyo	LC4013	
	SGS	HCF4013	
	Signetics	HEF4013	
	SSS	SCL4013	
	Solitron	CM4013	
	Toshiba	TC4013	
MSM4015	Fairchild	F4015	
	Hitachi	HD14015	
	Motorola	MC14015	

(Continued)

Manufacturer Device	Replacement Source	Device	IC Master Page
MSM4015	National	CD4015	
		MM74C164	
	RCA	CD4015	
	Sanyo	LC4015	
	SGS	HCF4015	
	Signetics	HEF4015	
	SSS	SCL4015	
	Solitron	CM4015	
	Toshiba	TC4015	
MSM4019	Fairchild	F4019	
	National	CD4019	
	RCA	CD4019	
	Sanyo	LC4019	
	SGS	HCF4019	
	Signetics	HEF4019	
	SSS	SCL4019	
	Solitron	CM4019	
	Toshiba	TC4019	
MSM4027	Fairchild	F4027	
	Hitachi	HD14027	
	Motorola	MC14027	
	National	CD4027	
		MM74C76	
	RCA	CD4027	
	Sanyo	LC4027	
	SGS	HCF4027	
	Signetics	HEF4027	
	SSS	SCL4027	
	Solitron	CM4027	
MSM4028	Fairchild	F4028	
	Hitachi	HD14028	
	Motorola	MC14028	
	National	CD4028	
		MM74C42	
	Sanyo	LC4028	
	SGS	HCF4028	
	Signetics	HEF4028	
	SSS	SCL4028	
	Solitron	CM4028	
	Toshiba	TC4028	
MSM4049	Fairchild	F4049	
	Hitachi	HD14049	
	Motorola	MC14049	
	National	CD4049	
	RCA	CD4049	
	Sanyo	LC4049	
	SGS	HCF4049	
	Signetics	HEF4049	
	SSS	SCL4049	
	Solitron	CM4049	
	Toshiba	TC4049	
MSM4069	Fairchild	F4069	
	Hitachi	HD14069	
	Motorola	MC14069	
	National	CD4069	
		MM54C04	
		MM74C04	
	RCA	CD4069	
	Sanyo	LC4069	
	SGS	HCF4069	
	Signetics	HEF4069	
	SSS	SCL4069	
		SCL4449	
	Solitron	CM4069	
	Toshiba	TC4069	
MSM4071	Fairchild	F4071	
	Hitachi	HD14071	
	Motorola	MC14071	
	National	CD4071	
		MM74C32	
	RCA	CD4071	
	Sanyo	LC4071	
	SGS	HCF4071	
	Signetics	HEF4071	
	SSS	SCL4071	
	Solitron	CM4071	
	Toshiba	TC4071	
MSM4081	Fairchild	F4081	
	Hitachi	HD14081	
	Motorola	MC14081	
	National	CD4081	
		MM74C08	
	RCA	CD4081	
	Sanyo	LC4081	
	SGS	HCF4081	
	Signetics	HEF4081	
	SSS	SCL4081	
	Solitron	CM4081	
	Toshiba	TC4081	
MSM4093	Fairchild	F4093	
	Hitachi	HD14093	
	Motorola	MC14093	

(Continued)

Manufacturer Device	Replacement Source	Device	IC Master Page
MSM4093	National	CD4093	
	RCA	CD4093	
	Sanyo	LC4093	
	SGS	HCF4093	
	Signetics	HEF4093	
	SSS	SCL4093	
	Toshiba	TC4093	
MSM4520	Fairchild	F4520	
	Hitachi	HD14520	
	Motorola	MC14520	
	National	CD4520	
	RCA	CD4520	
	Sanyo	LC4520	
	SGS	HCF4520	
	Signetics	HEF4520	
	SSS	SCL4520	
	Solitron	CM4520	
	Toshiba	TC4520	
MSM4538	Motorola	MC14538	
	National	CD4538	
	Signetics	HEF4538	
MSM4XXX	Fairchild	34XXX	
		F4XXX	
	Hitachi	HD14XXX	
	Motorola	MC14XXX	
	National	CD4XXX	
	RCA	CD4XXX	
	SGS	HCF4XXX	
	SSS	SCL4XXX	
	Solitron	CM4XXX	
	TI	TP4000 series	
	Toshiba	TC4XXX	
MSM5115	Fujitsu	MB8414	
	Harris	HM6514	
	Hitachi	HM4334	
	Intersil	IM6514	
	MicroPwr	MP6514	
	Mitsubishi	M58981	
	National	NMC6514	
	NEC	μPD6514	
	RCA	MWS5514	
	SMOS	SRM6514	
	Toshiba	TC5514	
MSM5128	**AMD**	**AM9128**	**3917**
	~~Fairchild~~	~~F3528~~	
	Fujitsu	MB8128	
	Intel	2128	
	Motorola	MCM2016	
	National	NMC2116	
	Synertek	SY2128	
		SY2129	
	TI	TMS4016	
	Toshiba	TMM2016	

Optical Electronics Inc.

Manufacturer Device	Replacement Source	Device	IC Master Page
9910	National	LH0002	
9932	National	LH0032	
	TeledyneP	0032	
9963	National	LH0063	
AH0605	**Burr-Brown**	**OPA605**	**2851**

Panasonic

Manufacturer Device	Replacement Source	Device	IC Master Page
AN5310	Signetics	TDA3570	
MN1001	National	MM5280	
MN2102	Fairchild	2102H	
	National	MM2102A	
	SGS	M2102A	
MN2114	AMD	AM9114	
	EMM-SESCO	2114	
	Fairchild	F2114	
	Hitachi	HM472114	
	Intel	2114	
		2114A	
	Intersil	IM2114	
	MicroPwr	MP2114	
	Motorola	MCM2114	
	National	MM2114	
	NEC	μPD2114	
	OKI	**MSM2114**	**4118**
	SMOS	SRM2114	
	SSS	SCM21C14	
	Synertek	**SY2114**	**4210**
	TI	TMS4045	
	Toshiba	TMM314	
		TMM314A	
MN2708	AMD	AM2708	
	Hitachi	HN462708	
	Motorola	MC27A08	
		MCM2708	
	National	MM2708	

(Continued)

Manufacturer Device	Replacement Source	Device	IC Master Page
MN2708	Rockwell	2708	
	TI	TMS2708	
MN2716	AMD	AM2716	
	Fujitsu	MB2716	
	Hitachi	HN462716	
	Intel	2716	
	Mostek	MK2716	
	Motorola	MCM2716	
	National	MM2716	
	NEC	μPD2716	
	OKI	**MSM2716**	**4118**
	SGS	M2716	
	TI	TMS2516	
MN4116	AMD	AM9016	
	Fairchild	F4116	
	Hitachi	HM4716	
	Intel	2118	
	Intersil	IM7116	
	ITT	ITT4116	
	Mostek	MK4116	
	Motorola	MCM4116	
	National	MM5290	
	NEC	**μPD416**	**4073**
	SGS	M4116	
	Siemens	HYB4116	
	Signetics	2690	
	TI	TMS4116	
OM200	Signetics	OM200	

Philips

Manufacturer Device	Replacement Source	Device	IC Master Page
TAA263	Cherry	CS263	
◆TAA560	Cherry	CS560	
TDA1060	Ferranti	ZN1060	
	Signetics	**NE5560**	**3652**
		TDA1060	
	Sprague	ULN-8160	

Plessey Semiconductors

Manufacturer Device	Replacement Source	Device	IC Master Page
MB8860	GTEMicro	G8860	
	Mitel	MT8860	
MP2812	AMD	TMS2812	
MP3812	AMD	AM2812	
MV5087	AMI	S2859	
	GI	AY5-9559	
	Mitel	MT5087	
	Mostek	MK5087	
	National	TP5087	
	TI	TCM5087	
MV5089	**AMI**	**S25089**	**3340**
	Mitel	MT5089	
	Mostek	MK5089	
	National	TP5089	
	TI	TCM5089	
MV74SC137	GTEMicro	G74SC137	
	Mitel	MD74SC137	
	SPI	SP74SC137	
MV74SC138	GTEMicro	G74SC138	
	Mitel	MD74SC138	
	RCA	CDP1873	
	SPI	SP74SC138	
MV74SC139	GTEMicro	G74SC139	
	Mitel	MD74SC139	
	SPI	SP74SC139	
MV74SC240	GTEMicro	G74SC240	
	Mitel	MD74SC240	
	SPI	SP74SC240	
MV74SC241	GTEMicro	G74SC241	
	Mitel	MD74SC241	
	SPI	SP74SC241	
MV74SC244	GTEMicro	G74SC244	
	Mitel	MD74SC244	
	SPI	SP74SC244	
MV74SC245	Fairchild	74LS245	
	GTEMicro	G74SC245	
	Mitel	MD74SC245	
	MMI	**SN74LS245**	**804**
	Motorola	SN74LS245	
	National	DM74LS245	
	SPI	SP74SC245	
	Signetics	74LS245	
		N8T245	**876**
	TI	SN74LS245	
MV74SC373	GTEMicro	G74SC373	
	Mitel	MD74SC373	
	SPI	SP74SC373	
MV74SC374	GTEMicro	G74SC374	
	Mitel	MD74SC374	
	SPI	SP74SC374	

◆ Discontinued

The manufacturers report their devices can be used as direct replacements.
Performance details often differ, so compare the specifications considering your requirements.

Plessey Semiconductors (Cont'd)

Manufacturer Device	Replacement Source	Device	IC Master Page
MV8865	GTEMicro	G8865	
	Mitel	MT8865	
	Mostek	MK8865	
MV8912	GTEMicro	G8912	
	Intel	2912	
		ID2912	
	Mostek	MK5912	
		MK8912	
	National	TP3040	
	TI	TCM2912	
		TCM2912B	
PIC1650A	GI	PIC1650A	
PIC1655A	GI	PIC1655A	
PIC1656	GI	PIC1656	
SL1496	Fairchild	μA796	
	Motorola	MC1496	
	National	LM1496	
	Signetics	MC1496	
	SiliconG	SG1496	
SL1596	Motorola	MC1596	
	National	LM1596	
	Signetics	MC1596	
	SiliconG	SG1596	
SL3045	Fairchild	μA3045	
	Hitachi	HA1127	
	National	LM3045	
	Plessey	SL3145	
	RCA	**CA3045**	**3601**
	Sanyo	LA3045	
	SiliconG	SG3045	
		SG3821	
	Sprague	ULS-2045	
SL3046	Fairchild	μA3046	
	Motorola	MC3346	
	National	LM3046	
	Plessey	SL3146	
	RCA	**CA3046**	**3601**
		CA3146	**3601**
	Sanyo	LA3046	
	SiliconG	SG3046	
		SG3146	
		SG3821	
	Sprague	ULN-2046	
SL3081	**RCA**	**CA3081**	**3601**
	Signetics	CA3081	
	SiliconG	SG3081	
	Sprague	ULN-2081	
SL3082	**RCA**	**CA3082**	**3601**
	SiliconG	SG3082	
	Sprague	ULN-2082	
SL3083	Plessey	SL3183	
	RCA	CA3083	
		CA3183	**3601**
	SiliconG	SG3083	
		SG3183	
	Sprague	ULN-2083	
SL3086	Fairchild	μA3086	
	Motorola	MC3386	
	National	LM3086	
	RCA	**CA3086**	**3601**
	Sanyo	LA3086	
	SiliconG	SG3086	
		SG3886	
	Sprague	ULN-2086	
SL3127	**RCA**	**CA3127**	**3601**
SL3145	Fairchild	μA3045	
	Hitachi	HA1127	
	National	LM3045	
	Plessey	SL3045	
	RCA	**CA3045**	**3601**
	Sanyo	LA3045	
	SiliconG	SG3045	
		SG3821	
	Sprague	ULS-2045	
SL3146	Fairchild	μA3046	
	Motorola	MC3346	
	National	LM3046	
	Plessey	SL3046	
	RCA	**CA3046**	**3601**
		CA3146	**3601**
	Sanyo	LA3046	
	SiliconG	SG3046	
		SG3146	
		SG3821	
	Sprague	ULN-2046	
SL3183	Plessey	SL3083	
	RCA	CA3083	
		CA3183	**3601**
	SiliconG	SG3083	
SL3183	SiliconG	SG3183	
	Sprague	ULN-2083	
SL748	AMD	LM201	
	AD	AD201	
	Fairchild	μA201	
		μA748	
	Intersil	LM748	
		μA748	
	Motorola	LM201	
		MC1748	
	National	LM201	
		LM748	
	RCA	CA201	
		CA748	
		LM748	
	SiliconG	SG201	
		SG748	
	TI	LM201	
		SN72748P	
		μA748	
	Thomson-CSF		
		SFC2201	
		SFC2748	
SP1648	Motorola	MC1648	
SP1650	Motorola	MC1650	
SP1651	Motorola	MC1651	
SP1658	Fairchild	11C58	
	Motorola	MC1658	
SP1660	Motorola	MC1660	
SP1662	Motorola	MC1662	
SP1664	Motorola	MC1664	
SP1666	Motorola	MC1666	
SP1668	Motorola	MC1668	
SP1670	Fairchild	11C70	
	Motorola	MC1670	
SP1672	Motorola	MC1672	
SP1674	Motorola	MC1674	
SP1692	Motorola	MC1692	
SP4040	Siemens	SDA4040	
SP4551	Siemens	SDA4041	
SP8610	Fairchild	11C05	
	Motorola	MC1699	
	Plessey	SP8616	
SP8611	**RCA**	**CA3199**	**3603**
SP8616	Fairchild	11C05	
	Motorola	MC1699	
	Plessey	SP8610	
SP8629	National	MM8629	
SP8640	Fairchild	95H90	
	Plessey	SP8647	
SP8647	Fairchild	95H90	
	Plessey	SP8640	
SP8656	National	DS8627	
SP8658	National	DS8628	
SP8680	Fairchild	11C90	
	Plessey	SP8685	
SP8685	Fairchild	11C90	
	Plessey	SP8680	
SP8740	Fairchild	11C91	
SP8793	National	DS8616	
SP9685	AMD	AM9685	
SP9687	AMD	AM9687	
TAB1042	**Exar**	**XR4202**	**3378**
TBA120	National	TBA120	
	Siemens	TBA120	
	Signetics	TBA120	
	Telefunken	TBA120	
TBA440	National	TBA440	
	Siemens	TBA440	
TBA530	National	TBA530	
	Telefunken	TBA530	
TBA540	National	TBA540	
	Signetics	TBA540	
	Telefunken	TBA540	
TBA560	National	TBA560	
	Telefunken	TBA560	
TBA750	Signetics	TBA750	
TBA800	Fairchild	TBA800	
	SGS	TBA800	
	Thomson-CSF		
		TBA800	
TBA920	National	TBA920	
TBA950	ITT	TBA950	
	National	TBA950	
TBA990	National	TBA990	
	Telefunken	TBA990	
TDA1085	Motorola	TDA1085	
TDA1085A	Motorola	TDA1085A	
TDA2522	National	TDA2522	
	Siemens	TDA2522	
TDA2523	National	TDA2523	
TDA2530	Hitachi	HN462532	
	Motorola	MCM2532	
	National	MM2532	
		NMC2532	
		TDA2530	
		TDA2532	
	Siemens	TDA2530	
	SiliconG	SG2532	
	TI	TMS2532	
	Universal	UM2532	
TDA2540	National	TDA2540	
	Signetics	TDA2540	
TDA2541	National	TDA2541	
	Signetics	TDA2541	
TDA2560	National	TDA2560	
	Siemens	TDA2560	
	Signetics	TDA2560	
TDA2591	National	TDA2591	
	Telefunken	TDA2591	
TDA2593	National	TDA2593	
	Signetics	TDA2593	
	Telefunken	TDA2593	
TDA440	National	TDA440	
	SGS	TDA440	
	Telefunken	TDA440	

Precision Monolithics Inc.

Manufacturer Device	Replacement Source	Device	IC Master Page
♦BUF-01	AMD	LM310	
	Intersil	LM310	
	National	LM310	
	PMI	BUF-03	
	SiliconG	SG310	
	Thomson-CSF		
		SFC2310	
♦BUF-02	AMD	LM310	
	Intersil	LM310	
	National	LM310	
	PMI	BUF-03	
	SiliconG	SG310	
	Thomson-CSF		
		SFC2310	
BUF-03	AMD	LM310	
	Intersil	LM310	
	National	LM310	
	SiliconG	SG310	
	Thomson-CSF		
		SFC2310	
CMP-05	Fairchild	μA760	
	National	LM160	
DAC-01	MicroPwr	DAC-01	
		MP5520	
DAC-01C	NEC	μPC603	
DAC-02C	NEC	μPC610	
DAC-08	AMD	AM1408	
		SSS1408	
	AD	AD1408	
		ADDAC-08	
	Datel	DAC-08B	
		DAC-I8BC	
		DAC-IC8B	
		DAC-IC8BC	**2863**
	Fairchild	DAC-08	
		MA0802M	
		μA0801	
		μA0802	
	Motorola	**DAC-08**	**3069**
		MC1408	
	National	DAC0800	
		DAC0801	
		DAC0802	
		DAC0806	
		DAC0807	
		DAC0808	
	NEC	μPC624	
	PMI	DAC-1408	
	Raytheon	**DAC-08**	**3591**
	Signetics	MC1408	
DAC-10	**Datel**	**DAC-IC10B**	**2863**
	Raytheon	DAC-10	
DAC-1408	AMD	AM1408	
		SSS1408	
	AD	AD1408	
		ADDAC-08	
	Datel	DAC-08B	
		DAC-I8BC	
		DAC-IC8B	
		DAC-IC8BC	**2863**
	Fairchild	DAC-08	
		MA0802M	
		μA0801	
		μA0802	
DAC-1408	**Motorola**	**DAC-08**	**3069**
		MC1408	
	National	DAC0800	
		DAC0801	
		DAC0802	
		DAC0806	
		DAC0807	
		DAC0808	
	NEC	μPC624	
	PMI	DAC-08	
	Raytheon	**DAC-08**	**3591**
	Signetics	MC1408	
DAC-1508	**Datel**	**DAC-IC8BM**	**2863**
	Motorola	MC1508	
	Signetics	MC1508	
		SE5008	
		SE5009	
DAC-312	AMD	AM6012	
	AD	AD562	
	Burr-Brown	DAC862	
	Datel	DAC-562	
	Harris	HI562	
	MCE	MCE-6012	
	MicroPwr	MP562	
	Motorola	**AD562**	**3069**
	NEC	μPC6012	
		μPC648	
	PMI	DAC312B12	
	Raytheon	DAC-6012	
		DAC6012	
	Signetics	**AM6012**	**3605**
	TeledyneP	4068	
DAC-565	**Raytheon**	**DAC-565**	**3589**
DAC312B12	AMD	AM6012	
	AD	AD562	
	Burr-Brown	DAC862	
	Datel	DAC-562	
	Harris	HI562	
	MCE	MCE-6012	
	MicroPwr	MP562	
	Motorola	**AD562**	**3069**
	NEC	μPC6012	
		μPC648	
	PMI	DAC-312	
	Raytheon	DAC-6012	
		DAC6012	
	Signetics	**AM6012**	**3605**
	TeledyneP	4068	
DMX-88	AD	AD7501	
	Burr-Brown	MPC8S	
	Datel	**MX-808**	**2864**
	Harris	HI-508	
		HI508	
		HI508A	
	Intersil	IH6108	
	MicroPwr	MP7501	
		MP7508	
	National	LF11508	
		LF13508	
	PMI	MUX-08	
		MUX-88	
	Siliconix	DG508	
		DG508A	
	TeledyneP	4554	
LM13600	Exar	XR13600	
	National	LM13600	
	Raytheon	LM13600	
MUX-08	AD	AD7501	
	Burr-Brown	MPC8S	
	Datel	**MX-808**	**2864**
	Harris	HI-508	
		HI508	
		HI508A	
	Intersil	IH6108	
	MicroPwr	MP7501	
		MP7508	
	National	LF11508	
		LF13508	
	PMI	DMX-88	
		MUX-88	
	Siliconix	DG508	
		DG508A	
	TeledyneP	4554	
MUX-16	**Burr-Brown**	**MPC16S**	**2850**
	Datel	**MV-1606**	**2864**
		MX-1606	**2864**
	Harris	HI1840	
		HI506	
		HI506A	
	Intersil	IH6116	
MUX-24	**Burr-Brown**	**MPC4D**	**2850**
	Datel	**MXD-409**	**2864**

(Continued)

♦ Discontinued

Bold face device numbers indicate manufacturers data is provided in the IC Master on the pages noted.

© IC MASTER 1984

Precision Monolithics Inc. (Cont'd)

Manufacturer Device	Replacement Source	Device	IC Master Page
MUX-24	Harris	HI-509	
		HI509	
		HI509A	
	Intersil	IH6208	
	MicroPwr	MP7509	
	National	LF11509	
		LF13509	
	Siliconix	DG509	
		DG509A	
	TeledyneP	4553	
MUX-28	AD	AD7507	
	Burr-Brown	**MPC8D**	**2850**
	Datel	**MVD-807**	**2864**
		MXD-807	**2864**
	Harris	HI507	
		HI507A	
	Intersil	IH6216	
	MicroPwr	MP7507	
	Siliconix	DG507	
		DG507A	
	TeledyneP	4551	
MUX-88	AD	AD7501	
	Burr-Brown	MPC8S	
	Datel	**MX-808**	**2864**
	Harris	HI-508	
		HI508	
		HI508A	
	Intersil	IH6108	
	MicroPwr	MP7501	
		MP7508	
	National	LF11508	
		LF13508	
	PMI	DMX-88	
		MUX-08	
	Siliconix	DG508	
		DG508A	
	TeledyneP	4554	
OP-01	AMD	LM108	
	AD	**AD108**	**3351**
	Fairchild	μA108	
		μA725	
	Intel	**ISBC108**	
	Intersil	ICL108	
		LM108	
	LinearTech	LM108	
		LM108A	
		OP-05	
	MicroPwr	MP5501	
		MP5505	
		MPLM108A	
		OP-08	
	Motorola	LM108	
	National	LM108	
		LM108A	
	NEC	μPC154	
	PMI	**OP-05**	**3566**
		OP-06	
		OP-07	**3566**
		PM108	
		PM725	
	Raytheon	**OP-05**	**3592**
		OP-07	**3592**
		RC725	
		RM725	
	Signetics	LM108	
OP-03	MicroPwr	MPOP03	
OP-07	AD	AD-OP07	
		OP-07	
	Harris	HA-OP07	
	LinearTech	OP-07	
	Raytheon	**OP-07**	**3592**
	TI	OP-07	
OP-08	MicroPwr	OP08	
OP-09	Exar	XR4136	
	Fairchild	μA4136	
	MicroPwr	MP5509	
	PMI	PM4136	
	Raytheon	RC4136	
	SiliconG	SG4136C	
	TI	RC4136	
OP-10	MicroPwr	MP5510	
		OP-10	**3529**
OP-11	AMD	LM348	
	Exar	**XR4212**	**3378**
	Fairchild	μA348	
	Harris	HA-4741	
	MicroPwr	MP5511	
	Motorola	MC4741	
	National	LM348	

(Continued)

Manufacturer Device	Replacement Source	Device	IC Master Page
OP-11	NEC	μPC4741	
	Raytheon	HA4741	
		LM348	
		RC4156	
	TI	LM348	
	Thomson-CSF		
		TDB0111	
		TDB0148	
OP-12	MicroPwr	MPOP12	
OP-19	Intersil	ICL741HS	
OP-207	MicroPwr	MPOP207	
OP-2108	**MicroPwr**	**MPOP2108**	**3529**
OP-227	MicroPwr	MPOP227	
OP-24	Motorola	OP-24G	
OP-25	Exar	XR072	
	Fairchild	μAF772	
	TI	TL072	
OP-27	Datel	AM-427	
	LinearTech	OP-27	
	MicroPwr	**MP5527**	**3529**
		OP-27	**3529**
	Raytheon	OP-27	
OP-34	Burr-Brown	OPA37	
	Raytheon	OP-37	
PM108	AMD	LM108	
	AD	**AD108**	**3351**
	Fairchild	μA108	
		μA725	
	Intel	ISBC108	
	Intersil	ICL108	
		LM108	
	LinearTech	LM108	
		LM108A	
		OP-05	
	MicroPwr	MP5501	
		MP5505	
		MPLM108A	
		OP-08	
	Motorola	LM108	
	National	LM108	
		LM108A	
	NEC	μPC154	
	PMI	OP-01	
		OP-05	**3566**
		OP-06	
		OP-07	**3566**
		PM725	
	Raytheon	**OP-05**	**3592**
		OP-07	**3592**
		RC725	
		RM725	
	Signetics	LM108	
PM139	AMD	LM139	
	Fairchild	μA139	
	Motorola	LM139	
	National	LM139	
	PMI	CMP-04	
	Raytheon	LM139	
	RCA	**CA139**	**3599**
	Signetics	LM139	
	SiliconG	SG139	
	TI	LM139	
PM139A	AMD	LM139A	
	Motorola	LM139A	
	National	LM139A	
	PMI	CMP-04	
	RCA	**CA139A**	**3599**
	SiliconG	SG139A	
	TI	LM139A	
PM1458	AMD	AM1458	
	Exar	XR1458	
		XR4558	
	Fairchild	μA1458	
	Harris	HA-2655	
	Hitachi	HA17458	
	MicroPwr	MPOP14	
	Motorola	MC1458	
		MC4558C	
		RC4558	
	National	LM1458	
	NEC	μPC1458	
		μPC4558	
	Raytheon	RC1458	
		RC4558	**3592**
	RCA	CA1458	
		LM1458	
		RC4558	
		SSS1458	
	Sanyo	LA6458A	
	Signetics	MC1458	
		NE4558	
	SiliconG	SG1458	

(Continued)

Manufacturer Device	Replacement Source	Device	IC Master Page
PM1458	TI	MC1458	
		RC4558	
PM155	AMD	LF155	
	Intersil	LF155	
	Motorola	LF155	
	National	LF155	
	PMI	OP-15	
	Thomson-CSF		
		TDC0155	
PM1558	AMD	AM1558	
	Exar	XR1558	
	Fairchild	μA1558	
	Harris	**HA-2650**	**3414**
	Motorola	MC1558	
		MC4558	
		RC1558	
	National	LM1558	
	PMI	**OP-14**	**3566**
	Raytheon	RC1558	
		RM1558	
		RM4558	
	RCA	CA1558	
		LM1558	
		SSS1558	
	Signetics	MC1558	
	SiliconG	SG1558	
	TI	MC1558	
		RM4558	
PM156	AMD	LF156	
	Intersil	LF156	
	MicroPwr	OP-16	
	National	LF156	
	PMI	OP-16	
	Thomson-CSF		
		TDC0156	
PM157	AMD	LF157	
	Intersil	LF157	
	MicroPwr	OP-17	
	National	LF157	
	PMI	OP-17	
	Signetics	LF157	
	Thomson-CSF		
		TDC0157	
PM208	AMD	LM208	
	AD	**AD208**	**3351**
	Fairchild	μA208	
	LinearTech	OP-05	
	MicroPwr	MP5505	
		MP5508	**3529**
		MPLM208	**3529**
	Motorola	LM208	
	National	LM208	
	PMI	**OP-05**	**3566**
	Raytheon	**OP-05**	**3592**
	SiliconG	SG208	
	TI	μA714	
	Thomson-CSF		
		SFC2208	
PM2108	Intersil	LH2108	
	National	LH2108	
PM2108A	Intersil	LH2108A	
	National	LH2108A	
PM2208	National	LH2208	
PM2208A	Intersil	LH2208A	
	National	LH2208A	
PM2308	Intersil	LH2308	
	National	LH2308	
PM2308A	Intersil	LH2308A	
	National	LH2308A	
PM239	AMD	LM239	
	Fairchild	μA239	
	Motorola	LM239	
	National	LM239	
	PMI	CMP-04	
	Raytheon	LM239	
	RCA	**CA239**	**3599**
	Signetics	LM239	
	SiliconG	SG239	
	TI	LM239	
	Thomson-CSF		
		TDE0139	
◆PM239A	AMD	LM239A	
	Motorola	LM239A	
	National	LM239A	
	PMI	CMP-04	
	RCA	**CA239A**	**3599**
	SiliconG	SG239A	
PM255	AMD	LF255	
	National	LF255	
	Thomson-CSF		
		TDE0155	

Manufacturer Device	Replacement Source	Device	IC Master Page
◆PM256	AMD	LF256	
	National	LF256	
	Thomson-CSF		
		TDE0156	
◆PM257	AMD	LF257	
	National	LF257	
	Thomson-CSF		
		TDE0157	
PM339A	AMD	LM339	
		LM339A	
	Fairchild	μA339	
	Hitachi	HA17901	
	Motorola	LM339	
	National	LM339	
	NEC	μPC339	
	PMI	CMP-04	
	Raytheon	LM339	
	RCA	**CA339**	**3599**
		CA339A	**3599**
		LM339	
	SiliconG	SG339	
	TI	LM339	
	Thomson-CSF		
		TDB0139	
PM355	AMD	LF355	
	Intersil	LF355	
	Motorola	LF355	
	National	LF355	
PM356	AMD	LF356	
	Intersil	LF356	
	Motorola	LF356	
	National	LF356	
	Signetics	LF356	
PM357	AMD	LF357	
	AnalogSys	LF357	
	Intersil	LF357	
	Motorola	LF357	
	National	LF357	
PM4136	Exar	XR4136	
	Fairchild	μA4136	
	MicroPwr	MP5509	
	PMI	OP-09	
	Raytheon	RC4136	
	SiliconG	SG4136C	
	TI	RC4136	
PM725	AMD	LM108	
	AD	**AD108**	**3351**
	Fairchild	μA108	
		μA725	
	Intel	ISBC108	
	Intersil	ICL108	
		LM108	
	LinearTech	LM108	
		LM108A	
		OP-05	
	MicroPwr	MP5501	
		MP5505	
		MPLM108A	
		OP-08	
	Motorola	LM108	
	National	LM108	
		LM108A	
	NEC	μPC154	
	PMI	OP-01	
		OP-05	**3566**
		OP-06	
		OP-07	**3566**
		PM108	
	Raytheon	**OP-05**	**3592**
		OP-07	**3592**
		RC725	
		RM725	
	Signetics	LM108	
PM741	**AD**	**AD741**	**3351**
	Fairchild	3871	
		μA741	
	Hitachi	HA17741	
	Intersil	AD741	
		ICL741	
	MicroPwr	MP5501	
		MP5502	**3529**
		OP-02	**3529**
	Mostek	MK3871	
	Motorola	LM741	
		MC1741	
	National	LM741	
	NEC	μPC151	
		μPC741	
	PMI	OP-01	
		OP-02	**3566**
		SSS741	
	Raytheon	RC741	

(Continued)

◆ Discontinued

The manufacturers report their devices can be used as direct replacements.
Performance details often differ, so compare the specifications considering your requirements.

Precision Monolithics Inc. (Cont'd)

Manufacturer Device	Replacement Source	Device	IC Master Page
PM741	Raytheon	RM741	
	RCA	CA3056	
		CA741	
	Signetics	μA741	
	SiliconG	SG300	
		SG741	
	TI	μA741	
	Thomson-CSF		
		SFC2741	
	Toshiba	TA7504	
PM747	AMD	747	
	Fairchild	μA747	
	Hitachi	HA17747	
	MicroPwr	MPOP04	
	Motorola	MC1747	
	National	LM747	
	NEC	μPC251	
	PMI	**OP-04**	**3566**
	Raytheon	RC747	
		RM747	
	RCA	CA747	
	Signetics	μA747	
	SiliconG	SG747	
	TeledyneS	747	
	TI	μA747	
REF-01	HybridSys	HSREF01	
	MicroPwr	**MP5532**	**3529**
		REF-01	
	Motorola	**MC1404-10**	**3535**
		MC1504-10	**3535**
	Raytheon	**REF-01**	**3584**
	TeledyneS	9496	
REF-01AZ	Motorola	MC1500AU10	
REF-01EZ	Motorola	MC1400AU10	
REF-02	**Motorola**	**MC1404-5**	**3535**
	Raytheon	**REF-02**	**3585**
REF-02AZ	Motorola	MC1500AU5	
REF-02EZ	Motorola	MC1400AU5	
REF-03	**Raytheon**	**REF-03**	**3586**
REF-05	MicroPwr	MPREF05	
REF-10	MicroPwr	MPREF10	
SMP-10	AD	AD583	
	Datel	**SHM-IC-1**	**2864**
	Harris	**HA-2425**	**2955**
	PMI	SMP-11	
	TeledyneP	4856	
SMP-11	AD	AD583	
	Datel	**SHM-IC-1**	**2864**
	Harris	**HA-2425**	**2955**
	PMI	SMP-10	
	TeledyneP	4856	
SW-02	National	LF13202	
	Siliconix	DG202	
SW-03	National	LF13332	
SW-04	National	LF13331	
SW-05	AD	ADG200	
	Harris	HI200	
	Intersil	IH200	
	MicroPwr	MP200	
	Siliconix	DG200	
SW7510	AD	AD7510	
	MicroPwr	MP7510	
SW7511	AD	AD7511	
	MicroPwr	MP7511	

Raytheon Semiconductor

Manufacturer Device	Replacement Source	Device	IC Master Page
◆29610	AMD	AM27S12	
	Fairchild	93436	
	Harris	HM7620	
	MMI	6305-1	
		63S240	**4026**
	National	**DM74S570**	**4057**
	Signetics	N82S130	
29611	AMD	AM27S13	
	Fairchild	93446	
	Harris	HM7621	
	Intel	3622	
	MMI	6306-1	
		63S241	**4026**
	Motorola	**MCM7621**	**4047**
	National	**DM74S571**	**4057**
	Signetics	N82S131	
	TI	SN74S571	
◆29620	AMD	AM27S28	
	Fujitsu	MB7123	
	MMI	6348-1	
	National	**DM74S473**	**4057**
		(Continued)	
◆29620	Signetics	N82S146	
	TI	**TBP28SA42**	**4245**
29621	AMD	AM27S29	
	Fujitsu	MB7124	
	Harris	HM7649	
	MMI	6349-1	
	Motorola	**MCM7649**	**4047**
	National	**DM74S472**	**4057**
	Signetics	N82S147	
	TI	**TBP28S42**	
			542,4244
		TBP28S42M	
			542,4244
◆29624	AMD	AM27S30	
	Fairchild	93438	
	Harris	HM7640	
	MMI	6340-1	
	National	**DM74S475**	**4057**
		DM77S475	
		DM87S475	
	Signetics	N82S140	
	TI	**TBP28SA46**	**4245**
◆29625	AMD	AM27S31	
	Fairchild	93448	
	Fujitsu	MB7126	
	Harris	HM7641	
	MMI	6341-1	
	Motorola	**MCM7641**	**4047**
	National	**DM74S474**	**4057**
	Signetics	N82S141	
	TI	**TBP28S46**	
			542,543,4245
◆29630	AMD	AM27S180	
		AM27S280	
	Fairchild	93450	
		93Z450	
	Fujitsu	MB7131	
	Hitachi	HN25088	
	Intel	3608	
	MMI	6380-1	
	National	**DM87S180**	**4057**
		DM87S229	
	NEC	μPB408	
	Signetics	N82S180	
	TI	TBP28SA86	
29631	AMD	AM27PS181	
		AM27S181	
		AM27S281	
	Fairchild	93Z451	
		F93451	
	Fujitsu	MB7132	
	Harris	HM7681	
	Hitachi	HN25089	
	Intel	3628	
		3628A	
		3628B	
	MMI	6381-1	
	Motorola	**MCM7681**	**4047**
	National	**DM87S181**	**4057**
		DM87S228	
	NEC	μPB417	
	Raytheon	**29631A**	**4131**
		29633	
	Signetics	825181	
		N82HS181	
		N82S181	
	Supertex	SM82S181	
	TI	TBP28S86	
29631A	AMD	AM27PS181	
		AM27S181	
		AM27S281	
	Fairchild	93Z451	
		F93451	
	Fujitsu	MB7132	
	Harris	HM7681	
	Hitachi	HN25089	
	Intel	3628	
		3628A	
		3628B	
	MMI	6381-1	
	Motorola	**MCM7681**	**4047**
	National	**DM87S181**	**4057**
		DM87S228	
	NEC	μPB417	
	Raytheon	29631	
		29633	
	Signetics	825181	
		N82HS181	
		N82S181	
	Supertex	SM82S181	
	TI	TBP28S86	
29631AM	**AMD**	**AM27S181M**	**3905**
	Fairchild	93451M	
	Fujitsu	MB7132-W	
		MB7132E-W	
	Harris	**HM7681-2**	**3949**
	MMI	5381-1	
	National	**DM77S181**	**4057**
	Signetics	S82HS181	
		S82S181	**532**
	TI	TBP28S86M	
29633	AMD	AM27PS181	
		AM27S181	
		AM27S281	
	Fairchild	93Z451	
		F93451	
	Fujitsu	MB7132	
	Harris	HM7681	
	Hitachi	HN25089	
	Intel	3628	
		3628A	
		3628B	
	MMI	6381-1	
	Motorola	**MCM7681**	**4047**
	National	**DM87S181**	**4057**
		DM87S228	
	NEC	μPB417	
	Raytheon	29631	
		29631A	**4131**
	Signetics	825181	
		N82HS181	
		N82S181	
	Supertex	SM82S181	
	TI	TBP28S86	
◆29635	Harris	HM7608	
	Signetics	N82S2708	
		S82S2708	**532**
	TI	**TBP28S2708**	**4248**
◆29640	AMD	AM27S32	
	Fairchild	93452	
	Fujitsu	MB7121	
	Harris	HM7642	
	Hitachi	HN25044	
	MMI	6352-1	
	Motorola	MCM7642	
	National	**DM74S572**	**4057**
	NEC	μPB406	
	Signetics	N82S136	
	TI	**TBP24SA41**	**4239**
◆29641	AMD	AM27S33	
	Fairchild	93453C	
	Fujitsu	MB7122	
	Harris	HM7643	
		HM7643A	
	MMI	5353-1	
		6353-1	
	Motorola	**MCM7643**	**4047**
	National	**DM74S573**	**4057**
	Signetics	N72HS137	
		N82S137	**4172**
		S82S195	**4182**
	TI	**TBP24S41**	
			542,4239
◆29643	AMD	AM27PS41	
◆29650	AMD	AM27S184	
	Fujitsu	MB7127	
	Harris	HM7684	
	Hitachi	HM25045	
	MMI	6388	
		6388-1	
	National	**DM87S184**	**4057**
	Signetics	N82S184	
	TI	**TBP24SA81**	**4240**
29651	AMD	AM27S185	
	Fujitsu	MB7128	
	Harris	HM7685	
	Hitachi	HN25085	
	MMI	6389	
		6389-1	
		63S841	**4026**
	Motorola	**MCM7685**	**4047**
	National	**DM87S185**	**4057**
	Raytheon	**29651A**	**4131**
	Signetics	N82HS185	
		N82S185	
	TI	**TBP24S81**	
			542,4239
29651A	AMD	AM27S185	
	Fujitsu	MB7128	
	Harris	HM7685	
	Hitachi	HN25085	
	MMI	6389	
		6389-1	
		(Continued)	
29651A	**MMI**	**63S841**	**4026**
	Motorola	**MCM7685**	**4047**
	National	**DM87S185**	**4057**
	Raytheon	29651	
	Signetics	N82HS185	
		N82S185	
	TI	**TBP24S81**	
			542,4239
29651AM	Fujitsu	MB7128E-W	
	Harris	**HM7685-2**	**3950**
	MMI	5389	
		5389-1	
	National	**DM77S185**	**4057**
	Signetics	S82HS185	
		S82S185	**532**
	TI	SN54S454	
		TBP24S81M	
			542,4239
29653	AMD	AM27PS185	
	Fujitsu	MB7134	
		MB7152	
	Harris	HM76165	
	MMI	**63S441**	**4026**
	Motorola	**MCM76165**	**4047**
	NEC	μPB426	
	Signetics	N82HS195	
		N82S195	**4182**
◆29660	AMD	AM27S20	
	Fairchild	93417	
	Harris	HM7610	
	MMI	6300-1	
		63S140	**4026**
	National	**DM74S387**	**4057**
	Signetics	N82S126	
	TI	**TBP24SA10**	
			542,4238
29670	Fujitsu	MB7141	
	Signetics	N82320	
29671	**AMD**	**AM27S43**	**3908**
	Fujitsu	MB7142	
	Harris	76321	
		HM76321	
	Intel	3632	
	MMI	**53S3281**	**4026**
		63S3281	**4026**
	National	87S321	
		DM87S321	**4057**
	Signetics	N82S321	
◆29680	AMD	AM27S190	
	Fairchild	93510	
		93Z510	
	Fujitsu	MB7137	
		MB7137E-W	
	Harris	HM76160	
	Hitachi	HN25168	
	MMI	**63S1681**	**4026**
	Motorola	MCM6160	
	National	**DM87S190**	**4057**
	NEC	μPB409	
	Raytheon	**29683**	**4131**
	Signetics	N82S190	
	TI	TBP28SA166	
29681	AMD	AM27PS191	
		AM27S191	
	Fairchild	93511	
		93Z511	
	Fujitsu	MB7138	
		MB7138E-W	
	Harris	HM76161	
	Hitachi	HN25169	
	MMI	**63S1681**	**4026**
	Motorola	**MCM76161**	**4047**
	National	**DM87S191**	**4057**
	NEC	μPB429	
	Raytheon	**29681A**	**4131**
	Signetics	N82S191	
	TI	**TBP28S166**	**4247**
29681A	AMD	AM27PS191	
		AM27S191	
	Fairchild	93511	
		93Z511	
	Fujitsu	MB7138	
		MB7138E-W	
	Harris	HM76161	
	Hitachi	HN25169	
	MMI	**63S1681**	**4026**
	Motorola	**MCM76161**	**4047**
	National	**DM87S191**	**4057**
	NEC	μPB429	
	Raytheon	**29681**	**4131**
	Signetics	N82S191	
	TI	**TBP28S166**	**4247**

◆ Discontinued

Bold face device numbers indicate manufacturers data is provided in the IC Master on the pages noted.

© IC MASTER 1984

Raytheon Semiconductor (Cont'd)

Manufacturer Device	Replacement Source	Device	IC Master Page
29683	AMD	AM27S190	
	Fairchild	93510	
		93Z510	
	Fujitsu	MB7137	
		MB7137E-W	
	Harris	HM76160	
	Hitachi	HN25168	
	MMI	**63S1681**	**4026**
	Motorola	MCM6160	
	National	**DM87S190**	**4057**
	NEC	μPB409	
	Signetics	N82S190	
	TI	TBP28SA166	
54LS192	Fairchild	54LS192	
	Motorola	SN54LS192	
	National	DM54LS192	
	Signetics	**54LS192**	**530**
	TI	**SN54LS192**	**990**
DAC-08	AMD	AM1408	
		SSS1408	
	AD	AD1408	
		ADDAC-08	
	Datel	DAC-08B	
		DAC-I8BC	
		DAC-IC8B	
		DAC-IC8BC	**2863**
	Fairchild	DAC-08	
		MA0802M	
		μA0801	
		μA0802	
	Motorola	**DAC-08**	**3069**
		MC1408	
	National	DAC0800	
		DAC0801	
		DAC0802	
		DAC0806	
		DAC0807	
		DAC0808	
	NEC	μPC624	
	PMI	DAC-08	
		DAC-1408	
	Signetics	MC1408	
DAC-10	**Datel**	**DAC-IC10B**	**2863**
	PMI	DAC-10	
DAC-565	PMI	DAC-565	
DAC-6012	AMD	AM6012	
	AD	AD562	
	Burr-Brown	DAC862	
	Datel	DAC-562	
	Harris	HI562	
	MCE	MCE-6012	
	MicroPwr	MP562	
	Motorola	**AD562**	**3069**
	NEC	μPC6012	
		μPC648	
	PMI	DAC-312	
		DAC312B12	
	Raytheon	DAC6012	
	Signetics	**AM6012**	**3605**
	TeledyneP	4068	
DAC6012	AMD	AM6012	
	AD	AD562	
	Burr-Brown	DAC862	
	Datel	DAC-562	
	Harris	HI562	
	MCE	MCE-6012	
	MicroPwr	MP562	
	Motorola	**AD562**	**3069**
	NEC	μPC6012	
		μPC648	
	PMI	DAC-312	
		DAC312B12	
	Raytheon	DAC-6012	
	Signetics	**AM6012**	**3605**
	TeledyneP	4068	
HA4741	AMD	LM348	
	Exar	**XR4212**	**3378**
	Fairchild	μA348	
	Harris	HA-4741	
	MicroPwr	MP5511	
	Motorola	MC4741	
	National	LM348	
	NEC	μPC4741	
	PMI	OP-11	
	Raytheon	LM348	
		RC4156	
	TI	LM348	

(Continued)

Manufacturer Device	Replacement Source	Device	IC Master Page
HA4741	Thomson-CSF		
		TDB0111	
		TDB0148	
LH2101	AMD	LH2101	
	Intersil	LH2101	
	National	LH2101	
LH2111	AMD	LH2111	
	Intersil	LH2111	
	National	LH2111	
LH2201	AMD	LH2201	
	National	LH2201	
LM101	AMD	LM101	
	AD	AD101	
	Fairchild	μA101	
	Intersil	AD101	
	LinearTech	LM101	
	Motorola	LM101	
	SiliconG	SG101	
	TI	LM101	
	Thomson-CSF		
		SFC2101	
LM107	AMD	LM107	
	AD	**AD741S**	**3351**
	Intersil	LM107	
	LinearTech	LM107	
	National	LM107	
	SiliconG	SG107	
	TI	LM107	
	Thomson-CSF		
		SFC2107	
LM111	AMD	LM111	
	AD	AD111	
	Fairchild	μA111	
	Intersil	LM111	
	Motorola	LM111	
	National	LM111	
	Signetics	LM111	
	SiliconG	SG111	
	TI	LM111	
	Thomson-CSF		
		SFC2111	
◆LM124A	AMD	LM124A	
	Motorola	LM124A	
	National	LM124A	
	RCA	CA124A	
	Signetics	LM124A	
	SiliconG	SG124	
	TI	LM124A	
LM13600	Exar	XR13600	
	National	LM13600	
	PMI	LM13600	
LM139	AMD	LM139	
	Fairchild	μA139	
	Motorola	LM139	
	National	LM139	
	PMI	CMP-04	
		PM139	
	RCA	**CA139**	**3599**
	Signetics	LM139	
	SiliconG	SG139	
	TI	LM139	
LM146	**Exar**	**XR146**	**3377**
	National	LM140	
LM146-2	National	LM146-2	
LM148	AMD	LM148	
	National	LM148	
	Raytheon	RM4156	
	TI	LM148	
LM224	AMD	LM224	
	Fairchild	μA224	
	Motorola	LM224	
	National	LM224	
	RCA	CA224	
	Signetics	LM224	
	SiliconG	SG224	
	TI	LM224	
	Thomson-CSF		
		TDE0124	
LM239	AMD	LM239	
	Fairchild	μA239	
	Motorola	LM239	
	National	LM239	
	PMI	CMP-04	
		PM239	
	RCA	**CA239**	**3599**
	Signetics	LM239	
	SiliconG	SG239	
	TI	LM239	
	Thomson-CSF		
		TDE0139	

Manufacturer Device	Replacement Source	Device	IC Master Page
LM246	**Exar**	**XR246**	**3377**
	National	LM246	
	Thomson-CSF		
		TDE0146	
LM2900	Hitachi	HA17301	
	Motorola	LM2900	
		MC3301	
	National	LM2900	
		LM3301	
	Raytheon	RC3301	
	TI	LM2900	
LM2901	Fairchild	μA2901	
		μA3302	
	Motorola	LM2901	
		MC3302	
	National	LM2901	
		LM3302	
	NEC	μPC2901	
	PMI	CMP-04	
	Raytheon	RC3302	
	RCA	CA3302	
	Signetics	LM2901	
		MC3302	
	SiliconG	SG3302	
	TI	LM2901	
		LM3302	
LM2902	Fairchild	μA2902	
	Hitachi	HA17902	
	Motorola	LM2902	
	National	LM2902	
	NEC	μPC2902	
	TI	LM2902	
LM301	AD	AD301	
	Fairchild	μA301A	
	Intersil	AD301	
	LinearTech	LM301	
		LM301A	
	Motorola	LM301	
	National	LM301	
		LM301A	
	NEC	μPC157	
		μPC301	
	RCA	CA301	
		LM301	
	SiliconG	**SG301**	
	TI	LM301	
		LM301A	
	Thomson-CSF		
		SFC2301	
	Toshiba	TA7506	
LM307	AMD	LM307	
	AD	**AD741J**	**3351**
	Intersil	LM307	
	LinearTech	LM307	
	Motorola	LM307	
	National	LM307	
	RCA	CA307	
	SiliconG	SG307	
	TI	LM307	
	Thomson-CSF		
		SFC2307	
LM308	AMD	LM308	
	AD	**AD308**	**3351**
	Burr-Brown	3500	
		3501	
	Fairchild	μA308	
	Intersil	AD308	
		LM308	
	MicroPwr	MP5505	
		MPLM308	**3529**
	Motorola	LM308	
	National	LM308	
	SiliconG	SG308	
	Thomson-CSF		
		SFC2308	
LM311	AMD	LM311	
	AD	AD311	
	Fairchild	μA2903	
		μA311	
	Intersil	LM311	
	Motorola	LM2903	
		LM311	
	National	LM2903	
		LM311	
	NEC	μPC271	
		μPC311	
	RCA	**CA311**	**3598**
		LM311	
	Signetics	LM2903	
		LM311	
	SiliconG	SG311	
	TI	LM2903	

(Continued)

Manufacturer Device	Replacement Source	Device	IC Master Page
LM311	TI	LM311	
	Thomson-CSF		
		SFC2311	
		SFC3111	
LM324	AMD	LM324	
	Exar	**XR3403**	**3378**
		XR3403C	
	Fairchild	μA324	
		μA3403	
	Motorola	LM324	
		MC3403	
	National	LM324	
	NEC	μPC324	
	Raytheon	RC3403	
		RC4137	
	RCA	CA324	
		LM324	
	Sanyo	LA6324	
	Signetics	LM324	
		MC3403	
	SiliconG	SG324	
	TI	LM324	
		MC3403	
	Thomson-CSF		
		TDB0124	
LM339	AMD	LM339	
		LM339A	
	Fairchild	μA339	
	Hitachi	HA17901	
	Motorola	LM339	
	National	LM339	
	NEC	μPC339	
	PMI	CMP-04	
		PM339A	
	RCA	**CA339**	**3599**
		CA339A	**3599**
		LM339	
	SiliconG	SG339	
	TI	LM339	
	Thomson-CSF		
		TDB0139	
LM346	**Exar**	**XR346**	**3377**
	National	LM346	
	Thomson-CSF		
		TDB0146	
LM348	AMD	LM348	
	Exar	**XR4212**	**3378**
	Fairchild	μA348	
	Harris	HA-4741	
	MicroPwr	MP5511	
	Motorola	MC4741	
	National	LM348	
	NEC	μPC4741	
	PMI	OP-11	
	Raytheon	HA4741	
		RC4156	
	TI	LM348	
	Thomson-CSF		
		TDB0111	
		TDB0148	
LM3900	Motorola	MC3401	
	National	LM3401	
		LM3900	
	Raytheon	RC3401	
	RCA	CA3401	
	TI	LM3900	
OP-07	AD	AD-OP07	
		OP-07	
	Harris	HA-OP07	
	LinearTech	OP-07	
	PMI	**OP-07**	**3566**
	TI	OP-07	
OP-27	Datel	AM-427	
	LinearTech	OP-27	
	MicroPwr	**MP5527**	**3529**
		OP-27	**3529**
	PMI	OP-27	
OP-37	Burr-Brown	OPA37	
	PMI	OP-34	
RC1458	**AMD**	**AM1458**	
	Exar	XR1458	
		XR4558	
	Fairchild	μA1458	
	Harris	HA-2655	
	Hitachi	HA17458	
	MicroPwr	MPOP14	
	Motorola	MC1458	
		MC4558C	
		RC4558	
	National	LM1458	
	NEC	μPC1458	
		μPC4558	

(Continued)

◆ Discontinued

The manufacturers report their devices can be used as direct replacements.
Performance details often differ, so compare the specifications considering your requirements.

Raytheon Semiconductor (Cont'd)

Manufacturer Device	Replacement Source	Device	IC Master Page
RC1458	PMI	PM1458	
	Raytheon	**RC4558**	**3592**
	RCA	CA1458	
		LM1458	
		RC4558	
		SSS1458	
	Sanyo	LA6458A	
	Signetics	MC1458	
		NE4558	
	SiliconG	SG1458	
	TI	MC1458	
		RC4558	
RC1558	AMD	AM1558	
	Exar	XR1558	
	Fairchild	μA1558	
	Harris	**HA-2650**	**3414**
	Motorola	MC1558	
		MC4558	
		RC1558	
	National	LM1558	
	PMI	**OP-14**	**3566**
		PM1558	
	Raytheon	RM1558	
		RM4558	
	RCA	CA1558	
		LM1558	
		SSS1558	
	Signetics	MC1558	
	SiliconG	SG1558	
	TI	MC1558	
		RM4558	
RC3078	**RCA**	**CA3078**	**3597**
RC3301	Hitachi	HA17301	
	Motorola	LM2900	
		MC3301	
	National	LM2900	
		LM3301	
	Raytheon	LM2900	
	TI	LM2900	
RC3302	Fairchild	μA2901	
		μA3302	
	Motorola	LM2901	
		MC3302	
	National	LM2901	
		LM3302	
	NEC	μPC2901	
	PMI	CMP-04	
	Raytheon	LM2901	
	RCA	CA3302	
	Signetics	LM2901	
		MC3302	
	SiliconG	SG3302	
	TI	LM2901	
		LM3302	
RC3401	Motorola	MC3401	
	National	LM3401	
		LM3900	
	Raytheon	LM3900	
	RCA	CA3401	
	TI	LM3900	
RC3403	AMD	LM324	
	Exar	**XR3403**	**3378**
		XR3403C	
	Fairchild	μA324	
		μA3403	
	Motorola	LM324	
		MC3403	
	National	LM324	
	NEC	μPC324	
	Raytheon	LM324	
		RC4137	
	RCA	CA324	
		LM324	
	Sanyo	LA6324	
	Signetics	LM324	
		MC3403	
	SiliconG	SG324	
	TI	LM324	
		MC3403	
	Thomson-CSF	TDB0124	
RC3503	**Exar**	**XR3503**	**3378**
	Motorola	MC3503	
	Raytheon	RM3503	
		RM4137	
	Signetics	MC3503	
	SiliconG	SG3503	
	TI	MC3503	
RC4136	Exar	XR4136	
	Fairchild	μA4136	
	MicroPwr	MP5509	
	PMI	OP-09	
		PM4136	
	SiliconG	SG4136C	
	TI	RC4136	
RC4137	AMD	LM324	
	Exar	**XR3403**	**3378**
		XR3403C	
	Fairchild	μA324	
		μA3403	
	Motorola	LM324	
		MC3403	
	National	LM324	
	NEC	μPC324	
	Raytheon	LM324	
		RC3403	
	RCA	CA324	
		LM324	
	Sanyo	LA6324	
	Signetics	LM324	
		MC3403	
	SiliconG	SG324	
	TI	LM324	
		MC3403	
	Thomson-CSF	TDB0124	
RC4151	**Exar**	**XR4151**	**3385**
	~~Raytheon~~	~~RM4151~~	
		RV4151	
	TI	XR4151	
RC4152	TI	XR4152	
RC4156	AMD	LM348	
	Exar	**XR4212**	**3378**
	Fairchild	μA348	
	Harris	HA-4741	
	MicroPwr	MP5511	
	Motorola	MC4741	
	National	LM348	
	NEC	μPC4741	
	PMI	OP-11	
	Raytheon	HA4741	
		LM348	
	TI	LM348	
	Thomson-CSF	TDB0111	
		TDB0148	
RC4194	Exar	XR4194	
	MCE	MCE-4194	
	Raytheon	RM4194	
	SiliconG	SG4194	
RC4195	Exar	XR1468	
		XR4195	
	Motorola	MC1468	
	SiliconG	SG1468	
		SG2501A	
		SG3501A	
		SG4501	
RC4444	**Motorola**	**MC3416**	**3060**
RC4531	Signetics	NE531	
RC4558	AMD	AM1458	
	Exar	XR1458	
		XR4558	
	Fairchild	μA1458	
	Harris	HA-2655	
	Hitachi	HA17458	
	MicroPwr	MPOP14	
	Motorola	MC1458	
		MC4558C	
		RC4558	
	National	LM1458	
	NEC	μPC1458	
		μPC4558	
	PMI	PM1458	
	Raytheon	RC1458	
	RCA	CA1458	
		LM1458	
		RC4558	
		SSS1458	
	Sanyo	LA6458A	
	Signetics	MC1458	
		NE4558	
	SiliconG	SG1458	
	TI	~~MC1458~~	
		~~RC4558~~	
RC4739	**Exar**	**XR4739**	**3378**
	Fairchild	μA739	
		μA749	
	National	LM1303	
	SGS	TBA231	
		(Continued)	
RC4739	TI	SN76131	
		SN76149	
RC4805	PMI	CMP-05	
RC5534	**Datel**	**AM-453-2C**	**2864**
	Exar	**XR5534**	**3379**
	Signetics	NE5534	
		NE5534A	**3646**
	TI	NE5534	
		NE5534A	
RC555	Cherry	CS555	
	Exar	XR555	
	Fairchild	μA555	
	Hitachi	HA17555	
	Motorola	MC1455	
	National	LM555	
	NEC	μPC1555	
	RCA	CA355	
		CA555	**3604**
	Sanyo	LB8555	
	Signetics	NE555	
	SiliconG	SG555	
	TI	NE555	
RC556	AMD	LM556	
	Exar	XR556	
		XR556M	
	Fairchild	μA556	
	Motorola	MC3456	
		MC3556	
	National	LM556	
	Raytheon	RM556	
	Signetics	NE556	
		SE556	**526**
	SiliconG	SG556	
	TI	NE556	
		SE556	
RC709	Fairchild	μA709	
	Hitachi	HA1303	
	Motorola	MC1709	
	National	LM1709	
		LM709	
	NEC	μPC255	
		μPC55	
	Raytheon	RM709	
	RCA	CA3038	
	TI	μA709	
	Thomson-CSF	SFC2709	
	Toshiba	TA7502	
RC723	Fairchild	μA723	
	Hitachi	HA17723	
	Intersil	LM723	
	Motorola	**MC1723**	**3532**
	National	LM723	
	Raytheon	RM723	
	RCA	**CA723**	**3602**
		LM723	
	SGS	L123	
	Signetics	μA723	
	SiliconG	SG723	
	TI	μA723	
	Thomson-CSF	SFC2723	
RC725	AMD	LM108	
	AD	**AD108**	**3351**
	Fairchild	μA108	
		μA725	
	Intel	ISBC108	
	Intersil	ICL108	
		LM108	
	LinearTech	LM108	
		LM108A	
		OP-05	
	MicroPwr	MP5501	
		MP5505	
		MPLM108A	
		OP-08	
	Motorola	LM108	
	National	LM108	
		LM108A	
	NEC	μPC154	
	PMI	OP-01	
		OP-05	**3566**
		OP-06	
		OP-07	**3566**
		PM108	
		PM725	
	~~Raytheon~~	~~OP-05~~	~~3592~~
		~~OP-07~~	~~3592~~
		RM725	
	Signetics	LM108	
RC741	**AD**	**AD741**	**3351**
	Fairchild	3871	
		(Continued)	
RC741	Fairchild	μA741	
	Hitachi	HA17741	
	Intersil	AD741	
		ICL741	
	MicroPwr	MP5501	
		MP5502	**3529**
		OP-02	**3529**
	Mostek	MK3871	
	Motorola	LM741	
		MC1741	
	National	LM741	
	NEC	μPC151	
		μPC741	
	PMI	OP-01	
		OP-02	**3566**
		PM741	
		SSS741	
	Raytheon	RM741	
	RCA	CA3056	
		CA741	
	Signetics	μA741	
	SiliconG	SG300	
		SG741	
	TI	μA741	
	Thomson-CSF	SFC2741	
	Toshiba	TA7504	
RC747	AMD	747	
	Fairchild	μA747	
	~~Hitachi~~	~~HA17747~~	
	MicroPwr	MPOP04	
	Motorola	MC1747	
	National	LM747	
	NEC	μPC251	
	PMI	**OP-04**	**3566**
		PM747	
	Raytheon	RM747	
	RCA	CA747	
	Signetics	μA747	
	SiliconG	SG747	
	TeledyneS	747	
	TI	μA747	
RC7523	Motorola	MC7523	
	National	LM7523	
	SiliconG	SG7523	
	TI	SN7523	
RC7528	Motorola	MC7528	
	SiliconG	SG7528	
	TI	SN7528	
	Thomson-CSF	SFC2528	
RC7529	Fairchild	7529	
	Motorola	MC7529	
	National	LM7529	
	SiliconG	SG7529	
RC8202	Signetics	N8202	
RC8230	Fairchild	9312	
	National	DM8312	
	Raytheon	RC9312	
	Signetics	N8230	
	TI	SN29312	
RC8233	Signetics	N8233	
RC8234	Signetics	N8234	
RC8242	Fairchild	74LS266	
	Motorola	SN74LS266	
	National	DM74LS266	
	SGS	T74LS266	
	Signetics	74LS266	
		N8242	**876**
	TI	**SN74LS266**	**1007**
RC8243	Signetics	N8243	
RC8250	Signetics	N8250	
RC8252	Fairchild	9031	
		9301	
	National	DM8301	
		DM9301	
	Raytheon	RM8252	
	Signetics	N8252	
		S8252	
	TI	SN29301	
		SN39301	
RC8262	**Signetics**	**N8262**	**876**
RC8266	**Signetics**	**N8266**	**876**
~~RC8270~~	~~TI~~	~~SN74178~~	~~984~~
~~RC8271~~	~~Fairchild~~	~~74179~~	
	Signetics	**N8271**	**876**
	TI	**SN74179**	**985**
RC8273	**Signetics**	**N8273**	**876**
RC8274	**Signetics**	**N8274**	**876**
RC8277	Fairchild	9328	
	Signetics	N8277	

◆ Discontinued

Bold face device numbers indicate manufacturers data is provided in the IC Master on the pages noted.

© IC MASTER 1984

Raytheon Semiconductor (Cont'd)

Manufacturer Device	Replacement Source	Device	IC Master Page
RC8280	Fairchild	74176	
		96176	
	National	DM74176	
		DM8280	
	Signetics	74176	
		N8280	
	TI	**SN74176**	**984**
RC8281	Fairchild	74177	
	National	DM74177	
		DM8281	
	Signetics	74177	
		N8281	
	TI	**SN74177**	**984**
RC8290	Fairchild	74196	
	National	DM74196	
		DM8290	
	Signetics	74196	
	TI	**SN74196**	**991**
RC8291	Fairchild	74197	
	National	DM74197	
		DM8291	
	Signetics	74197	
	TI	**SN74197**	**992**
RC8T09	**Signetics**	**N8T09**	**876**
RC8T10	Fairchild	74173	
	National	DM74173	
		DM8551	
	Signetics	**N8T10**	**876**
	TI	**SN74173**	**982**
RC8T20	**Signetics**	**N8T20**	**876**
◆RC930	Fairchild	930	
		9930	
	Motorola	MC830	
		MC930	
	National	DM930	
	Raytheon	RM930	
RC9304	Fairchild	9304	
	Raytheon	RM9304	
RC9308	Fairchild	9308	
	TI	SN29308	
	SN74116	**960**	
RC9311	Fairchild	9311	
	Hitachi	HD74154	
	National	DM7213	
		DM74154	
		DM8311	
	Signetics	**74154**	**861**
	TI	SN29311	
	SN74154	**973**	
RC9312	Fairchild	9312	
	National	DM8312	
	Raytheon	RC8230	
	Signetics	N8230	
	TI	SN29312	
RC9316	Fairchild	9316	
	TI	SN29316	
◆RC932	Fairchild	932	
		9932	
	Motorola	MC932	
	National	DM932	
	Raytheon	RM932	
RC9322	National	DM8322	
	TI	SN29322	
◆RC933	Fairchild	933	
		9933	
	Motorola	MC933	
	National	DM933	
◆RC934	Motorola	MC934	
	Raytheon	RM934	
	TI	SN15934	
RC9341	Fairchild	9341	
	Hitachi	HD74181	
	National	DM74181	
	Signetics	**74181**	**861**
	TI	**SN74181**	**985**
◆RC935	Fairchild	9135	
		9935	
	Motorola	MC835	
		MC935	
	National	DM935	
◆RC936	Fairchild	936	
		9936	
	Motorola	MC936	
	National	DM936	
RC9360	Fairchild	74192	
		9360	
	National	DM74192	
		DM8560	
		(Continued)	

Manufacturer Device	Replacement Source	Device	IC Master Page
RC9360	**Signetics**	**74192**	**861**
	TI	**SN74192**	**990**
◆RC937	Fairchild	937	
		9937	
	Motorola	MC837	
		MC937	
	National	DM937	
◆RC941	Motorola	MC841	
◆RC944	Fairchild	944	
		9944	
	Motorola	MC944	
	National	DM944	
◆RC945	Fairchild	945	
		9945	
	Motorola	MC945	
	National	DM945	
◆RC946	Fairchild	946	
		9946	
	Motorola	MC946	
	National	DM946	
◆RC948	Fairchild	948	
		9948	
	Motorola	MC948	
	National	DM948	
◆RC949	Fairchild	949	
	Motorola	MC949	
	National	DM949	
	Raytheon	RM949	
◆RC950	Fairchild	950	
		9950	
	Motorola	MC950	
◆RC951	Fairchild	951	
		9951	
	Motorola	MC851	
		MC852	
		MC951	
	Raytheon	RM951	
	TI	SN15851	
		SN15951	
◆RC957	Fairchild	9157	
	Motorola	MC857	
		MC957	
	National	DM9567	
		DM957	
	Raytheon	RM957	
◆RC958	Fairchild	9158	
	Motorola	MC858	
		MC958	
	National	DM958	
	Raytheon	RM958	
◆RC961	Fairchild	961	
		9961	
	Motorola	MC961	
	National	DM961	
◆RC962	Fairchild	962	
		9962	
	Motorola	MC962	
	National	DM962	
◆RC963	Fairchild	963	
		9963	
	Motorola	MC963	
	National	DM963	
	Raytheon	RM963	
◆RC993	Fairchild	9093	
	Motorola	MC853	
		MC953	
	National	DM9093	
	Raytheon	RM993	
	TI	SN158093	
		SN159093	
◆RC994	Fairchild	9094	
	Motorola	MC856	
		MC956	
	National	DM9094	
	Raytheon	RM9094	
		RM994	
	TI	SN158094	
		SN159094	
◆RC997	Fairchild	9097	
	Motorola	MC855	
		MC955	
	National	DM9097	
	Raytheon	RM997	
	TI	SN158097	
		SN159097	
REF-01	HybridSys	HSREF01	
	MicroPwr	**MP5532**	**3529**
		REF-01	
	Motorola	**MC1404-10**	**3535**
		MC1504-10	**3535**
	PMI	REF-01	
	TeledyneS	9496	

Manufacturer Device	Replacement Source	Device	IC Master Page
REF-02	**Motorola**	**MC1404-5**	**3535**
	PMI	REF-02	
REF-03	PMI	REF-03	
RF8601	Fairchild	74122	
		9601	
	National	DM8601	
		DM9601	
	Raytheon	RF9601	
	Signetics	**N8T22**	**876**
		S8T22	
	TI	**SN74122**	**961**
RF8602	Fairchild	9602	
	National	DM8602	
		DM9602	
	Raytheon	RF9602	
	TI	SN39602	
RF9601	Fairchild	74122	
		9601	
	National	DM8601	
		DM9601	
	Raytheon	RF8601	
	Signetics	**N8T22**	**876**
		S8T22	
	TI	**SN74122**	**961**
RF9602	Fairchild	9602	
	National	DM8602	
		DM9602	
	Raytheon	RF8602	
	TI	SN39602	
RM1488	AMD	MC1488	
	Exar	**XR1488**	**3384**
	Fairchild	μA1488	
	Hitachi	HD75188	
	Motorola	**MC1488**	**3064**
	National	DS1488	
	Signetics	MC1488	
	SiliconG	SG1488	
	TI	MC1488	
		SN75188	
RM1537	Motorola	MC1537	
RM1558	AMD	AM1558	
	Exar	XR1558	
	Fairchild	μA1558	
	Harris	**HA-2650**	**3414**
	Motorola	MC1558	
		MC4558	
		RC1558	
	National	LM1558	
	PMI	**OP-14**	**3566**
		PM1558	
	Raytheon	RC1558	
		RM4558	
	RCA	CA1558	
		LM1558	
		SSS1558	
	Signetics	MC1558	
	SiliconG	SG1558	
	TI	MC1558	
		RM4558	
RM3403	Exar	XR3403M	
RM3503	**Exar**	**XR3503**	**3378**
	Motorola	MC3503	
	Raytheon	RC3503	
		RM4137	
	Signetics	MC3503	
	SiliconG	SG3503	
	TI	MC3503	
RM4136	**Exar**	**XR4136M**	**3378**
	SiliconG	SG4136	
	TI	RM4136	
RM4137	**Exar**	**XR3503**	**3378**
	Motorola	MC3503	
	Raytheon	RC3503	
		RM3503	
	Signetics	MC3503	
	SiliconG	SG3503	
	TI	MC3503	
RM4139	Motorola	LM158	
	National	LM158A	
	RCA	CA158A	
	Signetics	LM158	
	TI	LM158	
RM4151	**Exar**	**XR4151**	**3385**
	Raytheon	RC4151	
		RV4151	
	TI	XR4151	
RM4152	TI	XR4152	
RM4156	AMD	LM148	
	National	LM148	
	Raytheon	LM148	
	TI	LM148	

Manufacturer Device	Replacement Source	Device	IC Master Page
RM4194	Exar	XR4194	
	MCE	MCE-4194	
	Raytheon	RC4194	
	SiliconG	SG4194	
RM4195	Exar	XR1568	
	Motorola	MC1568	
	SiliconG	SG1501A	
		SG1568	
RM4558	AMD	AM1558	
	Exar	XR1558	
	Fairchild	μA1558	
	Harris	**HA-2650**	**3414**
	Motorola	MC1558	
		MC4558	
		RC1558	
	National	LM1558	
	PMI	**OP-14**	**3566**
		PM1558	
	Raytheon	RC1558	
		RM1558	
	RCA	CA1558	
		LM1558	
		SSS1558	
	Signetics	MC1558	
	SiliconG	SG1558	
	TI	MC1558	
		RM4558	
RM5524	Fairchild	MC5524	
	Motorola	MC5524	
	National	LM5524	
	SiliconG	SG5524	
	TI	SN5524	
RM5534	**Datel**	**AM-453-2M**	**2864**
	Signetics	**SE5534**	**526**
		SE5534A	**526,3646**
RM555	Exar	XR555M	
	Motorola	MC1555	
	Signetics	**SE555**	**526**
	TI	SE555	
RM556	AMD	LM556	
	Exar	XR556	
		XR556M	
	Fairchild	μA556	
	Motorola	MC3456	
		MC3556	
	National	LM556	
	Raytheon	RC556	
	Signetics	NE556	
	Signetics	**SE556**	**526**
	SiliconG	SG556	
	TI	NE556	
		SE556	
RM709	Fairchild	μA709	
	Hitachi	HA1303	
	Motorola	MC1709	
	National	LM1709	
		LM709	
	NEC	μPC255	
		μPC55	
	Raytheon	RC709	
	RCA	CA3038	
	TI	μA709	
	Thomson-CSF	SFC2709	
	Toshiba	TA7502	
RM723	Fairchild	μA723	
	Hitachi	HA17723	
	Intersil	LM723	
	Motorola	**MC1723**	**3532**
	National	LM723	
	Raytheon	RC723	
	RCA	**CA723**	**3602**
		LM723	
	SGS	L123	
	Signetics	μA723	
	SiliconG	SG723	
	TI	μA723	
	Thomson-CSF	SFC2723	
RM725	**AMD**	**LM108**	
	AD	**AD108**	**3351**
	Fairchild	μA108	
		μA725	
	Intel	ISBC108	
	Intersil	ICL108	
		LM108	
	LinearTech	LM108	
		LM108A	
		OP-05	
	MicroPwr	MP5501	
		MP5505	
		MPLM108A	
		(Continued)	

◆ Discontinued

The manufacturers report their devices can be used as direct replacements.
Performance details often differ, so compare the specifications considering your requirements.

Raytheon Semiconductor (Cont'd)

Manufacturer Device	Replacement Source	Device	IC Master Page
RM725	MicroPwr	OP-08	
	Motorola	LM108	
	National	LM108	
		LM108A	
	NEC	μPC154	
	PMI	OP-01	
		OP-05	**3566**
		OP-06	
		OP-07	**3566**
		PM108	
		PM725	
	Raytheon	**OP-05**	**3592**
		OP-07	**3592**
		RC725	
	Signetics	LM108	
RM741	**AD**	**AD741**	**3351**
	Fairchild	3871	
		μA741	
	Hitachi	HA17741	
	Intersil	AD741	
		ICL741	
	MicroPwr	MP5501	
		MP5502	**3529**
		OP-02	**3529**
	Mostek	MK3871	
	Motorola	LM741	
		MC1741	
	National	LM741	
	NEC	μPC151	
		μPC741	
	PMI	OP-01	
		OP-02	**3566**
		PM741	
		SSS741	
	Raytheon	RC741	
	RCA	CA3056	
		CA741	
	Signetics	μA741	
	SiliconG	SG300	
		SG741	
	TI	μA741	
	Thomson-CSF		
		SFC2741	
	Toshiba	TA7504	
RM747	AMD	747	
	Fairchild	μA747	
	Hitachi	HA17747	
	MicroPwr	MPOP04	
	Motorola	MC1747	
	National	LM747	
	NEC	μPC251	
	PMI	**OP-04**	**3566**
		PM747	
	Raytheon	RC747	
	RCA	CA747	
	Signetics	μA747	
	SiliconG	SG747	
	TeledyneS	747	
	TI	μA747	
RM8202	Signetics	S8202	
RM8230	National	DM9312	
	Raytheon	RM9312	
	TI	SN39312	
RM8231	Signetics	S8231	
RM8241	Motorola	SN54LS386	
	National	DM54LS386	
	Signetics	S82S41	
	TI	**SN54LS386**	**1030**
RM8250	Signetics	S8250	
RM8252	Fairchild	9031	
		9301	
	National	DM8301	
		DM9301	
	Raytheon	RC8252	
	Signetics	N8252	
		S8252	
	TI	SN29301	
		SN39301	
RM8262	Signetics	S8262	
RM8266	Signetics	S8266	
RM8270	Fairchild	54178	
	Signetics	S8270	
	TI	**SN54178**	**984**
RM8271	Fairchild	54179	
	Signetics	S8271	
	TI	**SN54179**	**985**
RM8277	Signetics	S8277	
RM8280	Fairchild	54176	
	National	DM54176	
		(Continued)	

Manufacturer Device	Replacement Source	Device	IC Master Page
RM8280	Signetics	54176	
		S8280	
	TI	**SN54176**	**984**
RM8281	Fairchild	54177	
	National	DM54177	
		DM7281	
	Signetics	54177	
		S7281	
		S8281	
	TI	**SN54177**	**984**
RM8T09	**Signetics**	**S8T09**	**876**
RM8T10	Fairchild	54173	
	National	DM54173	
		DM7551	
	TI	**SN54173**	**982**
RM9094	Fairchild	9094	
	Motorola	MC856	
		MC956	
	National	DM9094	
	Raytheon	RM994	
	TI	SN158094	
		SN159094	
RM930	Fairchild	930	
		9930	
	Motorola	MC830	
		MC930	
	National	DM930	
RM9304	Fairchild	9304	
	Raytheon	RC9304	
RM9308	TI	SN39308	
RM931	TI	SN15931	
RM9310	Fairchild	54160	
		9310	
	National	DM54160	
	Signetics	**54160**	**861**
	TI	**SN54160**	**977**
RM9311	National	DM54154	
		DM9311	
	Signetics	**54154**	**528,861**
	TI	SN39311	
		SN54154	**973**
RM9312	National	DM9312	
	Raytheon	RM8230	
	TI	SN39312	
RM9316	National	DM9316	
	TI	SN39316	
RM932	Fairchild	932	
		9932	
	Motorola	MC932	
	National	DM932	
RM9322	National	DM9322	
	TI	SN39322	
RM934	Motorola	MC934	
	TI	SN15934	
RM9341	Fairchild	54181	
	National	DM54181	
	Signetics	**54181**	**861**
	TI	**SN54181**	**985**
RM9342	Fairchild	54182	
	National	DM54182	
	TI	**SN54182**	**986**
RM939	Fairchild	939	
	National	DM939	
RM941	Fairchild	9941	
	Motorola	MC941	
RM947	TI	SN15947	
RM949	Fairchild	949	
	Motorola	MC949	
	National	DM949	
RM951	Fairchild	951	
		9951	
	Motorola	MC851	
		MC852	
		MC951	
	TI	SN15851	
		SN15951	
RM952	Fairchild	9099	
	Motorola	MC952	
	Raytheon	RM999	
RM957	Fairchild	9157	
	Motorola	MC857	
		MC957	
	National	DM9567	
		DM957	
RM958	Fairchild	9158	
	Motorola	MC858	
		MC958	
	National	DM958	
RM963	Fairchild	963	
		9963	
	Motorola	MC963	
	National	DM963	

Manufacturer Device	Replacement Source	Device	IC Master Page
RM993	Fairchild	9093	
	Motorola	MC853	
		MC953	
	National	DM9093	
	TI	SN158093	
		SN159093	
RM994	Fairchild	9094	
	Motorola	MC856	
		MC956	
	National	DM9094	
	Raytheon	RM9094	
	TI	SN158094	
		SN159094	
RM997	Fairchild	9097	
	Motorola	MC855	
		MC955	
	National	DM9097	
	TI	SN158097	
		SN159097	
RM999	Fairchild	9099	
	Motorola	MC952	
	Raytheon	RM952	
RV4151	**Exar**	**XR4151**	**3385**
	Raytheon	RC4151	
		RM4151	
	TI	XR4151	
RV4156	TI	XR4156	
SP3724	Fairchild	FQ3724	
	Motorola	MQ3724	
	RCA	CA3724	
SP3725	Fairchild	FQ3725	
	Motorola	MQ3725	
	National	DH3725	
	RCA	CA3725	
XR2207	Exar	XR2207	
XR2211	Exar	XR2211	

RCA Solid State Division

Manufacturer Device	Replacement Source	Device	IC Master Page
CA080	TI	TL080	
CA081	Fairchild	μAF771	
	PMI	OP-16	
	TI	TL081	
	Thomson-CSF		
		TDB0351	
CA082	**Exar**	**XR082**	**3376**
	TI	TL082	
	Thomson-CSF		
		TDB0353	
CA083	**Exar**	**XR083**	**3376**
	TI	TL083	
CA084	**Exar**	**XR084**	**3377**
	Fairchild	μAF774	
	TI	TL084	
CA1190	Fairchild	TDA1194	
	Hitachi	HA1364	
	SGS	TDA1190	
		TDA1190Z	
		TDA3190	
	Sprague	ULN-2290	
CA124A	AMD	LM124A	
	Motorola	LM124A	
	National	LM124A	
	Signetics	LM124A	
	SiliconG	SG124	
	TI	LM124A	
CA1310	Exar	XR1310	
	Hitachi	HA1156	
	National	LM1310	
	Sanyo	LA3301	
		LA3350	
	Sprague	ULN-3810	
	TI	SN76115	
	Toshiba	TA7157	
CA1352	Motorola	MC1357	
	Sanyo	LA1352	
CA139	AMD	LM139	
	Fairchild	μA139	
	Motorola	LM139	
	National	LM139	
	PMI	CMP-04	
		PM139	
	Raytheon	LM139	
	Signetics	LM139	
	SiliconG	SG139	
	TI	LM139	
CA1391	Motorola	MC1391	
	National	LM1391	
CA1394	Motorola	MC1394	
	National	LM1394	
CA1398	Motorola	MC1398	

Manufacturer Device	Replacement Source	Device	IC Master Page
CA139A	AMD	LM139A	
	Motorola	LM139A	
	National	LM139A	
	PMI	CMP-04	
		PM139A	
	SiliconG	SG139A	
	TI	LM139A	
CA1458	AMD	AM1458	
	Exar	XR1458	
		XR4558	
	Fairchild	μA1458	
	Harris	HA-2655	
	Hitachi	HA17458	
	MicroPwr	MPOP14	
	Motorola	MC1458	
		MC4558C	
		RC4558	
	National	LM1458	
	NEC	μPC1458	
		μPC4558	
	PMI	PM1458	
	Raytheon	RC1458	
		RC4558	**3592**
	RCA	LM1458	
		RC4558	
		SSS1458	
	Sanyo	LA6458A	
	Signetics	MC1458	
		NE4558	
	SiliconG	SG1458	
	TI	MC1458	
		RC4558	
CA1524	**Exar**	**XR1524**	**3381**
	SiliconG	SG1524	
	Sprague	ULS-8124	
	TI	SG1524	
	Unitrode	**UC1524**	**3709**
CA1558	AMD	AM1558	
	Exar	XR1558	
	Fairchild	μA1558	
	Harris	**HA-2650**	**3414**
	Motorola	MC1558	
		MC4558	
		RC1558	
	National	LM1558	
	PMI	**OP-14**	**3566**
		PM1558	
	Raytheon	RC1558	
		RM1558	
		RM4558	
	RCA	LM1558	
		SSS1558	
	Signetics	MC1558	
	SiliconG	SG1558	
	TI	MC1558	
		RM4558	
CA158A	Motorola	LM158	
	National	LM158A	
	Raytheon	RM4139	
	Signetics	LM158	
	TI	LM158	
CA2002	Fairchild	TDA2002	
	National	LM2002	
		LM383	
	SGS	TBA2002	
	Sprague	ULN-3701	
		ULN-3702	
CA2004	SGS	TDA2004	
	Sprague	ULN-3702	
CA201	AMD	LM201	
	AD	AD201	
	Fairchild	μA201	
		μA748	
	Intersil	LM748	
		μA748	
	Motorola	LM201	
		MC1748	
	National	LM201	
		LM748	
	Plessey	SL748	
	RCA	CA748	
		LM748	
	SiliconG	SG201	
		SG748	
	TI	LM201	
		SN72748P	
		μA748	
	Thomson-CSF		
		SFC2201	
		SFC2748	
CA207	AMD	LM207	
	National	LM207	
		(Continued)	

♠ Discontinued

Bold face device numbers indicate manufacturers data is provided in the IC Master on the pages noted.

© IC MASTER 1984

RCA Solid State Division (Cont'd)

Manufacturer Device	Replacement Source	Device	IC Master Page
CA207	SiliconG	SG207	
	TI	SN55207	
	Thomson-CSF		
		SFC2207	
CA2111	Motorola	MC1357	
	National	LM2111	
	Signetics	N5111	
	Sprague	ULN-2111	
	TI	SN76642	
		SN76643	
CA2136	Fairchild	ULN-2136	
		μA2136	
	Motorola	MC1356	
	TI	SN76669	
CA224	AMD	LM224	
	Fairchild	μA224	
	Motorola	LM224	
	National	LM224	
	Raytheon	LM224	
	Signetics	LM224	
	SiliconG	SG224	
	TI	LM224	
	Thomson-CSF		
		TDE0124	
CA239	AMD	LM239	
	Fairchild	μA239	
	Motorola	LM239	
	National	LM239	
	PMI	CMP-04	
		PM239	
	Raytheon	LM239	
	Signetics	LM239	
	SiliconG	SG239	
	TI	LM239	
	Thomson-CSF		
		TDE0139	
CA239A	AMD	LM239A	
	Motorola	LM239A	
	National	LM239A	
	PMI	CMP-04	
	SiliconG	SG239A	
CA2524	**Exar**	**XR2524**	**3381**
	SiliconG	SG2524	
	Sprague	ULQ-8124	
	TI	SG2524	
CA258A	Motorola	LM258	
	National	LM258A	
	Signetics	LM258	
	TI	LM258	
	Thomson-CSF		
		TDE0158	
CA2904	Motorola	LM2904	
	National	LM2904	
	TI	LM2904	
CA3001	Hitachi	HA1110	
	SiliconG	SG3001	
CA301	AD	AD301	
	Fairchild	μA301A	
	Intersil	AD301	
	LinearTech	LM301	
		LM301A	
	Motorola	LM301	
	National	LM301	
		LM301A	
	NEC	μPC157	
		μPC301	
	Raytheon	LM301	
	RCA	LM301	
	SiliconG	SG301	
	TI	LM301	
		LM301A	
	Thomson-CSF		
		SFC2301	
	Toshiba	TA7506	
CA3011	Motorola	MC1590	
	National	LM3011	
	RCA	CA3012	
CA3012	Motorola	MC1590	
	National	LM3011	
	RCA	CA3011	
CA3018	National	LM3018	
	Thomson-CSF		
		SFC2018	
CA3019	National	LM3019	
CA3036	Thomson-CSF		
		SFC2036	
CA3038	Fairchild	μA709	
	Hitachi	HA1303	
	Motorola	MC1709	
		(Continued)	

Manufacturer Device	Replacement Source	Device	IC Master Page
CA3038	National	LM1709	
		LM709	
	NEC	μPC255	
		μPC55	
	Raytheon	RC709	
		RM709	
	TI	μA709	
	Thomson-CSF		
		SFC2709	
	Toshiba	TA7502	
CA3045	Fairchild	μA3045	
	Hitachi	HA1127	
	National	LM3045	
	Plessey	SL3045	
		SL3145	
	Sanyo	LA3045	
	SiliconG	SG3045	
		SG3821	
	Sprague	ULS-2045	
CA3046	Fairchild	μA3046	
	Motorola	MC3346	
	National	LM3046	
	Plessey	SL3046	
		SL3146	
	RCA	**CA3146**	**3601**
	Sanyo	LA3046	
	SiliconG	SG3046	
		SG3146	
		SG3821	
	Sprague	ULN-2046	
CA3054	Fairchild	μA3054	
	Motorola	CA3054	
	National	LM3054	
	SiliconG	SG3822	
	Sprague	ULN-2054	
	Thomson-CSF		
		SFC2054	
CA3056	**AD**	**AD741**	**3351**
	Fairchild	3871	
		μA741	
	Hitachi	HA17741	
	Intersil	AD741	
		ICL741	
	MicroPwr	MP5501	
		MP5502	**3529**
		OP-02	**3529**
	Mostek	MK3871	
	Motorola	LM741	
		MC1741	
	National	LM741	
	NEC	μPC151	
		μPC741	
	PMI	OP-01	
		OP-02	**3566**
		PM741	
		SSS741	
	Raytheon	RC741	
		RM741	
	RCA	CA741	
	Signetics	μA741	
	SiliconG	SG300	
		SG741	
	TI	μA741	
	Thomson-CSF		
		SFC2741	
	Toshiba	TA7504	
CA3058	SiliconG	SG3058	
CA3059	Motorola	CA3059	
	SiliconG	SG3059	
CA3064	Motorola	M5140	
		MC1358	
	National	LM3064	
	RCA	CA3065	
	Sanyo	LA1365	
	TI	SN76666	
CA3065	Motorola	M5140	
		MC1358	
	National	LM3064	
	RCA	CA3064	
	Sanyo	LA1365	
	TI	SN76666	
CA3066	National	LM3066	
	TI	SN76266	
CA3067	TI	SN76267	
CA307	AMD	LM307	
	AD	**AD741J**	**3351**
	Intersil	LM307	
	LinearTech	LM307	
	Motorola	LM307	
	National	LM307	
	Raytheon	LM307	
	SiliconG	SG307	
		(Continued)	

Manufacturer Device	Replacement Source	Device	IC Master Page
CA307	TI	LM307	
	Thomson-CSF		
		SFC2307	
CA3070	TI	SN76242	
CA3071	TI	SN76243	
CA3072	National	LM3072	
CA3075	National	LM3075	
	TI	SN76675	
CA3076	TI	SN76676	
CA3078	**Raytheon**	**RC3078**	**3592**
CA3079	Motorola	CA3079	
	SiliconG	SG3079	
CA3080	**Harris**	**HA-23080**	**3464**
CA3081	Plessey	SL3081	
	Signetics	CA3081	
	SiliconG	SG3081	
	Sprague	ULN-2081	
CA3082	Plessey	SL3082	
	SiliconG	SG3082	
	Sprague	ULN-2082	
CA3083	Plessey	SL3083	
		SL3183	
	RCA	**CA3183**	**3601**
	SiliconG	SG3083	
		SG3183	
	Sprague	ULN-2083	
CA3086	Fairchild	μA3086	
	Motorola	MC3386	
	National	LM3086	
	Plessey	SL3086	
	Sanyo	LA3086	
	SiliconG	SG3086	
		SG3886	
	Sprague	ULN-2086	
CA3089	Hitachi	HA1137	
		HA1230	
	National	CA3089	
		LM3089	
	Sanyo	LA1230	
		LA3089	
	SGS	TCA3089	
		TDA1200	
	Signetics	CA3089	
	Telefunken	U417	
	TI	SN76689	
CA311	AMD	LM311	
	AD	AD311	
	Fairchild	μA2903	
		μA311	
	Intersil	LM311	
	Motorola	LM2903	
		LM311	
	National	LM2903	
		LM311	
	NEC	μPC271	
		μPC311	
	Raytheon	LM311	
	RCA	LM311	
	Signetics	LM2903	
		LM311	
	SiliconG	SG311	
	TI	LM2903	
		LM311	
	Thomson-CSF		
		SFC2311	
		SFC3111	
CA3123	National	LM1820	
	TI	SN76635	
CA3126	National	LM1829	
		LM3126	
CA3127	Plessey	SL3127	
CA3146	Fairchild	μA3046	
	Motorola	MC3346	
	National	LM3046	
	Plessey	SL3046	
		SL3146	
	RCA	**CA3046**	**3601**
	Sanyo	LA3046	
	SiliconG	SG3046	
		SG3146	
		SG3821	
	Sprague	ULN-2046	
CA3162	AD	AD2020	
CA3172	National	LM1848	
CA3183	Plessey	SL3083	
		SL3183	
	RCA	CA3083	
	SiliconG	SG3083	
		SG3183	
	Sprague	ULN-2083	
CA3199	Plessey	SP8611	
CA3217	Hitachi	HA1148	

Manufacturer Device	Replacement Source	Device	IC Master Page
CA324	AMD	LM324	
	Exar	**XR3403**	**3378**
		XR3403C	
	Fairchild	μA324	
		μA3403	
	Motorola	LM324	
		MC3403	
	National	LM324	
	NEC	μPC324	
	Raytheon	LM324	
		RC3403	
		RC4137	
	RCA	LM324	
	Sanyo	LA6324	
	Signetics	LM324	
		MC3403	
	SiliconG	SG324	
	TI	LM324	
		MC3403	
	Thomson-CSF		
		TDB0124	
CA3300	Datel	ADC-883	
CA3302	Fairchild	μA2901	
		μA3302	
	Motorola	LM2901	
		MC3302	
	National	LM2901	
		LM3302	
	NEC	μPC2901	
	PMI	CMP-04	
	Raytheon	LM2901	
		RC3302	
	Signetics	LM2901	
		MC3302	
	SiliconG	SG3302	
	TI	LM2901	
		LM3302	
CA339	AMD	LM339	
		LM339A	
	Fairchild	μA339	
	Hitachi	HA17901	
	Motorola	LM339	
	National	LM339	
	NEC	μPC339	
	PMI	**CMP-04**	
		PM339A	
	Raytheon	LM339	
	RCA	**CA339A**	**3599**
		LM339	
	SiliconG	SG339	
	TI	LM339	
	Thomson-CSF		
		TDB0139	
CA339A	AMD	LM339	
		LM339A	
	Fairchild	μA339	
	Hitachi	HA17901	
	Motorola	LM339	
	National	LM339	
	NEC	μPC339	
	PMI	CMP-04	
		PM339A	
	Raytheon	LM339	
	RCA	**CA339**	**3599**
		LM339	
	SiliconG	SG339	
	TI	LM339	
	Thomson-CSF		
		TDB0139	
CA3401	Motorola	MC3401	
	National	LM3401	
		LM3900	
	Raytheon	LM3900	
		RC3401	
	TI	LM3900	
CA3524	**Exar**	**XR3524**	**3381**
	Signetics	**SG3524**	**3661**
	SiliconG	SG3524	
	Sprague	ULN-8124	
	TI	SG3524	
	Unitrode	UC3524	
CA355	Cherry	CS555	
	Exar	XR555	
	Fairchild	μA555	
	Hitachi	HA17555	
	Motorola	MC1455	
	National	LM555	
	NEC	μPC1555	
	Raytheon	RC555	
	RCA	**CA555**	**3604**
	Sanyo	LB8555	
	Signetics	NE555	
		(Continued)	

◆ Discontinued

The manufacturers report their devices can be used as direct replacements.
Performance details often differ, so compare the specifications considering your requirements.

RCA Solid State Division (Cont'd)

Manufacturer Device	Replacement Source	Device	IC Master Page
CA355	SiliconG	SG555	
	TI	NE555	
CA358A	Motorola	LM358	
	National	LM358A	
	NEC	μPC358	
	RCA	LM358	
	Sanyo	LA6358	
	Signetics	LM358	
		NE532	
	TI	LM358	
CA3724	Fairchild	FQ3724	
	Motorola	MQ3724	
	Raytheon	SP3724	
CA3725	Fairchild	FQ3725	
	Motorola	MQ3725	
	National	DH3725	
	Raytheon	SP3725	
CA555	Cherry	CS555	
	Exar	XR555	
	Fairchild	μA555	
	Hitachi	HA17555	
	Motorola	MC1455	
	National	LM555	
	NEC	μPC1555	
	Raytheon	RC555	
	RCA	CA355	
	Sanyo	LB8555	
	Signetics	NE555	
	SiliconG	SG555	
	TI	NE555	
CA723	Fairchild	μA723	
	Hitachi	HA17723	
	Intersil	LM723	
	Motorola	**MC1723**	**3532**
	National	LM723	
	Raytheon	RC723	
		RM723	
	RCA	LM723	
	SGS	L123	
	Signetics	μA723	
	SiliconG	SG723	
	TI	μA723	
	Thomson-CSF	SFC2723	
CA741	**AD**	**AD741**	**3351**
	Fairchild	3871	
		μA741	
	Hitachi	HA17741	
	Intersil	AD741	
		ICL741	
	MicroPwr	MP5501	
		MP5502	**3529**
		OP-02	**3529**
	Mostek	MK3871	
	Motorola	LM741	
		MC1741	
	National	LM741	
	NEC	μPC151	
		μPC741	
	PMI	OP-01	
		OP-02	**3566**
		PM741	
		SSS741	
	Raytheon	RC741	
		RM741	
	RCA	CA3056	
	Signetics	μA741	
	SiliconG	SG300	
		SG741	
	TI	μA741	
	Thomson-CSF	SFC2741	
	Toshiba	TA7504	
CA747	AMD	747	
	Fairchild	μA747	
	Hitachi	HA17747	
	MicroPwr	MPOP04	
	Motorola	MC1747	
	National	LM747	
	NEC	μPC251	
	~~PMI~~	~~OP-04~~	3566
		PM747	
	Raytheon	RC747	
		RM747	
	Signetics	μA747	
	SiliconG	SG747	
	TeledyneS	747	
	TI	μA747	
CA748	AMD	LM201	
	AD	AD201	
	Fairchild	μA201	
		μA748	
	Intersil	LM748	
		μA748	
	Motorola	LM201	
		MC1748	
	National	LM201	
		LM748	
	Plessey	SL748	
	RCA	CA201	
		LM748	
	SiliconG	SG201	
		SG748	
	TI	LM201	
		SN72748P	
		μA748	
	Thomson-CSF	SFC2201	
		SFC2748	
CA758	Motorola	μA758	
	National	LM1800	
	Signetics	μA758	
	TI	SN76111	
		SN76116	
CA7607	Toshiba	TA7607	
CA7611	Toshiba	TA7611	
CA810	Fairchild	TBA810	
	SGS	TBA810	
CD0438	**AMI**	**S4521**	**2810**
	Hughes	HLCD0438	
	National	MM58438	
CD22100	Motorola	MC1452100	
	SGS	M22100	
CD22104	Hughes	HLCD7211	
	Intersil	ICL7211	
	RCA	**CD22105**	**839**
	TeledyneS	TSC7211	
CD22105	Hughes	HLCD7211	
	Intersil	ICL7211	
	RCA	**CD22104**	**839**
	TeledyneS	TSC7211	
CD22404	Motorola	MC14404	
CD22413	Motorola	MC14413	
CD22414	Motorola	MC14414	
CD22416	**Motorola**	**MC14416**	**3536**
CD22419	**Motorola**	**MC14419**	**3536**
CD4000	Motorola	MC14000	
	National	CD4000	
	SGS	HCF4000	
	Signetics	HEF400	
	SSS	SCL4000	
	Solitron	CM4000	
CD4001	Fairchild	F4001	
	Hitachi	HD14001	
	Motorola	MC14001	
	National	CD4001	
		MM74C02	
	OKI	MSM4001	
	Sanyo	LC4001B	
	SGS	HCF4001	
	Signetics	HEF4001	
	SSS	SCL4001	
	Solitron	CM4001	
	Toshiba	TC4001	
CD4002	Fairchild	F4002	
	Hitachi	HD14002	
	Motorola	MC14002	
	National	CD4002	
	SGS	HCF4002	
	Signetics	HEF4002	
	SSS	SCL4002	
	Solitron	CM4002	
	Toshiba	TC4002	
CD4007	Fairchild	F4007	
	Hitachi	HD14007	
	Motorola	MC14007	
	National	CD4007	
	SGS	HCF4007	
	Signetics	HEF4007	
	SSS	SCL4007	
	Solitron	CM4007	
	Toshiba	TC4007	
CD4008	Fairchild	F4008	
	Hitachi	HD14008	
	Motorola	MC14008	
	National	CD4008	
		MM74C83	
	SGS	HCF4008	
	Signetics	HEF4008	
	SSS	SCL4008	
		(Continued)	
CD4008	Solitron	CM4008	
	Toshiba	TC4008	
CD4010	Hitachi	HD14010	
	National	CD4010	
	SGS	HCF4010	
	SSS	SCL4010	
	Solitron	CM4010	
	Toshiba	TC4010	
CD40100	SGS	HCF40100	
CD40101	Fairchild	F4531	
	Hitachi	HD14531	
	Motorola	MC14531	
	SGS	HCF40101	
	Signetics	HEF4531	
	SSS	SCL4531	
	Toshiba	TC4531	
CD40102	SGS	HCF40102	
CD40103	SGS	HCF40103	
CD40105	SGS	HCF40105	
CD40106	Fairchild	F40014	
	Hitachi	HD14584	
	Motorola	MC14584	
	National	CD40106	
		CD4584	
		MM54C14	
		MM74C14	
	SGS	HCF40106	
	Signetics	**HEF40106**	**865**
	SSS	SCL4584	
CD40107	SGS	HCF40107	
	Toshiba	TC40107	
CD40108	Hitachi	HD14580	
	Motorola	MC14580	
CD40109	Fairchild	F4104	
	Mitel	MD4104	
	Motorola	MC14504	
	National	MM4104	
	SGS	HCF40109	
	Signetics	HEF4104	
CD4011	Fairchild	F4011	
	Hitachi	HD14011	
	Motorola	MC14011	
	National	CD4011	
		MM74C00	
	OKI	MSM4011	
	Sanyo	LC4011	
	SGS	HCF4011	
	Signetics	HEF4011	
	SSS	SCL4011	
	Solitron	CM4011	
	Toshiba	TC4011	
CD4012	Fairchild	F4012	
	Hitachi	HD14012	
	Motorola	MC14012	
	National	CD4012	
	SGS	HCF4012	
	Signetics	HEF4012	
	SSS	SCL4012	
	Solitron	CM4012	
	Toshiba	TC4012	
CD4013	Fairchild	F4013	
	Hitachi	HD14013	
	Motorola	MC14013	
	National	CD4013	
		MM74C74	
	OKI	MSM4013	
	Sanyo	LC4013	
	SGS	HCF4013	
	Signetics	HEF4013	
	SSS	SCL4013	
	Solitron	CM4013	
	Toshiba	TC4013	
CD4014	Fairchild	F4014	
	Hitachi	HD14014	
	Motorola	MC14014	
	National	CD4014	
	SGS	HCF4014	
	Signetics	HEF4014	
	SSS	SCL4014	
	Solitron	CM4014	
	Toshiba	TC4014	
CD4015	Fairchild	F4015	
	Hitachi	HD14015	
	Motorola	MC14015	
	National	CD4015	
		MM74C164	
	OKI	MSM4015	
	Sanyo	LC4015	
	SGS	HCF4015	
	Signetics	HEF4015	
	SSS	SCL4015	
		(Continued)	
CD4015	Solitron	CM4015	
	Toshiba	TC4015	
CD4016	Fairchild	F4016	
		F4066	
	Hitachi	HD14016	
		HD14066	
	Motorola	MC14016	
		MC14066	
	National	CD4016	
		CD4066	
	RCA	CD4066	
	Sanyo	LC4016	
		LC4066	
	SGS	HCF4016	
		HCF4066	
	Signetics	**HEF4016**	**864**
		HEF4066	
	SSS	SCL4016	
		SCL4066	
	Solitron	CM4016	
		CM4066	
		HCF4016	
	Toshiba	TC4016	
		TC4066	
CD40160	Fairchild	F40160	
	Hitachi	HD14160	
	Motorola	MC14160	
	National	CD40160	
		MM54C160	
		MM74C160	
	SGS	HCF40160	
	SSS	SCL4160	
	Toshiba	TC40160	
CD40161	Fairchild	F40161	
	Hitachi	HD14161	
	Motorola	MC14161	
	National	CD40161	
		MM54C161	
		MM74C161	
	SGS	HCF40161	
	Signetics	HEF40161	
	SSS	SCL4161	
	Toshiba	TC40161	
CD40162	Fairchild	F40162	
	Hitachi	HD14162	
	Motorola	MC14162	
	National	CD40162	
		MM54C162	
		MM74C162	
	SGS	HCF40162	
	Signetics	HEF40162	
	SSS	SCL4162	
	Toshiba	TC40162	
CD40163	Fairchild	F40163	
	Hitachi	HD14163	
	Motorola	MC14163	
	National	CD40163	
		MM54C163	
		MM74C163	
	SGS	HCF40163	
	Signetics	HEF40163	
	SSS	SCL4163	
	Toshiba	TC40163	
CD4017	Fairchild	F4017	
	Hitachi	HD14017	
	Motorola	MC14017	
	National	CD4017	
	SGS	HCF4017	
	Signetics	HEF4017	
	SSS	SCL4017	
	Solitron	CM4017	
	Toshiba	TC4017	
CD40174	Fairchild	F40174	
	Hitachi	HD14174	
	Motorola	MC14174	
	National	CD40174	
		MM54C174	
		MM74C174	
	SGS	HCF40174	
	Signetics	HEF40174	
	SSS	SCL4174	
	Toshiba	TC40174	
CD40175	Motorola	MC40175	
CD4018	Fairchild	F4018	
	Hitachi	HD14018	
	Motorola	MC14018	
	National	CD4018	
	SGS	HCF4018	
	Signetics	HEF4018	
	SSS	SCL4018	
	Solitron	CM4018	
	Toshiba	TC4018	

◆ Discontinued

Bold face device numbers indicate manufacturers data is provided in the IC Master on the pages noted.

© IC MASTER 1984

RCA Solid State Division (Cont'd)

Manufacturer Device	Replacement Source	Device	IC Master Page
CD40181	Hitachi	HD14581	
	Motorola	MC14581	
	RCA	CD4057	
	SGS	HCF40181	
	SSS	SCL4581	
CD40182	Fairchild	F4582	
	Hitachi	HD14582	
	Motorola	MC14582	
	SGS	HCF40182	
	SSS	SCL4582	
CD4019	Fairchild	F4019	
	National	CD4019	
	OKI	MSM4019	
	Sanyo	LC4019	
	SGS	HCF4019	
	Signetics	HEF4019	
	SSS	SCL4019	
	Solitron	CM4019	
	Toshiba	TC4019	
CD40192	Fairchild	F4029	
	Motorola	MC14029	
	National	CD40192	
		CD4029	
	RCA	CD4029	
	SGS	HCF40192	
		HCF4029	
	Signetics	HEF40192	
	SSS	SCL4029	
		SCL4192	
	Solitron	CM4029	
	Toshiba	TC40192	
		TC4029	
CD40193	Fairchild	F40193	
	National	CD40193	
		MM54C193	
		MM74C193	
	SGS	HCF40193	
	Signetics	HEF40193	
	SSS	SCL4193	
	Toshiba	TC40193	
~~CD40194~~	~~Fairchild~~	~~F40194~~	
	Hitachi	HD14194	
	Motorola	MC14194	
	SGS	HCF40194	
	Signetics	HEF40194	
CD4020	Fairchild	F4020	
	Hitachi	HD14020	
	Motorola	MC14020	
	National	CD4020	
	SGS	HCF4020	
	Signetics	HEF4020	
	SSS	SCL4020	
	Solitron	CM4020	
	Toshiba	TC4020	
CD40208	SGS	HCF40208	
CD4021	Fairchild	F4021	
	Hitachi	HD14021	
	Motorola	MC14021	
	National	CD4021	
	SGS	HCF4021	
	Signetics	HEF4021	
	SSS	SCL4021	
	Toshiba	TC4021	
CD4022	Fairchild	F4022	
	Hitachi	HD14022	
	Motorola	MC14022	
	National	CD4022	
	SGS	HCF4022	
	Signetics	HEF4022	
	SSS	SCL4022	
	Solitron	CM4022	
	Toshiba	TC4022	
CD4023	Fairchild	F4023	
	Hitachi	HD14023	
	Motorola	MC14023	
	National	CD4023	
		MM74C10	
	SGS	HCF4023	
	Signetics	HEF4023	
	SSS	SCL4023	
	Solitron	CM4023	
	Toshiba	TC4023	
CD4024	Fairchild	F4024	
	Hitachi	HD14024	
	Motorola	MC14024	
	National	CD4024	
	SGS	HCF4024	
	Signetics	HEF4024	
	SSS	SCL4024	

(Continued)

Manufacturer Device	Replacement Source	Device	IC Master Page
CD4024	Solitron	CM4024	
	Toshiba	TC4024	
CD4025	Fairchild	F4025	
	Hitachi	HD14025	
	Motorola	MC14025	
	National	CD4025	
	SGS	HCF4025	
	Signetics	HEF4025	
	SSS	SCL4025	
	Solitron	CM4025	
	Toshiba	TC4025	
CD40257	SGS	HCF40257	
CD4026	SGS	HCF4026	
	SSS	SCL4026	
	Solitron	CM4026	
CD4027	Fairchild	F4027	
	Hitachi	HD14027	
	Motorola	MC14027	
	National	CD4027	
		MM74C76	
	OKI	MSM4027	
	Sanyo	LC4027	
	SGS	HCF4027	
	Signetics	HEF4027	
	SSS	SCL4027	
	Solitron	CM4027	
CD4029	Fairchild	F4029	
	Motorola	MC14029	
	National	CD40192	
		CD4029	
	RCA	CD40192	
	SGS	HCF40192	
		HCF4029	
	Signetics	HEF40192	
	SSS	SCL4029	
		SCL4192	
	Solitron	CM4029	
	Toshiba	TC40192	
		TC4029	
CD4030	Fairchild	F4030	
	National	CD4030	
	SGS	HCF4030	
	Signetics	HEF4030	
	~~SSS~~	~~SCL4030~~	
	Solitron	CM4030	
	Toshiba	TC4030	
CD4031	Fairchild	F4031	
	National	CD4031	
	SGS	HCF4031	
	Signetics	HEF4731	
CD4032	Hitachi	HD14032	
	Motorola	MC14032	
	SGS	HCF4032	
	Solitron	CM4032	
	Toshiba	TC4032	
CD4033	SGS	HCF4033	
	SSS	SCL4033	
	Solitron	CM4033	
CD4034	Fairchild	F4034	
	Hitachi	HD14034	
	Motorola	MC14034	
	National	CD4034	
	SGS	HCF4034	
	SSS	SCL4034	
	Solitron	CM4034	
	Toshiba	TC4034	
CD4035	Fairchild	F4035	
	Hitachi	HD14035	
	Motorola	MC14035	
	SGS	HCF4035	
	Signetics	HEF4035	
	Solitron	CM4035	
	Toshiba	TC4035	
CD4036	Solitron	CM4036	
	Toshiba	TC4036	
CD4037	Solitron	CM4037	
CD4038	Hitachi	HD14038	
	Motorola	MC14038	
	SGS	HCF4038	
	Solitron	CM4038	
	Toshiba	TC4038	
CD4039	Solitron	CM4039	
	Toshiba	TC4039	
CD4040	Fairchild	F4040	
	Hitachi	HD14040	
	Motorola	MC14040	
	National	CD4040	
	SGS	HCF4040	
	Signetics	HEF4040	
	SSS	SCL4040	
	Solitron	CM4040	
	Toshiba	TC4040	

Manufacturer Device	Replacement Source	Device	IC Master Page
CD4041	Fairchild	F4041	
	National	CD4041	
	SGS	HCF4041	
	Signetics	HEF4041	
	SSS	SCL4041	
	Solitron	CM4041	
CD4042	Fairchild	F4042	
	Hitachi	HD14042	
	Motorola	MC14042	
	National	CD4042	
	SGS	HCF4042	
	Signetics	HEF4042	
	SSS	SCL4042	
	Solitron	CM4042	
	Toshiba	TC4042	
CD4043	Hitachi	HD14043	
	Motorola	MC14043	
	National	CD4043	
	SGS	HCF4043	
	Signetics	HEF4043	
	SSS	SCL4043	
	Solitron	CM4043	
	Toshiba	TC4043	
CD4044	Fairchild	F4044	
	Hitachi	HD14044	
	Motorola	MC14044	
	National	CD4044	
	SGS	HCF4044	
	Signetics	HEF4044	
	Solitron	CM4044	
	Toshiba	TC4044	
CD4045	Fairchild	F4521	
	Motorola	MC14521	
	SGS	HCF4045	
	Signetics	HEF4521	
	SSS	SCL4445	
	Solitron	CM4045	
	Toshiba	TC4521	
CD4046	Fairchild	F4046	
	Hitachi	HD14046	
	Motorola	MC14046	
	National	CD4046	
	SGS	HCF4046	
	~~SSS~~	~~SCL4046~~	
	Solitron	CM4046	
CD4047	Fairchild	F4047	
	National	CD4047	
	SGS	HCF4047	
	Signetics	HEF4047	
	SSS	SCL4047	
	Solitron	CM4047	
	Toshiba	TC4047	
CD4048	National	CD4048	
	SGS	HCF4048	
	SSS	SCL4402	
	Solitron	CM4048	
CD4049	Fairchild	F4049	
	Hitachi	HD14049	
	Motorola	MC14049	
	National	CD4049	
	OKI	MSM4049	
	Sanyo	LC4049	
	SGS	HCF4049	
	Signetics	HEF4049	
	SSS	SCL4049	
	Solitron	CM4049	
	Toshiba	TC4049	
CD4050	Fairchild	F4050	
	Hitachi	HD14050	
	Motorola	MC14050	
	National	CD4050	
	SGS	HCF4050	
	Signetics	HEF4050	
	SSS	SCL4050	
	Solitron	CM4050	
	Toshiba	TC4050	
CD4051	Fairchild	F4051	
	Hitachi	HD14051	
	Motorola	MC14051	
	National	CD4051	
	SGS	HCF4051	
	Signetics	HEF4051	
	SSS	SCL4051	
	Solitron	CM4051	
	Toshiba	TC4051	
CD4052	Fairchild	F4052	
	Motorola	MC14052	
	Signetics	HEF4052	
CD4053	Fairchild	F4053	
	Hitachi	HD14053	
	Motorola	MC14053	
	National	CD4053	

(Continued)

Manufacturer Device	Replacement Source	Device	IC Master Page
CD4053	SGS	HCF4053	
	Signetics	HEF4053	
	SSS	SCL4053	
	Solitron	CM4053	
	Toshiba	TC4053B	
CD4054	SGS	HCF4054	
	Toshiba	TC4054	
CD4055	Mitel	MD4055	
	SGS	HCF4055	
	Toshiba	TC4055	
CD4056	Mitel	MD4056	
	SGS	HCF4056	
	Toshiba	TC4056	
CD4057	Hitachi	HD14581	
	Motorola	MC14581	
	RCA	CD40181	
	SGS	HCF40181	
	SSS	SCL4581	
CD4059	Hitachi	HD14569	
	Motorola	MC14569	
	Signetics	HEF4059	
CD4060	Motorola	MC14060	
	National	CD4060	
	SGS	HCF4060	
	Signetics	HEF4060	
	SSS	SCL4060	
CD4063	SGS	HCF4063	
	Toshiba	TC4063	
CD4066	Fairchild	F4016	
		F4066	
	Hitachi	HD14016	
		HD14066	
	Motorola	MC14016	
		MC14066	
	National	CD4016	
		CD4066	
	RCA	CD4016	
	Sanyo	LC4016	
		LC4066	
	SGS	HCF4016	
		HCF4066	
	Signetics	**HEF4016**	**864**
		HEF4066	
	~~SSS~~	~~SCL4016~~	
		SCL4066	
	Solitron	CM4016	
		CM4066	
		HCF4016	
	Toshiba	TC4016	
		TC4066	
CD4067	Fairchild	F4067	
	Motorola	MC14067	
	SGS	HCF4067	
	Signetics	HEF4067	
CD4068	Fairchild	F4068	
	Hitachi	HD14068	
	Motorola	MC14068	
	SGS	HCF4068	
	Signetics	HEF4068	
	SSS	SCL4068	
	Solitron	CM4068	
	Toshiba	TC4068	
CD4069	Fairchild	F4069	
	Hitachi	HD14069	
	Motorola	MC14069	
	National	CD4069	
		MM54C04	
		MM74C04	
	OKI	MSM4069	
	Sanyo	LC4069	
	SGS	HCF4069	
	Signetics	HEF4069	
	SSS	SCL4069	
		SCL4449	
	Solitron	CM4069	
	Toshiba	TC4069	
CD4070	Fairchild	F4070	
	Hitachi	HD14070	
	Motorola	MC14070	
	National	CD4070	
		MM74C86	
	SGS	HCF4070	
	Signetics	HEF4070	
	SSS	SCL4070	
	Solitron	CM4070	
CD4071	Fairchild	F4071	
	Hitachi	HD14071	
	Motorola	MC14071	
	National	CD4071	
		MM74C32	
	OKI	MSM4071	
	Sanyo	LC4071	

(Continued)

◆ Discontinued

The manufacturers report their devices can be used as direct replacements.
Performance details often differ, so compare the specifications considering your requirements.

RCA Solid State Division (Cont'd)

Manufacturer Device	Replacement Source	Device	IC Master Page
CD4071	SGS	HCF4071	
	Signetics	HEF4071	
	SSS	SCL4071	
	Solitron	CM4071	
	Toshiba	TC4071	
CD4072	Fairchild	F4072	
	Hitachi	HD14072	
	Motorola	MC14072	
	National	CD4072	
	SGS	HCF4072	
	Signetics	HEF4072	
	SSS	SCL4072	
	Toshiba	TC4072	
CD4073	Fairchild	F4073	
	Hitachi	HD14073	
	Motorola	MC14073	
	National	CD4073	
	SGS	HCF4073	
	Signetics	HEF4073	
	SSS	SCL4073	
	Solitron	CM4073	
	Toshiba	TC4073	
CD4075	Fairchild	F4075	
	Hitachi	HD14075	
	Motorola	MC14075	
	National	CD4075	
	SGS	HCF4075	
	Signetics	HEF4075	
	SSS	SCL4075	
	Solitron	CM4075	
	Toshiba	TC4075	
CD4076	Fairchild	F4076	
	Hitachi	HD14076	
	Motorola	MC14076	
	National	CD4076	
		MM54C173	
		MM74C173	
	SGS	HCF4076	
	Signetics	HEF4076	
	SSS	SCL4076	
	Solitron	CM4076	
	Toshiba	TC4076	
CD4077	Fairchild	F4077	
	Hitachi	HD14077	
	Motorola	MC14077	
	National	CD4077	
	SGS	HCF4077	
	Signetics	HEF4077	
	SSS	SCL4077	
	Solitron	CM4077	
CD4078	Fairchild	F4078	
	Hitachi	HD14078	
	Motorola	MC14078	
	SGS	HCF4078	
	Signetics	HEF4078	
	SSS	SCL4078	
	Solitron	CM4078	
	Toshiba	TC4078	
CD4081	Fairchild	F4081	
	Hitachi	HD14081	
	Motorola	MC14081	
	National	CD4081	
		MM74C08	
	OKI	MSM4081	
	Sanyo	LC4081	
	SGS	HCF4081	
	Signetics	HEF4081	
	SSS	SCL4081	
	Solitron	CM4081	
	Toshiba	TC4081	
CD4082	Fairchild	F4082	
	Hitachi	HD14082	
	Motorola	MC14082	
	National	CD4082	
	SGS	HCF4082	
	Signetics	HEF4082	
	SSS	SCL4082	
	Toshiba	TC4082	
CD4085	Fairchild	F4085	
	National	CD4085	
	SGS	HCF4085	
	Signetics	HEF4085	
	SSS	SCL4085	
	Toshiba	TC4085	
CD4086	Fairchild	F4086	
	SGS	HCF4086	
	Signetics	HEF4086	
	SSS	SCL4086	
	Toshiba	TC4086	
CD4089	National	CD4089	
	SGS	HCF4089	
CD4093	Fairchild	F4093	
	Hitachi	HD14093	
	Motorola	MC14093	
	National	CD4093	
	OKI	MSM4093	
	Sanyo	LC4093	
	SGS	HCF4093	
	Signetics	HEF4093	
	SSS	SCL4093	
	Toshiba	TC4093	
CD4094	Hitachi	HD14094	
	Motorola	MC14094	
	SGS	HCF4094	
	SSS	SCL4094	
	Toshiba	TC4094	
CD4095	SGS	HCF4095	
CD4096	SGS	HCF4096	
CD4097	Fairchild	F4097	
	Motorola	MC14097	
	SGS	HCF4097	
CD4098	Fairchild	F4528	
	Hitachi	HD14528	
	Motorola	MC14528	
	National	CD4528	
		MM74C221	
	SGS	HCF4098	
	Signetics	HEF4528	
	SSS	SCL4528	
	Toshiba	TC4528	
CD4099	Hitachi	HD14099	
	Motorola	MC14099	
	National	CD4099	
	SGS	HCF4099	
	SSS	SCL4099	
	Toshiba	TC4099	
CD4502	Hitachi	HD14502	
	Motorola	MC14502	
	SGS	HCF4502	
	Signetics	HEF4502	
	SSS	SCL4502	
CD4503	Fairchild	F40097	
	Hitachi	HD14503	
	Motorola	MC14503	
	National	CD4503	
		MM80C97	
	Signetics	HEF40097	
CD4508	Hitachi	HD14508	
		HD74147	
	Motorola	MC14508	
	National	DM74147	
	SGS	HCF4508	
	Signetics	**74147**	**861**
		HEF4508	
		N82147	
	SSS	SCL4508	
	Solitron	CM4508	
	TI	**SN74147**	**970**
	Toshiba	TC4508	
CD4510	Fairchild	F4510	
	Hitachi	HD14510	
	Motorola	MC14510	
	National	CD4510	
	SGS	HCF4510	
	Signetics	HEF4510	
	SSS	SCL4510	
	Solitron	CM4510	
	Toshiba	TC4510	
CD4511	Fairchild	F4511	
	Hitachi	HD14511	
	Mitel	MD4511	
	MMI	4511	
	Motorola	MC14511	
	National	CD4511	
	NEC	μPD4511	
	SGS	HCF4511	
	Signetics	HEF4511	
	SSS	SCL4511	
	Solitron	CM4511	
	Toshiba	TC4511	
CD4512	Fairchild	F4512	
	Hitachi	HD14512	
	Motorola	MC14512	
	National	CD4512	
	SGS	HCF4512	
	SSS	SCL4512	
	Toshiba	TC4512	
CD4514	Fairchild	F4514	
	Hitachi	HD14514	
	Motorola	MC14514	
	National	CD4514	

(Continued)

Manufacturer Device	Replacement Source	Device	IC Master Page
CD4514	SGS	HCF4514	
	Signetics	HEF4514	
	SSS	SCL4514	
	Solitron	CM4514	
	Toshiba	TC4514	
CD4515	Fairchild	F4515	
	Hitachi	HD14515	
	Motorola	MC14515	
	National	CD4515	
	SGS	HCF4515	
	Signetics	HEF4515	
	SSS	SCL4515	
	Solitron	CM4515	
	Toshiba	TC4515	
CD4516	Fairchild	F4516	
	Hitachi	HD14516	
	Motorola	MC14516	
	National	CD4516	
	SGS	HCF4516	
	Signetics	HEF4516	
	SSS	SCL4516	
	Solitron	CM4516	
	Toshiba	TC4516	
CD4517	Hitachi	HD14517	
	Motorola	MC14517	
	Signetics	HEF4517	
	SSS	SCL4517	
CD4518	Fairchild	F4518	
	Hitachi	HD14518	
	Motorola	MC14518	
	National	CD4518	
	SGS	HCF4518	
	Signetics	HEF4518	
	SSS	SCL4518	
	Solitron	CM4518	
	Toshiba	TC4518	
CD4519	Hitachi	HD14519	
		HD4519	
	Motorola	MC14519	
	National	CD4519	
	Signetics	HEF4519	
CD4520	Fairchild	F4520	
	Hitachi	HD14520	
	Motorola	MC14520	
	National	CD4520	
	OKI	MSM4520	
	Sanyo	LC4520	
	SGS	HCF4520	
	Signetics	HEF4520	
	SSS	SCL4520	
	Solitron	CM4520	
	Toshiba	TC4520	
CD4522	Fairchild	F4522	
	Hitachi	HD14522	
	Motorola	MC14522	
	National	CD4522	
	Signetics	HEF4522	
	SSS	SCL4522	
	Toshiba	TC4522	
CD4527	Fairchild	F4527	
	Hitachi	HD14527	
	Motorola	MC14527	
	National	CD4527	
	SGS	HCF4527	
	Signetics	HEF4527	
	SSS	SCL4527	
	Toshiba	TC4527	
		TR4527	
CD4532	Fairchild	F4532	
	Hitachi	HD14532	
	Motorola	MC14532	
	SGS	HCF4532	
	Signetics	HEF4532	
	SSS	SCL4532	
	Toshiba	TC4532	
CD4536	Motorola	MC14536	
CD4541B	Motorola	MC14541B	
	Signetics	HEF4591	
CD4543	Fairchild	F4543	
	Hitachi	HD14543	
	Motorola	MC14543	
	National	CD4543	
	Signetics	HEF4543	
	Toshiba	TC4543	
CD4543B	Motorola	MC14543B	
CD4555	Fairchild	F4555	
	Hitachi	HD14555	
	Motorola	MC14555	
	SGS	HCF4555	
	Signetics	HEF4555	
	SSS	SCL4555	
	Toshiba	TC4555	
CD4556	Fairchild	F4556	
	Motorola	MC14556	
	SGS	HCF4556	
	Signetics	HEF4556	
	SSS	SCL4556	
	Toshiba	TC4556	
CD4585	Fairchild	F40085	
	Hitachi	HD14585	
	Motorola	MC14585	
	National	MM74C85	
	Signetics	HEF4585	
	SSS	SCL4585	
	Toshiba	TC4585	
CD4724	Fairchild	F4724	
CD4XXX	Fairchild	34XXX	
		F4XXX	
	Hitachi	HD14XXX	
	Motorola	MC14XXX	
	National	CD4XXX	
	OKI	MSM4XXX	
	SGS	HCF4XXX	
	SSS	SCL4XXX	
	Solitron	CM4XXX	
	TI	TP4000 series	
	Toshiba	TC4XXX	
CD54HC00	Motorola	MC54HC00	
	National	MM54HC00	
	Signetics	PCF54HC00	
CD54HC02	Motorola	MC54HC02	
	National	MM54HC02	
	Signetics	PCF54HC02	
CD54HC04	Motorola	MC54HC04	
	National	MM54HC04	
	Signetics	PCF54HC04	
CD54HC08	Motorola	MC54HC08	
	National	MM54HC08	
	Signetics	PCF54HC08	
CD54HC10	Motorola	MC54HC10	
	National	MM54HC10	
	Signetics	PCF54HC10	
CD54HC107	Motorola	MC54HC107	
	National	MM54HC107	
	Signetics	PCF54HC107	
CD54HC109	Motorola	MC54HC109	
	National	MM54HC109	
	Signetics	PCF54HC109	
CD54HC11	Motorola	MC54HC11	
	National	MM54HC11	
	Signetics	PCF54HC11	
CD54HC112	Motorola	MC54HC112	
	National	MM54HC112	
	Signetics	PCF54HC112	
CD54HC123	Motorola	MC54HC123	
	National	MM54HC123	
	Signetics	PCF54HC123	
CD54HC132	Motorola	MC54HC132	
	National	MM54HC132	
	Signetics	PCF54HC132	
CD54HC133	Motorola	MC54HC133	
	National	MM54HC133	
	Signetics	PCF54HC133	
CD54HC138	Motorola	MC54HC138	
	National	MM54HC138	
	Signetics	PCF54HC138	
CD54HC139	Motorola	MC54HC139	
	National	MM54HC139	
	Signetics	PCF54HC139	
CD54HC14	Motorola	MC54HC14	
	National	MM54HC14	
	Signetics	PCF54HC14	
CD54HC147	Motorola	MC54HC147	
	National	MM54HC147	
	Signetics	PCF54HC147	
CD54HC151	Motorola	MC54HC151	
	National	MM54HC151	
	Signetics	PCF54HC151	
CD54HC153	Motorola	MC54HC153	
	National	MM54HC153	
	Signetics	PCF54HC153	
CD54HC154	Motorola	MC54HC154	
	National	MM54HC154	
	Signetics	PCF54HC154	
CD54HC157	Motorola	MC54HC157	
	Signetics	PCF54HC157	
CD54HC158	Motorola	MC54HC158	
	National	MM54HC158	
	Signetics	PCF54HC158	
CD54HC160	Motorola	MC54HC160	
	National	MM54HC160	
	Signetics	PCF54HC160	

◆ Discontinued

Bold face device numbers indicate manufacturers data is provided in the IC Master on the pages noted.

© IC MASTER 1984

RCA Solid State Division (Cont'd)

Manufacturer Device	Replacement Source	Device	IC Master Page
CD54HC161	Motorola	MC54HC161	
	National	MM54HC161	
	Signetics	PCF54HC161	
CD54HC162	Motorola	MC54HC162	
	National	MM54HC162	
	Signetics	PCF54HC162	
CD54HC163	Motorola	MC54HC163	
	National	MM54HC163	
	Signetics	PCF54HC163	
CD54HC164	Motorola	MC54HC164	
	National	MM54HC164	
	Signetics	PCF54HC164	
CD54HC165	Motorola	MC54HC165	
	National	MM54HC165	
	Signetics	PCF54HC165	
CD54HC166	Signetics	PCF54HC166	
CD54HC173	Motorola	MC54HC173	
	National	MM54HC173	
	Signetics	PCF54HC173	
CD54HC174	Motorola	MC54HC174	
	National	MM54HC174	
	Signetics	PCF54HC174	
CD54HC175	Motorola	MC54HC175	
	National	MM54HC175	
	Signetics	PCF54HC175	
CD54HC191	Signetics	PCF54HC191	
CD54HC192	Motorola	MC54HC192	
	National	MM54HC192	
	Signetics	PCF54HC192	
CD54HC193	Motorola	MC54HC193	
	National	MM54HC193	
	Signetics	PCF54HC193	
CD54HC194	Motorola	MC54HC194	
	National	MM54HC194	
	Signetics	PCF54HC194	
CD54HC195	Motorola	MC54HC195	
	National	MM54HC195	
	Signetics	PCF54HC195	
CD54HC20	Motorola	MC54HC20	
	National	MM54HC20	
	Signetics	PCF54HC20	
CD54HC221	Motorola	MC54HC221	
	National	MM54HC221	
	Signetics	PCF54HC221	
CD54HC238	Signetics	PCF54HC238	
CD54HC240	Motorola	MC54HC240	
	National	MM54HC240	
	Signetics	PCF54HC240	
CD54HC241	Motorola	MC54HC241	
	National	MM54HC241	
	Signetics	PCF54HC241	
CD54HC242	Motorola	MC54HC242	
	National	MM54HC242	
	Signetics	PCF54HC242	
CD54HC243	Motorola	MC54HC243	
	National	MM54HC243	
	Signetics	PCF54HC243	
CD54HC244	Motorola	MC54HC244	
	National	MM54HC244	
	Signetics	PCF54HC244	
CD54HC245	Motorola	MC54HC245	
	National	MM54HC245	
	Signetics	PCF54HC245	
CD54HC251	Motorola	MC54HC251	
	National	MM54HC251	
	Signetics	PCF54HC251	
CD54HC253	Motorola	MC54HC253	
	National	MM54HC253	
	Signetics	PCF54HC253	
CD54HC257	Motorola	MC54HC257	
	National	MM54HC257	
	Signetics	PCF54HC257	
CD54HC259	Motorola	MC54HC259	
	National	MM54HC259	
	Signetics	PCF54HC259	
CD54HC266	Motorola	MC54HC266	
	National	MM54HC266	
	Signetics	PCF54HC266	
CD54HC27	Motorola	MC54HC27	
	National	MM54HC27	
	Signetics	PCF54HC27	
CD54HC273	Motorola	MC54HC273	
	Signetics	PCF54HC273	
CD54HC280	Motorola	MC54HC280	
	National	MM54HC280	
	Signetics	PCF54HC280	
CD54HC297	Signetics	PCF54HC297	
CD54HC299	Motorola	MC54HC299	
	National	MM54HC299	
	Signetics	PCF54HC299	
CD54HC30	Motorola	MC54HC30	
	National	MM54HC30	
	Signetics	PCF54HC30	
CD54HC32	Motorola	MC54HC32	
	National	MM54HC32	
	Signetics	PCF54HC32	
CD54HC354	Motorola	MC54HC354	
	National	MM54HC354	
	Signetics	PCF54HC354	
CD54HC356	Motorola	MC54HC356	
	National	MM54HC356	
	Signetics	PCF54HC356	
CD54HC365	Motorola	MC54HC365	
	National	MM54HC365	
	Signetics	PCF54HC365	
CD54HC366	Motorola	MC54HC366	
	National	MM54HC366	
	Signetics	PCF54HC366	
CD54HC367	Motorola	MC54HC367	
	National	MM54HC367	
	Signetics	PCF54HC367	
CD54HC368	Motorola	MC54HC368	
	National	MM54HC368	
	Signetics	PCF54HC368	
CD54HC373	Motorola	MC54HC373	
	National	MM54HC373	
	Signetics	PCF54HC373	
CD54HC374	Motorola	MC54HC374	
	National	MM54HC374	
	Signetics	PCF54HC374	
CD54HC377	Signetics	PCF54HC377	
CD54HC384	Signetics	PCF54HC384	
CD54HC390	Motorola	MC54HC390	
	National	MM54HC390	
	Signetics	PCF54HC390	
CD54HC4002	Motorola	MC54HC4002	
	National	MM54HC4002	
	Signetics	PCF54HC4002	
CD54HC40104	Signetics	PCF54HC40104	
CD54HC40105	Signetics	PCF54HC40105	
CD54HC4017	Motorola	MC54HC4017	
	National	MM54HC4017	
	Signetics	PCF54HC4017	
CD54HC4020	Motorola	MC54HC4020	
	National	MM54HC4020	
	Signetics	PCF54HC4020	
CD54HC4024	Motorola	MC54HC4024	
	Signetics	PCF54HC4024	
CD54HC4040	Motorola	MC54HC4040	
	National	MM54HC4040	
	Signetics	PCF54HC4040	
CD54HC4049	Motorola	MC54HC4049	
	National	MM54HC4049	
	Signetics	PCF54HC4049	
CD54HC4050	Motorola	MC54HC4050	
	National	MM54HC4050	
	Signetics	PCF54HC4050	
CD54HC4051	Motorola	MC54HC4051	
	Signetics	PCF54HC4051	
CD54HC4052	Motorola	MC54HC4052	
	Signetics	PCF54HC4052	
CD54HC4053	Motorola	MC54HC4053	
	Signetics	PCF54HC4053	
CD54HC4060	Motorola	MC54HC4060	
	National	MM54HC4060	
	Signetics	PCF54HC4060	
CD54HC42	Motorola	MC54HC42	
	National	MM54HC42	
	Signetics	PCF54HC42	
CD54HC4511	Motorola	MC54HC4511	
	National	MM54HC4511	
	Signetics	PCF54HC4511	
CD54HC4514	Motorola	MC54HC4514	
	National	MM54HC4514	
	Signetics	PCF54HC4514	
CD54HC4520	Signetics	PCF54HC4520	
CD54HC4538	Motorola	MC54HC4538	
	National	MM54HC4538	
	Signetics	PCF54HC4538	
CD54HC533	Motorola	MC54HC533	
	National	MM54HC533	
	Signetics	PCF54HC533	
CD54HC534	Motorola	MC54HC534	
	National	MM54HC534	
	Signetics	PCF54HC534	
CD54HC541	Signetics	PCF54HC541	
CD54HC563	National	MM54HC563	
	Signetics	PCF54HC563	
CD54HC564	National	MM54HC564	
	Signetics	PCF54HC564	
CD54HC573	Motorola	MC54HC573	
	National	MM54HC573	
	Signetics	PCF54HC573	
CD54HC574	Motorola	MC54HC574	
	National	MM54HC574	
	Signetics	PCF54HC574	
CD54HC640	Motorola	MC54HC640	
	National	MM54HC640	
	Signetics	PCF54HC640	
CD54HC643	Motorola	MC54HC643	
	National	MM54HC643	
	Signetics	PCF54HC643	
CD54HC645	Motorola	MC54HC645	
	National	MM54HC645	
	Signetics	PCF54HC645	
CD54HC646	Motorola	MC54HC646	
	National	MM54HC646	
	Signetics	PCF54HC646	
CD54HC648	Motorola	MC54HC648	
	National	MM54HC648	
	Signetics	PCF54HC648	
CD54HC670	Signetics	PCF54HC670	
CD54HC688	Motorola	MC54HC688	
	National	MM54HC688	
	Signetics	PCF54HC688	
CD54HC73	Motorola	MC54HC73	
	National	MM54HC73	
	Signetics	PCF54HC73	
CD54HC74	Motorola	MC54HC74	
	National	MM54HC74	
	Signetics	PCF54HC74	
CD54HC75	Motorola	MC54HC75	
	National	MM54HC75	
	Signetics	PCF54HC75	
CD54HC76	Motorola	MC54HC76	
	National	MM54HC76	
	Signetics	PCF54HC76	
CD54HC85	Motorola	MC54HC85	
	National	MM54HC85	
	Signetics	PCF54HC85	
CD54HC86	Motorola	MC54HC86	
	National	MM54HC86	
	Signetics	PCF54HC86	
CD54HCT00	Signetics	PCF54HCT00	
CD54HCT02	Signetics	PCF54HCT02	
CD54HCT04	Signetics	PCF54HCT04	
CD54HCT08	Signetics	PCF54HCT08	
CD54HCT10	Signetics	PCF54HCT10	
CD54HCT107	Signetics	PCF54HCT107	
CD54HCT109	Signetics	PCF54HCT109	
CD54HCT11	Signetics	PCF54HCT11	
CD54HCT112	Signetics	PCF54HCT112	
CD54HCT123	Signetics	PCF54HCT123	
CD54HCT132	Signetics	PCF54HCT132	
CD54HCT133	Signetics	PCF54HCT133	
CD54HCT138	Motorola	MC54HCT138	
	Signetics	PCF54HCT138	
CD54HCT139	Signetics	PCF54HCT139	
CD54HCT14	Signetics	PCF54HCT14	
CD54HCT147	Signetics	PCF54HCT147	
CD54HCT151	Signetics	PCF54HCT151	
CD54HCT153	Signetics	PCF54HCT153	
CD54HCT154	Signetics	PCF54HCT154	
CD54HCT157	Signetics	PCF54HCT157	
CD54HCT158	Signetics	PCF54HCT158	
CD54HCT160	Signetics	PCF54HCT160	
CD54HCT161	Signetics	PCF54HCT161	
CD54HCT162	Signetics	PCF54HCT162	
CD54HCT163	Signetics	PCF54HCT163	
CD54HCT164	Signetics	PCF54HCT164	
CD54HCT165	Signetics	PCF54HCT165	
CD54HCT166	Signetics	PCF54HCT166	
CD54HCT173	Signetics	PCF54HCT173	
CD54HCT174	Signetics	PCF54HCT174	
CD54HCT175	Signetics	PCF54HCT175	
CD54HCT191	Signetics	PCF54HCT191	
CD54HCT192	Signetics	PCF54HCT192	
CD54HCT193	Signetics	PCF54HCT193	
CD54HCT194	Signetics	PCF54HCT194	
CD54HCT195	Signetics	PCF54HCT195	
CD54HCT20	Signetics	PCF54HCT20	
CD54HCT221	Signetics	PCF54HCT221	
CD54HCT238	Signetics	PCF54HCT238	
CD54HCT240	Motorola	MC54HCT240	
CD54HCT241	Motorola	MC54HCT241	
	Signetics	PCF54HCT241	
CD54HCT242	Signetics	PCF54HCT242	
CD54HCT243	Signetics	PCF54HCT243	
CD54HCT244	Motorola	MC54HCT244	
	Signetics	PCF54HCT244	
CD54HCT245	Motorola	MC54HCT245	
	Signetics	PCF54HCT245	
CD54HCT251	Signetics	PCF54HCT251	
CD54HCT253	Signetics	PCF54HCT253	
CD54HCT257	Signetics	PCF54HCT257	
CD54HCT259	Signetics	PCF54HCT259	
CD54HCT266	Signetics	PCF54HCT266	
CD54HCT27	Signetics	PCF54HCT27	
CD54HCT273	Signetics	PCF54HCT273	
CD54HCT280	Signetics	PCF54HCT280	
CD54HCT297	Signetics	PCF54HCT297	
CD54HCT299	Signetics	PCF54HCT299	
CD54HCT30	Signetics	PCF54HCT30	
CD54HCT32	Signetics	PCF54HCT32	
CD54HCT354	Signetics	PCF54HCT354	
CD54HCT356	Signetics	PCF54HCT356	
CD54HCT365	Signetics	PCF54HCT365	
CD54HCT366	Signetics	PCF54HCT366	
CD54HCT367	Signetics	PCF54HCT367	
CD54HCT368	Signetics	PCF54HCT368	
CD54HCT373	Motorola	MC54HCT373	
	Signetics	PCF54HCT373	
CD54HCT374	Motorola	MC54HCT374	
CD54HCT377	Signetics	PCF54HCT377	
CD54HCT384	Signetics	PCF54HCT384	
CD54HCT390	Signetics	PCF54HCT390	
CD54HCT393	Signetics	PCF54HCT393	
CD54HCT4002	Signetics	PCF54HCT4002	
CD54HCT40104	Signetics	PCF54HCT40104	
CD54HCT40105	Signetics	PCF54HCT40105	
CD54HCT4017	Signetics	PCF54HCT4017	
CD54HCT4020	Signetics	PCF54HCT4020	
CD54HCT4024	Signetics	PCF54HCT4024	
CD54HCT4040	Signetics	PCF54HCT4040	
CD54HCT4049	Signetics	PCF54HCT4049	
CD54HCT4050	Signetics	PCF54HCT4050	
CD54HCT4051	Signetics	PCF54HCT4051	
CD54HCT4052	Signetics	PCF54HCT4052	
CD54HCT4053	Signetics	PCF54HCT4053	
CD54HCT4060	Signetics	PCF54HCT4060	
CD54HCT42	Signetics	PCF54HCT42	
CD54HCT4511	Signetics	PCF54HCT4511	
CD54HCT4514	Signetics	PCF54HCT4514	
CD54HCT4520	Signetics	PCF54HCT4520	
CD54HCT4538	Signetics	PCF54HCT4538	
CD54HCT533	Motorola	MC54HCT533	
	Signetics	PCF54HCT533	
CD54HCT534	Motorola	MC54HCT534	
CD54HCT540	Signetics	PCF54HCT540	
CD54HCT541	Signetics	PCF54HCT541	
CD54HCT563	Signetics	PCF54HCT563	
CD54HCT564	Signetics	PCF54HCT564	
	Zytrex	ZX74HCT564-2	
CD54HCT573	Signetics	PCF54HCT573	
CD54HCT574	Signetics	PCF54HCT574	
CD54HCT640	Motorola	MC54HCT640	
	Signetics	PCF54HCT640	
CD54HCT643	Motorola	MC54HCT643	
	Signetics	PCF54HCT643	
CD54HCT645	Signetics	PCF54HCT645	
CD54HCT646	Signetics	PCF54HCT646	
CD54HCT648	Signetics	PCF54HCT648	
CD54HCT670	Signetics	PCF54HCT670	
CD54HCT688	Signetics	PCF54HCT688	
CD54HCT73	Signetics	PCF54HCT73	
CD54HCT74	Signetics	PCF54HCT74	
CD54HCT75	Signetics	PCF54HCT75	
CD54HCT76	Signetics	PCF54HCT76	
CD54HCT85	Signetics	PCF54HCT85	
CD54HCT86	Signetics	PCF54HCT86	
CD54HCU04	Motorola	MC54HCU04	
	Signetics	PCF54HCU04	
CD54HG393	Motorola	MC54HC393	
	National	MM54GC393	
	Signetics	PCF54HC393	
CD55HC540	Signetics	PCF54HC540	
CD74HC00	Motorola	MC74HC00	
	National	MM74HC00	
	SPI	**SP74HC00**	**848**
	Signetics	PCF74HC00	
	Toshiba	TC40H000	
CD74HC02	Motorola	MC74HC02	
	National	MM74HC02	
	SPI	**SP74HC02**	**848**
	Signetics	PCF74HC02	
	Toshiba	TC40H002	
CD74HC04	Motorola	MC74HC04	
	National	MM74HC04	
	SPI	**SP74HC04**	**848**
	Toshiba	TC40H004	
CD74HC08	Motorola	MC74HC08	
	National	MM74HC08	

(Continued)

◆ Discontinued

The manufacturers report their devices can be used as direct replacements.
Performance details often differ, so compare the specifications considering your requirements.

RCA Solid State Division (Cont'd)

Manufacturer Device	Replacement Source	Device	IC Master Page
CD74HC08	**SPI**	**SP74HC08**	**848**
	Signetics	PCF74HC08	
CD74HC10	Motorola	MC74HC10	
	National	MM74HC10	
	SPI	**SP74HC10**	**848**
	Signetics	PCF74HC10	
	SiliconG	SG75474	
	Toshiba	TC40H010	
CD74HC107	Motorola	MC74HC107	
	National	MM74HC107	
	SPI	**SP74HC107**	**848**
	Signetics	PCF74HC107	
	Toshiba	TC40H107	
CD74HC109	Motorola	MC74HC109	
	National	MM74HC109	
	SPI	**SP74HC109**	**848**
	Signetics	PCF74HC109	
CD74HC11	Motorola	MC74HC11	
	National	MM74HC11	
	SPI	**SP74HC11**	**848**
	Signetics	PCF74HC11	
	Toshiba	TC40H011	
CD74HC112	Motorola	MC74HC112	
	National	MM74HC112	
	SPI	SP74HC112N	
	Signetics	PCF74HC112	
CD74HC123	Motorola	MC74HC123	
	National	MM74HC123	
	Signetics	PCF74HC123	
CD74HC132	Motorola	MC74HC132	
	National	MM74HC132	
	SPI	**SP74HC132**	**848**
	Signetics	PCF74HC132	
CD74HC133	Motorola	MC74HC133	
	National	MM74HC133	
	SPI	**SP74HC133**	**848**
	Signetics	PCF74HC133	
CD74HC138	Motorola	MC74HC138	
	National	MM74HC138	
	SPI	**SP74HC138**	**848**
	Signetics	PCF74HC138	
CD74HC139	Motorola	MC74HC139	
	National	MM74HC139	
	SPI	**SP74HC139**	**848**
	Signetics	PCF74HC139	
	Toshiba	TC40H139	
CD74HC14	Motorola	MC74HC14	
	National	MM74HC14	
	SPI	**SP74HC14**	**848**
	Signetics	PCF74HC14	
CD74HC147	Motorola	MC74HC147	
	National	MM74HC147	
	SPI	**SP74HC147**	**848**
	Signetics	PCF74HC147	
CD74HC151	Motorola	MC74HC151	
	National	MM74HC151	
	SPI	**SP74HC151**	**848**
	Signetics	PCF74HC151	
CD74HC153	Motorola	MC74HC153	
	National	MM74HC153	
	SPI	**SP74HC153**	**848**
	Signetics	PCF74HC153	
	Toshiba	TC40H153	
CD74HC154	Motorola	MC74HC154	
	National	MM74HC154	
	Signetics	PCF74HC154	
CD74HC157	Motorola	MC74HC157	
	National	MM74HC157	
	SPI	**SP74HC157**	**848**
	Signetics	PCF74HC157	
	Toshiba	TC40H157	
CD74HC158	Motorola	MC74HC158	
	National	MM74HC158	
	SPI	**SP74HC158**	**848**
	Signetics	PCF74HC158	
	Toshiba	TC40H158	
CD74HC160	Motorola	MC74HC160	
	National	MM74HC160	
	SPI	**SP74HC160**	**848**
	Signetics	PCF74HC160	
CD74HC161	Motorola	MC74HC161	
	National	MM74HC161	
	SPI	**SP74HC161**	**848**
	Signetics	PCF74HC161	
CD74HC162	Motorola	MC74HC162	
	National	MM74HC162	
	SPI	**SP74HC162**	**848**
	Signetics	PCF74HC162	
CD74HC163	Motorola	MC74HC163	
	National	MM74HC163	
	SPI	**SP74HC163**	**848**
	Signetics	PCF74HC163	
CD74HC164	Motorola	MC74HC164	
	National	MM74HC164	
	SPI	SP74HC164	
	Signetics	PCF74HC164	
CD74HC165	Motorola	MC74HC165	
	National	MM74HC165	
	SPI	SP74HC165	
	Signetics	PCF74HC165	
CD74HC166	Signetics	PCF74HC166	
CD74HC173	Motorola	MC74HC173	
	National	MM74HC173	
	SPI	**SP74HC173**	**848**
	Signetics	PCF74HC173	
CD74HC174	Motorola	MC74HC174	
	National	MM74HC174	
	SPI	**SP74HC174**	**848**
	Signetics	PCF74HC174	
	Toshiba	TC40H174	
CD74HC175	Motorola	MC74HC175	
	National	MM74HC175	
	SPI	**SP74HC175**	**848**
	Signetics	PCF74HC175	
	Toshiba	TC40H175	
CD74HC191	Signetics	PCF74HC191	
CD74HC192	Motorola	MC74HC192	
	National	MM74HC192	
	SPI	**SP74HC192**	**848**
	Signetics	PCF74HC192	
	Toshiba	TC40H192	
CD74HC193	Motorola	MC74HC193	
	National	MM74HC193	
	SPI	**SP74HC193**	**848**
	Signetics	PCF74HC193	
	Toshiba	TC40H193	
CD74HC194	Motorola	MC74HC194	
	National	MM74HC194	
	SPI	SP74HC194	
	Signetics	PCF74HC194	
CD74HC195	Motorola	MC74HC195	
	National	MM74HC195	
	SPI	SP74HC195	
	Signetics	PCF74HC195	
CD74HC20	Motorola	MC74HC20	
	National	MM74HC20	
	SPI	**SP74HC20**	**848**
	Signetics	PCF74HC20	
	Toshiba	TC40H020	
CD74HC221	Motorola	MC74HC221	
	National	MM74HC221	
	Signetics	PCF74HC221	
CD74HC238	SPI	SP74HC238	
	Signetics	PCF74HC238	
CD74HC240	Motorola	MC74HC240	
	National	MM74HC240	
	SPI	**SP74HC240**	**848**
	Signetics	PCF74HC240	
	Toshiba	TC40H240	
CD74HC241	Motorola	MC74HC241	
	National	MM74HC241	
	SPI	**SP74HC241**	**848**
	Signetics	PCF74HC241	
CD74HC242	Motorola	MC74HC242	
	National	MM74HC242	
	RCA	SGN	
	SPI	SP74HC242	
	Signetics	PCF74HC242	
CD74HC243	Motorola	MC74HC243	
	National	MM74HC243	
	Signetics	PCF74HC243	
CD74HC244	Motorola	MC74HC244	
	National	MM74HC244	
	Signetics	PCF74HC244	
CD74HC245	Motorola	MC74HC245	
	National	MM74HC245	
	Signetics	PCF74HC245	
CD74HC251	Motorola	MC74HC251	
	National	MM74HC251	
	SPI	**SP74HC251**	**848**
	Signetics	PCF74HC251	
CD74HC253	Motorola	MC74HC253	
	National	MM74HC253	
	SPI	**SP74HC253**	**848**
	Signetics	PCF74HC253	
CD74HC257	Motorola	MC74HC257	
	National	MM74HC257	
	SPI	**SP74HC257**	**848**
	Signetics	PCF74HC257	
CD74HC259	Motorola	MC74HC259	
	National	MM74HC259	
	Signetics	PCF74HC259	
CD74HC266	Motorola	MC74HC266	
	National	MM74HC266	
	SPI	**SP74HC266**	**848**
	Signetics	PCF74HC266	
CD74HC27	Motorola	MC74HC27	
	National	MM74HC27	
	SPI	**SP74HC27**	**848**
	Signetics	PCF74HC27	
	Toshiba	TC40H027	
CD74HC273	Motorola	MC74HC273	
	SPI	**SP74HC273**	**848**
	Signetics	PCF74HC273	
CD74HC280	Motorola	MC74HC280	
	National	MM74HC280	
	SPI	**SP74HC280**	**848**
	Signetics	PCF74HC280	
CD74HC297	Signetics	PCF74HC297	
CD74HC299	Motorola	MC74HC299	
	National	MM74HC299	
	Signetics	PCF74HC299	
CD74HC30	Motorola	MC74HC30	
	National	MM74HC30	
	SPI	**SP74HC30**	**848**
	Signetics	PCF74HC30	
CD74HC32	Motorola	MC74HC32	
	National	MM74HC32	
	SPI	**SP74HC32**	**848**
	Signetics	PCF74HC32	
	Toshiba	TC40H032	
CD74HC354	Motorola	MC74HC354	
	National	MM74HC354	
	Signetics	PCF74HC354	
CD74HC356	Motorola	MC74HC356	
	National	MM74HC356	
	Signetics	PCF74HC356	
CD74HC365	Motorola	MC74HC365	
	National	MM74HC365	
	SPI	**SP74HC365**	**848**
CD74HC366	Motorola	MC74HC366	
	National	MM74HC366	
	Signetics	PCF74HC366	
CD74HC367	Motorola	MC74HC367	
	National	MM74HC367	
	SPI	SP74HC367	
	Signetics	PCF74HC367	
CD74HC368	Motorola	MC74HC368	
	National	MM74HC368	
	Signetics	PCF74HC368	
CD74HC373	Motorola	MC74HC373	
	National	MM74HC373	
	SPI	**SP74HC373**	**848**
	Signetics	PCF74HC373	
CD74HC374	Motorola	MC74HC374	
	National	MM74HC374	
	SPI	**SP74HC374**	**848**
	Signetics	PCF74HC374	
CD74HC377	Signetics	PCF74HC377	
CD74HC384	Signetics	PCF74HC384	
CD74HC390	Motorola	MC74HC390	
	National	MM74HC390	
	Signetics	PCF74HC390	
CD74HC393	Motorola	MC74HC393	
	National	MM74HC393	
	SPI	**SP74HC393**	**848**
	Signetics	PCF74HC393	
CD74HC4002	Motorola	MC74HC4002	
	National	MM74HC4002	
	SPI	SP74HC4002	
	Signetics	PCF74HC4002	
CD74HC40104	Signetics	PCF74HC40104	
CD74HC40105	Signetics	PCF74HC40105	
CD74HC4017	Motorola	MC74HC4017	
	National	MM74HC4017	
	SPI	**SP74HC4017**	**848**
	Signetics	PCF74HC4017	
CD74HC4020	Motorola	MC74HC4020	
	National	MM74HC4020	
	SPI	**SP74HC4020**	**848**
	Signetics	PCF74HC4020	
CD74HC4024	Motorola	MC74HC4024	
	Signetics	PCF74HC4024	
CD74HC4040	Motorola	MC74HC4040	
	National	MM74HC4040	
	Signetics	PCF74HC4040	
CD74HC4049	Motorola	MC74HC4049	
	National	MM74HC4049	
	Signetics	PCF74HC4049	
CD74HC4050	Motorola	MC74HC4050	
	National	MM74HC4050	
	Signetics	PCF74HC4050	
CD74HC4051	Motorola	MC74HC4051	
	Signetics	PCF74HC4051	
CD74HC4052	Motorola	MC74HC4052	
	Signetics	PCF74HC4052	
CD74HC4053	Motorola	MC74HC4053	
	Signetics	PCF74HC4053	
CD74HC4060	Motorola	MC74HC4060	
	National	MM74HC4060	
	Signetics	PCF74HC4060	
CD74HC42	Motorola	MC74HC42	
	National	MM74HC42	
	SPI	**SP74HC42**	**848**
	Signetics	PCF74HC42	
CD74HC4511	Motorola	MC74HC4511	
	National	MM74HC4511	
	Signetics	PCF74HC4511	
CD74HC4514	Motorola	MC74HC4514	
	National	MM74HC4514	
	Signetics	PCF74HC4514	
CD74HC4520	Motorola	MC74HC4520	
	Signetics	PCF74HC4520	
CD74HC4538	Motorola	MC74HC4538	
	National	MM74HC4538	
	Signetics	PCF74HC4538	
CD74HC533	Motorola	MC74HC533	
	National	MM74HC533	
	SPI	**SP74HC533**	**848**
	Signetics	PCF74HC533	
CD74HC534	Motorola	MC74HC534	
	National	MM74HC534	
	SPI	SP74HC534	
	Signetics	PCF74HC534	
CD74HC540	Motorola	MC74HC540	
	Signetics	PCF74HC540	
CD74HC541	Motorola	MC74HC541	
	Signetics	PCF74HC541	
CD74HC563	Motorola	MC74HC563	
	National	MM74HC563	
	Signetics	PCF74HC563	
CD74HC564	Motorola	MC74HC564	
	National	MM74HC564	
	Signetics	PCF74HC564	
CD74HC573	Motorola	MC74HC573	
	National	MM74HC573	
	SPI	**SP74HC573**	**848**
	Signetics	PCF74HC573	
CD74HC574	Motorola	MC74HC574	
	National	MM74HC574	
	SPI	**SP74HC574**	**848**
	Signetics	PCF74HC574	
CD74HC640	Motorola	MC74HC640	
	National	MM74HC640	
	Signetics	PCF74HC640	
CD74HC643	Motorola	MC74HC643	
	National	MM74HC643	
	Signetics	PCF74HC643	
CD74HC645	Motorola	MC74HC645	
	National	MM74HC645	
	Signetics	PCF74HC645	
CD74HC646	Motorola	MC74HC646	
	National	MM74HC646	
	Signetics	PCF74HC646	
CD74HC648	Motorola	MC74HC648	
	National	MM74HC648	
	Signetics	PCF74HC648	
CD74HC670	Signetics	PCF74HC670	
CD74HC688	Motorola	MC74HC688	
	National	MM74HC688	
	Signetics	PCF74HC688	
CD74HC73	Motorola	MC74HC73	
	National	MM74HC73	
	SPI	**SP74HC73**	**848**
	Signetics	PCF74HC73	
CD74HC74	Motorola	MC74HC74	
	National	MM74HC74	
	SPI	**SP74HC74**	**848**
	Signetics	PCF74HC74	
	Toshiba	TC40H074	
CD74HC75	Motorola	MC74HC75	
	National	MM74HC75	
	SPI	**SP74HC75**	**848**
	Signetics	PCF74HC75	
CD74HC76	Motorola	MC74HC76	
	National	MM74HC76	
	SPI	**SP74HC76**	**848**
	Signetics	PCF74HC76	
	Toshiba	TC40H076	
CD74HC85	Motorola	MC74HC85	
	National	MM74HC85	

(Continued)

◆ Discontinued

Bold face device numbers indicate manufacturers data is provided in the IC Master on the pages noted.

RCA Solid State Division (Cont'd)

Manufacturer Device	Replacement Source	Device	IC Master Page
CD74HC85	SPI	SP74HC85	
	Signetics	PCF74HC85	
CD74HC86	Motorola	MC74HC86	
	National	MM74HC86	
	SPI	SP74HC86N	
	Signetics	PCF74HC86	
CD74HCT00	Motorola	MC74HCT00	
CD74HCT02	Signetics	PCF74HCT02	
CD74HCT04	Motorola	MC74HCT04	
CD74HCT08	Signetics	PCF74HCT08	
CD74HCT10	Signetics	PCF74HCT10	
CD74HCT107	Signetics	PCF74HCT107	
CD74HCT109	Signetics	PCF74HCT109	
CD74HCT11	Signetics	PCF74HCT11	
CD74HCT112	Signetics	PCF74HCT112	
CD74HCT123	Signetics	PCF74HCT123	
CD74HCT132	Signetics	PCF74HCT132	
CD74HCT133	Signetics	PCF74HCT133	
CD74HCT138	Motorola	MC74HCT138	
	SPI	**SP74HCT138**	**844**
	Zytrex	ZX74HCT138-2	
CD74HCT139	**SPI**	**SP74HCT139**	**844**
	Signetics	PCF74HCT139	
	Zytrex	ZX74HCT139-2	
CD74HCT14	Signetics	PCF74HCT14	
CD74HCT147	Signetics	PCF74HCT147	
CD74HCT151	Signetics	PCF74HCT151	
CD74HCT153	Signetics	PCF74HCT153	
CD74HCT154	Signetics	PCF74HCT154	
CD74HCT157	Signetics	PCF74HCT157	
CD74HCT158	Signetics	PCF74HCT158	
CD74HCT160	Signetics	PCF74HCT160	
	Zytrex	ZX74HCT160-2	
CD74HCT161	Signetics	PCF74HCT161	
	Zytrex	ZX74HCT161-2	
CD74HCT162	Signetics	PCF74HCT162	
	Zytrex	ZX74HCT162-2	
CD74HCT163	Signetics	PCF74HCT163	
	Zytrex	ZX74HCT163-2	
CD74HCT164	Signetics	PCF74HCT164	
CD74HCT165	Signetics	PCF74HCT165	
CD74HCT166	Signetics	PCF74HCT166	
CD74HCT173	Signetics	PCF74HCT173	
CD74HCT174	Signetics	PCF74HCT174	
CD74HCT175	Signetics	PCF74HCT175	
CD74HCT191	Signetics	PCF74HCT191	
CD74HCT192	Signetics	PCF74HCT192	
CD74HCT193	Signetics	PCF74HCT193	
CD74HCT194	Signetics	PCF74HCT194	
CD74HCT195	Signetics	PCF74HCT195	
CD74HCT20	Signetics	PCF74HCT20	
CD74HCT221	Signetics	PCF74HCT221	
CD74HCT238	Signetics	PCF74HCT238	
CD74HCT240	Motorola	MC74HCT240	
	SPI	**SP74HCT240**	**844**
	Signetics	PCF74HCT240	
	Zytrex	ZX74HCT240-2	
CD74HCT241	Motorola	MC74HCT241	
	SPI	**SP74HCT241**	**844**
	Signetics	PCF74HCT241	
	Zytrex	ZX74HCT241-2	
CD74HCT242	Signetics	PCF74HCT242	
CD74HCT243	Signetics	PCF74HCT243	
CD74HCT244	Motorola	MC74HCT244	
	SPI	**SP74HCT244**	**844**
	Signetics	PCF74HCT244	
	Zytrex	ZX74HCT244-2	
CD74HCT251	Signetics	PCF74HCT251	
CD74HCT253	Signetics	PCF74HCT253	
CD74HCT257	Signetics	PCF74HCT257	
CD74HCT259	Signetics	PCF74HCT259	
CD74HCT266	Signetics	PCF74HCT266	
CD74HCT27	Signetics	PCF74HCT27	
CD74HCT273	Signetics	PCF74HCT273	
CD74HCT280	Signetics	PCF74HCT280	
CD74HCT297	Signetics	PCF74HCT297	
CD74HCT299	Signetics	PCF74HCT299	
CD74HCT30	Signetics	PCF74HCT30	
CD74HCT32	Signetics	PCF74HCT32	
CD74HCT354	Signetics	PCF74HCT354	
CD74HCT356	Signetics	PCF74HCT356	
CD74HCT365	Signetics	PCF74HCT365	
CD74HCT366	Signetics	PCF74HCT366	
CD74HCT367	Signetics	PCF74HCT367	
CD74HCT368	Signetics	PCF74HCT368	
CD74HCT373	Motorola	MC74HCT373	
	SPI	**SP74HCT373**	**844**
	Zytrex	ZX74HCT373-2	
CD74HCT374	Motorola	MC74HCT374	
	SPI	**SP74HCT374**	**844**
	Zytrex	ZX74HCT374-2	
CD74HCT377	Signetics	PCF74HCT377	
CD74HCT384	Signetics	PCF74HCT384	
CD74HCT390	Signetics	PCF74HCT390	
CD74HCT393	Signetics	PCF74HCT393	
CD74HCT4002	Signetics	PCF74HCT4002	
CD74HCT40104	Signetics	PCF74HCT40104	
CD74HCT40105	Signetics	PCF74HCT40105	
CD74HCT4017	Signetics	PCF74HCT4017	
CD74HCT4020	Signetics	PCF74HCT4020	
CD74HCT4024	Signetics	PCF74HCT4024	
CD74HCT4040	Signetics	PCF74HCT4040	
CD74HCT4049	Signetics	PCF74HCT4049	
CD74HCT4050	Signetics	PCF74HCT4050	
CD74HCT4051	Signetics	PCF74HCT4051	
CD74HCT4052	Signetics	PCF74HCT4052	
CD74HCT4053	Signetics	PCF74HCT4053	
CD74HCT4060	Signetics	PCF74HCT4060	
CD74HCT42	Signetics	PCF74HCT42	
CD74HCT4511	Signetics	PCF74HCT4511	
CD74HCT4514	Signetics	PCF74HCT4514	
CD74HCT4538	Signetics	PCF74HCT4538	
CD74HCT53	**SPI**	**SP74HCT573**	**844**
	Zytrex	ZX74HCT573-2	
CD74HCT533	Motorola	MC74HCT533	
	Zytrex	ZX74HCT533	
CD74HCT534	Motorola	MC74HCT534	
	Signetics	PCF74HCT534	
	Zytrex	ZX74HCT534-2	
CD74HCT540	Motorola	MC74HCT540	
	SPI	**SP74HCT540**	**844**
	Zytrex	ZX74HCT540-2	
CD74HCT541	Motorola	MC74HCT542	
	SPI	**SP74HCT541**	**844**
	Zytrex	ZX74HCT542-2	
CD74HCT563	Signetics	PCF74HCT563	
CD74HCT564	Signetics	PCF74HCT564	
CD74HCT573	Signetics	PCF74HCT573	
CD74HCT574	Signetics	PCF74HCT574	
CD74HCT640	Motorola	MC74HCT640	
	Signetics	PCF74HCT640	
	Zytrex	ZX74HCT640-2	
CD74HCT643	Motorola	MC74HCT643	
	Signetics	PCF74HCT643	
	Zytrex	ZX74HCT643-2	
CD74HCT645	Signetics	PCF74HCT645	
CD74HCT646	Signetics	PCF74HCT646	
CD74HCT648	Signetics	PCF74HCT648	
CD74HCT670	Signetics	PCF74HCT670	
CD74HCT688	Signetics	PCF74HCT688	
CD74HCT73	Signetics	PCF74HCT73	
CD74HCT74	Signetics	PCF74HCT74	
CD74HCT75	Signetics	PCF74HCT75	
CD74HCT76	Signetics	PCF74HCT76	
CD74HCT85	Signetics	PCF74HCT85	
CD74HCT86	Signetics	PCF74HCT86	
CD74HCU04	Motorola	MC74HCU04	
CDM5104	Fujitsu	MB8404	
	Harris	HM6504	
	Intersil	IM6504	
	MicroPwr	MP6504	
	National	NMC6504	
	SMOS	SRM6504	
	Toshiba	TC5504	
CDM53128	SSS	SCM23C128	
CDM53256	SSS	SCM23C256	
	Toshiba	TMM23256	
CDM5332	AMD	AM9233	
	AMI	**S2333**	**3932**
	Fairchild	F3533	
	GI	R09433	
	Intel	2332	
	NCR	2333	
		NCR2333	
	Signetics	2332	
	SSS	SCM23C33	
	Synertek	**SY2333**	**4211**
	Universal	UM2333-45	
	VTI	**VT2333**	**4249**
CDM5333	AMD	AM9232	
	AMI	S68322	
		S68A332	
	Fairchild	F3532	
	GI	R094132	
		T094132	
	GTEMicro	2332	
	Hitachi	HN46332	
	Intersil	IM7332	
	Motorola	MC68332	
		MCM68332	
			(Continued)
CDM5333	**Motorola**	**MCM68A332**	**4048**
	National	MM52132	
	NCR	2332	
		NCR2332	
	NEC	**μPD2332**	**4100**
	OKI	**MSM2932**	**4118**
	Rockwell	R2332	
	SiliconG	SG3532	
	SSS	SCM23C32	
	SMC	ROM4732	
	Synertek	**SY2332**	**4211**
	TI	**TMS4732**	**4226**
	Toshiba	TM2332	
		TMM333	
	Universal	UM2332	
	VTI	**VT2332**	**4249**
CDM5364	AMI	S68364	
	GI	R09464	
	GTEMicro	G5364	
	Intersil	IM7364	
	MicroPwr	MP2364	
	Mitsubishi	M5L2364	
	Mostek	MK36000	
	Motorola	**MCM68364**	
			4048,4054
	National	MM5235	
	NCR	NCR2364	
	SMOS	SMM2364	
	SGS	M36000	
	Signetics	2664A	
	SSS	SCM23C64	
		SCM23C65	
	SMC	ROM36000	
	Synertek	**SY2364**	**4211**
	TI	**TMS4764**	**4225**
	Toshiba	TM2364	
	VTI	**VT2364**	**4250**
CDM5365	AMD	AM9265	
	GI	R09864	
	GTEMicro	G5365	
	Hitachi	HN61364	
	Mostek	MK37000	
	Signetics	**2364-20**	**4196**
	Synertek	**SY2365**	**4211**
	Toshiba	TMM2365	
	VTI	**VT2365**	**4251**
CDM6116	Fujitsu	MB8416	
	Harris	HM65162	
	Hitachi	HM6116	
	IDT	IDT6116	
	MicroPwr	MP6116	
	Mostek	MK6116	
	Motorola	MCM6116	
	NEC	**μPD446**	**4090**
	SMOS	SRM2016	
	Toshiba	TC5517A	
		TC5517B	
CDM6117	Fujitsu	MB8417	
	Harris	HM65172	
	MicroPwr	MP6118	
	SMOS	SRM2017	
	Toshiba	TC5516A	
CDM6118	Fujitsu	MB8418	
	Hitachi	HM6117	
	MicroPwr	MP6117	
	NEC	**μPD449**	**4093**
	SMOS	SRM2018	
	Toshiba	TC5518B	
CDP1802	Hughes	HCMP1802A	
CDP1823	Hughes	HCMP1823	
CDP1824	Hughes	HCMP1824	
CDP1831	Hughes	HCMP1831	
CDP1832	Hughes	HCMP1832	
CDP1833	Hughes	HCMP1833	
CDP1834	Hughes	HCMP1834	
CDP1835	Hughes	HCMP1835	
CDP1837	Hughes	HCMP1837	
CDP1851	Hughes	HCMP1851	
CDP1852	Hughes	HCMP1852	
CDP1853	Hughes	HCMP1853	
CDP1854	Hughes	HCMP1854	
CDP1855	Hughes	HCMP1855	
CDP1856	Hughes	HCMP1856	
CDP1857	Hughes	HCMP1857	
CDP1858	Hughes	HCMP1858	
CDP1859	Hughes	HCMP1859	
CDP1861	Hughes	HCMP1861	
CDP1873	GTEMicro	G74SC138	
	Mitel	MD74SC138	
	Plessey	MV74SC138	
	SPI	SP74SC138	
CDP6402	AMI	S1602	
	Fairchild	3730	
		F6850	**1463**
	Fujitsu	MB8868A	
	GI	AY3-1015	
	Hitachi	HD6850	
		HD68A50	
	Motorola	**MC6850**	**1505**
	National	MM5303	
	SMC	COM2017	
		COM2502H	
		COM8017	
	Thomson-CSF		
		EF6850	
	Western	TR1402	
		TR1602	
		TR1863	
LL5000	LSIComp	LL5000	
	SGS	LL5000	
	Toshiba	LL5000	
LM1458	AMD	AM1458	
	Exar	XR1458	
		XR4558	
	Fairchild	μA1458	
	Harris	HA-2655	
	Hitachi	HA17458	
	MicroPwr	MPOP14	
	Motorola	MC1458	
		MC4558C	
		RC4558	
	National	LM1458	
	NEC	μPC1458	
		μPC4558	
	PMI	PM1458	
	Raytheon	RC1458	
		RC4558	**3592**
	RCA	CA1458	
		RC4558	
		SSS1458	
	Sanyo	LA6458A	
	Signetics	MC1458	
		NE4558	
	SiliconG	SG1458	
	Ti	MC1458	
		RC4558	
LM1558	AMD	AM1558	
	Exar	XR1558	
	Fairchild	μA1558	
	Harris	**HA-2650**	**3414**
	Motorola	MC1558	
		MC4558	
		RC1558	
	National	LM1558	
	PMI	**OP-14**	**3566**
		PM1558	
	Raytheon	RC1558	
		RM1558	
		RM4558	
	RCA	CA1558	
		SSS1558	
	Signetics	MC1558	
	SiliconG	SG1558	
	TI	MC1558	
		RM4558	
LM211	AMD	LM211	
	AD	AD211	
	Motorola	LM211	
	National	LM211	
	Signetics	LM211	
	SiliconG	SG211	
	TI	LM211	
	Thomson-CSF		
		SFC2211	
LM301	AD	AD301	
	Fairchild	μA301A	
	Intersil	AD301	
	LinearTech	LM301	
		LM301A	
	Motorola	LM301	
	National	LM301	
		LM301A	
	NEC	μPC157	
		μPC301	
	Raytheon	LM301	
	RCA	CA301	
	SiliconG	SG301	
	TI	LM301	
		LM301A	
	Thomson-CSF		
		SFC2301	
	Toshiba	TA7506	

◆ Discontinued

The manufacturers report their devices can be used as direct replacements.
Performance details often differ, so compare the specifications considering your requirements.

RCA Solid State Division (Cont'd)

Manufacturer Device	Replacement Source	Device	IC Master Page
LM311	AMD	LM311	
	AD	AD311	
	Fairchild	μA2903	
		μA311	
	Intersil	LM311	
	Motorola	LM2903	
		LM311	
	National	LM2903	
		LM311	
	NEC	μPC271	
		μPC311	
	Raytheon	LM311	
	RCA	**CA311**	**3598**
	Signetics	LM2903	
		LM311	
	SiliconG	SG311	
	TI	LM2903	
		LM311	
	Thomson-CSF		
		SFC2311	
		SFC3111	
LM324	AMD	LM324	
	Exar	**XR3403**	**3378**
		XR3403C	
	Fairchild	μA324	
		μA3403	
	Motorola	LM324	
		MC3403	
	National	LM324	
	NEC	μPC324	
	Raytheon	LM324	
		RC3403	
		RC4137	
	RCA	CA324	
	Sanyo	LA6324	
	Signetics	LM324	
		MC3403	
	SiliconG	SG324	
	TI	LM324	
		MC3403	
	Thomson-CSF		
		TDB0124	
LM339	AMD	LM339	
		LM339A	
	Fairchild	μA339	
	Hitachi	HA17901	
	Motorola	LM339	
	National	LM339	♦
	NEC	μPC339	
	PMI	CMP-04	
		PM339A	
	Raytheon	LM339	
	RCA	**CA339**	**3599**
		CA339A	**3599**
	SiliconG	SG339	
	TI	LM339	
	Thomson-CSF		
		TDB0139	
LM358	Motorola	LM358	
	National	LM358A	
	NEC	μPC358	
	RCA	CA358A	
	Sanyo	LA6358	
	Signetics	LM358	
		NE532	
	TI	LM358	
LM723	Fairchild	μA723	
	Hitachi	HA17723	
	Intersil	LM723	
	Motorola	**MC1723**	**3532**
	National	LM723	
	Raytheon	RC723	
		RM723	
	RCA	**CA723**	**3602**
	SGS	L123	
	Signetics	μA723	
	SiliconG	SG723	
	TI	μA723	
	Thomson-CSF		
		SFC2723	
LM748	AMD	LM201	
	AD	AD201	
	Fairchild	μA201	
		μA748	
	Intersil	LM748	
		μA748	
	Motorola	LM201	
		MC1748	
	National	LM201	

(Continued)

Manufacturer Device	Replacement Source	Device	IC Master Page
LM748	National	LM748	
	Plessey	SL748	
	RCA	CA201	
		CA748	
	SiliconG	SG201	
		SG748	
	TI	LM201	
		SN72748P	
		μA748	
	Thomson-CSF		
		SFC2201	
		SFC2748	
♦MWS5114	Fujitsu	MB8414	
	Harris	HM6514	
	Hitachi	HM4334	
	Intersil	IM6514	
	MicroPwr	MP6514	
	Mitsubishi	M58981	
	National	NMC6514	
	NEC	μPD6514	
	OKI	**MSM5115**	**4118**
	RCA	MWS5514	
	SMOS	SRM6514	
	Toshiba	TC5514	
MWS5514	Fujitsu	MB8414	
	Harris	HM6514	
	Hitachi	HM4334	
	Intersil	IM6514	
	MicroPwr	MP6514	
	Mitsubishi	M58981	
	National	NMC6514	
	NEC	μPD6514	
	OKI	**MSM5115**	**4118**
	SMOS	SRM6514	
	Toshiba	TC5514	
RC4558	AMD	AM1458	
	Exar	XR1458	
		XR4558	
	Fairchild	μA1458	
	Harris	HA-2655	
	Hitachi	HA17458	
	MicroPwr	MPOP14	
	Motorola	MC1458	
		MC4558C	
		RC4558	
	National	LM1458	
	NEC	μPC1458	
		μPC4558	
	PMI	PM1458	
	Raytheon	RC1458	
		RC4558	**3592**
	RCA	CA1458	
		LM1458	
		SSS1458	
	Sanyo	LA6458A	
	Signetics	MC1458	
		NE4558	
	SiliconG	SG1458	
	TI	MC1458	
		RC4558	
SGN	Motorola	MC74HC242	
	National	MM74HC242	
	RCA	CD74HC242	
	SPI	SP74HC242	
	Signetics	PCF74HC242	

RIFA

Manufacturer Device	Replacement Source	Device	IC Master Page
PBD352301	Exar	XR2001	
		XR2201	
	Fairchild	9665	
	Motorola	**MC1411**	**3064**
		ULN2001	
		XR2201	
	NEC	μPA2001	
	Sanyo	LB1231	
	SGS	L201	
	SiliconG	SG2001	
	Sprague	ULN-2001	
		ULN-2021	
		ULQ-2002	
		ULS-2001	
	TI	ULN2001	
	Toshiba	TD62001	
PBD352304	Exar	XR2002	
		XR2202	
	Fairchild	9666	
		MC1412	
	Motorola	**MC1412**	**3064**
		ULN2002	
	NEC	μPA2002	
	Sanyo	LB1232	

(Continued)

Manufacturer Device	Replacement Source	Device	IC Master Page
PBD352304	SGS	L202	
	Signetics	NE5602	
	Sprague	ULN-2002	
		ULQ-2003	
	TI	ULN2002	
	Toshiba	TD62002	
PBD352312	Sprague	ULN-2024	
	TI	SN75469	
PBD352313	Sprague	ULN-2023	
	TI	SN75468	
PBD352314	SiliconG	SG2002	
	Sprague	ULN-2022	
		ULS-2002	
	TI	SN75467	
PBD353801	Sprague	ULN-2801	
PBD353802	Sprague	ULN-2804	
PBD353803	Sprague	ULN-2803	
PBD353804	Sprague	ULN-2802	

Rockwell Semiconductor Products

Manufacturer Device	Replacement Source	Device	IC Master Page
2708	AMD	AM2708	
	Hitachi	HN462708	
	Motorola	MC27A08	
		MCM2708	
	National	MM2708	
	Panasonic	MN2708	
	TI	TMS2708	
5213	Hitachi	HN48016	
	Intel	2816	
	National	NMC2816	
	NCR	NCR2161	
	Rockwell	52B13	
	SEEQ	5213	
		52B13	
	Xicor	**X2816A**	**547,4267,4268**
52B13	Hitachi	HN48016	
	Intel	2816	
	National	NMC2816	
	NCR	NCR2161	
	Rockwell	5213	
	SEEQ	5213	
		52B13	
	Xicor	**X2816A**	**547,4267,4268**
52B23	SEEQ	52B23	
CRC8030	Nitron	NC2030	
R2316	AMD	AM9218	
	Fairchild	3516	
		68316	
		F3516	
		F35316	
		F68316	**1464**
	GI	R03-9316	
	GTEMicro	2316	
	Intel	2316	
	Mostek	MK34000	
	Motorola	MCM68316	
		MCM68A316	
		MM2316	
	National	MM52116	
		MM5258	
	NCR	2316	
		NCR2316	
	NEC	μPD2316	
	OKI	**MSM2916**	**4118**
	SGS	M2316	
	TI	SBP8316	
	Toshiba	TMM331A	
		TMM334	
R2332	AMD	AM9232	
	AMI	S68322	
		S68A332	
	Fairchild	F3532	
	GI	R094132	
		T094132	
	GTEMicro	2332	
	Hitachi	HN46332	
	Intersil	IM7332	
	Motorola	MC68332	
		MCM68332	
		MCM68A332	**4048**
	National	MM52132	
	NCR	2332	
		NCR2332	
	NEC	**μPD2332**	**4100**
	OKI	**MSM2932**	**4118**
	RCA	**CDM5333**	**1593**
	SiliconG	SG3532	
	SSS	SCM23C32	

(Continued)

Manufacturer Device	Replacement Source	Device	IC Master Page
R2332	SMC	ROM4732	
	Synertek	**SY2332**	**4211**
	TI	**TMS4732**	**4226**
	Toshiba	TM2332	
		TMM333	
	Universal	UM2332	
	VTI	**VT2332**	**4249**
R2364	NCR	2365	
	NEC	μPD2364	
	Signetics	2364	
	Synertek	**SY2365**	**4211**
	VTI	**VT2365**	**4251**
R6500/1	Synertek	SY6500/1	
R6502	**Synertek**	**SY6502**	**1696**
R6503	**Synertek**	**SY6503**	**1696**
R6504	**Synertek**	**SY6504**	**1696**
R6505	**Synertek**	**SY6505**	**1696**
R6506	**Synertek**	**SY6506**	**1696**
R6507	**Synertek**	**SY6507**	**1696**
R6512	**Synertek**	**SY6512**	**1696**
R6514	**Synertek**	**SY6514**	**1696**
R6515	**Synertek**	**SY6515**	**1696**
R6520	**Synertek**	**SY6520**	**1696**
R6522	**Synertek**	**SY6522**	**1696**
R6530	Synertek	SY6530	
R6532	**Synertek**	**SY6532**	**1696**
R6545	Hitachi	HD6845	
	Motorola	**MC6845**	**1505**
R6551	**AMI**	**S6551**	**1449**
	Synertek	**SY6551**	**1696**
R68000	Hitachi	HD68000	
	Mostek	MK68000	
	Motorola	MC68000	
	Signetics	**SCN68000**	**1689,1690**
	Thomson-CSF		
		EF68000	
R8118	Mostek	MK4118A	
		MK4801A	

S MOS Systems

Manufacturer Device	Replacement Source	Device	IC Master Page
SMM2016	AD	AD515	
	Burr-Brown	3528	
	Harris	HM6116	
	IDT	IDT6116	
	MicroPwr	MP6116	
	Mitsubishi	M5K8725	
	OKI	**MSM2128**	**4118**
	Toshiba	TC5516	
SMM2326	AMD	AM92256	
	Fujitsu	MB83256	
	GI	R09256	
	Hitachi	HN613256	
	MicroPwr	MP2326	
	Mostek	MK38000	
	Motorola	MCM63256	
	NCR	23256	
	NEC	μPD2/83256	
		μPD23/83256	
	Signetics	23256	
	Synertek	SY23256	
	Toshiba	TMM23256	
SMM2364	AMI	S68364	
	GI	R09464	
	GTEMicro	G5364	
	Intersil	IM7364	
	MicroPwr	MP2364	
	Mitsubishi	M5L2364	
	Mostek	MK36000	
	Motorola	**MCM68364**	**4048,4054**
	National	MM5235	
	NCR	NCR2364	
	RCA	**CDM5364**	**1593**
	SGS	M36000	
	Signetics	2664A	
	SSS	SCM23C64	
		SCM23C65	
	SMC	ROM36000	
	Synertek	**SY2364**	**4211**
	TI	**TMS4764**	**4225**
	Toshiba	TM2364	
	VTI	**VT2364**	**4250**
SMM2365	Intel	2364A	
	MicroPwr	MP2365	
	Toshiba	TC5364	
SRM2016	Fujitsu	MB8416	
	Harris	HM65162	
	Hitachi	HM6116	
	IDT	IDT6116	
	MicroPwr	MP6116	

(Continued)

♦ Discontinued

Bold face device numbers indicate manufacturers data is provided in the IC Master on the pages noted.

© IC MASTER 1984

S MOS Systems (Cont'd)

Manufacturer Device	Replacement Source	Device	IC Master Page
SRM2016	Mostek	MK6116	
	Motorola	MCM6116	
	NEC	**μPD446**	**4090**
	RCA	CDM6116	
	Toshiba	TC5517A	
		TC5517B	
SRM2017	Fujitsu	MB8417	
	Harris	HM65172	
	MicroPwr	MP6118	
	RCA	CDM6117	
	Toshiba	TC5516A	
SRM2018	Fujitsu	MB8418	
	Hitachi	HM6117	
	MicroPwr	MP6117	
	NEC	**μPD449**	**4093**
	RCA	CDM6118	
	Toshiba	TC5518B	
SRM2114	AMD	AM9114	
	EMM-SESCO	2114	
	Fairchild	F2114	
	Hitachi	HM472114	
	Intel	2114	
		2114A	
	Intersil	IM2114	
	MicroPwr	MP2114	
	Motorola	MCM2114	
	National	MM2114	
	NEC	μPD2114	
	OKI	**MSM2114**	**4118**
	Panasonic	MN2114	
	SSS	SCM21C14	
	Synertek	**SY2114**	**4210**
	TI	TMS4045	
	Toshiba	TMM314	
		TMM314A	
SRM6504	Fujitsu	MB8404	
	Harris	HM6504	
	Intersil	IM6504	
	MicroPwr	MP6504	
	National	NMC6504	
	RCA	CDM5104	
	Toshiba	TC5504	
SRM6514	Fujitsu	MB8414	
	Harris	HM6514	
	Hitachi	HM4334	
	Intersil	IM6514	
	MicroPwr	MP6514	
	Mitsubishi	M58981	
	National	NMC6514	
	NEC	μPD6514	
	OKI	**MSM5115**	**4118**
	RCA	MWS5514	
	Toshiba	TC5514	

Sanyo Semiconductor

Manufacturer Device	Replacement Source	Device	IC Master Page
L78M05	Fairchild	μA78M05	
	Motorola	MC78M05	
	National	LM341-5	
		LM342-05	
		LM78M05	
	NEC	μPC78M05	
	TI	μA78M05	
L78M06	Fairchild	μA78M06	
	Motorola	MC78M06	
	TI	μA78M06	
L78M08	Fairchild	μA78M08	
	Motorola	MC78M08	
	NEC	μPC78M08	
	TI	μA78M08	
L78M12	NEA	μPC78M12	
	Fairchild	μA78M12	
	Motorola	MC78M12	
	National	LM341-12	
		LM342-12	
		LM78M12	
	NEC	μPC78M12	
L78M15	Fairchild	μA78M15	
	Motorola	MC78M15	
	National	LM341-15	
		LM342-15	
		LM78M15	
	NEC	μPC78M15	
L78M18	Motorola	MC78M18	
L78M24	Fairchild	μA78M24	
	Motorola	MC78M24	
	TI	μA78M24	
LA1230	Hitachi	HA1137	
		HA1230	
	National	CA3089	
		(Continued)	

Manufacturer Device	Replacement Source	Device	IC Master Page
LA1230	National	LM3089	
	RCA	CA3089	
	Sanyo	LA3089	
	SGS	TCA3089	
		TDA1200	
	Signetics	CA3089	
	Telefunken	U417	
	TI	SN76689	
LA1240	Hitachi	HA1197	
LA1352	Motorola	MC1357	
	RCA	CA1352	
LA1365	Motorola	M5140	
		MC1358	
	National	LM3064	
	RCA	CA3064	
		CA3065	
	TI	SN76666	
LA1369	Sprague	ULN-2224	
LA3045	Fairchild	μA3045	
	Hitachi	HA1127	
	National	LM3045	
	Plessey	SL3045	
		SL3145	
	RCA	**CA3045**	**3601**
	SiliconG	SG3045	
		SG3821	
	Sprague	ULS-2045	
LA3046	Fairchild	μA3046	
	Motorola	MC3346	
	National	LM3046	
	Plessey	SL3046	
		SL3146	
	RCA	**CA3046**	**3601**
		CA3146	**3601**
	SiliconG	SG3046	
		SG3146	
		SG3821	
	Sprague	ULN-2046	
LA3086	Fairchild	μA3086	
	Motorola	MC3386	
	National	LM3086	
	Plessey	SL3086	
	RCA	**CA3086**	**3601**
	SiliconG	SG3086	
		SG3886	
	Sprague	ULN-2086	
LA3089	Hitachi	HA1137	
		HA1230	
	National	CA3089	
		LM3089	
	RCA	CA3089	
	Sanyo	LA1230	
	SGS	TCA3089	
		TDA1200	
	Signetics	CA3089	
	Telefunken	U417	
	TI	SN76689	
LA3301	Exar	XR1310	
	Hitachi	HA1156	
	National	LM1310	
	RCA	CA1310	
	Sanyo	LA3350	
	Sprague	ULN-3810	
	TI	SN76115	
	Toshiba	TA7157	
LA3350	Exar	XR1310	
	Hitachi	HA1156	
	National	LM1310	
	RCA	CA1310	
	Sanyo	LA3301	
	Sprague	ULN-3810	
	TI	SN76115	
	Toshiba	TA7157	
LA6324	AMD	LM324	
	Exar	**XR3403**	**3378**
		XR3403C	
	Fairchild	μA324	
		μA3403	
	Motorola	LM324	
		MC3403	
	National	LM324	
	NEC	μPC324	
	Raytheon	LM324	
		RC3403	
		RC4137	
	RCA	CA324	
		LM324	
	Signetics	LM324	
		MC3403	
	SiliconG	SG324	
	TI	LM324	
		(Continued)	

Manufacturer Device	Replacement Source	Device	IC Master Page
LA6324	TI	MC3403	
	Thomson-CSF		
		TDB0124	
LA6358	Motorola	LM358	
	National	LM358A	
	NEC	μPC358	
	RCA	CA358A	
		LM358	
	Signetics	LM358	
		NE532	
	TI	LM358	
LA6393	Fairchild	μA393	
	Motorola	LM393	
	National	LM393	
	Signetics	LM393	
	TI	LM393	
LA6458A	AMD	AM1458	
	Exar	XR1458	
		XR4558	
	Fairchild	μA1458	
	Harris	HA-2655	
	Hitachi	HA17458	
	MicroPwr	MPOP14	
	Motorola	MC1458	
		MC4558C	
		RC4558	
	National	LM1458	
	NEC	μPC1458	
		μPC4558	
	PMI	PM1458	
	Raytheon	RC1458	
		RC4558	**3592**
	RCA	CA1458	
		LM1458	
		RC4558	
		SSS1458	
	Signetics	MC1458	
		NE4558	
	SiliconG	SG1458	
	TI	MC1458	
		RC4558	
LB1231	Exar	XR2001	
		XR2201	
	Fairchild	9665	
	Motorola	**MC1411**	**3064**
		ULN2001	
		XR2201	
	NEC	μPA2001	
	RIFA	PBD352301	
	SGS	L201	
	SiliconG	SG2001	
	Sprague	ULN-2001	
		ULN-2021	
		ULQ-2002	
		ULS-2001	
	TI	ULN2001	
	Toshiba	TD62001	
LB1232	Exar	XR2002	
		XR2202	
	Fairchild	9666	
		MC1412	
	Motorola	**MC1412**	**3064**
		ULN2002	
	NEC	μPA2002	
	RIFA	PBD352304	
	SGS	L202	
	Signetics	NE5602	
	Sprague	ULN-2002	
		ULQ-2003	
	TI	ULN2002	
	Toshiba	TD62002	
LB1233	Exar	XR2003	
		XR2004	
		XR2203	
	Fairchild	9667	
		MC1413	
	Mitsubishi	M54523	
	Motorola	**MC1413**	**3064**
		ULN2003	
	SGS	L203	
	Signetics	NE5603	
		ULN2003	
	SiliconG	SG2003	
	Sprague	ULN-2003	
		ULQ-2003	
		ULQ-2004	
		ULS-2003	
		ULS-2004	
	TI	ULN2003	
	Toshiba	TD62003	
LB1234	Exar	XR2204	
	Fairchild	9668	
		(Continued)	

Manufacturer Device	Replacement Source	Device	IC Master Page
LB1234	Mitsubishi	M54526	
	Motorola	**MC1416**	**3064**
		ULN2004	
	SGS	L204	
	Signetics	NE5604	
		ULN2004	
	SiliconG	SG2004	
	Sprague	ULN-2004	
		ULS2004	
	TI	ULN2004	
	Toshiba	TD62004	
LB1290	**Exar**	**XR6118**	**3376**
	SiliconG	SG6118	
	Sprague	UDN-6118	
LB1293	Sprague	UDN-6126	
LB8555	Cherry	CS555	
	Exar	XR555	
	Fairchild	μA555	
	Hitachi	HA17555	
	Motorola	MC1455	
	National	LM555	
	NEC	μPC1555	
	Raytheon	RC555	
	RCA	CA355	
		CA555	**3604**
	Signetics	NE555	
	SiliconG	SG555	
	TI	NE555	
LC4001B	Fairchild	F4001	
	Hitachi	HD14001	
	Motorola	MC14001	
	National	CD4001	
		MM74C02	
	OKI	MSM4001	
	RCA	CD4001	
	SGS	HCF4001	
	Signetics	HEF4001	
	SSS	SCL4001	
	Solitron	CM4001	
	Toshiba	TC4001	
LC4011	Fairchild	F4011	
	Hitachi	HD14011	
	Motorola	MC14011	
	National	CD4011	
		MM74C00	
	OKI	MSM4011	
	RCA	CD4011	
	SGS	HCF4011	
	Signetics	HEF4011	
	SSS	SCL4011	
	Solitron	CM4011	
	Toshiba	TC4011	
LC4013	Fairchild	F4013	
	Hitachi	HD14013	
	Motorola	MC14013	
	National	CD4013	
		MM74C74	
	OKI	MSM4013	
	RCA	CD4013	
	SGS	HCF4013	
	Signetics	HEF4013	
	SSS	SCL4013	
	Solitron	CM4013	
	Toshiba	TC4013	
LC4015	Fairchild	F4015	
	Hitachi	HD14015	
	Motorola	MC14015	
	National	CD4015	
		MM74C164	
	OKI	MSM4015	
	RCA	CD4015	
	SGS	HCF4015	
	Signetics	HEF4015	
	SSS	SCL4015	
	Solitron	CM4015	
	Toshiba	TC4015	
LC4016	Fairchild	F4016	
		F4066	
	Hitachi	HD14016	
		HD14066	
	Motorola	MC14016	
		MC14066	
	National	CD4016	
		CD4066	
	RCA	CD4016	
		CD4066	
	Sanyo	LC4066	
	SGS	HCF4016	
		HCF4066	
	Signetics	**HEF4016**	**864**
		HEF4066	
	SSS	SCL4016	
		(Continued)	

◆ Discontinued

The manufacturers report their devices can be used as direct replacements.
Performance details often differ, so compare the specifications considering your requirements.

Sanyo Semiconductor (Cont'd)

Manufacturer Device	Replacement Source	Device	IC Master Page
LC4016	SSS	SCL4066	
	Solitron	CM4016	
		CM4066	
		HCF4016	
	Toshiba	TC4016	
		TC4066	
LC4019	Fairchild	F4019	
	National	CD4019	
	OKI	MSM4019	
	RCA	CD4019	
	SGS	HCF4019	
	Signetics	HEF4019	
	SSS	SCL4019	
	Solitron	CM4019	
	Toshiba	TC4019	
LC4027	Fairchild	F4027	
	Hitachi	HD14027	
	Motorola	MC14027	
	National	CD4027	
		MM74C76	
	OKI	MSM4027	
	RCA	CD4027	
	SGS	HCF4027	
	Signetics	HEF4027	
	SSS	SCL4027	
	Solitron	CM4027	
LC4028	Fairchild	F4028	
	Hitachi	HD14028	
	Motorola	MC14028	
	National	CD4028	
		MM74C42	
	OKI	MSM4028	
	SGS	HCF4028	
	Signetics	HEF4028	
	SSS	SCL4028	
	Solitron	CM4028	
	Toshiba	TC4028	
LC4049	Fairchild	F4049	
	Hitachi	HD14049	
	Motorola	MC14049	
	National	CD4049	
	OKI	MSM4049	
	RCA	CD4049	
	SGS	HCF4049	
	Signetics	HEF4049	
	SSS	SCL4049	
	Solitron	CM4049	
	Toshiba	TC4049	
LC4066	Fairchild	F4016	
		F4066	
	Hitachi	HD14016	
		HD14066	
	Motorola	MC14016	
		MC14066	
	National	CD4016	
		CD4066	
	RCA	CD4016	
		CD4066	
	Sanyo	LC4016	
	SGS	HCF4016	
		HCF4066	
	Signetics	**HEF4016**	**864**
		HEF4066	
	SSS	SCL4016	
		SCL4066	
	Solitron	CM4016	
		CM4066	
		HCF4016	
	Toshiba	TC4016	
		TC4066	
LC4069	Fairchild	F4069	
	Hitachi	HD14069	
	Motorola	MC14069	
	National	CD4069	
		MM54C04	
		MM74C04	
	OKI	MSM4069	
	RCA	CD4069	
	SGS	HCF4069	
	Signetics	HEF4069	
	SSS	SCL4069	
		SCL4449	
	Solitron	CM4069	
	Toshiba	TC4069	
LC4071	Fairchild	F4071	
	Hitachi	HD14071	
	Motorola	MC14071	
	National	CD4071	
		MM74C32	

(Continued)

Manufacturer Device	Replacement Source	Device	IC Master Page
LC4071	OKI	MSM4071	
	RCA	CD4071	
	SGS	HCF4071	
	Signetics	HEF4071	
	SSS	SCL4071	
	Solitron	CM4071	
	Toshiba	TC4071	
LC4081	Fairchild	F4081	
	Hitachi	HD14081	
	Motorola	MC14081	
	National	CD4081	
		MM74C08	
	OKI	MSM4081	
	RCA	CD4081	
	SGS	HCF4081	
	Signetics	HEF4081	
	SSS	SCL4081	
	Solitron	CM4081	
	Toshiba	TC4081	
LC4093	Fairchild	F4093	
	Hitachi	HD14093	
	Motorola	MC14093	
	National	CD4093	
	OKI	MSM4093	
	RCA	CD4093	
	SGS	HCF4093	
	Signetics	HEF4093	
	SSS	SCL4093	
	Toshiba	TC4093	
LC4520	Fairchild	F4520	
	Hitachi	HD14520	
	Motorola	MC14520	
	National	CD4520	
	OKI	MSM4520	
	RCA	CD4520	
	SGS	HCF4520	
	Signetics	HEF4520	
	SSS	SCL4520	
	Solitron	CM4520	
	Toshiba	TC4520	

SBE, Inc.

Manufacturer Device	Replacement Source	Device	IC Master Page
1010	AMI	1010	
1020	AMI	1020	
1120	AMI	1120	
560	AMI	560	
590	AMI	590	

SEEQ Technology, Inc.

Manufacturer Device	Replacement Source	Device	IC Master Page
5133	AMD	AM2764	
	Fujitsu	MBM2764	
	Hitachi	HN482764	
	Intel	2764	
		M2764	
	Intersil	IM2764	
	Mitel	M5L2764	
	Mitsubishi	M5L2764	
	Mostek	MK2764	
	National	NMC2764	
	NEC	μPD2764	
	Toshiba	TMM2764	
5143	AMD	27128	
		AM27128	**3929**
	Fujitsu	MBM27128	
	Intel	27128	
	Mitsubishi	M5L27128	
		M5L27C128	
5213	Hitachi	HN48016	
	Intel	2816	
	National	NMC2816	
	NCR	NCR2161	
	Rockwell	5213	
		52B13	
	SEEQ	52B13	
	Xicor	**X2816A**	**547,4267,4268**
52B13	Hitachi	HN48016	
	Intel	2816	
	National	NMC2816	
	NCR	NCR2161	
	Rockwell	5213	
		52B13	
	SEEQ	5213	
	Xicor	**X2816A**	**547,4267,4268**
52B23	Rockwell	52B23	
52B33	IMS	IMS3630	
	Xicor	**X2864**	**4267,4269**

Semi Processes Inc.

Manufacturer Device	Replacement Source	Device	IC Master Page
SD5000	Siliconix	SI5000	
SD5001	Siliconix	SI5001	
SD5002	Siliconix	SI5002	
SD5200	Siliconix	SI5200	
SP54SC137	Mitel	MD54SC137	
SP54SC138	Mitel	MD54SC138	
SP54SC139	Mitel	MD54SC139	
SP54SC238	Mitel	MD54SC238	
SP54SC239	Mitel	MD54SC239	
SP54SC240	Mitel	MD54SC240	
SP54SC241	Mitel	MD54SC241	
SP54SC244	Mitel	MD54SC244	
SP54SC245	Mitel	MD54SC245	
SP54SC373	Mitel	MD54SC373	
SP54SC374	Mitel	MD54SC374	
SP54SC540	Mitel	MD54SC540	
SP54SC541	Mitel	MD54SC541	
SP54SC573	Mitel	MD54SC573	
SP54SC574	Mitel	MD54SC574	
SP7003	MasterLogic	ML7003	
SP7005	MasterLogic	ML7005	
SP7010	MasterLogic	ML7010	
SP7015	MasterLogic	ML7015	
SP7020	MasterLogic	ML7020	
SP74HC00	Motorola	MC74HC00	
	National	MM74HC00	
	RCA	CD74HC00	
	Signetics	PCF74HC00	
	Toshiba	TC40H000	
SP74HC02	Motorola	MC74HC02	
	National	MM74HC02	
	RCA	CD74HC02	
	Signetics	PCF74HC02	
	Toshiba	TC40H002	
SP74HC04	Motorola	MC74HC04	
	National	MM74HC04	
	RCA	CD74HC04	
	Toshiba	TC40H004	
SP74HC08	Motorola	MC74HC08	
	National	MM74HC08	
	RCA	CD74HC08	
	Signetics	PCF74HC08	
SP74HC10	Motorola	MC74HC10	
	National	MM74HC10	
	RCA	CD74HC10	
	Signetics	PCF74HC10	
	SiliconG	SG75474	
	Toshiba	TC40H010	
SP74HC107	Motorola	MC74HC107	
	National	MM74HC107	
	RCA	CD74HC107	
	Signetics	PCF74HC107	
	Toshiba	TC40H107	
SP74HC109	Motorola	MC74HC109	
	National	MM74HC109	
	RCA	CD74HC109	
	Signetics	PCF74HC109	
SP74HC11	Motorola	MC74HC11	
	National	MM74HC11	
	RCA	CD74HC11	
	Signetics	PCF74HC11	
	Toshiba	TC40H011	
SP74HC112N	Motorola	MC74HC112	
	National	MM74HC112	
	RCA	CD74HC112	
	Signetics	PCF74HC112	
SP74HC113	Motorola	MC74HC113	
SP74HC125	Motorola	MC74HC125	
SP74HC126	Motorola	MC74HC126	
SP74HC132	Motorola	MC74HC132	
	National	MM74HC132	
	RCA	CD74HC132	
	Signetics	PCF74HC132	
SP74HC133	Motorola	MC74HC133	
	National	MM74HC133	
	RCA	CD74HC133	
	Signetics	PCF74HC133	
SP74HC138	Motorola	MC74HC138	
	National	MM74HC138	
	RCA	CD74HC138	
	Signetics	PCF74HC138	
SP74HC139	Motorola	MC74HC139	
	National	MM74HC139	
	RCA	CD74HC139	
	Signetics	PCF74HC139	
	Toshiba	TC40H139	
SP74HC14	Motorola	MC74HC14	
	National	MM74HC14	
	RCA	CD74HC14	
	Signetics	PCF74HC14	
SP74HC147	Motorola	MC74HC147	
	National	MM74HC147	
	RCA	CD74HC147	
	Signetics	PCF74HC147	
SP74HC151	Motorola	MC74HC151	
	National	MM74HC151	
	RCA	CD74HC151	
	Signetics	PCF74HC151	
SP74HC153	Motorola	MC74HC153	
	National	MM74HC153	
	RCA	CD74HC153	
	Signetics	PCF74HC153	
	Toshiba	TC40H153	
SP74HC157	Motorola	MC74HC157	
	National	MM74HC157	
	RCA	CD74HC157	
	Signetics	PCF74HC157	
	Toshiba	TC40H157	
SP74HC158	Motorola	MC74HC158	
	National	MM74HC158	
	RCA	CD74HC158	
	Signetics	PCF74HC158	
	Toshiba	TC40H158	
SP74HC160	Motorola	MC74HC160	
	National	MM74HC160	
	RCA	CD74HC160	
	Signetics	PCF74HC160	
SP74HC161	Motorola	MC74HC161	
	National	MM74HC161	
	RCA	CD74HC161	
	Signetics	PCF74HC161	
SP74HC162	Motorola	MC74HC162	
	National	MM74HC162	
	RCA	CD74HC162	
	Signetics	PCF74HC162	
SP74HC163	Motorola	MC74HC163	
	National	MM74HC163	
	RCA	CD74HC163	
	Signetics	PCF74HC163	
SP74HC164	Motorola	MC74HC164	
	National	MM74HC164	
	RCA	CD74HC164	
	Signetics	PCF74HC164	
SP74HC165	Motorola	MC74HC165	
	National	MM74HC165	
	RCA	CD74HC165	
	Signetics	PCF74HC165	
SP74HC173	Motorola	MC74HC173	
	National	MM74HC173	
	RCA	CD74HC173	
	Signetics	PCF74HC173	
SP74HC174	Motorola	MC74HC174	
	National	MM74HC174	
	RCA	CD74HC174	
	Signetics	PCF74HC174	
	Toshiba	TC40H174	
SP74HC175	Motorola	MC74HC175	
	National	MM74HC175	
	RCA	CD74HC175	
	Signetics	PCF74HC175	
	Toshiba	TC40H175	
SP74HC182	Motorola	MC74HC182	
SP74HC192	Motorola	MC74HC192	
	National	MM74HC192	
	RCA	CD74HC192	
	Signetics	PCF74HC192	
	Toshiba	TC40H192	
SP74HC193	Motorola	MC74HC193	
	National	MM74HC193	
	RCA	CD74HC193	
	Signetics	PCF74HC193	
	Toshiba	TC40H193	
SP74HC194	Motorola	MC74HC194	
	National	MM74HC194	
	RCA	CD74HC194	
	Signetics	PCF74HC194	
SP74HC195	Motorola	MC74HC195	
	National	MM74HC195	
	RCA	CD74HC195	
	Signetics	PCF74HC195	
SP74HC20	Motorola	MC74HC20	
	National	MM74HC20	
	RCA	CD74HC20	
	Signetics	PCF74HC20	
	Toshiba	TC40H020	
SP74HC238	RCA	CD74HC238	
	Signetics	PCF74HC238	
SP74HC240	Motorola	MC74HC240	
	National	MM74HC240	
	RCA	CD74HC240	
	Signetics	PCF74HC240	
	Toshiba	TC40H240	

◆ Discontinued

Bold face device numbers indicate manufacturers data is provided in the IC Master on the pages noted.

© IC MASTER 1984

Semi Processes Inc. (Cont'd)

Manufacturer Device	Replacement Source	Device	IC Master Page
SP74HC241	Motorola	MC74HC241	
	National	MM74HC241	
	RCA	CD74HC241	
	Signetics	PCF74HC241	
SP74HC242	Motorola	MC74HC242	
	National	MM74HC242	
	RCA	CD74HC242	
	SGN		
	Signetics	PCF74HC242	
SP74HC251	Motorola	MC74HC251	
	National	MM74HC251	
	RCA	CD74HC251	
	Signetics	PCF74HC251	
SP74HC253	Motorola	MC74HC253	
	National	MM74HC253	
	RCA	CD74HC253	
	Signetics	PCF74HC253	
SP74HC257	Motorola	MC74HC257	
	National	MM74HC257	
	RCA	CD74HC257	
	Signetics	PCF74HC257	
SP74HC266	Motorola	MC74HC266	
	National	MM74HC266	
	RCA	CD74HC266	
	Signetics	PCF74HC266	
SP74HC27	Motorola	MC74HC27	
	National	MM74HC27	
	RCA	CD74HC27	
	Signetics	PCF74HC27	
	Toshiba	TC40H027	
SP74HC273	Motorola	MC74HC273	
	RCA	CD74HC273	
	Signetics	PCF74HC273	
SP74HC280	Motorola	MC74HC280	
	National	MM74HC280	
	RCA	CD74HC280	
	Signetics	PCF74HC280	
SP74HC298	Motorola	MC74HC298	
SP74HC30	Motorola	MC74HC30	
	National	MM74HC30	
	RCA	CD74HC30	
	Signetics	PCF74HC30	
SP74HC32	Motorola	MC74HC32	
	National	MM74HC32	
	RCA	CD74HC32	
	Signetics	PCF74HC32	
	Toshiba	TC40H032	
SP74HC365	Motorola	MC74HC365	
	National	MM74HC365	
	RCA	CD74HC365	
SP74HC367	Motorola	MC74HC367	
	National	MM74HC367	
	RCA	CD74HC367	
	Signetics	PCF74HC367	
SP74HC373	Motorola	MC74HC373	
	National	MM74HC373	
	RCA	CD74HC373	
	Signetics	PCF74HC373	
SP74HC374	Motorola	MC74HC374	
	National	MM74HC374	
	RCA	CD74HC374	
	Signetics	PCF74HC374	
SP74HC393	Motorola	MC74HC393	
	National	MM74HC393	
	RCA	**CD74HC393**	**843**
	Signetics	PCF74HC393	
SP74HC4002	Motorola	MC74HC4002	
	National	MM74HC4002	
	RCA	**CD74HC4002**	**843**
	Signetics	PCF74HC4002	
SP74HC4017	Motorola	MC74HC4017	
	National	MM74HC4017	
	RCA	**CD74HC4017**	**843**
	Signetics	PCF74HC4017	
SP74HC4020	Motorola	MC74HC4020	
	National	MM74HC4020	
	RCA	**CD74HC4020**	**843**
	Signetics	PCF74HC4020	
SP74HC42	Motorola	MC74HC42	
	National	MM74HC42	
	RCA	CD74HC42	
	Signetics	PCF74HC42	
SP74HC533	Motorola	MC74HC533	
	National	MM74HC533	
	RCA	**CD74HC533**	**843**
	Signetics	PCF74HC533	
SP74HC534	Motorola	MC74HC534	
	National	MM74HC534	
	RCA	**CD74HC534**	**843**
	Signetics	PCF74HC534	
SP74HC540	Motorola	MC74HC540	
SP74HC541	Motorola	MC74HC541	
SP74HC573	Motorola	MC74HC573	
	National	MM74HC573	
	RCA	**CD74HC573**	**843**
	Signetics	PCF74HC573	
SP74HC574	Motorola	MC74HC574	
	National	MM74HC574	
	RCA	**CD74HC574**	**843**
	Signetics	PCF74HC574	
SP74HC73	Motorola	MC74HC73	
	National	MM74HC73	
	RCA	CD74HC73	
	Signetics	PCF74HC73	
SP74HC74	Motorola	MC74HC74	
	National	MM74HC74	
	RCA	CD74HC74	
	Signetics	PCF74HC74	
	Toshiba	TC40H074	
SP74HC75	Motorola	MC74HC75	
	National	MM74HC75	
	RCA	CD74HC75	
	Signetics	PCF74HC75	
SP74HC76	Motorola	MC74HC76	
	National	MM74HC76	
	RCA	CD74HC76	
	Signetics	PCF74HC76	
	Toshiba	TC40H076	
SP74HC85	Motorola	MC74HC85	
	National	MM74HC85	
	RCA	CD74HC85	
	Signetics	PCF74HC85	
SP74HC86N	Motorola	MC74HC86	
	National	MM74HC86	
	RCA	CD74HC86	
	Signetics	PCF74HC86	
SP74HCT138	Motorola	MC74HCT138	
	RCA	**CD74HCT138**	**842**
	Zytrex	ZX74HCT138-2	
SP74HCT139	**RCA**	**CD74HCT139**	**842**
	Signetics	PCF74HCT139	
	Zytrex	ZX74HCT139-2	
SP74HCT240	Motorola	MC74HCT240	
	RCA	**CD74HCT240**	**842**
	Signetics	PCF74HCT240	
	Zytrex	ZX74HCT240-2	
SP74HCT241	Motorola	MC74HCT241	
	RCA	**CD74HCT241**	**842**
	Signetics	PCF74HCT241	
	Zytrex	ZX74HCT241-2	
SP74HCT244	Motorola	MC74HCT244	
	RCA	**CD74HCT244**	**842**
	Signetics	PCF74HCT244	
	Zytrex	ZX74HCT244-2	
SP74HCT373	Motorola	MC74HCT373	
	RCA	**CD74HCT373**	**842**
	Zytrex	ZX74HCT373-2	
SP74HCT374	Motorola	MC74HCT374	
	RCA	**CD74HCT374**	**842**
	Zytrex	ZX74HCT374-2	
SP74HCT540	Motorola	MC74HCT540	
	RCA	CD74HCT540	
	Zytrex	ZX74HCT540-2	
SP74HCT541	Motorola	MC74HCT542	
	RCA	CD74HCT541	
	Zytrex	ZX74HCT542-2	
SP74HCT573	RCA	CD74HCT53	
	Zytrex	ZX74HCT573-2	
SP74HCT574	Zytrex	ZX74HCT574-2	
SP74SC137	GTEMicro	G74SC137	
	Mitel	MD74SC137	
	Plessey	MV74SC137	
SP74SC138	GTEMicro	G74SC138	
	Mitel	MD74SC138	
	Plessey	MV74SC138	
	RCA	CDP1873	
SP74SC139	GTEMicro	G74SC139	
	Mitel	MD74SC139	
	Plessey	MV74SC139	
SP74SC238	Mitel	MD74SC238	
SP74SC239	Mitel	MD74SC239	
SP74SC240	GTEMicro	G74SC240	
	Mitel	MD74SC240	
	Plessey	MV74SC240	
SP74SC241	GTEMicro	G74SC241	
	Mitel	MD74SC241	
	Plessey	MV74SC241	
SP74SC244	GTEMicro	G74SC244	
	Mitel	MD74SC244	
	Plessey	MV74SC244	
SP74SC245	Fairchild	74LS245	
	GTEMicro	G74SC245	
		(Continued)	
SP74SC245	Mitel	MD74SC245	
	MMI	**SN74LS245**	**804**
	Motorola	SN74LS245	
	National	DM74LS245	
	Plessey	MV74SC245	
	Signetics	74LS245	
		N8T245	**876**
	TI	SN74LS245	
SP74SC373	GTEMicro	G74SC373	
	Mitel	MD74SC373	
	Plessey	MV74SC373	
SP74SC374	GTEMicro	G74SC374	
	Mitel	MD74SC374	
	Plessey	MV74SC374	
SP74SC540	GTEMicro	G74SC540	
	Mitel	MD74SC540	
SP74SC541	GTEMicro	G74SC541	
	Mitel	MD74SC541	
SP74SC573	GTEMicro	G74SC573	
	Mitel	MD74SC573	
SP74SC574	GTEMicro	G74SC574	
	Mitel	MD74SC574	
SP810H8	**MMI**	**HAL10H8C**	
		4776,4782	
	Si-Fab	**HCT10H8**	**4827**
	Zytrex	ZX-CAL10H8	
SP810L8	**MMI**	**HAL10L8C**	
		4776,4782	
	Si-Fab	**HCT10L8**	**4827**
	Zytrex	ZX-CAL10L8	
SP812H6	**MMI**	**HAL12H6C**	
		4776,4782	
	Si-Fab	HCT12H6	
	Zytrex	ZX-CAL12H6C	
SP812L6	**MMI**	**HAL12L6C**	
		4776,4782	
	Si-Fab	HCT12L6	
	Zytrex	ZX-CAL12L6	
SP814H4	**MMI**	**HAL14H4C**	
		4776,4782	
	Si-Fab	**HCT14H4**	**4827**
	Zytrex	ZX-CAL-14H4	
SP814L4	**MMI**	**HAL14L4C**	
		4776,4782	
	Si-Fab	**HCT14L4**	**4827**
	Zytrex	ZX-CAL14L4	
SP816C1	MMI	HAL16C1	
	Si-Fab	**HCT16C1**	**4827**
SP816H2	MMI	HAL-16H2C	
	Si-Fab	**HCT16H2**	**4827**
SP816L2	**MMI**	**HAL16L2C**	
		4776,4782	
	Si-Fab	**HCT16L2**	**4827**
SP816L8	MMI	C-HAL16L8C	
		HAL16L8C	
		4776,4784	
	Si-Fab	**HCT16L8**	**4827**
	Zytrex	ZX-CAL16L8	
SP816R4	MMI	C-HAL16R4C	
		HAL16R4C	
		4776,4784	
	Si-Fab	**HCT16R4**	**4827**
	Zytrex	ZX-CAL16R4	
SP816R6	MMI	C-HAL16R6C	
		HAL16R6C	
		4776,4784	
	Si-Fab	**HCT16R6**	**4827**
	Zytrex	ZX-CAL16R6	
SP816R8	ZX-CAL16R8		
	MMI	C-HAL16R8C	
		HAL16R8C	
		4776,4784	

SGS-ATES Semiconductor

Manufacturer Device	Replacement Source	Device	IC Master Page
HCF4000	Motorola	MC14000	
	National	CD4000	
	RCA	CD4000	
	Signetics	HEF400	
	SSS	SCL4000	
	Solitron	CM4000	
HCF4001	Fairchild	F4001	
	Hitachi	HD14001	
	Motorola	MC14001	
	National	CD4001	
		MM74C02	
	OKI	MSM4001	
	RCA	CD4001	
	Sanyo	LC4001B	
	Signetics	HEF4001	
	SSS	SCL4001	
	Solitron	CM4001	
	Toshiba	TC4001	
HCF4002	Fairchild	F4002	
	Hitachi	HD14002	
	Motorola	MC14002	
	National	CD4002	
	RCA	CD4002	
	Signetics	HEF4002	
	SSS	SCL4002	
	Solitron	CM4002	
	Toshiba	TC4002	
HCF4006	Fairchild	F4006	
	Hitachi	HD14006	
	National	CD4006	
	Signetics	HEF4006	
	SSS	SCL4006	
	Solitron	CM4006	
	Toshiba	TC4006	
HCF4007	Fairchild	F4007	
	Hitachi	HD14007	
	Motorola	MC14007	
	National	CD4007	
	RCA	CD4007	
	Signetics	HEF4007	
	SSS	SCL4007	
	Solitron	CM4007	
	Toshiba	TC4007	
HCF4008	Fairchild	F4008	
	Hitachi	HD14008	
	Motorola	MC14008	
	National	CD4008	
		MM74C83	
	RCA	CD4008	
	Signetics	HEF4008	
	SSS	SCL4008	
	Solitron	CM4008	
	Toshiba	TC4008	
HCF4009	Hitachi	HD14009	
	National	CD4009	
	RCA	CD4049	
	SSS	SCL4009	
	Solitron	CM4009	
	Toshiba	TC4009	
HCF4010	Hitachi	HD14010	
	National	CD4010	
	RCA	**CD4010**	
	SSS	SCL4010	
	Solitron	CM4010	
	Toshiba	TC4010	
HCF40100	RCA	CD40100	
HCF40101	Fairchild	F4531	
	Hitachi	HD14531	
	Motorola	MC14531	
	RCA	CD40101	
	Signetics	HEF4531	
	SSS	SCL4531	
	Toshiba	TC4531	
HCF40102	RCA	CD40102	
HCF40103	RCA	CD40103	
HCF40105	RCA	CD40105	
HCF40106	Fairchild	F40014	
	Hitachi	HD14584	
	Motorola	MC14584	
	National	CD40106	
		CD4584	
		MM54C14	
		MM74C14	
	RCA	CD40106	
	Signetics	**HEF40106**	**865**
	SSS	SCL4584	
HCF40107	RCA	CD40107	
	Toshiba	TC40107	
HCF40109	Fairchild	F4104	
	Mitel	MD4104	
	Motorola	MC14504	
	National	MM4104	
	RCA	CD40109	
	Signetics	HEF4104	
HCF4011	Fairchild	F4011	
	Hitachi	HD14011	
	Motorola	**MC14011**	
	National	CD4011	
		MM74C00	
	OKI	MSM4011	
	RCA	CD4011	
	Sanyo	LC4011	
	Signetics	HEF4011	
	SSS	SCL4011	
	Solitron	CM4011	
	Toshiba	TC4011	
HCF4012	Fairchild	F4012	
	Hitachi	HD14012	
	Motorola	MC14012	
	National	CD4012	
		(Continued)	

◆ Discontinued

The manufacturers report their devices can be used as direct replacements.
Performance details often differ, so compare the specifications considering your requirements.

IC MASTER BELONGS ON YOUR BOOKSHELF

If you use IC MASTER frequently, you can obtain your own copy by ordering now. Use the order cards contained in this publication, or order by telephone as described below.

IC MASTER is a two-volume set of technical data carefully organized to direct the engineer to the integrated circuits and related products that are closest to his specific needs. It is the surest way to find the optimum device to answer an engineering design requirement. By ordering now, you won't have to borrow or search for IC MASTER the next time you need it.

Typical Use of IC MASTER

Can an engineer find out who makes a 64K dynamic RAM with an access time of 120 nanoseconds or faster in less than 30 seconds?
He can if he turns to the Memory section of IC MASTER and looks for the 64K organization (words and bits per word) that he needs.
Because each device is listed in order of access time, he can easily determine the devices that satisfy his speed requirements.

In the United States only:

You can order IC MASTER simply by charging it to your VISA or Master Card credit card. To place your order, call now: (516) 222-2500.
Ask for Extension 314.

ORDER YOUR COPY NOW

ABBREVIATIONS OF COMPANY NAMES

Action Ins	Action Instruments
AD	Analog Devices
ADT	Advanced Digital Technology
Advent	Advent Products, Inc.
Alphatron	Alphatron
AMA	American Automation
AMD	Advanced Micro Devices
AMI	American Microsystems, Inc.
Amperex	Amperex Electronic Corp.
Analogic	Analogic
Analog Sys	Analog Systems
APC	Applied Micro Circuits
Apex	Apex Microtechnology
APM	Applied Microsystems Corp.
Appl Sys	Applied Systems Corp.
APT	Applied Microtechnology
Aptek	Aptek Microsystems
Array Tech	Array Technology
AWI	AWI Electronics
Barvon	Barvon Research
Bedford	Bedford Computer Systems Inc.
Burr-Brown	Burr-Brown
CAE	Computer Aided Engineering
Cal Devices	California Devices
Cermetek	Cermetek
CGRS	CGRS Microtech Inc.
Cherry	Cherry Semiconductor
CIC	Custom Integrated Circuits
CirTech	Circuit Technology
Citel	Citel
Comlinear	Comlinear Corporation
CMA	Custom MOS Arrays
Comark	Comark Corp.
Comdial	Comdial Semiconductor
Comp Auto	Computer Automation
Compas	Compas Microsystems
Cont Logic	Control Logic Inc.
Control Sys	Control Systems Microsystems Div.
CreMicro	Creative Micro Systems
Cromemco	Cromemco, Inc.
Cubit	Cubit Inc.
Curtis	Curtis Electro Devices, Inc.
Cybernetic	Cybernetic Micro Systems
Cybersys	Cybersystems
Cybertek	Cybertek Inc.
Data General	Data General
Data I/O	Data I/O
Data Trans	Data Translation
Datel	Datel
Datricon	Datricon Corporation
DDC	Data Devices Corporation
DEC	Digital Equipment Corporation
Die-Tech	Die-Tech
Digelec	Digelec Corp.
Digitek	Digitek, Inc.
Dionics	Dionics Inc.
Dist Comp	Distributed Computer Systems
Divers Tech	Diversified Technology
E-HI	E-H International, Inc.
EDI	Electronic Designs Inc.
Elind	Elind Elettronica Industriale
EMM-SESCO	EEM-SESCO
Emulogic	Emulogic Inc.
ETI Micro	ETI Micro
Exar	Exar Integrated Systems
Exel	Exel Microelectronics
Fairchild	Fairchild
Ferranti	Ferranti Electric
Force	Force Computers
Fujitsu A	Fujitsu America
Fujitsu	Fujitsu Microelectronics, Inc.
GI	General Instrument
GTE Micro	GTE Microcircuits
Harris	Harris Semiconductor
Heurikon	Heurikon Corp.
Hilevel	Hilevel Technology, Inc.
Hitachi	Hitachi America, Ltd.
Holt	Holt Inc.
HP	Hewlett-Packard
Hughes	Hughes Aircraft, Solid State Products
Hybrid Sys	Hybrid Systems
HyComp	HyComp
ICC	International Cybernetics
IDT	Integrated Device Technology
IMI	International Microcircuits, Inc.
IMP	International Microelectronic Products
IMS	Industrial MicroSystems Inc.
Infosphere	Infosphere
Inmos	Inmos
IntCirEng	Integrated Circuit Engineering
IntCirSys	Integrated Circuit Systems
IntCompSys	Integrated Computer Systems
Int Tech	Integrated Technology Corp.
Intech	Intech Microcircuits Div.
Intel	Intel
Interdesign	Interdesign
Intersil	Intersil
Intronics	Intronics
ITT	ITT Semiconductors
Kinetic Sys	Kinetic Systems
Kontron	Kontron Electronics
Lambda	Lambda Semiconductor
Linear Tech	Linear Technology
LSI Comp	LSI Computer Systems
LSI Logic	LSI Logic Corporation
Master Logic	Master Logic Corporation
Matrix	Matrix Corp.
Matrox	Matrox Electronic Systems
Maxim	Maxim Integrated Products
MCC	Micro-Computer Control
MCE	MCE Electronics
Micrel	Micrel
Micro Innov	Micro Innovators
Micropac	Micropac Industries
Micro Net	Micro Networks
Micro Pwr	Micro Power Systems
Micro Sci	Micro Sciences Corp.
Micro Tech	Microcircuits Technology
Micro-Link	Micro-Link Corporation
Micron	Micron Technology
MilerTron	MilerTronics
Miller	Miller Technology
Mitel	Mitel Semiconductor
Mitsubishi	Mitsubishi Electronics
MMI	Monolithic Memories, Inc.
Mostek	Monolithic Systems Corp.
Motorola	Mostek
MRC	Motorola Semiconductor
Murray	MRC Systems
Monosil	Murray Consulting
National	National Semiconductor
NCM	NCM Corp.
NCR	NCR Corp., Microelectronics Division
NEC	NEC Electronics
Nitron	Nitron
OAE	Oliver Advanced Engineering
Octagon	Octagon Systems Corp.
OEI	Optical Electronics Inc.
Ohio Sci	Ohio Scientic
OKI	OKI Semiconductor
Omnibyte	Omnibyte Corp.
Onset	Onset Computer Corp.
Panasonic	Panasonic
Pico Design	Pico Design
Polycore	Polycore Electronics
Plessey	Plessey Semiconductors
PMI	Precision Monilithics, Inc.
PragDes	Pragmatic Design Inc.
Pro-Log	Pro-Log Corp.
Quay	Quay Corp.
Raytheon	Raytheon Semiconductor
RCA	RCA Solid State Division
RCI Data	RCI Data
RELMS	Relational Memory Systems
Reticon	Reticon
RIFA	RIFA
Rockwell	Rockwell, Microelectronic Devices
RTC	Riehl Time Corporation
Sanyo	Sanyo
SBE	SBE, Inc.
SEEQ	SEEQ Technology, Inc.
SPI	Semi Processes Inc.
Siemens	Siemens
Si-Fab	Si-Fab
Signetics	Signetics
SGS	SGS Semiconductor
Sharp	Sharp
Silicon G	Silicon General
Siliconix	Siliconix
Silicon Sys	Silicon Systems Inc.
Siltronics	Siltronics
SMC	Standard Microsystems Corp.
S MOS	S MOS Systems
Solarise	Solarise Enterprises
Solitron	Solitron Devices
Sprague	Sprague Electric Company
SSM	Solid State Micro Technology for Music
SSS	Solid State Scientific
Stag	Stag Microsystems
STC	Storage Technology Corp.
STD	STD Microsystems
Struc Des	Structured Design Inc.
Stynetic	Stynetic Systems
Sunrise	Sunrise Electronics
Sunshine	Sunshine Semiconductor
Supertex	Supertex Inc.
Symtek	Symtek Corp.
Synertek	Synertek
Sys Innov	Systems Innovations
Tau Zero	Tau Zero Inc.
Technitrol	Technitrol
Tektronix	Tektronix
Teledyne C	Teledyne Crystalonics
Teledyne P	Teledyne Philbrick
Teledyne S	Teledyne Semiconductor
Telefunken	Telefunken
Telmos	Telmos
Teltone	Teltone Corporation
TI	Texas Instruments
Third Domain	Third Domain
Thomson-CSF	Thomson-CSF Components Corp.
Toshiba	Toshiba America
Trans-Data	Trans-Data
TRW	TRW LSI Products
Unitrode	Unitrode
Universal	Universal Semiconductor, Inc.
Varix	Varix Corp.
VLSI Design	VLSI Design Associates
VTI	VLSI Technology, Inc.
Votrax	Votrax
Weitek	Weitek Corporation
Western	Western Digital
Wintek	Wintek Corp.
Xicor	Xicor, Inc.
Xycom	Xycom
Zendex	Zendex Corp.
Zilog	Zilog
ZyMOS	ZyMOS Corporation
Zytrex	Zytrex Corp.

SGS-ATES Semiconductor (Cont'd)

Manufacturer Device	Replacement Source	Device	IC Master Page
HCF4012	RCA	CD4012	
	Signetics	HEF4012	
	SSS	SCL4012	
	Solitron	CM4012	
	Toshiba	TC4012	
HCF4013	Fairchild	F4013	
	Hitachi	HD14013	
	Motorola	MC14013	
	National	CD4013	
		MM74C74	
	OKI	MSM4013	
	RCA	CD4013	
	Sanyo	LC4013	
	Signetics	HEF4013	
	SSS	SCL4013	
	Solitron	CM4013	
	Toshiba	TC4013	
HCF4014	Fairchild	F4014	
	Hitachi	HD14014	
	Motorola	MC14014	
	National	CD4014	
	RCA	CD4014	
	Signetics	HEF4014	
	SSS	SCL4014	
	Solitron	CM4014	
	Toshiba	TC4014	
HCF4015	Fairchild	F4015	
	Hitachi	HD14015	
	Motorola	MC14015	
	National	CD4015	
		MM74C164	
	OKI	MSM4015	
	RCA	CD4015	
	Sanyo	LC4015	
	Signetics	HEF4015	
	SSS	SCL4015	
	Solitron	CM4015	
	Toshiba	TC4015	
HCF4016	Fairchild	F4016	
		F4066	
	Hitachi	HD14016	
		HD14066	
	Motorola	MC14016	
		MC14066	
	National	CD4016	
		CD4066	
	RCA	CD4016	
		CD4066	
	Sanyo	LC4016	
		LC4066	
	SGS	HCF4066	
	Signetics	**HEF4016**	**864**
		HEF4066	
	SSS	SCL4016	
		SCL4066	
	Solitron	CM4016	
		CM4066	
		HCF4016	
	Toshiba	TC4016	
		TC4066	
HCF40160	Fairchild	F40160	
	Hitachi	HD14160	
	Motorola	MC14160	
	National	CD40160	
		MM54C160	
		MM74C160	
	RCA	CD40160	
	SSS	SCL4160	
	Toshiba	TC40160	
HCF40161	Fairchild	F40161	
	Hitachi	HD14161	
	Motorola	MC14161	
	National	CD40161	
		MM54C161	
		MM74C161	
	RCA	CD40161	
	Signetics	HEF40161	
	SSS	SCL4161	
	Toshiba	TC40161	
HCF40162	Fairchild	F40162	
	Hitachi	HD14162	
	Motorola	MC14162	
	National	CD40162	
		MM54C162	
		MM74C162	
	RCA	CD40162	
	Signetics	HEF40162	
	SSS	SCL4162	
	Toshiba	TC40162	
HCF40163	Fairchild	F40163	
	Hitachi	HD14163	
	Motorola	MC14163	
	National	CD40163	
		MM54C163	
		MM74C163	
	RCA	CD40163	
	Signetics	HEF40163	
	SSS	SCL4163	
	Toshiba	TC40163	
HCF4017	Fairchild	F4017	
	Hitachi	HD14017	
	Motorola	MC14017	
	National	CD4017	
	RCA	CD4017	
	Signetics	HEF4017	
	SSS	SCL4017	
	Solitron	CM4017	
	Toshiba	TC4017	
HCF40174	Fairchild	F40174	
	Hitachi	HD14174	
	Motorola	MC14174	
	National	CD40174	
		MM54C174	
		MM74C174	
	RCA	CD40174	
	Signetics	HEF40174	
	SSS	SCL4174	
	Toshiba	TC40174	
HCF4018	Fairchild	F4018	
	Hitachi	HD14018	
	Motorola	MC14018	
	National	CD4018	
	RCA	CD4018	
	Signetics	HEF4018	
	SSS	SCL4018	
	Solitron	CM4018	
	Toshiba	TC4018	
HCF40181	Hitachi	HD14581	
	Motorola	MC14581	
	RCA	CD40181	
		CD4057	
	SSS	SCL4581	
HCF40182	Fairchild	F4582	
	Hitachi	HD14582	
	Motorola	MC14582	
	RCA	CD40182	
	SSS	SCL4582	
HCF4019	Fairchild	F4019	
	National	CD4019	
	OKI	MSM4019	
	RCA	CD4019	
	Sanyo	LC4019	
	Signetics	HEF4019	
	SSS	SCL4019	
	Solitron	CM4019	
	Toshiba	TC4019	
HCF40192	Fairchild	F4029	
	Motorola	MC14029	
	National	CD40192	
		CD4029	
	RCA	CD40192	
		CD4029	
	SGS	HCF4029	
	Signetics	HEF40192	
	SSS	SCL4029	
		SCL4192	
	Solitron	CM4029	
	Toshiba	TC40192	
		TC4029	
HCF40193	Fairchild	F40193	
	National	CD40193	
		MM54C193	
		MM74C193	
	RCA	CD40193	
	Signetics	HEF40193	
	SSS	SCL4193	
	Toshiba	TC40193	
HCF40194	Fairchild	F40194	
	Hitachi	HD14194	
	Motorola	MC14194	
	RCA	CD40194	
	Signetics	HEF40194	
HCF4020	Fairchild	F4020	
	Hitachi	HD14020	
	Motorola	MC14020	
	National	CD4020	
	RCA	CD4020	
	Signetics	HEF4020	
	SSS	SCL4020	
	Solitron	CM4020	
	Toshiba	TC4020	
HCF40208	RCA	CD40208	
HCF4021	Fairchild	F4021	
	Hitachi	HD14021	
	Motorola	MC14021	
	National	CD4021	
	RCA	CD4021	
	Signetics	HEF4021	
	SSS	SCL4021	
	Toshiba	TC4021	
HCF4022	Fairchild	F4022	
	Hitachi	HD14022	
	Motorola	MC14022	
	National	CD4022	
	RCA	CD4022	
	Signetics	HEF4022	
	SSS	SCL4022	
	Solitron	CM4022	
	Toshiba	TC4022	
HCF4023	Fairchild	F4023	
	Hitachi	HD14023	
	Motorola	MC14023	
	National	CD4023	
		MM74C10	
	RCA	CD4023	
	Signetics	HEF4023	
	SSS	SCL4023	
	Solitron	CM4023	
	Toshiba	TC4023	
HCF4024	Fairchild	F4024	
	Hitachi	HD14024	
	Motorola	MC14024	
	National	CD4024	
	RCA	CD4024	
	Signetics	HEF4024	
	SSS	SCL4024	
	Solitron	CM4024	
	Toshiba	TC4024	
HCF4025	Fairchild	F4025	
	Hitachi	HD14025	
	Motorola	MC14025	
	National	CD4025	
	RCA	CD4025	
	Signetics	HEF4025	
	SSS	SCL4025	
	Solitron	CM4025	
	Toshiba	TC4025	
HCF40257	RCA	CD40257	
HCF4026	RCA	CD4026	
	SSS	SCL4026	
	Solitron	CM4026	
HCF4027	Fairchild	F4027	
	Hitachi	HD14027	
	Motorola	MC14027	
	National	CD4027	
		MM74C76	
	OKI	MSM4027	
	RCA	CD4027	
	Sanyo	LC4027	
	Signetics	HEF4027	
	SSS	SCL4027	
	Solitron	CM4027	
HCF4028	Fairchild	F4028	
	Hitachi	HD14028	
	Motorola	MC14028	
	National	CD4028	
		MM74C42	
	OKI	MSM4028	
	Sanyo	LC4028	
	Signetics	HEF4028	
	SSS	SCL4028	
	Solitron	CM4028	
	Toshiba	TC4028	
HCF4029	Fairchild	F4029	
	Motorola	MC14029	
	National	CD40192	
		CD4029	
	RCA	CD40192	
		CD4029	
	SGS	HCF40192	
	Signetics	HEF40192	
	SSS	SCL4029	
		SCL4192	
	Solitron	CM4029	
	Toshiba	TC40192	
		TC4029	
HCF4030	Fairchild	F4030	
	National	CD4030	
	RCA	CD4030	
	Signetics	HEF4030	
	SSS	SCL4030	
	Solitron	CM4030	
	Toshiba	TC4030	
HCF4031	Fairchild	F4031	
	National	CD4031	
	RCA	CD4031	
	Signetics	HEF4731	
HCF4032	Hitachi	HD14032	
	Motorola	MC14032	
	RCA	CD4032	
	Solitron	CM4032	
	Toshiba	TC4032	
HCF4033	RCA	CD4033	
	SSS	SCL4033	
	Solitron	CM4033	
HCF4034	Fairchild	F4034	
	Hitachi	HD14034	
	Motorola	MC14034	
	National	CD4034	
	RCA	CD4034	
	SSS	SCL4034	
	Solitron	CM4034	
	Toshiba	TC4034	
HCF4035	Fairchild	F4035	
	Hitachi	HD14035	
	Motorola	MC14035	
	RCA	CD4035	
	Signetics	HEF4035	
	Solitron	CM4035	
	Toshiba	TC4035	
HCF4038	Hitachi	HD14038	
	Motorola	MC14038	
	RCA	CD4038	
	Solitron	CM4038	
	Toshiba	TC4038	
HCF4040	Fairchild	F4040	
	Hitachi	HD14040	
	Motorola	MC14040	
	National	CD4040	
	RCA	CD4040	
	Signetics	HEF4040	
	SSS	SCL4040	
	Solitron	CM4040	
	Toshiba	TC4040	
HCF4041	Fairchild	F4041	
	National	CD4041	
	RCA	CD4041	
	Signetics	HEF4041	
	SSS	SCL4041	
	Solitron	CM4041	
HCF4042	Fairchild	F4042	
	Hitachi	HD14042	
	Motorola	MC14042	
	National	CD4042	
	RCA	CD4042	
	Signetics	HEF4042	
	SSS	SCL4042	
	Solitron	CM4042	
	Toshiba	TC4042	
HCF4043	Hitachi	HD14043	
	Motorola	MC14043	
	National	CD4043	
	RCA	CD4043	
	Signetics	HEF4043	
	SSS	SCL4043	
	Solitron	CM4043	
	Toshiba	TC4043	
HCF4044	Fairchild	F4044	
	Hitachi	HD14044	
	Motorola	MC14044	
	National	CD4044	
	RCA	CD4044	
	Signetics	HEF4044	
	Solitron	CM4044	
	Toshiba	TC4044	
HCF4045	Fairchild	F4521	
	Motorola	MC14521	
	RCA	CD4045	
	Signetics	HEF4521	
	SSS	SCL4445	
	Solitron	CM4045	
	Toshiba	TC4521	
HCF4046	Fairchild	F4046	
	Hitachi	HD14046	
	Motorola	MC14046	
	National	CD4046	
	RCA	CD4046	
	SSS	SCL4046	
	Solitron	CM4046	
HCF4047	Fairchild	F4047	
	National	CD4047	
	RCA	CD4047	
	Signetics	HEF4047	
	SSS	SCL4047	

(Continued)

◆ Discontinued

Bold face device numbers indicate manufacturers data is provided in the IC Master on the pages noted.

© IC MASTER 1984

SGS-ATES Semiconductor (Cont'd)

Manufacturer Device	Replacement Source	Device	IC Master Page
HCF4047	Solitron	CM4047	
	Toshiba	TC4047	
HCF4048	National	CD4048	
	RCA	CD4048	
	SSS	SCL4402	
	Solitron	CM4048	
HCF4049	Fairchild	F4049	
	Hitachi	HD14049	
	Motorola	MC14049	
	National	CD4049	
	OKI	MSM4049	
	RCA	CD4049	
	Sanyo	LC4049	
	Signetics	HEF4049	
	SSS	SCL4049	
	Solitron	CM4049	
	Toshiba	TC4049	
HCF4050	Fairchild	F4050	
	Hitachi	HD14050	
	Motorola	MC14050	
	National	CD4050	
	RCA	CD4050	
	Signetics	HEF4050	
	SSS	SCL4050	
	Solitron	CM4050	
	Toshiba	TC4050	
HCF4051	Fairchild	F4051	
	Hitachi	HD14051	
	Motorola	MC14051	
	National	CD4051	
	RCA	CD4051	
	Signetics	HEF4051	
	SSS	SCL4051	
	Solitron	CM4051	
	Toshiba	TC4051	
HCF4053	Fairchild	F4053	
	Hitachi	HD14053	
	Motorola	MC14053	
	National	CD4053	
	RCA	CD4053	
	Signetics	HEF4053	
	SSS	SCL4053	
	Solitron	CM4053	
	Toshiba	TC4053B	
HCF4054	RCA	CD4054	
	Toshiba	TC4054	
HCF4055	Mitel	MD4055	
	RCA	CD4055	
	Toshiba	TC4055	
HCF4056	Mitel	MD4056	
	RCA	CD4056	
	Toshiba	TC4056	
HCF4060	Motorola	MC14060	
	National	CD4060	
	RCA	CD4060	
	Signetics	HEF4060	
	SSS	SCL4060	
HCF4063	RCA	CD4063	
	Toshiba	TC4063	
HCF4066	Fairchild	F4016	
		F4066	
	Hitachi	HD14016	
		HD14066	
	Motorola	MC14016	
		MC14066	
	National	CD4016	
		CD4066	
	RCA	CD4016	
		CD4066	
	Sanyo	LC4016	
		LC4066	
	SGS	HCF4016	
	Signetics	**HEF4016**	**864**
		HEF4066	
	SSS	SCL4016	
		SCL4066	
	Solitron	CM4016	
		CM4066	
		HCF4016	
	Toshiba	TC4016	
		TC4066	
HCF4067	Fairchild	F4067	
	Motorola	MC14067	
	RCA	CD4067	
	Signetics	HEF4067	
HCF4068	Fairchild	F4068	
	Hitachi	HD14068	
	Motorola	MC14068	
	RCA	CD4068	

(Continued)

Manufacturer Device	Replacement Source	Device	IC Master Page
HCF4068	Signetics	HEF4068	
	SSS	SCL4068	
	Solitron	CM4068	
	Toshiba	TC4068	
HCF4069	Fairchild	F4069	
	Hitachi	HD14069	
	Motorola	MC14069	
	National	CD4069	
		MM54C04	
		MM74C04	
	OKI	MSM4069	
	RCA	CD4069	
	Sanyo	LC4069	
	Signetics	HEF4069	
	SSS	SCL4069	
		SCL4449	
	Solitron	CM4069	
	Toshiba	TC4069	
HCF4070	Fairchild	F4070	
	Hitachi	HD14070	
	Motorola	MC14070	
	National	CD4070	
		MM74C86	
	RCA	CD4070	
	Signetics	HEF4070	
	SSS	SCL4070	
	Solitron	CM4070	
HCF4071	Fairchild	F4071	
	Hitachi	HD14071	
	Motorola	MC14071	
	National	CD4071	
		MM74C32	
	OKI	MSM4071	
	RCA	CD4071	
	Sanyo	LC4071	
	Signetics	HEF4071	
	SSS	SCL4071	
	Solitron	CM4071	
	Toshiba	TC4071	
HCF4072	Fairchild	F4072	
	Hitachi	HD14072	
	Motorola	MC14072	
	National	CD4072	
	RCA	CD4072	
	Signetics	HEF4072	
	SSS	SCL4072	
	Toshiba	TC4072	
HCF4073	Fairchild	F4073	
	Hitachi	HD14073	
	Motorola	MC14073	
	National	CD4073	
	RCA	CD4073	
	Signetics	HEF4073	
	SSS	SCL4073	
	Solitron	CM4073	
	Toshiba	TC4073	
HCF4075	Fairchild	F4075	
	Hitachi	HD14075	
	Motorola	MC14075	
	National	CD4075	
	RCA	CD4075	
	Signetics	HEF4075	
	SSS	SCL4075	
	Solitron	CM4075	
	Toshiba	TC4075	
HCF4076	Fairchild	F4076	
	Hitachi	HD14076	
	Motorola	MC14076	
	National	CD4076	
		MM54C173	
		MM74C173	
	RCA	CD4076	
	Signetics	HEF4076	
	SSS	SCL4076	
	Solitron	CM4076	
	Toshiba	TC4076	
HCF4077	Fairchild	F4077	
	Hitachi	HD14077	
	Motorola	MC14077	
	National	CD4077	
	RCA	CD4077	
	Signetics	HEF4077	
	SSS	SCL4077	
	Solitron	CM4077	
HCF4078	Fairchild	F4078	
	Hitachi	HD14078	
	Motorola	MC14078	
	RCA	CD4078	
	Signetics	HEF4078	
	SSS	SCL4078	
	Solitron	CM4078	
	Toshiba	TC4078	

Manufacturer Device	Replacement Source	Device	IC Master Page
HCF4081	Fairchild	F4081	
	Hitachi	HD14081	
	Motorola	MC14081	
	National	CD4081	
		MM74C08	
	OKI	MSM4081	
	RCA	CD4081	
	Sanyo	LC4081	
	Signetics	HEF4081	
	SSS	SCL4081	
	Solitron	CM4081	
	Toshiba	TC4081	
HCF4082	Fairchild	F4082	
	Hitachi	HD14082	
	Motorola	MC14082	
	National	CD4082	
	RCA	CD4082	
	Signetics	HEF4082	
	SSS	SCL4082	
	Toshiba	TC4082	
HCF4085	Fairchild	F4085	
	National	CD4085	
	RCA	CD4085	
	Signetics	HEF4085	
	SSS	SCL4085	
	Toshiba	TC4085	
HCF4086	Fairchild	F4086	
	RCA	CD4086	
	Signetics	HEF4086	
	SSS	SCL4086	
	Toshiba	TC4086	
HCF4089	National	CD4089	
	RCA	CD4089	
HCF4093	Fairchild	F4093	
	Hitachi	HD14093	
	Motorola	MC14093	
	National	CD4093	
	OKI	MSM4093	
	RCA	CD4093	
	Sanyo	LC4093	
	Signetics	HEF4093	
	SSS	SCL4093	
	Toshiba	TC4093	
HCF4094	Hitachi	HD14094	
	Motorola	MC14094	
	RCA	CD4094	
	SSS	SCL4094	
	Toshiba	TC4094	
HCF4095	RCA	CD4095	
HCF4096	RCA	CD4096	
HCF4097	Fairchild	F4097	
	Motorola	MC14097	
	RCA	CD4097	
HCF4098	Fairchild	F4528	
	Hitachi	HD14528	
	Motorola	MC14528	
	National	CD4528	
		MM74C221	
	RCA	CD4098	
	Signetics	HEF4528	
	SSS	SCL4528	
	Toshiba	TC4528	
HCF4099	Hitachi	HD14099	
	Motorola	MC14099	
	National	CD4099	
	RCA	CD4099	
	SSS	SCL4099	
	Toshiba	TC4099	
HCF4502	Hitachi	HD14502	
	Motorola	MC14502	
	RCA	CD4502	
	Signetics	HEF4502	
	SSS	SCL4502	
HCF4508	Hitachi	HD14508	
		HD74147	
	Motorola	MC14508	
	National	DM74147	
	RCA	CD4508	
	Signetics	**74147**	**861**
		HEF4508	
		N82147	
	SSS	SCL4508	
	Solitron	CM4508	
	TI	**SN74147**	**970**
	Toshiba	TC4508	
HCF4510	Fairchild	F4510	
	Hitachi	HD14510	
	Motorola	MC14510	
	National	CD4510	
	RCA	CD4510	
	Signetics	HEF4510	
	SSS	SCL4510	

(Continued)

Manufacturer Device	Replacement Source	Device	IC Master Page
HCF4510	Solitron	CM4510	
	Toshiba	TC4510	
HCF4511	Fairchild	F4511	
	Hitachi	HD14511	
	Mitel	MD4511	
	MMI	4511	
	Motorola	MC14511	
	National	CD4511	
	NEC	μPD4511	
	RCA	CD4511	
	Signetics	HEF4511	
	SSS	SCL4511	
	Solitron	CM4511	
	Toshiba	TC4511	
HCF4512	Fairchild	F4512	
	Hitachi	HD14512	
	Motorola	MC14512	
	National	CD4512	
	RCA	CD4512	
	SSS	SCL4512	
	Toshiba	TC4512	
HCF4514	Fairchild	F4514	
	Hitachi	HD14514	
	Motorola	MC14514	
	National	CD4514	
	RCA	CD4514	
	Signetics	HEF4514	
	SSS	SCL4514	
	Solitron	CM4514	
	Toshiba	TC4514	
HCF4515	Fairchild	F4515	
	Hitachi	HD14515	
	Motorola	MC14515	
	National	CD4515	
	RCA	CD4515	
	Signetics	HEF4515	
	SSS	SCL4515	
	Solitron	CM4515	
	Toshiba	TC4515	
HCF4516	Fairchild	F4516	
	Hitachi	HD14516	
	Motorola	MC14516	
	National	CD4516	
	RCA	CD4516	
	Signetics	HEF4516	
	SSS	SCL4516	
	Solitron	CM4516	
	Toshiba	TC4516	
HCF4518	Fairchild	F4518	
	Hitachi	HD14518	
	Motorola	MC14518	
	National	CD4518	
	RCA	CD4518	
	Signetics	HEF4518	
	SSS	SCL4518	
	Solitron	CM4518	
	Toshiba	TC4518	
HCF4520	Fairchild	F4520	
	Hitachi	HD14520	
	Motorola	MC14520	
	National	CD4520	
	OKI	MSM4520	
	RCA	CD4520	
	Sanyo	LC4520	
	Signetics	HEF4520	
	SSS	SCL4520	
	Solitron	CM4520	
	Toshiba	TC4520	
HCF4527	Fairchild	F4527	
	Hitachi	HD14527	
	Motorola	MC14527	
	National	CD4527	
	RCA	CD4527	
	Signetics	HEF4527	
	SSS	SCL4527	
	Toshiba	TC4527	
		TR4527	
HCF4532	Fairchild	F4532	
	Hitachi	HD14532	
	Motorola	MC14532	
	RCA	CD4532	
	Signetics	HEF4532	
	SSS	SCL4532	
	Toshiba	TC4532	
HCF4555	Fairchild	F4555	
	Hitachi	HD14555	
	Motorola	MC14555	
	RCA	CD4555	
	Signetics	HEF4555	
	SSS	SCL4555	
	Toshiba	TC4555	

◆ Discontinued

The manufacturers report their devices can be used as direct replacements.
Performance details often differ, so compare the specifications considering your requirements.

SGS-ATES Semiconductor (Cont'd)

Manufacturer Device	Replacement Source	Device	IC Master Page
HCF4556	Fairchild	F4556	
	Motorola	MC14556	
	RCA	CD4556	
	Signetics	HEF4556	
	SSS	SCL4556	
	Toshiba	TC4556	
HCF4XXX	Fairchild	34XXX	
		F4XXX	
	Hitachi	HD14XXX	
	Motorola	MC14XXX	
	National	CD4XXX	
	OKI	MSM4XXX	
	RCA	CD4XXX	
	SSS	SCL4XXX	
	Solitron	CM4XXX	
	TI	TP4000 series	
	Toshiba	TC4XXX	
L123	Fairchild	μA723	
	Hitachi	HA17723	
	Intersil	LM723	
	Motorola	**MC1723**	**3532**
	National	LM723	
	Raytheon	RC723	
		RM723	
	RCA	**CA723**	**3602**
		LM723	
	Signetics	μA723	
	SiliconG	SG723	
	TI	μA723	
	Thomson-CSF		
		SFC2723	
L201	Exar	XR2001	
		XR2201	
	Fairchild	9665	
	Motorola	**MC1411**	**3064**
		ULN2001	
		XR2201	
	NEC	μPA2001	
	RIFA	PBD352301	
	Sanyo	LB1231	
	SiliconG	SG2001	
	Sprague	ULN-2001	
		ULN-2021	
		ULQ-2002	
		ULS-2001	
	TI	ULN2001	
	Toshiba	TD62001	
L202	Exar	XR2002	
		XR2202	
	Fairchild	9666	
		MC1412	
	Motorola	**MC1412**	**3064**
		ULN2002	
	NEC	μPA2002	
	RIFA	PBD352304	
	Sanyo	LB1232	
	Signetics	NE5602	
	Sprague	ULN-2002	
		ULQ-2003	
	TI	ULN2002	
	Toshiba	TD62002	
L203	Exar	XR2003	
		XR2004	
		XR2203	
	Fairchild	9667	
		MC1413	
	Mitsubishi	M54523	
	Motorola	**MC1413**	**3064**
		ULN2003	
	Sanyo	LB1233	
	Signetics	NE5603	
		ULN2003	
	SiliconG	SG2003	
	Sprague	ULN-2003	
		ULQ-2003	
		ULQ-2004	
		ULS-2003	
		ULS-2004	
	TI	ULN2003	
	Toshiba	TD62003	
L204	Exar	XR2204	
	Fairchild	9668	
	Mitsubishi	M54526	
	Motorola	**MC1416**	**3064**
		ULN2004	
	Sanyo	LB1234	
	Signetics	NE5604	
		ULN2004	
	SiliconG	SG2004	
		(Continued)	

Manufacturer Device	Replacement Source	Device	IC Master Page
L204	Sprague	ULN-2004	
		ULS2004	
	TI	ULN2004	
	Toshiba	TD62004	
L601	Sprague	ULN-2821	
L602	Sprague	ULN-2822	
L603	Sprague	ULN-2823	
L604	Sprague	ULN-2824	
L7805	AMD	LM309	
	Fairchild	μA309	
		μA7805	
	Lambda	LLM309	
		LMC7805	
		LμA7805	
	Motorola	LM309	
		MC7805	**3531**
	National	LM309	
		LM7805	
	NEC	μPC7805	
	SGS	L7810	
	SiliconG	SG309	
		SG340-05	
		SG340-5	
	TI	μA7805	
	Thomson-CSF		
		SFC2309	
	Toshiba	TA78005	
L7810	AMD	LM309	
	Fairchild	μA309	
		μA7805	
	Lambda	LLM309	
		LMC7805	
		LμA7805	
	Motorola	LM309	
		MC7805	**3531**
	National	LM309	
		LM7805	
	NEC	μPC7805	
	SGS	L7805	
	SiliconG	SG309	
		SG340-05	
		SG340-5	
	TI	μA7805	
	Thomson-CSF		
		SFC2309	
	Toshiba	TA78005	
L7812	Fairchild	μA7812	
	Lambda	LMC7812	
		LμA7812	
	Motorola	**MC7812**	**3531**
	National	LM7812	
	NEC	μPC7812	
	SiliconG	SG7812	
	TI	μA7812	
	Toshiba	TA78012	
L7815	Fairchild	μA7815	
		μA78L15	
	Lambda	LMC7815	
		LμA7815	
	Motorola	**MC7815**	**3531**
		MC78L15	
	National	LM340-15	
		LM340LA-15	
		LM340T-15	
		LM7815	
		LM78L15	
	NEC	μPC7815	
		μPC78L15	
	SiliconG	SG340-15	
		SG7815	
	TI	LM340-15	
		μA7815	
		μA78L15	
	Thomson-CSF		
		SFC2815	
	Toshiba	TA78015	
L7818	**Motorola**	**MC7818**	**3532**
L7824	Fairchild	μA7824	
	Lambda	LMC7824	
		LμA7824	
	Motorola	**MC7824**	**3532**
	NEC	μPC7824	
	SiliconG	SG7824	
	TI	LM340-24	
		μA7824	
LL5000	LSIComp	LL5000	
	RCA	LL5000	
	Toshiba	LL5000	
M2102	Intel	2102	
M2102A	Fairchild	2102H	
	National	MM2102A	
	Panasonic	MN2102	

Manufacturer Device	Replacement Source	Device	IC Master Page
M22100	Motorola	MC1452100	
	RCA	**CD22100**	**840**
M2316	AMD	AM9218	
	Fairchild	3516	
		68316	
		F3516	
		F35316	
		F68316	**1464**
	GI	RO3-9316	
	GTEMicro	2316	
	Intel	2316	
	Mostek	MK34000	
	Motorola	MCM68316	
		MCM68A316	
		MM2316	
	National	MM52116	
		MM5258	
	NCR	2316	
		NCR2316	
	NEC	μPD2316	
	OKI	**MSM2916**	**4118**
	Rockwell	R2316	
	TI	SBP8316	
	Toshiba	TMM331A	
		TMM334	
M2362	**Signetics**	**2656**	**4206**
	Synertek	2364B	
M2716	AMD	AM2716	
	Fujitsu	MB2716	
	Hitachi	HN462716	
	Intel	2716	
	Mostek	MK2716	
	Motorola	MCM2716	
	National	MM2716	
	NEC	μPD2716	
	OKI	**MSM2716**	**4118**
	Panasonic	MN2716	
	TI	TMS2516	
M330	Intel	8102A	
	NEC	μPD2102	
M36000	AMI	S68364	
	GI	RO9464	
	GTEMicro	G5364	
	Intersil	IM7364	
	MicroPwr	MP2364	
	Mitsubishi	M5L2364	
	Mostek	MK36000	
	Motorola	**MCM68364**	**4048,4054**
	National	MM5235	
	NCR	NCR2364	
	RCA	**CDM5364**	**1593**
	SMOS	SMM2364	
	Signetics	2664A	
	SSS	SCM23C64	
		SCM23C65	
	SMC	ROM36000	
	Synertek	**SY2364**	**4211**
	TI	**TMS4764**	**4225**
	Toshiba	TM2364	
	VTI	**VT2364**	**4250**
M3870	Fairchild	3870	
	Mostek	MK3870	
	SMC	MPU3870	
	Telefunken	U3870	
M3872	Fairchild	F3872	
M4027	Fairchild	M4027	
	Mostek	MK4027	
M4116	AMD	AM9016	
	Fairchild	F4116	
	Hitachi	HM4716	
	Intel	2118	
	Intersil	IM7116	
	ITT	ITT4116	
	Mostek	MK4116	
	Motorola	MCM4116	
	National	MM5290	
	NEC	**μPD416**	**4073**
	Panasonic	MN4116	
	Siemens	HYB4116	
	Signetics	2690	
	TI	TMS4116	
M5116	Fairchild	5116	
	Mostek	MK5116	
	National	TP5116	
M5156	Fairchild	5156	
	Mostek	MK5156	
	National	TP5156	
T74LS00	Fairchild	74LS00	
	Hitachi	HD74LS00	
	Motorola	SN74LS00	
	National	DM74LS00	
		(Continued)	

Manufacturer Device	Replacement Source	Device	IC Master Page
T74LS00	Signetics	74LS00	
	TI	**SN74LS00**	**920**
T74LS02	Fairchild	74LS02	
	Hitachi	HD74LS02	
	Motorola	SN74LS02	
	National	DM74LS02	
	Signetics	74LS02	
	TI	**SN74LS02**	**920**
T74LS03	Fairchild	74LS03	
	Hitachi	HD74LS03	
	Motorola	SN74LS03	
	National	DM74LS03	
	TI	**SN74LS03**	**921**
T74LS04	Fairchild	74LS04	
	Hitachi	HD74LS04	
	Motorola	SN74LS04	
	National	DM74LS04	
	Signetics	74LS04	
	TI	**SN74LS04**	**921**
T74LS05	Fairchild	74LS05	
	Hitachi	HD74LS05	
	Motorola	SN74LS05	
	National	DM74LS05	
	NEC	μPB74LS05	
	Signetics	74LS05	
	TI	**SN74LS05**	**921**
T74LS08	Fairchild	74LS08	
	Hitachi	HD74LS08	
	Motorola	SN74LS08	
	National	DM74LS08	
	Signetics	74LS08	
	TI	**SN74LS08**	**922**
T74LS09	Fairchild	74LS09	
	Hitachi	HD74LS09	
	Motorola	SN74LS09	
	National	DM74LS09	
	TI	**SN74LS09**	**923**
T74LS10	Fairchild	74LS10	
	Hitachi	HD74LS10	
	Motorola	SN74LS10	
	National	DM74LS10	
	Signetics	74LS10	
	TI	**SN74LS10**	**923**
T74LS109	Fairchild	74LS109	
	Hitachi	HD74LS109	
	Motorola	SN74LS109	
		SN74LS109A	
	National	DM74LS109	
	Signetics	74LS109	
	TI	**SN74LS109A**	**958**
T74LS11	Fairchild	74LS11	
	Hitachi	HD74LS11	
	Motorola	SN74LS11	
	National	DM74LS11	
	Signetics	74LS11	
	TI	**SN74LS11**	**923**
T74LS112	Fairchild	74LS112	
	Hitachi	HD74LS112	
	Motorola	SN74LS112A	
	National	DM74LS112	
	Signetics	74LS112	
	TI	**SN74LS112A**	**959**
T74LS113	Fairchild	74LS113	
	Hitachi	HD74LS113	
	Motorola	SN74LS113A	
	National	DM74LS113	
	Signetics	74LS113	
	TI	**SN74LS113A**	**959**
T74LS114	Fairchild	74LS114	
	Hitachi	HD74LS114	
	Motorola	SN74LS114A	
	National	DM74LS114	
	TI	**SN74LS114A**	**960**
T74LS125	Fairchild	74LS125A	
	Motorola	SN74LS125A	
	National	DM74LS125	
	Signetics	74LS125A	
	TI	**SN74LS125A**	**962**
T74LS126	Fairchild	74LS126	
	Motorola	SN74LS126A	
	National	DM74LS126	
	Signetics	74LS126A	
	TI	**SN74LS126A**	**962**
T74LS132	Fairchild	74LS132	
	Hitachi	HD74LS132	
	Motorola	SN74LS132	
	National	DM74LS132	
	Signetics	74LS132	
	TI	**SN74LS132**	**965**
T74LS136	Fairchild	74LS136	
	Hitachi	HD74LS136	
	Motorola	SN74LS136	
		(Continued)	

◆ Discontinued

Bold face device numbers indicate manufacturers data is provided in the IC Master on the pages noted.

© IC MASTER 1984

SGS-ATES Semiconductor (Cont'd)

Manufacturer Device	Replacement Source	Device	IC Master Page
T74LS136	National	DM74LS136	
	Signetics	74LS136	
	TI	**SN74LS136**	**966**
T74LS138	Fairchild	74LS138	
	Hitachi	HD74LS138	
	Motorola	SN74LS138	
	National	DM74LS138	
	Signetics	74LS138	
	TI	**SN74LS138**	**968**
T74LS139	Fairchild	74LS139	
	Hitachi	HD74LS139	
	Motorola	SN74LS139	
	National	DM74LS139	
	Signetics	74LS139	
	TI	**SN74LS139**	**968**
T74LS15	Fairchild	74LS15	
	Hitachi	HD74LS15	
	Motorola	SN74LS15	
	National	DM74LS15	
	TI	**SN74LS15**	**925**
T74LS151	Fairchild	74LS151	
	Hitachi	HD74LS151	
		HD74LS151A	
	Motorola	SN74LS151	
	National	DM74LS151	
	Signetics	74LS151	
	TI	**SN74LS151**	**972**
T74LS152	TI	SN74LS152	
T74LS153	Fairchild	74LS153	
	Hitachi	HD74LS153	
	Motorola	SN74LS153	
	National	DM74LS153	
	Signetics	74LS153	
	TI	**SN74LS153**	**972**
T74LS156	Fairchild	74LS156	
	Hitachi	HD74LS156	
	Motorola	SN74LS156	
	National	DM74LS156	
	Signetics	74LS156	
	TI	**SN74LS156**	**974**
T74LS157	Fairchild	74LS157	
	Hitachi	HD74LS157	
	Motorola	SN74LS157	
	National	DM74LS157	
	Signetics	74LS157	
	TI	**SN74LS157**	**975**
T74LS158	Fairchild	74LS158	
	Hitachi	HD74LS158	
	Motorola	SN74LS158	
	National	DM74LS158	
	Signetics	74LS158	
	TI	**SN74LS158**	**975**
T74LS160	Fairchild	74LS160	
	Hitachi	HD74LS160A	
	Motorola	SN74LS160A	
	National	DM74LS160	
	Signetics	74LS160	
		74LS160A	
	TI	**SN74LS160A**	**977**
T74LS161	Fairchild	74LS161A	
	Hitachi	HD74LS161A	
	Motorola	SN74LS161A	
	National	DM74LS161	
	NEC	μPB74LS161	
	Signetics	74LS161A	
	TI	**SN74LS161A**	**977**
T74LS162	Fairchild	74LS162	
	Hitachi	HD74LS162A	
	Motorola	SN74LS162A	
	National	DM74LS162	
	Signetics	74LS162A	
	TI	**SN74LS162A**	**978**
T74LS163	Fairchild	74LS163	
	Hitachi	HD74LS163	
		HD74LS163A	
	Motorola	SN74LS163A	
	National	DM74LS163	
	Signetics	74LS163A	
	TI	**SN74LS163A**	**978**
T74LS164	Fairchild	74LS164	
	Hitachi	HD74LS164	
	Motorola	SN74LS164A	
	National	DM74LS164	
	Signetics	74LS164	
		74LS164A	
	TI	**SN74LS164**	**979**
T74LS165	Fairchild	74LS165	
	Motorola	SN74LS165	
	TI	**SN74LS165**	**979**
T74LS170	Fairchild	74LS170	
	Motorola	SN74LS170	
	National	DM74LS170	
	Signetics	74LS170	
	TI	**SN74LS170**	**981**
T74LS173	Fairchild	74LS173	
	Motorola	SN74LS173A	
	National	DM74LS173	
	Signetics	74LS173	
	TI	**SN74LS173A**	**982**
T74LS174	Fairchild	74LS174	
	Hitachi	HD74LS174	
	Motorola	SN74LS174	
	National	DM74LS174	
	Signetics	74LS174	
	TI	**SN74LS174**	**983**
T74LS175	Fairchild	74LS175	
	Hitachi	HD74LS175	
	Motorola	SN74LS175	
	Signetics	74LS175	
	TI	**SN74LS175**	**983**
T74LS181	Fairchild	74LS181	
	Hitachi	HD74LS181	
	Motorola	SN74LS181	
	Signetics	74LS181	
	TI	**SN74LS181**	**985**
T74LS190	Fairchild	74LS190	
	Hitachi	HD74LS190	
	Motorola	SN74LS190	
	National	DM74LS190	
	TI	**SN74LS190**	**989**
T74LS191	Fairchild	74LS191	
	Hitachi	HD74LS191	
	Motorola	SN74LS191	
	National	DM74LS191	
	Signetics	74LS191	
	TI	**SN74LS191**	**989**
T74LS192	Fairchild	74LS192	
	Hitachi	HD74LS192	
	Motorola	SN74LS192	
	National	DM74LS192	
	Signetics	74LS192	
	TI	**SN74LS192**	**990**
T74LS193	Fairchild	74LS193	
	Hitachi	HD74LS193	
	Motorola	SN74LS193	
	National	DM74LS193	
	Signetics	74LS193	
	TI	**SN74LS193**	**990**
T74LS194A	Fairchild	74LS194A	
	Hitachi	HD74LS194A	
	Motorola	SN74LS194A	
	National	DM74LS194	
	Signetics	74LS194A	
	TI	**SN74LS194A**	**990**
T74LS195A	Fairchild	74LS195A	
	Hitachi	HD74LS195A	
	Motorola	SN74LS195A	
	National	DM74LS195	
	Signetics	74LS195A	
	TI	**SN74LS195A**	**991**
T74LS20	Fairchild	74LS20	
	Hitachi	HD74LS20	
	Motorola	SN74LS20	
	National	DM74LS20	
	Signetics	74LS20	
	TI	**SN74LS20**	**926**
T74LS21	Fairchild	74LS21	
	Hitachi	HD74LS21	
	Motorola	SN74LS21	
	National	DM74LS21	
	Signetics	74LS21	
	TI	**SN74LS21**	**927**
T74LS22	Fairchild	74LS22	
	Hitachi	HD74LS22	
	Motorola	SN74LS22	
	National	DM74LS22	
	TI	**SN74LS22**	**927**
T74LS248	Fairchild	74LS248	
	Hitachi	HD74LS248	
	Motorola	SN74LS248	
	National	DM74LS248	
	TI	**SN74LS248**	**1002**
T74LS249	Fairchild	74LS249	
	Hitachi	HD74LS249	
	Motorola	SN74LS249	
	National	DM74LS249	
	TI	**SN74LS249**	**1002**
T74LS251	Fairchild	74LS251	
	Hitachi	HD74LS251	
	Motorola	SN74LS251	
	National	DM74LS251	

(Continued)

Manufacturer Device	Replacement Source	Device	IC Master Page
T74LS251	Signetics	74LS251	
	TI	**SN74LS251**	**1003**
T74LS253	Fairchild	74LS253	
	Hitachi	HD74LS253	
	Motorola	SN74LS253	
	National	DM74LS253	
		DM8214	
	Signetics	74LS253	
	TI	**SN74LS253**	**1003**
T74LS256	TI	SN74LS256	
T74LS257	Fairchild	74LS257A	
	Hitachi	HD74LS257	
	Motorola	SN74LS257A	
	National	DM74LS257	
	Signetics	74LS257	
		74LS257A	
	TI	SN74LS257	
T74LS258	Fairchild	74LS258A	
	Hitachi	HD74LS258	
	Motorola	SN74LS258A	
	National	DM74LS258	
	Signetics	74LS258	
	TI	SN74LS258	
T74LS259	Fairchild	74LS259	
	Motorola	SN74LS259	
	Signetics	74LS259	
	TI	**SN74LS259**	**1005**
T74LS26	Fairchild	74LS26	
	Hitachi	HD74LS26	
	Motorola	SN74LS26	
	National	DM74LS26	
	Signetics	74LS26	
	TI	**SN74LS26**	**928**
T74LS260	TI	SN74LS260	
T74LS266	Fairchild	74LS266	
	Motorola	SN74LS266	
	National	DM74LS266	
	Raytheon	RC8242	
	Signetics	74LS266	
		N8242	**876**
	TI	**SN74LS266**	**1007**
T74LS27	Fairchild	74LS27	
	Hitachi	HD74LS27	
	Motorola	SN74LS27	
	National	DM74LS27	
	Signetics	74LS27	
	TI	**SN74LS27**	**929**
T74LS273	AMD	**AM25LS273**	**1427**
	Fairchild	74LS273	
	MMI	**SN74LS273**	**804**
	Motorola	SN74LS273	
	Signetics	74LS273	
	TI	**SN74LS273**	**1007**
T74LS28	Fairchild	74LS28	
	Motorola	SN74LS28	
	TI	**SN74LS28**	**929**
T74LS283	Fairchild	74LS283	
	Hitachi	HD74LS283	
		HD74LS283A	
	Motorola	SN74LS283	
	National	DM74LS283	
	Signetics	74LS283	
	TI	**SN74LS283**	**1011**
T74LS290	Fairchild	74LS290	
	Hitachi	HD74LS290	
	Motorola	SN74LS290	
	National	DM74LS290	
	Signetics	74LS290	
	TI	**SN74LS290**	**1012**
T74LS292	TI	**SN74LS292**	**1013**
T74LS293	Fairchild	74LS293	
	Hitachi	HD74LS293	
	Motorola	SN74LS293	
	National	DM74LS293	
	Signetics	74LS293	
	TI	**SN74LS293**	**1014**
T74LS295A	Fairchild	74LS295A	
	Motorola	SN74LS295A	
	Signetics	74LS295A	
		74LS295B	
	TI	**SN74LS295B**	**1014**
T74LS298	Fairchild	74LS298	
	Hitachi	HD74LS298	
	Motorola	SN74LS298	
	Signetics	74LS298	
	TI	**SN74LS298**	**1015**
T74LS299	AMD	SN74LS299	
	Fairchild	74LS299	
	Hitachi	HD74LS299	
	Motorola	SN74LS299	
	TI	**SN74LS299**	**1016**
T74LS30	Fairchild	74LS30	
	Hitachi	HD74LS30	
	Motorola	SN74LS30	
	National	DM74LS30	
	Signetics	74LS30	
	TI	**SN74LS30**	**929**
T74LS32	Fairchild	74LS32	
	Hitachi	HD74LS32	
	Motorola	SN54LS32	
		SN74LS32	
	National	DM74LS32	
	Signetics	74LS32	
	TI	**SN74LS32**	**930**
T74LS352	Fairchild	74LS352	
	Motorola	SN74LS352	
	National	DM74LS352	
	TI	**SN74LS352**	**1020**
T74LS353	Fairchild	74LS353	
	Motorola	SN74LS353	
	National	DM74LS353	
	TI	**SN74LS353**	**1021,1022**
T74LS365A	Fairchild	74LS365A	
	Motorola	SN74LS365A	
	National	DM74LS365	
	Signetics	74LS365	
		74LS365A	
	TI	**SN74LS365A**	**1023**
T74LS366A	Fairchild	74LS366A	
	Motorola	SN74LS366A	
	National	DM74LS366	
	Signetics	74LS366A	
	TI	**SN74LS366A**	**1023**
T74LS367A	Fairchild	74LS367A	
	Hitachi	HD74LS367	
		HD74LS367A	
	Motorola	SN74LS367A	
	National	DM74LS367	
	Signetics	74LS367	
		74LS367A	
	TI	**SN74LS367A**	**1024**
T74LS368	Fairchild	74LS368A	
	Hitachi	HD74LS368	
	Motorola	SN74LS368A	
	National	DM74LS368	
	Signetics	74LS368	
		74LS368A	
	TI	**SN74LS368A**	**1024**
T74LS37	Fairchild	74LS37	
	Hitachi	HD74LS37	
	Motorola	SN74LS37	
	National	DM74LS37	
	Signetics	74LS37	
	TI	**SN74LS37**	**932**
T74LS373	Fairchild	74LS373	
	MMI	**SN74LS373**	**804**
	Motorola	SN74LS373	
	Signetics	74LS373	
	TI	**SN74LS373**	**1025**
T74LS374	Fairchild	74LS374	
	MMI	**SN74LS374**	**804**
	Motorola	SN74LS374	
	National	DM74LS374	
	Signetics	74LS374	
	TI	**SN74LS374**	**1026**
T74LS377	AMD	**AM25LS377**	**1427**
	Fairchild	74LS377	
	MMI	**SN74LS377**	**804**
	Motorola	SN74LS377	
	Signetics	74LS377	
	TI	**SN74LS377**	**1027**
T74LS378	AMD	SN74LS378	
	Fairchild	74LS378	
	Motorola	SN74LS378	
	Signetics	74LS378	
	TI	**SN74LS378**	**1027**
T74LS379	AMD	SN74LS379	
	Fairchild	74LS379	
	Motorola	SN74LS379	
	TI	**SN74LS379**	**1028**
T74LS38	Fairchild	74LS38	
	Hitachi	HD74LS38	
	Motorola	SN74LS38	
	National	DM74LS38	
	Signetics	74LS38	
	TI	**SN74LS38**	**932**
T74LS390	Fairchild	74LS390	
	Motorola	SN74LS390	
	TI	**SN74LS390**	**1031**
T74LS393	Fairchild	74LS393	
	Motorola	SN74LS393	

(Continued)

◆ Discontinued

The manufacturers report their devices can be used as direct replacements.
Performance details often differ, so compare the specifications considering your requirements.

SGS-ATES Semiconductor (Cont'd)

Manufacturer Device	Replacement Source	Device	IC Master Page
T74LS393	Signetics	74LS393	
	TI	**SN74LS393**	**1031**
T74LS395	Fairchild	74LS395	
	Motorola	SN74LS395	
	National	DM74LS395	
	Signetics	74LS395	
	TI	**SN74LS395A**	**1031**
T74LS40	Fairchild	74LS40	
	Hitachi	HD74LS40	
	Motorola	SN74LS40	
	National	DM74LS40	
	Signetics	74LS40	
	TI	**SN74LS40**	**933**
T74LS42	Fairchild	74LS42	
	Hitachi	HD74LS42	
	Motorola	SN74LS42	
	National	DM74LS42	
	Signetics	74LS42	
	TI	**SN74LS42**	**933**
T74LS47	Fairchild	74LS47	
	Hitachi	HD74LS47	
	Motorola	SN74LS47	
	National	DM74LS47	
	TI	**SN74LS47**	**935**
T74LS48	Fairchild	74LS48	
	Hitachi	HD74LS48	
	Motorola	SN74LS48	
	National	DM74LS48	
	Signetics	74LS48	
	TI	**SN74LS48**	**935**
T74LS49	Fairchild	74LS49	
	Hitachi	HD74LS49	
	Motorola	SN74LS49	
	National	DM74LS49	
	TI	**SN74LS49**	**935**
T74LS490	Fairchild	74LS490	
	Motorola	SN74LS490	
	Signetics	74LS490	
	TI	**SN74LS490**	**1043**
T74LS51	Fairchild	74LS51	
	Hitachi	HD74LS51	
	Motorola	SN74LS51	
	National	DM74LS51	
	Signetics	74LS51	
	TI	**SN74LS51**	**936**
T74LS54	Fairchild	74LS54	
	Hitachi	HD74LS54	
	Motorola	SN74LS54	
	National	DM74LS54	
	Signetics	74LS54	
	TI	**SN74LS54**	**938**
T74LS55	Fairchild	74LS55	
	Hitachi	HD74LS55	
	Motorola	SN74LS55	
	National	DM74LS55	
	TI	**SN74LS55**	**939**
T74LS670	Fairchild	74LS670	
	Motorola	SN74LS670	
	National	DM74LS670	
	Signetics	74LS670	
	TI	**SN74LS670**	**1080**
T74LS74	Fairchild	74LS74	
	Hitachi	HD74LS74	
		HD74LS74A	
	Motorola	SN74LS74A	
	National	DM74LS74	
	Signetics	74LS74	
	TI	**SN74LS74A**	**945,946**
T74LS86	Fairchild	74LS86	
	Hitachi	HD74LS86	
	Motorola	SN74LS86	
	National	DM74LS86	
	Signetics	74LS86	
	TI	**SN74LS86**	**950**
T74LS90	Fairchild	74LS90	
	Motorola	SN74LS90	
	National	DM74LS90	
	Signetics	74LS90	
	TI	**SN74LS90**	**952**
T74LS92	Fairchild	74LS92	
	Hitachi	HD74LS92	
	Motorola	SN74LS92	
	National	DM74LS92	
	Signetics	74LS92	
	TI	**SN74LS92**	**952**
T74LS93	Fairchild	74LS93	
	Hitachi	HD74LS93	
	Motorola	SN74LS93	
		(Continued)	
T74LS93	National	DM74LS93	
	Signetics	74LS93	
	TI	**SN74LS93**	**953**
T74LS95B	Fairchild	74LS95B	
	Hitachi	HD74LS95B	
	Motorola	SN74LS95B	
	National	DM74LS95B	
	Signetics	74LS95B	
	TI	**SN74LS95B**	**954**
TBA2002	Fairchild	TDA2002	
	National	LM2002	
		LM383	
	RCA	CA2002	
	Sprague	ULN-3701	
		ULN-3702	
TBA231	**Exar**	**XR4739**	**3378**
	Fairchild	μA739	
		μA749	
	National	LM1303	
	Raytheon	**RC4739**	**3592**
	TI	SN76131	
		SN76149	
TBA800	Fairchild	TBA800	
	Plessey	TBA800	
	Thomson-CSF		
		TBA800	
TBA810	Fairchild	TBA810	
	RCA	CA810	
TBA820	MCE	MCE-820	
	TI	SN76001	
	Thomson-CSF		
		TBA820	
TBA830	Thomson-CSF		
		TBA830	
TCA3089	Hitachi	HA1137	
		HA1230	
	National	CA3089	
		LM3089	
	RCA	CA3089	
	Sanyo	LA1230	
		LA3089	
	SGS	TDA1200	
	Signetics	CA3089	
	Telefunken	U417	
	TI	SN76689	
TCA3189	Sprague	ULN-3889	
TCA830	Telefunken	TCA830	
TCA840	Telefunken	TCA840	
TCA900	Thomson-CSF		
		TCA900	
TDA1170	Fairchild	μA7327	
	Sprague	ULN-2270	
TDA1190	Fairchild	TDA1194	
	Hitachi	HA1364	
	RCA	CA1190	
	SGS	TDA1190Z	
		TDA3190	
	Sprague	ULN-2290	
TDA1190Z	Fairchild	TDA1194	
	Hitachi	HA1364	
	RCA	CA1190	
	SGS	TDA1190	
		TDA3190	
	Sprague	ULN-2290	
TDA1200	Hitachi	HA1137	
		HA1230	
	National	CA3089	
		LM3089	
	RCA	CA3089	
	Sanyo	LA1230	
		LA3089	
	SGS	TCA3089	
	Signetics	CA3089	
	Telefunken	U417	
	TI	SN76689	
TDA2002	Hitachi	TDA2002	
	NEC	μPC2002	
	Telefunken	TDA2002	
TDA2003	Fairchild	TDA2003	
	Sprague	ULN-3703	
TDA2004	RCA	CA2004	
	Sprague	ULN-3702	
TDA2005	NEC	μPC2005	
TDA2140	Telefunken	TDA2140	
TDA2151	Telefunken	TDA2151	
TDA2161	Telefunken	TDA2161	
TDA3190	Fairchild	TDA1194	
	Hitachi	HA1364	
	RCA	CA1190	
	SGS	TDA1190	
		TDA1190Z	
	Sprague	ULN-2290	
TDA440	National	TDA440	
	Plessey	TDA440	
	Telefunken	TDA440	
TDA4420	Telefunken	TDA4420	
TDA4421	Telefunken	TDA4421	
Z8	Zilog	Z8	
Z80-CPU	Mostek	MK3880	
	NEC	μPD780	
	Zilog	**Z80**	**1738**
		Z80-CPU	
Z80-CTC	Mostek	MK3882	
	Zilog	**Z80-CTC**	**1738**
Z80-DART	**Zilog**	**Z80-DART**	**1738**
Z80-DMA	Mostek	MK3883	
	Zilog	**Z80-DMA**	**1738**
Z80-PI	Mostek	MK3881	
	Zilog	**Z80-PIO**	**1738**
Z80-SIO	Mostek	MK3884	
		MK3885	
		MK3887	
	Zilog	**Z80-SIO**	**1738**
Z8000	**Zilog**	**Z8000**	**1741,1756**
Z8001	AMD	Z8001	
	Zilog	**Z8001**	**1741**
Z8002	AMD	Z8002	
	Zilog	**Z8002**	**1741**
Z8010	AMD	Z8010	
	Zilog	Z8010	
Z8036	AMD	Z8036	
	Zilog	Z8036	
Z8038	AMD	Z8038	
	Zilog	Z8038	
Z8060	AMD	Z8060	
	Zilog	Z8060	
Z8090	Zilog	Z8090	
Z8400	Zilog	Z8400	
Z8410	**Zilog**	**Z8410**	**1739**
Z8420	**Zilog**	**Z8420**	**1739**
Z8430	**Zilog**	**Z8430**	**1739**
Z8440	**Zilog**	**Z8440**	**1740**
Z8441	Zilog	Z8441	
Z8442	Zilog	Z8442	
Z8449	Zilog	Z8449	
Z8470	**Zilog**	**Z8470**	**1740**
Z8601	Synertek	Z8601	
	Zilog	**Z8601**	**1753**
Z8602	Synertek	Z8602	
	Zilog	Z8602	
Z8611	Synertek	Z8611	
	Zilog	**Z8611**	**1754**
Z8612	**Zilog**	**Z8612**	**1754**

Si-Fab

Manufacturer Device	Replacement Source	Device	IC Master Page
HCT10H8	**MMI**	**HAL10H8C**	**4776,4782**
	SPI	**SP810H8**	**4826**
	Zytrex	ZX-CAL10H8	
HCT10L8	**MMI**	**HAL10L8C**	**4776,4782**
	SPI	**SP810L8**	**4826**
	Zytrex	ZX-CAL10L8	
HCT12H6	**MMI**	**HAL12H6C**	**4776,4782**
	SPI	**SP812H6**	**4826**
	Zytrex	ZX-CAL12H6C	
HCT12L10	MMI	HAL12L10	
HCT12L6	**MMI**	**HAL12L6C**	**4776,4782**
	SPI	**SP812L6**	**4826**
	Zytrex	ZX-CAL12L6	
HCT14H4	**MMI**	**HAL14H4C**	**4776,4782**
	SPI	**SP814H4**	**4826**
	Zytrex	ZX-CAL-14H4	
HCT14L4	**MMI**	**HAL14L4C**	**4776,4782**
	SPI	**SP814L4**	**4826**
	Zytrex	ZX-CAL14L4	
HCT14L8	MMI	HAL14L8	
HCT16A4	MMI	HAL16A4	
HCT16C1	MMI	HAL16C1	
	SPI	**SP816C1**	**4826**
HCT16H2	MMI	HAL-16H2C	
	SPI	**SP816H2**	**4826**
HCT16L2	**MMI**	**HAL16L2C**	**4776,4782**
	SPI	**SP816L2**	**4826**
HCT16L6	MMI	HAL16L6	
HCT16L8	MMI	C-HAL16L8C	
		HAL16L8C	**4776,4784**
		(Continued)	
HCT16L8	**SPI**	**SP816L8**	**4826**
	Zytrex	ZX-CAL16L8	
HCT16R4	MMI	C-HAL16R4C	
		HAL16R4C	**4776,4784**
	SPI	**SP816R4**	**4826**
	Zytrex	ZX-CAL16R4	
HCT16R6	MMI	C-HAL16R6C	
		HAL16R6C	**4776,4784**
	SPI	**SP816R6**	**4826**
	Zytrex	ZX-CAL16R6	
HCT16X4	MMI	HAL16X4	
HCT18L4	MMI	HAL18L4	
HCT20L10	MMI	HAL20L10	
HCT20L2	MMI	HAL20L2	
HCT20X10	MMI	HAL20X10	
HCT20X4	MMI	HAL20X4	
HCT20X8	MMI	HAL20X8	
MASG-050	MasterLogic	MASG-050	
MASG-100	MasterLogic	MASG-100	
MASG-200	MasterLogic	MASG-200	
MASG-400	MasterLogic	MASG-400	

Siemens

Manufacturer Device	Replacement Source	Device	IC Master Page
GXB10415	**AMD**	**AM10415**	**3909**
	Fairchild	F10415	
	Fujitsu	MBM10415	
		MCM10415	
	Hitachi	HM2110	
		HM2112	
	Motorola	**MCM10146**	**4046**
	National	DM10415	
	Signetics	10415	
HYB4116	AMD	AM9016	
	Fairchild	F4116	
	Hitachi	HM4716	
	Intel	2118	
	Intersil	IM7116	
	ITT	ITT4116	
	Mostek	MK4116	
	Motorola	MCM4116	
	National	MM5290	
	NEC	**μPD416**	**4073**
	Panasonic	MN4116	
	SGS	M4116	
	Signetics	2690	
	TI	TMS4116	
S576A	**LSIComp**	**LS7231**	**803**
S576B	**LSIComp**	**LS7232**	**803**
S576C	**LSIComp**	**LS7233**	**803**
S576D	**LSIComp**	**LS7234**	**803**
SAB1791	Fujitsu	MB8876	
	SMC	FDC1791	
	Synertek	SY1791	
	Western	FD1791	
SAB1793	Fujitsu	MB8877	
	SMC	FDC1793	
	Synertek	SY1793	
	Western	FD1793	
SAB1795	SMC	FDC1795	
	Western	FD1795	
SAB1797	SMC	FDC1797	
	Western	FD1797	
SDA4040	Plessey	SP4040	
SDA4041	Plessey	SP4551	
TBA120	National	TBA120	
	Plessey	TBA120	
	Signetics	TBA120	
	Telefunken	TBA120	
TBA440	National	TBA440	
	Plessey	TBA440	
TCA440	Signetics	TCA440	
TCA4500	Motorola	TCA4500	
	National	LM4500	
TDA2522	National	TDA2522	
	Plessey	TDA2522	
TDA2530	Hitachi	HN462532	
	Motorola	MCM2532	
	National	MM2532	
		NMC2532	
		TDA2530	
		TDA2532	
	Plessey	TDA2530	
	SiliconG	SG2532	
	TI	TMS2532	
	Universal	UM2532	
TDA2560	National	TDA2560	
	Plessey	TDA2560	
	Signetics	TDA2560	
μAA170	TI	μAA170	

◆ Discontinued

Bold face device numbers indicate manufacturers data is provided in the IC Master on the pages noted.

© IC MASTER 1984

Siemens (Cont'd)

Manufacturer Device	Replacement Source	Device	IC Master Page
μAA171	TI	μAA171	

Signetics

Manufacturer Device	Replacement Source	Device	IC Master Page
100101	Fairchild	F100101	
100102	Fairchild	F100102	
100107	Fairchild	F100107	
100114	Fairchild	F100114	
100117	Fairchild	F100117	
100118	Fairchild	F100118	
100122	Fairchild	F100122	
100149	Motorola	100416	
100155	Fairchild	F100155	
100158	Fairchild	F100158	
100160	Fairchild	F100160	
100163	Fairchild	F100163	
100166	Fairchild	F100166	
100171	Fairchild	F100171	
100415	AMD	AM100415	
	Fairchild	100415	
10100	Fairchild	F10100	
	Motorola	MC10100	
10101	Fairchild	F10101	
	Hitachi	HD10101	
	Motorola	MC10101	
10102	Fairchild	F10102	
	Hitachi	HD10102	
	Motorola	MC10102	
10103	Fairchild	F10103	
	Motorola	MC10103	
10104	Fairchild	F10104	
	Hitachi	HD10104	
	Motorola	MC10104	
10105	Fairchild	F10105	
	Hitachi	HD10105	
	Motorola	MC10105	
10106	Fairchild	F10106	
	Hitachi	HD10106	
	Motorola	MC10106	
10107	Fairchild	F10107	
	Hitachi	HD10107	
	Motorola	MC10107	
10109	Fairchild	F10109	
	Hitachi	HD10109	
	Motorola	MC10109	
10110	Fairchild	F10110	
	Hitachi	HD10110	
	Motorola	MC10110	
10111	Fairchild	F10111	
	Hitachi	HD10111	
	Motorola	MC10111	
10113	Fairchild	F10113	
	Motorola	MC10113	
10114	Fairchild	F10114	
	Motorola	MC10114	
10115	Fairchild	F10115	
	Motorola	MC10115	
10116	Fairchild	F10116	
	Hitachi	HD10116	
	Motorola	MC10116	
	National	DM10116	
10117	Fairchild	F10117	
	Hitachi	HD10117	
	Motorola	MC10117	
10118	Fairchild	F10118	
	Hitachi	HD10118	
	Motorola	MC10118	
10119	Fairchild	F10119	
	Hitachi	HD10119	
	Motorola	MC10119	
10121	Fairchild	F10121	
	Hitachi	HD10121	
	Motorola	MC10121	
10123	Fairchild	F10123	
	Motorola	MC10123	
10124	Fairchild	F10124	
	Hitachi	HD10124	
	Motorola	MC10124	
10125	Fairchild	F10125	
	Hitachi	HD10125	
	Motorola	MC10125	
10128	Motorola	MC10128	
10129	Motorola	MC10129	
10130	Fairchild	F10130	
	Hitachi	HD10130	
	Motorola	MC10130	
10131	Fairchild	F10131	
	Hitachi	HD10131	
	Motorola	MC10131	
10132	Fairchild	F10132	
	Hitachi	HD10132	
	Motorola	MC10132	
10133	Fairchild	F10133	
	Hitachi	HD10133	
	Motorola	MC10133	
10134	Fairchild	F10134	
	Hitachi	HD10134	
	Motorola	MC10134	
10135	Fairchild	F10135	
	Motorola	MC10135	
10136	Fairchild	F10136	
	Hitachi	HD10136	
	Motorola	MC10136	
10137	Fairchild	F10137	
	Motorola	MC10137	
10138	Motorola	MC10138	
10139	Motorola	MCM10139	4047
10140	TI	SN10140	
10141	Fairchild	F10141	
	Motorola	MC10141	
10144	Fairchild	F10144	
	Motorola	MCM10144	4046
	TI	SN10144	
10145	Fairchild	F10145A	
	Motorola	MCM10145	4046
10148	Hitachi	HD10148	
	Motorola	MCM10148	4046
	NEC	μPB10148	
	TI	SN10148	
10149	Fairchild	F10416	
	Motorola	MCM10149	4047
10158	Fairchild	F10158	
	Motorola	MC10158	
10159	Fairchild	F10159	
	Motorola	MC10159	
10160	Fairchild	F10160	
	Hitachi	HD10160	
	Motorola	MC10160	
10161	Fairchild	F10161	
	Hitachi	HD10161	
	Motorola	MC10161	
	NEC	μPB10161	
10162	Fairchild	F10162	
	Hitachi	HD10162	
	Motorola	MC10162	
10164	Fairchild	F10164	
	Hitachi	HD10164	
	Motorola	MC10164	
	TI	SN10164	
10165	Fairchild	F10165	
	Hitachi	HD10165	
	Motorola	MC10165	
10170	Motorola	MC10170	
10171	Fairchild	F10171	
	Motorola	MC10171	
10172	Fairchild	F10172	
	Motorola	MC10172	
10173	Fairchild	F10173	
	Motorola	MC10173	
10174	Fairchild	F10174	
	Hitachi	HD10174	
	Motorola	MC10174	
	TI	SN10174	
10175	Fairchild	F10175	
	Hitachi	HD10175	
	Motorola	MC10175	
	TI	SN10175	
10176	Fairchild	F10176	
	Motorola	MC10176	
10178	Fairchild	F10178	
	Motorola	MC10178	
10179	Fairchild	F10179	
	Hitachi	HD10179	
	Motorola	MC10179	
10180	Fairchild	F10180	
	Hitachi	HD10180	
	Motorola	MC10180	
10181	Fairchild	F10181	
	Hitachi	HD10181	
	Motorola	MC10181	
10186	Fairchild	F10186	
	Motorola	MC10186	
10188	Motorola	MC10188	
10189	Motorola	MC10189	
10190	Motorola	MC10190	
10191	Motorola	MC10191	
10192	Fairchild	F10192	
	Motorola	MC10192	
10195	Motorola	MC10195	
10210	Fairchild	F10210	
	Motorola	MC10210	
10211	Fairchild	F10211	
	Motorola	MC10211	
10212	Fairchild	F10212	
	Motorola	MC10212	
10216	Fairchild	F10216	
	Motorola	MC10216	
10231	Fairchild	F10231	
	Motorola	MC10231	
10415	AMD	AM10415	3909
	Fairchild	F10415	
	Fujitsu	MBM10415	
		MCM10415	
	Hitachi	HM2110	
		HM2112	
	Motorola	MCM10146	4046
	National	DM10415	
	Siemens	GXB10415	
10422	Fairchild	F10422	
	Fujitsu	MBM10422	
	Hitachi	HM10422	
	Motorola	MCM10422	4047
	National	DM10422	
10470	AMD	AM10470	
	Fairchild	F10470	
	Fujitsu	MBM10470	
	Hitachi	HM10470	
		HM2142	
	Motorola	MCM10470	4047
	National	DM10470	
10474	AMD	AM10474	
	Fairchild	F10474	
	Fujitsu	MBM10474	
2064-20	AMD	AM92640	
	AMI	S68B364	3933
	Fairchild	F3564-25	1465
	GTEMicro	G5364	
	Mostek	MK36000-4	
	Motorola	MCM67365-25	
	NEC	μPD2/8364-20	
		μPD23/8364-20	
	Synertek	SY2364-2	
23128	NEC	μPD23128	4106
	VTI	VT23128	4252
23128-30	AMD	AM92128	
	AMI	S23128	3935
	GI	R09128	
	Hitachi	HN613128	
	Motorola	MCM63128	
	National	S2128	
	NCR	NCR23128	
	NEC	μPD2/83128	
		μPD23/83128	
	OKI	MSM38128	4118
	Synertek	SY23128	
	VTI	VT23128	4252
23256	AMD	AM92256	
	Fujitsu	MB83256	
	GI	R09256	
	Hitachi	HN613256	
	MicroPwr	MP2326	
	Mostek	MK38000	
	Motorola	MCM63256	
	NCR	23256	
	NEC	μPD2/83256	
		μPD23/83256	
	SMOS	SMM2326	
	Synertek	SY23256	
	Toshiba	TMM23256	
2332	AMD	AM9233	
	AMI	S2333	3932
	Fairchild	F3533	
	GI	R09433	
	Intel	2332	
	NCR	2333	
		NCR2333	
	RCA	CDM5332	1593
	SSS	SCM23C33	
	Synertek	SY2333	4211
	Universal	UM2333-45	
	VTI	VT2333	4249
2364	NCR	2365	
	NEC	μPD2364	
	Rockwell	R2364	
	Synertek	SY2365	4211
	VTI	VT2365	4251
2364-20	AMD	AM9265	
	GI	R09864	
	GTEMicro	G5365	
	Hitachi	HN61364	
	Mostek	MK37000	
	RCA	CDM5365	
	Synertek	SY2365	4211
2364-20	Toshiba	TMM2365	
	VTI	VT2365	4251
2664A	AMI	S68364	
	GI	R09464	
	GTEMicro	G5364	
	Intersil	IM7364	
	MicroPwr	MP2364	
	Mitsubishi	M5L2364	
	Mostek	MK36000	
	Motorola	MCM68364	4048,4054
	National	MM5235	
	NCR	NCR2364	
	RCA	CDM5364	1593
	SMOS	SMM2364	
	SGS	M36000	
	SSS	SCM23C64	
		SCM23C65	
	SMC	ROM36000	
	Synertek	SY2364	4211
	TI	TMS4764	4225
	Toshiba	TM2364	
	VTI	VT2364	4250
2664A-30	AMD	AM9264	
	AMI	S4264	
		S68A364	3933
	GTEMicro	2364-3	
	Hitachi	HN48364	
	Mostek	MK36000-5	
	Motorola	MCM68365	
		MCM68366	
	National	MM52164	
	NCR	2364	
	NEC	UPD2/8364-30	
		μPD23/8364-30	
	OKI	MSM2965	
	Synertek	SY2364-3	4211
	Toshiba	TMM2364	
	Weitek	SC8164	
2681	Motorola	MC2681	
2682	Motorola	MC2682	
2690	AMD	AM9016	
	Fairchild	F4116	
	Hitachi	HM4716	
	Intel	2118	
	Intersil	IM7116	
	ITT	ITT4116	
	Mostek	MK4116	
	Motorola	MCM4116	
	National	MM5290	
	NEC	μPD416	4073
	Panasonic	MN4116	
	SGS	M4116	
	Siemens	HYB4116	
	TI	TMS4116	
26S64	SGS	M2362	
	Synertek	2364B	
3001	Intel	3001	
3002	Intel	3002	
3101	AMD	31L01	
		AM27LS02	
		AM27S02	
		AM3101	
		AM3101A	
		SN7489-1	
	Fairchild	74S289	
	Intel	3101	
	Motorola	MC4064	
	National	DM7589	
	NEC	μPB2089	
		μPB2289	
	Signetics	3101A	
		7489	
		N8225	
		S3101	
	TI	SN7489	951
3101A	AMD	31L01	
		AM27LS02	
		AM27S02	
		AM3101	
		AM3101A	
		SN7489-1	
	Fairchild	74S289	
	Intel	3101	
	Motorola	MC4064	
	National	DM7589	
	NEC	μPB2089	
		μPB2289	
	Signetics	3101	
		7489	
		N8225	

(Continued)

(Continued)

◆ Discontinued

The manufacturers report their devices can be used as direct replacements.
Performance details often differ, so compare the specifications considering your requirements.

Signetics (Cont'd)

Manufacturer Device	Replacement Source	Device	IC Master Page
3101A	Signetics	S3101	
	TI	**SN7489**	**951**
5400	Fairchild	5400	
	National	DM5400	
	TI	**SN5400**	**920**
54109	National	DM54109	
	TI	**SN54109**	**958**
5411	Fairchild	5411	
	National	DM5411	
	TI	SN5411	
54116	TI	**SN54116**	**960**
54121	Fairchild	54121	
		9603	
	National	DM54121	
	TI	**SN54121**	**961**
54123	Fairchild	54123	
	National	DM54123	
	TI	**SN54123**	**962**
54126	Fairchild	54126	
	National	DM54126	
		DM7094	
	TI	**SN54126**	**963**
		SN54426	**1034**
54132	Fairchild	54132	
	National	DM54132	
	TI	**SN54132**	**965**
5414	Fairchild	5414	
	National	DM5414	
	TI	**SN5414**	**924**
54141	Fairchild	9315	
	National	DM54141	
	TI	SN54141	
54147	National	DM54147	
	TI	**SN54147**	**970**
54148	National	DM54148	
		DM9318	
	TI	**SN54148**	**971**
54151	Fairchild	54151A	
	National	DM54151	
	TI	SN54151	
		SN54151A	**972**
54153	Fairchild	54153	
	National	DM54153	
	TI	**SN54153**	**972**
54157	Fairchild	54157	
	National	DM54157	
	TI	**SN54157**	**975**
54160	Fairchild	54160	
		9310	
	National	DM54160	
	Raytheon	RM9310	
	TI	**SN54160**	**977**
54161	Fairchild	54161	
	National	DM54161	
	TI	**SN54161**	**977**
54163	Fairchild	54163	
	National	DM54163	
	TI	**SN54163**	**978**
54164	Fairchild	54164	
	National	DM54164	
		DM7570	
	TI	**SN54164**	**979**
54165	Fairchild	54165	
	National	DM54165	
		DM7590	
	TI	**SN54165**	**979**
54166	Fairchild	54166	
	National	DM54166	
	TI	**SN54166**	**979**
54174	Fairchild	54174	
	National	DM54174	
	TI	**SN54174**	**983**
54175	Fairchild	54175	
	National	DM54175	
	TI	**SN54175**	**983**
54176	Fairchild	54176	
	National	DM54176	
	Raytheon	RM8280	
	Signetics	S8280	
	TI	**SN54176**	**984**
54177	Fairchild	54177	
	National	DM54177	
		DM7281	
	Raytheon	RM8281	
	Signetics	S7281	
		S8281	
	TI	**SN54177**	**984**
54180	Fairchild	54180	
	National	DM54180	
	TI	**SN54180**	**985**
54181	Fairchild	54181	
	National	DM54181	
	Raytheon	RM9341	
	TI	**SN54181**	**985**
54190	Fairchild	54190	
	National	DM54190	
	TI	**SN54190**	**989**
54191	Fairchild	54191	
	National	DM54191	
	TI	**SN54191**	**989**
54194	National	DM54194	
	TI	**SN54194**	**990**
54196	Fairchild	54196	
	National	DM54196	
	TI	**SN54196**	**991**
5420	Fairchild	5420	
	National	DM5420	
	TI	**SN5420**	**926**
5426	National	DM5426	
	TI	**SN5426**	**928**
54279	Fairchild	54279	
	TI	**SN54279**	**1009**
5432	Fairchild	5432	
	National	DM5432	
	TI	**SN5432**	**930**
5442	Fairchild	5442A	
	National	DM5442	
	TI	SN5442	
5443	Fairchild	5443A	
	TI	SN5443	
5446	Fairchild	5446A	
		9317B	
		9317C	
	National	DM5446	
	TI	SN5446	
		SN5446A	**935**
5447	Fairchild	5447A	
	National	DM5447	
	TI	SN5447	
		SN5447A	**935**
5473	Fairchild	5473	
	National	DM5473	
	TI	**SN5473**	**944**
5474	Fairchild	5474	
	National	DM5474	
	TI	SN5474	
5475	Fairchild	5475	
	National	DM5475	
	TI	**SN5475**	**946**
5476	Fairchild	5476	
	National	DM5476	
	TI	**SN5476**	**946**
5477	Fairchild	5477	
	TI	**SN5477**	**947**
5483A	Fairchild	5483A	
	TI	**SN5483A**	**949**
5485	Fairchild	5485	
	National	DM5485	
	TI	**SN5485**	**950**
5486	Fairchild	5486	
	National	DM5486	
	TI	**SN5486**	**950**
5491	Fairchild	5491A	
	National	DM5491	
	TI	SN5491	
		SN5491A	**952**
5493	Fairchild	5493A	
	National	DM5493	
	TI	SN5493	
		SN5493A	**953**
5496	Fairchild	5496	
	National	DM5496	
	TI	**SN5496**	**954**
54F00	Fairchild	54F00	
	Motorola	**MC54F00**	**822**
54F02	Fairchild	54F02	
	Motorola	**MC54F02**	**822**
54F04	Fairchild	54F04	
	Motorola	**MC54F04**	**822**
54F08	Fairchild	54F08	
	Motorola	**MC54F08**	**822**
54F10	Fairchild	54F10	
	Motorola	**MC54F10**	**822**
54F109	Fairchild	54F109	
	Motorola	**MC54F109**	**822**
54F11	Fairchild	54F11	
	Motorola	**MC54F11**	**822**
54F138	Fairchild	54F138	
	Motorola	**MC54F138**	**822**
54F139	Fairchild	54F139	
	Motorola	**MC54F139**	**822**
54F20	Fairchild	54F20	
	Motorola	**MC54F20**	**822**
54F240	**Fairchild**	**54F240**	**729**
	Motorola	**MC54F240**	**822**
54F241	**Fairchild**	**54F241**	**729**
	Motorola	**MC54F241**	**822**
54F242	Fairchild	54F242	
	Motorola	**MC54F242**	**822**
54F243	Fairchild	54F243	
	Motorola	**MC54F243**	**822**
54F244	**Fairchild**	**54F244**	**729**
	Motorola	**MC54F244**	**822**
54F32	Fairchild	54F32	
	Motorola	**MC54F32**	**822**
54F333	Fairchild	54F333	
	Motorola	MC54F333	
54F373	**Fairchild**	**54F373**	**734**
	Motorola	**MC54F373**	**822**
54F374	**Fairchild**	**54F374**	**736**
	Motorola	**MC54F374**	**822**
54F534	Fairchild	54F534	
	Motorola	**MC54F534**	**822**
54F74	Fairchild	54F74	
	Motorola	**MC54F74**	**822**
54LS00	Fairchild	54LS00	
	Motorola	**SN54LS00**	**822**
	National	DM54LS00	
	TI	**SN54LS00**	**920**
54LS02	Fairchild	54LS02	
	~~Motorola~~	~~SN54LS02~~	~~822~~
	National	DM54LS02	
	TI	**SN54LS02**	**920**
54LS04	Fairchild	54LS04	
	Motorola	**SN54LS04**	**822**
	National	DM54LS04	
	TI	**SN54LS04**	**921**
54LS08	Fairchild	54LS08	
	Motorola	**SN54LS08**	**822**
	National	DM54LS08	
	TI	**SN54LS08**	**922**
54LS10	Fairchild	54LS10	
	Motorola	**SN54LS10**	**822**
	National	DM54LS10	
	TI	**SN54LS10**	**923**
54LS109	Fairchild	54LS109	
	Motorola	SN54LS109A	
	National	DM54LS109	
		DM54LS109A	
	TI	SN54LS109	
		SN54LS109A	**958**
54LS112	Fairchild	54LS112	
	Motorola	SN54LS112A	
	National	DM54LS112	
	TI	SN54LS112	
		SN54LS112A	**959**
54LS113	Fairchild	54LS113	
	Motorola	SN54LS113A	
	National	DM54LS113	
	TI	SN54LS113	
		SN54LS113A	
54LS125A	Motorola	SN54LS125A	
	National	DM54LS125	
	TI	**SN54LS125A**	**962**
54LS126A	Fairchild	54LS126	
	Motorola	SN54LS126A	
	National	DM54LS126	
	TI	SN54LS126	
		SN54LS126A	**962**
54LS132	Motorola	SN54LS132	
	National	DM54LS132	
	TI	**SN54LS132**	**965**
54LS136	Fairchild	54LS136	
	Motorola	SN54LS136	
	National	DM54LS136	
	TI	**SN54LS136**	**966**
54LS138	Fairchild	54LS138	
	Motorola	SN54LS138	
	National	DM54LS138	
	TI	**SN54LS138**	**968**
54LS139	Fairchild	54LS139	
	Motorola	SN54LS139	
	National	DM54LS139	
	TI	**SN54LS139**	**968**
54LS14	Fairchild	54LS14	
	Motorola	SN54LS14	
	National	DM54LS14	
	TI	**SN54LS14**	**924**
54LS151	Fairchild	54LS151	
	Motorola	SN54LS151	
	National	DM54LS151	
	TI	**SN54LS151**	**972**
54LS153	Fairchild	54LS153	
	Motorola	SN54LS153	
	National	DM54LS153	
	TI	**SN54LS153**	**972**
54LS154	National	DM54LS154	
54LS157	Fairchild	54LS157	
	Motorola	SN54LS157	
	National	DM54LS157	
	TI	**SN54LS157**	**975**
54LS158	Fairchild	54LS158	
	Motorola	SN54LS158	
	National	DM54LS158	
	TI	**SN54LS158**	**975**
54LS160	**AMD**	**SM74S160**	**1427**
	Fairchild	93S10	
	National	DM54LS160	
54LS160A	Motorola	SN54LS160A	
	TI	**SN54LS160A**	**977**
54LS161A	Fairchild	54LS161A	
	Motorola	SN54LS161A	
	National	DM54LS161A	
	TI	**SN54LS161A**	**977**
54LS162A	Motorola	SN54LS162A	
	National	DM54LS162A	
	TI	**SN54LS162A**	**978**
54LS163A	Motorola	SN54LS163A	
	National	DM54LS163A	
	TI	**SN54LS163A**	**978**
54LS164	Fairchild	54LS164	
	Motorola	SN54LS164	
	National	DM54LS164	
	TI	**SN54LS164**	**979**
54LS173	Fairchild	54LS173	
	Motorola	SN54LS173A	
	National	DM54LS173	
	TI	**SN54LS173A**	**982**
54LS174	Fairchild	54LS174	
	Motorola	SN54LS174	
	National	DM54LS174	
	TI	**SN54LS174**	**983**
54LS175	Fairchild	54LS175	
	Motorola	SN54LS175	
	National	DM54LS175	
	TI	**SN54LS175**	**983**
54LS181	Fairchild	54LS181	
	Motorola	SN54LS181	
	TI	**SN54LS181**	**985**
54LS190	Motorola	SN54LS190	
	National	DM54LS190	
	TI	**SN54LS190**	**989**
54LS191	Motorola	SN54LS191	
	National	DM54LS191	
	TI	**SN54LS191**	**989**
54LS192	Fairchild	54LS192	
	Motorola	SN54LS192	
	National	DM54LS192	
	Raytheon	54LS192	
	TI	**SN54LS192**	**990**
54LS193	Fairchild	54LS193	
	Motorola	SN54LS193	
	National	DM54LS193	
	TI	**SN54LS193**	**990**
54LS194A	Fairchild	54LS28	
	Motorola	SN54LS28	
	Signetics	54LS28	
	TI	**SN54LS28**	**929**
54LS195A	Fairchild	54LS195A	
	Motorola	SN54LS195A	
	TI	**SN54LS195A**	**991**
54LS197	Motorola	SN54LS197	
	National	DM54LS197	
	TI	**SN54LS197**	**992**
54LS20	Fairchild	54LS20	
	Motorola	SN54LS20	
	National	DM54LS20	
	TI	**SN54LS20**	**926**
54LS221	Motorola	SN54LS221	
	National	DM54LS221	
	TI	**SN54LS221**	**994**
54LS245	Fairchild	54LS245	
	MMI	**SN54LS245**	**804**
	Motorola	SN54LS245	
	National	DM54LS245	
	TI	SN54LS245	
54LS248	Fairchild	54LS248	
	Motorola	SN54LS248	
	National	DM54LS248	
	TI	**SN54LS248**	**1002**
54LS251	Fairchild	54LS251	
	Motorola	SN54LS251	
	TI	**SN54LS251**	**1003**

◆ Discontinued

Bold face device numbers indicate manufacturers data is provided in the IC Master on the pages noted.

© IC MASTER 1984

Signetics (Cont'd)

Manufacturer Device	Replacement Source	Device	IC Master Page
54LS253	Fairchild	54LS253	
	Motorola	SN54LS253	
	National	DM54LS253	
		DM7214	
	TI	**SN54LS253**	**1003**
54LS257	National	DM54LS257	
	TI	SN54LS257	
54LS258	National	DM54LS258	
	TI	SN54LS258	
54LS260A	Fairchild	54LS260	
	Motorola	SN54LS260A	
54LS266	Fairchild	54LS266	
		9386	
	Motorola	SN54LS266	
	National	DM54LS266	
	TI	**SN54LS266**	**1007**
54LS273	AMD	AM25LS273M	
	Fairchild	54LS273	
	MMI	**SN54LS273**	**804**
	Motorola	SN54LS273	
	TI	**SN54LS273**	**1007**
54LS279	Fairchild	54LS279	
	Motorola	SN54LS279	
	National	DM54LS279	
	TI	**SN54LS279**	**1009**
54LS28	Fairchild	54LS28	
	Motorola	SN54LS28	
	Signetics	**54LS194A**	**530**
	TI	**SN54LS28**	**929**
54LS283	Fairchild	54LS283	
	Motorola	SN54LS283	
	National	DM54LS283	
	TI	**SN54LS283**	**1011**
54LS290	Motorola	SN54LS290	
	National	DM54LS290	
	TI	**SN54LS290**	**1012**
54LS293	Fairchild	54LS293	
	Motorola	SN54LS293	
	National	DM54LS293	
	TI	**SN54LS293**	**1014**
54LS30	Fairchild	54LS30	
	Motorola	SN54LS30	
	National	DM54LS30	
	TI	**SN54LS30**	**929**
54LS32	Fairchild	54LS32	
	National	DM54LS32	
	TI	**SN54LS32**	**930**
54LS365	Fairchild	54LS365A	
	Motorola	SN54LS365A	
	Signetics	**54LS365A**	**530**
	TI	SN54LS265A	
		SN54LS365A	**1023**
54LS365A	Fairchild	54LS365A	
	Motorola	SN54LS365A	
	Signetics	54LS365	
	TI	SN54LS265A	
		SN54LS365A	**1023**
54LS366A	Fairchild	54LS366A	
	Motorola	SN54LS366A	
	National	DM54LS366	
	TI	**SN54LS366A**	**1023**
54LS367	Fairchild	54LS367A	
	Motorola	SN54LS367A	
	National	DM54LS367	
	Signetics	**54LS367A**	**530**
	TI	**SN54LS367A**	**1024**
54LS367A	Fairchild	54LS367A	
	Motorola	SN54LS367A	
	National	DM54LS367	
	Signetics	54LS367	
	TI	**SN54LS367A**	**1024**
54LS368	Fairchild	54LS368A	
	Motorola	SN54LS368A	
	National	DM54LS368	
	Signetics	**54LS368A**	**530**
	TI	**SN54LS368A**	**1024**
54LS368A	Fairchild	54LS368A	
	Motorola	SN54LS368A	
	National	DM54LS368	
	Signetics	54LS368	
	TI	**SN54LS368A**	**1024**
54LS37	Fairchild	54LS37	
	Motorola	SN54LS37	
	National	DM54LS37	
	TI	**SN54LS37**	**932**
54LS373	**MMI**	**SN54LS373**	**804**
	Motorola	SN54LS373	
	TI	**SN54LS373**	**1025**
54LS375	Fairchild	54LS375	
	Motorola	SN54LS375	
	TI	**SN54LS375**	**1026**
54LS377	AMD	AM25LS377M	
	Fairchild	54LS377	
	MMI	**SN54LS377**	**804**
	Motorola	SN54LS377	
	TI	**SN54LS377**	**1027**
54LS395	Motorola	SN54LS395	
	National	DM54LS395	
	TI	SN54LS395	
		SN54LS395A	**1031**
54LS42	Fairchild	54LS42	
	Motorola	SN54LS42	
	National	DM54LS42	
	TI	**SN54LS42**	**933**
54LS51	Fairchild	54LS51	
	Motorola	SN54LS51	
	National	DM54LS51	
	TI	**SN54LS51**	**936**
54LS670	Fairchild	54LS670	
	Motorola	SN54LS670	
	National	DM54LS670	
	TI	**SN54LS670**	**1080**
54LS73	Motorola	SN54LS73A	
	National	DM54LS73	
		DM54LS73A	
	TI	SN54LS73	
		SN54LS73A	**944**
54LS74	Fairchild	54LS74	
	Motorola	SN54LS74A	
	National	DM54LS74	
		DM54LS74A	
	TI	SN54LS74	
		SN54LS74A	**945,946**
54LS75	Motorola	SN54LS75	
	National	DM54LS75	
	TI	SN54LS75	
54LS76	Motorola	SN54LS76A	
	National	DM54LS76	
	TI	SN54LS76	
		SN54LS76A	**946**
54LS83	Fairchild	54LS83A	
	Motorola	SN54LS83A	
	National	DM54LS83A	
	Signetics	54LS83A	
	TI	**SN54LS83A**	**949**
54LS83A	Fairchild	54LS83A	
	Motorola	SN54LS83A	
	National	DM54LS83A	
	Signetics	54LS83	
	TI	**SN54LS83A**	**949**
54LS85	Fairchild	54LS85	
	Motorola	SN54LS85	
	National	DM54LS85	
	TI	**SN54LS85**	**950**
54LS86	Motorola	SN54LS86	
	National	DM54LS86	
	TI	**SN54LS86**	**950**
54LS89	Motorola	SN54LS89	
54LS90	Motorola	SN54LS90	
	National	DM54LS90	
	TI	**SN54LS90**	**952**
54LS92	Motorola	SN54LS92	
	National	DM54LS92	
	TI	**SN54LS92**	**952**
54LS93	Fairchild	54LS93	
	Motorola	SN54LS93	
	National	DM54LS93	
	TI	**SN54LS93**	**953**
54LS95B	Fairchild	54LS95B	
	Motorola	SN54LS95B	
	National	DM54LS95B	
	TI	**SN54LS95B**	**954**
54LS96	**TI**	**SN54LS96**	**954**
54S00	Fairchild	54S00	
	TI	**SN54S00**	**920**
54S02	Fairchild	54S02	
	TI	**SN54S02**	**920**
54S04	**TI**	**SN54S04**	**921**
54S08	Fairchild	54S08	
	TI	**SN54S08**	**921**
54S11	Fairchild	54S11	
	TI	SN54S11	
54S139	AMD	SN54S139	
	Fairchild	54S139	
	TI	**SN54S139**	**968**
54S140	Fairchild	54S140	
	National	DM54S140	
	TI	**SN54S140**	**969**
54S151	AMD	SN54S151	
	Fairchild	54S151	
	TI	**SN54S151**	**972**
54S153	AMD	SN54S153	
	Fairchild	54S153	
	TI	**SN54S153**	**972**
54S157	AMD	SN54S157	
	Fairchild	54S157	
	TI	**SN54S157**	**975**
54S158	AMD	SN54S158	
	Fairchild	54S158	
	TI	**SN54S158**	**975**
54S181	AMD	SN54S181	
	Fairchild	93S41M	
	TI	**SN54S181**	**985**
54S189	AMD	SN54S189	
	Fairchild	54S189	
	National	DM54S189	
	TI	SN54S189	
54S200	National	DM54S200	
	Signetics	54S201	
		S82S116	
		S82S16	**532**
	TI	SN54S201	
54S201	National	DM54S200	
	Signetics	54S200	
		S82S116	
		S82S16	**532**
	TI	SN54S201	
54S251	AMD	SN54S251	
	TI	**SN54S251**	**1003**
54S253	AMD	SN54S253	
	Fairchild	54S253	
54S257	AMD	SN54S257	
	TI	**SN54S257**	**1004**
54S258	AMD	SN54S258	
	Fairchild	54S258	
	TI	**SN54S258**	**1005**
54S260	Fairchild	54S260	
	TI	**SN54S260**	**1006**
54S289	AMD	SN5489-1	
		SN54S289	
		SN74S289	
	Fairchild	54S289	
	National	DM5489	
		DM54S289	
		MM54S289	
	Signetics	**54S301**	**532**
		S8225	
		S82S25	
	TI	SN5489	
		SN54S289	
54S301	AMD	SN5489-1	
		SN54S289	
		SN74S289	
	Fairchild	54S289	
	National	DM5489	
		DM54S289	
		MM54S289	
	Signetics	54S289	
		S8225	
		S82S25	
	TI	SN5489	
		SN54S289	
54S37	**TI**	**SN54S37**	**932**
54S534	MMI	54S534	
54S85	**TI**	**SN54S85**	**950**
54S86	Fairchild	54S86	
	TI	**SN54S86**	**950**
55325	Fairchild	MC55325	
	Motorola	MC55325	
	National	DS55325	
		LM55325	
	SiliconG	SG55325	
	TI	SN55325	
55450	Fairchild	55450	
	SiliconG	SG55450	
	TI	SN55450	
55451	Fairchild	55451	
	National	DS55451	
	SiliconG	SG55451	
	TI	SN55451	
55452	Fairchild	55452	
	National	DS55452	
	SiliconG	SG55452	
	TI	SN55452	
55453	Fairchild	55453	
	National	DS55453	
		LM55453	
	SiliconG	SG55453	
	TI	SN55453	
55454	National	DS55454	
	SiliconG	SG55454	
	TI	SN55454	
68682	Motorola	MC68682	
7400	Fairchild	7400	
	Hitachi	HD7400	
	National	DM7400	
	TI	**SN7400**	**920**
	Toshiba	TC7400	
7402	Fairchild	7402	
	Hitachi	HD7402	
	National	DM7402	
	TI	**SN7402**	**920**
7403	Fairchild	7403	
	Hitachi	HD7403	
	National	DM7403	
	TI	**SN7403**	**921**
7404	Fairchild	7404	
	Hitachi	HD7404	
	National	DM7404	
	TI	**SN7404**	**921**
	Toshiba	TC7404	
7405	Fairchild	7405	
	Hitachi	HD7405	
	National	DM7405	
	TI	**SN7405**	**921**
7406	Fairchild	7406	
	Hitachi	HD7406	
	National	DM7406	
	TI	**SN7406**	**922**
7407	Fairchild	7407	
	Hitachi	HD7407	
	National	DM7407	
	TI	**SN7407**	**922**
7408	Fairchild	7408	
	Hitachi	HD7408	
	National	DM7408	
	TI	**SN7408**	**922**
7410	Fairchild	7410	
	Hitachi	HD7410	
	National	DM7410	
	TI	**SN7410**	**923**
	Toshiba	TC7410	
74107	Fairchild	74107	
	Hitachi	HD74107	
	National	DM74107	
	TI	**SN74107**	**957**
74109	National	DM74109	
	TI	**SN74109**	**958**
7411	Fairchild	7411	
	Hitachi	HD7411	
	National	DM7411	
74116	**TI**	**SN74116**	**960**
74121	Fairchild	74121	
	Hitachi	HD74121	
	National	DM74121	
	TI	**SN74121**	**961**
74123	Fairchild	74123	
	National	DM74123	
	TI	**SN74123**	**962**
74125	Fairchild	74125	
	Hitachi	HD74125	
	National	DM74125	
		DM8093	
	TI	**SN74125**	**963**
		SN74425	**1034**
74126	Fairchild	74126	
	Hitachi	HD74126	
	National	DM74126	
		DM8094	
	TI	**SN74126**	**963**
		SN74426	**1034**
74128	**TI**	**SN74128**	**964**
7413	Fairchild	7413	
	Hitachi	HD7413	
	National	DM7413	
	TI	**SN7413**	**924**
74132	Fairchild	74132	
	Hitachi	HD74132	
	National	DM74132	
	TI	**SN74132**	**965**
7414	Fairchild	7414	
	Hitachi	HD7414	
	National	DM7414	
	TI	**SN7414**	**924**
74141	Fairchild	74141	
		93141	
	Hitachi	HD74141	
		HD7441	
	National	DM74141	
		DM7441	

(Continued)

◆ Discontinued

The manufacturers report their devices can be used as direct replacements.
Performance details often differ, so compare the specifications considering your requirements.

Signetics (Cont'd)

Manufacturer Device	Replacement Source	Device	IC Master Page
74141	Signetics	7441	
	TI	SN74141	
74145	Fairchild	74145	
	Hitachi	HD74145	
	National	DM74145	
	TI	**SN74145**	**970**
74147	Hitachi	HD14508	
		HD74147	
	Motorola	MC14508	
	National	DM74147	
	RCA	CD4508	
	SGS	HCF4508	
	Signetics	HEF4508	
		N82147	
	SSS	SCL4508	
	Solitron	CM4508	
	TI	**SN74147**	**970**
	Toshiba	TC4508	
74148	Fairchild	9318	
	Hitachi	HD74148	
	National	DM74148	
		DM8318	
	Signetics	N82148	
	TI	**SN74148**	**971**
74150	Fairchild	74150	
	Hitachi	HD74150	
	National	DM74150	
	TI	**SN74150**	**971**
74151	Fairchild	74151	
	Hitachi	HD74151	
	National	DM74151	
	TI	SN74151	
		SN74151A	**972**
74153	Fairchild	74153	
	Hitachi	HD74153	
	National	DM74153	
	TI	**SN74153**	**972**
74155	Fairchild	74155	
	National	DM74155	
	TI	**SN74155**	**974**
74156	Fairchild	74156	
	Hitachi	HD74156	
	National	DM74156	
	TI	**SN74156**	**974**
74157	Hitachi	HD74157	
	National	DM74157	
	TI	**SN74157**	**975**
7416	Fairchild	7416	
	Hitachi	HD7416	
	National	DM7416	
	TI	**SN7416**	**925**
74160	Fairchild	74160	
	Hitachi	HD74160	
	National	DM74160	
	TI	**SN74160**	**977**
74161	Fairchild	74161	
	Hitachi	HD74161	
	National	DM74161	
	TI	**SN74161**	**977**
74163	Fairchild	74163	
	Hitachi	HD74163	
	National	DM74163	
	TI	**SN74163**	**978**
74164	AMD	SN74164	
	Fairchild	74164	
	Hitachi	HD74164	
	National	DM74164	
		DM8570	
		DM8579	
	TI	**SN74164**	**979**
74165	Fairchild	74165	
	National	DM74165	
		DM8590	
	TI	**SN74165**	**979**
74166	Fairchild	74166	
	Hitachi	HD74166	
	National	DM74166	
	TI	**SN74166**	**979**
7417	Fairchild	7417	
	Hitachi	HD7417	
	National	DM7417	
	TI	**SN7417**	**925**
74170	~~Fairchild~~	74170	
	Hitachi	HD74170	
	National	DM74170	
	TI	**SN74170**	**981**
74172	**TI**	**SN74172**	**982**
74174	Fairchild	74174	
	Hitachi	HD74174	
		(Continued)	

Manufacturer Device	Replacement Source	Device	IC Master Page
74174	National	DM74174	
	TI	**SN74174**	**983**
74175	Fairchild	74175	
	Hitachi	HD74175	
	National	DM74175	
	TI	**SN74175**	**983**
74176	Fairchild	74176	
		96176	
	National	DM74176	
		DM8280	
	Raytheon	RC8280	
	Signetics	N8280	
	TI	**SN74176**	**984**
74177	Fairchild	74177	
	National	DM74177	
		DM8281	
	Raytheon	RC8281	
	Signetics	N8281	
	TI	**SN74177**	**984**
74180	Fairchild	74180	
	Hitachi	HD74180	
	National	DM74180	
	TI	**SN74180**	**985**
74181	Fairchild	9341	
	Hitachi	HD74181	
	National	DM74181	
	Raytheon	RC9341	
	TI	**SN74181**	**985**
74190	Fairchild	74190	
	Hitachi	HD74190	
	National	DM74190	
	TI	**SN74190**	**989**
74191	Fairchild	74191	
	Hitachi	HD74191	
	National	DM74191	
	TI	**SN74191**	**989**
74192	Fairchild	74192	
		9360	
	National	DM74192	
		DM8560	
	Raytheon	RC9360	
	TI	**SN74192**	**990**
74193	Fairchild	74193	
	National	DM74193	
		DM8563	
	TI	SN74129	
		SN74193	**990**
74194	Fairchild	74194	
	Hitachi	HD74194	
	National	DM74194	
	TI	**SN74194**	**990**
74195	Fairchild	74195	
	National	DM74195	
	TI	**SN74195**	**991**
74196	Fairchild	74196	
	National	DM74196	
		DM8290	
	Raytheon	RC8290	
	TI	**SN74196**	**991**
74197	Fairchild	74197	
	National	DM74197	
		DM8291	
	Raytheon	RC8291	
	TI	**SN74197**	**992**
74198	Fairchild	74198	
	Hitachi	HD74198	
	National	DM74198	
	TI	**SN74198**	**992**
74199	Fairchild	74199	
	National	DM74199	
	TI	**SN74199**	**993**
7420	Fairchild	7420	
		9004	
	Hitachi	HD7420	
	National	DM7420	
		DM9004C	
	TI	**SN7420**	**926**
	Toshiba	TC7420	
74200	AMD	AM27LS00	
	Fairchild	93421	
		93L420	
		93L421	
	Intel	3106	
	Motorola	MC4256	
	~~National~~	~~93L420~~	
		93L421	
		DM74S200	
	NEC	μPB2200	
	Signetics	N82S116	
		N82S16	
	TI	SN74LS200	
		(Continued)	

Manufacturer Device	Replacement Source	Device	IC Master Page
74200	TI	SN74S200	
		SN74S201	**993**
7421	Fairchild	7421	
74221	**TI**	**SN74221**	**994**
7426	Fairchild	7426	
	Hitachi	HD7426	
	National	DM7426	
		DM8810	
	TI	**SN7426**	**928**
7427	Fairchild	7427	
	Hitachi	HD7427	
	National	DM7427	
	TI	**SN7427**	**929**
74279	Fairchild	74279	
	TI	**SN74279**	**1009**
7428	**TI**	**SN7428**	**929**
74298	Fairchild	74298	
	TI	**SN74298**	**1015**
7430	Fairchild	7430	
	Hitachi	HD7430	
	National	DM7430	
	TI	**SN7430**	**929**
7432	Fairchild	7432	
	Hitachi	HD7432	
	National	DM7432	
	TI	**SN7432**	**930**
7433	**TI**	**SN7433**	**930**
74365A	**TI**	**SN74365A**	**1023**
		SN74366A	**1023**
74367A	**TI**	**SN74367A**	**1024**
74368A	**TI**	**SN74368A**	**1024**
7437	Fairchild	7437	
	Hitachi	HD7437	
	National	DM7437	
	TI	**SN7437**	**932**
7438	Fairchild	7438	
	Hitachi	HD7438	
	National	DM7438	
	TI	**SN7438**	**932**
7439	Fairchild	7439	
7440	Fairchild	7440	
	Hitachi	HD7440	
	National	DM7440	
	TI	**SN7440**	**933**
7441	Fairchild	74141	
		93141	
	Hitachi	HD74141	
		HD7441	
	National	DM74141	
		DM7441	
	Signetics	74141	
	TI	SN74141	
7442	Fairchild	7442	
	Hitachi	HD7442	
	National	DM7442	
		DM8842	
	TI	SN7442	
		SN7442A	**933**
7445	Fairchild	7445	
	Hitachi	HD7445	
	National	DM7445	
	TI	**SN7445**	**934**
7450	Fairchild	7450	
	Hitachi	HD7450	
	National	DM7450	
	TI	**SN7450**	**936**
7451	Fairchild	7451	
	Hitachi	HD7451	
	National	DM7451	
	TI	SN7451	
7473	Fairchild	7473	
	Hitachi	HD7473	
	National	DM7473	
	TI	**SN7473**	**944**
7474	Fairchild	7474	
	Hitachi	HD7474	
	National	DM7474	
	TI	SN7474	
7475	Fairchild	7475	
	Hitachi	HD7475	
	National	DM7475	
	TI	**SN7475**	**946**
7476	Fairchild	7476	
	Hitachi	HD7476	
	~~National~~	~~DM7476~~	
	TI	**SN7476**	**946**
7477	TI	SN7477	
7483	Fairchild	7483	
	Hitachi	HD7483	
	National	DM7483	
	TI	SN7483	
		SN7483A	**949**

Manufacturer Device	Replacement Source	Device	IC Master Page
7485	Fairchild	7485	
	Hitachi	HD7485	
	National	DM7485	
	TI	**SN7485**	**950**
7486	Fairchild	7486	
	Hitachi	HD7486	
	National	DM7486	
	TI	**SN7486**	**950**
7488	Fairchild	7488	
	Motorola	MC4002	
	National	DM7488	
	Signetics	N8224	
	TI	SN7488	
		SN7488A	
7489	AMD	31L01	
		AM27LS02	
		AM27S02	
		AM3101	
		AM3101A	
		SN7489-1	
	Fairchild	74S289	
	Intel	3101	
	Motorola	MC4064	
	National	DM7589	
	NEC	μPB2089	
		μPB2289	
	Signetics	3101	
		3101A	
		N8225	
		S3101	
	TI	**SN7489**	**951**
7490	Fairchild	7490	
	Hitachi	HD7490	
	National	DM7490	
	TI	SN7490	
		SN7490A	**952**
7491	Fairchild	7491	
	Hitachi	HD7491	
	National	DM7491	
	TI	SN7491	
		SN7491A	**952**
7492	Fairchild	7492	
	Hitachi	HD7492	
	National	DM7492	
	TI	SN7492	
		SN7492A	**952**
7493	Fairchild	7493	
	Hitachi	HD7493	
	National	DM7493	
	TI	SN7493	
		SN7493A	**953**
7494	Fairchild	7494	
	Hitachi	HD7494	
	TI	**SN7494**	**953**
7495	Fairchild	7495	
	Hitachi	HD7495	
	National	DM7495	
	TI	SN7495	
		SN7495A	**954**
7496	Fairchild	7496	
	Hitachi	HD7496	
	National	DM7496	
	TI	**SN7496**	**954**
74F00	Fairchild	74F00	
	Motorola	**MC74F00**	**822**
74F02	Fairchild	74F02	
	Motorola	**MC74F02**	**822**
74F04	Fairchild	74F04	
	Motorola	**MC74F04**	**822**
74F08	Fairchild	74F08	
	Motorola	**MC74F08**	**822**
74F10	Fairchild	74F10	
	Motorola	**MC74F10**	**822**
74F109	Fairchild	74F109	
	Motorola	**MC74F109**	**822**
74F11	Fairchild	74F11	
	Motorola	**MC74F11**	**822**
74F138	Fairchild	74F138	
	Motorola	**MC74F138**	**822**
74F139	Fairchild	74F139	
	Motorola	**MC74F139**	**822**
74F157	Fairchild	74F157	
74F158	Fairchild	74F158	
74F20	~~Fairchild~~	74F20	
	Motorola	**MC74F20**	**822**
74F240	**Fairchild**	**74F240**	**729**
	Motorola	**MC74F240**	**822**
74F241	**Fairchild**	**74F241**	**729**
	Motorola	**MC74F241**	**822**
74F242	Fairchild	74F242	
	Motorola	**MC74F242**	**822**

◆ Discontinued

Bold face device numbers indicate manufacturers data is provided in the IC Master on the pages noted.

© IC MASTER 1984

Signetics (Cont'd)

Manufacturer Device	Replacement Source	Device	IC Master Page
74F243	Fairchild	74F243	
	Motorola	**MC74F243**	**822**
74F244	**Fairchild**	**74F244**	**729**
	Motorola	**MC74F244**	**822**
74F257	Fairchild	74F257	
74F258	Fairchild	74F258	
74F32	Fairchild	74F32	
	Motorola	**MC74F32**	**822**
74F373	**Fairchild**	**74F373**	**734**
	Motorola	**MC74F373**	**822**
74F374	**Fairchild**	**74F374**	**736**
	Motorola	**MC74F374**	**822**
74F521	Fairchild	74F521	
74F533	Fairchild	74F533	
	Motorola	**MC74F533**	**822**
74F534	Fairchild	74F534	
	Motorola	**MC74F534**	**822**
74F74	Fairchild	74F74	
	Motorola	**MC74F74**	**822**
74F86	Fairchild	74F86	
74H101	Fairchild	74H101	
	TI	**SN74H101**	**956**
74LS00	Fairchild	74LS00	
	Hitachi	HD74LS00	
	Motorola	SN74LS00	
	National	DM74LS00	
	SGS	T74LS00	
	TI	**SN74LS00**	**920**
74LS01	Fairchild	74LS01	
	Hitachi	HD74LS01	
	Motorola	SN74LS01	
	National	DM74LS01	
	TI	**SN74LS01**	**920**
74LS02	Fairchild	74LS02	
	Hitachi	HD74LS02	
	Motorola	SN74LS02	
	National	DM74LS02	
	SGS	T74LS02	
	TI	**SN74LS02**	**920**
74LS04	Fairchild	74LS04	
	Hitachi	HD74LS04	
	Motorola	SN74LS04	
	National	DM74LS04	
	SGS	T74LS04	
	TI	**SN74LS04**	**921**
74LS05	Fairchild	74LS05	
	Hitachi	HD74LS05	
	Motorola	SN74LS05	
	National	DM74LS05	
	NEC	μPB74LS05	
	SGS	T74LS05	
	TI	**SN74LS05**	**921**
74LS08	Fairchild	74LS08	
	Hitachi	HD74LS08	
	Motorola	SN74LS08	
	National	DM74LS08	
	SGS	T74LS08	
	TI	**SN74LS08**	**922**
74LS10	Fairchild	74LS10	
	Hitachi	HD74LS10	
	Motorola	SN74LS10	
	National	DM74LS10	
	SGS	T74LS10	
	TI	**SN74LS10**	**923**
74LS107	Hitachi	HD74LS107	
	Motorola	SN74LS107A	
	National	DM74LS107	
	TI	SN74LS107	
		SN74LS107A	**957**
74LS109	Fairchild	74LS109	
	Hitachi	HD74LS109	
	Motorola	SN74LS109	
		SN74LS109A	
	National	DM74LS109	
	SGS	T74LS109	
	TI	**SN74LS109A**	**958**
74LS11	Fairchild	74LS11	
	Hitachi	HD74LS11	
	Motorola	SN74LS11	
	National	DM74LS11	
	SGS	T74LS11	
	TI	**SN74LS11**	**923**
74LS112	Fairchild	74LS112	
	Hitachi	HD74LS112	
	Motorola	SN74LS112A	
	National	DM74LS112	
	SGS	T74LS112	
	TI	**SN74LS112A**	**959**
74LS113	Fairchild	74LS113	
	Hitachi	HD74LS113	

(Continued)

Manufacturer Device	Replacement Source	Device	IC Master Page
74LS113	Motorola	SN74LS113A	
	National	DM74LS113	
	SGS	T74LS113	
	TI	**SN74LS113A**	**959**
74LS12	Hitachi	HD74LS12	
	Motorola	SN74LS12	
	National	DM74LS12	
	TI	**SN74LS12**	**924**
74LS125A	Fairchild	74LS125A	
	Motorola	SN74LS125A	
	National	DM74LS125	
	SGS	T74LS125	
	TI	**SN74LS125A**	**962**
74LS126A	Fairchild	74LS126	
	Motorola	SN74LS126A	
	National	DM74LS126	
	SGS	T74LS126	
	TI	**SN74LS126A**	**962**
74LS13	Fairchild	74LS13	
	Hitachi	HD74LS13	
	Motorola	SN74LS13	
	National	DM74LS13	
	TI	**SN74LS13**	**924**
74LS132	Fairchild	74LS132	
	Hitachi	HD74LS132	
	Motorola	SN74LS132	
	National	DM74LS132	
	SGS	T74LS132	
	TI	**SN74LS132**	**965**
74LS136	Fairchild	74LS136	
	Hitachi	HD74LS136	
	Motorola	SN74LS136	
	National	DM74LS136	
	SGS	T74LS136	
	TI	**SN74LS136**	**966**
74LS138	Fairchild	74LS138	
	Hitachi	HD74LS138	
	Motorola	SN74LS138	
	National	DM74LS138	
	SGS	T74LS138	
	TI	**SN74LS138**	**968**
74LS139	Fairchild	74LS139	
	Hitachi	HD74LS139	
	Motorola	SN74LS139	
	National	DM74LS139	
	SGS	T74LS139	
	TI	**SN74LS139**	**968**
74LS14	Fairchild	74LS14	
	Hitachi	HD74LS14	
	Motorola	SN74LS14	
	National	DM74LS14	
	TI	**SN74LS14**	**924**
74LS151	Fairchild	74LS151	
	Hitachi	HD74LS151	
		HD74LS151A	
	Motorola	SN74LS151	
	National	DM74LS151	
	SGS	T74LS151	
	TI	**SN74LS151**	**972**
74LS152	Hitachi	HD74LS152	
74LS153	Fairchild	74LS153	
	Hitachi	HD74LS153	
	Motorola	SN74LS153	
	National	DM74LS153	
	SGS	T74LS153	
	TI	**SN74LS153**	**972**
74LS154	National	DM74LS154	
74LS155	Fairchild	74LS155	
	Hitachi	HD74LS155	
	Motorola	SN74LS155	
	National	DM74LS155	
	TI	**SN74LS155**	**974**
74LS156	Fairchild	74LS156	
	Hitachi	HD74LS156	
	Motorola	SN74LS156	
	National	DM74LS156	
	SGS	T74LS156	
	TI	**SN74LS156**	**974**
74LS157	Fairchild	74LS157	
	Hitachi	HD74LS157	
	Motorola	SN74LS157	
	National	DM74LS157	
	SGS	T74LS157	
	TI	**SN74LS157**	**975**
74LS158	Fairchild	74LS158	
	Hitachi	HD74LS158	
	Motorola	SN74LS158	
	National	DM74LS158	
	SGS	T74LS158	
	TI	**SN74LS158**	**975**
74LS160	Fairchild	74LS160	
	Hitachi	HD74LS160A	

(Continued)

Manufacturer Device	Replacement Source	Device	IC Master Page
74LS160	Motorola	SN74LS160A	
	National	DM74LS160	
	SGS	T74LS160	
	Signetics	74LS160A	
	TI	**SN74LS160A**	**977**
74LS160A	Fairchild	74LS160	
	Hitachi	HD74LS160A	
	Motorola	SN74LS160A	
	National	DM74LS160	
	SGS	T74LS160	
	Signetics	74LS160	
	TI	**SN74LS160A**	**977**
74LS161A	Fairchild	74LS161A	
	Hitachi	HD74LS161A	
	Motorola	SN74LS161A	
	National	DM74LS161	
	NEC	μPB74LS161	
	SGS	T74LS161	
	TI	**SN74LS161A**	**977**
74LS162A	Fairchild	74LS162	
	Hitachi	HD74LS162A	
	Motorola	SN74LS162A	
	National	DM74LS162	
	SGS	T74LS162	
	TI	**SN74LS162A**	**978**
74LS163A	Fairchild	74LS163	
	Hitachi	HD74LS163	
		HD74LS163A	
	Motorola	SN74LS163A	
	National	DM74LS163	
	SGS	T74LS163	
	TI	**SN74LS163A**	**978**
74LS164	Fairchild	74LS164	
	Hitachi	HD74LS164	
	Motorola	SN74LS164A	
	National	DM74LS164	
	SGS	T74LS164	
	Signetics	74LS164A	
	TI	**SN74LS164**	**979**
74LS164A	Fairchild	74LS164	
	Hitachi	HD74LS164	
	Motorola	SN74LS164A	
	National	DM74LS164	
	SGS	T74LS164	
	Signetics	74LS164	
	TI	**SN74LS164**	**979**
74LS168A	Fairchild	74LS168	
	Hitachi	HD74LS168	
	Motorola	SN74LS168	
	National	DM74LS168	
	TI	SN74LS168	
74LS169A	Fairchild	74LS169	
	Hitachi	HD74LS169	
	Motorola	SN74LS169	
	National	DM74LS169	
74LS170	Fairchild	74LS170	
	Motorola	SN74LS170	
	National	DM74LS170	
	SGS	T74LS170	
	TI	**SN74LS170**	**981**
74LS173	Fairchild	74LS173	
	Motorola	SN74LS173A	
	National	DM74LS173	
	SGS	T74LS173	
	TI	**SN74LS173A**	**982**
74LS174	Fairchild	74LS174	
	Hitachi	HD74LS174	
	Motorola	SN74LS174	
	National	DM74LS174	
	SGS	T74LS174	
	TI	**SN74LS174**	**983**
74LS175	Fairchild	74LS175	
	Hitachi	HD74LS175	
	Motorola	SN74LS175	
	SGS	T74LS175	
	TI	**SN74LS175**	**983**
74LS181	Fairchild	74LS181	
	Hitachi	HD74LS181	
	Motorola	SN74LS181	
	SGS	T74LS181	
	TI	**SN74LS181**	**985**
74LS191	Fairchild	74LS191	
	Hitachi	HD74LS191	
	Motorola	SN74LS191	
	National	DM74LS191	
	SGS	T74LS191	
	TI	**SN74LS191**	**989**
74LS192	Fairchild	74LS192	
	Hitachi	HD74LS192	
	Motorola	SN74LS192	
	National	DM74LS192	

(Continued)

Manufacturer Device	Replacement Source	Device	IC Master Page
74LS192	SGS	T74LS192	
	TI	**SN74LS192**	**990**
74LS193	Fairchild	74LS193	
	Hitachi	HD74LS193	
	Motorola	SN74LS193	
	National	DM74LS193	
	SGS	T74LS193	
	TI	**SN74LS193**	**990**
74LS194A	Fairchild	74LS194A	
	Hitachi	HD74LS194A	
	Motorola	SN74LS194A	
	National	DM74LS194	
	SGS	T74LS194A	
	TI	**SN74LS194A**	**990**
74LS195A	Fairchild	74LS195A	
	Hitachi	HD74LS195A	
	Motorola	SN74LS195A	
	National	DM74LS195	
	SGS	T74LS195A	
	TI	**SN74LS195A**	**991**
74LS197	Fairchild	74LS197	
	Hitachi	HD74LS197	
	Motorola	SN74LS197	
	National	DM74LS197	
	TI	**SN74LS197**	**992**
74LS20	Fairchild	74LS20	
	Hitachi	HD74LS20	
	Motorola	SN74LS20	
	National	DM74LS20	
	SGS	T74LS20	
	TI	**SN74LS20**	**926**
74LS21	Fairchild	74LS21	
	Hitachi	HD74LS21	
	Motorola	SN74LS21	
	National	DM74LS21	
	SGS	T74LS21	
	TI	**SN74LS21**	**927**
74LS240	Fairchild	74LS240	
	Hitachi	HD74LS240	
	MMI	**SN74LS240**	**804**
	Motorola	SN74LS240	
	TI	SN74LS240	
74LS241	Fairchild	74LS241	
	Hitachi	HD74LS241	
	MMI	**SN74LS241**	**804**
	Motorola	SN74LS241	
	TI	SN74LS241	
74LS242	Fairchild	74LS242A	
	Motorola	SN74LS242	
	TI	SN74LS242	
74LS243	Fairchild	74LS243A	
	Motorola	SN74LS243	
	TI	SN74LS243	
74LS244	Fairchild	74LS244	
	Hitachi	HD74LS244	
	MMI	**SN74LS244**	**804**
	Motorola	SN74LS244	
	TI	SN74LS244	
74LS245	Fairchild	74LS245	
	GTEMicro	G74SC245	
	Mitel	MD74SC245	
	MMI	**SN74LS245**	**804**
	Motorola	SN74LS245	
	National	DM74LS245	
	Plessey	MV74SC245	
	SPI	SP74SC245	
	Signetics	**N8T245**	**876**
	TI	SN74LS245	
74LS251	Fairchild	74LS251	
	Hitachi	HD74LS251	
	Motorola	SN74LS251	
	National	DM74LS251	
	SGS	T74LS251	
	TI	**SN74LS251**	**1003**
74LS253	Fairchild	74LS253	
	Hitachi	HD74LS253	
	Motorola	SN74LS253	
	National	DM74LS253	
		DM8214	
	SGS	T74LS253	
	TI	**SN74LS253**	**1003**
74LS256	Fairchild	74LS256	
	Motorola	SN74LS256	
74LS257	Fairchild	74LS257A	
	Hitachi	HD74LS257	
	Motorola	SN74LS257A	
	National	DM74LS257	
	SGS	T74LS257	
	Signetics	74LS257A	
	TI	SN74LS257	
74LS257A	Fairchild	74LS257A	
	Hitachi	HD74LS257	

(Continued)

◆ Discontinued

The manufacturers report their devices can be used as direct replacements.
Performance details often differ, so compare the specifications considering your requirements.

Signetics (Cont'd)

Manufacturer Device	Replacement Source	Device	IC Master Page
74LS257A	Motorola	SN74LS257A	
	National	DM74LS257	
	SGS	T74LS257	
	Signetics	74LS257	
	TI	SN74LS257	
74LS258	Fairchild	74LS258A	
	Hitachi	HD74LS258	
	Motorola	SN74LS258A	
	National	DM74LS258	
	SGS	T74LS258	
	TI	SN74LS258	
74LS259	Fairchild	74LS259	
	Motorola	SN74LS259	
	SGS	T74LS259	
	TI	**SN74LS259**	**1005**
74LS26	Fairchild	74LS26	
	Hitachi	HD74LS26	
	Motorola	SN74LS26	
	National	DM74LS26	
	SGS	T74LS26	
	TI	**SN74LS26**	**928**
74LS260	Fairchild	74LS260	
	Motorola	SN74LS260	
74LS266	Fairchild	74LS266	
	Motorola	SN74LS266	
	National	DM74LS266	
	Raytheon	RC8242	
	SGS	T74LS266	
	Signetics	**N8242**	**876**
	TI	**SN74LS266**	**1007**
74LS27	Fairchild	74LS27	
	Hitachi	HD74LS27	
	Motorola	SN74LS27	
	National	DM74LS27	
	SGS	T74LS27	
	TI	**SN74LS27**	**929**
74LS273	**AMD**	**AM25LS273**	**1427**
	Fairchild	74LS273	
	MMI	**SN74LS273**	**804**
	Motorola	SN74LS273	
	SGS	T74LS273	
	TI	**SN74LS273**	**1007**
74LS279	Fairchild	74LS279	
	Hitachi	HD74LS279	
	Motorola	SN74LS279	
	National	DM74LS279	
	TI	**SN74LS279**	**1009**
74LS283	Fairchild	74LS283	
	Hitachi	HD74LS283	
		HD74LS283A	
	Motorola	SN74LS283	
	National	DM74LS283	
	SGS	T74LS283	
	TI	**SN74LS283**	**1011**
74LS290	Fairchild	74LS290	
	Hitachi	HD74LS290	
	Motorola	SN74LS290	
	National	DM74LS290	
	SGS	T74LS290	
	TI	**SN74LS290**	**1012**
74LS293	Fairchild	74LS293	
	Hitachi	HD74LS293	
	Motorola	SN74LS293	
	National	DM74LS293	
	SGS	T74LS293	
	TI	**SN74LS293**	**1014**
74LS295A	Fairchild	74LS295A	
	Motorola	SN74LS295A	
	SGS	T74LS295A	
	Signetics	74LS295B	
	TI	**SN74LS295B**	**1014**
74LS295B	Fairchild	74LS295A	
	Motorola	SN74LS295A	
	SGS	T74LS295A	
	Signetics	74LS295A	
	TI	**SN74LS295B**	**1014**
74LS298	Fairchild	74LS298	
	Hitachi	HD74LS298	
	Motorola	SN74LS298	
	SGS	T74LS298	
	TI	**SN74LS298**	**1015**
74LS30	Fairchild	74LS30	
	Hitachi	HD74LS30	
	Motorola	SN74LS30	
	National	DM74LS30	
	SGS	T74LS30	
	TI	**SN74LS30**	**929**
74LS32	Fairchild	74LS32	
	Hitachi	HD74LS32	
	Motorola	SN54LS32	
		(Continued)	

Manufacturer Device	Replacement Source	Device	IC Master Page
74LS32	Motorola	SN74LS32	
	National	DM74LS32	
	SGS	T74LS32	
	TI	**SN74LS32**	**930**
74LS33	Fairchild	74LS33	
	Motorola	SN74LS33	
	TI	**SN74LS33**	**930**
74LS365	Fairchild	74LS365A	
	Motorola	SN74LS365A	
	National	DM74LS365	
	SGS	T74LS365A	
	Signetics	74LS365A	
	TI	**SN74LS365A**	**1023**
74LS365A	Fairchild	74LS365A	
	Motorola	SN74LS365A	
	National	DM74LS365	
	SGS	T74LS365A	
	Signetics	74LS365	
	TI	**SN74LS365A**	**1023**
74LS366A	Fairchild	74LS366A	
	Motorola	SN74LS366A	
	National	DM74LS366	
	SGS	T74LS366A	
	TI	**SN74LS366A**	**1023**
74LS367	Fairchild	74LS367A	
	Hitachi	HD74LS367	
		HD74LS367A	
	Motorola	SN74LS367A	
	National	DM74LS367	
	SGS	T74LS367A	
	Signetics	74LS367A	
	TI	**SN74LS367A**	**1024**
74LS367A	Fairchild	74LS367A	
	Hitachi	HD74LS367	
		HD74LS367A	
	Motorola	SN74LS367A	
	National	DM74LS367	
	SGS	T74LS367A	
	Signetics	74LS367	
	TI	**SN74LS367A**	**1024**
74LS368	Fairchild	74LS368A	
	Hitachi	HD74LS368	
	Motorola	SN74LS368A	
	National	DM74LS368	
	SGS	T74LS368	
	Signetics	74LS368A	
	TI	**SN74LS368A**	**1024**
74LS368A	Fairchild	74LS368A	
	Hitachi	HD74LS368	
	Motorola	SN74LS368A	
	National	DM74LS368	
	SGS	T74LS368	
	Signetics	74LS368	
	TI	**SN74LS368A**	**1024**
74LS37	Fairchild	74LS37	
	Hitachi	HD74LS37	
	Motorola	SN74LS37	
	National	DM74LS37	
	SGS	T74LS37	
	TI	**SN74LS37**	**932**
74LS373	Fairchild	74LS373	
	MMI	**SN74LS373**	**804**
	Motorola	SN74LS373	
	SGS	T74LS373	
	TI	**SN74LS373**	**1025**
74LS374	Fairchild	74LS374	
	MMI	**SN74LS374**	**804**
	Motorola	SN74LS374	
	National	DM74LS374	
	SGS	T74LS374	
	TI	**SN74LS374**	**1026**
74LS375	Fairchild	74LS375	
	Motorola	SN74LS375	
	TI	**SN74LS375**	**1026**
74LS377	**AMD**	**AM25LS377**	**1427**
	Fairchild	74LS377	
	MMI	**SN74LS377**	**804**
	Motorola	SN74LS377	
	SGS	T74LS377	
	TI	**SN74LS377**	**1027**
74LS378	AMD	SN74LS378	
	Fairchild	74LS378	
	Motorola	SN74LS378	
	SGS	T74LS378	
	TI	**SN74LS378**	**1027**
74LS38	Fairchild	74LS38	
	Hitachi	HD74LS38	
	Motorola	SN74LS38	
	National	DM74LS38	
	SGS	T74LS38	
	TI	**SN74LS38**	**932**

Manufacturer Device	Replacement Source	Device	IC Master Page
74LS393	Fairchild	74LS393	
	Motorola	SN74LS393	
	SGS	T74LS393	
	TI	**SN74LS393**	**1031**
74LS395	Fairchild	74LS395	
	Motorola	SN74LS395	
	National	DM74LS395	
	SGS	T74LS395	
	TI	**SN74LS395A**	**1031**
74LS40	Fairchild	74LS40	
	Hitachi	HD74LS40	
	Motorola	SN74LS40	
	National	DM74LS40	
	SGS	T74LS40	
	TI	**SN74LS40**	**933**
74LS42	Fairchild	74LS42	
	Hitachi	HD74LS42	
	Motorola	SN74LS42	
	National	DM74LS42	
	SGS	T74LS42	
	TI	**SN74LS42**	**933**
74LS48	Fairchild	74LS48	
	Hitachi	HD74LS48	
	Motorola	SN74LS48	
	National	DM74LS48	
	SGS	T74LS48	
	TI	**SN74LS48**	**935**
74LS490	Fairchild	74LS490	
	Motorola	SN74LS490	
	SGS	T74LS490	
	TI	**SN74LS490**	**1043**
74LS51	Fairchild	74LS51	
	Hitachi	HD74LS51	
	Motorola	SN74LS51	
	National	DM74LS51	
	SGS	T74LS51	
	TI	**SN74LS51**	**936**
74LS54	Fairchild	74LS54	
	Hitachi	HD74LS54	
	Motorola	SN74LS54	
	National	DM74LS54	
	SGS	T74LS54	
	TI	**SN74LS54**	**938**
74LS540	Fairchild	74LS540	
	Motorola	SN74LS540	
	TI	**SN74LS540**	**1050**
74LS541	Fairchild	74LS541	
	Motorola	SN74LS541	
	TI	**SN74LS541**	**1050**
74LS568	AMD	SN74LS568	
	Motorola	SN74LS568	
74LS569	AMD	SN74LS569	
	Motorola	SN74LS569	
74LS640	Motorola	SN74LS640	
	Signetics	**N8T125**	**876**
	TI	**SN74LS640**	**1074**
74LS641	Motorola	SN74LS641	
	TI	**SN74LS641**	**1074**
74LS642	Motorola	SN74LS642	
	TI	**SN74LS642**	**1074**
74LS645	**MMI**	**SN74LS645**	**804**
	Motorola	SN74LS645	
	TI	**SN74LS645**	**1074**
74LS670	Fairchild	74LS670	
	Motorola	SN74LS670	
	National	DM74LS670	
	SGS	T74LS670	
	TI	**SN74LS670**	**1080**
74LS73	Hitachi	HD74LS73	
	Motorola	SN74LS73A	
	National	DM74LS73	
	TI	**SN74LS73A**	**944**
74LS74	Fairchild	74LS74	
	Hitachi	HD74LS74	
		HD74LS74A	
	Motorola	SN74LS74A	
	National	DM74LS74	
	SGS	T74LS74	
	TI	**SN74LS74A**	**945,946**
74LS75	Hitachi	HD74LS75	
	Motorola	SN74LS75	
	National	DM74LS75	
	TI	SN74LS75	
74LS76	Hitachi	HD74LS76	
	Motorola	SN74LS76A	
	National	DM74LS76	
	TI	**SN74LS76A**	**946**
74LS83	Fairchild	74LS83A	
	Hitachi	HD74LS183A	
		HD74LS83A	
	Motorola	SN74LS83A	
		(Continued)	

Manufacturer Device	Replacement Source	Device	IC Master Page
74LS83	National	DM74LS83A	
	Signetics	74LS83A	
	TI	**SN74LS83A**	**949**
74LS83A	Fairchild	74LS83A	
	Hitachi	HD74LS183A	
		HD74LS83A	
	Motorola	SN74LS83A	
	National	DM74LS83A	
	Signetics	74LS83	
	TI	**SN74LS83A**	**949**
74LS85	Fairchild	74LS85	
	Hitachi	HD74LS85	
	Motorola	SN74LS85	
	National	DM74LS85	
	TI	**SN74LS85**	**950**
74LS86	Fairchild	74LS86	
	Hitachi	HD74LS86	
	Motorola	SN74LS86	
	National	DM74LS86	
	SGS	T74LS86	
	TI	**SN74LS86**	**950**
74LS89	Motorola	SN74LS89	
74LS90	Fairchild	74LS90	
	Motorola	SN74LS90	
	National	DM74LS90	
	SGS	T74LS90	
	TI	**SN74LS90**	**952**
74LS92	Fairchild	74LS92	
	Hitachi	HD74LS92	
	Motorola	SN74LS92	
	National	DM74LS92	
	SGS	T74LS92	
	TI	**SN74LS92**	**952**
74LS93	Fairchild	74LS93	
	Hitachi	HD74LS93	
	Motorola	SN74LS93	
	National	DM74LS93	
	SGS	T74LS93	
	TI	**SN74LS93**	**953**
74LS95B	Fairchild	74LS95B	
	Hitachi	HD74LS95B	
	Motorola	SN74LS95B	
	National	DM74LS95B	
	SGS	T74LS95B	
	TI	**SN74LS95B**	**954**
74LS96	**TI**	**SN74LS96**	**954**
74S00	Fairchild	74S00	
	Hitachi	HD74S00	
	National	DM74S00	
	TI	**SN74S00**	**920**
74S02	Fairchild	74S02	
	Hitachi	HD74S02	
	National	DM74S02	
	TI	**SN74S02**	**920**
		SN74S32	**930**
74S03	Fairchild	74S03	
	Hitachi	HD74S03	
	National	DM74S03	
	TI	**SN74S03**	**921**
74S04	Fairchild	74S04	
	Hitachi	HD74S04	
	National	DM74S04	
	TI	**SN74S04**	**921**
74S05	Fairchild	74S05	
	Hitachi	HD74S05	
	National	DM74S05	
	TI	**SN74S05**	**921**
74S08	Fairchild	74S08	
	TI	**SN74S08**	**922**
74S10	Fairchild	74S10	
	Hitachi	HD74S10	
	National	DM74S10	
	TI	**SN74S10**	**923**
74S11	Fairchild	74S11	
	Hitachi	HD74S11	
	National	DM74S11	
	TI	**SN74S11**	**923**
74S112	Fairchild	74S112	
	Hitachi	HD74S112	
	Motorola	SN74S112	
	National	DM74S112	
	TI	**SN74S112**	**959**
74S113	Fairchild	74S113	
	Hitachi	HD74S113	
	National	DM74S113	
	TI	**SN74S113**	**959**
74S133	Fairchild	74S133	
	Hitachi	HD74S133	
	National	DM74S133	
	TI	SN74S133	965

‡ Discontinued

Bold face device numbers indicate manufacturers data is provided in the IC Master on the pages noted.

© IC MASTER 1984

Signetics (Cont'd)

Manufacturer Device	Replacement Source	Device	IC Master Page
74S134	Hitachi	HD74S134	
	National	DM74S134	
	TI	**SN74S134**	**965**
74S135	Fairchild	74S135	
	Hitachi	HD74S135	
	National	DM74S135	
	TI	**SN74S135**	**966**
74S138	AMD	SN74S138	
	Fairchild	74S138	
	National	DM74S138	
	TI	**SN74S138**	**968**
74S139	AMD	SN74S139	
	Fairchild	74S139	
	National	DM74S139	
	TI	**SN74S139**	**968**
74S140	Fairchild	74S140	
	Hitachi	HD74S140	
	National	DM74S140	
	TI	**SN74S140**	**969**
74S151	AMD	SN74S151	
	Fairchild	74S151	
	Hitachi	HD74S151	
	National	DM74S151	
	TI	**SN74S151**	**972**
74S153	AMD	SN74S153	
	Fairchild	74S153	
	Hitachi	HD74S153	
	National	DM74S153	
	TI	**SN74S153**	**972**
74S157	AMD	SN74S157	
	Fairchild	74S157	
	Hitachi	HD74S157	
	National	DM74S157	
	TI	**SN74S157**	**975**
74S158	AMD	SN74S158	
	Fairchild	74S158	
	Hitachi	HD74S158	
	National	DM74S158	
	TI	**SN74S158**	**975**
74S168	**TI**	**SN74S168**	**980**
74S169	**TI**	**SN74S169**	**980**
74S174	AMD	SN74S174	
	Fairchild	74S174	
	Hitachi	HD74S174	
	National	DM74S174	
	TI	**SN74S174**	**983**
74S175	AMD	SN74S175	
	Fairchild	74S175	
	Hitachi	HD74S175	
	National	DM74S175	
	TI	SN74S175	
74S181	AMD	SN74S181	
	Fairchild	93S41C	
	Hitachi	HD74S181	
	TI	**SN74S181**	**985**
74S182	Fairchild	74S182	
	Hitachi	HD74S182	
	MMI	**SN74S182**	**819**
	National	DM74S182	
	TI	**SN74S182**	**986**
74S189	AMD	AM27LS03	
		AM27S03	
		SN74S189	
	Fairchild	74S189	
		93405	
	Hitachi	HD74S189	
	National	DM74S189	
		DM7599	
		DM8599	
	TI	SN74S189	
74S194	AMD	SN74S194	
	Fairchild	74S194	
	TI	**SN74S194**	**990**
74S195	AMD	SN74S195	
	Fairchild	74S195	
		93S00C	
	National	DM74S195	
	TI	**SN74S195**	**991**
74S196	**TI**	**SN74S196**	**991**
74S197	**TI**	**SN74S197**	**992**
74S20	Fairchild	74S20	
	Hitachi	HD74S20	
	National	DM74S20	
	TI	**SN74S20**	**926**
74S240	AMD	SN74S240	
	MMI	**SN74S240**	**804**
	TI	SN74S240	
74S241	AMD	SN74S241	
	MMI	**SN74S241**	**804**
	TI	SN74S241	
74S244	AMD	SN74S244	
74S251	AMD	SN74S251	
	Hitachi	HD74S251	
	National	DM74S251	
	TI	**SN74S251**	**1003**
74S253	AMD	SN74S253	
	Fairchild	74S253	
	National	DM74S253	
74S257	AMD	SN74S257	
	Fairchild	74S257	
	Hitachi	HD74S257	
	National	DM7123	
		DM74S257	
		DM8123	
	TI	**SN74S257**	**1004**
74S258	AMD	SN74S258	
	Fairchild	74S258	
	Hitachi	HD74S258	
	TI	**SN74S258**	**1005**
74S280	Hitachi	HD74S280	
	National	DM74S280	
	TI	**SN74S280**	**1009**
74S289	Fairchild	7489	
	Hitachi	HD7489	
		HD74S289	
	National	DM7489	
		DM74S289	
		DM8589	
		MM74S289	
	Signetics	N82S25	
	TI	SN74S289	
74S301	AMD	AM27LS01	
		AM29720	
	Fairchild	93411	
		93L411	
	Intel	3107	
	National	DM74S206	
		N82S117	
		N82S17	
	Signetics	N82S17	
	TI	SN74206	
		SN74S301	**1016**
74S32	Fairchild	74S32	
74S37	**TI**	**SN74S37**	**932**
74S373	**MMI**	**SN74S373**	**804**
	TI	**SN74S373**	**1025**
74S374	**MMI**	**SN74S374**	**804**
	TI	**SN74S374**	**1026**
74S40	Fairchild	74S40	
	Hitachi	HD74S40	
	National	DM74S40	
	TI	**SN74S40**	**933**
74S51	Fairchild	74S51	
	Hitachi	HD74S51	
	National	DM74S51	
	TI	**SN74S51**	**936**
74S534	AMD	AM74S534	
	MMI	74S534	
74S74	Fairchild	74S74	
	Hitachi	HD74S74	
	National	DM74S74	
	TI	SN74S74	
74S85	**TI**	**SN74S85**	**950**
74S86	Fairchild	74S86	
	Hitachi	HD74S86	
	National	DM74S86	
	TI	**SN74S86**	**950**
7524	Fairchild	75S24	
	Hitachi	HA1902	
	Motorola	MC7524	
	National	DS75S24	
	SiliconG	SG7524	
	TI	SN75224	
		SN7524	
8021	Intel	8021	
8243	AMD	8243	
	Fujitsu	MB8243	
	Intel	8243	
	NEC	μPD8243	
825181	AMD	AM27PS181	
		AM27S181	
		AM27S281	
	Fairchild	93Z451	
		F93451	
	Fujitsu	MB7132	
	Harris	HM7681	
	Hitachi	HN25089	
	Intel	3628	
		3628A	
		3628B	
	MMI	6381-1	
	Motorola	**MCM7681**	**4047**

(Continued)

Manufacturer Device	Replacement Source	Device	IC Master Page
825181	**National**	**DM87S181**	**4057**
		DM87S228	
	NEC	μPB417	
	Raytheon	29631	
		29631A	**4131**
		29633	
	Signetics	N82HS181	
		N82S181	
	Supertex	SM82S181	
	TI	TBP28S86	
9401	Fairchild	9401	
		F9401	
	Motorola	MC8503	
9403	Fairchild	9403	
		F9403	
AM6012	AMD	AM6012	
	AD	AD562	
	Burr-Brown	DAC862	
	Datel	DAC-562	
	Harris	HI562	
	MCE	MCE-6012	
	MicroPwr	MP562	
	Motorola	**AD562**	**3069**
	NEC	μPC6012	
		μPC648	
	PMI	DAC-312	
		DAC312B12	
	Raytheon	DAC-6012	
		DAC6012	
	TeledyneP	4068	
CA3081	Plessey	SL3081	
	RCA	**CA3081**	**3601**
	SiliconG	SG3081	
	Sprague	ULN-2081	
◆CA3082	Plessey	SL3082	
	RCA	**CA3082**	**3601**
	SiliconG	SG3082	
	Sprague	ULN-2082	
◆CA3083	Plessey	SL3083	
		SL3183	
	RCA	CA3083	
		CA3183	**3601**
	SiliconG	SG3083	
		SG3183	
	Sprague	ULN-2083	
CA3089	Hitachi	HA1137	
		HA1230	
	National	CA3089	
		LM3089	
	RCA	CA3089	
	Sanyo	LA1230	
		LA3089	
	SGS	TCA3089	
		TDA1200	
	Telefunken	U417	
	TI	SN76689	
◆CA3183	Plessey	SL3083	
		SL3183	
	RCA	CA3083	
		CA3183	**3601**
	SiliconG	SG3083	
		SG3183	
	Sprague	ULN-2083	
◆CA3189	SGS	TCA3189	
	Sprague	ULN-3889	
◆DAC-312	AMD	AM6012	
	AD	AD562	
	Burr-Brown	DAC862	
	Datel	DAC-562	
	Harris	HI562	
	MCE	MCE-6012	
	MicroPwr	MP562	
	Motorola	**AD562**	**3069**
	NEC	μPC6012	
		μPC648	
	PMI	DAC-312	
		DAC312B12	
	Raytheon	DAC-6012	
		DAC6012	
	Signetics	**AM6012**	**3605**
	TeledyneP	4068	
◆DS8820	National	DS8820	
		DS8880	
	TI	DS8820	
		SN75182	
		SN75480	
◆DS8830	National	DS8830	
	TI	DS8830	
		SN75183	
HEF400	Motorola	MC14000	
	National	CD4000	
	RCA	CD4000	

(Continued)

Manufacturer Device	Replacement Source	Device	IC Master Page
HEF400	SGS	HCF4000	
	SSS	SCL4000	
	Solitron	CM4000	
HEF4001	Fairchild	F4001	
	Hitachi	HD14001	
	Motorola	MC14001	
	National	CD4001	
		MM74C02	
	OKI	MSM4001	
	RCA	CD4001	
	Sanyo	LC4001B	
	SGS	HCF4001	
	SSS	SCL4001	
	Solitron	CM4001	
	Toshiba	TC4001	
HEF4002	Fairchild	F4002	
	Hitachi	HD14002	
	Motorola	MC14002	
	National	CD4002	
	RCA	CD4002	
	SGS	HCF4002	
	SSS	SCL4002	
	Solitron	CM4002	
	Toshiba	TC4002	
HEF4006	Fairchild	F4006	
	Hitachi	HD14006	
	National	CD4006	
	SGS	HCF4006	
	SSS	SCL4006	
	Solitron	CM4006	
	Toshiba	TC4006	
HEF4007	Fairchild	F4007	
	Hitachi	HD14007	
	Motorola	MC14007	
	National	CD4007	
	RCA	CD4007	
	SGS	HCF4007	
	SSS	SCL4007	
	Solitron	CM4007	
	Toshiba	TC4007	
HEF4008	Fairchild	F4008	
	Hitachi	HD14008	
	Motorola	MC14008	
	National	CD4008	
		MM74C83	
	RCA	CD4008	
	SGS	HCF4008	
	SSS	SCL4008	
	Solitron	CM4008	
	Toshiba	TC4008	
HEF40097	Fairchild	F40097	
	Hitachi	HD14503	
	Motorola	MC14503	
	National	CD4503	
		MM80C97	
	RCA	CD4503	
HEF40098	Fairchild	F40098	
	National	MM80C98	
HEF40106	Fairchild	F40014	
	Hitachi	HD14584	
	Motorola	MC14584	
	National	CD40106	
		CD4584	
		MM54C14	
		MM74C14	
	RCA	CD40106	
	SGS	HCF40106	
	SSS	SCL4584	
HEF4011	Fairchild	F4011	
	Hitachi	HD14011	
	Motorola	MC14011	
	National	CD4011	
		MM74C00	
	OKI	MSM4011	
	RCA	CD4011	
	Sanyo	LC4011	
	SGS	HCF4011	
	SSS	SCL4011	
	Solitron	CM4011	
	Toshiba	TC4011	
HEF4012	Fairchild	F4012	
	Hitachi	HD14012	
	Motorola	MC14012	
	National	CD4012	
	RCA	CD4012	
	SGS	HCF4012	
	SSS	SCL4012	
	Solitron	CM4012	
	Toshiba	TC4012	
HEF4013	Fairchild	F4013	
	Hitachi	HD14013	
	Motorola	MC14013	

(Continued)

◆ Discontinued

The manufacturers report their devices can be used as direct replacements.
Performance details often differ, so compare the specifications considering your requirements.

Signetics (Cont'd)

Manufacturer Device	Replacement Source	Device	IC Master Page
HEF4013	National	CD4013	
		MM74C74	
	OKI	MSM4013	
	RCA	CD4013	
	Sanyo	LC4013	
	SGS	HCF4013	
	SSS	SCL4013	
	Solitron	CM4013	
	Toshiba	TC4013	
HEF4014	Fairchild	F4014	
	Hitachi	HD14014	
	Motorola	MC14014	
	National	CD4014	
	RCA	CD4014	
	SGS	HCF4014	
	SSS	SCL4014	
	Solitron	CM4014	
	Toshiba	TC4014	
HEF4015	Fairchild	F4015	
	Hitachi	HD14015	
	Motorola	MC14015	
	National	CD4015	
		MM74C164	
	OKI	MSM4015	
	RCA	CD4015	
	Sanyo	LC4015	
	SGS	HCF4015	
	SSS	SCL4015	
	Solitron	CM4015	
	Toshiba	TC4015	
HEF4016	Fairchild	F4016	
		F4066	
	Hitachi	HD14016	
		HD14066	
	Motorola	MC14016	
		MC14066	
	National	CD4016	
		CD4066	
	RCA	CD4016	
		CD4066	
	Sanyo	LC4016	
		LC4066	
	SGS	HCF4016	
		HCF4066	
	Signetics	HEF4066	
	SSS	SCL4016	
		SCL4066	
	Solitron	CM4016	
		CM4066	
		HCF4016	
	Toshiba	TC4016	
		TC4066	
HEF40161	Fairchild	F40161	
	Hitachi	HD14161	
	Motorola	MC14161	
	National	CD40161	
		MM54C161	
		MM74C161	
	RCA	CD40161	
	SGS	HCF40161	
	SSS	SCL4161	
	Toshiba	TC40161	
HEF40162	Fairchild	F40162	
	Hitachi	HD14162	
	Motorola	MC14162	
	National	CD40162	
		MM54C162	
		MM74C162	
	RCA	CD40162	
	SGS	HCF40162	
	SSS	SCL4162	
	Toshiba	TC40162	
HEF40163	Fairchild	F40163	
	Hitachi	HD14163	
	Motorola	MC14163	
	National	CD40163	
		MM54C163	
		MM74C163	
	RCA	CD40163	
	SGS	HCF40163	
	SSS	SCL4163	
	Toshiba	TC40163	
HEF4017	Fairchild	F4017	
	Hitachi	HD14017	
	Motorola	MC14017	
	National	CD4017	
	RCA	CD4017	
	SGS	HCF4017	
	SSS	SCL4017	
		(Continued)	
HEF4017	Solitron	CM4017	
	Toshiba	TC4017	
HEF40174	Fairchild	F40174	
	Hitachi	HD14174	
	Motorola	MC14174	
	National	CD40174	
		MM54C174	
		MM74C174	
	RCA	CD40174	
	SGS	HCF40174	
	SSS	SCL4174	
	Toshiba	TC40174	
HEF40175	Fairchild	F40175	
	Hitachi	HD14175	
	Motorola	MC14175	
	National	CD40175	
		MM54C175	
		MM74C175	
	Toshiba	TC40175	
HEF4018	Fairchild	F4018	
	Hitachi	HD14018	
	Motorola	MC14018	
	National	CD4018	
	RCA	CD4018	
	SGS	HCF4018	
	SSS	SCL4018	
	Solitron	CM4018	
	Toshiba	TC4018	
HEF4019	Fairchild	F4019	
	National	CD4019	
	OKI	MSM4019	
	RCA	CD4019	
	Sanyo	LC4019	
	SGS	HCF4019	
	SSS	SCL4019	
	Solitron	CM4019	
	Toshiba	TC4019	
HEF40192	Fairchild	F4029	
	Motorola	MC14029	
	National	CD40192	
		CD4029	
	RCA	CD40192	
		CD4029	
	SGS	HCF40192	
		HCF4029	
	SSS	SCL4029	
		SCL4192	
	Solitron	CM4029	
	Toshiba	TC40192	
		TC4029	
HEF40193	Fairchild	F40193	
	National	CD40193	
		MM54C193	
		MM74C193	
	RCA	CD40193	
	SGS	HCF40193	
	SSS	SCL4193	
	Toshiba	TC40193	
HEF40194	Fairchild	F40194	
	Hitachi	HD14194	
	Motorola	MC14194	
	RCA	CD40194	
	SGS	HCF40194	
HEF4020	Fairchild	F4020	
	Hitachi	HD14020	
	Motorola	MC14020	
	National	CD4020	
	RCA	CD4020	
	SGS	HCF4020	
	SSS	SCL4020	
	Solitron	CM4020	
	Toshiba	TC4020	
HEF4021	Fairchild	F4021	
	Hitachi	HD14021	
	Motorola	MC14021	
	National	CD4021	
	RCA	CD4021	
	SGS	HCF4021	
	SSS	SCL4021	
	Toshiba	TC4021	
HEF4022	Fairchild	F4022	
	Hitachi	HD14022	
	Motorola	MC14022	
	National	CD4022	
	RCA	CD4022	
	SGS	HCF4022	
	SSS	SCL4022	
	Solitron	CM4022	
	Toshiba	TC4022	
HEF4023	Fairchild	F4023	
	Hitachi	HD14023	
	Motorola	MC14023	
		(Continued)	
HEF4023	National	CD4023	
		MM74C10	
	RCA	CD4023	
	SGS	HCF4023	
	SSS	SCL4023	
	Solitron	CM4023	
	Toshiba	TC4023	
HEF4024	Fairchild	F4024	
	Hitachi	HD14024	
	Motorola	MC14024	
	National	CD4024	
	RCA	CD4024	
	SGS	HCF4024	
	SSS	SCL4024	
	Solitron	CM4024	
	Toshiba	TC4024	
HEF4025	Fairchild	F4025	
	Hitachi	HD14025	
	Motorola	MC14025	
	National	CD4025	
	RCA	CD4025	
	SGS	HCF4025	
	SSS	SCL4025	
	Solitron	CM4025	
	Toshiba	TC4025	
HEF4027	Fairchild	F4027	
	Hitachi	HD14027	
	Motorola	MC14027	
	National	CD4027	
		MM74C76	
	OKI	MSM4027	
	RCA	CD4027	
	Sanyo	LC4027	
	SGS	HCF4027	
	SSS	SCL4027	
	Solitron	CM4027	
HEF4028	Fairchild	F4028	
	Hitachi	HD14028	
	Motorola	MC14028	
	National	CD4028	
		MM74C42	
	OKI	MSM4028	
	Sanyo	LC4028	
	SGS	HCF4028	
	SSS	SCL4028	
	Solitron	CM4028	
	Toshiba	TC4028	
HEF4030	Fairchild	F4030	
	National	CD4030	
	RCA	CD4030	
	SGS	HCF4030	
	SSS	SCL4030	
	Solitron	CM4030	
	Toshiba	TC4030	
HEF4035	Fairchild	F4035	
	Hitachi	HD14035	
	Motorola	MC14035	
	RCA	CD4035	
	SGS	HCF4035	
	Solitron	CM4035	
	Toshiba	TC4035	
HEF4040	Fairchild	F4040	
	Hitachi	HD14040	
	Motorola	MC14040	
	National	CD4040	
	RCA	CD4040	
	SGS	HCF4040	
	SSS	SCL4040	
	Solitron	CM4040	
	Toshiba	TC4040	
HEF4041	Fairchild	F4041	
	National	CD4041	
	RCA	CD4041	
	SGS	HCF4041	
	SSS	SCL4041	
	Solitron	CM4041	
HEF4042	Fairchild	F4042	
	Hitachi	HD14042	
	Motorola	MC14042	
	National	CD4042	
	RCA	CD4042	
	SGS	HCF4042	
	SSS	SCL4042	
	Solitron	CM4042	
	Toshiba	TC4042	
HEF4043	Hitachi	HD14043	
	Motorola	MC14043	
	National	CD4043	
	RCA	CD4043	
	SGS	HCF4043	
	SSS	SCL4043	
		(Continued)	
HEF4043	Solitron	CM4043	
	Toshiba	TC4043	
HEF4044	Fairchild	F4044	
	Hitachi	HD14044	
	Motorola	MC14044	
	National	CD4044	
	RCA	CD4044	
	SGS	HCF4044	
	Solitron	CM4044	
	Toshiba	TC4044	
HEF4047	Fairchild	F4047	
	National	CD4047	
	RCA	CD4047	
	SGS	HCF4047	
	SSS	SCL4047	
	Solitron	CM4047	
	Toshiba	TC4047	
HEF4049	Fairchild	F4049	
	Hitachi	HD14049	
	Motorola	MC14049	
	National	CD4049	
	OKI	MSM4049	
	RCA	CD4049	
	Sanyo	LC4049	
	SGS	HCF4049	
	SSS	SCL4049	
	Solitron	CM4049	
	Toshiba	TC4049	
HEF4050	Fairchild	F4050	
	Hitachi	HD14050	
	Motorola	MC14050	
	National	CD4050	
	RCA	CD4050	
	SGS	HCF4050	
	SSS	SCL4050	
	Solitron	CM4050	
	Toshiba	TC4050	
HEF4051	Fairchild	F4051	
	Hitachi	HD14051	
	Motorola	MC14051	
	National	CD4051	
	RCA	CD4051	
	SGS	HCF4051	
	SSS	SCL4051	
	Solitron	CM4051	
	Toshiba	TC4051	
HEF4052	Fairchild	F4052	
	Motorola	MC14052	
	RCA	CD4052	
HEF4053	Fairchild	F4053	
	Hitachi	HD14053	
	Motorola	MC14053	
	National	CD4053	
	RCA	CD4053	
	SGS	HCF4053	
	SSS	SCL4053	
	Solitron	CM4053	
	Toshiba	TC4053B	
HEF4059	Hitachi	HD14569	
	Motorola	MC14569	
	RCA	CD4059	
HEF4060	Motorola	MC14060	
	National	CD4060	
	RCA	CD4060	
	SGS	HCF4060	
	SSS	SCL4060	
HEF4066	Fairchild	F4016	
		F4066	
	Hitachi	HD14016	
		HD14066	
	Motorola	MC14016	
		MC14066	
	National	CD4016	
		CD4066	
	RCA	CD4016	
		CD4066	
	Sanyo	LC4016	
		LC4066	
	SGS	HCF4016	
		HCF4066	
	Signetics	**HEF4016**	**864**
	SSS	SCL4016	
		SCL4066	
	Solitron	CM4016	
		CM4066	
		HCF4016	
	Toshiba	TC4016	
		TC4066	
HEF4067	Fairchild	F4067	
	Motorola	MC14067	
	RCA	CD4067	
	SGS	HCF4067	

◆ Discontinued

Bold face device numbers indicate manufacturers data is provided in the IC Master on the pages noted.

© IC MASTER 1984

Signetics (Cont'd)

Manufacturer Device	Replacement Source	Device	IC Master Page
HEF4068	Fairchild	F4068	
	Hitachi	HD14068	
	Motorola	MC14068	
	RCA	CD4068	
	SGS	HCF4068	
	SSS	SCL4068	
	Solitron	CM4068	
	Toshiba	TC4068	
HEF4069	Fairchild	F4069	
	Hitachi	HD14069	
	Motorola	MC14069	
	National	CD4069	
		MM54C04	
		MM74C04	
	OKI	MSM4069	
	RCA	CD4069	
	Sanyo	LC4069	
	SGS	HCF4069	
	SSS	SCL4069	
		SCL4449	
	Solitron	CM4069	
	Toshiba	TC4069	
HEF4070	Fairchild	F4070	
	Hitachi	HD14070	
	Motorola	MC14070	
	National	CD4070	
		MM74C86	
	RCA	CD4070	
	SGS	HCF4070	
	SSS	SCL4070	
	Solitron	CM4070	
HEF4071	Fairchild	F4071	
	Hitachi	HD14071	
	Motorola	MC14071	
	National	CD4071	
		MM74C32	
	OKI	MSM4071	
	RCA	CD4071	
	Sanyo	LC4071	
	SGS	HCF4071	
	SSS	SCL4071	
	Solitron	CM4071	
	Toshiba	TC4071	
HEF4072	Fairchild	F4072	
	Hitachi	HD14072	
	Motorola	MC14072	
	National	CD4072	
	RCA	CD4072	
	SGS	HCF4072	
	SSS	SCL4072	
	Toshiba	TC4072	
HEF4073	Fairchild	F4073	
	Hitachi	HD14073	
	Motorola	MC14073	
	National	CD4073	
	RCA	CD4073	
	SGS	HCF4073	
	SSS	SCL4073	
	Solitron	CM4073	
	Toshiba	TC4073	
HEF4075	Fairchild	F4075	
	Hitachi	HD14075	
	Motorola	MC14075	
	National	CD4075	
	RCA	CD4075	
	SGS	HCF4075	
	SSS	SCL4075	
	Solitron	CM4075	
	Toshiba	TC4075	
HEF4076	Fairchild	F4076	
	Hitachi	HD14076	
	Motorola	MC14076	
	National	CD4076	
		MM54C173	
		MM74C173	
	RCA	CD4076	
	SGS	HCF4076	
	SSS	SCL4076	
	Solitron	CM4076	
	Toshiba	TC4076	
HEF4077	Fairchild	F4077	
	Hitachi	HD14077	
	Motorola	MC14077	
	National	CD4077	
	RCA	CD4077	
	SGS	HCF4077	
	SSS	SCL4077	
	Solitron	CM4077	
HEF4078	Fairchild	F4078	
	Hitachi	HD14078	

(Continued)

Manufacturer Device	Replacement Source	Device	IC Master Page
HEF4078	Motorola	MC14078	
	RCA	CD4078	
	SGS	HCF4078	
	SSS	SCL4078	
	Solitron	CM4078	
	Toshiba	TC4078	
HEF4081	Fairchild	F4081	
	Hitachi	HD14081	
	Motorola	MC14081	
	National	CD4081	
		MM74C08	
	OKI	MSM4081	
	RCA	CD4081	
	Sanyo	LC4081	
	SGS	HCF4081	
	SSS	SCL4081	
	Solitron	CM4081	
	Toshiba	TC4081	
HEF4082	Fairchild	F4082	
	Hitachi	HD14082	
	Motorola	MC14082	
	National	CD4082	
	RCA	CD4082	
	SGS	HCF4082	
	SSS	SCL4082	
	Toshiba	TC4082	
HEF4085	Fairchild	F4085	
	National	CD4085	
	RCA	CD4085	
	SGS	HCF4085	
	SSS	SCL4085	
	Toshiba	TC4085	
HEF4086	Fairchild	F4086	
	RCA	CD4086	
	SGS	HCF4086	
	SSS	SCL4086	
	Toshiba	TC4086	
HEF4093	Fairchild	F4093	
	Hitachi	HD14093	
	Motorola	MC14093	
	National	CD4093	
	OKI	MSM4093	
	RCA	CD4093	
	Sanyo	LC4093	
	SGS	HCF4093	
	SSS	SCL4093	
	Toshiba	TC4093	
HEF4104	Fairchild	F4104	
	Mitel	MD4104	
	Motorola	MC14504	
	National	MM4104	
	RCA	CD40109	
	SGS	HCF40109	
HEF4502	Hitachi	HD14502	
	Motorola	MC14502	
	RCA	CD4502	
	SGS	HCF4502	
	SSS	SCL4502	
HEF4505	Motorola	MC14505	
HEF4508	Hitachi	HD14508	
		HD74147	
	Motorola	MC14508	
	National	DM74147	
	RCA	CD4508	
	SGS	HCF4508	
	Signetics	**74147**	**861**
		N82147	
	SSS	SCL4508	
	Solitron	CM4508	
	TI	**SN74147**	**970**
	Toshiba	TC4508	
HEF4510	Fairchild	F4510	
	Hitachi	HD14510	
	Motorola	MC14510	
	National	CD4510	
	RCA	CD4510	
	SGS	HCF4510	
	SSS	SCL4510	
	Solitron	CM4510	
	Toshiba	TC4510	
HEF4511	Fairchild	F4511	
	Hitachi	HD14511	
	Mitel	MD4511	
	MMI	4511	
	Motorola	MC14511	
	National	CD4511	
	NEC	μPD4511	
	RCA	CD4511	
	SGS	HCF4511	
	SSS	SCL4511	
	Solitron	CM4511	
	Toshiba	TC4511	

Manufacturer Device	Replacement Source	Device	IC Master Page
HEF4514	Fairchild	F4514	
	Hitachi	HD14514	
	Motorola	MC14514	
	National	CD4514	
	RCA	CD4514	
	SGS	HCF4514	
	SSS	SCL4514	
	Solitron	CM4514	
	Toshiba	TC4514	
HEF4515	Fairchild	F4515	
	Hitachi	HD14515	
	Motorola	MC14515	
	National	CD4515	
	RCA	CD4515	
	SGS	HCF4515	
	SSS	SCL4515	
	Solitron	CM4515	
	Toshiba	TC4515	
HEF4516	Fairchild	F4516	
	Hitachi	HD14516	
	Motorola	MC14516	
	National	CD4516	
	RCA	CD4516	
	SGS	HCF4516	
	SSS	SCL4516	
	Solitron	CM4516	
	Toshiba	TC4516	
HEF4517	Hitachi	HD14517	
	Motorola	MC14517	
	RCA	CD4517	
	SSS	SCL4517	
HEF4518	Fairchild	F4518	
	Hitachi	HD14518	
	Motorola	MC14518	
	National	CD4518	
	RCA	CD4518	
	SGS	HCF4518	
	SSS	SCL4518	
	Solitron	CM4518	
	Toshiba	TC4518	
HEF4519	Hitachi	HD14519	
		HD4519	
	Motorola	MC14519	
	National	CD4519	
	RCA	CD4519	
HEF4520	Fairchild	F4520	
	Hitachi	HD14520	
	Motorola	MC14520	
	National	CD4520	
	OKI	MSM4520	
	RCA	CD4520	
	Sanyo	LC4520	
	SGS	HCF4520	
	SSS	SCL4520	
	Solitron	CM4520	
	Toshiba	TC4520	
HEF4521	Fairchild	F4521	
	Motorola	MC14521	
	RCA	CD4045	
	SGS	HCF4045	
	SSS	SCL4445	
	Solitron	CM4045	
	Toshiba	TC4521	
HEF4522	Fairchild	F4522	
	Hitachi	HD14522	
	Motorola	MC14522	
	National	CD4522	
	RCA	CD4522	
	SSS	SCL4522	
	Toshiba	TC4522	
HEF4526	Fairchild	F4526	
	Hitachi	HD14526	
	Motorola	MC14526	
	National	CD4526	
	SSS	SCL4526	
	Toshiba	TC4526	
HEF4527	Fairchild	F4527	
	Hitachi	HD14527	
	Motorola	MC14527	
	National	CD4527	
	RCA	CD4527	
	SGS	HCF4527	
	SSS	SCL4527	
	Toshiba	TC4527	
		TR4527	
HEF4528	Fairchild	F4528	
	Hitachi	HD14528	
	Motorola	MC14528	
	National	CD4528	
		MM74C221	
	RCA	CD4098	
	SGS	HCF4098	

(Continued)

Manufacturer Device	Replacement Source	Device	IC Master Page
HEF4528	SSS	SCL4528	
	Toshiba	TC4528	
HEF4531	Fairchild	F4531	
	Hitachi	HD14531	
	Motorola	MC14531	
	RCA	CD40101	
	SGS	HCF40101	
	SSS	SCL4531	
	Toshiba	TC4531	
HEF4532	Fairchild	F4532	
	Hitachi	HD14532	
	Motorola	MC14532	
	RCA	CD4532	
	SGS	HCF4532	
	SSS	SCL4532	
	Toshiba	TC4532	
HEF4534	Hitachi	HD14534	
	Motorola	MC14534	
HEF4538	Motorola	MC14538	
	National	CD4538	
	OKI	MSM4538	
HEF4539	Fairchild	F4539	
	Hitachi	HD14539	
	Motorola	MC14539	
	Toshiba	TC4539	
HEF4543	Fairchild	F4543	
	Hitachi	HD14543	
	Motorola	MC14543	
	National	CD4543	
	RCA	CD4543	
	Toshiba	TC4543	
HEF4555	Fairchild	F4555	
	Hitachi	HD14555	
	Motorola	MC14555	
	RCA	CD4555	
	SGS	HCF4555	
	SSS	SCL4555	
	Toshiba	TC4555	
HEF4556	Fairchild	F4556	
	Motorola	MC14556	
	RCA	CD4556	
	SGS	HCF4556	
	SSS	SCL4556	
	Toshiba	TC4556	
HEF4557	Fairchild	F4557	
	Hitachi	HD14557	
	Motorola	MC14557	
HEF4585	Fairchild	F40085	
	Hitachi	HD14585	
	Motorola	MC14585	
	National	MM74C85	
	RCA	CD4585	
	SSS	SCL4585	
	Toshiba	TC4585	
HEF4591	Motorola	MC14541B	
	RCA	**CD4541B**	**839**
HEF4720	Fairchild	F4720	
HEF4724	Fairchild	F4727	
HEF4731	Fairchild	F4031	
	National	CD4031	
	RCA	CD4031	
	SGS	HCF4031	
INS2652	National	INS2652	
ISP-8A/600	National	INS8060	
		ISP-8A/600	
◆LF155	AMD	LF155	
	Intersil	LF155	
	Motorola	LF155	
	National	LF155	
	PMI	OP-15	
		PM155	
	Thomson-CSF		
		TDC0155	
◆LF156	AMD	LF156	
	Intersil	LF156	
	MicroPwr	OP-16	
	National	LF156	
	PMI	OP-16	
		PM156	
	Thomson-CSF		
		TDC0156	
LF157	AMD	LF157	
	Intersil	LF157	
	MicroPwr	OP-17	
	National	LF157	
	PMI	OP-17	
		PM157	
	Thomson-CSF		
		TDC0157	
◆LF355	AMD	LF355	
	Intersil	LF355	
	Motorola	LF355	

(Continued)

◆ Discontinued

The manufacturers report their devices can be used as direct replacements.
Performance details often differ, so compare the specifications considering your requirements.

Signetics (Cont'd)

Manufacturer Device	Replacement Source	Device	IC Master Page
◆LF355	National	LF355	
	PMI	PM355	
LF356	AMD	LF356	
	Intersil	LF356	
	Motorola	LF356	
	National	LF356	
	PMI	PM356	
◆LH2101	AMD	LH2101	
	Intersil	LH2101	
	National	LH2101	
	Raytheon	LH2101	
◆LH2308	Intersil	LH2308	
	National	LH2308	
	PMI	PM2308	
◆LM101	AMD	LM101	
	AD	AD101	
	Fairchild	μA101	
	Intersil	AD101	
	LinearTech	LM101	
	Motorola	LM101	
	Raytheon	LM101	
	SiliconG	SG101	
	TI	LM101	
	Thomson-CSF		
		SFC2101	
LM108	AMD	LM108	
	AD	**AD108**	**3351**
	~~Fairchild~~	~~μA108~~	
		μA725	
	Intel	ISBC108	
	Intersil	ICL108	
		LM108	
	LinearTech	LM108	
		LM108A	
		OP-05	
	MicroPwr	MP5501	
		MP5505	
		MPLM108A	
		OP-08	
	Motorola	LM108	
	National	LM108	
		LM108A	
	NEC	μPC154	
	PMI	OP-01	
		OP-05	**3566**
		OP-06	
		OP-07	**3566**
		PM108	
		PM725	
	Raytheon	**OP-05**	**3592**
		OP-07	**3592**
		RC725	
		RM725	
LM111	AMD	LM111	
	AD	AD111	
	Fairchild	μA111	
	Intersil	LM111	
	Motorola	LM111	
	National	LM111	
	Raytheon	LM111	
	SiliconG	SG111	
	TI	LM111	
	Thomson-CSF		
		SFC2111	
LM119	AMD	LM119	
	National	LM119	
LM124A	AMD	LM124A	
	Motorola	LM124A	
	National	LM124A	
	RCA	CA124A	
	SiliconG	SG124	
	TI	LM124A	
LM139	AMD	LM139	
	Fairchild	μA139	
	Motorola	LM139	
	National	LM139	
	PMI	CMP-04	
		PM139	
	Raytheon	LM139	
	RCA	**CA139**	**3599**
	SiliconG	SG139	
	TI	LM139	
LM158	Motorola	LM158	
	National	LM158A	
	~~Raytheon~~	~~RM4139~~	
	RCA	CA158A	
	TI	LM158	
LM1870	National	LM1870	
LM193	~~Fairchild~~	~~μA193~~	
	Motorola	LM193	

(Continued)

Manufacturer Device	Replacement Source	Device	IC Master Page
LM193	National	LM193A	
	TI	LM193	
◆LM201	AMD	LM201	
	AD	AD201	
	Fairchild	μA201	
		μA748	
	Intersil	LM748	
		μA748	
	Motorola	LM201	
		MC1748	
	National	LM201	
		LM748	
	Plessey	SL748	
	RCA	CA201	
		CA748	
		LM748	
	SiliconG	SG201	
		SG748	
	TI	LM201	
		SN72748P	
		μA748	
	Thomson-CSF		
		SFC2201	
		SFC2748	
LM211	AMD	LM211	
	AD	AD211	
	Motorola	LM211	
	National	LM211	
	RCA	LM211	
	~~SiliconG~~	~~SG211~~	
	TI	LM211	
	Thomson-CSF		
		SFC2211	
LM219	AMD	LM219	
	National	LM219	
	Thomson-CSF		
		TDE0119	
LM224	AMD	LM224	
	Fairchild	μA224	
	Motorola	LM224	
	National	LM224	
	Raytheon	LM224	
	RCA	CA224	
	SiliconG	SG224	
	TI	LM224	
	Thomson-CSF		
		TDE0124	
LM239	AMD	LM239	
	Fairchild	μA239	
	Motorola	LM239	
	National	LM239	
	PMI	CMP-04	
		PM239	
	Raytheon	LM239	
	RCA	**CA239**	**3599**
	SiliconG	SG239	
	TI	LM239	
	Thomson-CSF		
		TDE0139	
LM258	Motorola	LM258	
	National	LM258A	
	RCA	CA258A	
	TI	LM258	
	Thomson-CSF		
		TDE0158	
LM2901	Fairchild	μA2901	
		μA3302	
	Motorola	LM2901	
		MC3302	
	National	LM2901	
		LM3302	
	NEC	μPC2901	
	PMI	CMP-04	
	Raytheon	LM2901	
		RC3302	
	RCA	CA3302	
	Signetics	MC3302	
	SiliconG	SG3302	
	TI	LM2901	
		LM3302	
LM2903	AMD	LM311	
	AD	AD311	
	Fairchild	μA2903	
		μA311	
	Intersil	LM311	
	Motorola	LM2903	
		LM311	
	National	LM2903	
		LM311	
	NEC	μPC271	
		μPC311	
	Raytheon	LM311	

(Continued)

Manufacturer Device	Replacement Source	Device	IC Master Page
LM2903	**RCA**	**CA311**	**3598**
		LM311	
	Signetics	LM311	
	SiliconG	SG311	
	TI	LM2903	
		LM311	
	Thomson-CSF		
		SFC2311	
		SFC3111	
LM293	Fairchild	μA293	
	Motorola	LM293	
	National	LM293	
	TI	LM293	
◆LM301	AD	AD301	
	Fairchild	μA301A	
	Intersil	AD301	
	LinearTech	LM301	
		LM301A	
	Motorola	LM301	
	National	LM301	
		LM301A	
	NEC	μPC157	
		μPC301	
	Raytheon	LM301	
	RCA	CA301	
		LM301	
	SiliconG	SG301	
	TI	LM301	
		LM301A	
	Thomson-CSF		
		SFC2301	
	Toshiba	TA7506	
LM311	AMD	LM311	
	AD	AD311	
	Fairchild	μA2903	
		μA311	
	Intersil	LM311	
	Motorola	LM2903	
		LM311	
	National	LM2903	
		LM311	
	NEC	μPC271	
		μPC311	
	Raytheon	LM311	
	RCA	**CA311**	**3598**
		LM311	
	Signetics	LM2903	
	SiliconG	SG311	
	TI	LM2903	
		LM311	
	Thomson-CSF		
		SFC2311	
		SFC3111	
LM319	AMD	LM319	
	National	LM319	
	NEC	μPC319	
LM324	AMD	LM324	
	Exar	**XR3403**	**3378**
		XR3403C	
	Fairchild	μA324	
		μA3403	
	Motorola	LM324	
		MC3403	
	National	LM324	
	NEC	μPC324	
	Raytheon	LM324	
		RC3403	
		RC4137	
	RCA	CA324	
		LM324	
	Sanyo	LA6324	
	Signetics	MC3403	
	SiliconG	SG324	
	TI	LM324	
		MC3403	
	Thomson-CSF		
		TDB0124	
LM358	Motorola	LM358	
	National	LM358A	
	NEC	μPC358	
	RCA	CA358A	
		LM358	
	Sanyo	LA6358	
	Signetics	NE532	
	TI	LM358	
◆LM381	~~National~~	~~LM381~~	
◆LM382	National	LM382	
◆LM387	National	LM387	
LM393	Fairchild	μA393	
	~~Motorola~~	~~LM393~~	
	National	LM393	

(Continued)

Manufacturer Device	Replacement Source	Device	IC Master Page
LM393	Sanyo	LA6393	
	TI	LM393	
MC1408	AMD	AM1408	
		SSS1408	
	AD	AD1408	
		ADDAC-08	
	Datel	DAC-08B	
		DAC-I8BC	
		DAC-IC8B	
		DAC-IC8BC	**2863**
	Fairchild	DAC-08	
		MA0802M	
		μA0801	
		μA0802	
	Motorola	**DAC-08**	**3069**
		MC1408	
	National	DAC0800	
		DAC0801	
		DAC0802	
		DAC0806	
		DAC0807	
		DAC0808	
	NEC	μPC624	
	PMI	DAC-08	
		DAC-1408	
	Raytheon	**DAC-08**	**3591**
◆MC1456	**Datel**	**AM-460-2**	**2864**
	Harris	HA-2605	
	Intersil	HA2605	
	Motorola	MC1456	
	SiliconG	SG1456	
	TI	MC1456	
MC1458	AMD	AM1458	
	Exar	XR1458	
		XR4558	
	Fairchild	μA1458	
	Harris	HA-2655	
	Hitachi	HA17458	
	MicroPwr	MPOP14	
	Motorola	MC1458	
		MC4558C	
		RC4558	
	National	LM1458	
	NEC	μPC1458	
		μPC4558	
	PMI	PM1458	
	Raytheon	RC1458	
		RC4558	**3592**
	RCA	CA1458	
		LM1458	
		RC4558	
		SSS1458	
	Sanyo	LA6458A	
	Signetics	NE4558	
	SiliconG	SG1458	
	TI	MC1458	
		RC4558	
MC1488	AMD	MC1488	
	Exar	**XR1488**	**3384**
	Fairchild	μA1488	
	Hitachi	HD75188	
	Motorola	**MC1488**	**3064**
	National	DS1488	
	Raytheon	RM1488	
	SiliconG	SG1488	
	TI	MC1488	
		SN75188	
MC1489	AMD	MC1489	
	Exar	XR1489	
	Fairchild	μA1489	
	Hitachi	HD75189	
	Motorola	**MC1489**	**3064**
	National	DS1489	
	SiliconG	SG1489	
	TI	SN75189	
		SN85189	
MC1489A	**Exar**	**XR1489A**	**3384**
	Fairchild	μA1489A	
	Motorola	**MC1489A**	**3064**
	National	DS1489A	
	SiliconG	SG1489A	
	TI	MC1489A	
		SN75189A	
MC1496	Fairchild	μA796	
	Motorola	MC1496	
	National	LM1496	
	Plessey	SL1496	
	SiliconG	SG1496	
MC1508	**Datel**	**DAC-IC8BM**	**2863**
	~~Motorola~~	~~MC1508~~	
	PMI	DAC-1508	

(Continued)

◆ Discontinued

Bold face device numbers indicate manufacturers data is provided in the IC Master on the pages noted.

Signetics (Cont'd)

Manufacturer Device	Replacement Source	Device	IC Master Page
MC1508	Signetics	SE5008	
		SE5009	
◆MC1556	**Harris**	**HA-2600**	**3406**
	Intersil	HA2600	
	Motorola	MC1556	
	SiliconG	SG1556	
	TeledyneP	1326	
	TI	MC1556	
MC1558	AMD	AM1558	
	Exar	XR1558	
	Fairchild	μA1558	
	Harris	**HA-2650**	**3414**
	Motorola	MC1558	
		MC4558	
		RC1558	
	National	LM1558	
	PMI	**OP-14**	**3566**
		PM1558	
	Raytheon	RC1558	
		RM1558	
		RM4558	
	RCA	CA1558	
		LM1558	
		SSS1558	
	SiliconG	SG1558	
	TI	MC1558	
		RM4558	
MC1596	Motorola	MC1596	
	National	LM1596	
	Plessey	SL1596	
	SiliconG	SG1596	
MC3302	Fairchild	μA2901	
		μA3302	
	Motorola	LM2901	
		MC3302	
	National	LM2901	
		LM3302	
	NEC	μPC2901	
	PMI	CMP-04	
	Raytheon	LM2901	
		RC3302	
	RCA	CA3302	
	Signetics	LM2901	
	SiliconG	SG3302	
	TI	LM2901	
		LM3302	
MC3303	Fairchild	μA3303	
	Motorola	MC3303	
	TI	MC3303	
MC3403	AMD	LM324	
	Exar	**XR3403**	**3378**
		XR3403C	
	Fairchild	μA324	
		μA3403	
	Motorola	LM324	
		MC3403	
	National	LM324	
	NEC	μPC324	
	Raytheon	LM324	
		RC3403	
		RC4137	
	RCA	CA324	
		LM324	
	Sanyo	LA6324	
	Signetics	LM324	
	SiliconG	SG324	
	TI	LM324	
		MC3403	
	Thomson-CSF		
		TDB0124	
MC3410	**Motorola**	**MC3410**	**3069**
MC3503	**Exar**	**XR3503**	**3378**
	Motorola	MC3503	
	Raytheon	RC3503	
		RM3503	
		RM4137	
	SiliconG	SG3503	
	TI	MC3503	
MC3510	**Motorola**	**MC3510**	**3069**
	Signetics	**NE5410**	**3612**
N5111	Motorola	MC1357	
	National	LM2111	
	RCA	CA2111	
	Sprague	ULN-2111	
	TI	SN76642	
		SN76643	
N72HS137	AMD	AM27S33	
	Fairchild	93453C	
	Fujitsu	MB7122	
	Harris	HM7643	

(Continued)

Manufacturer Device	Replacement Source	Device	IC Master Page
N72HS137	Harris	HM7643A	
	MMI	5353-1	
		6353-1	
	Motorola	**MCM7643**	**4047**
	National	**DM74S573**	**4057**
	Signetics	**N82S137**	**4172**
		S82S195	**4182**
	TI	**TBP24S41**	
			542,4239
N8202	Raytheon	RC8202	
N82147	Hitachi	HD14508	
		HD74147	
	Motorola	MC14508	
	National	DM74147	
	RCA	CD4508	
	SGS	HCF4508	
	Signetics	**74147**	**861**
		HEF4508	
	SSS	SCL4508	
	Solitron	CM4508	
	TI	**SN74147**	**970**
	Toshiba	TC4508	
N82148	Fairchild	9318	
	Hitachi	HD74148	
	National	DM74148	
		DM8318	
	Signetics	**74148**	**861**
	TI	**SN74148**	**971**
N8224	Fairchild	7488	
	Motorola	MC4002	
	National	DM7488	
	Signetics	7488	
	TI	SN7488	
		SN7488A	
N8225	AMD	31L01	
		AM27LS02	
		AM27S02	
		AM3101	
		AM3101A	
		SN7489-1	
	Fairchild	74S289	
	Intel	3101	
	Motorola	MC4064	
	National	DM7589	
	NEC	μPB2089	
		μPB2289	
	Signetics	3101	
		3101A	
		7489	
		S3101	
	TI	**SN7489**	**951**
N8230	Fairchild	9312	
	National	DM8312	
	Raytheon	RC8230	
		RC9312	
	TI	SN29312	
N82320	Fujitsu	MB7141	
	Raytheon	**29670**	**4130**
N8233	Raytheon	RC8233	
N8234	Raytheon	RC8234	
N8242	Fairchild	74LS266	
	Motorola	SN74LS266	
	National	DM74LS266	
	Raytheon	RC8242	
	SGS	T74LS266	
	Signetics	74LS266	
	TI	**SN74LS266**	**1007**
N8243	Raytheon	RC8243	
N8250	Raytheon	RC8250	
N8252	Fairchild	9031	
		9301	
	National	DM8301	
		DM9301	
	Raytheon	RC8252	
		RM8252	
	Signetics	S8252	
	TI	SN29301	
		SN39301	
N8262	Raytheon	RC8262	
N8266	Raytheon	RC8266	
N8271	Fairchild	74179	
	Raytheon	RC8271	
	TI	**SN74179**	**985**
N8273	Raytheon	RC8273	
N8274	Raytheon	RC8274	
N8277	Fairchild	9328	
	Raytheon	RC8277	
N8280	Fairchild	74176	
		96176	
	National	DM74176	
		DM8280	
	Raytheon	RC8280	

(Continued)

Manufacturer Device	Replacement Source	Device	IC Master Page
N8280	Signetics	74176	
	TI	**SN74176**	**984**
N8281	Fairchild	74177	
	National	DM74177	
		DM8281	
	Raytheon	RC8281	
	Signetics	74177	
	TI	**SN74177**	**984**
N82HS181	AMD	AM27PS181	
		AM27S181	
		AM27S281	
	Fairchild	93Z451	
		F93451	
	Fujitsu	MB7132	
	Harris	HM7681	
	Hitachi	HN25089	
	Intel	3628	
		3628A	
		3628B	
	MMI	6381-1	
	Motorola	**MCM7681**	**4047**
	National	**DM87S181**	**4057**
		DM87S228	
	NEC	μPB417	
	Raytheon	29631	
		29631A	**4131**
		29633	
	Signetics	825181	
		N82S181	
	Supertex	SM82S181	
	TI	TBP28S86	
N82HS185	AMD	AM27S185	
	Fujitsu	MB7128	
	Harris	HM7685	
	Hitachi	HN25085	
	MMI	6389	
		6389-1	
		63S841	**4026**
	Motorola	**MCM7685**	**4047**
	National	**DM87S185**	**4057**
	Raytheon	29651	
		29651A	**4131**
	Signetics	N82S185	
	TI	**TBP24S81**	
			542,4239
N82HS195	AMD	AM27PS185	
	Fujitsu	MB7134	
		MB7152	
	Harris	HM76165	
	MMI	**63S441**	**4026**
	Motorola	**MCM76165**	**4047**
	NEC	μPB426	
	Raytheon	29653	
	Signetics	**N82S195**	**4182**
N82LS181	Fairchild	93L451	
	Signetics	S82LS181	
	TI	**TBP28L86**	
			542,543,4242
N82S09	Fairchild	93419	
	Signetics	**S82S09**	**532**
N82S10	AMD	AM93415	
	AMI	4015	
	Fairchild	93415	
	Fujitsu	MBM93415	
	Hitachi	HM2510	
		HM2511	
	Intel	2115A	
	Motorola	MCM2115	
	Signetics	S82S10	
	TI	SN54S314	
		SN74S314	
N82S100	Fairchild	93459	
	Signetics	**S82S100**	**532,4153**
N82S101	Fairchild	93458	
	Signetics	**S82S101**	**532,4153**
N82S115	AMD	AM27S15	
	Harris	HM7647R	
N82S116	AMD	AM27LS00	
	Fairchild	93421	
		93L420	
		93L421	
	Intel	3106	
	Motorola	MC4256	
	National	93L420	
		93L421	
		DM74S200	
	NEC	μPB2200	
	Signetics	74200	
		N82S16	
	TI	SN74LS200	
		SN74S200	
		SN74S201	**993**

Manufacturer Device	Replacement Source	Device	IC Master Page
N82S123	AMD	AM27LS19	
		AM27S19	
	Harris	HM7603	
	MMI	5331-1	
		53S081	**4026**
		6331-1	
		63S081	**4026**
	National	**DM74S288**	**4057**
		DM8578	
	Signetics	**S82S123**	**532**
	TI	**TBP18S030**	
			542,4237
N82S126	AMD	AM27S20	
	Fairchild	93417	
	Harris	HM7610	
	MMI	6300-1	
		63S140	**4026**
	National	**DM74S387**	**4057**
	TI	**TBP24SA10**	
			542,4238
N82S129	AMD	AM27S11	
		AM27S21	
	Harris	HM7611	
	Intersil	IM5623	
	MMI	6301-1	
		63S141	**4026**
	National	**DM74S287**	**4057**
	TI	**TBP24S10**	
			542,4238
N82S130	AMD	AM27S12	
	Fairchild	93436	
	Harris	HM7620	
	MMI	6305-1	
		63S240	**4026**
	National	**DM74S570**	**4057**
N82S131	AMD	AM27S13	
	Fairchild	93446	
	Harris	HM7621	
	Intel	3622	
	MMI	6306-1	
		63S241	**4026**
	Motorola	**MCM7621**	**4047**
	National	**DM74S571**	**4057**
	Raytheon	**29611**	**4131**
	TI	SN74S571	
N82S136	AMD	AM27S32	
	Fairchild	93452	
	Fujitsu	MB7121	
	Harris	HM7642	
	Hitachi	HN25044	
	MMI	6352-1	
	Motorola	MCM7642	
	National	**DM74S572**	**4057**
	NEC	μPB406	
	TI	**TBP24SA41**	**4239**
N82S137	AMD	AM27S33	
	Fairchild	93453C	
	Fujitsu	MB7122	
	Harris	HM7643	
		HM7643A	
	MMI	5353-1	
		6353-1	
	Motorola	**MCM7643**	**4047**
	National	**DM74S573**	**4057**
	Signetics	N72HS137	
		S82S195	**4182**
	TI	**TBP24S41**	
			542,4239
N82S140	AMD	AM27S30	
	Fairchild	93438	
	Harris	HM7640	
	MMI	6340-1	
	National	**DM74S475**	**4057**
		DM77S475	
		DM87S475	
	TI	**TBP28SA46**	**4245**
N82S141	AMD	AM27S31	
	Fairchild	93448	
	Fujitsu	MB7126	
	Harris	HM7641	
	MMI	6341-1	
	Motorola	**MCM7641**	**4047**
	National	**DM74S474**	**4057**
	TI	**TBP28S46**	
			542,543,4245
N82S146	AMD	AM27S28	
	Fujitsu	MB7123	
	MMI	6348-1	
	National	**DM74S473**	**4057**
	TI	**TBP28SA42**	**4245**
N82S147	AMD	AM27S29	
	Fujitsu	MB7124	

(Continued)

◆ Discontinued

The manufacturers report their devices can be used as direct replacements.
Performance details often differ, so compare the specifications considering your requirements.

Signetics (Cont'd)

Manufacturer Device	Replacement Source	Device	IC Master Page
N82S147	Harris	HM7649	
	MMI	6349-1	
	Motorola	**MCM7649**	**4047**
	National	**DM74S472**	**4057**
	Raytheon	**29621**	**4131**
	TI	**TBP28S42**	**542,4244**
		TBP28S42N	**542,4244**
N82S16	AMD	AM27LS00	
	Fairchild	93421	
		93L420	
		93L421	
	Intel	3106	
	Motorola	MC4256	
	National	93L420	
		93L421	
		DM74S200	
	NEC	μPB2200	
	Signetics	74200	
		N82S116	
	TI	SN74LS200	
		SN74S200	
		SN74S201	**993**
N82S17	AMD	AM27LS01	
		AM29720	
	Fairchild	93411	
		93L411	
	Intel	3107	
	National	DM74S206	
		N82S117	
		N82S17	
	Signetics	74S301	
	TI	SN74206	
		SN74S301	**1016**
N82S180	AMD	AM27S180	
		AM27S280	
	Fairchild	93450	
		93Z450	
	Fujitsu	MB7131	
	Hitachi	HN25088	
	Intel	3608	
	MMI	6380-1	
	National	**DM87S180**	**4057**
		DM87S229	
	NEC	μPB408	
	TI	TBP28SA86	
N82S181	AMD	AM27PS181	
		AM27S181	
		AM27S281	
	Fairchild	93Z451	
		F93451	
	Fujitsu	MB7132	
	Harris	HM7681	
	Hitachi	HN25089	
	Intel	3628	
		3628A	
		3628B	
	MMI	6381-1	
	Motorola	**MCM7681**	**4047**
	National	**DM87S181**	**4057**
		DM87S228	
	NEC	μPB417	
	Raytheon	29631	
		29631A	**4131**
		29633	
	Signetics	825181	
		N82HS181	
	Supertex	SM82S181	
	TI	TBP28S86	
N82S184	AMD	AM27S184	
	Fujitsu	MB7127	
	Harris	HM7684	
	Hitachi	HM25045	
	MMI	6388	
		6388-1	
	National	**DM87S184**	**4057**
	TI	**TBP24SA81**	**4240**
N82S185	AMD	AM27S185	
	Fujitsu	MB7128	
	Harris	HM7685	
	Hitachi	HN25085	
	MMI	6389	
		6389-1	
		63S841	**4026**
	Motorola	**MCM7685**	**4047**
	National	**DM87S185**	**4057**
	Raytheon	29651	
		29651A	**4131**
N82S185	Signetics	N82HS185	
	TI	**TBP24S81**	**542,4239**
N82S190	AMD	AM27S190	
	Fairchild	93510	
		93Z510	
	Fujitsu	MB7137	
		MB7137E-W	
	Harris	HM76160	
	Hitachi	HN25168	
	MMI	**63S1681**	**4026**
	Motorola	MCM6160	
	National	**DM87S190**	**4057**
	NEC	μPB409	
	Raytheon	**29683**	**4131**
	TI	TBP28SA166	
N82S191	AMD	AM27PS191	
		AM27S191	
	Fairchild	93511	
		93Z511	
	Fujitsu	MB7138	
		MB7138E-W	
	Harris	HM76161	
	Hitachi	HN25169	
	MMI	**63S1681**	**4026**
	Motorola	**MCM76161**	**4047**
	National	**DM87S191**	**4057**
	NEC	μPB429	
	Raytheon	**29681**	**4131**
		29681A	**4131**
	TI	**TBP28S166**	**4247**
N82S195	AMD	AM27PS185	
	Fujitsu	MB7134	
		MB7152	
	Harris	HM76165	
	MMI	**63S441**	**4026**
	Motorola	**MCM76165**	**4047**
	NEC	μPB426	
	Raytheon	29653	
	Signetics	N82HS195	
N82S212	Fairchild	93479	
	Signetics	**S82S212**	**532**
N82S23	AMD	AM27S18	
	Harris	HM7602	
	MMI	6330-1	
		63S080	**4026**
	National	**DM74S188**	**4057**
		DM7588	
		DM8577	
	TI	TBP18SA030	
		TBPSA030M	
N82S25	Fairchild	7489	
	Hitachi	HD7489	
		HD74S289	
	National	DM7489	
		DM74S289	
		DM8589	
		MM74S289	
	Signetics	74S289	
	TI	SN74S289	
N82S2708	Harris	HM7608	
	Signetics	**S82S2708**	**532**
	TI	**TBP28S2708**	**4248**
N82S291	MMI	5275-1	
	Signetics	N87S290	
N82S321	**AMD**	**AM27S43**	**3908**
	Fujitsu	MB7142	
	Harris	76321	
		HM76321	
	Intel	3632	
	MMI	**53S3281**	**4026**
		63S3281	**4026**
	National	87S321	
		DM87S321	**4057**
	Raytheon	**29671**	**4131**
N82S80	Fairchild	74LS196	
	Hitachi	HD74LS196	
	Motorola	SN74LS196	
	National	DM74LS196	
	TI	**SN74LS196**	**991**
N87S290	MMI	5275-1	
	Signetics	N82S291	
N8T09	Raytheon	RC8T09	
~~N8T10~~	~~Fairchild~~	~~74173~~	
	~~National~~	~~DM74173~~	
		DM8551	
	Raytheon	RC8T10	
	TI	**SN74173**	**982**
N8T125	Motorola	SN74LS640	
	Signetics	74LS640	
	TI	**SN74LS640**	**1074**
N8T13	Motorola	MC8T13	
	National	DS75121	
		LM75121	
	TI	N8T13	
		SN75121	
N8T14	Motorola	MC8T14	
	National	DS75122	
		LM75122	
	TI	N8T14	
		SN75122	
N8T20	Raytheon	RC8T20	
N8T22	Fairchild	74122	
		9601	
	National	DM8601	
		DM9601	
	Raytheon	RF8601	
		RF9601	
	Signetics	S8T22	
	TI	**SN74122**	**961**
N8T23	Motorola	MC8T23	
	National	DS75123	
		LM75123	
	TI	N8T23	
		SN75123	
N8T24	Motorola	MC8T24	
	National	DS75124	
		LM75124	
	TI	N8T24	
		SN75124	
~~N8T245~~	~~Fairchild~~	~~74LS245~~	
	GTEMicro	G74SC245	
	Mitel	MD74SC245	
	MMI	**SN74LS245**	**804**
	Motorola	SN74LS245	
	National	DM74LS245	
	Plessey	MV74SC245	
	SPI	SP74SC245	
	Signetics	74LS245	
	TI	SN74LS245	
N8T25	National	DS3625	
N8T26	Hitachi	HD268T26	
	Motorola	MC6880A	
		MC8T26	
N8T26A	Fairchild	μA8T26A	
	Motorola	MC8T26A	
	National	DS8T26A	
	TI	N8T26A	
N8T28	Motorola	MC8T28	
N8T34	National	DS8834	
N8T3404	Intel	3404	
N8T37	Motorola	MC3437	
	National	DS8837	
N8T38	Motorola	MC3438	
	National	DS8838	
N8T380	National	DS8836	
N8T54	Fairchild	7448	
	National	DM7448	
		DM8848	
	TI	**SN7448**	**935**
		SN7448A	
N8T74	Fairchild	9374	
N8T95	Motorola	MC6885	
		MC8T95	
	National	DM8095	
	TI	SN74365	
N8T96	Motorola	MC6886	
		MC8T96	
	National	DM8096	
	TI	SN74366	
N8T97	Motorola	MC6887	
		MC8T97	
	National	DM8097	
	TI	SN74367	
N8T98	Motorola	MC6888	
		MC8T98	
	National	DM8098	
		DS8674	
	TI	SN74368	
NE4558	AMD	AM1458	
	Exar	XR1458	
		XR4558	
	Fairchild	μA1458	
	Harris	HA-2655	
	Hitachi	HA17458	
	MicroPwr	MPOP14	
	Motorola	MC1458	
		MC4558C	
		RC4558	
	National	LM1458	
	NEC	μPC1458	
		μPC4558	
	PMI	PM1458	
NE4558	Raytheon	RC1458	
		RC4558	**3592**
	RCA	CA1458	
		LM1458	
		RC4558	
		SSS1458	
	Sanyo	LA6458A	
	Signetics	MC1458	
	SiliconG	SG1458	
	TI	MC1458	
		RC4558	
NE5018	AMD	AM6081	
	Datel	DAC-UP8B	
	Signetics	**NE5019**	**3607**
		NE5118	
		NE5119	**3611**
NE5019	AMD	AM6081	
	Datel	DAC-UP8B	
	Signetics	NE5018	
		NE5118	
		NE5119	**3611**
NE5020	Datel	DAC-UP10	
NE5118	AMD	AM6081	
	Datel	DAC-UP8B	
	Signetics	NE5018	
		NE5019	**3607**
		NE5119	**3611**
NE5119	AMD	AM6081	
	Datel	DAC-UP8B	
	~~Signetics~~	~~NE5018~~	
		NE5019	**3607**
		NE5118	
NE529	National	LM361	
NE531	Raytheon	RC4531	
NE532	Motorola	LM358	
	National	LM358A	
	NEC	μPC358	
	RCA	CA358A	
		LM358	
	Sanyo	LA6358	
	Signetics	LM358	
	TI	LM358	
NE5410	**Motorola**	**MC3510**	**3069**
	Signetics	MC3510	
NE5532	**Exar**	**XR5532**	**3378**
	Signetics	**NE5532A**	**3644,3644**
		SE5532	**526,3644**
		SE5532A	**526,3644,3644**
	TI	NE5532	
		NE5532A	
NE5532A	**Exar**	**XR5532**	**3378**
	Signetics	**NE5532**	**3644**
		SE5532	**526,3644**
		SE5532A	**526,3644,3644**
	TI	NE5532	
		NE5532A	
NE5533	**Exar**	**XR5533**	**3379**
	Signetics	**NE5533A**	**3646**
	TI	NE5533	
NE5533A	**Exar**	**XR5533**	**3379**
	Signetics	**NE5533**	**3646**
	TI	NE5533	
NE5534	**Datel**	**AM-453-2C**	**2864**
	Exar	**XR5534**	**3379**
	Raytheon	**RC5534**	**3592**
	Signetics	**NE5534A**	**3646**
	TI	NE5534	
		NE5534A	
NE5534A	**Datel**	**AM-453-2C**	**2864**
	Exar	**XR5534**	**3379**
	Raytheon	**RC5534**	**3592**
	Signetics	NE5534	
	TI	NE5534	
		NE5534A	
NE5537	Fairchild	μAF398	
	National	LF398	
		LM298	
	PMI	SMP-10	
NE5539	**Harris**	**HA-2539**	**3402**
	TeledyneP	1342	
NE555	Cherry	CS555	
	Exar	XR555	
	Fairchild	μA555	
	Hitachi	HA17555	
	Motorola	MC1455	
	National	LM555	
	NEC	μPC1555	
	Raytheon	RC555	
	RCA	CA355	

(Continued)

~~Discontinued~~

Bold face device numbers indicate manufacturers data is provided in the IC Master on the pages noted.

© IC MASTER 1984

Signetics (Cont'd)

Manufacturer Device	Replacement Source	Device	IC Master Page
NE555	**RCA**	**CA555**	**3604**
	Sanyo	LB8555	
	SiliconG	SG555	
	TI	NE555	
NE556	AMD	LM556	
	Exar	XR556	
		XR556M	
	Fairchild	μA556	
	Motorola	MC3456	
		MC3556	
	National	LM556	
	Raytheon	RC556	
		RM556	
	Signetics	**SE556**	**526**
	~~SiliconG~~	~~SG556~~	
	TI	NE556	
		SE556	
NE5560	Ferranti	ZN1060	
	Philips	TDA1060	
	Signetics	TDA1060	
	Sprague	ULN-8160	
NE5561	Sprague	ULN-8161	
NE5562	Sprague	ULN-8162	
NE5563	Sprague	ULN-8163	
NE558	Exar	XR558	
	Signetics	**SE558**	**3670**
NE5602	Exar	XR2002	
		XR2202	
	Fairchild	9666	
		MC1412	
	Motorola	**MC1412**	**3064**
		ULN2002	
	NEC	μPA2002	
	RIFA	PBD352304	
	Sanyo	LB1232	
	SGS	L202	
	Sprague	ULN-2002	
		ULQ-2003	
	TI	ULN2002	
	Toshiba	TD62002	
NE5603	Exar	XR2003	
		XR2004	
		XR2203	
	Fairchild	9667	
		MC1413	
	Mitsubishi	M54523	
	Motorola	**MC1413**	**3064**
		ULN2003	
	Sanyo	LB1233	
	SGS	L203	
	Signetics	ULN2003	
	SiliconG	SG2003	
	Sprague	ULN-2003	
		ULQ-2003	
		ULQ-2004	
		ULS-2003	
		ULS-2004	
	TI	ULN2003	
	Toshiba	TD62003	
NE5604	Exar	XR2204	
	Fairchild	9668	
	Mitsubishi	M54526	
	Motorola	**MC1416**	**3064**
		ULN2004	
	Sanyo	LB1234	
	SGS	L204	
	Signetics	ULN2004	
	SiliconG	SG2004	
	Sprague	ULN-2004	
		ULS2004	
	TI	ULN2004	
	Toshiba	TD62004	
NE565	National	LM565	
	Signetics	SE565	
NE566	National	LM566	
	Signetics	SE566	
NE567	**Exar**	**XR2567**	**3367**
		XR567	
	MCE	MCE-567	
	National	LM567	
	Signetics	SE567	
NE592	Intersil	NE592	
OM200	Panasonic	OM200	
~~PCF54HC00~~	~~Motorola~~	~~MC54HC00~~	
	National	MM54HC00	
	RCA	**CD54HC00**	**842**
PCF54HC02	Motorola	MC54HC02	
	National	MM54HC02	
	RCA	**CD54HC02**	**842**
PCF54HC04	Motorola	MC54HC04	
	National	MM54HC04	
	RCA	**CD54HC04**	**842**
PCF54HC08	Motorola	MC54HC08	
	National	MM54HC08	
	RCA	**CD54HC08**	**842**
PCF54HC10	Motorola	MC54HC10	
	National	MM54HC10	
	RCA	**CD54HC10**	**842**
PCF54HC107	Motorola	MC54HC107	
	National	MM54HC107	
	RCA	**CD54HC107**	**842**
PCF54HC109	Motorola	MC54HC109	
	National	MM54HC109	
	RCA	**CD54HC109**	**842**
PCF54HC11	Motorola	MC54HC11	
	National	MM54HC11	
	RCA	**CD54HC11**	**842**
PCF54HC112	Motorola	MC54HC112	
	National	MM54HC112	
	RCA	**CD54HC112**	**842**
PCF54HC123	Motorola	MC54HC123	
	National	MM54HC123	
	RCA	**CD54HC123**	**842**
PCF54HC132	Motorola	MC54HC132	
	National	MM54HC132	
	RCA	**CD54HC132**	**842**
PCF54HC133	Motorola	MC54HC133	
	National	MM54HC133	
	RCA	CD54HC133	
PCF54HC138	Motorola	MC54HC138	
	National	MM54HC138	
	RCA	**CD54HC138**	**842**
PCF54HC139	Motorola	MC54HC139	
	National	MM54HC139	
	RCA	**CD54HC139**	**842**
PCF54HC14	Motorola	MC54HC14	
	National	MM54HC14	
	RCA	**CD54HC14**	**842**
PCF54HC147	Motorola	MC54HC147	
	National	MM54HC147	
	RCA	**CD54HC147**	**842**
PCF54HC151	Motorola	MC54HC151	
	National	MM54HC151	
	RCA	**CD54HC151**	**842**
PCF54HC153	Motorola	MC54HC153	
	National	MM54HC153	
	RCA	**CD54HC153**	**842**
PCF54HC154	Motorola	MC54HC154	
	National	MM54HC154	
	RCA	**CD54HC154**	**842**
PCF54HC157	Motorola	MC54HC157	
	RCA	**CD54HC157**	**842**
PCF54HC158	Motorola	MC54HC158	
	National	MM54HC158	
	RCA	**CD54HC158**	**842**
PCF54HC160	Motorola	MC54HC160	
	National	MM54HC160	
	RCA	**CD54HC160**	**842**
PCF54HC161	Motorola	MC54HC161	
	National	MM54HC161	
	RCA	**CD54HC161**	**842**
PCF54HC162	Motorola	MC54HC162	
	National	MM54HC162	
	RCA	**CD54HC162**	**842**
PCF54HC163	Motorola	MC54HC163	
	National	MM54HC163	
	RCA	**CD54HC163**	**842**
PCF54HC164	Motorola	MC54HC164	
	National	MM54HC164	
	RCA	**CD54HC164**	**842**
PCF54HC165	Motorola	MC54HC165	
	National	MM54HC165	
	RCA	**CD54HC165**	**842**
PCF54HC166	**RCA**	**CD54HC166**	**842**
PCF54HC173	Motorola	MC54HC173	
	National	MM54HC173	
	RCA	**CD54HC173**	**842**
PCF54HC174	Motorola	MC54HC174	
	National	MM54HC174	
	RCA	**CD54HC174**	**842**
PCF54HC175	Motorola	MC54HC175	
	National	MM54HC175	
	RCA	**CD54HC175**	**842**
PCF54HC191	**RCA**	**CD54HC191**	**842**
~~PCF54HC192~~	~~Motorola~~	~~MC54HC192~~	
	National	MM54HC192	
	RCA	**CD54HC192**	**842**
PCF54HC193	Motorola	MC54HC193	
	National	MM54HC193	
	RCA	**CD54HC193**	**842**
PCF54HC194	Motorola	MC54HC194	
	National	MM54HC194	
	RCA	**CD54HC194**	**842**
PCF54HC195	Motorola	MC54HC195	
	National	MM54HC195	
	RCA	**CD54HC195**	**842**
PCF54HC20	Motorola	MC54HC20	
	National	MM54HC20	
	RCA	**CD54HC20**	**842**
PCF54HC221	Motorola	MC54HC221	
	National	MM54HC221	
	RCA	**CD54HC221**	**842**
PCF54HC238	**RCA**	**CD54HC238**	**842**
PCF54HC240	Motorola	MC54HC240	
	National	MM54HC240	
	RCA	**CD54HC240**	**842**
PCF54HC241	Motorola	MC54HC241	
	National	MM54HC241	
	RCA	**CD54HC241**	**842**
PCF54HC242	Motorola	MC54HC242	
	National	MM54HC242	
	RCA	**CD54HC242**	**842**
PCF54HC243	Motorola	MC54HC243	
	National	MM54HC243	
	RCA	**CD54HC243**	**842**
PCF54HC244	Motorola	MC54HC244	
	National	MM54HC244	
	RCA	**CD54HC244**	**842**
PCF54HC245	Motorola	MC54HC245	
	National	MM54HC245	
	RCA	**CD54HC245**	**842**
PCF54HC251	Motorola	MC54HC251	
	National	MM54HC251	
	RCA	**CD54HC251**	**842**
PCF54HC253	Motorola	MC54HC253	
	National	MM54HC253	
	RCA	**CD54HC253**	**842**
PCF54HC257	Motorola	MC54HC257	
	National	MM54HC257	
	RCA	**CD54HC257**	**842**
PCF54HC259	Motorola	MC54HC259	
	National	MM54HC259	
	RCA	**CD54HC259**	**842**
PCF54HC266	Motorola	MC54HC266	
	National	MM54HC266	
	RCA	CD54HC266	
PCF54HC27	Motorola	MC54HC27	
	National	MM54HC27	
	RCA	**CD54HC27**	**842**
PCF54HC273	Motorola	MC54HC273	
	RCA	**CD54HC273**	**842**
PCF54HC280	Motorola	MC54HC280	
	National	MM54HC280	
	RCA	**CD54HC280**	**842**
PCF54HC297	**RCA**	**CD54HC297**	**842**
PCF54HC299	Motorola	MC54HC299	
	National	MM54HC299	
	RCA	**CD54HC299**	**842**
PCF54HC30	Motorola	MC54HC30	
	National	MM54HC30	
	RCA	CD54HC30	
PCF54HC32	Motorola	MC54HC32	
	National	MM54HC32	
	RCA	**CD54HC32**	**842**
PCF54HC354	Motorola	MC54HC354	
	National	MM54HC354	
	RCA	**CD54HC354**	**842**
PCF54HC356	Motorola	MC54HC356	
	National	MM54HC356	
	RCA	**CD54HC356**	**842**
PCF54HC365	Motorola	MC54HC365	
	National	MM54HC365	
	RCA	**CD54HC365**	**842**
PCF54HC366	Motorola	MC54HC366	
	National	MM54HC366	
	RCA	**CD54HC366**	**842**
PCF54HC367	Motorola	MC54HC367	
	National	MM54HC367	
	RCA	**CD54HC367**	**842**
PCF54HC368	Motorola	MC54HC368	
	National	MM54HC368	
	RCA	**CD54HC368**	**842**
PCF54HC373	Motorola	MC54HC373	
	National	MM54HC373	
	RCA	**CD54HC373**	**842**
PCF54HC374	Motorola	MC54HC374	
	National	MM54HC374	
	RCA	**CD54HC374**	**842**
PCF54HC377	**RCA**	**CD54HC377**	**842**
PCF54HC384	**RCA**	**CD54HC384**	**843**
PCF54HC390	Motorola	MC54HC390	
	National	MM54HC390	
	RCA	**CD54HC390**	**843**
PCF54HC393	Motorola	MC54HC393	
	National	MM54GC393	
	RCA	CD54HG393	
PCF54HC4002	Motorola	MC54HC4002	
	National	MM54HC4002	
	RCA	**CD54HC4002**	**843**
PCF54HC40104	**RCA**	**CD54HC40104**	**843**
PCF54HC40105	**RCA**	**CD54HC40105**	**843**
PCF54HC4017	Motorola	MC54HC4017	
	National	MM54HC4017	
	RCA	**CD54HC4017**	**843**
PCF54HC4020	Motorola	MC54HC4020	
	National	MM54HC4020	
	RCA	**CD54HC4020**	**843**
PCF54HC4024	Motorola	MC54HC4024	
	RCA	**CD54HC4024**	**843**
PCF54HC4040	Motorola	MC54HC4040	
	National	MM54HC4040	
	RCA	**CD54HC4040**	**843**
PCF54HC4049	Motorola	MC54HC4049	
	National	MM54HC4049	
	RCA	**CD54HC4049**	**843**
PCF54HC4050	Motorola	MC54HC4050	
	National	MM54HC4050	
	RCA	**CD54HC4050**	**843**
PCF54HC4051	Motorola	MC54HC4051	
	RCA	**CD54HC4051**	**843**
PCF54HC4052	Motorola	MC54HC4052	
	RCA	**CD54HC4052**	**843**
PCF54HC4053	Motorola	MC54HC4053	
	RCA	**CD54HC4053**	**843**
PCF54HC4060	Motorola	MC54HC4060	
	National	MM54HC4060	
	RCA	**CD54HC4060**	**843**
PCF54HC42	Motorola	MC54HC42	
	National	MM54HC42	
	RCA	**CD54HC42**	**842**
PCF54HC4511	Motorola	MC54HC4511	
	National	MM54HC4511	
	RCA	**CD54HC4511**	**843**
PCF54HC4514	Motorola	MC54HC4514	
	National	MM54HC4514	
	RCA	**CD54HC4514**	**843**
PCF54HC4520	**RCA**	**CD54HC4520**	**843**
PCF54HC4538	Motorola	MC54HC4538	
	National	MM54HC4538	
	RCA	**CD54HC4538**	**843**
PCF54HC533	Motorola	MC54HC533	
	National	MM54HC533	
	RCA	**CD54HC533**	**843**
PCF54HC534	Motorola	MC54HC534	
	National	MM54HC534	
	RCA	**CD54HC534**	**843**
PCF54HC540	RCA	CD55HC540	
PCF54HC541	**RCA**	**CD54HC541**	**843**
PCF54HC563	National	MM54HC563	
	RCA	**CD54HC563**	**843**
PCF54HC564	National	MM54HC564	
	RCA	**CD54HC564**	**843**
PCF54HC573	Motorola	MC54HC573	
	National	MM54HC573	
	RCA	**CD54HC573**	**843**
PCF54HC574	Motorola	MC54HC574	
	National	MM54HC574	
	RCA	**CD54HC574**	**843**
PCF54HC640	Motorola	MC54HC640	
	National	MM54HC640	
	RCA	**CD54HC640**	**843**
PCF54HC643	Motorola	MC54HC643	
	National	MM54HC643	
	RCA	**CD54HC643**	**843**
PCF54HC645	Motorola	MC54HC645	
	National	MM54HC645	
	RCA	CD54HC645	
PCF54HC646	Motorola	MC54HC646	
	National	MM54HC646	
	RCA	**CD54HC646**	**843**
PCF54HC648	Motorola	MC54HC648	
	National	MM54HC648	
	RCA	**CD54HC648**	**843**
PCF54HC670	**RCA**	**CD54HC670**	**843**
PCF54HC688	Motorola	MC54HC688	
	National	MM54HC688	
	RCA	**CD54HC688**	**843**
PCF54HC73	Motorola	MC54HC73	
	National	MM54HC73	
	RCA	**CD54HC73**	**842**

◆ Discontinued

The manufacturers report their devices can be used as direct replacements.
Performance details often differ, so compare the specifications considering your requirements.

Signetics (Cont'd)

Manufacturer Device	Replacement Source	Device	IC Master Page
PCF54HC74	Motorola	MC54HC74	
	National	MM54HC74	
	RCA	**CD54HC74**	**842**
PCF54HC75	Motorola	MC54HC75	
	National	MM54HC75	
	RCA	**CD54HC75**	**842**
PCF54HC76	Motorola	MC54HC76	
	National	MM54HC76	
	RCA	CD54HC76	
PCF54HC85	Motorola	MC54HC85	
	National	MM54HC85	
	RCA	**CD54HC85**	**842**
PCF54HC86	Motorola	MC54HC86	
	National	MM54HC86	
	RCA	**CD54HC86**	**842**
PCF54HCT00	RCA	CD54HCT00	
PCF54HCT02	RCA	CD54HCT02	
PCF54HCT04	RCA	CD54HCT04	
PCF54HCT08	RCA	CD54HCT08	
PCF54HCT10	RCA	CD54HCT10	
PCF54HCT107	RCA	CD54HCT107	
PCF54HCT109	RCA	CD54HCT109	
PCF54HCT11	RCA	CD54HCT11	
PCF54HCT112	RCA	CD54HCT112	
PCF54HCT123	RCA	CD54HCT123	
PCF54HCT132	RCA	CD54HCT132	
PCF54HCT133	RCA	CD54HCT133	
~~PCF54HCT138~~	~~Motorola~~	~~MC54HCT138~~	
	RCA	CD54HCT138	
PCF54HCT139	RCA	CD54HCT139	
PCF54HCT14	RCA	CD54HCT14	
PCF54HCT147	RCA	CD54HCT147	
PCF54HCT151	RCA	CD54HCT151	
PCF54HCT153	RCA	CD54HCT153	
PCF54HCT154	RCA	CD54HCT154	
PCF54HCT157	RCA	CD54HCT157	
PCF54HCT158	RCA	CD54HCT158	
PCF54HCT160	RCA	CD54HCT160	
PCF54HCT161	RCA	CD54HCT161	
PCF54HCT162	RCA	CD54HCT162	
PCF54HCT163	RCA	CD54HCT163	
PCF54HCT164	RCA	CD54HCT164	
PCF54HCT165	RCA	CD54HCT165	
PCF54HCT166	RCA	CD54HCT166	
PCF54HCT173	RCA	CD54HCT173	
PCF54HCT174	RCA	CD54HCT174	
PCF54HCT175	RCA	CD54HCT175	
PCF54HCT191	RCA	CD54HCT191	
PCF54HCT192	RCA	CD54HCT192	
PCF54HCT193	RCA	CD54HCT193	
PCF54HCT194	RCA	CD54HCT194	
PCF54HCT195	RCA	CD54HCT195	
PCF54HCT20	RCA	CD54HCT20	
PCF54HCT221	RCA	CD54HCT221	
PCF54HCT238	RCA	CD54HCT238	
PCF54HCT240	RCA	CD54HCT240	
PCF54HCT241	Motorola	MC54HCT241	
	RCA	CD54HCT241	
PCF54HCT242	RCA	CD54HCT242	
PCF54HCT243	RCA	CD54HCT243	
PCF54HCT244	Motorola	MC54HCT244	
	RCA	CD54HCT244	
PCF54HCT245	Motorola	MC54HCT245	
	RCA	CD54HCT245	
PCF54HCT251	RCA	CD54HCT251	
PCF54HCT253	RCA	CD54HCT253	
PCF54HCT257	RCA	CD54HCT257	
PCF54HCT259	RCA	CD54HCT259	
PCF54HCT266	RCA	CD54HCT266	
PCF54HCT27	RCA	CD54HCT27	
PCF54HCT273	RCA	CD54HCT273	
PCF54HCT280	RCA	CD54HCT280	
PCF54HCT297	RCA	CD54HCT297	
PCF54HCT299	RCA	CD54HCT299	
PCF54HCT30	RCA	CD54HCT30	
PCF54HCT32	RCA	CD54HCT32	
PCF54HCT354	RCA	CD54HCT354	
PCF54HCT356	RCA	CD54HCT356	
PCF54HCT365	RCA	CD54HCT365	
PCF54HCT366	RCA	CD54HCT366	
PCF54HCT367	RCA	CD54HCT367	
PCF54HCT368	RCA	CD54HCT368	
PCF54HCT373	Motorola	MC54HCT373	
	RCA	CD54HCT373	
PCF54HCT374	RCA	CD54HCT374	
PCF54HCT377	RCA	CD54HCT377	
PCF54HCT384	RCA	CD54HCT384	
PCF54HCT390	RCA	CD54HCT390	
PCF54HCT393	RCA	CD54HCT393	
PCF54HCT4002	RCA	CD54HCT4002	
PCF54HCT40104			
	RCA	CD54HCT40104	
PCF54HCT40105			
	RCA	CD54HCT40105	
PCF54HCT4017	RCA	CD54HCT4017	
PCF54HCT4020	RCA	CD54HCT4020	
PCF54HCT4024	RCA	CD54HCT4024	
PCF54HCT4040	RCA	CD54HCT4040	
PCF54HCT4049	RCA	CD54HCT4049	
PCF54HCT4050	RCA	CD54HCT4050	
PCF54HCT4051	RCA	CD54HCT4051	
PCF54HCT4052	RCA	CD54HCT4052	
PCF54HCT4053	RCA	CD54HCT4053	
PCF54HCT4060	RCA	CD54HCT4060	
PCF54HCT42	RCA	CD54HCT42	
PCF54HCT4511	RCA	CD54HCT4511	
PCF54HCT4514	RCA	CD54HCT4514	
PCF54HCT4520	RCA	CD54HCT4520	
PCF54HCT4538	RCA	CD54HCT4538	
PCF54HCT533	Motorola	MC54HCT533	
	RCA	CD54HCT533	
PCF54HCT534	RCA	CD54HCT534	
PCF54HCT540	RCA	CD54HCT540	
PCF54HCT541	RCA	CD54HCT541	
PCF54HCT563	RCA	CD54HCT563	
PCF54HCT564	RCA	CD54HCT564	
	Zytrex	ZX74HCT564-2	
PCF54HCT573	RCA	CD54HCT573	
PCF54HCT574	RCA	CD54HCT574	
PCF54HCT640	Motorola	MC54HCT640	
	RCA	CD54HCT640	
PCF54HCT643	Motorola	MC54HCT643	
	RCA	CD54HCT643	
PCF54HCT645	RCA	CD54HCT645	
PCF54HCT646	RCA	CD54HCT646	
PCF54HCT648	RCA	CD54HCT648	
PCF54HCT670	RCA	CD54HCT670	
PCF54HCT688	RCA	CD54HCT688	
PCF54HCT73	RCA	CD54HCT73	
PCF54HCT74	RCA	CD54HCT74	
PCF54HCT75	RCA	CD54HCT75	
PCF54HCT76	RCA	CD54HCT76	
PCF54HCT85	RCA	CD54HCT85	
PCF54HCT86	RCA	CD54HCT86	
PCF54HCU04	Motorola	MC54HCU04	
	RCA	CD54HCU04	
PCF74HC00	Motorola	MC74HC00	
	National	MM74HC00	
	RCA	CD74HC00	
	SPI	**SP74HC00**	**848**
	Toshiba	TC40H000	
PCF74HC02	Motorola	MC74HC02	
	National	MM74HC02	
	RCA	CD74HC02	
	SPI	**SP74HC02**	**848**
	Toshiba	TC40H002	
PCF74HC08	Motorola	MC74HC08	
	National	MM74HC08	
	RCA	CD74HC08	
	SPI	**SP74HC08**	**848**
PCF74HC10	Motorola	MC74HC10	
	National	MM74HC10	
	RCA	CD74HC10	
	SPI	**SP74HC10**	**848**
	SiliconG	SG75474	
	Toshiba	TC40H010	
PCF74HC107	Motorola	MC74HC107	
	National	MM74HC107	
	RCA	CD74HC107	
	SPI	**SP74HC107**	**848**
	Toshiba	TC40H107	
PCF74HC109	Motorola	MC74HC109	
	National	MM74HC109	
	RCA	CD74HC109	
	SPI	**SP74HC109**	**848**
PCF74HC11	Motorola	MC74HC11	
	National	MM74HC11	
	RCA	CD74HC11	
	SPI	**SP74HC11**	**848**
	Toshiba	TC40H011	
PCF74HC112	Motorola	MC74HC112	
	National	MM74HC112	
	RCA	CD74HC112	
	SPI	SP74HC112N	
~~PCF74HC123~~	~~Motorola~~	~~MC74HC123~~	
	National	MM74HC123	
	RCA	CD74HC123	
PCF74HC132	Motorola	MC74HC132	
	National	MM74HC132	
	RCA	CD74HC132	
	SPI	**SP74HC132**	**848**
PCF74HC133	Motorola	MC74HC133	
	National	MM74HC133	
	RCA	CD74HC133	
	SPI	**SP74HC133**	**848**
PCF74HC138	Motorola	MC74HC138	
	National	MM74HC138	
	RCA	CD74HC138	
	SPI	**SP74HC138**	**848**
PCF74HC139	Motorola	MC74HC139	
	National	MM74HC139	
	RCA	CD74HC139	
	SPI	**SP74HC139**	**848**
	Toshiba	TC40H139	
PCF74HC14	Motorola	MC74HC14	
	National	MM74HC14	
	RCA	CD74HC14	
	SPI	**SP74HC14**	**848**
PCF74HC147	Motorola	MC74HC147	
	National	MM74HC147	
	RCA	CD74HC147	
	SPI	**SP74HC147**	**848**
PCF74HC151	Motorola	MC74HC151	
	National	MM74HC151	
	RCA	CD74HC151	
	SPI	**SP74HC151**	**848**
PCF74HC153	Motorola	MC74HC153	
	National	MM74HC153	
	RCA	CD74HC153	
	SPI	**SP74HC153**	**848**
	Toshiba	TC40H153	
PCF74HC154	Motorola	MC74HC154	
	National	MM74HC154	
	RCA	CD74HC154	
PCF74HC157	Motorola	MC74HC157	
	National	MM74HC157	
	RCA	CD74HC157	
	SPI	**SP74HC157**	**848**
	Toshiba	TC40H157	
PCF74HC158	Motorola	MC74HC158	
	National	MM74HC158	
	RCA	CD74HC158	
	SPI	**SP74HC158**	**848**
	Toshiba	TC40H158	
PCF74HC160	Motorola	MC74HC160	
	National	MM74HC160	
	RCA	CD74HC160	
	SPI	**SP74HC160**	**848**
PCF74HC161	Motorola	MC74HC161	
	National	MM74HC161	
	RCA	CD74HC161	
	SPI	**SP74HC161**	**848**
PCF74HC162	Motorola	MC74HC162	
	National	MM74HC162	
	RCA	CD74HC162	
	SPI	**SP74HC162**	**848**
PCF74HC163	Motorola	MC74HC163	
	National	MM74HC163	
	RCA	CD74HC163	
	SPI	**SP74HC163**	**848**
PCF74HC164	Motorola	MC74HC164	
	National	MM74HC164	
	RCA	CD74HC164	
	SPI	SP74HC164	
PCF74HC165	Motorola	MC74HC165	
	National	MM74HC165	
	RCA	CD74HC165	
	SPI	SP74HC165	
PCF74HC166	RCA	CD74HC166	
PCF74HC173	Motorola	MC74HC173	
	National	MM74HC173	
	RCA	CD74HC173	
	SPI	**SP74HC173**	**848**
PCF74HC174	Motorola	MC74HC174	
	National	MM74HC174	
	RCA	CD74HC174	
	SPI	**SP74HC174**	**848**
	Toshiba	TC40H174	
PCF74HC175	Motorola	MC74HC175	
	National	MM74HC175	
	RCA	CD74HC175	
	SPI	**SP74HC175**	**848**
	Toshiba	TC40H175	
PCF74HC191	RCA	CD74HC191	
~~PCF74HC192~~	~~Motorola~~	~~MC74HC192~~	
	National	MM74HC192	
	RCA	CD74HC192	
	SPI	**SP74HC192**	**848**
	Toshiba	TC40H192	
PCF74HC193	Motorola	MC74HC193	
	National	MM74HC193	
	RCA	CD74HC193	
		(Continued)	
PCF74HC193	**SPI**	**SP74HC193**	**848**
	Toshiba	TC40H193	
PCF74HC194	Motorola	MC74HC194	
	National	MM74HC194	
	RCA	CD74HC194	
	SPI	SP74HC194	
PCF74HC195	Motorola	MC74HC195	
	National	MM74HC195	
	RCA	CD74HC195	
	SPI	SP74HC195	
PCF74HC20	Motorola	MC74HC20	
	National	MM74HC20	
	RCA	CD74HC20	
	SPI	**SP74HC20**	**848**
	Toshiba	TC40H020	
PCF74HC221	Motorola	MC74HC221	
	National	MM74HC221	
	RCA	CD74HC221	
PCF74HC238	RCA	CD74HC238	
	SPI	SP74HC238	
PCF74HC240	Motorola	MC74HC240	
	National	MM74HC240	
	RCA	CD74HC240	
	SPI	**SP74HC240**	**848**
	Toshiba	TC40H240	
PCF74HC241	Motorola	MC74HC241	
	National	MM74HC241	
	RCA	CD74HC241	
	~~SPI~~	~~SP74HC241~~	~~848~~
PCF74HC242	Motorola	MC74HC242	
	National	MM74HC242	
	RCA	CD74HC242	
		SGN	
	SPI	SP74HC242	
PCF74HC243	Motorola	MC74HC243	
	National	MM74HC243	
	RCA	CD74HC243	
PCF74HC244	Motorola	MC74HC244	
	National	MM74HC244	
	RCA	CD74HC244	
PCF74HC245	Motorola	MC74HC245	
	National	MM74HC245	
	RCA	CD74HC245	
PCF74HC251	Motorola	MC74HC251	
	National	MM74HC251	
	RCA	CD74HC251	
	SPI	**SP74HC251**	**848**
PCF74HC253	Motorola	MC74HC253	
	National	MM74HC253	
	RCA	CD74HC253	
	SPI	**SP74HC253**	**848**
PCF74HC257	Motorola	MC74HC257	
	National	MM74HC257	
	RCA	CD74HC257	
	SPI	**SP74HC257**	**848**
PCF74HC259	Motorola	MC74HC259	
	National	MM74HC259	
	RCA	CD74HC259	
PCF74HC266	Motorola	MC74HC266	
	National	MM74HC266	
	RCA	CD74HC266	
	SPI	**SP74HC266**	**848**
PCF74HC27	Motorola	MC74HC27	
	National	MM74HC27	
	RCA	CD74HC27	
	SPI	**SP74HC27**	**848**
	Toshiba	TC40H027	
PCF74HC273	Motorola	MC74HC273	
	RCA	CD74HC273	
	SPI	**SP74HC273**	**848**
PCF74HC280	Motorola	MC74HC280	
	National	MM74HC280	
	RCA	CD74HC280	
	SPI	**SP74HC280**	**848**
PCF74HC297	RCA	CD74HC297	
PCF74HC299	Motorola	MC74HC299	
	National	MM74HC299	
	RCA	CD74HC299	
PCF74HC30	Motorola	MC74HC30	
	National	MM74HC30	
	RCA	CD74HC30	
	~~SPI~~	~~SP74HC30~~	~~848~~
PCF74HC32	Motorola	MC74HC32	
	National	MM74HC32	
	RCA	CD74HC32	
	SPI	**SP74HC32**	**848**
	Toshiba	TC40H032	
~~PCF74HC354~~	~~Motorola~~	~~MC74HC354~~	
	National	MM74HC354	
	RCA	CD74HC354	

~~Discontinued~~

Bold face device numbers indicate manufacturers data is provided in the IC Master on the pages noted.

© IC MASTER 1984

Signetics (Cont'd)

Manufacturer Device	Replacement Source	Device	IC Master Page
PCF74HC356	Motorola	MC74HC356	
	National	MM74HC356	
	RCA	CD74HC356	
PCF74HC366	Motorola	MC74HC366	
	National	MM74HC366	
	RCA	CD74HC366	
PCF74HC367	Motorola	MC74HC367	
	National	MM74HC367	
	RCA	CD74HC367	
	SPI	SP74HC367	
PCF74HC368	Motorola	MC74HC368	
	National	MM74HC368	
	RCA	CD74HC368	
PCF74HC373	Motorola	MC74HC373	
	National	MM74HC373	
	RCA	CD74HC373	
	SPI	SP74HC373	848
PCF74HC374	Motorola	MC74HC374	
	National	MM74HC374	
	RCA	CD74HC374	
	SPI	SP74HC374	848
PCF74HC377	RCA	CD74HC377	
PCF74HC384	RCA	CD74HC384	843
PCF74HC390	Motorola	MC74HC390	
	National	MM74HC390	
	RCA	CD74HC390	843
PCF74HC393	Motorola	MC74HC393	
	National	MM74HC393	
	RCA	CD74HC393	843
	SPI	SP74HC393	848
PCF74HC4002	Motorola	MC74HC4002	
	National	MM74HC4002	
	RCA	CD74HC4002	843
	SPI	SP74HC4002	
PCF74HC40104	RCA	CD74HC40104	843
PCF74HC40105	RCA	CD74HC40105	843
PCF74HC4017	Motorola	MC74HC4017	
	National	MM74HC4017	
	RCA	CD74HC4017	843
	SPI	SP74HC4017	848
PCF74HC4020	Motorola	MC74HC4020	
	National	MM74HC4020	
	RCA	CD74HC4020	843
	SPI	SP74HC4020	848
PCF74HC4024	Motorola	MC74HC4024	
	RCA	CD74HC4024	843
PCF74HC4040	Motorola	MC74HC4040	
	National	MM74HC4040	
	RCA	CD74HC4040	843
PCF74HC4049	Motorola	MC74HC4049	
	National	MM74HC4049	
	RCA	CD74HC4049	843
PCF74HC4050	Motorola	MC74HC4050	
	National	MM74HC4050	
	RCA	CD74HC4050	843
PCF74HC4051	Motorola	MC74HC4051	
	RCA	CD74HC4051	843
PCF74HC4052	Motorola	MC74HC4052	
	RCA	CD74HC4052	843
PCF74HC4053	Motorola	MC74HC4053	
	RCA	CD74HC4053	843
PCF74HC4060	Motorola	MC74HC4060	
	National	MM74HC4060	
	RCA	CD74HC4060	843
PCF74HC42	Motorola	MC74HC42	
	National	MM74HC42	
	RCA	CD74HC42	
	SPI	SP74HC42	848
PCF74HC4511	Motorola	MC74HC4511	
	National	MM74HC4511	
	RCA	CD74HC4511	843
PCF74HC4514	Motorola	MC74HC4514	
	National	MM74HC4514	
	RCA	CD74HC4514	843
PCF74HC4520	Motorola	MC74HC4520	
	RCA	CD74HC4520	843
PCF74HC4538	Motorola	MC74HC4538	
	National	MM74HC4538	
	RCA	CD74HC4538	843
PCF74HC533	Motorola	MC74HC533	
	National	MM74HC533	
	RCA	CD74HC533	843
	SPI	SP74HC533	848
PCF74HC534	Motorola	MC74HC534	
	National	MM74HC534	
	RCA	CD74HC534	843
	SPI	SP74HC534	
PCF74HC540	Motorola	MC74HC540	
	RCA	CD74HC540	843
PCF74HC541	Motorola	MC74HC541	
	RCA	CD74HC541	843
PCF74HC563	Motorola	MC74HC563	
	National	MM74HC563	
	RCA	CD74HC563	843
PCF74HC564	Motorola	MC74HC564	
	National	MM74HC564	
	RCA	CD74HC564	843
PCF74HC573	Motorola	MC74HC573	
	National	MM74HC573	
	RCA	CD74HC573	843
	SPI	SP74HC573	848
PCF74HC574	Motorola	MC74HC574	
	National	MM74HC574	
	RCA	CD74HC574	843
	SPI	SP74HC574	848
PCF74HC640	Motorola	MC74HC640	
	National	MM74HC640	
	RCA	CD74HC640	843
PCF74HC643	Motorola	MC74HC643	
	National	MM74HC643	
	RCA	CD74HC643	843
PCF74HC645	Motorola	MC74HC645	
	National	MM74HC645	
	RCA	CD74HC645	
PCF74HC646	Motorola	MC74HC646	
	National	MM74HC646	
	RCA	CD74HC646	843
PCF74HC648	Motorola	MC74HC648	
	National	MM74HC648	
	RCA	CD74HC648	843
PCF74HC670	RCA	CD74HC670	843
PCF74HC688	Motorola	MC74HC688	
	National	MM74HC688	
	RCA	CD74HC688	843
PCF74HC73	Motorola	MC74HC73	
	National	MM74HC73	
	RCA	CD74HC73	
	SPI	SP74HC73	848
PCF74HC74	Motorola	MC74HC74	
	National	MM74HC74	
	RCA	CD74HC74	
	SPI	SP74HC74	848
	Toshiba	TC40H074	
PCF74HC75	Motorola	MC74HC75	
	National	MM74HC75	
	RCA	CD74HC75	
	SPI	SP74HC75	848
PCF74HC76	Motorola	MC74HC76	
	National	MM74HC76	
	RCA	CD74HC76	
	SPI	SP74HC76	848
	Toshiba	TC40H076	
PCF74HC85	Motorola	MC74HC85	
	National	MM74HC85	
	RCA	CD74HC85	
	SPI	SP74HC85	
PCF74HC86	Motorola	MC74HC86	
	National	MM74HC86	
	RCA	CD74HC86	
	SPI	SP74HC86N	
PCF74HCT00	RCA	CD74HCT00	842
PCF74HCT02	RCA	CD74HCT02	842
PCF74HCT08	RCA	CD74HCT08	842
PCF74HCT10	RCA	CD74HCT10	842
PCF74HCT107	RCA	CD74HCT107	842
PCF74HCT109	RCA	CD74HCT109	842
PCF74HCT11	RCA	CD74HCT11	842
PCF74HCT112	RCA	CD74HCT112	842
PCF74HCT123	RCA	CD74HCT123	842
PCF74HCT132	RCA	CD74HCT132	842
PCF74HCT133	RCA	CD74HCT133	
PCF74HCT138	RCA	CD74HCT138	842
PCF74HCT139	RCA	CD74HCT139	842
	SPI	SP74HCT139	844
	Zytrex	ZX74HCT139-2	
PCF74HCT14	RCA	CD74HCT14	842
PCF74HCT147	RCA	CD74HCT147	842
PCF74HCT151	RCA	CD74HCT151	842
PCF74HCT153	RCA	CD74HCT153	842
PCF74HCT154	RCA	CD74HCT154	842
PCF74HCT157	RCA	CD74HCT157	842
PCF74HCT158	RCA	CD74HCT158	842
PCF74HCT160	RCA	CD74HCT160	842
	Zytrex	ZX74HCT160-2	
PCF74HCT161	RCA	CD74HCT161	842
	Zytrex	ZX74HCT161-2	
PCF74HCT162	RCA	CD74HCT162	842
	Zytrex	ZX74HCT162-2	
PCF74HCT163	RCA	CD74HCT163	842
	Zytrex	ZX74HCT163-2	
PCF74HCT164	RCA	CD74HCT164	842
PCF74HCT165	RCA	CD74HCT165	842
PCF74HCT166	RCA	CD74HCT166	842
PCF74HCT173	RCA	CD74HCT173	842
PCF74HCT174	RCA	CD74HCT174	842
PCF74HCT175	RCA	CD74HCT175	842
PCF74HCT191	RCA	CD74HCT191	842
PCF74HCT192	RCA	CD74HCT192	842
PCF74HCT193	RCA	CD74HCT193	842
PCF74HCT194	RCA	CD74HCT194	842
PCF74HCT195	RCA	CD74HCT195	842
PCF74HCT20	RCA	CD74HCT20	842
PCF74HCT221	RCA	CD74HCT221	842
PCF74HCT238	RCA	CD74HCT238	842
PCF74HCT240	Motorola	MC74HCT240	
	RCA	CD74HCT240	842
	SPI	SP74HCT240	844
	Zytrex	ZX74HCT240-2	
PCF74HCT241	Motorola	MC74HCT241	
	RCA	CD74HCT241	842
	SPI	SP74HCT241	844
	Zytrex	ZX74HCT241-2	
PCF74HCT242	RCA	CD74HCT242	842
PCF74HCT243	RCA	CD74HCT243	842
PCF74HCT244	Motorola	MC74HCT244	
	RCA	CD74HCT244	842
	SPI	SP74HCT244	844
	Zytrex	ZX74HCT244-2	
PCF74HCT251	RCA	CD74HCT251	842
PCF74HCT253	RCA	CD74HCT253	842
PCF74HCT257	RCA	CD74HCT257	842
PCF74HCT259	RCA	CD74HCT259	842
PCF74HCT266	RCA	CD74HCT266	
PCF74HCT27	RCA	CD74HCT27	842
PCF74HCT273	RCA	CD74HCT273	842
PCF74HCT280	RCA	CD74HCT280	842
PCF74HCT297	RCA	CD74HCT297	842
PCF74HCT299	RCA	CD74HCT299	842
PCF74HCT30	RCA	CD74HCT30	
PCF74HCT32	RCA	CD74HCT32	842
PCF74HCT354	RCA	CD74HCT354	842
PCF74HCT356	RCA	CD74HCT356	842
PCF74HCT365	RCA	CD74HCT365	842
PCF74HCT366	RCA	CD74HCT366	842
PCF74HCT367	RCA	CD74HCT367	842
PCF74HCT368	RCA	CD74HCT368	842
PCF74HCT373	RCA	CD74HCT373	842
PCF74HCT374	RCA	CD74HCT374	842
PCF74HCT377	RCA	CD74HCT377	842
PCF74HCT384	RCA	CD74HCT384	
PCF74HCT390	RCA	CD74HCT390	
PCF74HCT393	RCA	CD74HCT393	
PCF74HCT4002	RCA	CD74HCT4002	
PCF74HCT40104	RCA	CD74HCT40104	
PCF74HCT40105	RCA	CD74HCT40105	
PCF74HCT4017	RCA	CD74HCT4017	
PCF74HCT4020	RCA	CD74HCT4020	
PCF74HCT4024	RCA	CD74HCT4024	
PCF74HCT4040	RCA	CD74HCT4040	
PCF74HCT4049	RCA	CD74HCT4049	
PCF74HCT4050	RCA	CD74HCT4050	
PCF74HCT4051	RCA	CD74HCT4051	
PCF74HCT4052	RCA	CD74HCT4052	
PCF74HCT4053	RCA	CD74HCT4053	
PCF74HCT4060	RCA	CD74HCT4060	
PCF74HCT42	RCA	CD74HCT42	842
PCF74HCT4511	RCA	CD74HCT4511	
PCF74HCT4514	RCA	CD74HCT4514	
PCF74HCT4538	RCA	CD74HCT4538	
PCF74HCT533	RCA	CD74HCT533	
PCF74HCT534	Motorola	MC74HCT534	
	RCA	CD74HCT534	
	Zytrex	ZX74HCT534-2	
PCF74HCT540	RCA	CD74HCT540	
PCF74HCT541	RCA	CD74HCT541	
PCF74HCT563	RCA	CD74HCT563	
PCF74HCT564	RCA	CD74HCT564	
PCF74HCT573	RCA	CD74HCT573	
PCF74HCT574	RCA	CD74HCT574	
PCF74HCT640	Motorola	MC74HCT640	
	RCA	CD74HCT640	
	Zytrex	ZX74HCT640-2	
PCF74HCT643	Motorola	MC74HCT643	
	RCA	CD74HCT643	
	Zytrex	ZX74HCT643-2	
PCF74HCT645	RCA	CD74HCT645	
PCF74HCT646	RCA	CD74HCT646	
PCF74HCT648	RCA	CD74HCT648	
PCF74HCT670	RCA	CD74HCT670	
PCF74HCT688	RCA	CD74HCT688	
PCF74HCT73	RCA	CD74HCT73	842
PCF74HCT74	RCA	CD74HCT74	842
PCF74HCT75	RCA	CD74HCT75	842
PCF74HCT76	RCA	CD74HCT76	
PCF74HCT85	RCA	CD74HCT85	842
PCF74HCT86	RCA	CD74HCT86	842
S3101	AMD	31L01	
		AM27LS02	
		AM27S02	
		AM3101	
		AM3101A	
		SN7489-1	
	Fairchild	74S289	
	Intel	3101	
	Motorola	MC4064	
	National	DM7589	
	NEC	μPB2089	
		μPB2289	
	Signetics	3101	
		3101A	
		7489	
		N8225	
	TI	SN7489	951
S7281	Fairchild	54177	
	National	DM54177	
		DM7281	
	Raytheon	RM8281	
	Signetics	54177	
		S8281	
	TI	SN54177	984
S8202	Raytheon	RM8202	
S8224	Fairchild	5488	
	National	DM5488	
	TI	SN5488	
		SN5488A	
S8225	AMD	SN5489-1	
		SN54S289	
		SN74S289	
	Fairchild	54S289	
	National	DM5489	
		DM54S289	
		MM54S289	
	Signetics	54S289	
		54S301	532
		S82S25	
	TI	SN5489	
		SN54S289	
S8231	Raytheon	RM8231	
S82320	Fujitsu	MB7141E-W	
S8250	Raytheon	RM8250	
S8252	Fairchild	9031	
		9301	
	National	DM8301	
		DM9301	
	Raytheon	RC8252	
		RM8252	
	Signetics	N8252	
	TI	SN29301	
		SN39301	
S8262	Raytheon	RM8262	
S8266	Raytheon	RM8266	
S8270	Fairchild	54178	
	Raytheon	RM8270	
	TI	SN54178	984
S8271	Fairchild	54179	
	Raytheon	RM8271	
	TI	SN54179	985
S8277	Raytheon	RM8277	
S8280	Fairchild	54176	
	National	DM54176	
	Raytheon	RM8280	
	Signetics	54176	
	TI	SN54176	984
S8281	Fairchild	54177	
	National	DM54177	
		DM7281	
	Raytheon	RM8281	
	Signetics	54177	
		S7281	
	TI	SN54177	984
S82HS137	AMD	AM27S33M	
		AM27S41	3907
	Fairchild	93453M	
	Fujitsu	MB7122E-W	
		MB7152E-W	
	Harris	HM7643-2	3948
	MMI	53S441	4026
	Motorola	MCM7643M	
	National	DM54S573	4057
		DM54S573A	4057
	Signetics	S82S137	532

(Continued)

◆ Discontinued

The manufacturers report their devices can be used as direct replacements.
Performance details often differ, so compare the specifications considering your requirements.

Signetics (Cont'd)

Manufacturer Device	Replacement Source	Device	IC Master Page
S82HS137	**Signetics**	**S82S195**	**4182**
	TI	**TBP24S41M**	**542,4239**
S82HS181	**AMD**	**AM27S181M**	**3905**
	Fairchild	93451M	
	Fujitsu	MB7132-W	
		MB7132E-W	
	Harris	**HM7681-2**	**3949**
	MMI	5381-1	
	National	**DM77S181**	**4057**
	Raytheon	29631AM	
	Signetics	**S82S181**	**532**
	TI	TBP28S86M	
S82HS185	Fujitsu	MB7128E-W	
	Harris	**HM7685-2**	**3950**
	MMI	5389	
		5389-1	
	National	**DM77S185**	**4057**
	Raytheon	29651AM	
	Signetics	**S82S185**	**532**
	TI	SN54S454	
		TBP24S81M	**542,4239**
S82LS181	Fairchild	93L451	
	Signetics	N82LS181	
	TI	**TBP28L86**	**542,543,4242**
~~S82S09~~	~~Fairchild~~	~~93419~~	
	Signetics	N82S09	
S82S10	AMD	AM93415	
	AMI	4015	
	Fairchild	93415	
	Fujitsu	MBM93415	
	Hitachi	HM2510	
		HM2511	
	Intel	2115A	
	Motorola	MCM2115	
	Signetics	N82S10	
	TI	SN54S314	
		SN74S314	
S82S100	Fairchild	93459	
	Signetics	**N82S100**	**4153**
S82S101	Fairchild	93458	
	Signetics	**N82S101**	**4153**
S82S116	National	DM54S200	
	Signetics	54S200	
		54S201	
		S82S16	**532**
	TI	SN54S201	
S82S123	AMD	AM27LS19	
		AM27S19	
	Harris	HM7603	
	MMI	5331-1	
		53S081	**4026**
		6331-1	
		63S081	**4026**
	National	**DM74S288**	**4057**
		DM8578	
	Signetics	N82S123	
	TI	**TBP18S030**	**542,4237**
S82S126	**Harris**	**HM7610-2**	**3944**
	Intel	M3601	
	MMI	5300-1	
		53S140	**4026**
	National	**DM54S387**	**4057**
	TI	**TBP24SA10M**	**542,4238**
S82S129	**Harris**	**HM7611-2**	**3944**
	Intel	M3621	
	MMI	5301-1	
		53S141	**4026**
	National	**DM54S287**	**4057**
S82S130	Intel	M3602	
	MMI	5305-1	
		53S240	**4026**
	National	**DM54S570**	**4057**
S82S131	Intel	M3622	
	MMI	5306-1	
		53S241	**4026**
	National	**DM54S571**	**4057**
S82S136	Fujitsu	MB7121E-W	
	~~Harris~~	~~HM7642-2~~	~~3948~~
	Intel	M3605	
	MMI	5352-1	
	National	**DM54S572**	**4057**
	TI	**TBP24SA41M**	**4239**
S82S137	AMD	AM27S33M	
		AM27S41	**3907**
	Fairchild	93453M	
			(Continued)

Manufacturer Device	Replacement Source	Device	IC Master Page
S82S137	Fujitsu	MB7122E-W	
		MB7152E-W	
	Harris	**HM7643-2**	**3948**
	MMI	**53S441**	**4026**
	Motorola	MCM7643M	
	National	**DM54S573**	**4057**
		DM54S573A	**4057**
	Signetics	S82HS137	
		S82S195	**4182**
	TI	**TBP24S41M**	**542,4239**
S82S140	Intel	M3604	
	MMI	5340-1	
	National	**DM54S475**	**4057**
		DM77S295	
		DM87S295	
S82S141	Intel	M3624	
	MMI	5341-1	
	National	**DM54S474**	**4057**
	TI	**TBP28S46M**	**542,543,4245**
S82S146	Fujitsu	MB7123E-W	
	MMI	5348-1	
	National	**DM54S473**	**4057**
S82S147	Fujitsu	MB7124E-W	
		MBM7124	
	MMI	5349-1	
	National	**DM54S472**	**4057**
	TI	DM54S472	
~~S82S16~~	~~National~~	~~DM54S200~~	
	Signetics	54S200	
		54S201	
		S82S116	
	TI	SN54S201	
S82S17	National	S82S117	
		S82S17	
	TI	SN54S301	
S82S180	Fujitsu	MB7131E-W	
	MMI	5380-1	
	National	**DM77S180**	**4057**
	TI	**TBP28SA86M**	**4247**
S82S181	**AMD**	**AM27S181M**	**3905**
	Fairchild	93451M	
	Fujitsu	MB7132-W	
		MB7132E-W	
	Harris	**HM7681-2**	**3949**
	MMI	5381-1	
	National	**DM77S181**	**4057**
	Raytheon	29631AM	
	Signetics	S82HS181	
	TI	TBP28S86M	
S82S185	Fujitsu	MB7128E-W	
	Harris	**HM7685-2**	**3950**
	MMI	5389	
		5389-1	
	National	**DM77S185**	**4057**
	Raytheon	29651AM	
	Signetics	S82HS185	
	TI	SN54S454	
		TBP24S81M	**542,4239**
S82S190	**National**	**DM77S190**	**4057**
S82S191	**MMI**	**53S1681**	**4026**
	National	**DM77S191**	**4057**
S82S195	AMD	AM27S33M	
		AM27S41	**3907**
	Fairchild	93453M	
	Fujitsu	MB7122E-W	
		MB7152E-W	
	Harris	**HM7643-2**	**3948**
	MMI	**53S441**	**4026**
	Motorola	MCM7643M	
	National	**DM54S573**	**4057**
		DM54S573A	**4057**
	Signetics	S82HS137	
		S82S137	**532**
	TI	**TBP24S41M**	**542,4239**
S82S212	Fairchild	93479	
	Signetics	N82S212	
S82S23	AMD	AM27LS18	
	MMI	5330-1	
		53LS080	
		63LS080	
	National	**DM54S188**	**4057**
		DM7577	
S82S25	AMD	SN5489-1	
		SN54S289	
		SN74S289	
	Fairchild	54S289	
	National	DM5489	
		DM54S289	
			(Continued)

Manufacturer Device	Replacement Source	Device	IC Master Page
S82S25	National	MM54S289	
	Signetics	54S289	
		54S301	**532**
		S8225	
	TI	SN5489	
		SN54S289	
S82S2708	Harris	HM7608	
	Signetics	N82S2708	
	TI	**TBP28S2708**	**4248**
S82S30	Fairchild	93S12	
S82S321	Fujitsu	MB7142E-W	
	National	**DM77S321**	**4057**
S82S41	Motorola	SN54LS386	
	National	DM54LS386	
	Raytheon	RM8241	
	TI	**SN54LS386**	**1030**
S82S62	Fairchild	93S62	
S8T09	Raytheon	RM8T09	
S8T13	National	DS55121	
	TI	SN55121	
S8T22	Fairchild	74122	
		9601	
	National	DM8601	
		DM9601	
	Raytheon	RF8601	
		RF9601	
	Signetics	**N8T22**	**876**
	TI	**SN74122**	**961**
S8T95	National	DM7095	
	TI	SN54365	
S8T97	National	DM7097	
	TI	SN54367	
S8T98	National	DM7098	
	TI	SN54368	
SCC80C31	Intel	80C31	
SCC80C39	Intel	80C39	
SCC80C49	Intel	80C49	
SCC80C51	Intel	80C51	
SCN2651	National	INS2651	
	SMC	COM2651	
SCN2653	**Motorola**	**MC2653**	**1512**
		MC68653	**1506,1512**
SCN2661	**Motorola**	**MC2661**	**1512**
		MC68661	**1506,1512**
	SMC	COM2661	
	Synertek	**SY2661**	**1696**
SCN68000	Hitachi	HD68000	
	Mostek	MK68000	
	Motorola	MC68000	
	Rockwell	R68000	
	Thomson-CSF	EF68000	
SCN68120	**Motorola**	**MC68120**	**1501,1505,1509,1506**
SCN68230	Mostek	MK68230	
	Motorola	MC68230	
SCN68681	**Motorola**	**MC68681**	**1506,1512**
SCN8035	AMD	8035	
	Fujitsu	MBL8035	
	Intel	8035	
	National	INS8035	
	NEC	μPD8035	
SCN8039	AMD	D8039	
	Fujitsu	MBL8039	
	Intel	8039	
	National	INS8039	
	NEC	μPD8039	
SCN8048	AMD	8048	
	Fujitsu	MBL8048	
	Intel	8048	
	National	INS8048	
	NEC	μPD8048	
	Toshiba	TMP8048	
SCN8049	Fujitsu	MBL8049	
	Intel	8049	
	National	INS8049	
	NEC	μPD8049	
◆SD5000	SPI	SD5000	
	Siliconix	SI5000	
◆SD5001	SPI	SD5001	
	~~Siliconix~~	~~SI5001~~	
◆SD5002	SPI	SD5002	
	Siliconix	SI5002	
◆SD5200	SPI	SD5200	
	Siliconix	SI5200	
SE5008	**Datel**	**DAC-IC8BM**	**2863**
	Motorola	MC1508	
	PMI	DAC-1508	
			(Continued)

Manufacturer Device	Replacement Source	Device	IC Master Page
SE5008	Signetics	MC1508	
		SE5009	
SE5009	**Datel**	**DAC-IC8BM**	**2863**
	Motorola	MC1508	
	PMI	DAC-1508	
	Signetics	MC1508	
		SE5008	
SE5019	AMD	AM6080	
	Signetics	SE5118	
		SE5119	**3611**
SE5118	AMD	AM6080	
	Signetics	**SE5019**	**3607**
		SE5119	**3611**
SE5119	AMD	AM6080	
	Signetics	**SE5019**	**3607**
		SE5118	
SE529	National	LM161	
	PMI	CMP-05	
SE5410	**Datel**	**DAC-IC10BM**	**2863**
SE550	National	LM550	
SE5532	**Exar**	**XR5532**	**3378**
	Signetics	**NE5532**	**3644**
		NE5532A	**3644,3644**
		SE5532A	**526,3644,3644**
	TI	NE5532	
		NE5532A	
SE5532A	**Exar**	**XR5532**	**3378**
	~~Signetics~~	~~NE5532~~	~~3644~~
		NE5532A	**3644,3644**
		SE5532	**526,3644**
	TI	NE5532	
		NE5532A	
◆SE5533	**Exar**	**XR5533**	**3379**
	Signetics	**NE5533**	**3646**
		NE5533A	**3646**
	TI	NE5533	
◆SE5533A	**Exar**	**XR5533**	**3379**
	Signetics	**NE5533**	**3646**
		NE5533A	**3646**
	TI	NE5533	
SE5534	**Datel**	**AM-453-2M**	**2864**
	Raytheon	RM5534	
	Signetics	**SE5534A**	**526,3646**
SE5534A	**Datel**	**AM-453-2M**	**2864**
	Raytheon	RM5534	
	Signetics	**SE5534**	**526**
SE554A	TI	SE5534	
		SE5534A	
SE555	Exar	XR555M	
	Motorola	MC1555	
	Raytheon	RM555	
	TI	SE555	
SE556	AMD	LM556	
	Exar	XR556	
		XR556M	
	Fairchild	μA556	
	Motorola	MC3456	
		MC3556	
	National	LM556	
	Raytheon	RC556	
		RM556	
	Signetics	NE556	
	SiliconG	SG556	
	TI	NE556	
		SE556	
SE5560	Sprague	ULS-8160	
SE5561	Sprague	ULS-8161	
SE5563	Sprague	ULS-8163	
SE558	Exar	XR558	
	Signetics	**NE558**	**3670**
SE565	National	LM565	
	Signetics	NE565	
SE566	National	LM566	
	Signetics	NE566	
SE567	**Exar**	**XR2567**	**3367**
		XR567	
	MCE	MCE-567	
	National	LM567	
	Signetics	NE567	
SE592	Intersil	SE592	
	Motorola	SE592	
◆SG1524	~~Exar~~	~~XR1524~~	~~3381~~
	RCA	**CA1524**	**3602**
	SiliconG	SG1524	
	Sprague	ULS-8124	
	TI	SG1524	
	Unitrode	**UC1524**	**3709**
◆SG2524	**Exar**	**XR2524**	**3381**
	RCA	**CA2524**	**3602**
			(Continued)

◆ Discontinued

Bold face device numbers indicate manufacturers data is provided in the IC Master on the pages noted.

© IC MASTER 1984

Signetics (Cont'd)

Manufacturer Device	Replacement Source	Device	IC Master Page
◆SG2524	SiliconG	SG2524	
	Sprague	ULQ-8124	
	TI	SG2524	
SG3524	**Exar**	**XR3524**	**3381**
	RCA	**CA3524**	**3602**
	SiliconG	SG3524	
	Sprague	ULN-8124	
	TI	SG3524	
	Unitrode	UC3524	
SN54LS645-1	MMI	54LS645-1	
	TI	SN54LS645-1	
SN74LS645-1	MMI	74LS645-1	
	TI	**SN74LS645-1**	**1074**
SP380	National	DS8640	
◆SU536	Intersil	SU536	
TBA120	National	TBA120	
	Plessey	TBA120	
	Siemens	TBA120	
	Telefunken	TBA120	
◆TBA1441	Siemens	TBA1441	
◆TBA396	Motorola	TBA396	
◆TBA520	Plessey	TBA520	
◆TBA530	National	TBA530	
	Plessey	TBA530	
	Telefunken	TBA530	
TBA540	National	TBA540	
	Plessey	TBA540	
	Telefunken	TBA540	
◆TBA550	Plessey	TBA550	
◆TBA560	National	TBA560	
	Plessey	TBA560	
	Telefunken	TBA560	
TBA750	Plessey	TBA750	
◆TBA810	Fairchild	TBA810	
	RCA	CA810	
	SGS	TBA810	
◆TBA920	National	TBA920	
	Plessey	TBA920	
◆TBA990	National	TBA990	
	Plessey	TBA990	
	Telefunken	TBA990	
TCA440	Siemens	TCA440	
◆TCA800	Plessey	TCA800	
TDA1060	Ferranti	ZN1060	
	Philips	TDA1060	
	Signetics	**NE5560**	**3652**
	Sprague	ULN-8160	
◆TDA2522	National	TDA2522	
	Plessey	TDA2522	
	Siemens	TDA2522	
◆TDA2523	National	TDA2523	
	Plessey	TDA2523	
◆TDA2530	Hitachi	HN462532	
	Motorola	MCM2532	
	National	MM2532	
		NMC2532	
		TDA2530	
		TDA2532	
	Plessey	TDA2530	
	Siemens	TDA2530	
	SiliconG	SG2532	
	TI	TMS2532	
	Universal	UM2532	
◆TDA2532	Hitachi	HN462532	
	Motorola	MCM2532	
	National	MM2532	
		NMC2532	
		TDA2530	
		TDA2532	
	Plessey	TDA2530	
	Siemens	TDA2530	
	SiliconG	SG2532	
	TI	TMS2532	
	Universal	UM2532	
TDA2540	National	TDA2540	
	Plessey	TDA2540	
TDA2541	National	TDA2541	
	Plessey	TDA2541	
TDA2560	National	TDA2560	
	Plessey	TDA2560	
	Siemens	TDA2560	
◆TDA2590	Plessey	TDA2590	
◆TDA2591	National	TDA2591	
	Plessey	TDA2591	
	Telefunken	TDA2591	
TDA2593	National	TDA2593	
	Plessey	TDA2593	
	Telefunken	TDA2593	
◆TDA2600	AMD	AM9218	
	Fairchild	3516	

(Continued)

Manufacturer Device	Replacement Source	Device	IC Master Page
◆TDA2600	Fairchild	68316	
		F3516	
		F35316	
		F68316	**1464**
	GI	R03-9316	
	GTEMicro	2316	
	Intel	2316	
	Mostek	MK34000	
	Motorola	MCM68316	
		MCM68A316	
		MM2316	
	National	MM52116	
		MM5258	
	NCR	2316	
		NCR2316	
	NEC	μPD2316	
	OKI	**MSM2916**	**4118**
	Rockwell	R2316	
	SGS	M2316	
	TI	SBP8316	
	Toshiba	TMM331A	
		TMM334	
TDA3570	Panasonic	AN5310	
◆ULN2001	Exar	XR2001	
		XR2201	
	Fairchild	9665	
	Motorola	**MC1411**	**3064**
		ULN2001	
		XR2201	
	NEC	μPA2001	
	RIFA	PBD352301	
	Sanyo	LB1231	
	SGS	L201	
	SiliconG	SG2001	
	Sprague	ULN-2001	
		ULN-2021	
		ULQ-2002	
		ULS-2001	
	TI	ULN2001	
	Toshiba	TD62001	
ULN2003	Exar	XR2003	
		XR2004	
		XR2203	
	Fairchild	9667	
		MC1413	
	Mitsubishi	M54523	
	Motorola	**MC1413**	**3064**
		ULN2003	
	Sanyo	LB1233	
	SGS	L203	
	Signetics	NE5603	
	SiliconG	SG2003	
	Sprague	ULN-2003	
		ULQ-2003	
		ULQ-2004	
		ULS-2003	
		ULS-2004	
	TI	ULN2003	
	Toshiba	TD62003	
ULN2004	Exar	XR2204	
	Fairchild	9668	
	Mitsubishi	M54526	
	Motorola	**MC1416**	**3064**
		ULN2004	
	Sanyo	LB1234	
	SGS	L204	
	Signetics	NE5604	
	SiliconG	SG2004	
	Sprague	ULN-2004	
		ULS2004	
	TI	ULN2004	
	Toshiba	TD62004	
◆ULN6128	**Exar**	**XR6128**	**3376**
	Sprague	UDN-6128	
μA723	Fairchild	μA723	
	Hitachi	HA17723	
	Intersil	LM723	
	Motorola	**MC1723**	**3532**
	National	LM723	
	Raytheon	RC723	
		RM723	
	RCA	**CA723**	**3602**
		LM723	
	SGS	L123	
	SiliconG	SG723	
	TI	μA723	
	Thomson-CSF		
		SFC2723	
μA733	Fairchild	μA733	
	Hitachi	HA17733	
	Intersil	μA733	
	Motorola	MC1733	

(Continued)

Manufacturer Device	Replacement Source	Device	IC Master Page
μA733	Motorola	NE592	
	National	LM733	
	SiliconG	SG733	
	TI	μA733	
μA740	Intersil	LM740	
μA741	**AD**	**AD741**	**3351**
	Fairchild	3871	
		μA741	
	Hitachi	HA17741	
	Intersil	AD741	
		ICL741	
	MicroPwr	MP5501	
		MP5502	**3529**
		OP-02	**3529**
	Mostek	MK3871	
	Motorola	LM741	
		MC1741	
	National	LM741	
	NEC	μPC151	
		μPC741	
	PMI	OP-01	
		OP-02	**3566**
		PM741	
		SSS741	
	Raytheon	RC741	
		RM741	
	RCA	CA3056	
		CA741	
	SiliconG	SG300	
		SG741	
	TI	μA741	
	Thomson-CSF		
		SFC2741	
	Toshiba	TA7504	
μA747	AMD	747	
	Fairchild	μA747	
	Hitachi	HA17747	
	MicroPwr	MP0P04	
	Motorola	MC1747	
	National	LM747	
	NEC	μPC251	
	PMI	**OP-04**	**3566**
		PM747	
	Raytheon	RC747	
		RM747	
	RCA	CA747	
	SiliconG	SG747	
	TeledyneS	747	
	TI	μA747	
◆μA748	AMD	LM201	
	AD	AD201	
	Fairchild	μA201	
		μA748	
	Intersil	LM748	
		μA748	
	Motorola	LM201	
		MC1748	
	National	LM201	
		LM748	
	Plessey	SL748	
	RCA	CA201	
		CA748	
		LM748	
	SiliconG	SG201	
		SG748	
	TI	LM201	
		SN72748P	
		μA748	
	Thomson-CSF		
		SFC2201	
		SFC2748	
μA758	Motorola	μA758	
	National	LM1800	
	RCA	CA758	
	TI	SN76111	
		SN76116	

Silicon General

Manufacturer Device	Replacement Source	Device	IC Master Page
SG101	AMD	LM101	
	AD	AD101	
	Fairchild	μA101	
	Intersil	AD101	
	LinearTech	LM101	
	Motorola	LM101	
	Raytheon	LM101	
	TI	LM101	
	Thomson-CSF		
		SFC2101	
SG105	AMD	LM105	
	Fairchild	μA105	
	Intersil	LM105	

(Continued)

Manufacturer Device	Replacement Source	Device	IC Master Page
SG105	National	LM105	
	Thomson-CSF		
		SFC2105	
SG107	AMD	LM107	
	AD	**AD741S**	**3351**
	Intersil	LM107	
	LinearTech	LM107	
	National	LM107	
	Raytheon	LM107	
	TI	LM107	
	Thomson-CSF		
		SFC2107	
SG109	Fairchild	μA109	
	Motorola	LM109	
	National	LM109	
	TI	SN55109	
	Thomson-CSF		
		SFC2109	
SG110	AMD	LM110	
	Intersil	LM110	
	National	LM110	
SG111	AMD	LM111	
	AD	AD111	
	Fairchild	μA111	
	Intersil	LM111	
	Motorola	LM111	
	National	LM111	
	Raytheon	LM111	
	Signetics	LM111	
	TI	LM111	
	Thomson-CSF		
		SFC2111	
SG117	LinearTech	LM117	
	MCE	MCE-LM117	
	Motorola	**LM117**	**3532**
	National	LM117	
	TI	LM117	
SG120-12	National	LM120-12	
SG120-15	National	LM120-15	
SG120-5	Fairchild	μA7905	
		μA79M05	
	Lambda	LMC7905	
		LμA7905	
	Motorola	MC7905	
	National	LM320MP5	
		LM7905	
		LM79M05	
	SiliconG	SG320-05	
		SG320P-5	
		SG7905	
	TI	μA7905	
SG123	LinearTech	LM123	
	Motorola	**LM123**	**3531**
		MC78T05	
	National	LM123	
	TI	SN55123	
SG124	AMD	LM124A	
	Motorola	LM124A	
	National	LM124A	
	RCA	CA124A	
	Signetics	LM124A	
	TI	LM124A	
SG139	AMD	LM139	
	Fairchild	μA139	
	Motorola	LM139	
	National	LM139	
	PMI	CMP-04	
		PM139	
	Raytheon	LM139	
	RCA	**CA139**	**3599**
	Signetics	LM139	
	TI	LM139	
SG139A	AMD	LM139A	
	Motorola	LM139A	
	National	LM139A	
	PMI	CMP-04	
		PM139A	
	RCA	**CA139A**	**3599**
	TI	LM139A	
SG140-05	National	LM140-05	
SG140-12	National	LM140-12	
SG140-15	National	LM140-15	
SG1403	**AD**	**AD1403**	**2842**
	Motorola	**MC1403**	**3535**
SG1436	**Datel**	**AM-464-2**	**2864**
	Harris	HA-2645	
	Motorola	MC1436	
		MC1439	
	National	LM1436	
		LM343	
	TeledyneP	1332	

◆ Discontinued

The manufacturers report their devices can be used as direct replacements.
Performance details often differ, so compare the specifications considering your requirements.

Silicon General (Cont'd)

Manufacturer Device	Replacement Source	Device	IC Master Page
SG1456	**Datel**	**AM-460-2**	**2864**
	Harris	HA-2605	
	Intersil	HA2605	
	Motorola	MC1456	
	TI	MC1456	
SG1458	AMD	AM1458	
	Exar	XR1458	
		XR4558	
	Fairchild	μA1458	
	Harris	HA-2655	
	Hitachi	HA17458	
	MicroPwr	MPOP14	
	Motorola	MC1458	
		MC4558C	
		RC4558	
	National	LM1458	
	NEC	μPC1458	
		μPC4558	
	PMI	PM1458	
	Raytheon	RC1458	
		RC4558	**3592**
	RCA	CA1458	
		LM1458	
		RC4558	
		SSS1458	
	Sanyo	LA6458A	
	Signetics	MC1458	
		NE4558	
	TI	MC1458	
		RC4558	
SG1468	Exar	XR1468	
		XR4195	
	Motorola	MC1468	
	Raytheon	RC4195	
	SiliconG	SG2501A	
		SG3501A	
		SG4501	
SG1488	AMD	MC1488	
	Exar	**XR1488**	**3384**
	Fairchild	μA1488	
	Hitachi	HD75188	
	Motorola	**MC1488**	**3064**
	National	DS1488	
	Raytheon	RM1488	
	Signetics	MC1488	
	TI	MC1488	
		SN75188	
		SN85188	
SG1489	AMD	MC1489	
	Exar	XR1489	
	Fairchild	μA1489	
	Hitachi	HD75189	
	Motorola	**MC1489**	**3064**
	National	DS1489	
	Signetics	MC1489	
	TI	SN75189	
		SN85189	
SG1489A	**Exar**	**XR1489A**	**3384**
	Fairchild	μA1489A	
	Motorola	**MC1489A**	**3064**
	National	DS1489A	
	Signetics	MC1489A	
	TI	MC1489A	
		SN75189A	
SG1495	Motorola	MC1495	
SG1496	Fairchild	μA796	
	Motorola	MC1496	
	National	LM1496	
	Plessey	SL1496	
	Signetics	MC1496	
SG150	LinearTech	LM150	
	Motorola	**LM150**	**3532**
	National	LM150	
SG1501A	Exar	XR1568	
	Motorola	MC1568	
	Raytheon	RM4195	
	SiliconG	SG1568	
SG1524	**Exar**	**XR1524**	**3381**
	RCA	**CA1524**	**3602**
	Sprague	ULS-8124	
	TI	SG1524	
	Unitrode	**UC1524**	**3709**
SG1525A	**Exar**	**XR1525A**	**3381**
	Motorola	**SG1525A**	**3533**
	Siliconix	**PWM25A**	**3081**
	Sprague	ULS-8125	
	TI	SG1525A	
	Unitrode	**UC1525A**	**3709**
SG1527A	**Motorola**	**SG1527A**	**3533**
	Siliconix	**PWM27A**	**3081**
	Sprague	ULS-8125	

(Continued)

Manufacturer Device	Replacement Source	Device	IC Master Page
SG1527A	TI	SG1527A	
	Unitrode	**UC1527A**	**3709**
SG1536	**Datel**	**AM-464-2M**	**2864**
	Exar	**XR1527A**	**3381**
	Harris	**HA-2640**	**3412**
	Motorola	MC1536	
	National	LM143	
		LM1536	
SG1543	**Exar**	**XR1543**	**3382**
SG1556	**Harris**	**HA-2600**	**3406**
	Intersil	HA2600	
	Motorola	MC1556	
	TeledyneP	1326	
	TI	MC1556	
SG1558	AMD	AM1558	
	Exar	XR1558	
	Fairchild	μA1558	
	Harris	**HA-2650**	**3414**
	Motorola	MC1558	
		MC4558	
		RC1558	
	National	LM1558	
	PMI	**OP-14**	**3566**
		PM1558	
	Raytheon	RC1558	
		RM1558	
		RM4558	
	RCA	CA1558	
		LM1558	
		SSS1558	
	Signetics	MC1558	
	TI	MC1558	
		RM4558	
SG1568	Exar	XR1568	
	Motorola	MC1568	
	Raytheon	RM4195	
	SiliconG	SG1501A	
SG1595	Motorola	MC1595	
SG1596	Motorola	MC1596	
	National	LM1596	
	Plessey	SL1596	
	Signetics	MC1596	
SG2001	Exar	XR2001	
		XR2201	
	Fairchild	9665	
	Motorola	**MC1411**	**3064**
		ULN2001	
		XR2201	
	NEC	μPA2001	
	RIFA	PBD352301	
	Sanyo	LB1231	
	SGS	L201	
	Sprague	ULN-2001	
		ULN-2021	
		ULQ-2002	
		ULS-2001	
	TI	ULN2001	
	Toshiba	TD62001	
SG2002	RIFA	PBD352314	
	Sprague	ULN-2022	
		ULS-2002	
	TI	SN75467	
SG2003	Exar	XR2003	
		XR2004	
		XR2203	
	Fairchild	9667	
		MC1413	
	Mitsubishi	M54523	
	Motorola	**MC1413**	**3064**
		ULN2003	
	Sanyo	LB1233	
	SGS	L203	
	Signetics	NE5603	
		ULN2003	
	Sprague	ULN-2003	
		ULQ-2003	
		ULQ-2004	
		ULS-2003	
		ULS-2004	
	TI	ULN2003	
	Toshiba	TD62003	
SG2004	Exar	XR2204	
	Fairchild	9668	
	Mitsubishi	M54526	
	Motorola	**MC1416**	**3064**
		ULN2004	
	Sanyo	LB1234	
	SGS	L204	
	Signetics	NE5604	
		ULN2004	
	Sprague	ULN-2004	
		ULS2004	

(Continued)

Manufacturer Device	Replacement Source	Device	IC Master Page
SG2004	TI	ULN2004	
	Toshiba	TD62004	
SG201	AMD	LM201	
	AD	AD201	
	Fairchild	μA201	
		μA748	
	Intersil	LM748	
		μA748	
	Motorola	LM201	
		MC1748	
	National	LM201	
		LM748	
	Plessey	SL748	
	RCA	CA201	
		CA748	
		LM748	
	SiliconG	SG748	
	TI	LM201	
		SN72748P	
		μA748	
	Thomson-CSF		
		SFC2201	
		SFC2748	
SG202	AMD	LM202	
	National	LM202	
SG204	National	LM204	
	Thomson-CSF		
		SFC2204	
SG205	AMD	LM205	
	National	LM205	
	Thomson-CSF		
		SFC2205	
SG207	AMD	LM207	
	National	LM207	
	RCA	CA207	
	TI	SN55207	
	Thomson-CSF		
		SFC2207	
SG208	AMD	LM208	
	AD	**AD208**	**3351**
	Fairchild	μA208	
	LinearTech	OP-05	
	MicroPwr	MP5505	
		MP5508	**3529**
		MPLM208	**3529**
	Motorola	LM208	
	National	LM208	
	PMI	**OP-05**	**3566**
		PM208	
	Raytheon	**OP-05**	**3592**
	TI	μA714	
	Thomson-CSF		
		SFC2208	
SG209	AMD	LM209	
	Fairchild	μA209	
	Lambda	LLM209	
	Motorola	LM209	
	National	LM209	
	Thomson-CSF		
		SFC2209	
SG210	AMD	LM210	
	National	LM210	
	Thomson-CSF		
		SFC2210	
SG211	AMD	LM211	
	AD	AD211	
	Motorola	LM211	
	National	LM211	
	RCA	LM211	
	Signetics	LM211	
	TI	LM211	
	Thomson-CSF		
		SFC2211	
SG212	AMD	LM212	
SG217	MCE	MCE-LM217	
	Motorola	**LM217**	**3532**
	National	LM217	
	TI	LM217	
	Thomson-CSF		
		TDE0117	
SG220	Lambda	LLM220	
	National	LM220	
SG220-05	National	LM220-05	
SG220-12	National	LM220-12	
SG220-15	National	LM220-15	
SG223	Lambda	LLM223	
	Motorola	**LM223**	**3531**
	National	LM223	
	Thomson-CSF		
		TDE0123	
SG224	AMD	LM224	
	Fairchild	μA224	
	Motorola	LM224	

(Continued)

Manufacturer Device	Replacement Source	Device	IC Master Page
SG224	National	LM224	
	Raytheon	LM224	
	RCA	CA224	
	Signetics	LM224	
	TI	LM224	
	Thomson-CSF		
		TDE0124	
SG239	AMD	LM239	
	Fairchild	μA239	
	Motorola	LM239	
	National	LM239	
	PMI	CMP-04	
		PM239	
	Raytheon	LM239	
	RCA	**CA239**	**3599**
	Signetics	LM239	
	TI	LM239	
	Thomson-CSF		
		TDE0139	
SG239A	AMD	LM239A	
	Motorola	LM239A	
	National	LM239A	
	PMI	CMP-04	
	RCA	**CA239A**	**3599**
SG250	**Motorola**	**LM250**	**3532**
	National	LM250	
SG2501A	Exar	XR1468	
		XR4195	
	Motorola	MC1468	
	Raytheon	RC4195	
	SiliconG	SG1468	
		SG3501A	
		SG4501	
SG2524	**Exar**	**XR2524**	**3381**
	RCA	**CA2524**	**3602**
	Sprague	ULQ-8124	
	TI	SG2524	
SG2525A	**Exar**	**XR2525A**	**3381**
	Motorola	**SG2525A**	**3533**
	Siliconix	PWM25B	
	Siltronics	PWM25B	
	Sprague	ULQ-8125	
SG2526	**Motorola**	**SG2526**	**3533**
	Sprague	ULQ-8126	
	Unitrode	UC2526	
SG2527A	**Exar**	**XR2527A**	**3381**
	Motorola	**SG2527A**	**3533**
	Siliconix	PWM27B	
	Siltronics	PWM27B	
	Sprague	ULQ-8127	
	Unitrode	UC2527	
SG2532	Hitachi	HN462532	
	Motorola	MCM2532	
	National	MM2532	
		NMC2532	
		TDA2530	
		TDA2532	
	Plessey	TDA2530	
	Siemens	TDA2530	
	TI	TMS2532	
	Universal	UM2532	
SG2543	**Exar**	**XR2543**	**3382**
SG2841	Sprague	UDN-2841	
	TI	UDN2841	
SG300	**AD**	**AD741**	**3351**
	Fairchild	3871	
		μA741	
	Hitachi	HA17741	
	Intersil	AD741	
		ICL741	
	MicroPwr	MP5501	
		MP5502	**3529**
		OP-02	**3529**
	Mostek	MK3871	
	Motorola	LM741	
		MC1741	
	National	LM741	
	NEC	μPC151	
		μPC741	
	PMI	OP-01	
		OP-02	**3566**
		PM741	
		SSS741	
	Raytheon	RC741	
		RM741	
	RCA	CA3056	
		CA741	
	Signetics	μA741	
	SiliconG	SG741	
	TI	μA741	

(Continued)

◆ Discontinued

Bold face device numbers indicate manufacturers data is provided in the IC Master on the pages noted.

Silicon General (Cont'd)

Manufacturer Device	Replacement Source	Device	IC Master Page
SG300	Thomson-CSF		
		SFC2741	
	Toshiba	TA7504	
SG3001	Hitachi	HA1110	
	RCA	CA3001	
SG301	AD	AD301	
	Fairchild	μA301A	
	Intersil	AD301	
	LinearTech	LM301	
		LM301A	
	Motorola	LM301	
	National	LM301	
		LM301A	
	NEC	μPC157	
		μPC301	
	Raytheon	LM301	
	RCA	CA301	
		LM301	
	TI	LM301	
		LM301A	
	Thomson-CSF		
		SFC2301	
	Toshiba	TA7506	
SG302	AMD	LM302	
	Intersil	LM302	
	National	LM302	
SG304	National	LM304	
	NEC	μPC142	
	Thomson-CSF		
		SFC2304	
SG3045	Fairchild	μA3045	
	Hitachi	HA1127	
	National	LM3045	
	Plessey	SL3045	
		SL3145	
	RCA	**CA3045**	**3601**
	Sanyo	LA3045	
	SiliconG	SG3821	
	Sprague	ULS-2045	
SG3046	Fairchild	μA3046	
	Motorola	MC3346	
	National	LM3046	
	Plessey	SL3046	
		SL3146	
	RCA	**CA3046**	**3601**
		CA3146	**3601**
	Sanyo	LA3046	
	SiliconG	SG3146	
		SG3821	
	Sprague	ULN-2046	
SG305	AMD	LM305	
	Fairchild	μA305	
	Intersil	LM305	
	National	LM305	
	NEC	μPC141	
	Thomson-CSF		
		SFC2305	
SG3058	**RCA**	**CA3058**	**3603**
SG3059	Motorola	CA3059	
	RCA	**CA3059**	**3603**
SG307	AMD	LM307	
	AD	**AD741J**	**3351**
	Intersil	LM307	
	LinearTech	LM307	
	Motorola	LM307	
	National	LM307	
	Raytheon	LM307	
	RCA	CA307	
	TI	LM307	
	Thomson-CSF		
		SFC2307	
SG3079	Motorola	CA3079	
	RCA	**CA3079**	**3603**
SG308	AMD	LM308	
	AD	**AD308**	**3351**
	Burr-Brown	3500	
		3501	
	Fairchild	μA308	
	Intersil	AD308	
		LM308	
	MicroPwr	MP5505	
		MPLM308	**3529**
	Motorola	LM308	
	National	LM308	
	Raytheon	LM308	
	Thomson-CSF		
		SFC2308	
SG3081	Plessey	SL3081	
	RCA	**CA3081**	**3601**

(Continued)

Manufacturer Device	Replacement Source	Device	IC Master Page
SG3081	Signetics	CA3081	
	Sprague	ULN-2081	
SG3082	Plessey	SL3082	
	RCA	**CA3082**	**3601**
	Sprague	ULN-2082	
SG3083	Plessey	SL3083	
		SL3183	
	RCA	CA3083	
		CA3183	**3601**
	SiliconG	SG3183	
	Sprague	ULN-2083	
SG3086	Fairchild	μA3086	
	Motorola	MC3386	
	National	LM3086	
	Plessey	SL3086	
	RCA	**CA3086**	**3601**
	Sanyo	LA3086	
	SiliconG	SG3886	
	Sprague	ULN-2086	
SG309	AMD	LM309	
	Fairchild	μA309	
		μA7805	
	Lambda	LLM309	
		LMC7805	
		LμA7805	
	Motorola	LM309	
		MC7805	**3531**
	National	LM309	
		LM7805	
	NEC	μPC7805	
	SGS	L7805	
		L7810	
	SiliconG	SG340-05	
		SG340-5	
	TI	μA7805	
	Thomson-CSF		
		SFC2309	
	Toshiba	TA78005	
SG310	AMD	LM310	
	Intersil	LM310	
	National	LM310	
	PMI	BUF-03	
	Thomson-CSF		
		SFC2310	
SG311	AMD	LM311	
	AD	AD311	
	Fairchild	μA2903	
		μA311	
	Intersil	LM311	
	Motorola	LM2903	
		LM311	
	National	LM2903	
		LM311	
	NEC	μPC271	
		μPC311	
	Raytheon	LM311	
	RCA	**CA311**	**3598**
		LM311	
	Signetics	LM2903	
		LM311	
	TI	LM2903	
		LM311	
	Thomson-CSF		
		SFC2311	
		SFC3111	
SG3118	AMD	LM312	
	National	LM312	
SG3146	Fairchild	μA3046	
	Motorola	MC3346	
	National	LM3046	
	Plessey	SL3046	
		SL3146	
	RCA	**CA3046**	**3601**
		CA3146	**3601**
	Sanyo	LA3046	
	SiliconG	SG3046	
		SG3821	
	Sprague	ULN-2046	
SG317	Fairchild	μA317	
	LinearTech	LM317	
	MCE	MCE-LM317	
	Motorola	**LM317**	**3532**
	National	LM317	
	TI	LM317	
	Thomson-CSF		
		TDB0117	
SG3183	Plessey	SL3083	
		SL3183	
	RCA	CA3083	
		CA3183	**3601**
	SiliconG	SG3083	
	Sprague	ULN-2083	

Manufacturer Device	Replacement Source	Device	IC Master Page
SG320-05	Fairchild	μA7905	
		μA79M05	
	Lambda	LMC7905	
		LμA7905	
	Motorola	MC7905	
	National	LM320MP5	
		LM7905	
		LM79M05	
	SiliconG	SG120-5	
		SG320P-5	
		SG7905	
	TI	μA7905	
SG320-15	Fairchild	μA7915	
	Lambda	LμA7915	
	Motorola	MC7915	
	National	LM320-15	
		LM320T15	
		LM7915	
	SiliconG	SG7915	
	TI	LM320-5	
		μA7915	
	Thomson-CSF		
		TDB2915	
SG320-5	Motorola	MC7952	
	National	LM320-5	
	SiliconG	SG320-5	
	TI	LM320-5	
	Thomson-CSF		
		TDB2905	
	Motorola	MC7952	
	National	LM320-5	
	SiliconG	SG320-5	
	TI	LM320-5	
	Thomson-CSF		
		TDB2905	
SG320P-12	Fairchild	μA7912	
		μA79M12	
	Lambda	LμA7912	
	Motorola	MC7912	
	National	LM320MP12	
		LM7912	
		LM79M12	
	SiliconG	SG7912	
	TI	LM320-12	
		μA7912	
	Thomson-CSF		
		TDB2912	
SG320P-5	Fairchild	μA7905	
		μA79M05	
	Lambda	LMC7905	
		LμA7905	
	Motorola	MC7905	
	National	LM320MP5	
		LM7905	
		LM79M05	
	SiliconG	SG120-5	
		SG320-05	
		SG7905	
	TI	μA7905	
SG323	Fairchild	SH0323	
		SH323	
		μA78H05	
	Lambda	LAS1405	
		LAS1905	
	LinearTech	LM323	
	Micropac	M78H05	
	Motorola	**LM323**	**3531**
		MC78T05C	
	National	LM323	
SG324	AMD	LM324	
	Exar	**XR3403**	**3378**
		XR3403C	
	Fairchild	μA324	
		μA3403	
	Motorola	LM324	
		MC3403	
	National	LM324	
	NEC	μPC324	
	Raytheon	LM324	
		RC3403	
		RC4137	
	RCA	CA324	
		LM324	
	Sanyo	LA6324	
	Signetics	LM324	
		MC3403	
	TI	LM324	
		MC3403	
	Thomson-CSF		
		TDB0124	
SG3302	Fairchild	μA2901	
		μA3302	

(Continued)

Manufacturer Device	Replacement Source	Device	IC Master Page
SG3302	Motorola	LM2901	
		MC3302	
	National	LM2901	
		LM3302	
	NEC	μPC2901	
	PMI	CMP-04	
	Raytheon	LM2901	
		RC3302	
	RCA	CA3302	
	Signetics	LM2901	
		MC3302	
	TI	LM2901	
		LM3302	
SG339	AMD	LM339	
		LM339A	
	Fairchild	μA339	
	Hitachi	HA17901	
	Motorola	LM339	
	National	LM339	
	NEC	μPC339	
	PMI	CMP-04	
		PM339A	
	Raytheon	LM339	
	RCA	**CA339**	**3599**
		CA339A	**3599**
		LM339	
	TI	LM339	
	Thomson-CSF		
		TDB0139	
SG340-05	AMD	LM309	
	Fairchild	μA309	
		μA7805	
	Lambda	LLM309	
		LMC7805	
		LμA7805	
	Motorola	LM309	
		MC7805	**3531**
	National	LM309	
		LM7805	
	NEC	μPC7805	
	SGS	L7805	
		L7810	
	SiliconG	SG309	
		SG340-5	
	TI	μA7805	
	Thomson-CSF		
		SFC2309	
	Toshiba	TA78005	
SG340-15	Fairchild	μA7815	
		μA78L15	
	Lambda	LMC7815	
		LμA7815	
	Motorola	**MC7815**	**3531**
		MC78L15	
	National	LM340-15	
		LM340LA-15	
		LM340T-15	
		LM7815	
		LM78L15	
	NEC	μPC7815	
		μPC78L15	
	SGS	L7815	
	SiliconG	SG7815	
	TI	LM340-15	
		μA7815	
		μA78L15	
	Thomson-CSF		
		SFC2815	
	Toshiba	TA78015	
SG340-18	Fairchild	μA7818	
	Lambda	LMC7818	
	NEC	μPC7818	
	SiliconG	SG7818	
	TI	LM340-18	
		μA7818	
SG340-5	AMD	LM309	
	Fairchild	μA309	
		μA7805	
	Lambda	LLM309	
		LMC7805	
		LμA7805	
	Motorola	LM309	
		MC7805	**3531**
	National	LM309	
		LM7805	
	NEC	μPC7805	
	SGS	L7805	
		L7810	
	SiliconG	SG309	
		SG340-05	
	TI	μA7805	

(Continued)

◆ Discontinued

The manufacturers report their devices can be used as direct replacements.
Performance details often differ, so compare the specifications considering your requirements.

Silicon General (Cont'd)

Manufacturer Device	Replacement Source	Device	IC Master Page
SG340-5	Thomson-CSF		
		SFC2309	
	Toshiba	TA78005	
SG340-6	Fairchild	μA7806	
	Lambda	LMC7806	
		LμA7806	
	Motorola	**MC7806**	**3531**
	SiliconG	SG7806	
	TI	μA7806	
SG340-8	Fairchild	μA7808	
	Lambda	LMC7808	
		LμA7808	
	Motorola	**MC7808**	**3531**
	NEC	μPC7808	
	SiliconG	SG7808	
	TI	LM340-8	
		μA7808	
SG3423	Motorola	MC3423	
	TI	MC3423	
SG350	Fairchild	μA78HGA	
	Lambda	LAS14U	
		LAS19U	
	LinearTech	LM350	
	Motorola	**LM350**	**3532**
	National	LM350	
	TI	LM350	
SG3501A	Exar	XR1468	
		XR4195	
	Motorola	MC1468	
	Raytheon	RC4195	
	SiliconG	SG1468	
		SG2501A	
		SG4501	
SG3503	**Exar**	**XR3503**	**3378**
	Motorola	MC3503	
	Raytheon	RC3503	
		RM3503	
		RM4137	
	Signetics	MC3503	
	TI	MC3503	
SG3523	Motorola	MC3523	
	TI	MC3523	
SG3524	**Exar**	**XR3524**	**3381**
	RCA	**CA3524**	**3602**
	Signetics	**SG3524**	**3661**
	Sprague	ULN-8124	
	TI	SG3524	
	Unitrode	UC3524	
SG3525	Siltronics	PWM25C	
	Sprague	ULN-8125	
	TI	SG3525	
	Unitrode	UC3525	
SG3525A	**Exar**	**XR3525A**	**3381**
	Motorola	**SG3525A**	**3533**
	Siliconix	**PWM25C**	**3081**
	TI	SG3525A	
SG3526	Sprague	ULN-8126	
		ULS-8126	
	Unitrode	**UC1526**	**3709**
		UC526	
SG3527	Siltronics	PWM27C	
	Sprague	ULN-8127	
	TI	SG3527	
SG3527A	**Exar**	**XR3527A**	**3381**
	Motorola	**SG3527A**	**3533**
	Siliconix	**PWM27C**	**3081**
	TI	SG3527A	
SG3532	AMD	AM9232	
	AMI	S68322	
		S68A332	
	Fairchild	F3532	
	GI	R094132	
		T094132	
	GTEMicro	2332	
	Hitachi	HN46332	
	Intersil	IM7332	
	Motorola	MC68332	
		MCM68332	
		MCM68A332	**4048**
	National	MM52132	
	NCR	2332	
		NCR2332	
	NEC	**μPD2332**	**4100**
	OKI	**MSM2932**	**4118**
	RCA	**CDM5333**	**1593**
	Rockwell	R2332	
	SSS	SCM23C32	
	SMC	ROM4732	
	Synertek	**SY2332**	**4211**
	TI	**TMS4732**	**4226**

(Continued)

Manufacturer Device	Replacement Source	Device	IC Master Page
SG3532	Toshiba	TM2332	
		TMM333	
	Universal	UM2332	
	VTI	**VT2332**	**4249**
SG3543	**Exar**	**XR3543**	**3382**
SG3635	Sprague	UDN-2935	
SG3821	Fairchild	μA3046	
	Motorola	MC3346	
	National	LM3046	
	Plessey	SL3046	
		SL3146	
	RCA	**CA3046**	**3601**
		CA3146	**3601**
	Sanyo	LA3046	
	SiliconG	SG3046	
		SG3146	
	Sprague	ULN-2046	
SG3822	Fairchild	μA3054	
	Motorola	CA3054	
	National	LM3054	
	RCA	CA3054	
	Sprague	ULN-2054	
	Thomson-CSF		
		SFC2054	
SG3851	Exar	XR2011	
	Sprague	ULN-2011	
SG3852	Exar	XR2012	
	Sprague	ULN-2012	
		ULS-2012	
SG3853	Exar	XR2014	
	Sprague	ULN-2014	
		ULS-2013	
SG3854	Sprague	ULS-2014	
SG3886	Fairchild	μA3086	
	Motorola	MC3386	
	National	LM3086	
	Plessey	SL3086	
	RCA	**CA3086**	**3601**
	Sanyo	LA3086	
	SiliconG	SG3086	
	Sprague	ULN-2086	
SG4136	**Exar**	**XR4136M**	**3378**
	Raytheon	RM4136	
	TI	RM4136	
SG4136C	Exar	XR4136	
	Fairchild	μA4136	
	MicroPwr	MP5509	
	PMI	OP-09	
		PM4136	
	Raytheon	RC4136	
	TI	RC4136	
SG4194	Exar	XR4194	
	MCE	MCE-4194	
	Raytheon	RC4194	
		RM4194	
SG4250	Fairchild	μA776	
	Harris	**HA-2720**	**3416**
	Intersil	ICL8021	
		LM4250	
	Motorola	MC1776	
	National	LM4250	
	Solitron	UC4250	
SG4501	Exar	XR1468	
		XR4195	
	Motorola	MC1468	
	Raytheon	RC4195	
	SiliconG	SG1468	
		SG2501A	
		SG3501A	
SG55138	TI	SN55138	
SG55154	TI	SN55154	
SG5520	National	LM5520	
	TI	SN5520	
SG5521	National	LM5521	
SG5522	Motorola	MC5522	
		MC5523	
	National	LM5522	
	TI	SN5522	
SG5523	National	LM5523	
SG55236	TI	SN55236	
SG5524	Fairchild	MC5524	
	Motorola	MC5524	
	National	LM5524	
	Raytheon	RM5524	
	TI	SN5524	
SG5525	Fairchild	MC5525	
	Motorola	MC5525	
	National	LM5525	
SG5526	TI	SN5526	
SG5527	TI	SN5527	
SG5528	Fairchild	MC5528	
	Motorola	MC5528	

(Continued)

Manufacturer Device	Replacement Source	Device	IC Master Page
SG5528	National	LM5528	
	TI	SN5528	
SG5529	Fairchild	MC5529	
	Motorola	MC5529	
	National	LM5529	
SG55325	Fairchild	MC55325	
	Motorola	MC55325	
	National	DS55325	
		LM55325	
	Signetics	55325	
	TI	SN55325	
SG5534	Fairchild	MC5534	
	Motorola	MC5534	
	National	LM5534	
SG5535	Motorola	MC5535	
	National	LM5535	
	TI	SN5535	
SG5536	TI	SN5536	
SG5537	TI	SN5537	
SG5538	National	LM5538	
SG5539	Motorola	MC5539	
	National	LM5539	
SG55450	Fairchild	55450	
	Signetics	55450	
	TI	SN55450	
SG55451	Fairchild	55451	
	National	DS55451	
	Signetics	55451	
	TI	SN55451	
SG55452	Fairchild	55452	
	National	DS55452	
	Signetics	55452	
	TI	SN55452	
SG55453	Fairchild	55453	
	National	DS55453	
		LM55453	
	Signetics	55453	
	TI	SN55453	
SG55454	National	DS55454	
	Signetics	55454	
	TI	SN55454	
SG55460	National	DS55460	
	TI	SN55460	
SG55461	National	DS55461	
	TI	SN55461	
SG55462	National	DS55462	
	TI	SN55462	
SG55463	National	DS55463	
	TI	SN55463	
SG55464	National	DS55464	
	TI	SN55464	
SG55471	TI	SN55471	
SG55472	TI	SN55472	
SG55473	TI	SN55473	
SG55474	TI	SN55474	
SG555	Cherry	CS555	
	Exar	XR555	
	Fairchild	μA555	
	Hitachi	HA17555	
	Motorola	MC1455	
	National	LM555	
	NEC	μPC1555	
	Raytheon	RC555	
	RCA	CA355	
		CA555	**3604**
	Sanyo	LB8555	
	Signetics	NE555	
	TI	NE555	
SG556	AMD	LM556	
	Exar	XR556	
		XR556M	
	Fairchild	μA556	
	Motorola	MC3456	
		MC3556	
	National	LM556	
	Raytheon	RC556	
		RM556	
	Signetics	NE556	
		SE556	**526**
	TI	NE556	
		SE556	
SG6118	**Exar**	**XR6118**	**3376**
	Sanyo	LB1290	
	Sprague	UDN-6118	
SG710	Fairchild	μA710	
	Motorola	LM710	
		MC1710	
	National	LM710	
	PMI	CMP-01	
		CMP-02	

(Continued)

Manufacturer Device	Replacement Source	Device	IC Master Page
SG710	TI	μA710	
	Thomson-CSF		
		SFC2710	
SG711	Fairchild	μA711	
	Motorola	MC1711	
	National	LM711	
	TI	μA711	
	Thomson-CSF		
		SFC2711	
SG723	Fairchild	μA723	
	Hitachi	HA17723	
	Intersil	LM723	
	Motorola	**MC1723**	**3532**
	National	LM723	
	Raytheon	RC723	
		RM723	
	RCA	**CA723**	**3602**
		LM723	
	SGS	L123	
	Signetics	μA723	
	TI	μA723	
	Thomson-CSF		
		SFC2723	
SG733	Fairchild	μA733	
	Hitachi	HA17733	
	Intersil	μA733	
	Motorola	MC1733	
		NE592	
	National	LM733	
	Signetics	μA733	
	TI	μA733	
SG741	**AD**	**AD741**	**3351**
	Fairchild	3871	
		μA741	
	Hitachi	HA17741	
	Intersil	AD741	
		ICL741	
	MicroPwr	MP5501	
		MP5502	**3529**
		OP-02	**3529**
	Mostek	MK3871	
	Motorola	LM741	
		MC1741	
	National	LM741	
	NEC	μPC151	
		μPC741	
	PMI	OP-01	
		OP-02	**3566**
		PM741	
		SSS741	
	Raytheon	RC741	
		RM741	
	RCA	CA3056	
		CA741	
	Signetics	μA741	
	SiliconG	SG300	
	TI	μA741	
	Thomson-CSF		
		SFC2741	
	Toshiba	TA7504	
SG747	AMD	747	
	Fairchild	μA747	
	Hitachi	HA17747	
	MicroPwr	MPOP04	
	Motorola	MC1747	
	National	LM747	
	NEC	μPC251	
	PMI	**OP-04**	**3566**
		PM747	
	Raytheon	RC747	
		RM747	
	RCA	CA747	
	Signetics	μA747	
	TeledyneS	747	
	TI	μA747	
SG748	AMD	LM201	
	AD	AD201	
	Fairchild	μA201	
		μA748	
	Intersil	LM748	
		μA748	
	Motorola	LM201	
		MC1748	
	National	LM201	
		LM748	
	Plessey	SL748	
	RCA	CA201	
		CA748	
		LM748	
	SiliconG	SG201	
	TI	LM201	
		SN72748P	

(Continued)

◆ Discontinued

Bold face device numbers indicate manufacturers data is provided in the IC Master on the pages noted.

© IC MASTER 1984

Silicon General (Cont'd)

Manufacturer Device	Replacement Source	Device	IC Master Page
SG748	TI	μA748	
	Thomson-CSF		
		SFC2201	
		SFC2748	
SG75138	TI	SN75138	
SG75154	Fairchild	75154	
	Hitachi	HD75154	
	National	DS75154	
	TI	SN75154	
SG7520	Fairchild	7520	
	Motorola	MC7520	
	TI	SN7520	
SG7521	Fairchild	7521	
	Motorola	MC7521	
	National	LM7521	
	TI	SN7521	
SG7522	Motorola	MC7522	
	TI	SN7522	
SG7523	Motorola	MC7523	
	National	LM7523	
	Raytheon	RC7523	
	TI	SN7523	
SG75236	TI	SN75236	
SG7524	Fairchild	75S24	
	Hitachi	HA1902	
	Motorola	MC7524	
	National	DS75S24	
	Signetics	7524	
	TI	SN75224	
		SN7524	
SG7525	AMD	7525	
	Fairchild	7525	
	Motorola	MC7525	
	National	LM7525	
SG7528	Motorola	MC7528	
	Raytheon	RC7528	
	TI	SN7528	
	Thomson-CSF		
		SFC2528	
SG7529	Fairchild	7529	
	Motorola	MC7529	
	National	LM7529	
	Raytheon	RC7529	
SG75325	Motorola	MC75325	
	National	DS75325	
	TI	SN75325	
SG7534	Motorola	MC7534	
SG7535	Motorola	MC7535	
	National	LM7535	
SG7538	Fairchild	7538	
	Motorola	MC7538	
	National	LM7538	
SG7539	Fairchild	7539	
	Motorola	MC7539	
	National	LM7539	
SG7541	Fairchild	75471	
	SiliconG	SG75471	
	TI	SN75471	
SG7542	Fairchild	75472	
	SiliconG	SG75472	
	TI	SN75472	
SG75450	Fairchild	75450	
	Motorola	MC75450	
	National	DS75450	
	TI	SN75450	
SG75451	Fairchild	75451	
	Motorola	MC75451	
	National	DS75451	
	TI	SN75451	
SG75452	Fairchild	75452	
	Hitachi	HD75452	
	Motorola	MC75452	
	National	DS75452	
	TI	SN75452	
SG75453	Fairchild	75453	
	Hitachi	HD75453	
	Motorola	MC75453	
	National	DS75453	
		LM75453	
	TI	SN75453	
SG75454	Motorola	MC75454	
	National	DS75454	
	TI	SN75454	
SG75460	Motorola	MC75460	
	National	DS75460	
	TI	SN75460	
SG75461	Fairchild	75461	
	Motorola	MC75401	
		MC75461	
		(Continued)	

Manufacturer Device	Replacement Source	Device	IC Master Page
SG75461	National	DS75461	
	TI	SN75461	
SG75462	Fairchild	75462	
	Motorola	MC75402	
		MC75462	
	National	DS75462	
	TI	SN75462	
SG75463	Motorola	MC75403	
		MC75463	
	National	DS75463	
	TI	SN75463	
SG75464	Motorola	MC75404	
		MC75464	
	National	DS75464	
		SG75464	
	TI	SN75464	
SG75470	TI	SN75470	
SG75471	Fairchild	75471	
	SiliconG	SG7541	
	TI	SN75471	
SG75472	Fairchild	75472	
	SiliconG	SG7542	
	TI	SN75472	
SG75473	TI	SN75473	
SG75474	Motorola	MC74HC10	
	National	MM74HC10	
	RCA	CD74HC10	
	SPI	**SP74HC10**	**848**
	Signetics	PCF74HC10	
	Toshiba	TC40H010	
SG777	Intersil	μA777	
	TI	μA777	
SG7806	Fairchild	μA7806	
	Lambda	LMC7806	
		LμA7806	
	Motorola	**MC7806**	**3531**
	SiliconG	SG340-6	
	TI	μA7806	
SG7808	Fairchild	μA7808	
	Lambda	LMC7808	
		LμA7808	
	Motorola	**MC7808**	**3531**
	NEC	μPC7808	
	SiliconG	SG340-8	
	TI	LM340-8	
		μA7808	
SG7812	Fairchild	μA7812	
	Lambda	LMC7812	
		LμA7812	
	Motorola	**MC7812**	**3531**
	National	LM7812	
	NEC	μPC7812	
	SGS	L7812	
	TI	μA7812	
	Toshiba	TA78012	
SG7815	Fairchild	μA7815	
		μA78L15	
	Lambda	LMC7815	
		LμA7815	
	Motorola	**MC7815**	**3531**
		MC78L15	
	National	LM340-15	
		LM340LA-15	
		LM340T-15	
		LM7815	
		LM78L15	
	NEC	μPC7815	
		μPC78L15	
	SGS	L7815	
	SiliconG	SG340-15	
	TI	LM340-15	
		μA7815	
		μA78L15	
	Thomson-CSF		
		SFC2815	
	Toshiba	TA78015	
SG7818	Fairchild	μA7818	
	Lambda	LMC7818	
	NEC	μPC7818	
	SiliconG	SG340-18	
	TI	LM340-18	
		μA7818	
SG7824	Fairchild	μA7824	
	Lambda	LMC7824	
		LμA7824	
	Motorola	**MC7824**	**3532**
	NEC	μPC7824	
	SGS	L7824	
	TI	LM340-24	
		μA7824	
SG7905	Fairchild	μA7905	
		μA79M05	
		(Continued)	

Manufacturer Device	Replacement Source	Device	IC Master Page
SG7905	Lambda	LMC7905	
		LμA7905	
	Motorola	MC7905	
	National	LM320MP5	
		LM7905	
		LM79M05	
	SiliconG	SG120-5	
		SG320-05	
		SG320P-5	
	TI	μA7905	
	Fairchild	MC7905	
	Lambda	LMC7905	
	Motorola	MC7905	
SG7908	Fairchild	MC7908	
		μA7908	
		μA79M08	
	Lambda	LMC7908	
		LμA7908	
	Motorola	MC7908	
	TI	μA7908	
		μA79M08	
SG7912	Fairchild	μA7912	
		μA79M12	
	Lambda	LμA7912	
	Motorola	MC7912	
	National	LM320MP12	
		LM7912	
		LM79M12	
	SiliconG	SG320P-12	
	TI	LM320-12	
		μA7912	
	Thomson-CSF		
		TDB2912	
SG7915	Fairchild	μA7915	
	Lambda	LμA7915	
	Motorola	MC7915	
	National	LM320-15	
		LM320T15	
		LM7915	
	SiliconG	SG320-15	
	TI	LM320-5	
		μA7915	
	Thomson-CSF		
		TDB2915	

Silicon Systems Inc.

Manufacturer Device	Replacement Source	Device	IC Master Page
104	Fujitsu	MB4111	
105	Fujitsu	MB4112	
SSI8500	Motorola	MC8500	
SSI8502	Motorola	MC8502	
SSI8520	Motorola	MC8520	

Siliconix

Manufacturer Device	Replacement Source	Device	IC Master Page
◆CA3089	Hitachi	HA1137	
		HA1230	
	National	CA3089	
		LM3089	
	RCA	CA3089	
	Sanyo	LA1230	
		LA3089	
	SGS	TCA3089	
		TDA1200	
	Signetics	CA3089	
	Telefunken	U417	
	TI	SN76689	
D123	Intersil	D123	
D125	Intersil	D125	
	TeledyneC	CDR125	
DF320	ITT	DF320	
	Mitel	MT4320	
	Nitron	NC2320	
◆DF412	Hughes	HLCD7211	
	Intersil	ICL7211	
	RCA	**CD22104**	**839**
		CD22105	**839**
	TeledyneS	TSC7211	
◆DG111	Intersil	DG111	
	Siliconix	DGM111	
DG123	Intersil	DG123	
DG125	Intersil	DG125	
DG126	Intersil	DG126	
	National	AH0126	
DG129	Intersil	DG129	
	National	AH0129	
DG133	Intersil	DG133	
	National	AH0133	
DG134	Intersil	DG134	
	National	AH0134	
DG139	Intersil	DG139	
	National	AH0139	

Manufacturer Device	Replacement Source	Device	IC Master Page
DG140	Intersil	DG140	
	National	AH0140	
DG141	Intersil	DG141	
	National	AH0141	
DG142	Intersil	DG142	
	National	AH0142	
DG143	Intersil	DG143	
	National	AH0143	
DG144	Intersil	DG144	
	National	AH0144	
DG145	Intersil	DG145	
	National	AH0145	
DG146	Intersil	DG146	
	National	AH0146	
DG151	Intersil	DG151	
	National	AH0151	
DG152	Intersil	DG152	
	National	AH0152	
DG153	Intersil	DG153	
	National	AH0153	
DG154	Intersil	DG154	
	National	AH0154	
		AM0154	
DG161	Intersil	DG161	
	National	AH0161	
DG162	Intersil	DG162	
	National	AH0162	
DG163	Intersil	DG163	
	National	AH0163	
		AM0163	
DG164	Intersil	DG164	
	National	AH0164	
		AM0164	
DG172	Intersil	DG118	
DG180	Intersil	DG180	
DG181	**Harris**	**HI381**	**2877**
		HI5048	
	Intersil	DG181	
		IH5048	
	Siliconix	DG381	
DG182	Intersil	DG182	
	TI	TL182	
DG183	Intersil	DG183	
DG184	**Harris**	**HI384**	**2877**
		HI5049	
	Intersil	DG184	
		IH5049	
	Siliconix	DG384	
DG185	Harris	HI5045	
	Intersil	DG185	
		IH5045	
	Siliconix	DG5045	
	TI	TL185	
DG186	Intersil	DG186	
DG187	**Harris**	**HI387**	**2877**
		HI5050	
	Intersil	DG187	
		IH5050	
	Siliconix	DG387	
DG188	Harris	HI5042	
	Intersil	DG188	
		IH5042	
	Siliconix	DG5042	
	TI	TL188	
DG189	Intersil	DG189	
DG190	Harris	HI5051	
	Intersil	DG190	
		IH5051	
DG191	Harris	HI5043	
	Intersil	DG191	
		IH5043	
	Siliconix	DG243	
		DG5043	
DG200	AD	ADG200	
	Harris	HI200	
	Intersil	IH200	
	MicroPwr	MP200	
	PMI	SW-05	
DG202	National	LF13202	
	PMI	SW-02	
DG211	Intersil	IH5052	
DG243	Harris	HI5043	
	Intersil	DG191	
		IH5043	
	Siliconix	DG191	
		DG5043	
DG300	**Harris**	**HI300**	**2872**
DG301	**Harris**	**HI301**	**2872**
DG302	**Harris**	**HI302**	**2872**
DG303	**Harris**	**HI303**	**2872**
DG304	**Harris**	**HI304**	**2872**
DG305	**Harris**	**HI305**	**2872**

◆ Discontinued

The manufacturers report their devices can be used as direct replacements.
Performance details often differ, so compare the specifications considering your requirements.

Siliconix (Cont'd)

Manufacturer Device	Replacement Source	Device	IC Master Page
DG306	**Harris**	**HI306**	**2872**
DG307	**Harris**	**HI307**	**2872**
DG381	**Harris**	**HI381**	**2877**
		HI5048	
	Intersil	DG181	
		IH5048	
	Siliconix	DG181	
DG384	**Harris**	**HI384**	**2877**
		HI5049	
	Intersil	DG184	
		IH5049	
	Siliconix	DG184	
DG387	**Harris**	**HI387**	**2877**
		HI5050	
	Intersil	DG187	
		IH5050	
	Siliconix	DG187	
DG390	**Harris**	**HI390**	**2877**
DG5040	Harris	HI5040	
	Intersil	IH5040	
DG5041	Harris	HI5041	
	Intersil	IH5041	
DG5042	Harris	HI5042	
	Intersil	DG188	
		IH5042	
	Siliconix	DG188	
	TI	TL188	
DG5043	Harris	HI5043	
	Intersil	DG191	
		IH5043	
	Siliconix	DG191	
		DG243	
DG5044	Harris	HI5044	
	Intersil	IH5044	
DG5045	Harris	HI5045	
	Intersil	DG185	
		IH5045	
	Siliconix	DG185	
	TI	TL185	
DG507	AD	AD7507	
	Burr-Brown	**MPC8D**	**2850**
	Datel	**MVD-807**	**2864**
		MXD-807	**2864**
	Harris	HI507	
		HI507A	
	Intersil	IH6216	
	MicroPwr	MP7507	
	PMI	MUX-28	
	Siliconix	DG507A	
	TeledyneP	4551	
DG507A	AD	AD7507	
	Burr-Brown	**MPC8D**	**2850**
	Datel	**MVD-807**	**2864**
		MXD-807	**2864**
	Harris	HI507	
		HI507A	
	Intersil	IH6216	
	MicroPwr	MP7507	
	PMI	MUX-28	
	Siliconix	DG507	
	TeledyneP	4551	
DG508	AD	AD7501	
	Burr-Brown	MPC8S	
	Datel	**MX-808**	**2864**
	Harris	HI-508	
		HI508	
		HI508A	
	Intersil	IH6108	
	MicroPwr	MP7501	
		MP7508	
	National	LF11508	
		LF13508	
	PMI	DMX-88	
		MUX-08	
		MUX-88	
	Siliconix	DG508A	
	TeledyneP	4554	
DG508A	AD	AD7501	
	Burr-Brown	MPC8S	
	Datel	**MX-808**	**2864**
	Harris	HI-508	
		HI508	
		HI508A	
	Intersil	IH6108	
	MicroPwr	MP7501	
		MP7508	
	National	LF11508	
		LF13508	
	PMI	DMX-88	
		MUX-08	
		MUX-88	
	Siliconix	DG508A	
	TeledyneP	4554	
DG508A	PMI	MUX-88	
	Siliconix	DG508	
	TeledyneP	4554	
DG509	**Burr-Brown**	**MPC4D**	**2850**
	Datel	**MXD-409**	**2864**
	Harris	HI-509	
		HI509	
		HI509A	
	Intersil	IH6208	
	MicroPwr	MP7509	
	National	LF11509	
		LF13509	
	PMI	MUX-24	
	Siliconix	DG509A	
	TeledyneP	4553	
DG509A	**Burr-Brown**	**MPC4D**	**2850**
	Datel	**MXD-409**	**2864**
	Harris	HI-509	
		HI509	
		HI509A	
	Intersil	IH6208	
	MicroPwr	MP7509	
	National	LF11509	
		LF13509	
	PMI	MUX-24	
	Siliconix	DG509	
	TeledyneP	4553	
DGM111	Intersil	DG111	
G115	Intersil	G115	
G116	Intersil	G116	
G117	Intersil	G117	
G118	Intersil	G118	
G119	Intersil	G119	
G123	Intersil	G123	
◆G125	Intersil	G125	
◆G126	Intersil	G126	
◆G127	Intersil	G127	
◆G128	Intersil	G128	
◆G129	Intersil	G129	
◆G130	Intersil	G130	
◆G131	Intersil	G131	
◆G132	Intersil	G132	
L144	Siltronics	SL144	
◆LD131	**Intersil**	**ICL7106**	**2995**
	MicroPwr	**MP7138**	**3046**
	TeledyneS	TSC7106	
MP7622	AD	AD7622	
	HybridSys	HS3120	
	MicroPwr	MP7622	
PWM25A	**Exar**	**XR1525A**	**3381**
	Motorola	**SG1525A**	**3533**
	SiliconG	SG1525A	
	Sprague	ULS-8125	
	TI	SG1525A	
	Unitrode	**UC1525A**	**3709**
PWM25B	**Exar**	**XR2525A**	**3381**
	Motorola	**SG2525A**	**3533**
	SiliconG	SG2525A	
	Siltronics	PWM25B	
	Sprague	ULQ-8125	
PWM25C	**Exar**	**XR3525A**	**3381**
	Motorola	**SG3525A**	**3533**
	SiliconG	SG3525A	
	TI	SG3525A	
PWM27A	**Motorola**	**SG1527A**	**3533**
	SiliconG	SG1527A	
	Sprague	ULS-8125	
	TI	SG1527A	
	Unitrode	**UC1527A**	**3709**
PWM27B	**Exar**	**XR2527A**	**3381**
	Motorola	**SG2527A**	**3533**
	SiliconG	SG2527A	
	Siltronics	PWM27B	
	Sprague	ULQ-8127	
	Unitrode	UC2527	
PWM27C	**Exar**	**XR3527A**	**3381**
	Motorola	**SG3527A**	**3533**
	SiliconG	SG3527A	
	TI	SG3527A	
◆SG555	Cherry	CS555	
	Exar	XR555	
	Fairchild	μA555	
	Hitachi	HA17555	
	Motorola	MC1455	
	National	LM555	
	NEC	μPC1555	
	Raytheon	RC555	
	RCA	CA355	
		CA555	**3604**
	Sanyo	LB8555	
	Signetics	NE555	
◆SG555	SiliconG	SG555	
	TI	NE555	
SI3002	Fairchild	SH3002	
SI3705	AMD	AM3705	
◆SI452	Intersil	MM452	
◆SI455	Intersil	MM455	
SI5000	SPI	SD5000	
SI5001	SPI	SD5001	
SI5002	SPI	SD5002	
SI5200	SPI	SD5200	

Siltronics

Manufacturer Device	Replacement Source	Device	IC Master Page
PWM25B	**Exar**	**XR2525A**	**3381**
	Motorola	**SG2525A**	**3533**
	SiliconG	SG2525A	
	Siliconix	PWM25B	
	Sprague	ULQ-8125	
PWM25C	SiliconG	SG3525	
	Sprague	ULN-8125	
	TI	SG3525	
	Unitrode	UC3525	
PWM27B	**Exar**	**XR2527A**	**3381**
	Motorola	**SG2527A**	**3533**
	SiliconG	SG2527A	
	Siliconix	PWM27B	
	Sprague	ULQ-8127	
	Unitrode	UC2527	
PWM27C	SiliconG	SG3527	
	Sprague	ULN-8127	
	TI	SG3527	
SL144	Siliconix	L144	

Solid State Scientific

Manufacturer Device	Replacement Source	Device	IC Master Page
SCL4000	Motorola	MC14000	
	National	CD4000	
	RCA	CD4000	
	SGS	HCF4000	
	Signetics	HEF400	
	Solitron	CM4000	
SCL4001	Fairchild	F4001	
	Hitachi	HD14001	
	Motorola	MC14001	
	National	CD4001	
		MM74C02	
	OKI	MSM4001	
	RCA	CD4001	
	Sanyo	LC4001B	
	SGS	HCF4001	
	Signetics	HEF4001	
	Solitron	CM4001	
	Toshiba	TC4001	
SCL4002	Fairchild	F4002	
	Hitachi	HD14002	
	Motorola	MC14002	
	National	CD4002	
	RCA	CD4002	
	SGS	HCF4002	
	Signetics	HEF4002	
	Solitron	CM4002	
	Toshiba	TC4002	
SCL4006	Fairchild	F4006	
	Hitachi	HD14006	
	National	CD4006	
	SGS	HCF4006	
	Signetics	HEF4006	
	Solitron	CM4006	
	Toshiba	TC4006	
SCL4007	Fairchild	F4007	
	Hitachi	HD14007	
	Motorola	MC14007	
	National	CD4007	
	RCA	CD4007	
	SGS	HCF4007	
	Signetics	HEF4007	
	Solitron	CM4007	
	Toshiba	TC4007	
SCL4008	Fairchild	F4008	
	Hitachi	HD14008	
	Motorola	MC14008	
	National	CD4008	
		MM74C83	
	RCA	CD4008	
	SGS	HCF4008	
	Signetics	HEF4008	
	Solitron	CM4008	
	Toshiba	TC4008	
SCL4009	Hitachi	HD14009	
	National	CD4009	
	RCA	CD4049	
	SGS	HCF4009	
SCL4009	Solitron	CM4009	
	Toshiba	TC4009	
SCL4010	Hitachi	HD14010	
	National	CD4010	
	RCA	CD4010	
	SGS	HCF4010	
	Solitron	CM4010	
	Toshiba	TC4010	
SCL4011	Fairchild	F4011	
	Hitachi	HD14011	
	Motorola	MC14011	
	National	CD4011	
		MM74C00	
	OKI	MSM4011	
	RCA	CD4011	
	Sanyo	LC4011	
	SGS	HCF4011	
	Signetics	HEF4011	
	Solitron	CM4011	
	Toshiba	TC4011	
SCL4012	Fairchild	F4012	
	Hitachi	HD14012	
	Motorola	MC14012	
	National	CD4012	
	RCA	CD4012	
	SGS	HCF4012	
	Signetics	HEF4012	
	Solitron	CM4012	
	Toshiba	TC4012	
SCL4013	Fairchild	F4013	
	Hitachi	HD14013	
	Motorola	MC14013	
	National	CD4013	
		MM74C74	
	OKI	MSM4013	
	RCA	CD4013	
	Sanyo	LC4013	
	SGS	HCF4013	
	Signetics	HEF4013	
	Solitron	CM4013	
	Toshiba	TC4013	
SCL4014	Fairchild	F4014	
	Hitachi	HD14014	
	Motorola	MC14014	
	National	CD4014	
	RCA	CD4014	
	SGS	HCF4014	
	Signetics	HEF4014	
	Solitron	CM4014	
	Toshiba	TC4014	
SCL4015	Fairchild	F4015	
	Hitachi	HD14015	
	Motorola	MC14015	
	National	CD4015	
		MM74C164	
	OKI	MSM4015	
	RCA	CD4015	
	Sanyo	LC4015	
	SGS	HCF4015	
	Signetics	HEF4015	
	Solitron	CM4015	
	Toshiba	TC4015	
SCL4016	Fairchild	F4016	
		F4066	
	Hitachi	HD14016	
		HD14066	
	Motorola	MC14016	
		MC14066	
	National	CD4016	
		CD4066	
	RCA	CD4016	
		CD4066	
	Sanyo	LC4016	
		LC4066	
	SGS	HCF4016	
		HCF4066	
	Signetics	**HEF4016**	**864**
		HEF4066	
	SSS	SCL4066	
	Solitron	CM4016	
		CM4066	
		HCF4016	
	Toshiba	TC4016	
		TC4066	
SCL4017	Fairchild	F4017	
	Hitachi	HD14017	
	Motorola	MC14017	
	National	CD4017	
	RCA	CD4017	
	SGS	HCF4017	
	Signetics	HEF4017	

(Continued)

◆ Discontinued

Bold face device numbers indicate manufacturers data is provided in the IC Master on the pages noted.

© IC MASTER 1984

Solid State Scientific (Cont'd)

Manufacturer Device	Replacement Source	Device	IC Master Page
SCL4017	Solitron	CM4017	
	Toshiba	TC4017	
SCL4018	Fairchild	F4018	
	Hitachi	HD14018	
	Motorola	MC14018	
	National	CD4018	
	RCA	CD4018	
	SGS	HCF4018	
	Signetics	HEF4018	
	Solitron	CM4018	
	Toshiba	TC4018	
SCL4019	Fairchild	F4019	
	National	CD4019	
	OKI	MSM4019	
	RCA	CD4019	
	Sanyo	LC4019	
	SGS	HCF4019	
	Signetics	HEF4019	
	Solitron	CM4019	
	Toshiba	TC4019	
SCL4020	Fairchild	F4020	
	Hitachi	HD14020	
	Motorola	MC14020	
	National	CD4020	
	RCA	CD4020	
	SGS	HCF4020	
	Signetics	HEF4020	
	Solitron	CM4020	
	Toshiba	TC4020	
SCL4021	Fairchild	F4021	
	Hitachi	HD14021	
	Motorola	MC14021	
	National	CD4021	
	RCA	CD4021	
	SGS	HCF4021	
	Signetics	HEF4021	
	Toshiba	TC4021	
SCL4022	Fairchild	F4022	
	Hitachi	HD14022	
	Motorola	MC14022	
	National	CD4022	
	RCA	CD4022	
	SGS	HCF4022	
	Signetics	HEF4022	
	Solitron	CM4022	
	Toshiba	TC4022	
SCL4023	Fairchild	F4023	
	Hitachi	HD14023	
	Motorola	MC14023	
	National	CD4023	
		MM74C10	
	RCA	CD4023	
	SGS	HCF4023	
	Signetics	HEF4023	
	Solitron	CM4023	
	Toshiba	TC4023	
SCL4024	Fairchild	F4024	
	Hitachi	HD14024	
	Motorola	MC14024	
	National	CD4024	
	RCA	CD4024	
	SGS	HCF4024	
	Signetics	HEF4024	
	Solitron	CM4024	
	Toshiba	TC4024	
SCL4025	Fairchild	F4025	
	Hitachi	HD14025	
	Motorola	MC14025	
	National	CD4025	
	RCA	CD4025	
	SGS	HCF4025	
	Signetics	HEF4025	
	Solitron	CM4025	
	Toshiba	TC4025	
SCL4026	RCA	CD4026	
	SGS	HCF4026	
	Solitron	CM4026	
SCL4027	Fairchild	F4027	
	Hitachi	HD14027	
	Motorola	MC14027	
	National	CD4027	
		MM74C76	
	OKI	MSM4027	
	RCA	CD4027	
	Sanyo	LC4027	
	SGS	HCF4027	
	Signetics	HEF4027	
	Solitron	CM4027	
SCL4028	Fairchild	F4028	
	Hitachi	HD14028	

(Continued)

Manufacturer Device	Replacement Source	Device	IC Master Page
SCL4028	Motorola	MC14028	
	National	CD4028	
		MM74C42	
	OKI	MSM4028	
	Sanyo	LC4028	
	SGS	HCF4028	
	Signetics	HEF4028	
	Solitron	CM4028	
	Toshiba	TC4028	
SCL4029	Fairchild	F4029	
	Motorola	MC14029	
	National	CD40192	
		CD4029	
	RCA	CD40192	
		CD4029	
	SGS	HCF40192	
		HCF4029	
	Signetics	HEF40192	
	SSS	SCL4192	
	Solitron	CM4029	
	Toshiba	TC40192	
		TC4029	
SCL4030	Fairchild	F4030	
	National	CD4030	
	RCA	CD4030	
	SGS	HCF4030	
	Signetics	HEF4030	
	Solitron	CM4030	
	Toshiba	TC4030	
SCL4033	RCA	CD4033	
	SGS	HCF4033	
	Solitron	CM4033	
SCL4034	Fairchild	F4034	
	Hitachi	HD14034	
	Motorola	MC14034	
	National	CD4034	
	RCA	CD4034	
	SGS	HCF4034	
	Solitron	CM4034	
	Toshiba	TC4034	
SCL4040	Fairchild	F4040	
	Hitachi	HD14040	
	Motorola	MC14040	
	National	CD4040	
	RCA	CD4040	
	SGS	HCF4040	
	Signetics	HEF4040	
	Solitron	CM4040	
	Toshiba	TC4040	
SCL4041	Fairchild	F4041	
	National	CD4041	
	RCA	CD4041	
	SGS	HCF4041	
	Signetics	HEF4041	
	Solitron	CM4041	
SCL4042	Fairchild	F4042	
	Hitachi	HD14042	
	Motorola	MC14042	
	National	CD4042	
	RCA	CD4042	
	SGS	HCF4042	
	Signetics	HEF4042	
	Solitron	CM4042	
	Toshiba	TC4042	
SCL4043	Hitachi	HD14043	
	Motorola	MC14043	
	National	CD4043	
	RCA	CD4043	
	SGS	HCF4043	
	Signetics	HEF4043	
	Solitron	CM4043	
	Toshiba	TC4043	
SCL4046	Fairchild	F4046	
	Hitachi	HD14046	
	Motorola	MC14046	
	National	CD4046	
	RCA	CD4046	
	SGS	HCF4046	
	Solitron	CM4046	
SCL4047	Fairchild	F4047	
	National	CD4047	
	RCA	CD4047	
	SGS	HCF4047	
	Signetics	HEF4047	
	Solitron	CM4047	
	Toshiba	TC4047	
SCL4049	Fairchild	F4049	
	Hitachi	HD14049	
	Motorola	MC14049	
	National	CD4049	
	OKI	MSM4049	
	RCA	CD4049	

(Continued)

Manufacturer Device	Replacement Source	Device	IC Master Page
SCL4049	Sanyo	LC4049	
	SGS	HCF4049	
	Signetics	HEF4049	
	Solitron	CM4049	
	Toshiba	TC4049	
SCL4050	Fairchild	F4050	
	Hitachi	HD14050	
	Motorola	MC14050	
	National	CD4050	
	RCA	CD4050	
	SGS	HCF4050	
	Signetics	HEF4050	
	Solitron	CM4050	
	Toshiba	TC4050	
SCL4051	Fairchild	F4051	
	Hitachi	HD14051	
	Motorola	MC14051	
	National	CD4051	
	RCA	CD4051	
	SGS	HCF4051	
	Signetics	HEF4051	
	Solitron	CM4051	
	Toshiba	TC4051	
SCL4052	AD	AD7502	
	Hitachi	HD14052	
	MicroPwr	MP7502	
	National	CD4052	
	Solitron	CM4052	
	Toshiba	TC4052	
SCL4053	Fairchild	F4053	
	Hitachi	HD14053	
	Motorola	MC14053	
	National	CD4053	
	RCA	CD4053	
	SGS	HCF4053	
	Signetics	HEF4053	
	Solitron	CM4053	
	Toshiba	TC4053B	
SCL4060	Motorola	MC14060	
	National	CD4060	
	RCA	CD4060	
	SGS	HCF4060	
	Signetics	HEF4060	
SCL4066	Fairchild	F4016	
		F4066	
	Hitachi	HD14016	
		HD14066	
	Motorola	MC14016	
		MC14066	
	National	CD4016	
		CD4066	
	RCA	CD4016	
		CD4066	
	Sanyo	LC4016	
		LC4066	
	SGS	HCF4016	
		HCF4066	
	Signetics	HEF4016	864
		HEF4066	
	SSS	SCL4016	
	Solitron	CM4016	
		CM4066	
		HCF4016	
	Toshiba	TC4016	
		TC4066	
SCL4068	Fairchild	F4068	
	Hitachi	HD14068	
	Motorola	MC14068	
	RCA	CD4068	
	SGS	HCF4068	
	Signetics	HEF4068	
	Solitron	CM4068	
	Toshiba	TC4068	
SCL4069	Fairchild	F4069	
	Hitachi	HD14069	
	Motorola	MC14069	
	National	CD4069	
		MM54C04	
		MM74C04	
	OKI	MSM4069	
	RCA	CD4069	
	Sanyo	LC4069	
	SGS	HCF4069	
	Signetics	HEF4069	
	SSS	SCL4449	
	Solitron	CM4069	
	Toshiba	TC4069	
SCL4070	Fairchild	F4070	
	Hitachi	HD14070	
	Motorola	MC14070	
	National	CD4070	
		MM74C86	

(Continued)

Manufacturer Device	Replacement Source	Device	IC Master Page
SCL4070	RCA	CD4070	
	SGS	HCF4070	
	Signetics	HEF4070	
	Solitron	CM4070	
SCL4071	Fairchild	F4071	
	Hitachi	HD14071	
	Motorola	MC14071	
	National	CD4071	
		MM74C32	
	OKI	MSM4071	
	RCA	CD4071	
	Sanyo	LC4071	
	SGS	HCF4071	
	Signetics	HEF4071	
	Solitron	CM4071	
	Toshiba	TC4071	
SCL4072	Fairchild	F4072	
	Hitachi	HD14072	
	Motorola	MC14072	
	National	CD4072	
	RCA	CD4072	
	SGS	HCF4072	
	Signetics	HEF4072	
	Toshiba	TC4072	
SCL4073	Fairchild	F4073	
	Hitachi	HD14073	
	Motorola	MC14073	
	National	CD4073	
	RCA	CD4073	
	SGS	HCF4073	
	Signetics	HEF4073	
	Solitron	CM4073	
	Toshiba	TC4073	
SCL4075	Fairchild	F4075	
	Hitachi	HD14075	
	Motorola	MC14075	
	National	CD4075	
	RCA	CD4075	
	SGS	HCF4075	
	Signetics	HEF4075	
	Solitron	CM4075	
	Toshiba	TC4075	
SCL4076	Fairchild	F4076	
	Hitachi	HD14076	
	Motorola	MC14076	
	National	CD4076	
		MM54C173	
		MM74C173	
	RCA	CD4076	
	SGS	HCF4076	
	Signetics	HEF4076	
	Solitron	CM4076	
	Toshiba	TC4076	
SCL4077	Fairchild	F4077	
	Hitachi	HD14077	
	Motorola	MC14077	
	National	CD4077	
	RCA	CD4077	
	SGS	HCF4077	
	Signetics	HEF4077	
	Solitron	CM4077	
SCL4078	Fairchild	F4078	
	Hitachi	HD14078	
	Motorola	MC14078	
	RCA	CD4078	
	SGS	HCF4078	
	Signetics	HEF4078	
	Solitron	CM4078	
	Toshiba	TC4078	
SCL4081	Fairchild	F4081	
	Hitachi	HD14081	
	Motorola	MC14081	
	National	CD4081	
		MM74C08	
	OKI	MSM4081	
	RCA	CD4081	
	Sanyo	LC4081	
	SGS	HCF4081	
	Signetics	HEF4081	
	Solitron	CM4081	
	Toshiba	TC4081	
SCL4082	Fairchild	F4082	
	Hitachi	HD14082	
	Motorola	MC14082	
	National	CD4082	
	RCA	CD4082	
	SGS	HCF4082	
	Signetics	HEF4082	
	Toshiba	TC4082	
SCL4085	Fairchild	F4085	
	National	CD4085	
	RCA	CD4085	

(Continued)

◆ Discontinued

The manufacturers report their devices can be used as direct replacements.
Performance details often differ, so compare the specifications considering your requirements.

Solid State Scientific (Cont'd)

Manufacturer Device	Replacement Source	Device	IC Master Page
SCL4085	SGS	HCF4085	
	Signetics	HEF4085	
	Toshiba	TC4085	
SCL4086	Fairchild	F4086	
	RCA	CD4086	
	SGS	HCF4086	
	Signetics	HEF4086	
	Toshiba	TC4086	
SCL4093	Fairchild	F4093	
	Hitachi	HD14093	
	Motorola	MC14093	
	National	CD4093	
	OKI	MSM4093	
	RCA	CD4093	
	Sanyo	LC4093	
	SGS	HCF4093	
	Signetics	HEF4093	
	Toshiba	TC4093	
SCL4094	Hitachi	HD14094	
	Motorola	MC14094	
	RCA	CD4094	
	SGS	HCF4094	
	Toshiba	TC4094	
SCL4099	Hitachi	HD14099	
	Motorola	MC14099	
	National	CD4099	
	RCA	CD4099	
	SGS	HCF4099	
	Toshiba	TC4099	
SCL4160	Fairchild	F40160	
	Hitachi	HD14160	
	Motorola	MC14160	
	National	CD40160	
		MM54C160	
		MM74C160	
	RCA	CD40160	
	SGS	HCF40160	
	Toshiba	TC40160	
SCL4161	Fairchild	F40161	
	Hitachi	HD14161	
	Motorola	MC14161	
	National	CD40161	
		MM54C161	
		MM74C161	
	RCA	CD40161	
	SGS	HCF40161	
	Signetics	HEF40161	
	Toshiba	TC40161	
SCL4162	Fairchild	F40162	
	Hitachi	HD14162	
	Motorola	MC14162	
	National	CD40162	
		MM54C162	
		MM74C162	
	RCA	CD40162	
	SGS	HCF40162	
	Signetics	HEF40162	
	Toshiba	TC40162	
SCL4163	Fairchild	F40163	
	Hitachi	HD14163	
	Motorola	MC14163	
	National	CD40163	
		MM54C163	
		MM74C163	
	RCA	CD40163	
	SGS	HCF40163	
	Signetics	HEF40163	
	Toshiba	TC40163	
SCL4174	Fairchild	F40174	
	Hitachi	HD14174	
	Motorola	MC14174	
	National	CD40174	
		MM54C174	
		MM74C174	
	RCA	CD40174	
	SGS	HCF40174	
	Signetics	HEF40174	
	Toshiba	TC40174	
SCL4192	Fairchild	F4029	
	Motorola	MC14029	
	National	CD40192	
		CD4029	
	RCA	CD40192	
		CD4029	
	SGS	HCF40192	
		HCF4029	
	Signetics	HEF40192	
	SSS	SCL4029	
	Solitron	CM4029	

(Continued)

Manufacturer Device	Replacement Source	Device	IC Master Page
SCL4192	Toshiba	TC40192	
		TC4029	
SCL4193	Fairchild	F40193	
	National	CD40193	
		MM54C193	
		MM74C193	
	RCA	CD40193	
	SGS	HCF40193	
	Signetics	HEF40193	
	Toshiba	TC40193	
SCL4402	National	CD4048	
	RCA	CD4048	
	SGS	HCF4048	
	Solitron	CM4048	
SCL4445	Fairchild	F4521	
	Motorola	MC14521	
	RCA	CD4045	
	SGS	HCF4045	
	Signetics	HEF4521	
	Solitron	CM4045	
	Toshiba	TC4521	
SCL4449	Fairchild	F4069	
	Hitachi	HD14069	
	Motorola	MC14069	
	National	CD4069	
		MM54C04	
		MM74C04	
	OKI	MSM4069	
	RCA	CD4069	
	Sanyo	LC4069	
	SGS	HCF4069	
	Signetics	HEF4069	
	SSS	SCL4069	
	Solitron	CM4069	
	Toshiba	TC4069	
SCL4502	Hitachi	HD14502	
	Motorola	MC14502	
	RCA	CD4502	
	SGS	HCF4502	
	Signetics	HEF4502	
SCL4508	Hitachi	HD14508	
		HD74147	
	Motorola	MC14508	
	National	DM74147	
	RCA	CD4508	
	SGS	HCF4508	
	Signetics	**74147**	**861**
		HEF4508	
		N82147	
	Solitron	CM4508	
	TI	**SN74147**	**970**
	Toshiba	TC4508	
SCL4510	Fairchild	F4510	
	Hitachi	HD14510	
	Motorola	MC14510	
	National	CD4510	
	RCA	CD4510	
	SGS	HCF4510	
	Signetics	HEF4510	
	Solitron	CM4510	
	Toshiba	TC4510	
SCL4511	Fairchild	F4511	
	Hitachi	HD14511	
	Mitel	MD4511	
	MMI	4511	
	Motorola	MC14511	
	National	CD4511	
	NEC	μPD4511	
	RCA	CD4511	
	SGS	HCF4511	
	Signetics	HEF4511	
	Solitron	CM4511	
	Toshiba	TC4511	
SCL4512	Fairchild	F4512	
	Hitachi	HD14512	
	Motorola	MC14512	
	National	CD4512	
	RCA	CD4512	
	SGS	HCF4512	
	Toshiba	TC4512	
SCL4514	Fairchild	F4514	
	Hitachi	HD14514	
	Motorola	MC14514	
	National	CD4514	
	RCA	CD4514	
	SGS	HCF4514	
	Signetics	HEF4514	
	Solitron	CM4514	
	Toshiba	TC4514	
SCL4515	Fairchild	F4515	
	Hitachi	HD14515	
	Motorola	MC14515	

(Continued)

Manufacturer Device	Replacement Source	Device	IC Master Page
SCL4515	National	CD4515	
	RCA	CD4515	
	SGS	HCF4515	
	Signetics	HEF4515	
	Solitron	CM4515	
	Toshiba	TC4515	
SCL4516	Fairchild	F4516	
	Hitachi	HD14516	
	Motorola	MC14516	
	National	CD4516	
	RCA	CD4516	
	SGS	HCF4516	
	Signetics	HEF4516	
	Solitron	CM4516	
	Toshiba	TC4516	
SCL4517	Hitachi	HD14517	
	Motorola	MC14517	
	RCA	CD4517	
	Signetics	HEF4517	
SCL4518	Fairchild	F4518	
	Hitachi	HD14518	
	Motorola	MC14518	
	National	CD4518	
	RCA	CD4518	
	SGS	HCF4518	
	Signetics	HEF4518	
	Solitron	CM4518	
	Toshiba	TC4518	
SCL4520	Fairchild	F4520	
	Hitachi	HD14520	
	Motorola	MC14520	
	National	CD4520	
	OKI	MSM4520	
	RCA	CD4520	
	Sanyo	LC4520	
	SGS	HCF4520	
	Signetics	HEF4520	
	Solitron	CM4520	
	Toshiba	TC4520	
SCL4522	Fairchild	F4522	
	Hitachi	HD14522	
	Motorola	MC14522	
	National	CD4522	
	RCA	CD4522	
	Signetics	HEF4522	
	Toshiba	TC4522	
SCL4526	Fairchild	F4526	
	Hitachi	HD14526	
	Motorola	MC14526	
	National	CD4526	
	Signetics	HEF4526	
	Toshiba	TC4526	
SCL4527	Fairchild	F4527	
	Hitachi	HD14527	
	Motorola	MC14527	
	National	CD4527	
	RCA	CD4527	
	SGS	HCF4527	
	Signetics	HEF4527	
	Toshiba	TC4527	
		TR4527	
SCL4528	Fairchild	F4528	
	Hitachi	HD14528	
	Motorola	MC14528	
	National	CD4528	
		MM74C221	
	RCA	CD4098	
	SGS	HCF4098	
	Signetics	HEF4528	
	Toshiba	TC4528	
SCL4531	Fairchild	F4531	
	Hitachi	HD14531	
	Motorola	MC14531	
	RCA	CD40101	
	SGS	HCF40101	
	Signetics	HEF4531	
	Toshiba	TC4531	
SCL4532	Fairchild	F4532	
	Hitachi	HD14532	
	Motorola	MC14532	
	RCA	CD4532	
	SGS	HCF4532	
	Signetics	HEF4532	
	Toshiba	TC4532	
SCL4555	Fairchild	F4555	
	Hitachi	HD14555	
	Motorola	MC14555	
	RCA	CD4555	
	SGS	HCF4555	
	Signetics	HEF4555	
	Toshiba	TC4555	

Manufacturer Device	Replacement Source	Device	IC Master Page
SCL4556	Fairchild	F4556	
	Motorola	MC14556	
	RCA	CD4556	
	SGS	HCF4556	
	Signetics	HEF4556	
	Toshiba	TC4556	
SCL4581	Hitachi	HD14581	
	Motorola	MC14581	
	RCA	CD40181	
		CD4057	
	SGS	HCF40181	
SCL4582	Fairchild	F4582	
	Hitachi	HD14582	
	Motorola	MC14582	
	RCA	CD40182	
	SGS	HCF40182	
SCL4584	Fairchild	F40014	
	Hitachi	HD14584	
	Motorola	MC14584	
	National	CD40106	
		CD4584	
		MM54C14	
		MM74C14	
	RCA	CD40106	
	SGS	HCF40106	
	Signetics	**HEF40106**	**865**
SCL4585	Fairchild	F40085	
	Hitachi	HD14585	
	Motorola	MC14585	
	National	MM74C85	
	RCA	CD4585	
	Signetics	HEF4585	
	Toshiba	TC4585	
SCL4XXX	Fairchild	34XXX	
		F4XXX	
	Hitachi	HD14XXX	
	Motorola	MC14XXX	
	National	CD4XXX	
	OKI	MSM4XXX	
	RCA	CD4XXX	
	SGS	HCF4XXX	
	Solitron	CM4XXX	
	TI	TP4000 series	
	Toshiba	TC4XXX	
SCM21C02	AMI	S6508	
	Fairchild	4736B	
	Harris	**HM6508**	**3965**
	Intel	2125A	
	Motorola	MCM2125	
	National	MM74C929	
		NMC6508	
	NEC	μPD443	
	Toshiba	TC5508	
SCM21C14	AMD	AM9114	
	EMM-SESCO	2114	
	Fairchild	F2114	
	Hitachi	HM472114	
	Intel	2114	
		2114A	
	Intersil	IM2114	
	MicroPwr	MP2114	
	Motorola	MCM2114	
	National	MM2114	
	NEC	μPD2114	
	OKI	**MSM2114**	**4118**
	Panasonic	MN2114	
	SMOS	SRM2114	
	Synertek	**SY2114**	**4210**
	TI	TMS4045	
	Toshiba	TMM314	
		TMM314A	
SCM23C128	**RCA**	**CDM53128**	**1593**
SCM23C256	**RCA**	**CDM53256**	**1593**
	Toshiba	TMM23256	
SCM23C32	AMD	AM9232	
	AMI	S68322	
		S68A332	
	Fairchild	F3532	
	GI	R094132	
		T094132	
	GTEMicro	2332	
	Hitachi	HN46332	
	Intersil	IM7332	
	Motorola	MC68332	
		MCM68332	
		MCM68A332	**4048**
	National	MM52132	
	NCR	2332	
		NCR2332	
	NEC	**μPD2332**	**4100**
	OKI	**MSM2932**	**4118**
	RCA	**CDM5333**	**1593**

(Continued)

◆ Discontinued

Bold face device numbers indicate manufacturers data is provided in the IC Master on the pages noted.

Solid State Scientific (Cont'd)

Manufacturer Device	Replacement Source	Device	IC Master Page
SCM23C32	Rockwell	R2332	
	SiliconG	SG3532	
	SMC	ROM4732	
	Synertek	**SY2332**	**4211**
	TI	**TMS4732**	**4226**
	Toshiba	TM2332	
		TMM333	
	Universal	UM2332	
	VTI	**VT2332**	**4249**
SCM23C33	AMD	AM9233	
	AMI	**S2333**	**3932**
	Fairchild	F3533	
	GI	R09433	
	Intel	2332	
	NCR	2333	
		NCR2333	
	RCA	**CDM5332**	**1593**
	Signetics	2332	
	Synertek	**SY2333**	**4211**
	Universal	UM2333-45	
	VTI	**VT2333**	**4249**
SCM23C64	AMI	S68364	
	GI	R09464	
	GTEMicro	G5364	
	Intersil	IM7364	
	MicroPwr	MP2364	
	Mitsubishi	M5L2364	
	Mostek	MK36000	
	Motorola	**MCM68364**	**4048,4054**
	National	MM5235	
	NCR	NCR2364	
	RCA	**CDM5364**	**1593**
	SMOS	SMM2364	
	SGS	M36000	
	Signetics	2664A	
	SSS	SCM23C65	
	SMC	ROM36000	
	Synertek	**SY2364**	**4211**
	TI	**TMS4764**	**4225**
	Toshiba	TM2364	
	VTI	**VT2364**	**4250**
SCM23C65	AMI	S68364	
	GI	R09464	
	GTEMicro	G5364	
	Intersil	IM7364	
	MicroPwr	MP2364	
	Mitsubishi	M5L2364	
	Mostek	MK36000	
	Motorola	**MCM68364**	**4048,4054**
	National	MM5235	
	NCR	NCR2364	
	RCA	**CDM5364**	**1593**
	SMOS	SMM2364	
	SGS	M36000	
	Signetics	2664A	
	SSS	SCM23C64	
	SMC	ROM36000	
	Synertek	**SY2364**	**4211**
	TI	**TMS4764**	**4225**
	Toshiba	TM2364	
	VTI	**VT2364**	**4250**
SCM5101	AMI	S5101	
	Intel	5101	
SND5025	AMI	S6852	
	Fairchild	**F6852**	**1464**
	Hitachi	HD6852	
		HD68A52	
	Motorola	**MC2652**	**1511**
		MC6852	**1505**
		MC68652	**1506,1511**
	SMC	COM5025	
	Thomson-CSF	EF6852	
SND5027	SMC	CRT5027	
	TI	TMS9927	
SND5037	SMC	CRT5037	
SND8002	SMC	CRT8002	

Solitron Devices

Manufacturer Device	Replacement Source	Device	IC Master Page
CM4000	Motorola	MC14000	
	National	CD4000	
	RCA	CD4000	
	SGS	HCF4000	
	Signetics	HEF400	
	SSS	SCL4000	
CM4001	Fairchild	F4001	
	Hitachi	HD14001	
	Motorola	MC14001	
	National	CD4001	
		MM74C02	
	OKI	MSM4001	
	RCA	CD4001	
	Sanyo	LC4001B	
	SGS	HCF4001	
	Signetics	HEF4001	
	SSS	SCL4001	
	Toshiba	TC4001	
CM4002	Fairchild	F4002	
	Hitachi	HD14002	
	Motorola	MC14002	
	National	CD4002	
	RCA	CD4002	
	SGS	HCF4002	
	Signetics	HEF4002	
	SSS	SCL4002	
	Toshiba	TC4002	
CM4006	Fairchild	F4006	
	Hitachi	HD14006	
	National	CD4006	
	SGS	HCF4006	
	Signetics	HEF4006	
	SSS	SCL4006	
	Toshiba	TC4006	
CM4007	Fairchild	F4007	
	Hitachi	HD14007	
	Motorola	MC14007	
	National	CD4007	
	RCA	CD4007	
	SGS	HCF4007	
	Signetics	HEF4007	
	SSS	SCL4007	
	Toshiba	TC4007	
CM4008	Fairchild	F4008	
	Hitachi	HD14008	
	Motorola	MC14008	
	National	CD4008	
		MM74C83	
	RCA	CD4008	
	SGS	HCF4008	
	Signetics	HEF4008	
	SSS	SCL4008	
	Toshiba	TC4008	
CM4009	Hitachi	HD14009	
	National	CD4009	
	RCA	CD4049	
	SGS	HCF4009	
	SSS	SCL4009	
	Toshiba	TC4009	
CM4010	Hitachi	HD14010	
	National	CD4010	
	RCA	CD4010	
	SGS	HCF4010	
	SSS	SCL4010	
	Toshiba	TC4010	
CM4011	Fairchild	F4011	
	Hitachi	HD14011	
	Motorola	MC14011	
	National	CD4011	
		MM74C00	
	OKI	MSM4011	
	RCA	CD4011	
	Sanyo	LC4011	
	SGS	HCF4011	
	Signetics	HEF4011	
	SSS	SCL4011	
	Toshiba	TC4011	
CM4012	Fairchild	F4012	
	Hitachi	HD14012	
	Motorola	MC14012	
	National	CD4012	
	RCA	CD4012	
	SGS	HCF4012	
	Signetics	HEF4012	
	SSS	SCL4012	
	Toshiba	TC4012	
CM4013	Fairchild	F4013	
	Hitachi	HD14013	
	Motorola	MC14013	
	National	CD4013	
		MM74C74	
	OKI	MSM4013	
	RCA	CD4013	
	Sanyo	LC4013	
	SGS	HCF4013	
	Signetics	HEF4013	
	SSS	SCL4013	
	Toshiba	TC4013	
CM4014	Fairchild	F4014	
	Hitachi	HD14014	
	Motorola	MC14014	
	National	CD4014	
	RCA	CD4014	
	SGS	HCF4014	
	Signetics	HEF4014	
	SSS	SCL4014	
	Toshiba	TC4014	
CM4015	Fairchild	F4015	
	Hitachi	HD14015	
	Motorola	MC14015	
	National	CD4015	
		MM74C164	
	OKI	MSM4015	
	RCA	CD4015	
	Sanyo	LC4015	
	SGS	HCF4015	
	Signetics	HEF4015	
	SSS	SCL4015	
	Toshiba	TC4015	
CM4016	Fairchild	F4016	
		F4066	
	Hitachi	HD14016	
		HD14066	
	Motorola	MC14016	
		MC14066	
	National	CD4016	
		CD4066	
	RCA	CD4016	
		CD4066	
	Sanyo	LC4016	
		LC4066	
	SGS	HCF4016	
		HCF4066	
	Signetics	**HEF4016**	**864**
		HEF4066	
	SSS	SCL4016	
		SCL4066	
	Solitron	CM4066	
		HCF4016	
	Toshiba	TC4016	
		TC4066	
CM4017	Fairchild	F4017	
	Hitachi	HD14017	
	Motorola	MC14017	
	National	CD4017	
	RCA	CD4017	
	SGS	HCF4017	
	Signetics	HEF4017	
	SSS	SCL4017	
	Toshiba	TC4017	
CM4018	Fairchild	F4018	
	Hitachi	HD14018	
	Motorola	MC14018	
	National	CD4018	
	RCA	CD4018	
	SGS	HCF4018	
	Signetics	HEF4018	
	SSS	SCL4018	
	Toshiba	TC4018	
CM4019	Fairchild	F4019	
	National	CD4019	
	OKI	MSM4019	
	RCA	CD4019	
	Sanyo	LC4019	
	SGS	HCF4019	
	Signetics	HEF4019	
	SSS	SCL4019	
	Toshiba	TC4019	
CM4020	Fairchild	F4020	
	Hitachi	HD14020	
	Motorola	MC14020	
	National	CD4020	
	RCA	CD4020	
	SGS	HCF4020	
	Signetics	HEF4020	
	SSS	SCL4020	
	Toshiba	TC4020	
CM4022	Fairchild	F4022	
	Hitachi	HD14022	
	Motorola	MC14022	
	National	CD4022	
	RCA	CD4022	
	SGS	HCF4022	
	Signetics	HEF4022	
	SSS	SCL4022	
	Toshiba	TC4022	
CM4023	Fairchild	F4023	
	Hitachi	HD14023	
	Motorola	MC14023	
	National	CD4023	
CM4023	National	MM74C10	
	RCA	CD4023	
	SGS	HCF4023	
	Signetics	HEF4023	
	SSS	SCL4023	
	Toshiba	TC4023	
CM4024	Fairchild	F4024	
	Hitachi	HD14024	
	Motorola	MC14024	
	National	CD4024	
	RCA	CD4024	
	SGS	HCF4024	
	Signetics	HEF4024	
	SSS	SCL4024	
	Toshiba	TC4024	
CM4025	Fairchild	F4025	
	Hitachi	HD14025	
	Motorola	MC14025	
	National	CD4025	
	RCA	CD4025	
	SGS	HCF4025	
	Signetics	HEF4025	
	SSS	SCL4025	
	Toshiba	TC4025	
CM4026	RCA	CD4026	
	SGS	HCF4026	
	SSS	SCL4026	
CM4027	Fairchild	F4027	
	Hitachi	HD14027	
	Motorola	MC14027	
	National	CD4027	
		MM74C76	
	OKI	MSM4027	
	RCA	CD4027	
	Sanyo	LC4027	
	SGS	HCF4027	
	Signetics	HEF4027	
	SSS	SCL4027	
CM4028	Fairchild	F4028	
	Hitachi	HD14028	
	Motorola	MC14028	
	National	CD4028	
		MM74C42	
	OKI	MSM4028	
	Sanyo	LC4028	
	SGS	HCF4028	
	Signetics	HEF4028	
	SSS	SCL4028	
	Toshiba	TC4028	
CM4029	Fairchild	F4029	
	Motorola	MC14029	
	National	CD40192	
		CD4029	
	RCA	CD40192	
		CD4029	
	SGS	HCF40192	
		HCF4029	
	Signetics	HEF40192	
	SSS	SCL4029	
		SCL4192	
	Toshiba	TC40192	
		TC4029	
CM4030	Fairchild	F4030	
	National	CD4030	
	RCA	CD4030	
	SGS	HCF4030	
	Signetics	HEF4030	
	SSS	SCL4030	
	Toshiba	TC4030	
CM4032	Hitachi	HD14032	
	Motorola	MC14032	
	RCA	CD4032	
	SGS	HCF4032	
	Toshiba	TC4032	
CM4033	RCA	CD4033	
	SGS	HCF4033	
	SSS	SCL4033	
CM4034	Fairchild	F4034	
	Hitachi	HD14034	
	Motorola	MC14034	
	National	CD4034	
	RCA	CD4034	
	SGS	HCF4034	
	SSS	SCL4034	
	Toshiba	TC4034	
CM4035	Fairchild	F4035	
	Hitachi	HD14035	
	Motorola	MC14035	
	RCA	CD4035	
	SGS	HCF4035	
	Signetics	HEF4035	
	Toshiba	TC4035	

(Continued)

◆ Discontinued

The manufacturers report their devices can be used as direct replacements.
Performance details often differ, so compare the specifications considering your requirements.

Solitron Devices (Cont'd)

Manufacturer Device	Replacement Source	Device	IC Master Page
CM4036	RCA	CD4036	
	Toshiba	TC4036	
CM4037	RCA	CD4037	
CM4038	Hitachi	HD14038	
	Motorola	MC14038	
	RCA	CD4038	
	SGS	HCF4038	
	Toshiba	TC4038	
CM4039	RCA	CD4039	
	Toshiba	TC4039	
CM4040	Fairchild	F4040	
	Hitachi	HD14040	
	Motorola	MC14040	
	National	CD4040	
	RCA	CD4040	
	SGS	HCF4040	
	Signetics	HEF4040	
	SSS	SCL4040	
	Toshiba	TC4040	
CM4041	Fairchild	F4041	
	National	CD4041	
	RCA	CD4041	
	SGS	HCF4041	
	Signetics	HEF4041	
	SSS	SCL4041	
CM4042	Fairchild	F4042	
	Hitachi	HD14042	
	Motorola	MC14042	
	National	CD4042	
	RCA	CD4042	
	SGS	HCF4042	
	Signetics	HEF4042	
	SSS	SCL4042	
	Toshiba	TC4042	
CM4043	Hitachi	HD14043	
	Motorola	MC14043	
	National	CD4043	
	RCA	CD4043	
	SGS	HCF4043	
	Signetics	HEF4043	
	SSS	SCL4043	
	Toshiba	TC4043	
CM4044	Fairchild	F4044	
	Hitachi	HD14044	
	Motorola	MC14044	
	National	CD4044	
	RCA	CD4044	
	SGS	HCF4044	
	Signetics	HEF4044	
	Toshiba	TC4044	
CM4045	Fairchild	F4521	
	Motorola	MC14521	
	RCA	CD4045	
	SGS	HCF4045	
	Signetics	HEF4521	
	SSS	SCL4445	
	Toshiba	TC4521	
CM4046	Fairchild	F4046	
	Hitachi	HD14046	
	Motorola	MC14046	
	National	CD4046	
	RCA	CD4046	
	SGS	HCF4046	
	SSS	SCL4046	
CM4047	Fairchild	F4047	
	National	CD4047	
	RCA	CD4047	
	SGS	HCF4047	
	Signetics	HEF4047	
	SSS	SCL4047	
	Toshiba	TC4047	
CM4048	National	CD4048	
	RCA	CD4048	
	SGS	HCF4048	
	SSS	SCL4402	
CM4049	Fairchild	F4049	
	Hitachi	HD14049	
	Motorola	MC14049	
	National	CD4049	
	OKI	MSM4049	
	RCA	CD4049	
	Sanyo	LC4049	
	SGS	HCF4049	
	Signetics	HEF4049	
	SSS	SCL4049	
	Toshiba	TC4049	
CM4050	Fairchild	F4050	
	Hitachi	HD14050	
	Motorola	MC14050	
	National	CD4050	
		(Continued)	

Manufacturer Device	Replacement Source	Device	IC Master Page
CM4050	RCA	CD4050	
	SGS	HCF4050	
	Signetics	HEF4050	
	SSS	SCL4050	
	Toshiba	TC4050	
CM4051	Fairchild	F4051	
	Hitachi	HD14051	
	Motorola	MC14051	
	National	CD4051	
	RCA	CD4051	
	SGS	HCF4051	
	Signetics	HEF4051	
	SSS	SCL4051	
	Toshiba	TC4051	
CM4052	AD	AD7502	
	Hitachi	HD14052	
	MicroPwr	MP7502	
	National	CD4052	
	SSS	SCL4052	
	Toshiba	TC4052	
CM4053	Fairchild	F4053	
	Hitachi	HD14053	
	Motorola	MC14053	
	National	CD4053	
	RCA	CD4053	
	SGS	HCF4053	
	Signetics	HEF4053	
	SSS	SCL4053	
	Toshiba	TC4053B	
CM4066	Fairchild	F4016	
		F4066	
	Hitachi	HD14016	
		HD14066	
	Motorola	MC14016	
		MC14066	
	National	CD4016	
		CD4066	
	RCA	CD4016	
		CD4066	
	Sanyo	LC4016	
		LC4066	
	SGS	HCF4016	
		HCF4066	
	Signetics	**HEF4016**	**864**
		HEF4066	
	SSS	SCL4016	
		SCL4066	
	Solitron	CM4016	
		HCF4016	
	Toshiba	TC4016	
		TC4066	
CM4068	Fairchild	F4068	
	Hitachi	HD14068	
	Motorola	MC14068	
	RCA	CD4068	
	SGS	HCF4068	
	Signetics	HEF4068	
	SSS	SCL4068	
	Toshiba	TC4068	
CM4069	Fairchild	F4069	
	Hitachi	HD14069	
	Motorola	MC14069	
	National	CD4069	
		MM54C04	
		MM74C04	
	OKI	MSM4069	
	RCA	CD4069	
	Sanyo	LC4069	
	SGS	HCF4069	
	Signetics	HEF4069	
	SSS	SCL4069	
		SCL4449	
	Toshiba	TC4069	
CM4070	Fairchild	F4070	
	Hitachi	HD14070	
	Motorola	MC14070	
	National	CD4070	
		MM74C86	
	RCA	CD4070	
	SGS	HCF4070	
	Signetics	HEF4070	
	SSS	SCL4070	
CM4071	Fairchild	F4071	
	Hitachi	HD14071	
	Motorola	MC14071	
	National	CD4071	
		MM74C32	
	OKI	MSM4071	
	RCA	CD4071	
	Sanyo	LC4071	
	SGS	HCF4071	
	Signetics	HEF4071	
		(Continued)	

Manufacturer Device	Replacement Source	Device	IC Master Page
CM4071	SSS	SCL4071	
	Toshiba	TC4071	
CM4073	Fairchild	F4073	
	Hitachi	HD14073	
	Motorola	MC14073	
	National	CD4073	
	RCA	CD4073	
	SGS	HCF4073	
	Signetics	HEF4073	
	SSS	SCL4073	
	Toshiba	TC4073	
CM4075	Fairchild	F4075	
	Hitachi	HD14075	
	Motorola	MC14075	
	National	CD4075	
	RCA	CD4075	
	SGS	HCF4075	
	Signetics	HEF4075	
	SSS	SCL4075	
	Toshiba	TC4075	
CM4076	Fairchild	F4076	
	Hitachi	HD14076	
	Motorola	MC14076	
	National	CD4076	
		MM54C173	
		MM74C173	
	RCA	CD4076	
	SGS	HCF4076	
	Signetics	HEF4076	
	SSS	SCL4076	
	Toshiba	TC4076	
CM4077	Fairchild	F4077	
	Hitachi	HD14077	
	Motorola	MC14077	
	National	CD4077	
	RCA	CD4077	
	SGS	HCF4077	
	Signetics	HEF4077	
	SSS	SCL4077	
CM4078	Fairchild	F4078	
	Hitachi	HD14078	
	Motorola	MC14078	
	RCA	CD4078	
	SGS	HCF4078	
	Signetics	HEF4078	
	SSS	SCL4078	
	Toshiba	TC4078	
CM4081	Fairchild	F4081	
	Hitachi	HD14081	
	Motorola	MC14081	
	National	CD4081	
		MM74C08	
	OKI	MSM4081	
	RCA	CD4081	
	Sanyo	LC4081	
	SGS	HCF4081	
	Signetics	HEF4081	
	SSS	SCL4081	
	Toshiba	TC4081	
CM4508	Hitachi	HD14508	
		HD74147	
	Motorola	MC14508	
	National	DM74147	
	RCA	CD4508	
	SGS	HCF4508	
	Signetics	**74147**	**861**
		HEF4508	
		N82147	
	SSS	SCL4508	
	TI	**SN74147**	**970**
	Toshiba	TC4508	
CM4510	Fairchild	F4510	
	Hitachi	HD14510	
	Motorola	MC14510	
	National	CD4510	
	RCA	CD4510	
	SGS	HCF4510	
	Signetics	HEF4510	
	SSS	SCL4510	
	Toshiba	TC4510	
CM4511	Fairchild	F4511	
	Hitachi	HD14511	
	Mitel	MD4511	
	MMI	4511	
	Motorola	MC14511	
	National	CD4511	
	NEC	μPD4511	
	RCA	CD4511	
	SGS	HCF4511	
	Signetics	HEF4511	
	SSS	SCL4511	
	Toshiba	TC4511	

Manufacturer Device	Replacement Source	Device	IC Master Page
CM4514	Fairchild	F4514	
	Hitachi	HD14514	
	Motorola	MC14514	
	National	CD4514	
	RCA	CD4514	
	SGS	HCF4514	
	Signetics	HEF4514	
	SSS	SCL4514	
	Toshiba	TC4514	
CM4515	Fairchild	F4515	
	Hitachi	HD14515	
	Motorola	MC14515	
	National	CD4515	
	RCA	CD4515	
	SGS	HCF4515	
	Signetics	HEF4515	
	SSS	SCL4515	
	Toshiba	TC4515	
CM4516	Fairchild	F4516	
	Hitachi	HD14516	
	Motorola	MC14516	
	National	CD4516	
	RCA	CD4516	
	SGS	HCF4516	
	Signetics	HEF4516	
	SSS	SCL4516	
	Toshiba	TC4516	
CM4518	Fairchild	F4518	
	Hitachi	HD14518	
	Motorola	MC14518	
	National	CD4518	
	RCA	CD4518	
	SGS	HCF4518	
	Signetics	HEF4518	
	SSS	SCL4518	
	Toshiba	TC4518	
CM4520	Fairchild	F4520	
	Hitachi	HD14520	
	Motorola	MC14520	
	National	CD4520	
	OKI	MSM4520	
	RCA	CD4520	
	Sanyo	LC4520	
	SGS	HCF4520	
	Signetics	HEF4520	
	SSS	SCL4520	
	Toshiba	TC4520	
CM4XXX	Fairchild	34XXX	
		F4XXX	
	Hitachi	HD14XXX	
	Motorola	MC14XXX	
	National	CD4XXX	
	OKI	MSM4XXX	
	RCA	CD4XXX	
	SGS	HCF4XXX	
	SSS	SCL4XXX	
	TI	TP4000 series	
	Toshiba	TC4XXX	
HCF4016	Fairchild	F4016	
		F4066	
	Hitachi	HD14016	
		HD14066	
	Motorola	MC14016	
		MC14066	
	National	CD4016	
		CD4066	
	RCA	CD4016	
		CD4066	
	Sanyo	LC4016	
		LC4066	
	SGS	HCF4016	
		HCF4066	
	Signetics	**HEF4016**	**864**
		HEF4066	
	SSS	SCL4016	
		SCL4066	
	Solitron	CM4016	
		CM4066	
	Toshiba	TC4016	
		TC4066	
UC4250	Fairchild	μA776	
	Harris	**HA-2720**	**3416**
	Intersil	ICL8021	
		LM4250	
	Motorola	MC1776	
	National	LM4250	
	SiliconG	SG4250	
μA2556	Intel	1101	
	Solitron	μA2656	
		μA3556	
		μA3656	

◆ Discontinued

Bold face device numbers indicate manufacturers data is provided in the IC Master on the pages noted.

© IC MASTER 1984

Solitron Devices (Cont'd)

Manufacturer Device	Replacement Source	Device	IC Master Page
μA2656	Intel	1101	
	Solitron	μA2556	
		μA3556	
		μA3656	
μA3556	Intel	1101	
	Solitron	μA2556	
		μA2656	
		μA3656	
μA3656	Intel	1101	
	Solitron	μA2556	
		μA2656	
		μA3556	

Sprague Electric Company

Manufacturer Device	Replacement Source	Device	IC Master Page
UCN-4810	**AMI**	**S4534**	**2811**
	Sprague	UCN-4810A	
	TI	UCN4810	
UCN-4810A	**AMI**	**S4534**	**2811**
	Sprague	UCN-4810	
	TI	UCN4810	
UCN-5818	SMI	S4535	
	TI	SN75518	
UDN-2541	TI	SN75437	
UDN-2580	Motorola	MC1417	
UDN-2841	SiliconG	SG2841	
	TI	UDN2841	
◆UDN-2842	TI	UDN2842	
◆UDN-2843	TI	UDN2843	
◆UDN-2844	TI	UDN2844	
UDN-2845	TI	UDN2845	
◆UDN-2846	TI	UDN2846	
UDN-2935	SiliconG	SG3635	
UDN-2950	TI	SN75605	
UDN-2981	Mitel	M54563	
UDN-2982	Mitel	M54562	
UDN-3611	National	DS3611	
		LM3611	
	TI	SN75471	
UDN-3612	National	DS3612	
		DS3632	
		LM3612	
	TI	SN75472	
UDN-3613	National	DS3613	
		LM3613	
	TI	SN75473	
UDN-3614	National	DS3614	
		LM3614	
	TI	SN75474	
UDN-5711	Motorola	MC1471	
	TI	SN75476	
		UDN5711	
UDN-5712	**Motorola**	**MC1472**	**3064**
	Sprague	UDN-5722	
	TI	SN75475	
		SN75477	
		UDN5712	
UDN-5713	Motorola	MC1473	
	TI	SN75478	
		UDN5713	
UDN-5714	Motorola	MC1474	
	TI	SN75479	
		UDN5714	
UDN-5722	**Motorola**	**MC1472**	**3064**
	Sprague	UDN-5712	
	TI	SN75475	
		SN75477	
		UDN5712	
UDN-6118	**Exar**	**XR6118**	**3376**
	Sanyo	LB1290	
	SiliconG	SG6118	
UDN-6126	Sanyo	LB1293	
UDN-6128	**Exar**	**XR6128**	**3376**
UDN-6184	Dionics	DI512	
	Sprague	UDN-6514	
UDN-6510	Dionics	DI510	
UDN-6514	Dionics	DI512	
	Sprague	UDN-6184	
ULN-2001	Exar	XR2001	
		XR2201	
	Fairchild	9665	
	Motorola	**MC1411**	**3064**
		ULN2001	
		XR2201	
	NEC	μPA2001	
	RIFA	PBD352301	
	Sanyo	LB1231	
	SGS	L201	
	SiliconG	SG2001	
	Sprague	ULN-2021	

(Continued)

Manufacturer Device	Replacement Source	Device	IC Master Page
ULN-2001	Sprague	ULQ-2002	
		ULS-2001	
	TI	ULN2001	
	Toshiba	TD62001	
ULN-2002	Exar	XR2002	
		XR2202	
	Fairchild	9666	
		MC1412	
	Motorola	**MC1412**	**3064**
		ULN2002	
	NEC	μPA2002	
	RIFA	PBD352304	
	Sanyo	LB1232	
	SGS	L202	
	Signetics	NE5602	
	Sprague	ULQ-2003	
	TI	ULN2002	
	Toshiba	TD62002	
ULN-2003	Exar	XR2003	
		XR2004	
		XR2203	
	Fairchild	9667	
		MC1413	
	Mitsubishi	M54523	
	Motorola	**MC1413**	**3064**
		ULN2003	
	Sanyo	LB1233	
	SGS	L203	
	Signetics	NE5603	
		ULN2003	
	SiliconG	SG2003	
	Sprague	ULQ-2003	
		ULQ-2004	
		ULS-2003	
		ULS-2004	
	TI	ULN2003	
	Toshiba	TD62003	
ULN-2004	Exar	XR2204	
	Fairchild	9668	
	Mitsubishi	M54526	
	Motorola	**MC1416**	**3064**
		ULN2004	
	Sanyo	LB1234	
	SGS	L204	
	Signetics	NE5604	
		ULN2004	
	SiliconG	SG2004	
	Sprague	ULS2004	
	TI	ULN2004	
	Toshiba	TD62004	
ULN-2005	Exar	XR2205	
	TI	ULN2005	
ULN-2011	Exar	XR2011	
	SiliconG	SG3851	
ULN-2012	Exar	XR2012	
	SiliconG	SG3852	
	Sprague	ULS-2012	
ULN-2013	Exar	XR2013	
ULN-2014	Exar	XR2014	
	SiliconG	SG3853	
	Sprague	ULS-2013	
ULN-2021	Exar	XR2001	
		XR2201	
	Fairchild	9665	
	Motorola	**MC1411**	**3064**
		ULN2001	
		XR2201	
	NEC	μPA2001	
	RIFA	PBD352301	
	Sanyo	LB1231	
	SGS	L201	
	SiliconG	SG2001	
	Sprague	ULN-2001	
		ULQ-2002	
		ULS-2001	
	TI	ULN2001	
	Toshiba	TD62001	
ULN-2022	RIFA	PBD352314	
	SiliconG	SG2002	
	Sprague	ULS-2002	
	TI	SN75467	
ULN-2023	RIFA	PBD352313	
	TI	SN75468	
ULN-2024	RIFA	PBD352312	
	TI	SN75469	
ULN-2046	Fairchild	μA3046	
	Motorola	MC3346	
	National	LM3046	
	Plessey	SL3046	
		SL3146	
	RCA	**CA3046**	**3601**
		CA3146	**3601**

(Continued)

Manufacturer Device	Replacement Source	Device	IC Master Page
ULN-2046	Sanyo	LA3046	
	SiliconG	SG3046	
		SG3146	
		SG3821	
ULN-2054	Fairchild	μA3054	
	Motorola	CA3054	
	National	LM3054	
	RCA	CA3054	
	SiliconG	SG3822	
	Thomson-CSF		
		SFC2054	
ULN-2064	Mitsubishi	ULN-2064	
	TI	SN75064	
		ULN2064	
	Toshiba	TD62064	
ULN-2065	TI	SN75065	
		ULN2065	
ULN-2066	TI	SN75066	
		ULN2066	
ULN-2067	TI	SN75067	
		ULN2067	
ULN-2068	Motorola	ULN2068	
	TI	SN75068	
		ULN2068	
ULN-2069	TI	SN75069	
		ULN2069	
ULN-2074	Motorola	ULN2074	
	TI	SN75074	
		ULN2074	
	Toshiba	TD62074	
ULN-2075	TI	SN75075	
		ULN2075	
ULN-2081	Plessey	SL3081	
	RCA	**CA3081**	**3601**
	Signetics	CA3081	
	SiliconG	SG3081	
ULN-2082	Plessey	SL3082	
	RCA	**CA3082**	**3601**
	SiliconG	SG3082	
ULN-2083	Plessey	SL3083	
		SL3183	
	RCA	CA3083	
		CA3183	**3601**
	SiliconG	SG3083	
		SG3183	
ULN-2086	Fairchild	μA3086	
	Motorola	MC3386	
	National	LM3086	
	Plessey	SL3086	
	RCA	**CA3086**	**3601**
	Sanyo	LA3086	
	SiliconG	SG3086	
		SG3886	
ULN-2111	Motorola	MC1357	
	National	LM2111	
	RCA	CA2111	
	Signetics	N5111	
	TI	SN76642	
		SN76643	
◆ULN-2136	Fairchild	ULN-2136	
		μA2136	
	Motorola	MC1356	
	RCA	CA2136	
	TI	SN76669	
ULN-2204	Hitachi	HA12402	
	Telefunken	TDA1083	
	Toshiba	TA7613	
ULN-2242	Motorola	TDA1090	
ULN-2249	Hitachi	HA1199	
◆ULN-2261	RCA	CA3135	
ULN-2270	Fairchild	μA7327	
	SGS	TDA1170	
ULN-2280	National	LM380	
ULN-2290	Fairchild	TDA1194	
	Hitachi	HA1364	
	RCA	CA1190	
	SGS	TDA1190	
		TDA1190Z	
		TDA3190	
ULN-2429	Cherry	CS166	
ULN-2801	RIFA	PBD353801	
ULN-2802	RIFA	PBD353804	
ULN-2803	RIFA	PBD353803	
ULN-2804	RIFA	PBD353802	
ULN-2821	SGS	L601	
ULN-2822	SGS	L602	
ULN-2823	SGS	L603	
ULN-2824	SGS	L604	
◆ULN-3304	Cherry	CS102	
◆ULN-3306	Cherry	CS122	
ULN-3701	Fairchild	TDA2002	
	National	LM2002	

(Continued)

Manufacturer Device	Replacement Source	Device	IC Master Page
ULN-3701	National	LM383	
	RCA	CA2002	
	SGS	TBA2002	
	Sprague	ULN-3702	
ULN-3702	Fairchild	TDA2002	
	National	LM2002	
		LM383	
	RCA	CA2002	
	SGS	TBA2002	
	Sprague	ULN-3701	
ULN-3703	Fairchild	TDA2003	
	SGS	TDA2003	
ULN-3809	Motorola	MC1309	
ULN-3810	Exar	XR1310	
	Hitachi	HA1156	
	National	LM1310	
	RCA	CA1310	
	Sanyo	LA3301	
		LA3350	
	TI	SN76115	
	Toshiba	TA7157	
ULN-3889	SGS	TCA3189	
ULN-8124	**Exar**	**XR3524**	**3381**
	RCA	**CA3524**	**3602**
	Signetics	**SG3524**	**3661**
	SiliconG	SG3524	
	TI	SG3524	
	Unitrode	UC3524	
ULN-8125	SiliconG	SG3525	
	Siltronics	PWM25C	
	TI	SG3525	
	Unitrode	UC3525	
ULN-8126	SiliconG	SG3526	
	Sprague	ULS-8126	
	Unitrode	**UC1526**	**3709**
		UC526	
ULN-8127	SiliconG	SG3527	
	Siltronics	PWM27C	
	TI	SG3527	
ULN-8160	Ferranti	ZN1060	
	Philips	TDA1060	
	Signetics	**NE5560**	**3652**
		TDA1060	
ULN-8161	Signetics	NE5561	
ULN-8162	Signetics	NE5562	
ULN-8163	Signetics	NE5563	
ULN-8194	Sprague	ULS-8194	
		ULS8194	
	TI	TL494	
		TL594	
	Unitrode	UC494	
ULN-8195	Sprague	ULS-8195	
		ULS8195	
	TI	TL495	
		TL595	
	Unitrode	**UC495**	**3709**
ULQ-2002	Exar	XR2001	
		XR2201	
	Fairchild	9665	
	Motorola	**MC1411**	**3064**
		ULN2001	
		XR2201	
	NEC	μPA2001	
	RIFA	PBD352301	
	Sanyo	LB1231	
	SGS	L201	
	SiliconG	SG2001	
	Sprague	ULN-2001	
		ULN-2021	
		ULS-2001	
	TI	ULN2001	
	Toshiba	TD62001	
ULQ-2003	Exar	XR2003	
		XR2004	
		XR2203	
	Fairchild	9667	
		MC1413	
	Mitsubishi	M54523	
	Motorola	**MC1413**	**3064**
		ULN2003	
	Sanyo	LB1233	
	SGS	L203	
	Signetics	NE5603	
		ULN2003	
	SiliconG	SG2003	
	Sprague	ULN-2003	
		ULQ-2004	
		ULS-2003	
		ULS-2004	
	TI	ULN2003	
	Toshiba	TD62003	

◆ Discontinued

The manufacturers report their devices can be used as direct replacements.
Performance details often differ, so compare the specifications considering your requirements.

Sprague Electric Company (Cont'd)

Manufacturer Device	Replacement Source	Device	IC Master Page
ULQ-2004	Exar	XR2003	
		XR2004	
		XR2203	
	Fairchild	9667	
		MC1413	
	Mitsubishi	M54523	
	Motorola	**MC1413**	**3064**
		ULN2003	
	Sanyo	LB1233	
	SGS	L203	
	Signetics	NE5603	
		ULN2003	
	SiliconG	SG2003	
	Sprague	ULN-2003	
		ULQ-2003	
		ULS-2003	
		ULS-2004	
	TI	ULN2003	
	Toshiba	TD62003	
ULQ-8124	Unitrode	UC2524	
ULQ-8125	Unitrode	UC2525	
ULQ-8126	**Motorola**	**SG2526**	**3533**
	SiliconG	SG2526	
	Unitrode	UC2526	
ULQ-8194	Fujitsu	MB3759	
ULQ-8195	Fujitsu	MB3760	
ULS-2001	Exar	XR2001	
		XR2201	
	Fairchild	9665	
	Motorola	**MC1411**	**3064**
		ULN2001	
		XR2201	
	NEC	μPA2001	
	RIFA	PBD352301	
	Sanyo	LB1231	
	SGS	L201	
	SiliconG	SG2001	
	Sprague	ULN-2001	
		ULN-2021	
		ULQ-2002	
	TI	ULN2001	
	Toshiba	TD62001	
ULS-2002	RIFA	PBD352314	
	SiliconG	SG2002	
	Sprague	ULN-2022	
	TI	SN75467	
ULS-2003	Exar	XR2003	
		XR2004	
		XR2203	
	Fairchild	9667	
		MC1413	
	Mitsubishi	M54523	
	Motorola	**MC1413**	**3064**
		ULN2003	
	Sanyo	LB1233	
	SGS	L203	
	Signetics	NE5603	
		ULN2003	
	SiliconG	SG2003	
	Sprague	ULN-2003	
		ULQ-2003	
		ULQ-2004	
		ULS-2004	
	TI	ULN2003	
	Toshiba	TD62003	
ULS-2004	Exar	XR2003	
		XR2004	
		XR2203	
	Fairchild	9667	
		MC1413	
	Mitsubishi	M54523	
	Motorola	**MC1413**	**3064**
		ULN2003	
	Sanyo	LB1233	
	SGS	L203	
	Signetics	NE5603	
		ULN2003	
	SiliconG	SG2003	
	Sprague	ULN-2003	
		ULQ-2003	
		ULQ-2004	
		ULS-2003	
	TI	ULN2003	
	Toshiba	TD62003	
ULS-2012	Exar	XR2012	
	SiliconG	SG3852	
	Sprague	ULN-2012	
ULS-2013	Exar	XR2014	
	SiliconG	SG3853	
	Sprague	ULN-2014	
ULS-2014	SiliconG	SG3854	
ULS-2045	Fairchild	μA3045	
	Hitachi	HA1127	
	National	LM3045	
	Plessey	SL3045	
		SL3145	
	RCA	**CA3045**	**3601**
	Sanyo	LA3045	
	SiliconG	SG3045	
		SG3821	
ULS-8124	**Exar**	**XR1524**	**3381**
	RCA	**CA1524**	**3602**
	SiliconG	SG1524	
	TI	SG1524	
	Unitrode	**UC1524**	**3709**
ULS-8125	**Exar**	**XR1525A**	**3381**
	Motorola	**SG1525A**	**3533**
	SiliconG	SG1525A	
	Siliconix	**PWM25A**	**3081**
	TI	SG1525A	
	Unitrode	**UC1525A**	**3709**
ULS-8126	SiliconG	SG3526	
	Sprague	ULN-8126	
	Unitrode	**UC1526**	**3709**
		UC526	
ULS-8127	Unitrode	UC1527	
ULS-8160	Signetics	SE5560	526,3652
ULS-8161	Signetics	SE5561	
ULS-8163	Signetics	SE5563	
ULS-8194	Sprague	ULN-8194	
		ULS8194	
	TI	TL494	
		TL594	
	Unitrode	UC494	
ULS-8195	Sprague	ULN-8195	
		ULS8195	
	TI	TL495	
		TL595	
	Unitrode	**UC495**	**3709**
ULS2004	Exar	XR2204	
	Fairchild	9668	
	Mitsubishi	M54526	
	Motorola	**MC1416**	**3064**
		ULN2004	
	Sanyo	LB1234	
	SGS	L204	
	Signetics	NE5604	
		ULN2004	
	SiliconG	SG2004	
	Sprague	ULN-2004	
	TI	ULN2004	
	Toshiba	TD62004	

Standard Microsystems Corporation

Manufacturer Device	Replacement Source	Device	IC Master Page
COM1671	Western	UC1671	
COM2017	AMI	S1602	
	Fairchild	3730	
		F6850	**1463**
	Fujitsu	MB8868A	
	GI	AY3-1015	
	Hitachi	HD6850	
		HD68A50	
	Motorola	**MC6850**	**1505**
	National	MM5303	
	RCA	**CDP6402**	**1595**
	SMC	COM2502H	
		COM8017	
	Thomson-CSF		
		EF6850	
	Western	TR1402	
		TR1602	
		TR1863	
COM2502H	AMI	S1602	
	Fairchild	3730	
		F6850	**1463**
	Fujitsu	MB8868A	
	GI	AY3-1015	
	Hitachi	HD6850	
		HD68A50	
	Motorola	**MC6850**	**1505**
	National	MM5303	
	RCA	**CDP6402**	**1595**
	SMC	COM2017	
		COM8017	
	Thomson-CSF		
		EF6850	
	Western	TR1402	

(Continued)

Manufacturer Device	Replacement Source	Device	IC Master Page
COM2502H	Western	TR1602	
		TR1863	
COM2651	National	INS2651	
	Signetics	SCN2651	
COM2661	**Motorola**	**MC2661**	**1512**
		MC68661	
			1506,1512
	Signetics	SCN2661	
	Synertek	**SY2661**	**1696**
COM5016	Western	BR1941	
COM5025	AMI	S6852	
	Fairchild	**F6852**	**1464**
	Hitachi	HD6852	
		HD68A52	
	Motorola	**MC2652**	**1511**
		MC6852	**1505**
		MC68652	
			1506,1511
	SSS	SND5025	
	Thomson-CSF		
		EF6852	
COM7201	Intel	8272	
		8274	
	NEC	**μPD765**	**1549**
	SMC	FDC765	
COM7201A	NEC	μPD7201A	
COM7210	**NEC**	**μPD7210**	**1535**
COM8017	AMI	S1602	
	Fairchild	3730	
		F6850	**1463**
	Fujitsu	MB8868A	
	GI	AY3-1015	
	Hitachi	HD6850	
		HD68A50	
	Motorola	**MC6850**	**1505**
	National	MM5303	
	RCA	**CDP6402**	**1595**
	SMC	COM2017	
		COM2502H	
	Thomson-CSF		
		EF6850	
	Western	TR1402	
		TR1602	
		TR1863	
COM8116	GI	AY5-8116	
	Western	WD1943	
COM8136	GI	AY5-8136	
COM8251A	AMD	8251	
		AM9551	**1436**
	Intel	8251A	
	National	DP8251	
		INS8251	
	NEC	μPB8251	
	Western	TR1983	
CRT5027	SSS	SND5027	
	TI	TMS9927	
CRT5037	SSS	SND5037	
CRT7220	**NEC**	**μPD7220**	**1538**
CRT8002	SSS	SND8002	
FDC1761	Western	FD1761	
FDC1763	Western	FD1763	
FDC1765	Western	FD1765	
FDC1767	Western	FD1767	
FDC1791	Fujitsu	MB8876	
	Siemens	SAB1791	
	Synertek	SY1791	
	Western	FD1791	
FDC1792	Western	FD1792	
FDC1793	Fujitsu	MB8877	
	Siemens	SAB1793	
	Synertek	SY1793	
	Western	FD1793	
FDC1794	Western	FD1794	
FDC1795	Siemens	SAB1795	
	Western	FD1795	
FDC1797	Siemens	SAB1797	
	Western	FD1797	
FDC765	Intel	8272	
		8274	
	NEC	**μPD765**	**1549**
	SMC	COM7201	
FDC765A	NEC	μPD765A	
HDC7261	NEC	μPD7261	
MPU3870	Fairchild	3870	
	Mostek	MK3870	
	SGS	M3870	
	Telefunken	U3870	
MPU800	**National**	**NSC800**	**1516**
MPU810	National	NSC810	
MPU830	National	NSC830	
MPU831	National	NSC831	

Manufacturer Device	Replacement Source	Device	IC Master Page
ROM36000	AMI	S68364	
	GI	RO9464	
	GTEMicro	G5364	
	Intersil	IM7364	
	MicroPwr	MP2364	
	Mitsubishi	M5L2364	
	Mostek	MK36000	
	Motorola	**MCM68364**	
			4048,4054
	National	MM5235	
	NCR	NCR2364	
	RCA	**CDM5364**	**1593**
	SMOS	SMM2364	
	SGS	M36000	
	Signetics	2664A	
	SSS	SCM23C64	
		SCM23C65	
	Synertek	**SY2364**	**4211**
	TI	**TMS4764**	**4225**
	Toshiba	TM2364	
	VTI	**VT2364**	**4250**
ROM4732	AMD	AM9232	
	AMI	S68322	
		S68A332	
	Fairchild	F3532	
	GI	RO94132	
		TO94132	
	GTEMicro	2332	
	Hitachi	HN46332	
	Intersil	IM7332	
	Motorola	MC68332	
		MCM68332	
		MCM68A332	**4048**
	National	MM52132	
	NCR	2332	
		NCR2332	
	NEC	**μPD2332**	**4100**
	OKI	**MSM2932**	**4118**
	RCA	**CDM5333**	**1593**
	Rockwell	R2332	
	SiliconG	SG3532	
	SSS	SCM23C32	
	Synertek	**SY2332**	**4211**
	TI	**TMS4732**	**4226**
	Toshiba	TM2332	
		TMM333	
	Universal	UM2332	
	VTI	**VT2332**	**4249**
SR5015	AMI	S2182	
		S2183	
		S2185	
	Fairchild	3347	

Supertex Inc.

Manufacturer Device	Replacement Source	Device	IC Master Page
SM82S181	AMD	AM27PS181	
		AM27S181	
		AM27S281	
	Fairchild	93Z451	
		F93451	
	Fujitsu	MB7132	
	Harris	HM7681	
	Hitachi	HN25089	
	Intel	3628	
		3628A	
		3628B	
	MMI	6381-1	
	Motorola	**MCM7681**	**4047**
	National	**DM87S181**	**4057**
		DM87S228	
	NEC	μPB417	
	Raytheon	29631	
		29631A	**4131**
		29633	
	Signetics	825181	
		N82HS181	
		N82S181	
	TI	TBP28S86	

Synertek

Manufacturer Device	Replacement Source	Device	IC Master Page
2364B	SGS	M2362	
	Signetics	**26S64**	**4205**
SY1791	Fujitsu	MB8876	
	Siemens	SAB1791	
	SMC	FDC1791	
	Western	FD1791	
SY1793	Fujitsu	MB8877	
	Siemens	SAB1793	
	SMC	FDC1793	
	Western	FD1793	

Discontinued

Bold face device numbers indicate manufacturers data is provided in the IC Master on the pages noted.

© IC MASTER 1984

Synertek (Cont'd)

Manufacturer Device	Replacement Source	Device	IC Master Page
SY2101	AMD	AM2101A	
		AM9101	
	Intel	8101A	
	NEC	μPD2101	
SY2111	AMD	AM2111A	
		AM9111	
	Intel	8111	
	NEC	μPD2111	
SY2112	AMD	AM2112	
		AM9112	
	TI	TMS4043	
SY2128	**AMD**	**AM9128**	**3917**
	Fairchild	F3528	
	Fujitsu	MB8128	
	Intel	2128	
	Motorola	MCM2016	
	National	NMC2116	
	OKI	**MSM5128**	**4118**
	Synertek	SY2129	
	TI	TMS4016	
	Toshiba	TMM2016	
SY2129	**AMD**	**AM9128**	**3917**
	Fairchild	F3528	
	Fujitsu	MB8128	
	Intel	2128	
	Motorola	MCM2016	
	National	NMC2116	
	OKI	**MSM5128**	**4118**
	Synertek	SY2128	
	TI	TMS4016	
	Toshiba	TMM2016	
SY2147	AMD	AM2147	
	AMI	4017	
	Fujitsu	MBM2147	
	Hitachi	HM4847	
	Intel	2147	
	Intersil	IM2147	
	ITT	4547	
	Motorola	MCM2147	
	National	MM2147	
	NEC	μPD2147	
	TI	TMS2147	
	Toshiba	TMM315	
	Universal	UM2147	
SY2148	AMD	AM2148	
	Fairchild	93475	
	Fujitsu	MBM2148	
		MBM2149	
	Hitachi	HM6148	
	Intel	2148H	
		2149H	
	National	NMC2148	
	Synertek	SY2149	
SY2149	AMD	AM2148	
	Fairchild	93475	
	Fujitsu	MBM2148	
		MBM2149	
	Hitachi	HM6148	
	Intel	2148H	
		2149H	
	National	NMC2148	
	Synertek	SY2148	
SY2167	AMD	AM2167	
	Hitachi	HM6167	
	IMS	IMS1400	
	IDT	IDT6167	
	Intel	2167	
	ITT	2167	
	Mitel	M58757	
	Mitsubishi	M5M2167	
	NEC	**μPD2167**	**4086**
	TI	TMS2167	
SY2168	AMD	AM2168	
		AM2169	
	Fujitsu	MB8168	
	Hitachi	HM6168	
	IMS	IMS1420	
		IMS1421	
	Intel	2168	
	Mitsubishi	M5M2168	
	TI	TMS2168	
		TMS2169	
SY2169	INS	IMS1421	
	IDT	IDT6168	
SY23128	AMD	AM92128	
	AMI	**S23128**	**3935**
	GI	R09128	
	Hitachi	HN613128	
	Motorola	MCM63128	
	National	S2128	
			(Continued)

Manufacturer Device	Replacement Source	Device	IC Master Page
SY23128	NCR	NCR23128	
	NEC	μPD2/83128	
		μPD23/83128	
	OKI	**MSM38128**	**4118**
	Signetics	**23128-30**	**4202**
	VTI	**VT23128**	**4252**
SY23256	AMD	AM92256	
	Fujitsu	MB83256	
	GI	R09256	
	Hitachi	HN613256	
	MicroPwr	MP2326	
	Mostek	MK38000	
	Motorola	MCM63256	
	NCR	23256	
	NEC	μPD2/83256	
		μPD23/83256	
	SMOS	SMM2326	
	Signetics	23256	
	Toshiba	TMM23256	
SY23256A	EXEL	XLS23257	
SY2332	AMD	AM9232	
	AMI	S68322	
		S68A332	
	Fairchild	F3532	
	GI	R094132	
		T094132	
	GTEMicro	2332	
	Hitachi	HN46332	
	Intersil	IM7332	
	Motorola	MC68332	
		MCM68332	
		MCM68A332	**4048**
	National	MM52132	
	NCR	2332	
		NCR2332	
	NEC	**μPD2332**	**4100**
	OKI	**MSM2932**	**4118**
	RCA	**CDM5333**	**1593**
	Rockwell	R2332	
	SiliconG	SG3532	
	SSS	SCM23C32	
	SMC	ROM4732	
	TI	**TMS4732**	**4226**
	Toshiba	TM2332	
		TMM333	
	Universal	UM2332	
	VTI	**VT2332**	**4249**
SY2333	AMD	AM9233	
	AMI	**S2333**	**3932**
	Fairchild	F3533	
	GI	R09433	
	Intel	2332	
	NCR	2333	
		NCR2333	
	RCA	**CDM5332**	**1593**
	Signetics	2332	
	SSS	SCM23C33	
	Universal	UM2333-45	
	VTI	**VT2333**	**4249**
SY2364	AMI	S68364	
	GI	R09464	
	GTEMicro	G5364	
	Intersil	IM7364	
	MicroPwr	MP2364	
	Mitsubishi	M5L2364	
	Mostek	MK36000	
	Motorola	**MCM68364**	**4048,4054**
	National	MM5235	
	NCR	NCR2364	
	RCA	**CDM5364**	**1593**
	SMOS	SMM2364	
	SGS	M36000	
	Signetics	2664A	
	SSS	SCM23C64	
		SCM23C65	
	SMC	ROM36000	
	TI	**TMS4764**	**4225**
	Toshiba	TM2364	
	VTI	**VT2364**	**4250**
SY2364-2	AMD	AM92640	
	AMI	**S68B364**	**3933**
	Fairchild	**F3564-25**	**1465**
	GTEMicro	G5364	
	Mostek	MK36000-4	
	Motorola	MCM67365-25	
	NEC	μPD2/8364-20	
		μPD23/8364-20	
	Signetics	2064-20	
SY2364-3	AMD	AM9264	
	AMI	S4264	
		S68A364	**3933**
			(Continued)

Manufacturer Device	Replacement Source	Device	IC Master Page
SY2364-3	GTEMicro	2364-3	
	Hitachi	HN48364	
	Mostek	MK36000-5	
	Motorola	MCM68365	
		MCM68366	
	National	MM52164	
	NCR	2364	
	NEC	UPD2/8364-30	
		μPD23/8364-30	
	OKI	MSM2965	
	Signetics	2664A-30	
	Toshiba	TMM2364	
	Weitek	SC8164	
SY2365	AMD	AM9265	
	GI	R09864	
	GTEMicro	G5365	
	Hitachi	HN61364	
	Mostek	MK37000	
	RCA	CDM5365	
	Signetics	**2364-20**	**4196**
	Toshiba	TMM2365	
	VTI	**VT2365**	**4251**
SY2365A	EXEL	XLS2366	
SY2661	**Motorola**	**MC2661**	**1512**
		MC68661	**1506,1512**
	Signetics	SCN2661	
	SMC	COM2661	
SY3308	AMD	AM27S35	
		AM27S37	**3901**
	National	DM87SR81	
SY3316	**AMD**	**AM27S45**	**3904**
		AM27S47	**3904**
SY6500/1	Rockwell	R6500/1	
SY6502	Rockwell	R6502	
SY6503	Rockwell	R6503	
SY6504	Rockwell	R6504	
SY6505	Rockwell	R6505	
SY6506	Rockwell	R6506	
SY6507	Rockwell	R6507	
SY6512	Rockwell	R6512	
SY6514	Rockwell	R6514	
SY6515	Rockwell	R6515	
SY6520	Rockwell	R6520	
SY6521	**Motorola**	**MC6821**	**1505**
SY6522	Rockwell	R6522	
SY6530	Rockwell	R6530	
SY6532	Rockwell	R6532	
◆SY6545	Hitachi	HD6845	
	Motorola	**MC6845**	**1505**
	Rockwell	R6545	
SY6551	**AMI**	**S6551**	**1449**
	Rockwell	R6551	
SY65C02	GTEMicro	G65SC02	
SY65C06	GTEMicro	G65SC06	
SY65C12	GTEMicro	G65SC12	
SY65C13	GTEMicro	G65SC13	
SY65C14	GTEMicro	G65SC14	
SY65C15	GTEMicro	G65SC15	
SY66016	AMD	29516	
	TRW-LSI	**MPY016H**	**1164**
		MPY16HJ	
	Weitek	WTL1016	
SY68045	**AMI**	**S68045**	**1452**
Z8601	SGS	Z8601	
	Zilog	**Z8601**	**1753**
Z8602	SGS	Z8602	
	Zilog	Z8602	
Z8603	**Zilog**	**Z8603**	**1753**
Z8611	SGS	Z8611	
	Zilog	**Z8611**	**1754**
◆Z8612	SGS	Z8612	
	Zilog	**Z8612**	**1754**
◆Z8613	**Zilog**	**Z8613**	**1754**
◆Z8671	**Zilog**	**Z8671**	**1754**
◆Z8681	**Zilog**	**Z8681**	**1755**

Teledyne Crystalonics

CDR125	Intersil	D125
	Siliconix	D125
TSC701AM	Intersil	ICM7272AM
TSC7660	Datel	VI-7660
	Intersil	**ICL7660** **3498**

Teledyne Philbrick

0032	National	LH0032
	OEI	9932
1319-01	AD	AD504
1323	Datel	AM-470-2
		AM-470-2C **2865**
		(Continued)

Manufacturer Device	Replacement Source	Device	IC Master Page
1323	**Datel**	**AM-470-2M**	**2865**
	Harris	HA-2700	
		HA-2704	
		HA-2705	
1326	**Harris**	**HA-2600**	**3406**
	Intersil	HA2600	
	Motorola	MC1556	
	SiliconG	SG1556	
	TI	MC1556	
1332	**Datel**	**AM-464-2**	**2864**
	Harris	HA-2645	
	Motorola	MC1436	
		MC1439	
	National	LM1436	
		LM343	
	SiliconG	SG1436	
1340	AD	AD510	
		AD517	
		ADOP-07	**3351**
	Burr-Brown	3510	
	Datel	**AM-430**	**2864**
		AM-490-2	
	Fairchild	μA714	
	Harris	HA-2900	
		HA-2905	
		HA-5130	
		HA-5135	
	MicroPwr	MP517	
		MP5505	
		MP5507	
		OP-07	**3529**
	National	LH0044	
	NEC	μPC725	
	PMI	**OP-05**	**3566**
		OP-07	**3566**
	Raytheon	**OP-05**	**3592**
		OP-07	**3592**
	TI	OP-07	
1341	**Harris**	**HA-2540**	**3404**
1342	**Harris**	**HA-2539**	**3402**
	Signetics	**NE5539**	**3678**
1343	Harris	HA-5195	
1344	**Harris**	**HA-5160**	**3448**
1345	Harris	HA-5162	
1346	**Harris**	**HA-5180**	**3452**
1347	**Harris**	**HA-5180A**	**3452**
1359	**Harris**	**HA-5033**	**3462**
	National	LH0033	
1413	AD	AD502	
1424	AD	AD506	
	National	LH0022	
		LM0052	
	TeledyneP	1425	
1425	AD	AD506	
	National	LH0022	
		LM0052	
	TeledyneP	1424	
1430	**Datel**	**AM-500**	**2861,2865**
1437	HyComp	HC1437	
3554	**Burr-Brown**	**3554**	**2851**
4068	AMD	AM6012	
	AD	AD562	
	Burr-Brown	DAC862	
	Datel	DAC-562	
	Harris	HI562	
	MCE	MCE-6012	
	MicroPwr	MP562	
	Motorola	**AD562**	**3069**
	NEC	μPC6012	
		μPC648	
	PMI	DAC-312	
		DAC312B12	
	Raytheon	DAC-6012	
		DAC6012	
	Signetics	**AM6012**	**3605**
4084	Harris	HI5618	
4088	Harris	HIDAC16	
4089	AD	AD565A	
	Harris	HI565A	
4140	**Datel**	**ADC-EK8B**	**2862**
	TeledyneS	8700	
4141	**Datel**	**ADC-EK10B**	**2862**
	TeledyneS	8701	
4142	**Datel**	**ADC-EK12B**	**2862**
	TeledyneS	8702	
4143	Datel	ADC-ET8B	
	TeledyneS	8703	
4144	Datel	ADC-ET10B	
	TeledyneS	8704	
4145	Datel	ADC-ET12B	
	TeledyneS	8705	

◆ Discontinued

The manufacturers report their devices can be used as direct replacements.
Performance details often differ, so compare the specifications considering your requirements.

IC MASTER

INTERNATIONAL DISTRIBUTORS

ARGENTINA, COLUMBIA, ECUADOR, VENEZUELA, MEXICO, PERU
Intectra
2629 Terminal Blvd.
Mt. View, CA 94043
Tel. (415) 967-8818

AUSTRALIA
A J Distributors Pty Ltd.
P.O. Box 71
Prospect, S. Australia 5082
Tel. 269-1244
Telex (790) 82635

AUSTRIA
Becos Electronic Ges. M.G.H.
Gablenzgasse 52
A-1160 Vienna, Austria
Tel. 0222/959145
Telex (847) 134606

BELGIUM
J. P. LeMaire S.A.
Limberg, Stirum 243
1810 Wemmel, Belgium
Tel. 02/4784847
Telex (846) 24610

BRAZIL
Filcres Importacao
Rua Aurora
CEP 01209
Caixa Postal 18767
Sao Paulo, Brazil
Tel. (011) 223 7388
Telex (391) 113298

CANADA
Future Electronics
237 Hymus Blvd.
Pointe Claire
Quebec H9R 5C7
Canada
Tel. 514-694-7710
TWX: 610-421-3251
Telex 05-823554

DENMARK
Advanced Electronik
55, Mariendalsvej
DK2000, Copenhagen F, Denmark
Tel. 01 194433
Telex (855) 22431

ENGLAND
Paterson/Steadman & Partner Ltd.
The Hub
Emson Close
Saffron Walden, Essex
CB10 1HL, England
Tel. 27067
Telex (851) 81653

J. B. Tratsart Ltd.
Dogmersfield Nr.
Baskingstroke
Hampshire RG27 8SU, England
Tel. 02514 3334
Telex (851) 916196

FINLAND
ITT Multikomponent
Tyopajakatu 5
PL107,00501
Helsinki 50, Finland
Tel. 739100
Telex (857) 121450

FRANCE
Conseilet Promotion
28 Rue de la Procession
92150 Suresnes, France
Tel. 5064275
Telex (842) 614596F

HOLLAND
Manudax-Nederland B.V.
54732G Heeswijk (N.B.)
Meerstraat 7, Holland
Tel. 04139 2901
Telex (844) 50175

HONG KONG
Conmos Products, Ltd.
Haynein Bldg., 11th Floor
1 Tai Yip Street
Keun Tong, Kowloon, Hong Kong
Tel. 3-684572
Telex (780) 85448

INDIA, MALAYSIA, SINGAPORE, THAILAND
Radio & Craft Publications
4794/23 Bharat Ram Road
Daryanganj, New Delhi 2, India
Tel. 277147

ISRAEL
STG International Ltd.
10 Humberman Street
P. O. Box 1276
61012 Tel Aviv, Israel
Tel. 248231
Telex (922) 342229

ITALY
Gruppo Editoriale Jackson S.R.L.
Via Rosellini 12
20124 Milan, Italy
Tel. 68 80951
Telex (843) 315366

JAPAN
Asahi Glass Company, Ltd. Electronic Components Group
1-2 Marunouchi 2-chome
Chiyoda-ku, Tokyo 100, Japan
Tel. (03) 218-5813
Telex (781) TK4616

Overseas Data Service Co. Ltd.
Shugetsu Building No. 12-7
Kita-Aoyama 3-chome
Minato-ku, Tokyo 107, Japan
Tel. (03) 400-7090
Telex (781) J26487

Tokyo International Communications Inc.
Miyajima Bldg.
28 Yoyogi 1-chome,
Shibuya-ku
Tokyo 151, Japan
Tel. 379-2561
Telex (781) 33106

NORWAY
Fagbokservice A.S.
Ekebergn, 130B
Box 94
Bekkelagshogda, Oslo 2, Norway
Tel. (02) 282237

SOUTH AFRICA
Suntronika
Dargene House,
10 Station Street
Braamfontein, Johannesburg
South Africa
Tel. 725-1210
Telex (960) 4-24143

SPAIN
Sagitron
Castello 25, 2, °
Madrid 1, Spain
Tel. 402 6085
Telex (831) 43819

SWEDEN
Fertronic AB
Snormakarvagen 35
Box 56,
16126 Bromma, Sweden
Tel. 08/252610
Telex (854) 11181

SWITZERLAND
W. Stolz AG
Taefernstrasse 15
CH-5404 Baden-Daettwil
Switzerland
Tel. 056 840151
Telex (845) 54070Z

TAIWAN
Helm Engineering & Trading Co.
49 No. 143 Section 4
Hsin Yi Rd.
Taipei, Taiwan, ROC
Tel. 709-1888
Telex (785) 28204

TURKEY
EMPA Elektronik (Mamulleri Pazarlama AS)
Tersane Cad. Kuthan 38/408
Tr-Kara Koy — Istanbul, Turkey
Tel. (11) 496249
Telex 24429

WEST GERMANY
Astronic GmbH
Winzererstrasse 47d
8000 Munich 40, West Germany
Tel. (089) 309031
Telex (841) 5216187

Hearst
HEARST BUSINESS COMMUNICATIONS, INC./UTP DIVISION
645 Stewart Avenue, Garden City, NY 11530 (516) 222-2500 TWX: 510-222-1673

If you need

IC Master Catalog

you need

Integrated Circuits Magazine.

Not only will Integrated Circuits Magazine update your IC Master Catalog...
...it will provide valuable IC application and selection information in every issue.

SUBSCRIBE TODAY!

Subscription card located inside back cover of Volume I or available from publisher upon request.

Teledyne Philbrick (Cont'd)

Manufacturer Device	Replacement Source	Device	IC Master Page
4146	Datel	ADC-EK12D	
	TeledyneS	8750	
4551	AD	AD7507	
	Burr-Brown	**MPC8D**	**2850**
	Datel	**MXD-807**	**2864**
		MXD-807	**2864**
	Harris	HI507	
		HI507A	
	Intersil	IH6216	
	MicroPwr	MP7507	
	PMI	MUX-28	
	Siliconix	DG507	
		DG507A	
4553	**Burr-Brown**	**MPC4D**	**2850**
	Datel	**MXD-409**	**2864**
	Harris	HI-509	
		HI509	
		HI509A	
	Intersil	IH6208	
	MicroPwr	MP7509	
	National	LF11509	
		LF13509	
	PMI	MUX-24	
	Siliconix	DG509	
		DG509A	
4554	AD	AD7501	
	Burr-Brown	MPC8S	
	Datel	**MX-808**	**2864**
	Harris	HI-508	
		HI508	
		HI508A	
	Intersil	IH6108	
	MicroPwr	MP7501	
		MP7508	
	National	LF11508	
		LF13508	
	PMI	DMX-88	
		MUX-08	
		MUX-88	
	Siliconix	DG508	
		DG508A	
4780	**Datel**	**VFQ-1**	**2865**
	TeledyneS	9400	
4781	**Datel**	**VFQ-2**	**2865**
	TeledyneS	9401	
4782	**Datel**	**VFQ-3**	**2865**
	TeledyneS	9402	
4856	AD	AD583	
	Datel	**SHM-IC-1**	**2864**
	Harris	**HA-2425**	**2955**
	PMI	SMP-10	
		SMP-11	
4860	AD	HTC0300A	
	MicroNet	**MN0300A**	**3045**
		MN376	**3045**
		MN377	**3045**
TP-4084	Harris	HI-5618	
TP-4086	Harris	HI-5320	
TP-4087	Harris	HI-5680I	
TP-4088	Harris	HI-DAC16	
TP-4860	**AD**	**HTC-0300**	**2847**
	DDC	THA-05203	
TP-7541	AD	AD7541	
	Datel	**DAC-7541**	**2863**
	Harris	HI-7541	
		HI17541	
	HybridSys	HS7541	
	Intersil	AD7541	
		ICL7541	
	MicroPwr	MP7541	
		MP7621	
	TeledyneP	TP7541	
	TeledyneS	7541	
TP4134	Datel	ADC-EH12B	
	DDC	ADC4454	
TP5214	**AD**	**AD5214**	**2838**
	Datel	**ADC-5214**	**2860**
	HybridSys	MN5214	
	MicroNet	**MN5214**	**3043**
TP7541	AD	AD7541	
	Datel	**DAC-7541**	**2863**
	Harris	HI-7541	
		HI17541	
	HybridSys	HS7541	
	Intersil	AD7541	
		ICL7541	
	MicroPwr	MP7541	
		MP7621	
	TeledyneP	TP-7541	
	TeledyneS	7541	

Manufacturer Device	Replacement Source	Device	IC Master Page
TPDAC80	AD	ADDAC80	
		ADDAC85	
	Burr-Brown	DAC80	
		DAC85	
	Datel	DAC-85	
		DAC-HZ12B	
	HybridSys	**DAC9356**	**2986**
		HSDAC80	
	MicroNet	**DAC80**	**3044**
		DAC85	
	National	DAC1280	
		DAC1285	

Teledyne Semiconductor

Manufacturer Device	Replacement Source	Device	IC Master Page
747	AMD	747	
	Fairchild	μA747	
	Hitachi	HA17747	
	MicroPwr	MP0P04	
	Motorola	MC1747	
	National	LM747	
	NEC	μPC251	
	PMI	**OP-04**	**3566**
		PM747	
	Raytheon	RC747	
		RM747	
	RCA	CA747	
	Signetics	μA747	
	SiliconG	SG747	
	TI	μA747	
7541	AD	AD7541	
	Datel	**DAC-7541**	**2863**
	Harris	HI-7541	
		HI17541	
	HybridSys	HS7541	
	Intersil	AD7541	
		ICL7541	
	MicroPwr	MP7541	
		MP7621	
	TeledyneP	TP-7541	
		TP7541	
8700	**Datel**	**ADC-EK8B**	**2862**
	TeledyneP	4140	
8701	**Datel**	**ADC-EK10B**	**2862**
	TeledyneP	4141	
8702	**Datel**	**ADC-EK12B**	**2862**
	TeledyneP	4142	
8703	Datel	ADC-ET8B	
	TeledyneP	4143	
8704	Datel	ADC-ET10B	
	TeledyneP	4144	
8705	Datel	ADC-ET12B	
	TeledyneP	4145	
8750	Datel	ADC-EK12D	
	TeledyneP	4146	
9400	**Datel**	**VFQ-1**	**2865**
	TeledyneP	4780	
9401	**Datel**	**VFQ-2**	**2865**
	TeledyneP	4781	
9402	**Datel**	**VFQ-3**	**2865**
	TeledyneP	4782	
9491	AD	AD589	
	Ferranti	ZN423	
	Intersil	**ICL8069**	**3521**
	MicroPwr	**MP5010**	**3529**
	National	LM113	
		LM313	
9495	**MicroPwr**	**MP5531**	**3529**
		REF-02	
	PMI	REF-02	
9496	HybridSys	HSREF01	
	MicroPwr	**MP5532**	**3529**
		REF-01	
	Motorola	**MC1404-10**	**3535**
		MC1504-10	**3535**
	PMI	REF-01	
	Raytheon	**REF-01**	**3584**
TSC14433	Motorola	MC14433	
	TeledyneS	TSC14433A	
TSC7106	**Intersil**	**ICL7106**	**2995**
	MicroPwr	**MP7138**	**3046**
TSC7107	**Intersil**	**ICL7107**	**2995**
TSC7109	Datel	ADC-7109	
	Intersil	**ICL7109**	**2995**
TSC7116	Intersil	ICL7116	
TSC7117	Intersil	ICL7117	
TSC7126	Intersil	ICL7126	
TSC7135	**Intersil**	**ICL7135**	**3003**
TSC7211	Hughes	HLCD7211	
	Intersil	ICL7211	
	RCA	**CD22104**	**839**
		CD22105	**839**

Manufacturer Device	Replacement Source	Device	IC Master Page
TSC7212	**Intersil**	**ICM7212**	**779**
TSC8640	Harris	HI-7541	
	TeledyneS	TSC8641	
TSC8641	Harris	HI-7541	
	TeledyneS	TSC8640	

Telefunken

Manufacturer Device	Replacement Source	Device	IC Master Page
TBA120	National	TBA120	
	Plessey	TBA120	
	Siemens	TBA120	
	Signetics	TBA120	
TBA530	National	TBA530	
	Plessey	TBA530	
TBA540	National	TBA540	
	Plessey	TBA540	
	Signetics	TBA540	
TBA560	National	TBA560	
	Plessey	TBA560	
TBA990	National	TBA990	
	Plessey	TBA990	
TCA830	SGS	TCA830	
TCA840	SGS	TCA840	
TDA1083	Hitachi	HA12402	
	Sprague	ULN-2204	
	Toshiba	TA7613	
TDA2002	Hitachi	TDA2002	
	NEC	μPC2002	
	SGS	TDA2002	
TDA2140	SGS	TDA2140	
TDA2151	SGS	TDA2151	
TDA2161	SGS	TDA2161	
TDA2591	National	TDA2591	
	Plessey	TDA2591	
TDA2593	National	TDA2593	
	Plessey	TDA2593	
	Signetics	TDA2593	
TDA440	National	TDA440	
	Plessey	TDA440	
	SGS	TDA440	
TDA4420	SGS	TDA4420	
TDA4421	SGS	TDA4421	
U3870	Fairchild	3870	
	Mostek	MK3870	
	SGS	M3870	
	SMC	MPU3870	
U417	Hitachi	HA1137	
		HA1230	
	National	CA3089	
		LM3089	
	RCA	CA3089	
	Sanyo	LA1230	
		LA3089	
	SGS	TCA3089	
		TDA1200	
	Signetics	CA3089	
	TI	SN76689	

Telmos

Manufacturer Device	Replacement Source	Device	IC Master Page
TM7650	**Datel**	**AM-7650**	**2865**
	Intersil	ICL7650	

Texas Instruments

Manufacturer Device	Replacement Source	Device	IC Master Page
9615	Fairchild	96115	
		9615	
	TI	SN55115	
		SN75115	
9636	Fairchild	9636A	
	Motorola	MC3488	
	TI	9636A	
9637	Fairchild	9637A	
	TI	9637A	
9643	Fairchild	9643	
ADC0801	**Intersil**	**ADC0801**	**2993**
	National	ADC0801	
ADC0802	**Intersil**	**ADC0802**	**2993**
	National	ADC0802	
ADC0803	**Datel**	**ADC-830**	**2863**
	Intersil	**ADC0803**	**2993**
	National	ADC0803	
ADC0804	**Intersil**	**ADC0804**	**2993**
	National	ADC0804	
ADC0808	Mostek	MK0808	
	National	ADC0808	
ADC0809	Mostek	MK50809	
	National	ADC0809	
ADC0816	Datel	DAS-952	
	Mostek	MK50816	
	National	ADC0816	

Manufacturer Device	Replacement Source	Device	IC Master Page
AM26LS31	AMD	AM26LS31	
	Motorola	**AM26LS31**	**3064**
	National	DS26LS31	
AM26LS32	AMD	AM28LS32	
	National	DS26LS32	
AM26LS33	AMD	AM26LS33	
AM26S10	AMD	AM26S10	
	Fairchild	9640	
	Motorola	DC26S10	
	National	DS26S10	
AM26S11	AMD	AM26S11	
	National	DS26S11	
DM54S472	Fujitsu	MB7124E-W	
		MBM7124	
	MMI	5349-1	
	National	**DM54S472**	**4057**
	Signetics	**S82S147**	**532**
DS7831	National	DS7831	
DS7832	National	DS7832	
DS8820	National	DS8820	
		DS8880	
	TI	SN75182	
		SN75480	
DS8830	National	DS8830	
	TI	SN75183	
DS8831	National	DS8831	
DS8832	National	DS8832	
LL081BC	Motorola	MC34001A	
LM101	AMD	LM101	
	AD	AD101	
	Fairchild	μA101	
	Intersil	AD101	
	LinearTech	LM101	
	Motorola	LM101	
	Raytheon	LM101	
	SiliconG	SG101	
	Thomson-CSF	SFC2101	
LM101A	LinearTech	LM101A	
	National	LM101A	
LM106	National	LM106	
LM107	AMD	LM107	
	AD	**AD741S**	**3351**
	Intersil	LM107	
	LinearTech	LM107	
	National	LM107	
	Raytheon	LM107	
	SiliconG	SG107	
	Thomson-CSF	SFC2107	
LM111	AMD	LM111	
	AD	AD111	
	Fairchild	μA111	
	Intersil	LM111	
	Motorola	LM111	
	National	LM111	
	Raytheon	LM111	
	Signetics	LM111	
	SiliconG	SG111	
	Thomson-CSF	SFC2111	
LM117	LinearTech	LM117	
	MCE	MCE-LM117	
	Motorola	**LM117**	**3532**
	National	LM117	
	SiliconG	SG117	
LM118	AMD	LM118	
	LinearTech	LM118	
	National	LM118	
LM124A	AMD	LM124A	
	Motorola	LM124A	
	National	LM124A	
	RCA	CA124A	
	Signetics	LM124A	
	SiliconG	SG124	
LM137	LinearTech	LM137	
	MCE	MCE-LM137	
	Motorola	**LM137**	**3532**
	National	LM137	
LM139	AMD	LM139	
	Fairchild	μA139	
	Motorola	LM139	
	National	LM139	
	PMI	CMP-04	
		PM139	
	Raytheon	LM139	
	RCA	**CA139**	**3599**
	Signetics	LM139	
	SiliconG	SG139	
LM139A	AMD	LM139A	
	Motorola	LM139A	
	National	LM139A	

(Continued)

◆ Discontinued

Bold face device numbers indicate manufacturers data is provided in the IC Master on the pages noted.

© IC MASTER 1984

Texas Instruments (Cont'd)

Manufacturer Device	Replacement Source	Device	IC Master Page
LM139A	PMI	CMP-04	
		PM139A	
	RCA	**CA139A**	**3599**
	SiliconG	SG139A	
LM148	AMD	LM148	
	National	LM148	
	Raytheon	LM148	
		RM4156	
LM158	Motorola	LM158	
	National	LM158A	
	Raytheon	RM4139	
	RCA	CA158A	
	Signetics	LM158	
LM193	Fairchild	μA193	
	Motorola	LM193	
	National	LM193A	
	Signetics	LM193	
LM201	AMD	LM201	
	AD	AD201	
	Fairchild	μA201	
		μA748	
	Intersil	LM748	
		μA748	
	Motorola	LM201	
		MC1748	
	National	LM201	
		LM748	
	Plessey	SL748	
	RCA	CA201	
		CA748	
		LM748	
	SiliconG	SG201	
		SG748	
	TI	SN72748P	
		μA748	
	Thomson-CSF	SFC2201	
		SFC2748	
LM201A	National	LM201A	
LM211	AMD	LM211	
	AD	AD211	
	Motorola	LM211	
	National	LM211	
	RCA	LM211	
	Signetics	LM211	
	SiliconG	SG211	
	Thomson-CSF	SFC2211	
LM217	MCE	MCE-LM217	
	Motorola	**LM217**	**3532**
	National	LM217	
	SiliconG	SG217	
	Thomson-CSF	TDE0117	
LM218	AMD	LM218	
	National	LM218	
	Thomson-CSF	TDE0118	
LM224	AMD	LM224	
	Fairchild	μA224	
	Motorola	LM224	
	National	LM224	
	Raytheon	LM224	
	RCA	CA224	
	Signetics	LM224	
	SiliconG	SG224	
	Thomson-CSF	TDE0124	
LM237	MCE	MCE-LM237	
	National	LM237	
LM239	AMD	LM239	
	Fairchild	μA239	
	Motorola	LM239	
	National	LM239	
	PMI	CMP-04	
		PM239	
	Raytheon	LM239	
	RCA	**CA239**	**3599**
	Signetics	LM239	
	SiliconG	SG239	
	Thomson-CSF	TDE0139	
LM248	AMD	LM248	
	National	LM248	
	Thomson-CSF	TDE0148	
LM258	Motorola	LM258	
	National	LM258A	
	RCA	CA258A	

(Continued)

Manufacturer Device	Replacement Source	Device	IC Master Page
LM258	Signetics	LM258	
	Thomson-CSF	TDE0158	
LM2900	Hitachi	HA17301	
	Motorola	LM2900	
		MC3301	
	National	LM2900	
		LM3301	
	Raytheon	LM2900	
		RC3301	
LM2901	Fairchild	μA2901	
		μA3302	
	Motorola	LM2901	
		MC3302	
	National	LM2901	
		LM3302	
	NEC	μPC2901	
	PMI	CMP-04	
	Raytheon	LM2901	
		RC3302	
	RCA	CA3302	
	Signetics	LM2901	
		MC3302	
	SiliconG	SG3302	
	TI	LM3302	
LM2902	Fairchild	μA2902	
	Hitachi	HA17902	
	Motorola	LM2902	
	National	LM2902	
	NEC	μPC2902	
	Raytheon	LM2902	
LM2903	AMD	LM311	
	AD	AD311	
	Fairchild	μA2903	
		μA311	
	Intersil	LM311	
	Motorola	LM2903	
		LM311	
	National	LM2903	
		LM311	
	NEC	μPC271	
		μPC311	
	Raytheon	LM311	
	RCA	**CA311**	**3598**
		LM311	
	Signetics	LM2903	
		LM311	
	SiliconG	SG311	
	TI	LM311	
	Thomson-CSF	SFC2311	
		SFC3111	
LM2904	Motorola	LM2904	
	National	LM2904	
	RCA	CA2904	
LM293	Fairchild	μA293	
	Motorola	LM293	
	National	LM293	
	Signetics	LM293	
LM301	AD	AD301	
	Fairchild	μA301A	
	Intersil	AD301	
	LinearTech	LM301	
		LM301A	
	Motorola	LM301	
	National	LM301	
		LM301A	
	NEC	μPC157	
		μPC301	
	Raytheon	LM301	
	RCA	CA301	
		LM301	
	SiliconG	SG301	
	TI	LM301A	
	Thomson-CSF	SFC2301	
	Toshiba	TA7506	
LM301A	AD	AD301	
	Fairchild	μA301A	
	Intersil	AD301	
	LinearTech	LM301	
		LM301A	
	Motorola	LM301	
	National	LM301	
		LM301A	
	NEC	μPC157	
		μPC301	
	Raytheon	LM301	
	RCA	CA301	
		LM301	
	SiliconG	SG301	
	TI	LM301	

(Continued)

Manufacturer Device	Replacement Source	Device	IC Master Page
LM301A	Thomson-CSF	SFC2301	
	Toshiba	TA7506	
LM306	AMD	LM306	
	National	LM306	
LM307	AMD	LM307	
	AD	**AD741J**	**3351**
	Intersil	LM307	
	LinearTech	LM307	
	Motorola	LM307	
	National	LM307	
	Raytheon	LM307	
	RCA	CA307	
	SiliconG	SG307	
	Thomson-CSF	SFC2307	
LM311	AMD	LM311	
	AD	AD311	
	Fairchild	μA2903	
		μA311	
	Intersil	LM311	
	Motorola	LM2903	
		LM311	
	National	LM2903	
		LM311	
	NEC	μPC271	
		μPC311	
	Raytheon	LM311	
	RCA	**CA311**	**3598**
		LM311	
	Signetics	LM2903	
		LM311	
	SiliconG	SG311	
	TI	LM2903	
	Thomson-CSF	SFC2311	
		SFC3111	
LM317	Fairchild	μA317	
	LinearTech	LM317	
	MCE	MCE-LM317	
	Motorola	**LM317**	**3532**
	National	LM317	
	SiliconG	SG317	
	Thomson-CSF	TDB0117	
LM318	AMD	LM318	
	AD	AD518	
	Fairchild	μA318	
	National	LM318	
	NEC	μPC159	
	Thomson-CSF	TDB0118	
LM320-12	Fairchild	μA7912	
		μA79M12	
	Lambda	LμA7912	
	Motorola	MC7912	
	National	LM320MP12	
		LM7912	
		LM79M12	
	SiliconG	SG320P-12	
		SG7912	
	TI	μA7912	
	Thomson-CSF	TDB2912	
LM320-5	Fairchild	μA7915	
	Lambda	LμA7915	
	Motorola	MC7915	
	National	LM320-15	
		LM320T15	
		LM7915	
	SiliconG	SG320-15	
		SG7915	
	TI	μA7915	
	Thomson-CSF	TDB2915	
LM324	AMD	LM324	
	Exar	**XR3403**	**3378**
		XR3403C	
	Fairchild	μA324	
		μA3403	
	Motorola	LM324	
		MC3403	
	National	LM324	
	NEC	μPC324	
	Raytheon	LM324	
		RC3403	
		RC4137	
	RCA	CA324	
		LM324	
	Sanyo	LA6324	
	Signetics	LM324	
		MC3403	
	SiliconG	SG324	

(Continued)

Manufacturer Device	Replacement Source	Device	IC Master Page
LM324	TI	MC3403	
	Thomson-CSF	TDB0124	
LM324A	National	LM324A	
LM3302	Fairchild	μA2901	
		μA3302	
	Motorola	LM2901	
		MC3302	
	National	LM2901	
		LM3302	
	NEC	μPC2901	
	PMI	CMP-04	
	Raytheon	LM2901	
		RC3302	
	RCA	CA3302	
	Signetics	LM2901	
		MC3302	
	SiliconG	SG3302	
	TI	LM2901	
LM337	LinearTech	LM337	
	MCE	MCE-LM337	
	National	LM337	
	Thomson-CSF	TDB0137	
LM339	AMD	LM339	
		LM339A	
	Fairchild	μA339	
	Hitachi	HA17901	
	Motorola	LM339	
	National	LM339	
	NEC	μPC339	
	PMI	CMP-04	
		PM339A	
	Raytheon	LM339	
	RCA	**CA339**	**3599**
		CA339A	**3599**
		LM339	
	SiliconG	SG339	
	Thomson-CSF	TDB0139	
LM340-15	Fairchild	μA7815	
		μA78L15	
	Lambda	LMC7815	
		LμA7815	
	Motorola	**MC7815**	**3531**
		MC78L15	
	National	LM340-15	
		LM340LA-15	
		LM340T-15	
		LM7815	
		LM78L15	
	NEC	μPC7815	
		μPC78L15	
	SGS	L7815	
	SiliconG	SG340-15	
		SG7815	
	TI	μA7815	
		μA78L15	
	Thomson-CSF	SFC2815	
	Toshiba	TA78015	
LM340-18	Fairchild	μA7818	
	Lambda	LMC7818	
	NEC	μPC7818	
	SiliconG	SG340-18	
		SG7818	
	TI	μA7818	
LM340-24	Fairchild	μA7824	
	Lambda	LMC7824	
		LμA7824	
	Motorola	**MC7824**	**3532**
	NEC	μPC7824	
	SGS	L7824	
	SiliconG	SG7824	
	TI	μA7824	
LM340-8	Fairchild	μA7808	
	Lambda	LMC7808	
		LμA7808	
	Motorola	**MC7808**	**3531**
	NEC	μPC7808	
	SiliconG	SG340-8	
		SG7808	
	TI	μA7808	
LM348	AMD	LM348	
	Exar	**XR4212**	**3378**
	Fairchild	μA348	
	Harris	HA-4741	
	MicroPwr	MP5511	
	Motorola	MC4741	
	National	LM348	
	NEC	μPC4741	
	PMI	OP-11	

(Continued)

◆ Discontinued

The manufacturers report their devices can be used as direct replacements.
Performance details often differ, so compare the specifications considering your requirements.

Texas Instruments (Cont'd)

Manufacturer Device	Replacement Source	Device	IC Master Page
LM348	Raytheon	HA4741	
		LM348	
		RC4156	
	Thomson-CSF		
		TDB0111	
		TDB0148	
LM350	Fairchild	μA78HGA	
	Lambda	LAS14U	
		LAS19U	
	LinearTech	LM350	
	Motorola	**LM350**	**3532**
	National	LM350	
	SiliconG	SG350	
LM358	Motorola	LM358	
	National	LM358A	
	NEC	μPC358	
	RCA	CA358A	
		LM358	
	Sanyo	LA6358	
	Signetics	LM358	
		NE532	
LM388	National	LM388	
LM3900	Motorola	MC3401	
	National	LM3401	
		LM3900	
	Raytheon	LM3900	
		RC3401	
	RCA	CA3401	
LM393	Fairchild	μA393	
	Motorola	LM393	
	National	LM393	
	Sanyo	LA6393	
	Signetics	LM393	
MC1445	Motorola	MC1445	
MC1456	**Datel**	**AM-460-2**	**2864**
	Harris	HA-2605	
	Intersil	HA2605	
	Motorola	MC1456	
	SiliconG	SG1456	
MC1458	AMD	AM1458	
	Exar	XR1458	
		XR4558	
	Fairchild	μA1458	
	Harris	HA-2655	
	Hitachi	HA17458	
	MicroPwr	MPOP14	
	Motorola	MC1458	
		MC4558C	
		RC4558	
	National	LM1458	
	NEC	μPC1458	
		μPC4558	
	PMI	PM1458	
	Raytheon	RC1458	
		RC4558	**3592**
	RCA	CA1458	
		LM1458	
		RC4558	
		SSS1458	
	Sanyo	LA6458A	
	Signetics	MC1458	
		NE4558	
	SiliconG	SG1458	
	TI	RC4558	
MC1488	AMD	MC1488	
	Exar	**XR1488**	**3384**
	Fairchild	μA1488	
	Hitachi	HD75188	
	Motorola	**MC1488**	**3064**
	National	DS1488	
	Raytheon	RM1488	
	Signetics	MC1488	
	SiliconG	SG1488	
	TI	SN75188	
MC1489A	**Exar**	**XR1489A**	**3384**
	Fairchild	μA1489A	
	Motorola	**MC1489A**	**3064**
	National	DS1489A	
	Signetics	MC1489A	
	SiliconG	SG1489A	
	TI	SN75189A	
MC1556	**Harris**	**HA-2600**	**3406**
	Intersil	HA2600	
	Motorola	MC1556	
	SiliconG	SG1556	
	TeledyneP	1326	
MC1558	AMD	AM1558	
	Exar	XR1558	
	Fairchild	μA1558	
	Harris	**HA-2650**	**3414**

(Continued)

Manufacturer Device	Replacement Source	Device	IC Master Page
MC1558	Motorola	MC1558	
		MC4558	
		RC1558	
	National	LM1558	
	PMI	**OP-14**	**3566**
		PM1558	
	Raytheon	RC1558	
		RM1558	
		RM4558	
	RCA	CA1558	
		LM1558	
		SSS1558	
	Signetics	MC1558	
	SiliconG	SG1558	
	TI	RM4558	
MC3303	Fairchild	μA3303	
	Motorola	MC3303	
	Signetics	MC3303	
MC3403	AMD	LM324	
	Exar	**XR3403**	**3378**
		XR3403C	
	Fairchild	μA324	
		μA3403	
	Motorola	LM324	
		MC3403	
	National	LM324	
	NEC	μPC324	
	Raytheon	LM324	
		RC3403	
		RC4137	
	RCA	CA324	
		LM324	
	Sanyo	LA6324	
	Signetics	LM324	
		MC3403	
	SiliconG	SG324	
	TI	LM324	
	Thomson-CSF		
		TDB0124	
MC3423	Motorola	MC3423	
	SiliconG	SG3423	
MC3446	Motorola	MC3446	
		MC3446A	**3064**
MC3486	**Motorola**	**MC3486**	**3064**
	National	DS3486	
MC3487	**Motorola**	**MC3487**	**3064**
	National	DS3487	
		DS3687	
MC3503	**Exar**	**XR3503**	**3378**
	Motorola	MC3503	
	Raytheon	RC3503	
		RM3503	
		RM4137	
	Signetics	MC3503	
	SiliconG	SG3503	
MC3523	Motorola	MC3523	
	SiliconG	SG3523	
N8T13	Motorola	MC8T13	
	National	DS75121	
		LM75121	
	Signetics	**N8T13**	**876**
	TI	SN75121	
N8T14	Motorola	MC8T14	
	National	DS75122	
		LM75122	
	Signetics	N8T14	
	TI	SN75122	
N8T23	Motorola	MC8T23	
	National	DS75123	
		LM75123	
	Signetics	**N8T23**	**876**
	TI	SN75123	
N8T24	Motorola	MC8T24	
	National	DS75124	
		LM75124	
	Signetics	**N8T24**	**876**
	TI	SN75124	
N8T26A	Fairchild	μA8T26A	
	Motorola	MC8T26A	
	National	DS8T26A	
	Signetics	**N8T26A**	**876**
NE5532	**Exar**	**XR5532**	**3378**
	Signetics	**NE5532**	**3644**
		NE5532A	
			3644,3644
		SE5532	**526,3644**
		SE5532A	
			526,3644,3644
	TI	NE5532A	
NE5532A	**Exar**	**XR5532**	**3378**
	Signetics	**NE5532**	**3644**

(Continued)

Manufacturer Device	Replacement Source	Device	IC Master Page
NE5532A	**Signetics**	**NE5532A**	
			3644,3644
		SE5532	**526,3644**
		SE5532A	
			526,3644,3644
	TI	NE5532	
NE5533	**Exar**	**XR5533**	**3379**
	Signetics	**NE5533**	**3646**
		NE5533A	**3646**
NE5534	**Datel**	**AM-453-2C**	**2864**
	Exar	**XR5534**	**3379**
	Raytheon	**RC5534**	**3592**
	Signetics	NE5534	
		NE5534A	**3646**
	TI	NE5534A	
NE5534A	**Datel**	**AM-453-2C**	**2864**
	Exar	**XR5534**	**3379**
	Raytheon	**RC5534**	**3592**
	Signetics	NE5534	
		NE5534A	**3646**
	TI	NE5534	
NE555	Cherry	CS555	
	Exar	XR555	
	Fairchild	μA555	
	Hitachi	HA17555	
	Motorola	MC1455	
	National	LM555	
	NEC	μPC1555	
	Raytheon	RC555	
	RCA	CA555	
		CA555	**3604**
	Sanyo	LB8555	
	Signetics	NE555	
	SiliconG	SG555	
NE556	AMD	LM556	
	Exar	XR556	
		XR556M	
	Fairchild	μA556	
	Motorola	MC3456	
		MC3556	
	National	LM556	
	Raytheon	RC556	
		RM556	
	Signetics	NE556	
		SE556	**526**
	SiliconG	SG556	
	TI	SE556	
NE592-8	Intersil	NE592-8	
OP-07	AD	AD-OP07	
		OP-07	
	Harris	HA-OP07	
	LinearTech	OP-07	
	PMI	**OP-07**	**3566**
	Raytheon	**OP-07**	**3592**
RC4136	Exar	XR4136	
	Fairchild	μA4136	
	MicroPwr	MP5509	
	PMI	OP-09	
		PM4136	
	Raytheon	RC4136	
	SiliconG	SG4136C	
RC4558	AMD	AM1458	
	Exar	XR1458	
		XR4558	
	Fairchild	μA1458	
	Harris	HA-2655	
	Hitachi	HA17458	
	MicroPwr	MPOP14	
	Motorola	MC1458	
		MC4558C	
		RC4558	
	National	LM1458	
	NEC	μPC1458	
		μPC4558	
	PMI	PM1458	
	Raytheon	RC1458	
		RC4558	**3592**
	RCA	CA1458	
		LM1458	
		RC4558	
		SSS1458	
	Sanyo	LA6458A	
	Signetics	MC1458	
		NE4558	
	SiliconG	SG1458	
	TI	RC4558	
RM4136	**Exar**	**XR4136M**	**3378**
	Raytheon	RM4136	
	SiliconG	SG4136	
RM4558	AMD	AM1558	
	Exar	XR1558	
	Fairchild	μA1558	

(Continued)

Manufacturer Device	Replacement Source	Device	IC Master Page
RM4558	**Harris**	**HA-2650**	**3414**
	Motorola	MC1558	
		MC4558	
		RC1558	
	National	LM1558	
	PMI	**OP-14**	**3566**
		PM1558	
	Raytheon	RC1558	
		RM1558	
		RM4558	
	RCA	CA1558	
		LM1558	
		SSS1558	
	Signetics	MC1558	
	SiliconG	SG1558	
	TI	MC1558	
SBP8316	AMD	AM9218	
	Fairchild	3516	
		68316	
		F3516	
		F35316	
		F68316	**1464**
	GI	RO3-9316	
	GTEMicro	2316	
	Intel	2316	
	Mostek	MK34000	
	Motorola	MCM68316	
		MCM68A316	
		MM2316	
	National	MM52116	
		MM5258	
	NCR	2316	
		NCR2316	
	NEC	μPD2316	
	OKI	**MSM2916**	**4118**
	Rockwell	R2316	
	SGS	M2316	
	Toshiba	TMM331A	
		TMM334	
SE5534	Signetics	SE554A	
	TI	SE5534A	
SE5534A	Signetics	SE554A	
	TI	SE5534	
SE555	Exar	XR555M	
	Motorola	MC1555	
	Raytheon	RM555	
	Signetics	**SE555**	**526**
SE556	AMD	LM556	
	Exar	XR556	
		XR556M	
	Fairchild	μA556	
	Motorola	MC3456	
		MC3556	
	National	LM556	
	Raytheon	RC556	
		RM556	
	Signetics	NE556	
		SE556	**526**
	SiliconG	SG556	
	TI	NE556	
SG1524	**Exar**	**XR1524**	**3381**
	RCA	**CA1524**	**3602**
	SiliconG	SG1524	
	Sprague	ULS-8124	
	Unitrode	**UC1524**	**3709**
SG1525A	**Exar**	**XR1525A**	**3381**
	Motorola	**SG1525A**	**3533**
	SiliconG	SG1525A	
	Siliconix	**PWM25A**	**3081**
	Sprague	ULS-8125	
	Unitrode	**UC1525A**	**3709**
SG1527A	**Motorola**	**SG1527A**	**3533**
	SiliconG	SG1527A	
	Siliconix	**PWM27A**	**3081**
	Sprague	ULS-8125	
	Unitrode	**UC1527A**	**3709**
SG2524	**Exar**	**XR2524**	**3381**
	RCA	**CA2524**	**3602**
	SiliconG	SG2524	
	Sprague	ULQ-8124	
SG3524	**Exar**	**XR3524**	**3381**
	RCA	**CA3524**	**3602**
	Signetics	**SG3524**	**3661**
	SiliconG	SG3524	
	Sprague	ULN-8124	
	Unitrode	UC3524	
SG3525	SiliconG	SG3525	
	Siltronics	PWM25C	
	Sprague	ULN-8125	
	Unitrode	UC3525	
SG3525A	**Exar**	**XR3525A**	**3381**
	Motorola	**SG3525A**	**3533**

(Continued)

◆ Discontinued

Bold face device numbers indicate manufacturers data is provided in the IC Master on the pages noted.

Texas Instruments (Cont'd)

Manufacturer Device	Replacement Source	Device	IC Master Page
SG3525A	SiliconG	SG3525A	
	Siliconix	**PWM25C**	**3081**
SG3527	SiliconG	SG3527	
	Siltronics	PWM27C	
	Sprague	ULN-8127	
SG3527A	**Exar**	**XR3527A**	**3381**
	Motorola	**SG3527A**	**3533**
	SiliconG	SG3527A	
	Siliconix	**PWM27C**	**3081**
SN10102	NEC	μPB10142	
SN10140	Signetics	10140	
SN10144	Fairchild	F10144	
	Motorola	**MCM10144**	**4046**
	Signetics	10144	
SN10147	**Motorola**	**MCM10147**	**4046**
SN10148	Hitachi	HD10148	
	Motorola	**MCM10148**	**4046**
	NEC	μPB10148	
	Signetics	10148	
SN10164	Fairchild	F10164	
	Hitachi	HD10164	
	Motorola	MC10164	
	Signetics	**10164**	**858**
SN10174	Fairchild	F10174	
	Hitachi	HD10174	
	Motorola	MC10174	
	Signetics	**10174**	**858**
SN10175	Fairchild	F10175	
	Hitachi	HD10175	
	Motorola	MC10175	
	Signetics	**10175**	**858**
SN158093	Fairchild	9093	
	Motorola	MC853	
		MC953	
	National	DM9093	
	Raytheon	RM993	
	TI	SN159093	
SN158094	Fairchild	9094	
	Motorola	MC856	
		MC956	
	National	DM9094	
	Raytheon	RM9094	
		RM994	
	TI	SN159094	
SN158097	Fairchild	9097	
	Motorola	MC855	
		MC955	
	National	DM9097	
	Raytheon	RM997	
	TI	SN159097	
SN15831	Motorola	MC831	
SN15834	Motorola	MC834	
SN15851	Fairchild	951	
		9951	
	Motorola	MC851	
		MC852	
		MC951	
	Raytheon	RM951	
	TI	SN15951	
SN159093	Fairchild	9093	
	Motorola	MC853	
		MC953	
	National	DM9093	
	Raytheon	RM993	
	TI	SN158093	
SN159094	Fairchild	9094	
	Motorola	MC856	
		MC956	
	National	DM9094	
	Raytheon	RM9094	
		RM994	
	TI	SN158094	
SN159097	Fairchild	9097	
	Motorola	MC855	
		MC955	
	National	DM9097	
	Raytheon	RM997	
	TI	SN158097	
SN15931	Raytheon	RM931	
SN15934	Motorola	MC934	
	Raytheon	RM934	
SN15947	Raytheon	RM947	
SN15951	Fairchild	951	
		9951	
	Motorola	MC851	
		MC852	
		MC951	
	Raytheon	RM951	
	TI	SN15851	
SN29001	Fairchild	74H105	
		9001	
	TI	SN39001	
SN29301	Fairchild	9031	
		9301	
	National	DM8301	
		DM9301	
	Raytheon	RC8252	
		RM8252	
	Signetics	N8252	
		S8252	
	TI	SN39301	
SN29308	Fairchild	9308	
	Raytheon	RC9308	
	TI	**SN74116**	**960**
SN29309	Fairchild	9309	
	National	DM8309	
		DM9309	
	TI	SN39309	
SN29311	Fairchild	9311	
	Hitachi	HD74154	
	National	DM7213	
		DM74154	
		DM8311	
	Raytheon	RC9311	
	Signetics	**74154**	**861**
	TI	**SN74154**	**973**
SN29312	Fairchild	9312	
	National	DM8312	
	Raytheon	RC8230	
		RC9312	
	Signetics	N8230	
SN29316	Fairchild	9316	
	Raytheon	RC9316	
SN29322	National	DM8322	
	Raytheon	RC9322	
SN29334	Fairchild	9334	
	National	DM8334	
	TI	**SN74259**	**1005**
SN29764	National	LM1017	
SN39001	Fairchild	74H105	
		9001	
	TI	SN29001	
SN39301	Fairchild	9031	
		9301	
	National	DM8301	
		DM9301	
	Raytheon	RC8252	
		RM8252	
	Signetics	N8252	
		S8252	
	TI	SN29301	
SN39308	Raytheon	RM9308	
SN39309	Fairchild	9309	
	National	DM8309	
		DM9309	
	TI	SN29309	
SN39311	National	DM54154	
		DM9311	
	Raytheon	RM9311	
	Signetics	**54154**	**528,861**
	TI	**SN54154**	**973**
SN39312	National	DM9312	
	Raytheon	RM8230	
		RM9312	
SN39316	National	DM9316	
	Raytheon	RM9316	
SN39322	National	DM9322	
	Raytheon	RM9322	
SN39334	National	DM9334	
	TI	**SN54259**	**1005**
SN39602	Fairchild	9602	
	National	DM8602	
		DM9602	
	Raytheon	RF8602	
		RF9602	
SN5400	Fairchild	5400	
	National	DM5400	
	Signetics	**5400**	**528,860**
SN5401	Fairchild	5401	
	National	DM5401	
SN5402	Fairchild	5402	
	National	DM5402	
SN5403	Fairchild	5403	
	National	DM5403	
SN5404	Fairchild	5404	
		9016	
	National	DM5404	
		DM9016C	
SN5405	Fairchild	5405	
	National	DM5405	
SN5406	Fairchild	5406	
	National	DM5406	
SN5407	Fairchild	5407	
	National	DM5407	
SN5408	Fairchild	5408	
	National	DM5408	
SN5409	Fairchild	5409	
	National	DM5409	
SN5410	Fairchild	5410	
	National	DM5410	
SN54107	Fairchild	54107	
	Motorola	MC54107	
	National	DM54107	
SN54109	National	DM54109	
	Signetics	**54109**	**860**
SN5411	Fairchild	5411	
	National	DM5411	
	Signetics	**5411**	**860**
SN54116	**Signetics**	**54116**	**860**
SN5412	Fairchild	5412	
SN54121	Fairchild	54121	
		9603	
	National	DM54121	
	Signetics	**54121**	**528,860**
SN54122	Fairchild	54122	
SN54123	Fairchild	54123	
	National	DM54123	
	Signetics	**54123**	**528,861**
SN54125	Fairchild	54125	
	National	DM54125	
		DM7093	
	TI	**SN54425**	**1034**
SN54126	Fairchild	54126	
	National	DM54126	
		DM7094	
	Signetics	**54126**	**528,861**
	TI	**SN54426**	**1034**
SN5413	Fairchild	5413	
	National	DM5413	
SN54132	Fairchild	54132	
	National	DM54132	
	Signetics	**54132**	**861**
SN54136	Fairchild	54136	
SN5414	Fairchild	5414	
	National	DM5414	
	Signetics	**5414**	**860**
SN54141	Fairchild	9315	
	National	DM54141	
	Signetics	54141	
SN54145	Fairchild	54145	
	National	DM54145	
SN54147	National	DM54147	
	Signetics	**54147**	**861**
SN54148	National	DM54148	
		DM9318	
	Signetics	**54148**	**861**
SN54150	Fairchild	54150	
	National	DM54150	
SN54151	Fairchild	54151A	
	National	DM54151	
	Signetics	**54151**	**528,861**
	TI	**SN54151A**	**972**
SN54152A	Fairchild	54152A	
SN54153	Fairchild	54153	
	National	DM54153	
	Signetics	**54153**	**528,861**
SN54155	Fairchild	54155	
	National	DM54155	
SN54156	Fairchild	54156	
	National	DM54156	
SN54157	Fairchild	54157	
	National	DM54157	
	Signetics	**54157**	**528,861**
SN54159	Fairchild	54159	
SN5416	Fairchild	5416	
	National	DM5416	
SN54160	Fairchild	54160	
		9310	
	National	DM54160	
	Raytheon	RM9310	
	Signetics	**54160**	**861**
SN54161	Fairchild	54161	
	National	DM54161	
	Signetics	**54161**	**528,861**
SN54162	Fairchild	54162	
	National	DM54162	
SN54163	Fairchild	54163	
	National	DM54163	
	Signetics	**54163**	**528,861**
SN54164	Fairchild	54164	
	National	DM54164	
			(Continued)
SN54164	National	DM7570	
	Signetics	**54164**	**528,861**
SN54165	Fairchild	54165	
	National	DM54165	
		DM7590	
	Signetics	**54165**	**861**
SN54166	Fairchild	54166	
	National	DM54166	
	Signetics	**54166**	**861**
SN54167	Fairchild	54167	
SN5417	Fairchild	5417	
	National	DM5417	
SN54170	Fairchild	54170	
	National	DM54170	
SN54173	Fairchild	54173	
	National	DM54173	
		DM7551	
	Raytheon	RM8T10	
SN54174	Fairchild	54174	
	National	DM54174	
	Signetics	**54174**	**528,861**
SN54175	Fairchild	54175	
	National	DM54175	
	Signetics	**54175**	**528,861**
SN54176	Fairchild	54176	
	National	DM54176	
	Raytheon	RM8280	
	Signetics	54176	
		S8280	
SN54177	Fairchild	54177	
	National	DM54177	
		DM7281	
	Raytheon	RM8281	
	Signetics	54177	
		S7281	
		S8281	
SN54178	Fairchild	54178	
	Raytheon	RM8270	
	Signetics	S8270	
SN54179	Fairchild	54179	
	Raytheon	RM8271	
	Signetics	S8271	
SN54180	Fairchild	54180	
	National	DM54180	
	Signetics	**54180**	**528,861**
SN54181	Fairchild	54181	
	National	DM54181	
	Raytheon	RM9341	
	Signetics	**54181**	**861**
SN54182	Fairchild	54182	
	National	DM54182	
	Raytheon	RM9342	
SN54184	National	DM54184	
SN54185	National	DM54185	
SN54185A	National	DM54185A	
SN54187	National	DM54187	
SN54190	Fairchild	54190	
	National	DM54190	
	Signetics	**54190**	**861**
SN54191	Fairchild	54191	
	National	DM54191	
	Signetics	**54191**	**861**
SN54192	Fairchild	54192	
	National	DM54192	
		DM7560	
SN54193	Fairchild	54193	
	National	DM54193	
		DM7563	
SN54194	National	DM54194	
	Signetics	**54194**	**861**
SN54195	Fairchild	54195	
		9300	
	National	DM54195	
SN54196	Fairchild	54196	
	National	DM54196	
	Signetics	54196	
SN54198	Fairchild	54198	
	National	DM54198	
SN54199	Fairchild	54199	
	National	DM54199	
SN5420	Fairchild	5420	
	National	DM5420	
	Signetics	**5420**	**528,860**
SN5422	Fairchild	5422	
SN5423	Fairchild	5423	
	National	DM5423	
SN5425	Fairchild	5425	
	National	DM5425	
SN54251	National	DM54251	
		DM7121	
		SM54251	

◆ Discontinued

The manufacturers report their devices can be used as direct replacements.
Performance details often differ, so compare the specifications considering your requirements.

Texas Instruments (Cont'd)

Manufacturer Device	Replacement Source	Device	IC Master Page
SN5426	National	DM5426	
	Signetics	**5426**	**528,860**
SN5427	Fairchild	5427	
	National	DM5427	
SN54279	Fairchild	54279	
	Signetics	**54279**	**862**
SN54283	Fairchild	54283	
SN54284	National	DM7875A	
SN54285	National	DM7875B	
SN54293	Fairchild	54293	
SN54298	Fairchild	54298	
SN5430	Fairchild	5430	
	National	DM5430	
SN5432	Fairchild	5432	
	National	DM5432	
	Signetics	**5432**	**528,860**
SN54365	National	DM7095	
	Signetics	S8T95	
SN54366	National	DM7096	
SN54367	National	DM7097	
	Signetics	**S8T97**	**876**
SN54368	National	DM7098	
	Signetics	**S8T98**	**876**
SN5437	Fairchild	5437	
	National	DM5437	
SN5438	Fairchild	5438	
	National	DM5438	
SN5440	Fairchild	5440	
	National	DM5440	
SN5442	Fairchild	5442A	
	National	DM5442	
	Signetics	**5442**	**860**
SN54425	Fairchild	54125	
	National	DM54125	
		DM7093	
	TI	**SN54125**	**963**
SN54426	Fairchild	54126	
	National	DM54126	
		DM7094	
	Signetics	**54126**	**528,861**
	TI	**SN54126**	**963**
SN5443	Fairchild	5443A	
	Signetics	5443	
SN5444	Fairchild	5444A	
	TI	**SN5444A**	**934**
SN5444A	Fairchild	5444A	
	TI	SN5444	
SN5445	Fairchild	5445	
	National	DM5445	
	TI	SN5445A	
SN5446	Fairchild	5446A	
		9317B	
		9317C	
	National	DM5446	
	Signetics	5446	
	TI	**SN5446A**	**935**
SN5447	Fairchild	5447A	
	National	DM5447	
	Signetics	5447	
	TI	**SN5447A**	**935**
SN5448	Fairchild	5448	
	National	DM5448	
	TI	SN5448A	
SN5449	Fairchild	5449	
SN5450	Fairchild	5450	
	National	DM5450	
SN5451	Fairchild	5451	
	National	DM5451	
SN5453	Fairchild	5453	
	National	DM5453	
SN5454	Fairchild	5454	
	National	DM5454	
SN5460	Fairchild	5460	
	National	DM5460	
SN5470	Fairchild	5470	
	National	DM5470	
SN5472	Fairchild	5472	
	National	DM5472	
SN5473	Fairchild	5473	
	National	DM5473	
	Signetics	**5473**	**528,860**
SN5474	Fairchild	5474	
	National	DM5474	
	Signetics	**5474**	**528,860**
SN5475	Fairchild	5475	
	National	DM5475	
	Signetics	**5475**	**860**
SN5476	Fairchild	5476	
	National	DM5476	
	Signetics	**5476**	**528,860**
SN5477	Fairchild	5477	
	Signetics	5477	
SN5480	Fairchild	5480	
SN5482	Fairchild	5482	
SN54836	National	DM7283	
SN5483A	Fairchild	5483A	
	Signetics	5483A	
SN5485	Fairchild	5485	
	National	DM5485	
	Signetics	**5485**	**528,860**
SN5486	Fairchild	5486	
	National	DM5486	
	Signetics	**5486**	**860**
SN5488	Fairchild	5488	
	National	DM5488	
	Signetics	S8224	
	TI	SN5488A	
SN5489	AMD	SN5489-1	
		SN54S289	
		SN74S289	
	Fairchild	54S289	
	National	DM5489	
		DM54S289	
		MM54S289	
	Signetics	54S289	
		54S301	**532**
		S8225	
		S82S25	
	TI	SN54S289	
SN5490	Fairchild	5490	
	National	DM5490	
	TI	**SN5490A**	**952**
SN5491	Fairchild	5491A	
	National	DM5491	
	Signetics	**5491**	**860**
	TI	**SN5491A**	**952**
SN5492	Fairchild	5492	
	National	DM5492	
	TI	**SN5492A**	**952**
SN5493	Fairchild	5493A	
	National	DM5493	
	Signetics	**5493**	**528,860**
	TI	**SN5493A**	**953**
SN5494	Fairchild	5494	
	TI	SN5494A	
SN5495A	Fairchild	5495A	
	National	DM5495	
	TI	SN5495	
SN5496	Fairchild	5496	
	National	DM5496	
	Signetics	**5496**	**528,860**
SN5497	Fairchild	5497	
SN54ALS00	Motorola	SN54ALS00	
	National	DM54ALS00	
SN54ALS01	National	DM54ALS01	
SN54ALS02	Motorola	SN54ALS02	
	National	DM54ALS02	
SN54ALS03	National	DM54ALS03	
SN54ALS04	Motorola	SN54ALS04	
	National	DM54ALS04	
SN54ALS05	National	DM54ALS05	
SN54ALS08	Motorola	SN54ALS08	
	National	DM54ALS08	
SN54ALS09	Motorola	SN54ALS09	
	National	DM54ALS09	
SN54ALS10	National	DM54ALS10	
SN54ALS1000	National	DM54ALS1000	
SN54ALS1002	National	DM54ALS1002	
SN54ALS1003	National	DM54ALS1003	
SN54ALS1004	National	DM54ALS1005	
SN54ALS1008	National	DM54ALS1008	
SN54ALS1010	National	DM54ALS1010	
SN54ALS1011	National	DM54ALS1011	
SN54ALS1020	National	DM54ALS1020	
SN54ALS1032	National	DM54ALS1032	
SN54ALS1034	National	DM54ALS1034	
SN54ALS1035	National	DM54ALS1035	
SN54ALS109	National	DM54ALS109	
SN54ALS11	National	DM54ALS11	
SN54ALS112	National	DM54ALS112	
SN54ALS113	National	DM54ALS113	
SN54ALS114	National	DM54ALS114	
SN54ALS12	National	DM54ALS12	
SN54ALS1240	National	DM54ALS1240	
SN54ALS1241	National	DM54ALS1241	
SN54ALS1242	National	DM54ALS1242	
		DM54ALS1243	
	TI	**SN54ALS1243**	**1120**
SN54ALS1243	National	DM54ALS1242	
		DM54ALS1243	
	TI	**SN54ALS1242**	**1119**
SN54ALS1244	National	DM54ALS1244	
SN54ALS131	National	DM54ALS131	
SN54ALS133	National	DM54ALS133	
SN54ALS137	National	DM54ALS137	
SN54ALS138	National	DM54ALS138	
SN54ALS15	National	DM54ALS15	
SN54ALS151	National	DM54ALS151	
SN54ALS153	National	DM54ALS153	
SN54ALS157	National	DM54ALS157	
SN54ALS158	National	DM54ALS158	
SN54ALS160	**Motorola**	**SN54ALS160**	**823**
	National	DM54ALS160	
SN54ALS161	**Motorola**	**SN54ALS161**	**823**
	National	DM54ALS161	
SN54ALS162	**Motorola**	**SN54ALS162**	**823**
	National	DM54ALS162	
SN54ALS163	**Motorola**	**SN54ALS163**	**823**
	National	DM54ALS163	
SN54ALS168	National	DM54ALS168	
SN54ALS169	National	DM54ALS169	
SN54ALS174	National	DM54ALS174	
SN54ALS175	National	DM54ALS175	
SN54ALS20	National	DM54ALS20	
SN54ALS21	National	DM54ALS21	
SN54ALS22	National	DM54ALS22	
SN54ALS240	**Motorola**	**SN54ALS240**	**823**
	National	DM54ALS240	
SN54ALS241	**Motorola**	**SN54ALS241**	**823**
	National	DM54ALS241	
SN54ALS242	**Motorola**	**SN54ALS242**	**823**
	National	DM54ALS242	
SN54ALS243	**Motorola**	**SN54ALS243**	**823**
	National	DM54ALS243	
SN54ALS244	**Motorola**	**SN54ALS244**	**823**
	National	DM54ALS244	
SN54ALS245	**Motorola**	**SN54ALS245**	**823**
	National	DM54ALS245	
SN54ALS251	National	DM54ALS251	
SN54ALS253	National	DM54ALS253	
SN54ALS257	National	DM54ALS257	
SN54ALS258	National	DM54ALS258	
SN54ALS27	National	DM54ALS27	
SN54ALS273	**Motorola**	**SN54ALS273**	**823**
	National	DM54ALS273	
SN54ALS28	National	DM54ALS28	
SN54ALS32	**Motorola**	**SN54ALS32**	**822**
	National	DM54ALS32	
SN54ALS33	National	DM54ALS33	
SN54ALS352	National	DM54ALS352	
SN54ALS37	National	DM54ALS37	
SN54ALS373	**Motorola**	**SN54ALS373**	**823**
	National	DM54ALS373	
SN54ALS374	**Motorola**	**SN54ALS374**	**823**
	National	DM54ALS374	
SN54ALS38	National	DM54ALS38	
SN54ALS40	National	DM54ALS40	
SN54ALS518	National	DM54ALS518	
SN54ALS519	National	DM54ALS519	
SN54ALS520	National	DM54ALS520	
SN54ALS521	National	DM54ALS521	
SN54ALS522	National	DM54ALS522	
SN54ALS533	National	DM54ALS533	
SN54ALS534	National	DM54ALS534	
SN54ALS563	National	DM54ALS563	
SN54ALS564	National	DM54ALS564	
SN54ALS573	**Motorola**	**SN54ALS573**	**823**
	National	DM54ALS573	
SN54ALS574	**Motorola**	**SN54ALS574**	**823**
	National	DM54ALS574	
SN54ALS576	**Motorola**	**SN54ALS576**	**823**
	National	DM54ALS576	
SN54ALS580	**Motorola**	**SN54ALS580**	**823**
	National	DM54ALS580	
SN54ALS620	**Motorola**	**SN54ALS620**	**823**
	National	DM54ALS620	
SN54ALS621	**Motorola**	**SN54ALS621**	**823**
	National	DM54ALS621	
SN54ALS623	**Motorola**	**SN54ALS623**	**823**
	National	DM54ALS623	
SN54ALS640	**Motorola**	**SN54ALS640**	**823**
	National	DM54ALS640	
SN54ALS641	**Motorola**	**SN54ALS641**	**823**
	National	DM54ALS641	
SN54ALS642	**Motorola**	**SN54ALS642**	**823**
	National	DM54ALS642	
SN54ALS643	**Motorola**	**SN54ALS643**	**823**
	National	DM54ALS643	
SN54ALS644	**Motorola**	**SN54ALS644**	**823**
	National	DM54ALS644	
SN54ALS645	National	DM54ALS645	
SN54ALS689	National	DM54ALS689	
SN54ALS74	**Motorola**	**SN54ALS74**	**823**
	National	DM54ALS74	
SN54ALS804	National	DM54ALS804	
SN54ALS805	National	DM54ALS805	
SN54ALS808	National	DM54ALS808	
SN54ALS832	National	DM54ALS832	
SN54ALS873	**Motorola**	**SN54ALS873**	**823**
	National	DM54ALS873	
SN54ALS874	**Motorola**	**SN54ALS874**	**823**
	National	DM54ALS874	
SN54ALS876	**Motorola**	**SN54ALS876**	**823**
	National	DM54ALS876	
SN54ALS880	**Motorola**	**SN54ALS880**	**823**
	National	DM54ALS880	
SN54AS00	National	DM54AS00	
SN54AS02	National	DM54AS02	
SN54AS04	National	DM54AS04	
SN54AS08	National	DM54AS08	
SN54AS10	National	DM54AS10	
SN54AS109	National	DM54AS109	
SN54AS11	National	DM54AS11	
SN54AS112	National	DM54AS112	
SN54AS113	National	DM54AS113	
SN54AS114	National	DM54AS114	
SN54AS151	National	DM54AS151	
SN54AS152	National	DM54AS152	
SN54AS153	National	DM54AS153	
SN54AS157	National	DM54AS157	
SN54AS158	National	DM54AS158	
SN54AS160	National	DM54AS160	
SN54AS161	National	DM54AS161	
SN54AS162	National	DM54AS162	
SN54AS163	National	DM54AS163	
SN54AS168	National	DM54AS168	
SN54AS169	National	DM54AS169	
SN54AS174	National	DM54AS174	
SN54AS175	National	DM54AS175	
SN54AS181	National	DM54AS181	
SN54AS20	National	DM54AS20	
SN54AS21	National	DM54AS21	
SN54AS230	National	DM54AS230	
SN54AS231	National	DM54AS231	
SN54AS240	National	DM54AS240	
SN54AS241	National	DM54AS241	
SN54AS242	National	DM54AS242	
SN54AS243	National	DM54AS243	
SN54AS244	National	DM54AS244	
SN54AS251	National	DM54AS251	
SN54AS253	National	DM54AS253	
SN54AS257	National	DM54AS257	
SN54AS258	National	DM54AS258	
SN54AS27	National	DM54AS27	
SN54AS280	National	DM54AS280	
SN54AS30	National	DM54AS30	
SN54AS32	National	DM54AS32	
SN54AS34	National	DM54AS34	
SN54AS352	National	DM54AS352	
SN54AS353	National	DM54AS353	
SN54AS373	National	DM54AS373	
SN54AS374	National	DM54AS374	
SN54AS533	National	DM54AS533	
SN54AS534	National	DM54AS534	
SN54AS640	National	DM54AS640	
SN54AS641	National	DM54AS641	
SN54AS642	National	DM54AS642	
SN54AS643	National	DM54AS643	
SN54AS644	National	DM54AS644	
SN54AS645	National	DM54AS645	
SN54AS646	National	DM54AS646	
SN54AS648	National	DM54AS648	
SN54AS651	National	DM54AS651	
SN54AS652	National	DM54AS652	
SN54AS74	National	DM54AS74	
SN54H00	Fairchild	54H00	
	National	DM54H00	
SN54H01	Fairchild	54H01	
	National	DM54H01	
SN54H04	Fairchild	54H04	
	National	DM54H04	
SN54H05	Fairchild	54H05	
	National	DM54H05	
SN54H10	Fairchild	54H10	
	National	DM54H10	
SN54H101	Fairchild	54H101	
SN54H102	Fairchild	54H102	
SN54H103	Fairchild	54H103	
	National	DM54H103	
SN54H106	Fairchild	54H106	
	National	DM54H106	
SN54H108	Fairchild	54H108	
	National	DM54H108	
SN54H11	Fairchild	54H11	
	Motorola	MC3106	
	National	DM54H11	

◆ Discontinued

Bold face device numbers indicate manufacturers data is provided in the IC Master on the pages noted.

© IC MASTER 1984

Texas Instruments (Cont'd)

Manufacturer Device	Replacement Source	Device	IC Master Page
SN54H183	Fairchild	54H183	
		934183	
SN54H20	Fairchild	54H20	
	National	DM54H20	
SN54H21	Fairchild	54H21	
	National	DM54H21	
SN54H22	Fairchild	54H22	
	National	DM54H22	
SN54H30	Fairchild	54H30	
	National	DM54H30	
SN54H40	Fairchild	54H40	
	National	DM54H40	
SN54H50	Fairchild	54H50	
	National	DM54H50	
SN54H51	Fairchild	54H51	
	National	DM54H51	
SN54H52	Fairchild	54H52	
	National	DM54H52	
SN54H53	Fairchild	54H53	
	National	DM54H53	
SN54H54	Fairchild	54H54	
	National	DM54H54	
SN54H55	Fairchild	54H55	
	National	DM54H55	
SN54H60	Fairchild	54H60	
	National	DM54H60	
SN54H61	Fairchild	54H61	
	National	DM54H61	
SN54H62	Fairchild	54H62	
	National	DM54H62	
SN54H71	Fairchild	54H71	
	National	DM54H71	
SN54H72	Fairchild	54H72	
	National	DM54H72	
SN54H74	Fairchild	54H74	
	National	DM54H74	
SN54H76	Fairchild	54H76	
	National	DM54H76	
SN54H78	Fairchild	54H78	
	National	DM54H78	
SN54H87	Fairchild	54H87	
SN54L01	National	DM54L01	
SN54L02	National	DM54L02	
SN54L03	National	DM54L03	
SN54L10	National	DM54L10	
SN54L157	National	DM71L22	
SN54L164	National	DM54L164	
		DM76L70	
SN54L192	National	DM54L192	
		DM75L60	
SN54L193	National	DM54L193	
		DM75L63	
SN54L20	National	DM54L20	
SN54L30	National	DM54L30	
SN54L42A	National	DM54L42A	
SN54L51	National	DM54L51	
SN54L55	National	DM54L55	
SN54L71	National	DM54L71	
SN54L72	National	DM54L72	
SN54L73	National	DM54L73	
SN54L74	National	DM54L74	
SN54L75	National	DM54L75	
SN54L78	National	DM54L78	
SN54L85	National	DM54L85	
SN54L86	National	DM54L86	
SN54L90	National	DM54L90	
SN54L93	National	DM54L93	
SN54L95	National	DM54L95	
SN54L98	National	DM54L98	
SN54LS00	Fairchild	54LS00	
	Motorola	**SN54LS00**	**822**
	National	DM54LS00	
	Signetics	**54LS00**	**529**
SN54LS01	Fairchild	54LS01	
	Motorola	**SN54LS01**	**822**
	National	DM54LS01	
SN54LS02	Fairchild	54LS02	
	Motorola	**SN54LS02**	**822**
	National	DM54LS02	
	Signetics	**54LS02**	**529**
SN54LS03	Fairchild	54LS03	
	Motorola	**SN54LS03**	**822**
	National	DM54LS03	
SN54LS04	Fairchild	54LS04	
	Motorola	**SN54LS04**	**822**
	National	DM54LS04	
	Signetics	**54LS04**	**529**
SN54LS05	Fairchild	54LS05	
	Motorola	**SN54LS05**	**822**
	National	DM54LS05	
SN54LS08	Fairchild	54LS08	
	Motorola	**SN54LS08**	**822**
	National	DM54LS08	
	Signetics	**54LS08**	**529**
SN54LS09	Fairchild	54LS09	
	Motorola	**SN54LS09**	**822**
	National	DM54LS09	
SN54LS10	Fairchild	54LS10	
	Motorola	**SN54LS10**	**822**
	National	DM54LS10	
	Signetics	**54LS10**	**529**
SN54LS107	Motorola	SN54LS107A	
	National	DM54LS107A	
	TI	**SN54LS107A**	**957**
SN54LS107A	Motorola	SN54LS107A	
	National	DM54LS107A	
	TI	SN54LS107	
SN54LS109	Fairchild	54LS109	
	Motorola	SN54LS109A	
	National	DM54LS109	
		DM54LS109A	
	Signetics	54LS109	
	TI	**SN54LS109A**	**958**
SN54LS109A	Fairchild	54LS109	
	Motorola	SN54LS109A	
	National	DM54LS109	
		DM54LS109A	
	Signetics	54LS109	
	TI	SN54LS109	
SN54LS11	Fairchild	54LS11	
	Motorola	**SN54LS11**	**822**
	National	DM54LS11	
SN54LS112	Fairchild	54LS112	
	Motorola	SN54LS112A	
	National	DM54LS112	
	Signetics	54LS112	
	TI	**SN54LS112A**	**959**
SN54LS112A	Fairchild	54LS112	
	Motorola	SN54LS112A	
	National	DM54LS112	
	Signetics	54LS112	
	TI	SN54LS112	
SN54LS113	Fairchild	54LS113	
	Motorola	SN54LS113A	
	National	DM54LS113	
	Signetics	54LS113	
	TI	SN54LS113A	
SN54LS113A	Fairchild	54LS113	
	Motorola	SN54LS113A	
	National	DM54LS113	
	Signetics	54LS113	
	TI	SN54LS113	
SN54LS114	Fairchild	54LS114	
	Motorola	SN54LS114A	
	National	DM54LS114	
		DM54LS114A	
	TI	**SN54LS114A**	**960**
SN54LS114A	Fairchild	54LS114	
	Motorola	SN54LS114A	
	National	DM54LS114	
		DM54LS114A	
	TI	SN54LS114	
SN54LS12	Motorola	SN54LS12	
	National	DM54LS12	
SN54LS122	Motorola	SN54LS122	
	National	DM54LS122	
SN54LS123	Motorola	SN54LS123	
	National	DM54LS123	
SN54LS125A	Motorola	SN54LS125A	
	National	DM54LS125	
	Signetics	54LS125A	
SN54LS126	Fairchild	54LS126	
	Motorola	SN54LS126A	
	National	DM54LS126	
	Signetics	54LS126A	
	TI	**SN54LS126A**	**962**
SN54LS126A	Fairchild	54LS126	
	Motorola	SN54LS126A	
	National	DM54LS126	
	Signetics	54LS126A	
	TI	SN54LS126	
SN54LS13	Fairchild	54LS13	
	Motorola	SN54LS13	
	National	DM54LS13	
	TI	SN54S13	
SN54LS132	Motorola	SN54LS132	
	National	DM54LS132	
	Signetics	**54LS132**	**529**
SN54LS136	Fairchild	54LS136	
	Motorola	SN54LS136	
	National	DM54LS136	
	Signetics	54LS136	
SN54LS137	Motorola	SN54LS137	
SN54LS138	Fairchild	54LS138	
	Motorola	SN54LS138	
	National	DM54LS138	
	Signetics	**54LS138**	**529**
SN54LS139	Fairchild	54LS139	
	Motorola	SN54LS139	
	National	DM54LS139	
	Signetics	**54LS139**	**529**
SN54LS14	Fairchild	54LS14	
	Motorola	SN54LS14	
	National	DM54LS14	
	Signetics	**54LS14**	**529**
SN54LS145	Fairchild	54LS145	
	Motorola	SN54LS145	
SN54LS147	Motorola	SN54LS147	
SN54LS148	Motorola	SN54LS148	
SN54LS15	Fairchild	54LS15	
	Motorola	SN54LS15	
	National	DM54LS15	
SN54LS151	Fairchild	54LS151	
	Motorola	SN54LS151	
	National	DM54LS151	
	Signetics	54LS151	
SN54LS152	Fairchild	54LS152	
SN54LS153	Fairchild	54LS153	
	Motorola	SN54LS153	
	National	DM54LS153	
	Signetics	**54LS153**	**529**
SN54LS155	Fairchild	54LS155	
	Motorola	SN54LS155	
	National	DM54LS155	
SN54LS156	Fairchild	54LS156	
	Motorola	SN54LS156	
	National	DM54LS156	
SN54LS157	Fairchild	54LS157	
	Motorola	SN54LS157	
	National	DM54LS157	
	Signetics	**54LS157**	**529**
SN54LS158	Fairchild	54LS158	
	Motorola	SN54LS158	
	National	DM54LS158	
	Signetics	54LS158	
SN54LS160	National	DM54LS160A	
SN54LS160A	Motorola	SN54LS160A	
	Signetics	54LS160A	
SN54LS161A	Fairchild	54LS161A	
	Motorola	SN54LS161A	
	National	DM54LS161A	
	Signetics	**54LS161A**	**529**
SN54LS162A	Motorola	SN54LS162A	
	National	DM54LS162A	
	Signetics	54LS162A	
SN54LS163	National	DM54LS163	
SN54LS163A	Motorola	SN54LS163A	
	National	DM54LS163A	
	Signetics	**54LS163A**	**529**
SN54LS164	Fairchild	54LS164	
	Motorola	SN54LS164	
	National	DM54LS164	
	Signetics	**54LS164**	**529**
SN54LS164A	Motorola	SN54LS164A	
	National	DM54LS164A	
SN54LS165	Fairchild	54LS165	
	Motorola	SN54LS165	
SN54LS166	Motorola	SN54LS166	
SN54LS168	Fairchild	54LS168	
	Motorola	SN54LS168	
	National	DM54LS168	
SN54LS169	Fairchild	54LS169	
	Motorola	SN54LS169	
	National	DM54LS169	
SN54LS170	Fairchild	54LS170	
	Motorola	SN54LS170	
	National	DM54LS170	
SN54LS173A	Fairchild	54LS173	
	Motorola	SN54LS173A	
	National	DM54LS173	
	Signetics	54LS173	
SN54LS174	Fairchild	54LS174	
	Motorola	SN54LS174	
	National	DM54LS174	
	Signetics	**54LS174**	**529**
SN54LS175	Fairchild	54LS175	
	Motorola	SN54LS175	
	National	DM54LS175	
	Signetics	**54LS175**	**529**
SN54LS181	Fairchild	54LS181	
	Motorola	SN54LS181	
	Signetics	54LS181	
SN54LS182	Motorola	SN54LS182	
SN54LS189	Fairchild	54LS189	
	National	DM54LS189	
	TI	**SN54LS189A**	**988**
SN54LS189A	Fairchild	54LS189	
	National	DM54LS189	
	TI	SN54LS189	
SN54LS190	Motorola	SN54LS190	
	National	DM54LS190	
	Signetics	**54LS190**	**529**
SN54LS191	Motorola	SN54LS191	
	National	DM54LS191	
	Signetics	**54LS191**	**529**
SN54LS192	Fairchild	54LS192	
	Motorola	SN54LS192	
	National	DM54LS192	
	Raytheon	54LS192	
	Signetics	**54LS192**	**530**
SN54LS193	Fairchild	54LS193	
	Motorola	SN54LS193	
	National	DM54LS193	
	Signetics	**54LS193**	**530**
SN54LS194A	Fairchild	54LS194A	
	Motorola	SN54LS194A	
SN54LS195A	Fairchild	54LS195A	
	Motorola	SN54LS195A	
	Signetics	**54LS195A**	**530**
SN54LS196	Motorola	SN54LS196	
	National	DM54LS196	
SN54LS197	Motorola	SN54LS197	
	National	DM54LS197	
	Signetics	**54LS197**	**530**
SN54LS20	Fairchild	54LS20	
	Motorola	SN54LS20	
	National	DM54LS20	
	Signetics	**54LS20**	**529**
SN54LS21	Fairchild	54LS21	
	Motorola	SN54LS21	
	National	DM54LS21	
SN54LS22	Fairchild	54LS22	
	Motorola	SN54LS22	
	National	DM54LS22	
SN54LS221	Motorola	SN54LS221	
	National	DM54LS221	
	Signetics	**54LS221**	
SN54LS240	Fairchild	54LS240	
	MMI	**SN54LS240**	**804**
	Motorola	SN54LS240	
SN54LS241	Fairchild	54LS241	
	MMI	**SN54LS241**	**804**
	Motorola	SN54LS241	
SN54LS242	Motorola	SN54LS242	
SN54LS243	Motorola	SN54LS243	
SN54LS244	Fairchild	54LS244	
	MMI	**SN54LS244**	**804**
	Motorola	SN54LS244	
SN54LS245	Fairchild	54LS245	
	MMI	**SN54LS245**	**804**
	Motorola	SN54LS245	
	National	DM54LS245	
	Signetics	**54LS245**	**530**
SN54LS247	Fairchild	54LS247	
	Motorola	SN54LS247	
	National	DM54LS247	
SN54LS248	Fairchild	54LS248	
	Motorola	SN54LS248	
	National	DM54LS248	
	Signetics	54LS248	
SN54LS249	Fairchild	54LS249	
	Motorola	SN54LS249	
	National	DM54LS249	
SN54LS251	Fairchild	54LS251	
	Motorola	SN54LS251	
	Signetics	54LS251	
SN54LS253	Fairchild	54LS253	
	Motorola	SN54LS253	
	National	DM54LS253	
		DM7214	
	Signetics	54LS253	
SN54LS257	National	DM54LS257	
	Signetics	54LS257	
SN54LS257A	Motorola	SN54LS257A	
SN54LS258	National	DM54LS258	
	Signetics	54LS258	
SN54LS258A	Fairchild	54LS258A	
	Motorola	SN54LS258A	
SN54LS259	Fairchild	54LS259	
	Motorola	SN54LS259	
SN54LS26	Fairchild	54LS26	
	Motorola	SN54LS26	
	National	DM54LS26	
SN54LS265A	Fairchild	54LS365A	
	Motorola	SN54LS365A	

(Continued)

◆ Discontinued

The manufacturers report their devices can be used as direct replacements.
Performance details often differ, so compare the specifications considering your requirements.

Texas Instruments (Cont'd)

Manufacturer Device	Replacement Source	Device	IC Master Page
SN54LS265A	Signetics	54LS365	
		54LS365A	**530**
	TI	**SN54LS365A**	**1023**
SN54LS266	Fairchild	54LS266	
		9386	
	Motorola	SN54LS266	
	National	DM54LS266	
	Signetics	**54LS266**	**530**
SN54LS27	Fairchild	54LS27	
	Motorola	SN54LS27	
	National	DM54LS27	
SN54LS273	AMD	AM25LS273M	
	Fairchild	54LS273	
	MMI	**SN54LS273**	**804**
	Motorola	SN54LS273	
	Signetics	**54LS273**	**530**
SN54LS279	Fairchild	54LS279	
	Motorola	SN54LS279	
	National	DM54LS279	
	Signetics	54LS279	
SN54LS28	Fairchild	54LS28	
	Motorola	SN54LS28	
	Signetics	**54LS194A**	**530**
		54LS28	
SN54LS280	Motorola	SN54LS280	
SN54LS283	Fairchild	54LS283	
	~~Motorola~~	~~SN54LS283~~	
	National	DM54LS283	
	Signetics	54LS283	
SN54LS289	Fairchild	54LS289	
	National	DM54LS289	
	TI	**SN54LS289A**	**1012**
SN54LS289A	Fairchild	54LS289	
	National	DM54LS289	
	TI	SN54LS289	
SN54LS290	Motorola	SN54LS290	
	National	DM54LS290	
	Signetics	**54LS290**	**530**
SN54LS293	Fairchild	54LS293	
	Motorola	SN54LS293	
	National	DM54LS293	
	Signetics	**54LS293**	**530**
SN54LS295B	Motorola	SN54LS295A	
SN54LS298	AMD	SN54LS298	
	Fairchild	54LS298	
	Motorola	SN54LS298	
SN54LS299	AMD	SN54LS299	
	Fairchild	54LS299	
	MMI	54LS299	
	Motorola	SN54LS299	
SN54LS30	Fairchild	54LS30	
	Motorola	SN54LS30	
	National	DM54LS30	
	Signetics	54LS30	
SN54LS32	Fairchild	54LS32	
	National	DM54LS32	
	Signetics	**54LS32**	**529**
SN54LS322	AMD	SN54LS322	
	Motorola	SN54LS322	
SN54LS323	AMD	SN74LS323	
	Fairchild	74LS323	
	Motorola	SN74LS323	
	TI	**SN74LS323**	**1018**
SN54LS323A	AMD	SN54LS323	
	Fairchild	54LS323	
	Motorola	SN54LS323	
SN54LS33	Fairchild	54LS33	
	Motorola	SN54LS33	
SN54LS347	Fairchild	54LS347	
SN54LS352	Fairchild	54LS352	
	Motorola	SN54LS352	
	National	DM54LS352	
SN54LS353	Fairchild	54LS353	
	Motorola	SN54LS353	
	National	DM54LS353	
SN54LS365A	Fairchild	54LS365A	
	Motorola	SN54LS365A	
	Signetics	54LS365	
		54LS365A	**530**
	TI	SN54LS265A	
~~SN54LS366A~~	~~Fairchild~~	~~54LS366A~~	
	Motorola	SN54LS366A	
	National	DM54LS366	
	Signetics	54LS366A	
SN54LS367A	Fairchild	54LS367A	
	Motorola	SN54LS367A	
	National	DM54LS367	
	Signetics	54LS367	
		54LS367A	**530**
SN54LS368A	Fairchild	54LS368A	
	Motorola	SN54LS368A	
	National	DM54LS368	
	Signetics	54LS368	
		54LS368A	**530**
SN54LS37	Fairchild	54LS37	
	Motorola	SN54LS37	
	National	DM54LS37	
	Signetics	**54LS37**	**529**
SN54LS373	**MMI**	**SN54LS373**	**804**
	Motorola	SN54LS373	
	Signetics	**54LS373**	**530**
SN54LS374	**MMI**	**SN54LS374**	**804**
	Motorola	SN54LS374	
	National	DM54LS374	
SN54LS375	Fairchild	54LS375	
	Motorola	SN54LS375	
	Signetics	**54LS375**	**530**
SN54LS377	AMD	AM25LS377M	
	Fairchild	54LS377	
	MMI	**SN54LS377**	**804**
	Motorola	SN54LS377	
	Signetics	**54LS377**	**530**
SN54LS378	AMD	SN54LS378	
	Fairchild	54LS378	
	Motorola	SN54LS378	
SN54LS379	AMD	SN54LS379	
	Fairchild	54LS379	
	Motorola	SN54LS379	
SN54LS38	Fairchild	54LS38	
	Motorola	SN54LS38	
	National	DM54LS38	
SN54LS381	AMD	SN54LS381	
SN54LS384	AMD	SN54LS384	
SN54LS385	AMD	SN54LS385	
	Motorola	SN54LS385	
SN54LS386	Motorola	SN54LS386	
	National	DM54LS386	
	Raytheon	RM8241	
	Signetics	S82S41	
SN54LS390	Fairchild	54LS390	
	Motorola	SN54LS390	
SN54LS393	Fairchild	54LS393	
	Motorola	SN54LS393	
SN54LS395	Motorola	SN54LS395	
	National	DM54LS395	
	Signetics	54LS395	
	TI	**SN54LS395A**	**1031**
SN54LS395A	Motorola	SN54LS395	
	National	DM54LS395	
	Signetics	54LS395	
	TI	SN54LS395	
SN54LS398	Motorola	SN54LS398	
SN54LS399	AMD	SN54LS399	
	Fairchild	54LS399	
	Motorola	SN54LS399	
SN54LS40	Fairchild	54LS40	
	Motorola	SN54LS40	
	National	DM54LS40	
SN54LS42	Fairchild	54LS42	
	Motorola	SN54LS42	
	National	DM54LS42	
	Signetics	**54LS42**	**529**
SN54LS424	AMD	SN54LS424	
SN54LS47	Fairchild	54LS47	
	Motorola	SN54LS47	
	National	DM54LS47	
SN54LS48	Fairchild	54LS48	
	Motorola	SN54LS48	
	National	DM54LS48	
SN54LS49	Fairchild	54LS49	
	Motorola	SN54LS49	
	National	DM54LS49	
SN54LS490	Fairchild	54LS490	
	Motorola	SN54LS490	
SN54LS51	Fairchild	54LS51	
	Motorola	SN54LS51	
	National	DM54LS51	
	Signetics	54LS51	
SN54LS54	Fairchild	54LS54	
	Motorola	SN54LS54	
	National	DM54LS54	
SN54LS540	Motorola	SN54LS540	
SN54LS55	~~Fairchild~~	~~54LS55~~	
	Motorola	SN54LS55	
	National	DM54LS55	
SN54LS604	Motorola	SN54LS604	
SN54LS605	Motorola	SN54LS605	
SN54LS606	Motorola	SN54LS606	
SN54LS607	Motorola	SN54LS607	
SN54LS620	Motorola	SN54LS620	
SN54LS621	Motorola	SN54LS621	
SN54LS622	Motorola	SN54LS622	
SN54LS623	Motorola	SN54LS623	
SN54LS640	Motorola	SN54LS640	
SN54LS641	Motorola	SN54LS641	
SN54LS642	Motorola	SN54LS642	
SN54LS644	Motorola	SN54LS644	
SN54LS645	**MMI**	**SN54LS645**	**804**
	Motorola	SN54LS645	
SN54LS645-1	MMI	54LS645-1	
	Signetics	SN54LS645-1	
SN54LS668	Motorola	SN54LS668	
SN54LS669	Motorola	SN54LS669	
SN54LS670	Fairchild	54LS670	
	Motorola	SN54LS670	
	National	DM54LS670	
	Signetics	**54LS670**	**530**
SN54LS673	Motorola	SN54LS673	
SN54LS674	Motorola	SN54LS674	
SN54LS73	Motorola	SN54LS73A	
	National	DM54LS73	
		DM54LS73A	
	Signetics	**54LS73**	**529**
	TI	**SN54LS73A**	**944**
SN54LS73A	Motorola	SN54LS73A	
	National	DM54LS73	
		DM54LS73A	
	Signetics	**54LS73**	**529**
	TI	SN54LS73	
SN54LS74	Fairchild	54LS74	
	Motorola	SN54LS74A	
	National	DM54LS74	
		DM54LS74A	
	Signetics	54LS74	
	TI	**SN54LS74A**	**945,946**
SN54LS74A	Fairchild	54LS74	
	Motorola	SN54LS74A	
	National	DM54LS74	
		DM54LS74A	
	Signetics	54LS74	
	TI	SN54LS74	
SN54LS75	Motorola	SN54LS75	
	National	DM54LS75	
	Signetics	**54LS75**	**529**
SN54LS76	Motorola	SN54LS76A	
	National	DM54LS76	
	Signetics	54LS76	
	TI	**SN54LS76A**	**946**
SN54LS76A	Motorola	SN54LS76A	
	National	DM54LS76	
	Signetics	54LS76	
	TI	SN54LS76	
SN54LS77	Motorola	SN54LS77	
	National	DM54LS77	
SN54LS78	Motorola	SN54LS78A	
	National	DM54LS78	
	TI	**SN54LS78A**	**947**
SN54LS78A	Motorola	SN54LS78A	
	National	DM54LS78	
	TI	SN54LS78	
SN54LS795	Motorola	SN54LS795	
SN54LS796	Motorola	SN54LS796	
SN54LS83A	Fairchild	54LS83A	
	Motorola	SN54LS83A	
	National	DM54LS83A	
	Signetics	54LS83	
		54LS83A	
SN54LS85	Fairchild	54LS85	
	Motorola	SN54LS85	
	National	DM54LS85	
	Signetics	**54LS85**	**529**
SN54LS86	Motorola	SN54LS86	
	National	DM54LS86	
	Signetics	**54LS86**	**529**
SN54LS90	Motorola	SN54LS90	
	National	DM54LS90	
	Signetics	**54LS90**	**529**
SN54LS91	Motorola	SN54LS91	
SN54LS92	Motorola	SN54LS92	
	National	DM54LS92	
	Signetics	54LS92	
SN54LS93	Fairchild	54LS93	
	Motorola	SN54LS93	
	National	DM54LS93	
	~~Signetics~~	~~54LS93~~	~~529~~
~~SN54LS95B~~	~~Fairchild~~	~~54LS95B~~	
	Motorola	SN54LS95B	
	National	DM54LS95B	
	Signetics	**54LS95B**	**529**
SN54LS96	**Signetics**	**54LS96**	**529**
SN54PL16L8	AMD	AMPAL16L8	
	Harris	HPL77209/16L8	
		(Continued)	
SN54PL16L8	MMI	PAL16L8	
	National	DMPAL16L8	
SN54PL16R4	AMD	AMPAL16R4	
	Harris	HPL77210/16R4	
	MMI	PAL16R4	
	National	DMPAL16R4	
SN54PL16R6	AMD	AMPAL16R6	
	Harris	HPL77211/16R6	
	MMI	PAL16R6	
	National	DMPAL16R6	
SN54PL16R8	AMD	AMPAL16R8	
	Harris	HPL77212/16R8	
	MMI	PAL16R8	
	National	DMPAL16R8	
SN54S00	Fairchild	54S00	
	Signetics	**54S00**	**531**
SN54S02	Fairchild	54S02	
	Signetics	**54S02**	**531**
SN54S04	**Signetics**	**54S04**	**531**
SN54S05	Fairchild	54S05A	
SN54S08	Fairchild	54S08	
	Signetics	**54S08**	**531**
SN54S09	Fairchild	54S09	
SN54S10	Fairchild	54S10	
SN54S11	Fairchild	54S11	
	Signetics	**54S11**	**531**
SN54S112	Fairchild	54S112	
SN54S113	Fairchild	54S113	
~~SN54S114~~	~~Fairchild~~	~~54S114~~	
SN54S13	Fairchild	54LS13	
	Motorola	SN54LS13	
	National	DM54LS13	
	TI	**SN54LS13**	**924**
SN54S132	Fairchild	54S132	
SN54S133	Fairchild	54S133	
SN54S134	Fairchild	54S134	
SN54S135	Fairchild	54S135	
SN54S138	AMD	SN54S138	
	Fairchild	54S138	
SN54S139	AMD	SN54S139	
	Fairchild	54S139	
	Signetics	54S139	
SN54S140	Fairchild	54S140	
	National	DM54S140	
	Signetics	**54S140**	**531**
SN54S15	Fairchild	54S15	
SN54S151	AMD	SN54S151	
	Fairchild	54S151	
	Signetics	**54S151**	**531**
SN54S153	AMD	SN54S153	
	Fairchild	54S153	
	Signetics	**54S153**	**531**
SN54S157	AMD	SN54S157	
	Fairchild	54S157	
	Signetics	**54S157**	**531**
SN54S158	AMD	SN54S158	
	Fairchild	54S158	
	Signetics	**54S158**	**531**
SN54S174	AMD	SN54S174	
	Fairchild	54S174	
SN54S175	AMD	SN54S175	
	Fairchild	54S175	
		93S411	
SN54S181	AMD	SN54S181	
	Fairchild	93S41M	
	Signetics	**54S181**	**531**
SN54S182	Fairchild	54S182	
		93S42	
	MMI	**SN54S182**	**819**
SN54S189	AMD	SN54S189	
	Fairchild	54S189	
	National	DM54S189	
	Signetics	**54S189**	**532**
SN54S194	AMD	SN54S194	
	Fairchild	54S194	
SN54S20	Fairchild	54S20	
SN54S201	National	DM54S200	
	Signetics	54S200	
		54S201	
		S82S116	
		S82S16	**532**
SN54S22	Fairchild	54S22	
	~~National~~	~~DM54S22~~	
SN54S240	AMD	SN54S240	
	MMI	SNS240	
SN54S241	AMD	SN54S241	
	MMI	**SN54S241**	**804**
SN54S244	AMD	SN54S244	
	MMI	**SN54S244**	**804**
SN54S251	AMD	SN54S251	
	Signetics	54S251	

◆ Discontinued

Bold face device numbers indicate manufacturers data is provided in the IC Master on the pages noted.

© IC MASTER 1984

Texas Instruments (Cont'd)

Manufacturer Device	Replacement Source	Device	IC Master Page
SN54S257	AMD	SN54S257	
	Signetics	54S257	
SN54S258	AMD	SN54S258	
	Fairchild	54S258	
	Signetics	54S258	
SN54S260	Fairchild	54S260	
	Signetics	54S260	
SN54S283	MMI	54S283	
SN54S289	AMD	SN5489-1	
		SN54S289	
		SN74S289	
	Fairchild	54S289	
	National	DM5489	
		DM54S289	
		MM54S289	
	Signetics	54S289	
		54S301	**532**
		S8225	
		S82S25	
	TI	SN5489	
SN54S30	Fairchild	54S30	
SN54S301	National	S82S117	
		S82S17	
	Signetics	S82S17	
SN54S314	AMD	AM93415	
	AMI	4015	
	Fairchild	93415	
	Fujitsu	MBM93415	
	Hitachi	HM2510	
		HM2511	
	Intel	2115A	
	Motorola	MCM2115	
	Signetics	N82S10	
		S82S10	
	TI	SN74S314	
SN54S32	Fairchild	54S32	
SN54S37	Signetics	54S37	
SN54S373	**MMI**	**SN54S373**	**804**
SN54S374	**MMI**	**SN54S374**	**804**
SN54S381	**MMI**	**SN54S381**	**819**
SN54S40	Fairchild	54S40	
SN54S454	Fujitsu	MB7128E-W	
	Harris	**HM7685-2**	**3950**
	MMI	5389	
		5389-1	
	National	**DM77S185**	**4057**
	Raytheon	29651AM	
	Signetics	S82HS185	
		S82S185	**532**
	TI	**TBP24S81M**	
			542,4239
SN54S51	Fairchild	54S51	
SN54S64	Fairchild	54S64	
SN54S74	Fairchild	54S74	
SN54S85	**Signetics**	**54S85**	**531**
SN54S86	Fairchild	54S86	
	Signetics	**54S86**	**531**
SN55107	Fairchild	55107	
	Motorola	MC55107	
	National	DS55107	
		LM55107A	
	TI	SN55107B	
SN55108	Fairchild	55108	
	Motorola	MC55108	
	National	DS55108	
		LM55108A	
	TI	SN55108B	
SN55109	Fairchild	μA109	
	Motorola	LM109	
	National	LM109	
	SiliconG	SG109	
	Thomson-CSF		
		SFC2109	
SN55110	TI	SN55110A	
SN55114	Fairchild	96114	
		9614	
	TI	SN75114	
SN55115	Fairchild	96115	
		9615	
	TI	9615	
		SN75115	
SN55121	National	DS55121	
	Signetics	**S8T13**	**876**
SN55122	National	DS55122	
SN55123	LinearTech	LM123	
	Motorola	**LM123**	**3531**
		MC78T05	
	National	LM123	
	SiliconG	SG123	
SN55138	SiliconG	SG55138	
SN55154	SiliconG	SG55154	
SN55180	National	DM7800	
SN55182	National	DS7820	
SN55183	National	DS7830	
SN5520	National	LM5520	
	SiliconG	SG5520	
SN55207	AMD	LM207	
	National	LM207	
	RCA	CA207	
	SiliconG	SG207	
	Thomson-CSF		
		SFC2207	
SN5522	Motorola	MC5522	
		MC5523	
	National	LM5522	
	SiliconG	SG5522	
SN55236	SiliconG	SG55236	
SN5524	Fairchild	MC5524	
	Motorola	MC5524	
	National	LM5524	
	Raytheon	RM5524	
	SiliconG	SG5524	
SN5526	SiliconG	SG5526	
SN5527	SiliconG	SG5527	
SN5528	Fairchild	MC5528	
	Motorola	MC5528	
	National	LM5528	
	SiliconG	SG5528	
SN55325	Fairchild	MC55325	
	Motorola	MC55325	
	National	DS55325	
		LM55325	
	Signetics	55325	
	SiliconG	SG55325	
SN5535	Motorola	MC5535	
	National	LM5535	
	SiliconG	SG5535	
SN5536	SiliconG	SG5536	
SN55361	National	DS55361	
SN55365	National	DS55365	
SN5537	SiliconG	SG5537	
SN55450	Fairchild	55450	
	Signetics	55450	
	SiliconG	SG55450	
SN55451	Fairchild	55451	
	National	DS55451	
	Signetics	55451	
	SiliconG	SG55451	
SN55452	Fairchild	55452	
	National	DS55452	
	Signetics	55452	
	SiliconG	SG55452	
SN55453	Fairchild	55453	
	National	DS55453	
		LM55453	
	Signetics	55453	
	SiliconG	SG55453	
SN55454	National	DS55454	
	Signetics	55454	
	SiliconG	SG55454	
SN55460	National	DS55460	
	SiliconG	SG55460	
SN55461	National	DS55461	
	SiliconG	SG55461	
SN55462	National	DS55462	
	SiliconG	SG55462	
SN55463	National	DS55463	
	SiliconG	SG55463	
SN55464	National	DS55464	
	SiliconG	SG55464	
SN55471	SiliconG	SG55471	
SN55472	SiliconG	SG55472	
SN55473	SiliconG	SG55473	
SN55474	SiliconG	SG55474	
SN55480	National	DS7880	
SN55493	National	DS55493	
SN55494	National	DS55494	
SN72748P	AMD	LM201	
	AD	AD201	
	Fairchild	μA201	
		μA748	
	Intersil	LM748	
		μA748	
	Motorola	LM201	
		MC1748	
	National	LM201	
		LM748	
	Plessey	SL748	
	RCA	CA201	
		CA748	
		LM748	
	SiliconG	SG201	

(Continued)

Manufacturer Device	Replacement Source	Device	IC Master Page
SN72748P	SiliconG	SG748	
	TI	LM201	
		μA748	
	Thomson-CSF		
		SFC2201	
		SFC2748	
SN7400	Fairchild	7400	
	Hitachi	HD7400	
	National	DM7400	
	Signetics	**7400**	**860**
	Toshiba	TC7400	
SN7401	Fairchild	7401	
	Hitachi	HD7401	
	National	DM7401	
SN7402	Fairchild	7402	
	Hitachi	HD7402	
	National	DM7402	
	Signetics	**7402**	**860**
SN7403	Fairchild	7403	
	Hitachi	HD7403	
	National	DM7403	
	Signetics	**7403**	**860**
SN7404	Fairchild	7404	
	Hitachi	HD7404	
	National	DM7404	
	Signetics	**7404**	**860**
	Toshiba	TC7404	
SN7405	Fairchild	7405	
	Hitachi	HD7405	
	National	DM7405	
	Signetics	**7405**	**860**
SN7406	Fairchild	7406	
	Hitachi	HD7406	
	National	DM7406	
	Signetics	**7406**	**860**
SN7407	Fairchild	7407	
	Hitachi	HD7407	
	National	DM7407	
	Signetics	**7407**	**860**
SN7408	Fairchild	7408	
	Hitachi	HD7408	
	National	DM7408	
	Signetics	**7408**	**860**
SN7409	Fairchild	7409	
	Hitachi	HD7409	
	National	DM7409	
SN7410	Fairchild	7410	
	Hitachi	HD7410	
	National	DM7410	
	Signetics	**7410**	**860**
	Toshiba	TC7410	
SN74107	Fairchild	74107	
	Hitachi	HD74107	
	National	DM74107	
	Signetics	**74107**	**860**
SN74109	National	DM74109	
	Signetics	**74109**	**860**
SN74116	**Signetics**	**74116**	**860**
SN7412	Fairchild	7412	
	Hitachi	HD7412	
SN74121	Fairchild	74121	
	Hitachi	HD74121	
	National	DM74121	
	Signetics	**74121**	**860**
SN74122	Fairchild	74122	
		9601	
	National	DM8601	
		DM9601	
	Raytheon	RF8601	
		RF9601	
	Signetics	**N8T22**	**876**
		S8T22	
SN74123	Fairchild	74123	
	National	DM74123	
	Signetics	**74123**	**861**
SN74125	Fairchild	74125	
	Hitachi	HD74125	
	National	DM74125	
		DM8093	
	Signetics	**74125**	**861**
	TI	**SN74425**	**1034**
SN74126	Fairchild	74126	
	Hitachi	HD74126	
	National	DM74126	
		DM8094	
	Signetics	**74126**	**861**
	TI	**SN74426**	**1034**
SN74128	**Signetics**	**74128**	**861**
SN74129	Fairchild	74193	
	National	DM74193	
		DM8563	

(Continued)

Manufacturer Device	Replacement Source	Device	IC Master Page
SN74129	**Signetics**	**74193**	**861**
	TI	**SN74193**	**990**
SN7413	Fairchild	7413	
	Hitachi	HD7413	
	National	DM7413	
	Signetics	**7413**	**860**
SN74132	Fairchild	74132	
	Hitachi	HD74132	
	National	DM74132	
	Signetics	**74132**	**861**
SN74136	Fairchild	74136	
	Hitachi	HD74136	
SN7414	Fairchild	7414	
	Hitachi	HD7414	
	National	DM7414	
	Signetics	**7414**	**860**
SN74141	Fairchild	74141	
		93141	
	Hitachi	HD74141	
		HD7441	
	National	DM74141	
		DM7441	
	Signetics	74141	
		7441	
SN74145	Fairchild	74145	
	Hitachi	HD74145	
	National	DM74145	
	Signetics	**74145**	**861**
SN74147	Hitachi	HD14508	
		HD74147	
	Motorola	MC14508	
	National	DM74147	
	RCA	CD4508	
	SGS	HCF4508	
	Signetics	**74147**	**861**
		HEF4508	
		N82147	
	SSS	SCL4508	
	Solitron	CM4508	
	Toshiba	TC4508	
SN74148	Fairchild	9318	
	Hitachi	HD74148	
	National	DM74148	
		DM8318	
	Signetics	**74148**	**861**
		N82148	
SN74150	Fairchild	74150	
	Hitachi	HD74150	
	National	DM74150	
	Signetics	**74150**	**861**
SN74151	Fairchild	74151	
	Hitachi	HD74151	
	National	DM74151	
	Signetics	**74151**	**861**
	TI	**SN74151A**	**972**
SN74153	Fairchild	74153	
	Hitachi	HD74153	
	National	DM74153	
	Signetics	**74153**	**861**
SN74155	Fairchild	74155	
	National	DM74155	
	Signetics	**74155**	**861**
SN74156	Fairchild	74156	
	Hitachi	HD74156	
	National	DM74156	
	Signetics	**74156**	**861**
SN74157	Hitachi	HD74157	
	National	DM74157	
	Signetics	**74157**	**861**
SN74159	Fairchild	74159	
SN7416	Fairchild	7416	
	Hitachi	HD7416	
	National	DM7416	
	Signetics	**7416**	**860**
SN74160	Fairchild	74160	
	Hitachi	HD74160	
	National	DM74160	
	Signetics	**74160**	**861**
SN74161	Fairchild	74161	
	Hitachi	HD74161	
	National	DM74161	
	Signetics	**74161**	**861**
SN74162	Fairchild	74162	
	Hitachi	HD74162	
	National	DM74162	
SN74163	Fairchild	74163	
	Hitachi	HD74163	
	National	DM74163	
	Signetics	**74163**	**861**
SN74164	AMD	SN74164	
	Fairchild	74164	
	Hitachi	HD74164	

(Continued)

◆ Discontinued

The manufacturers report their devices can be used as direct replacements.
Performance details often differ, so compare the specifications considering your requirements.

Texas Instruments (Cont'd)

Manufacturer Device	Replacement Source	Device	IC Master Page
SN74164	National	DM74164	
		DM8570	
		DM8579	
	Signetics	**74164**	**861**
SN74165	Fairchild	74165	
	National	DM74165	
		DM8590	
	Signetics	**74165**	**861**
SN74166	Fairchild	74166	
	Hitachi	HD74166	
	National	DM74166	
	Signetics	**74166**	**861**
SN7417	Fairchild	7417	
	Hitachi	HD7417	
	National	DM7417	
	Signetics	**7417**	**860**
SN74170	Fairchild	74170	
	Hitachi	HD74170	
	National	DM74170	
	Signetics	**74170**	**861**
SN74172	Signetics	74172	
SN74173	Fairchild	74173	
	National	DM74173	
		DM8551	
	Raytheon	RC8T10	
	Signetics	**N8T10**	**876**
SN74174	Fairchild	74174	
	Hitachi	HD74174	
	National	DM74174	
	Signetics	**74174**	**861**
SN74175	Fairchild	74175	
	Hitachi	HD74175	
	National	DM74175	
	Signetics	**74175**	**861**
SN74176	Fairchild	74176	
		96176	
	National	DM74176	
		DM8280	
	Raytheon	RC8280	
	Signetics	74176	
		N8280	
SN74177	Fairchild	74177	
	National	DM74177	
		DM8281	
	Raytheon	RC8281	
	Signetics	74177	
		N8281	
SN74178	Raytheon	RC8270	
SN74179	Fairchild	74179	
	Raytheon	RC8271	
	Signetics	**N8271**	**876**
SN74180	Fairchild	74180	
	Hitachi	HD74180	
	National	DM74180	
	Signetics	**74180**	**861**
SN74181	Fairchild	9341	
	Hitachi	HD74181	
	National	DM74181	
	Raytheon	RC9341	
	Signetics	**74181**	**861**
SN74182	Fairchild	9342	
	Hitachi	HD74182	
	National	DM74182	
SN74184	National	DM74184	
SN74185	National	DM74185	
SN74185A	National	DM74185A	
SN74187	National	DM74187	
SN74190	Fairchild	74190	
	Hitachi	HD74190	
	National	DM74190	
	Signetics	**74190**	**861**
SN74191	Fairchild	74191	
	Hitachi	HD74191	
	National	DM74191	
	Signetics	**74191**	**861**
SN74192	Fairchild	74192	
		9360	
	National	DM74192	
		DM8560	
	Raytheon	RC9360	
	Signetics	**74192**	**861**
SN74193	Fairchild	74193	
	National	DM74193	
		DM8563	
	Signetics	**74193**	**861**
	TI	SN74129	
SN74194	Fairchild	74194	
	Hitachi	HD74194	
	National	DM74194	
	Signetics	**74194**	**861**
SN74195	Fairchild	74195	
	National	DM74195	
	Signetics	**74195**	**861**
SN74196	Fairchild	74196	
	National	DM74196	
		DM8290	
	Raytheon	RC8290	
	Signetics	74196	
SN74197	Fairchild	74197	
	National	DM74197	
		DM8291	
	Raytheon	RC8291	
	Signetics	74197	
SN74198	Fairchild	74198	
	Hitachi	HD74198	
	National	DM74198	
	Signetics	74198	
SN74199	Fairchild	74199	
	National	DM74199	
	Signetics	**74199**	**861**
SN7420	Fairchild	7420	
		9004	
	Hitachi	HD7420	
	National	DM7420	
		DM9004C	
	Signetics	**7420**	**860**
	Toshiba	TC7420	
SN74206	AMD	AM27LS01	
		AM29720	
	Fairchild	93411	
		93L411	
	Intel	3107	
	National	DM74S206	
		N82S117	
		N82S17	
	Signetics	74S301	
		N82S17	
	TI	**SN74S301**	**1016**
SN7421	National	DM7421	
SN7422	Fairchild	7422	
	Hitachi	HD7422	
SN74221	**Signetics**	**74221**	**861**
SN7423	Fairchild	7423	
	National	DM7423	
SN7425	Fairchild	7425	
	National	DM7425	
SN74251	National	DM74251	
		DM8121	
SN7426	Fairchild	7426	
	Hitachi	HD7426	
	National	DM7426	
		DM8810	
	Signetics	**7426**	**860**
SN7427	Fairchild	7427	
	Hitachi	HD7427	
	National	DM7427	
	Signetics	**7427**	**860**
SN74279	Fairchild	74279	
	Signetics	74279	
SN7428	**Signetics**	**7428**	**860**
SN74283	Fairchild	74283	
SN74284	National	DM8875A	
SN74285	National	DM8875B	
SN74290	Fairchild	74290	
SN74293	Fairchild	74293	
SN74298	Fairchild	74298	
	Signetics	**74298**	**862**
SN7430	Fairchild	7430	
	Hitachi	HD7430	
	National	DM7430	
	Signetics	**7430**	**860**
SN7432	Fairchild	7432	
	Hitachi	HD7432	
	National	DM7432	
	Signetics	**7432**	**860**
SN7433	**Signetics**	**7433**	**860**
SN74365	Motorola	MC6885	
		MC8T95	
	National	DM8095	
	Signetics	**N8T95**	**876**
SN74365A	**Signetics**	**74365A**	**862**
	TI	**SN74366A**	**1023**
SN74366	Motorola	MC6886	
		MC8T96	
	National	DM8096	
	Signetics	**N8T96**	**876**
SN74366A	**Signetics**	**74365A**	**862**
	TI	**SN74365A**	**1023**
SN74367	Motorola	MC6887	
		MC8T97	
	National	DM8097	
	Signetics	**N8T97**	**876**
SN74367A	**Signetics**	**74367A**	**862**
SN74368	Motorola	MC6888	
		MC8T98	
	National	DM8098	
		DS8674	
	Signetics	**N8T98**	**876**
SN74368A	**Signetics**	**74368A**	**862**
SN7437	Fairchild	7437	
	Hitachi	HD7437	
	National	DM7437	
	Signetics	**7437**	**860**
SN7438	Fairchild	7438	
	Hitachi	HD7438	
	National	DM7438	
	Signetics	**7438**	**860**
SN7440	Fairchild	7440	
	Hitachi	HD7440	
	National	DM7440	
	Signetics	**7440**	**860**
SN7442	Fairchild	7442	
	Hitachi	HD7442	
	National	DM7442	
		DM8842	
	Signetics	**7442**	**860**
	TI	**SN7442A**	**933**
SN74425	Fairchild	74125	
	Hitachi	HD74125	
	National	DM74125	
		DM8093	
	Signetics	**74125**	**861**
	TI	**SN74125**	**963**
SN74426	Fairchild	74126	
	Hitachi	HD74126	
	National	DM74126	
		DM8094	
	Signetics	**74126**	**861**
	TI	**SN74126**	**963**
SN7443	Hitachi	HD7443	
SN7444	Hitachi	HD7444	
SN7445	Fairchild	7445	
	Hitachi	HD7445	
	National	DM7445	
	Signetics	**7445**	**860**
SN7446	Fairchild	7446	
	Hitachi	HD7446	
	TI	**SN7446A**	**935**
SN7447	Fairchild	7447	
	Hitachi	HD7447	
	National	DM7447	
	TI	**SN7447A**	**935**
SN7448	Fairchild	7448	
	National	DM7448	
		DM8848	
	Signetics	N8T54	
	TI	SN7448A	
SN7450	Fairchild	7450	
	Hitachi	HD7450	
	National	DM7450	
	Signetics	**7450**	**860**
SN7451	Fairchild	7451	
	Hitachi	HD7451	
	National	DM7451	
	Signetics	**7451**	**860**
SN7453	Fairchild	7453	
	Hitachi	HD7453	
	National	DM7453	
SN7454	Fairchild	7454	
	Hitachi	HD7454	
	National	DM7454	
SN7460	Fairchild	7460	
	Hitachi	HD7460	
	National	DM7460	
SN7470	Fairchild	7470	
	Hitachi	HD7470	
	National	DM7470	
SN7472	Fairchild	7472	
	Hitachi	HD7472	
	National	DM7472	
SN7473	Fairchild	7473	
	Hitachi	HD7473	
	National	DM7473	
	Signetics	**7473**	**860**
SN7474	Fairchild	7474	
	Hitachi	HD7474	
	National	DM7474	
	Signetics	**7474**	**860**
SN7475	Fairchild	7475	
	Hitachi	HD7475	
	National	DM7475	
	Signetics	**7475**	**860**
SN7476	Fairchild	7476	
	Hitachi	HD7476	
		(Continued)	
SN7476	National	DM7476	
	Signetics	**7476**	**860**
SN7477	Signetics	7477	
SN7482	Hitachi	HD7482	
	National	DM7482	
SN7483	Fairchild	7483	
	Hitachi	HD7483	
	National	DM7483	
	Signetics	**7483**	**860**
	TI	**SN7483A**	**949**
SN7485	Fairchild	7485	
	Hitachi	HD7485	
	National	DM7485	
	Signetics	**7485**	**860**
SN7486	Fairchild	7486	
	Hitachi	HD7486	
	National	DM7486	
	Signetics	**7486**	**860**
SN7488	Fairchild	7488	
	Motorola	MC4002	
	National	DM7488	
	Signetics	7488	
		N8224	
	TI	SN7488A	
SN7489	AMD	31L01	
		AM27LS02	
		AM27S02	
		AM3101	
		AM3101A	
		SN7489-1	
	Fairchild	74S289	
	Intel	3101	
	Motorola	MC4064	
	National	DM7589	
	NEC	μPB2089	
		μPB2289	
	Signetics	3101	
		3101A	
		7489	
		N8225	
		S3101	
SN7490	Fairchild	7490	
	Hitachi	HD7490	
	National	DM7490	
	Signetics	**7490**	**860**
	TI	**SN7490A**	**952**
SN7491	Fairchild	7491	
	Hitachi	HD7491	
	National	DM7491	
	Signetics	**7491**	**860**
	TI	**SN7491A**	**952**
SN7492	Fairchild	7492	
	Hitachi	HD7492	
	National	DM7492	
	Signetics	**7492**	**860**
	TI	**SN7492A**	**952**
SN7493	Fairchild	7493	
	Hitachi	HD7493	
	National	DM7493	
	Signetics	**7493**	**860**
	TI	**SN7493A**	**953**
SN7494	Fairchild	7494	
	Hitachi	HD7494	
	Signetics	**7494**	**860**
SN7495	Fairchild	7495	
	Hitachi	HD7495	
	National	DM7495	
	Signetics	7495	
	TI	**SN7495A**	**954**
SN7496	Fairchild	7496	
	Hitachi	HD7496	
	National	DM7496	
	Signetics	**7496**	**860**
SN7497	Fairchild	7497	
SN74ALS00	**Motorola**	**SN74ALS00**	**822**
	National	DM74ALS00	
SN74ALS01	National	DM74ALS01	
SN74ALS02	**Motorola**	**SN74ALS02**	**822**
	National	DM74ALS02	
SN74ALS03	National	DM74ALS03	
SN74ALS04	**Motorola**	**SN74ALS04**	**822**
	National	DM74ALS04	
SN74ALS05	National	DM74ALS05	
~~SN74ALS06~~	~~**Motorola**~~	~~**SN74ALS06**~~	~~**822**~~
	National	DM74ALS08	
SN74ALS09	**Motorola**	**SN74ALS09**	**822**
	National	DM74ALS09	
SN74ALS10	National	DM74ALS10	
SN74ALS1000	National	DM74ALS1000	
SN74ALS1002	National	DM74ALS1002	
SN74ALS1003	National	DM74ALS1003	
SN74ALS1004	National	DM74ALS1004	

◆ Discontinued

Bold face device numbers indicate manufacturers data is provided in the IC Master on the pages noted.

ALTERNATE SOURCE DIRECTORY

© IC MASTER 1984

Texas Instruments (Cont'd)

Manufacturer Device	Replacement Source	Device	IC Master Page
SN74ALS1005	National	DM74ALS1005	
SN74ALS1008	National	DM74ALS1008	
SN74ALS1010	National	DM74ALS1010	
SN74ALS1011	National	DM74ALS1011	
SN74ALS1020	National	DM74ALS1020	
SN74ALS1032	National	DM74ALS1032	
SN74ALS1034	National	DM74ALS1034	
SN74ALS1035	National	DM74ALS1035	
SN74ALS109	National	DM74ALS109	
SN74ALS11	National	DM74ALS11	
SN74ALS112	National	DM74ALS112	
SN74ALS113	National	DM74ALS113	
SN74ALS114	National	DM74ALS114	
SN74ALS12	National	DM74ALS12	
~~SN74ALS1240~~	~~National~~	~~DM74ALS1240~~	
SN74ALS1241	National	DM74ALS1241	
		DM74ALS1242	
	TI	**SN74ALS1242**	1119
SN74ALS1242	National	DM74ALS1241	
		DM74ALS1242	
	TI	**SN74ALS1241**	1119
SN74ALS1243	National	DM74ALS1243	
SN74ALS1244	National	DM74ALS1244	
SN74ALS131	National	DM74ALS131	
SN74ALS133	National	DM74ALS133	
SN74ALS137	National	DM74ALS137	
SN74ALS138	National	DM74ALS138	
SN74ALS15	National	DM74ALS15	
SN74ALS151	National	DM74ALS151	
SN74ALS153	National	DM74ALS153	
SN74ALS157	National	DM74ALS157	
SN74ALS158	National	DM74ALS158	
SN74ALS160	**Motorola**	**SN74ALS160**	823
	National	DM74ALS160	
SN74ALS161	**Motorola**	**SN74ALS161**	823
	National	DM74ALS161	
SN74ALS162	**Motorola**	**SN74ALS162**	823
	National	DM74ALS162	
SN74ALS163	**Motorola**	**SN74ALS163**	823
	National	DM74ALS163	
SN74ALS168	National	DM74ALS168	
SN74ALS169	National	DM74ALS169	
SN74ALS174	National	DM74ALS174	
SN74ALS175	National	DM74ALS175	
SN74ALS20	National	DM74ALS20	
SN74ALS21	National	DM74ALS21	
SN74ALS22	National	DM74ALS22	
SN74ALS240	**Motorola**	**SN74ALS240**	823
	National	DM74ALS240	
SN74ALS241	**Motorola**	**SN74ALS241**	823
	National	DM74ALS241	
SN74ALS242	**Motorola**	**SN74ALS242**	823
	National	DM74ALS242	
SN74ALS243	**Motorola**	**SN74ALS243**	823
	National	DM74ALS243	
SN74ALS244	**Motorola**	**SN74ALS244**	823
	National	DM74ALS244	
SN74ALS245	**Motorola**	**SN74ALS245**	823
	National	DM74ALS245	
SN74ALS251	National	DM74ALS251	
SN74ALS253	National	DM74ALS253	
SN74ALS257	National	DM74ALS257	
SN74ALS258	National	DM74ALS258	
SN74ALS27	National	DM74ALS27	
SN74ALS273	**Motorola**	**SN74ALS273**	823
	National	DM74ALS273	
SN74ALS28	National	DM74ALS28	
SN74ALS30	National	DM74ALS30	
SN74ALS32	**Motorola**	**SN74ALS32**	822
	National	DM74ALS32	
SN74ALS33	National	DM74ALS33	
SN74ALS352	National	DM74ALS352	
SN74ALS353	National	DM74ALS353	
SN74ALS37	National	DM74ALS37	
SN74ALS373	**Motorola**	**SN74ALS373**	823
	National	DM74ALS373	
SN74ALS374	**Motorola**	**SN74ALS374**	823
	National	DM74ALS374	
SN74ALS38	National	DM74ALS38	
SN74ALS40	National	DM74ALS40	
SN74ALS518	National	DM74ALS518	
SN74ALS519	National	DM74ALS519	
SN74ALS520	National	DM74ALS520	
SN74ALS521	National	DM74ALS521	
SN74ALS522	National	DM74ALS522	
SN74ALS533	National	DM74ALS533	
SN74ALS534	National	DM74ALS534	
SN74ALS563	National	DM74ALS563	
SN74ALS564	National	DM74ALS564	
SN74ALS573	**Motorola**	**SN74ALS573**	823
	National	DM74ALS573	
SN74ALS574	**Motorola**	**SN74ALS574**	823
	National	DM74ALS574	
SN74ALS576	**Motorola**	**SN74ALS576**	823
	National	DM74ALS576	
SN74ALS580	**Motorola**	**SN74ALS580**	823
	National	DM74ALS580	
SN74ALS620	**Motorola**	**SN74ALS620**	823
	National	DM74ALS620	
SN74ALS621	**Motorola**	**SN74ALS621**	823
	National	DM74ALS621	
SN74ALS623	**Motorola**	**SN74ALS623**	823
	National	DM74ALS623	
SN74ALS640	**Motorola**	**SN74ALS640**	823
	National	DM74ALS640	
~~SN74ALS641~~	~~Motorola~~	~~SN74ALS641~~	823
	National	DM74ALS641	
SN74ALS642	**Motorola**	**SN74ALS642**	823
	National	DM74ALS642	
SN74ALS643	**Motorola**	**SN74ALS643**	823
	National	DM74ALS643	
SN74ALS644	**Motorola**	**SN74ALS644**	823
	National	DM74ALS644	
SN74ALS645	National	DM74ALS645	
SN74ALS689	National	DM74ALS689	
SN74ALS74	**Motorola**	**SN74ALS74**	823
	National	DM74ALS74	
SN74ALS804	National	DM74ALS804	
SN74ALS805	National	DM74ALS805	
SN74ALS808	National	DM74ALS808	
SN74ALS832	National	DM74ALS832	
SN74ALS873	**Motorola**	**SN74ALS873**	823
	National	DM74ALS873	
SN74ALS874	**Motorola**	**SN74ALS874**	823
	National	DM74ALS874	
SN74ALS876	**Motorola**	**SN74ALS876**	823
	National	DM74ALS876	
SN74ALS880	**Motorola**	**SN74ALS880**	823
	National	DM74ALS880	
SN74AS00	National	DM74AS00	
SN74AS02	National	DM74AS02	
SN74AS04	National	DM74AS04	
SN74AS08	National	DM74AS08	
SN74AS10	National	DM74AS10	
SN74AS109	National	DM74AS109	
SN74AS11	National	DM74AS11	
SN74AS112	National	DM74AS112	
SN74AS113	National	DM74AS113	
SN74AS114	National	DM74AS114	
SN74AS151	National	DM74AS151	
SN74AS152	National	DM74AS152	
SN74AS153	National	DM74AS153	
SN74AS157	National	DM74AS157	
SN74AS158	National	DM74AS158	
SN74AS160	National	DM74AS160	
SN74AS161	National	DM74AS161	
SN74AS163	National	DM74AS163	
SN74AS168	National	DM74AS168	
SN74AS169	National	DM74AS169	
SN74AS174	National	DM74AS174	
SN74AS175	National	DM74AS175	
SN74AS181	National	DM74AS181	
SN74AS20	National	DM74AS20	
SN74AS21	National	DM74AS21	
SN74AS230	National	DM74AS230	
SN74AS231	National	DM74AS231	
SN74AS240	National	DM74AS240	
SN74AS241	National	DM74AS241	
SN74AS242	National	DM74AS242	
SN74AS243	National	DM74AS243	
SN74AS244	National	DM74AS244	
SN74AS251	National	DM74AS251	
SN74AS253	National	DM74AS253	
SN74AS257	National	DM74AS257	
SN74AS258	National	DM74AS258	
SN74AS27	National	DM74AS27	
SN74AS280	National	DM74AS280	
SN74AS30	National	DM74AS30	
SN74AS32	National	DM74AS32	
SN74AS34	National	DM74AS34	
SN74AS352	National	DM74AS352	
SN74AS353	National	DM74AS353	
SN74AS373	National	DM74AS373	
SN74AS374	National	DM74AS374	
SN74AS533	National	DM74AS533	
SN74AS534	National	DM74AS534	
SN74AS640	National	DM74AS640	
SN74AS641	National	DM74AS641	
SN74AS642	National	DM74AS642	
SN74AS643	National	DM74AS643	
SN74AS645	National	DM74AS645	
SN74AS646	National	DM74AS646	
SN74AS648	National	DM74AS648	
SN74AS651	National	DM74AS651	
SN74AS652	National	DM74AS652	
SN74AS74	National	DM74AS74	
SN74AS821	**AMD**	**AM29821**	2802
SN74AS822	**AMD**	**AM29822**	2802
SN74AS823	**AMD**	**AM29823**	2802
SN74AS824	**AMD**	**AM29824**	2802
SN74AS825	**AMD**	**AM29825**	2802
SN74AS826	**AMD**	**AM29826**	2802
SN74AS827	**AMD**	**AM29827**	2804
SN74AS828	**AMD**	**AM29828**	2804
SN74AS833	**AMD**	**AM29833**	2806
SN74AS834	**AMD**	**AM29834**	2806
SN74AS841	**AMD**	**AM29841**	2807
~~SN74AS843~~	~~AMD~~	~~AM29843~~	~~2807~~
SN74AS844	**AMD**	**AM29844**	2807
SN74AS845	**AMD**	**AM29845**	2807
SN74AS846	**AMD**	**AM29846**	2807
SN74AS853	AMD	AM29853	
SN74AS854	AMD	AM29854	
SN74AS861	**AMD**	**AM29861**	2804
SN74AS862	**AMD**	**AM29862**	2804
SN74AS863	**AMD**	**AM29863**	2804
SN74AS864	**AMD**	**AM29864**	2804
SN74H00	Fairchild	74H00	
	National	DM74H00	
SN74H01	Fairchild	74H01	
		74H08	
	National	DM74H01	
		DM74H08	
SN74H04	Fairchild	74H04	
	National	DM74H04	
SN74H05	Fairchild	74H05	
SN74H10	Fairchild	74H10	
	National	DM74H10	
SN74H101	Fairchild	74H101	
	Signetics	74H101	
SN74H103	Fairchild	74H103	
	National	DM74H103	
SN74H106	Fairchild	74H106	
	National	DM74H106	
SN74H108	Fairchild	74H108	
	National	DM74H108	
SN74H11	Fairchild	74H11	
	National	DM74H11	
SN74H183	Fairchild	74H183	
	Hitachi	HD74H183	
SN74H20	Fairchild	74H20	
	National	DM74H20	
SN74H21	Fairchild	74H21	
	National	DM74H21	
SN74H22	Fairchild	74H22	
SN74H30	Fairchild	74H30	
	National	DM74H30	
SN74H40	Fairchild	74H40	
	National	DM74H40	
SN74H50	Fairchild	74H50	
	National	DM74H50	
SN74H51	Fairchild	74H51	
	National	DM74H51	
SN74H52	Fairchild	74H52	
SN74H53	Fairchild	74H53	
SN74H54	Fairchild	74H54	
SN74H55	Fairchild	74H55	
SN74H61	Fairchild	74H61	
SN74H62	Fairchild	74H62	
	National	DM74H62	
SN74H72	Fairchild	74H72	
SN74H73	Fairchild	74H73	
SN74H74	Fairchild	74H74	
	National	DM74H74	
SN74H87	Fairchild	74H87	
SN74LS00	Fairchild	74LS00	
	Hitachi	HD74LS00	
	Motorola	SN74LS00	
	National	DM74LS00	
	SGS	T74LS00	
	Signetics	74LS00	
SN74LS01	Fairchild	74LS01	
	Hitachi	HD74LS01	
	Motorola	SN74LS01	
	National	DM74LS01	
	Signetics	74LS01	
SN74LS02	Fairchild	74LS02	
	Hitachi	HD74LS02	
	Motorola	SN74LS02	
	National	DM74LS02	
	SGS	T74LS02	
	Signetics	74LS02	
SN74LS03	Fairchild	74LS03	
	Hitachi	HD74LS03	
	Motorola	SN74LS03	
	National	DM74LS03	
	SGS	T74LS03	
SN74LS04	Fairchild	74LS04	
	Hitachi	HD74LS04	
	Motorola	SN74LS04	
	National	DM74LS04	
	SGS	T74LS04	
	Signetics	74LS04	
SN74LS05	Fairchild	74LS05	
	Hitachi	HD74LS05	
	Motorola	SN74LS05	
	National	DM74LS05	
	NEC	μPB74LS05	
	SGS	T74LS05	
	Signetics	74LS05	
SN74LS08	Fairchild	74LS08	
	Hitachi	HD74LS08	
	Motorola	SN74LS08	
	National	DM74LS08	
	SGS	T74LS08	
	Signetics	74LS08	
SN74LS09	Fairchild	74LS09	
	Hitachi	HD74LS09	
	Motorola	SN74LS09	
	National	DM74LS09	
	SGS	T74LS09	
SN74LS10	Fairchild	74LS10	
	Hitachi	HD74LS10	
	Motorola	SN74LS10	
	National	DM74LS10	
	SGS	T74LS10	
	Signetics	74LS10	
SN74LS107	Hitachi	HD74LS107	
	Motorola	SN74LS107A	
	National	DM74LS107	
	Signetics	74LS107	
	TI	**SN74LS107A**	957
SN74LS107A	Hitachi	HD74LS107	
	Motorola	SN74LS107A	
	National	DM74LS107	
	Signetics	74LS107	
	TI	SN74LS107	
SN74LS109A	Fairchild	74LS109	
	Hitachi	HD74LS109	
	Motorola	SN74LS109	
		SN74LS109A	
	National	DM74LS109	
	SGS	T74LS109	
	Signetics	74LS109	
SN74LS11	Fairchild	74LS11	
	Hitachi	HD74LS11	
	Motorola	SN74LS11	
	National	DM74LS11	
	SGS	T74LS11	
	Signetics	74LS11	
SN74LS112A	Fairchild	74LS112	
	Hitachi	HD74LS112	
	Motorola	SN74LS112A	
	National	DM74LS112	
	SGS	T74LS112	
	Signetics	74LS112	
SN74LS113A	Fairchild	74LS113	
	Hitachi	HD74LS113	
	Motorola	SN74LS113A	
	National	DM74LS113	
	SGS	T74LS113	
	Signetics	74LS113	
SN74LS114A	Fairchild	74LS114	
	Hitachi	HD74LS114	
	Motorola	SN74LS114A	
	National	DM74LS114	
	SGS	T74LS114	
SN74LS12	Hitachi	HD74LS12	
	Motorola	SN74LS12	
	National	DM74LS12	
	Signetics	74LS12	
SN74LS122	Hitachi	HD74LS122	
	Motorola	SN74LS122	
	National	DM74LS122	
SN74LS123	Hitachi	HD74LS123	
	Motorola	SN74LS123	
	National	DM74LS123	
SN74LS124	Motorola	SN74LS124	
SN74LS125A	Fairchild	74LS125A	
	Motorola	SN74LS125A	
	National	DM74LS125	
	SGS	T74LS125	
	Signetics	74LS125A	

◆ Discontinued

The manufacturers report their devices can be used as direct replacements.
Performance details often differ, so compare the specifications considering your requirements.

Texas Instruments (Cont'd)

Manufacturer Device	Replacement Source	Device	IC Master Page
SN74LS126A	Fairchild	74LS126	
	Motorola	SN74LS126A	
	National	DM74LS126	
	SGS	T74LS126	
	Signetics	74LS126A	
SN74LS13	Fairchild	74LS13	
	Hitachi	HD74LS13	
	Motorola	SN74LS13	
	National	DM74LS13	
	Signetics	74LS13	
SN74LS132	Fairchild	74LS132	
	Hitachi	HD74LS132	
	Motorola	SN74LS132	
	National	DM74LS132	
	SGS	T74LS132	
	Signetics	74LS132	
SN74LS136	Fairchild	74LS136	
	Hitachi	HD74LS136	
	Motorola	SN74LS136	
	National	DM74LS136	
	SGS	T74LS136	
	Signetics	74LS136	
SN74LS137	Motorola	SN74LS137	
SN74LS138	Fairchild	74LS138	
	Hitachi	HD74LS138	
	Motorola	SN74LS138	
	National	DM74LS138	
	SGS	T74LS138	
	Signetics	74LS138	
SN74LS139	Fairchild	74LS139	
	Hitachi	HD74LS139	
	Motorola	SN74LS139	
	National	DM74LS139	
	SGS	T74LS139	
	Signetics	74LS139	
SN74LS14	Fairchild	74LS14	
	Hitachi	HD74LS14	
	Motorola	SN74LS14	
	National	DM74LS14	
	Signetics	74LS14	
SN74LS145	Fairchild	74LS145	
	Motorola	SN74LS145	
SN74LS147	Motorola	SN74LS147	
SN74LS148	Hitachi	HD74LS148	
	Motorola	SN74LS148	
SN74LS15	Fairchild	74LS15	
	Hitachi	HD74LS15	
	Motorola	SN74LS15	
	National	DM74LS15	
	SGS	T74LS15	
SN74LS151	Fairchild	74LS151	
	Hitachi	HD74LS151	
		HD74LS151A	
	Motorola	SN74LS151	
	National	DM74LS151	
	SGS	T74LS151	
	Signetics	74LS151	
SN74LS152	SGS	T74LS152	
SN74LS153	Fairchild	74LS153	
	Hitachi	HD74LS153	
	Motorola	SN74LS153	
	National	DM74LS153	
	SGS	T74LS153	
	Signetics	74LS153	
SN74LS155	Fairchild	74LS155	
	Hitachi	HD74LS155	
	Motorola	SN74LS155	
	National	DM74LS155	
	Signetics	74LS155	
SN74LS156	Fairchild	74LS156	
	Hitachi	HD74LS156	
	Motorola	SN74LS156	
	National	DM74LS156	
	SGS	T74LS156	
	Signetics	74LS156	
SN74LS157	Fairchild	74LS157	
	Hitachi	HD74LS157	
	Motorola	SN74LS157	
	National	DM74LS157	
	SGS	T74LS157	
	Signetics	74LS157	
SN74LS158	Fairchild	74LS158	
	Hitachi	HD74LS158	
	Motorola	SN74LS158	
	National	DM74LS158	
	SGS	T74LS158	
	Signetics	74LS158	
SN74LS160A	Fairchild	74LS160	
	Hitachi	HD74LS160A	
	Motorola	SN74LS160A	
		(Continued)	

Manufacturer Device	Replacement Source	Device	IC Master Page
SN74LS160A	National	DM74LS160	
	SGS	T74LS160	
	Signetics	74LS160	
		74LS160A	
SN74LS161A	Fairchild	74LS161A	
	Hitachi	HD74LS161A	
	Motorola	SN74LS161A	
	National	DM74LS161	
	NEC	μPB74LS161	
	SGS	T74LS161	
	Signetics	74LS161A	
SN74LS162A	Fairchild	74LS162	
	Hitachi	HD74LS162A	
	Motorola	SN74LS162A	
	National	DM74LS162	
	SGS	T74LS162	
	Signetics	74LS162A	
SN74LS163A	Fairchild	74LS163	
	Hitachi	HD74LS163	
		HD74LS163A	
	Motorola	SN74LS163A	
	National	DM74LS163	
	SGS	T74LS163	
	Signetics	74LS163A	
SN74LS164	Fairchild	74LS164	
	Hitachi	HD74LS164	
	Motorola	SN74LS164A	
	National	DM74LS164	
	SGS	T74LS164	
	Signetics	74LS164	
		74LS164A	
SN74LS165	Fairchild	74LS165	
	Motorola	SN74LS165	
	SGS	T74LS165	
SN74LS166A	Motorola	SN74LS166	
SN74LS168	Fairchild	74LS168	
	Hitachi	HD74LS168	
	Motorola	SN74LS168	
	National	DM74LS168	
	Signetics	74LS168A	
SN74LS170	Fairchild	74LS170	
	Motorola	SN74LS170	
	National	DM74LS170	
	SGS	T74LS170	
	Signetics	74LS170	
SN74LS173A	Fairchild	74LS173	
	Motorola	SN74LS173A	
	National	DM74LS173	
	SGS	T74LS173	
	Signetics	74LS173	
SN74LS174	Fairchild	74LS174	
	Hitachi	HD74LS174	
	Motorola	SN74LS174	
	National	DM74LS174	
	SGS	T74LS174	
	Signetics	74LS174	
SN74LS175	Fairchild	74LS175	
	Hitachi	HD74LS175	
	Motorola	SN74LS175	
	SGS	T74LS175	
	Signetics	74LS175	
SN74LS181	Fairchild	74LS181	
	Hitachi	HD74LS181	
	Motorola	SN74LS181	
	SGS	T74LS181	
	Signetics	74LS181	
SN74LS182	Motorola	SN74LS182	
SN74LS183	Motorola	SN74LS183	
SN74LS189A	Fairchild	74LS189	
	National	DM74LS189	
SN74LS190	Fairchild	74LS190	
	Hitachi	HD74LS190	
	Motorola	SN74LS190	
	National	DM74LS190	
	SGS	T74LS190	
SN74LS191	Fairchild	74LS191	
	Hitachi	HD74LS191	
	Motorola	SN74LS191	
	National	DM74LS191	
	SGS	T74LS191	
	Signetics	74LS191	
SN74LS192	Fairchild	74LS192	
	Hitachi	HD74LS192	
	Motorola	SN74LS192	
	National	DM74LS192	
	SGS	T74LS192	
	Signetics	74LS192	
SN74LS193	Fairchild	74LS193	
	Hitachi	HD74LS193	
	Motorola	SN74LS193	
	National	DM74LS193	
		(Continued)	

Manufacturer Device	Replacement Source	Device	IC Master Page
SN74LS193	SGS	T74LS193	
	Signetics	74LS193	
SN74LS194A	Fairchild	74LS194A	
	Hitachi	HD74LS194A	
	Motorola	SN74LS194A	
	National	DM74LS194	
	SGS	T74LS194A	
	Signetics	74LS194A	
SN74LS195A	Fairchild	74LS195A	
	Hitachi	HD74LS195A	
	Motorola	SN74LS195A	
	National	DM74LS195	
	SGS	T74LS195A	
	Signetics	74LS195A	
SN74LS196	Fairchild	74LS196	
	Hitachi	HD74LS196	
	Motorola	SN74LS196	
	National	DM74LS196	
	Signetics	N82S80	
SN74LS197	Fairchild	74LS197	
	Hitachi	HD74LS197	
	Motorola	SN74LS197	
	National	DM74LS197	
	Signetics	74LS197	
SN74LS20	Fairchild	74LS20	
	Hitachi	HD74LS20	
	Motorola	SN74LS20	
	National	DM74LS20	
	SGS	T74LS20	
	Signetics	74LS20	
SN74LS200	AMD	AM27LS00	
	Fairchild	93421	
		93L420	
		93L421	
	Intel	3106	
	Motorola	MC4256	
	National	93L420	
		93L421	
		DM74S200	
	NEC	μPB2200	
	Signetics	74200	
		N82S116	
		N82S16	
	TI	SN74S200	
		SN74S201	**993**
SN74LS21	Fairchild	74LS21	
	Hitachi	HD74LS21	
	Motorola	SN74LS21	
	National	DM74LS21	
	SGS	T74LS21	
	Signetics	74LS21	
SN74LS22	Fairchild	74LS22	
	Hitachi	HD74LS22	
	Motorola	SN74LS22	
	National	DM74LS22	
	SGS	T74LS22	
SN74LS221	Fairchild	74LS221	
	Hitachi	HD74LS221	
	Motorola	SN74LS221	
	National	DM74LS221	
SN74LS240	Fairchild	74LS240	
	Hitachi	HD74LS240	
	MMI	**SN74LS240**	**804**
	Motorola	SN74LS240	
	Signetics	74LS240	
SN74LS241	Fairchild	74LS241	
	Hitachi	HD74LS241	
	MMI	**SN74LS241**	**804**
	Motorola	SN74LS241	
	Signetics	74LS241	
SN74LS242	Fairchild	74LS242A	
	Motorola	SN74LS242	
	Signetics	74LS242	
SN74LS243	Fairchild	74LS243A	
	Motorola	SN74LS243	
	Signetics	74LS243	
SN74LS244	Fairchild	74LS244	
	Hitachi	HD74LS244	
	MMI	**SN74LS244**	**804**
	Motorola	SN74LS244	
	Signetics	74LS244	
SN74LS245	Fairchild	74LS245	
	GTEMicro	G74SC245	
	Mitel	MD74SC245	
	MMI	**SN74LS245**	**804**
	Motorola	SN74LS245	
	National	DM74LS245	
	Plessey	MV74SC245	
	SPI	SP74SC245	
	Signetics	74LS245	
		N8T245	**876**

Manufacturer Device	Replacement Source	Device	IC Master Page
SN74LS247	Fairchild	74LS247	
	Hitachi	HD74LS247	
	Motorola	SN74LS247	
	National	DM74LS247	
SN74LS248	Fairchild	74LS248	
	Hitachi	HD74LS248	
	Motorola	SN74LS248	
	National	DM74LS248	
	SGS	T74LS248	
SN74LS249	Fairchild	74LS249	
	Hitachi	HD74LS249	
	Motorola	SN74LS249	
	National	DM74LS249	
	SGS	T74LS249	
SN74LS251	Fairchild	74LS251	
	Hitachi	HD74LS251	
	Motorola	SN74LS251	
	National	DM74LS251	
	SGS	T74LS251	
	Signetics	74LS251	
SN74LS253	Fairchild	74LS253	
	Hitachi	HD74LS253	
	Motorola	SN74LS253	
	National	DM74LS253	
		DM8214	
	SGS	T74LS253	
	Signetics	74LS253	
SN74LS256	SGS	T74LS256	
SN74LS257	Fairchild	74LS257A	
	Hitachi	HD74LS257	
	Motorola	SN74LS257A	
	National	DM74LS257	
	SGS	T74LS257	
	Signetics	74LS257	
		74LS257A	
SN74LS258	Fairchild	74LS258A	
	Hitachi	HD74LS258	
	Motorola	SN74LS258A	
	National	DM74LS258	
	SGS	T74LS258	
	Signetics	74LS258	
SN74LS259	Fairchild	74LS259	
	Motorola	SN74LS259	
	SGS	T74LS259	
	Signetics	74LS259	
SN74LS26	Fairchild	74LS26	
	Hitachi	HD74LS26	
	Motorola	SN74LS26	
	National	DM74LS26	
	SGS	T74LS26	
	Signetics	74LS26	
SN74LS260	SGS	T74LS260	
SN74LS266	Fairchild	74LS266	
	Motorola	SN74LS266	
	National	DM74LS266	
	Raytheon	RC8242	
	SGS	T74LS266	
	Signetics	74LS266	
		N8242	**876**
SN74LS27	Fairchild	74LS27	
	Hitachi	HD74LS27	
	Motorola	SN74LS27	
	National	DM74LS27	
	SGS	T74LS27	
	Signetics	74LS27	
SN74LS273	**AMD**	**AM25LS273**	**1427**
	Fairchild	74LS273	
	MMI	**SN74LS273**	**804**
	Motorola	SN74LS273	
	SGS	T74LS273	
	Signetics	74LS273	
SN74LS279	Fairchild	74LS279	
	Hitachi	HD74LS279	
	Motorola	SN74LS279	
	National	DM74LS279	
	Signetics	74LS279	
SN74LS28	Fairchild	74LS28	
	Motorola	SN74LS28	
	SGS	T74LS28	
SN74LS280	Hitachi	HD74LS280	
	Motorola	SN74LS280	
SN74LS283	Fairchild	74LS283	
	Hitachi	HD74LS283	
		HD74LS283A	
	Motorola	SN74LS283	
	National	DM74LS283	
	SGS	T74LS283	
	Signetics	74LS283	
SN74LS289A	Fairchild	74LS289	
	National	DM74LS289	
SN74LS290	Fairchild	74LS290	
	Hitachi	HD74LS290	
		(Continued)	

◆ Discontinued

Bold face device numbers indicate manufacturers data is provided in the IC Master on the pages noted.

© IC MASTER 1984

Texas Instruments (Cont'd)

Manufacturer Device	Replacement Source	Device	IC Master Page
SN74LS290	Motorola	SN74LS290	
	National	DM74LS290	
	SGS	T74LS290	
	Signetics	74LS290	
SN74LS292	SGS	T74LS292	
SN74LS293	Fairchild	74LS293	
	Hitachi	HD74LS293	
	Motorola	SN74LS293	
	National	DM74LS293	
	SGS	T74LS293	
	Signetics	74LS293	
SN74LS295B	Fairchild	74LS295A	
	Motorola	SN74LS295A	
	SGS	T74LS295A	
	Signetics	74LS295A	
		74LS295B	
SN74LS298	Fairchild	74LS298	
	Hitachi	HD74LS298	
	Motorola	SN74LS298	
	SGS	T74LS298	
	Signetics	74LS298	
SN74LS299	AMD	SN74LS299	
	Fairchild	74LS299	
	Hitachi	HD74LS299	
	Motorola	SN74LS299	
	SGS	T74LS299	
SN74LS30	Fairchild	74LS30	
	Hitachi	HD74LS30	
	Motorola	SN74LS30	
	National	DM74LS30	
	SGS	T74LS30	
	Signetics	74LS30	
SN74LS32	Fairchild	74LS32	
	Hitachi	HD74LS32	
	Motorola	SN54LS32	
		SN74LS32	
	National	DM74LS32	
	SGS	T74LS32	
	Signetics	74LS32	
SN74LS322A	AMD	SN74LS322	
	Fairchild	74LS322	
	Motorola	SN74LS322	
SN74LS323	AMD	SN74LS323	
	Fairchild	74LS323	
	Motorola	SN74LS323	
	TI	**SN54LS323**	**1018**
SN74LS33	Fairchild	74LS33	
	Motorola	SN74LS33	
	Signetics	74LS33	
SN74LS352	Fairchild	74LS352	
	Motorola	SN74LS352	
	National	DM74LS352	
	SGS	T74LS352	
SN74LS353	Fairchild	74LS353	
	Motorola	SN74LS353	
	National	DM74LS353	
	SGS	T74LS353	
SN74LS365A	Fairchild	74LS365A	
	Motorola	SN74LS365A	
	National	DM74LS365	
	SGS	T74LS365A	
	Signetics	74LS365	
		74LS365A	
SN74LS366A	Fairchild	74LS366A	
	Motorola	SN74LS366A	
	National	DM74LS366	
	SGS	T74LS366A	
	Signetics	74LS366A	
SN74LS367A	Fairchild	74LS367A	
	Hitachi	HD74LS367	
		HD74LS367A	
	Motorola	SN74LS367A	
	National	DM74LS367	
	SGS	T74LS367A	
	Signetics	74LS367	
		74LS367A	
SN74LS368A	Fairchild	74LS368A	
	Hitachi	HD74LS368	
	Motorola	SN74LS368A	
	National	DM74LS368	
	SGS	T74LS368	
	Signetics	74LS368	
		74LS368A	
SN74LS37	Fairchild	74LS37	
	Hitachi	HD74LS37	
	Motorola	SN74LS37	
	National	DM74LS37	
	SGS	T74LS37	
	Signetics	74LS37	
SN74LS373	Fairchild	74LS373	
	MMI	**SN74LS373**	**804**
	Motorola	SN74LS373	
	SGS	T74LS373	
	Signetics	74LS373	
SN74LS374	Fairchild	74LS374	
	MMI	**SN74LS374**	**804**
	Motorola	SN74LS374	
	National	DM74LS374	
	SGS	T74LS374	
	Signetics	74LS374	
SN74LS375	Fairchild	74LS375	
	Motorola	SN74LS375	
	Signetics	74LS375	
SN74LS377	**AMD**	**AM25LS377**	**1427**
	Fairchild	74LS377	
	MMI	**SN74LS377**	**804**
	Motorola	SN74LS377	
	SGS	T74LS377	
	Signetics	74LS377	
SN74LS378	AMD	SN74LS378	
	Fairchild	74LS378	
	Motorola	SN74LS378	
	SGS	T74LS378	
	Signetics	74LS378	
SN74LS379	AMD	SN74LS379	
	Fairchild	74LS379	
	Motorola	SN74LS379	
	SGS	T74LS379	
SN74LS38	Fairchild	74LS38	
	Hitachi	HD74LS38	
	Motorola	SN74LS38	
	National	DM74LS38	
	SGS	T74LS38	
	Signetics	74LS38	
SN74LS381	AMD	SN74LS381	
SN74LS384	AMD	SN74LS384	
SN74LS385	AMD	SN74LS385	
	Motorola	SN74LS385	
SN74LS386	Hitachi	HD74LS386	
	Motorola	SN74LS386	
	National	DM74LS386	
SN74LS390	Fairchild	74LS390	
	Motorola	SN74LS390	
	SGS	T74LS390	
SN74LS393	Fairchild	74LS393	
	Motorola	SN74LS393	
	SGS	T74LS393	
	Signetics	74LS393	
SN74LS395A	Fairchild	74LS395	
	Motorola	SN74LS395	
	National	DM74LS395	
	SGS	T74LS395	
	Signetics	74LS395	
SN74LS398	Motorola	SN74LS398	
SN74LS399	AMD	SN74LS399	
	Motorola	SN74LS399	
SN74LS40	Fairchild	74LS40	
	Hitachi	HD74LS40	
	Motorola	SN74LS40	
	National	DM74LS40	
	SGS	T74LS40	
	Signetics	74LS40	
SN74LS42	Fairchild	74LS42	
	Hitachi	HD74LS42	
	Motorola	SN74LS42	
	National	DM74LS42	
	SGS	T74LS42	
	Signetics	74LS42	
SN74LS424	AMD	SN74LS424	
SN74LS47	Fairchild	74LS47	
	Hitachi	HD74LS47	
	Motorola	SN74LS47	
	National	DM74LS47	
	SGS	T74LS47	
SN74LS48	Fairchild	74LS48	
	Hitachi	HD74LS48	
	Motorola	SN74LS48	
	National	DM74LS48	
	SGS	T74LS48	
	Signetics	74LS48	
SN74LS49	Fairchild	74LS49	
	Hitachi	HD74LS49	
	Motorola	SN74LS49	
	National	DM74LS49	
	SGS	T74LS49	
SN74LS490	Fairchild	74LS490	
	Motorola	SN74LS490	
	SGS	T74LS490	
	Signetics	74LS490	
SN74LS51	Fairchild	74LS51	
	Hitachi	HD74LS51	
		(Continued)	
SN74LS51	Motorola	SN74LS51	
	National	DM74LS51	
	SGS	T74LS51	
	Signetics	74LS51	
SN74LS54	Fairchild	74LS54	
	Hitachi	HD74LS54	
	Motorola	SN74LS54	
	National	DM74LS54	
	SGS	T74LS54	
	Signetics	74LS54	
SN74LS540	Fairchild	74LS540	
	Motorola	SN74LS540	
	Signetics	74LS540	
SN74LS541	Fairchild	74LS541	
	Motorola	SN74LS541	
	Signetics	74LS541	
SN74LS55	Fairchild	74LS55	
	Hitachi	HD74LS55	
	Motorola	SN74LS55	
	National	DM74LS55	
	SGS	T74LS55	
SN74LS604	Motorola	SN74LS604	
SN74LS605	Motorola	SN74LS605	
SN74LS606	Motorola	SN74LS606	
SN74LS607	Motorola	SN74LS607	
SN74LS621	Motorola	SN74LS621	
SN74LS622	Motorola	SN74LS622	
SN74LS640	Motorola	SN74LS640	
	Signetics	74LS640	
		N8T125	**876**
SN74LS641	Motorola	SN74LS641	
	Signetics	74LS641	
SN74LS642	Motorola	SN74LS642	
	Signetics	74LS642	
SN74LS643	Motorola	SN74LS643	
SN74LS644	Motorola	SN74LS644	
SN74LS645	**MMI**	**SN74LS645**	**804**
	Motorola	SN74LS645	
	Signetics	74LS645	
SN74LS645-1	MMI	74LS645-1	
	Signetics	SN74LS645-1	
SN74LS668	Motorola	SN74LS668	
SN74LS669	Motorola	SN74LS669	
SN74LS670	Fairchild	74LS670	
	Motorola	SN74LS670	
	National	DM74LS670	
	SGS	T74LS670	
	Signetics	74LS670	
SN74LS673	Motorola	SN74LS673	
SN74LS674	Motorola	SN74LS674	
SN74LS688	AMD	AM25LS2521	
SN74LS73A	Hitachi	HD74LS73	
	Motorola	SN74LS73A	
	National	DM74LS73	
	Signetics	74LS73	
SN74LS74A	Fairchild	74LS74	
	Hitachi	HD74LS74	
		HD74LS74A	
	Motorola	SN74LS74A	
	National	DM74LS74	
	SGS	T74LS74	
	Signetics	74LS74	
SN74LS75	Hitachi	HD74LS75	
	Motorola	SN74LS75	
	National	DM74LS75	
	Signetics	74LS75	
SN74LS76A	Hitachi	HD74LS76	
	Motorola	SN74LS76A	
	National	DM74LS76	
	Signetics	74LS76	
SN74LS78A	Hitachi	HD74LS78	
	Motorola	SN74LS78A	
	National	DM74LS78	
SN74LS795	Motorola	SN74LS795	
SN74LS796	Motorola	SN74LS796	
SN74LS83A	Fairchild	74LS83A	
	Hitachi	HD74LS183A	
		HD74LS83A	
	Motorola	SN74LS83A	
	National	DM74LS83A	
	Signetics	74LS83	
		74LS83A	
SN74LS85	Fairchild	74LS85	
	Hitachi	HD74LS85	
	Motorola	SN74LS85	
	National	DM74LS85	
	Signetics	74LS85	
SN74LS86	Fairchild	74LS86	
	Hitachi	HD74LS86	
	Motorola	SN74LS86	
	National	DM74LS86	
		(Continued)	
SN74LS86	SGS	T74LS86	
	Signetics	74LS86	
SN74LS90	Fairchild	74LS90	
	Motorola	SN74LS90	
	National	DM74LS90	
	SGS	T74LS90	
	Signetics	74LS90	
SN74LS91	Hitachi	HD74LS91	
	Motorola	SN74LS91	
SN74LS92	Fairchild	74LS92	
	Hitachi	HD74LS92	
	Motorola	SN74LS92	
	National	DM74LS92	
	SGS	T74LS92	
	Signetics	74LS92	
SN74LS93	Fairchild	74LS93	
	Hitachi	HD74LS93	
	Motorola	SN74LS93	
	National	DM74LS93	
	SGS	T74LS93	
	Signetics	74LS93	
SN74LS95B	Fairchild	74LS95B	
	Hitachi	HD74LS95B	
	Motorola	SN74LS95B	
	National	DM74LS95B	
	SGS	T74LS95B	
	Signetics	74LS95B	
SN74LS96	Signetics	74LS96	
SN74PL16L8	AMD	AMPAL26L8	
SN74PL16R4	AMD	AMPAL26R4	
SN74PL16R8	TI	SN74PL26R8	
SN74PL26R8	TI	SN74PL16R8	
SN74S00	Fairchild	74S00	
	Hitachi	HD74S00	
	National	DM74S00	
	Signetics	74S00	
SN74S02	Fairchild	74S02	
	Hitachi	HD74S02	
	National	DM74S02	
	Signetics	74S02	
	TI	**SN74S32**	**930**
SN74S03	Fairchild	74S03	
	Hitachi	HD74S03	
	National	DM74S03	
	Signetics	74S03	
SN74S04	Fairchild	74S04	
	Hitachi	HD74S04	
	National	DM74S04	
	Signetics	74S04	
SN74S05	Fairchild	74S05	
	Hitachi	HD74S05	
	National	DM74S05	
	Signetics	74S05	
SN74S08	Fairchild	74S08	
	Signetics	74S08	
SN74S10	Fairchild	74S10	
	Hitachi	HD74S10	
	National	DM74S10	
	Signetics	74S10	
SN74S109	Fairchild	74S109	
SN74S11	Fairchild	74S11	
	Hitachi	HD74S11	
	National	DM74S11	
	Signetics	74S11	
SN74S112	Fairchild	74S112	
	Hitachi	HD74S112	
	Motorola	SN74S112	
	National	DM74S112	
	Signetics	74S112	
SN74S113	Fairchild	74S113	
	Hitachi	HD74S113	
	National	DM74S113	
	Signetics	74S113	
SN74S114	Hitachi	HD74S114	
	National	DM74S114	
SN74S12	Hitachi	HD74S12	
SN74S132	Fairchild	74S132	
SN74S133	Fairchild	74S133	
	Hitachi	HD74S133	
	National	DM74S133	
	Signetics	74S133	
SN74S134	Hitachi	HD74S134	
	National	DM74S134	
	Signetics	74S134	
SN74S135	Fairchild	74S135	
	Hitachi	HD74S135	
	National	DM74S135	
	Signetics	74S135	
SN74S138	AMD	SN74S138	
	Fairchild	74S138	
	National	DM74S138	
	Signetics	74S138	

◆ Discontinued

The manufacturers report their devices can be used as direct replacements.
Performance details often differ, so compare the specifications considering your requirements.

Texas Instruments (Cont'd)

Manufacturer Device	Replacement Source	Device	IC Master Page
SN74S139	AMD	SN74S139	
	Fairchild	74S139	
	National	DM74S139	
	Signetics	74S139	
SN74S140	Fairchild	74S140	
	Hitachi	HD74S140	
	National	DM74S140	
	Signetics	74S140	
SN74S15	Fairchild	74S15	
	Hitachi	HD74S15	
	National	DM74S15	
SN74S151	AMD	SN74S151	
	Fairchild	74S151	
	Hitachi	HD74S151	
	National	DM74S151	
	Signetics	74S151	
SN74S153	AMD	SN74S153	
	Fairchild	74S153	
	Hitachi	HD74S153	
	National	DM74S153	
	Signetics	74S153	
SN74S157	AMD	SN74S157	
	Fairchild	74S157	
	Hitachi	HD74S157	
	National	DM74S157	
	Signetics	74S157	
SN74S158	AMD	SN74S158	
	Fairchild	74S158	
	Hitachi	HD74S158	
	National	DM74S158	
	Signetics	74S158	
SN74S168	Signetics	74S168	
SN74S169	Signetics	74S169	
SN74S174	AMD	SN74S174	
	Fairchild	74S174	
	Hitachi	HD74S174	
	National	DM74S174	
	Signetics	74S174	
SN74S175	AMD	SN74S175	
	Fairchild	74S175	
	Hitachi	HD74S175	
	National	DM74S175	
	Signetics	74S175	
SN74S181	AMD	SN74S181	
	Fairchild	93S41C	
	Hitachi	HD74S181	
	Signetics	74S181	
SN74S182	Fairchild	74S182	
	Hitachi	HD74S182	
	MMI	**SN74S182**	**819**
	National	DM74S182	
	Signetics	74S182	
SN74S189	AMD	AM27LS03	
		AM27S03	
		SN74S189	
	Fairchild	74S189	
		93405	
	Hitachi	HD74S189	
	National	DM74S189	
		DM7599	
		DM8599	
	Signetics	74S189	
SN74S194	AMD	SN74S194	
	Fairchild	74S194	
	Signetics	74S194	
SN74S195	AMD	SN74S195	
	Fairchild	74S195	
		93S00C	
	National	DM74S195	
	Signetics	74S195	
SN74S196	Signetics	74S196	
SN74S197	Signetics	74S197	
SN74S20	Fairchild	74S20	
	Hitachi	HD74S20	
	National	DM74S20	
	Signetics	74S20	
SN74S200	AMD	AM27LS00	
	Fairchild	93421	
		93L420	
		93L421	
	Intel	3106	
	Motorola	MC4256	
	National	93L420	
		93L421	
		DM74S200	
	NEC	μPB2200	
	Signetics	74200	
		N82S116	
		N82S16	
		(Continued)	

Manufacturer Device	Replacement Source	Device	IC Master Page
SN74S200	TI	SN74LS200	
		SN74S201	**993**
SN74S201	AMD	AM27LS00	
	Fairchild	93421	
		93L420	
		93L421	
	Intel	3106	
	Motorola	MC4256	
	National	93L420	
		93L421	
		DM74S200	
	NEC	μPB2200	
	Signetics	74200	
		N82S116	
		N82S16	
	TI	SN74LS200	
		SN74S200	
SN74S22	Fairchild	74S22	
	Hitachi	HD74S22	
	National	DM74S22	
SN74S240	AMD	SN74S240	
	MMI	**SN74S240**	**804**
	Signetics	74S240	
SN74S241	AMD	SN74S241	
	MMI	**SN74S241**	**804**
	Signetics	74S241	
SN74S244	**MMI**	**SN74S244**	**804**
SN74S251	AMD	SN74S251	
	Hitachi	HD74S251	
	National	DM74S251	
	Signetics	74S251	
SN74S257	AMD	SN74S257	
	Fairchild	74S257	
	Hitachi	HD74S257	
	National	DM7123	
		DM74S257	
		DM8123	
	Signetics	74S257	
SN74S258	AMD	SN74S258	
	Fairchild	74S258	
	Hitachi	HD74S258	
	Signetics	74S258	
SN74S280	Hitachi	HD74S280	
	National	DM74S280	
	Signetics	74S280	
SN74S281	National	DM74S281	
SN74S289	Fairchild	7489	
	Hitachi	HD7489	
		HD74S289	
	National	DM7489	
		DM74S289	
		DM8589	
		MM74S289	
	Signetics	74S289	
		N82S25	
SN74S30	Fairchild	74S30	
	National	DM74S30	
SN74S301	AMD	AM27LS01	
		AM29720	
	Fairchild	93411	
		93L411	
	Intel	3107	
	National	DM74S206	
		N82S117	
		N82S17	
	Signetics	74S301	
		N82S17	
	TI	SN74206	
SN74S314	AMD	AM93415	
	AMI	4015	
	Fairchild	93415	
	Fujitsu	MBM93415	
	Hitachi	HM2510	
		HM2511	
	Intel	2115A	
	Motorola	MCM2115	
	Signetics	N82S10	
		S82S10	
	TI	SN54S314	
SN74S32	Fairchild	74S02	
	Hitachi	HD74S02	
	National	DM74S02	
	Signetics	74S02	
	TI	**SN74S02**	**920**
SN74S37	Signetics	74S37	
SN74S373	**MMI**	**SN74S373**	**804**
	Signetics	74S373	
SN74S374	**MMI**	**SN74S374**	**804**
	Signetics	74S374	
SN74S40	Fairchild	74S40	
	Hitachi	HD74S40	
		(Continued)	

Manufacturer Device	Replacement Source	Device	IC Master Page
SN74S40	National	DM74S40	
	Signetics	74S40	
SN74S412	AMD	8212	
		AM3212	
	National	DP8212	
		INS8212	
	NEC	μPB8212	
SN74S428	AMD	8228	
	Intel	8228	
	National	DP8228	
		INS8228	
	NEC	μPB8228	
	TI	TIM8228	
SN74S438	AMD	8238	
	Intel	8238	
	National	DP8238	
		INS8238	
	NEC	μPB8238	
	TI	TIM8238	
SN74S51	Fairchild	74S51	
	Hitachi	HD74S51	
	National	DM74S51	
	Signetics	74S51	
SN74S571	AMD	AM27S13	
	Fairchild	93446	
	Harris	HM7621	
	Intel	3622	
	MMI	6306-1	
		63S241	**4026**
	Motorola	**MCM7621**	**4047**
	National	**DM74S571**	**4057**
	Raytheon	**29611**	**4131**
	Signetics	N82S131	
SN74S65	Fairchild	74S65	
	Hitachi	HD74S65	
	National	DM74S65	
SN74S74	Fairchild	74S74	
	Hitachi	HD74S74	
	National	DM74S74	
	Signetics	74S74	
SN74S85	Signetics	74S85	
SN74S86	Fairchild	74S86	
	Hitachi	HD74S86	
	National	DM74S86	
	Signetics	74S86	
SN75064	Mitsubishi	ULN-2064	
	Sprague	ULN-2064	
	TI	ULN2064	
	Toshiba	TD62064	
SN75065	Sprague	ULN-2065	
	TI	ULN2065	
SN75066	Sprague	ULN-2066	
	TI	ULN2066	
SN75067	Sprague	ULN-2067	
	TI	ULN2067	
SN75068	Motorola	ULN2068	
	Sprague	ULN-2068	
	TI	ULN2068	
SN75069	Sprague	ULN-2069	
	TI	ULN2069	
SN75074	Motorola	ULN2074	
	Sprague	ULN-2074	
	TI	ULN2074	
	Toshiba	TD62074	
SN75075	Sprague	ULN-2075	
	TI	ULN2075	
SN75107	Fairchild	75107	
	Motorola	MC75107	
	National	DS75107	
		LM75107A	
	TI	SN75107B	
SN75107A	Hitachi	HD75107A	
SN75108	Fairchild	75108	
	Motorola	MC75108	
	National	DS75108	
		LM75108A	
	TI	SN75108B	
SN75108A	Hitachi	HD75108A	
SN75109	Motorola	MC75109	
	TI	SN75109A	
SN75109A	Motorola	MC75109	
	TI	SN75109	
SN75110	Fairchild	75110	
	Hitachi	HD75110	
	Motorola	MC75110	
	National	LM75110	
	TI	SN75110A	
SN75114	Fairchild	96114	
		9614	
	TI	SN55114	
SN75115	Fairchild	96115	
		9615	
		(Continued)	

Manufacturer Device	Replacement Source	Device	IC Master Page
SN75115	TI	9615	
		SN55115	
SN75121	Motorola	MC8T13	
	National	DS75121	
		LM75121	
	Signetics	**N8T13**	**876**
	TI	N8T13	
SN75122	Motorola	MC8T14	
	National	DS75122	
		LM75122	
	Signetics	N8T14	
	TI	N8T14	
SN75123	Motorola	MC8T23	
	National	DS75123	
		LM75123	
	Signetics	**N8T23**	**876**
	TI	N8T23	
SN75124	Motorola	MC8T24	
	National	DS75124	
		LM75124	
	Signetics	**N8T24**	**876**
	TI	N8T24	
SN75125	**Motorola**	**MC75125**	**3064**
	National	DS75125	
SN75127	Motorola	MC75127	
	National	DS75127	
SN75128	Motorola	MC75128	
	National	DS75128	
SN75129	Motorola	MC75129	
	National	DS75129	
SN75138	SiliconG	SG75138	
SN75140	Motorola	MC75140	
SN75150	Fairchild	75150	
	National	DS75150	
SN75152	Fairchild	9627	
SN75154	Fairchild	75154	
	Hitachi	HD75154	
	National	DS75154	
	SiliconG	SG75154	
SN75160	National	DS75160	
SN75161	National	DS75161	
SN75162	National	DS75162	
SN75180	National	DS8800	
SN75182	National	DS8820	
		DS8880	
	TI	DS8820	
		SN75480	
SN75183	National	DS8830	
	TI	DS8830	
SN75188	AMD	MC1488	
	Exar	**XR1488**	**3384**
	Fairchild	μA1488	
	Hitachi	HD75188	
	Motorola	**MC1488**	**3064**
	National	DS1488	
	Raytheon	RM1488	
	Signetics	MC1488	
	SiliconG	SG1488	
	TI	MC1488	
SN75189	AMD	MC1489	
	Exar	XR1489	
	Fairchild	μA1489	
	Hitachi	HD75189	
	Motorola	**MC1489**	**3064**
	National	DS1489	
	Signetics	MC1489	
	SiliconG	SG1489	
	TI	SN85189	
SN75189A	**Exar**	**XR1489A**	**3384**
	Fairchild	μA1489A	
	Motorola	**MC1489A**	**3064**
	National	DS1489A	
	Signetics	MC1489A	
	SiliconG	SG1489A	
	TI	MC1489A	
SN7520	Fairchild	7520	
	Motorola	MC7520	
	SiliconG	SG7520	
SN75207B	National	DS75207	
SN75208B	National	DS75208	
SN7521	Fairchild	7521	
	Motorola	MC7521	
	National	LM7521	
	SiliconG	SG7521	
SN7522	Motorola	MC7522	
	SiliconG	SG7522	
SN75224	Fairchild	75S24	
	Hitachi	HA1902	
	Motorola	MC7524	
	National	DS75S24	
	Signetics	7524	
		(Continued)	

◆ Discontinued

Bold face device numbers indicate manufacturers data is provided in the IC Master on the pages noted.

Texas Instruments (Cont'd)

Manufacturer Device	Replacement Source	Device	IC Master Page
SN75224	SiliconG	SG7524	
	TI	SN7524	
SN7523	Motorola	MC7523	
	National	LM7523	
	Raytheon	RC7523	
	SiliconG	SG7523	
SN75234	Fairchild	75S234	
SN75235	Motorola	MC75235	
SN75236	SiliconG	SG75236	
SN7524	Fairchild	75S24	
	Hitachi	HA1902	
	Motorola	MC7524	
	National	DS75S24	
	Signetics	7524	
	SiliconG	SG7524	
	TI	SN75224	
SN7528	Motorola	MC7528	
	Raytheon	RC7528	
	SiliconG	SG7528	
	Thomson-CSF	SFC2528	
SN75322	National	DS75322	
SN75324	National	DS75324	
SN75325	Motorola	MC75325	
	National	DS75325	
	SiliconG	SG75325	
SN75361	National	DS75361	
	TI	SN75361A	
SN75362	National	DS75362	
SN75365	Motorola	MC75365	
	National	DS75365	
SN75368	Motorola	MC75358	
		MC75368	
SN75430	Fairchild	75430	
SN75437	Sprague	UDN-2541	
SN75450	Fairchild	75450	
	Motorola	MC75450	
	National	DS75450	
	SiliconG	SG75450	
SN75450A	Hitachi	HD75450A	
SN75451	Fairchild	75451	
	Motorola	MC75451	
	National	DS75451	
	SiliconG	SG75451	
SN75451A	Hitachi	HD75451A	
SN75452	Fairchild	75452	
	Hitachi	HD75452	
	Motorola	MC75452	
	National	DS75452	
	SiliconG	SG75452	
SN75453	Fairchild	75453	
	Hitachi	HD75453	
	Motorola	MC75453	
	National	DS75453	
		LM75453	
	SiliconG	SG75453	
SN75454	Motorola	MC75454	
	National	DS75454	
	SiliconG	SG75454	
SN75460	Motorola	MC75460	
	National	DS75460	
	SiliconG	SG75460	
SN75461	Fairchild	75461	
	Motorola	MC75401	
		MC75461	
	National	DS75461	
	SiliconG	SG75461	
SN75462	Fairchild	75462	
	Motorola	MC75402	
		MC75462	
	National	DS75462	
	SiliconG	SG75462	
SN75463	Motorola	MC75403	
		MC75463	
	National	DS75463	
	SiliconG	SG75463	
SN75464	Motorola	MC75404	
		MC75464	
	National	DS75464	
		SG75464	
	SiliconG	SG75464	
SN75467	RIFA	PBD352314	
	SiliconG	SG2002	
	Sprague	ULN-2022	
		ULS-2002	
SN75468	RIFA	PBD352313	
	Sprague	ULN-2023	
SN75469	RIFA	PBD352312	
	Sprague	ULN-2024	
SN75470	SiliconG	SG75470	
SN75471	National	DS3611	
		LM3611	
	Sprague	UDN-3611	
SN75472	National	DS3612	
		DS3632	
		LM3612	
	Sprague	UDN-3612	
SN75473	National	DS3613	
		LM3613	
	Sprague	UDN-3613	
SN75474	National	DS3614	
		LM3614	
	Sprague	UDN-3614	
SN75475	**Motorola**	**MC1472**	**3064**
	Sprague	UDN-5712	
		UDN-5722	
	TI	SN75477	
		UDN5712	
SN75476	**Motorola**	**MC1471**	
	Sprague	UDN-5711	
	TI	UDN5711	
SN75477	**Motorola**	**MC1472**	**3064**
	Sprague	UDN-5712	
		UDN-5722	
	TI	SN75475	
		UDN5712	
SN75478	Motorola	MC1473	
	Sprague	UDN-5713	
	TI	UDN5713	
SN75479	Motorola	MC1474	
	Sprague	UDN-5714	
	TI	UDN5714	
SN75480	National	DS8820	
		DS8880	
	TI	DS8820	
		SN75182	
SN75491	Fairchild	75491	
	Motorola	MC75491	
	National	DS75491	
SN75492	Fairchild	75492	
	Motorola	MC75492	
	National	DS75492	
SN75493	National	DS75493	
SN75494	National	DS75494	
SN75518	SMI	S4535	
	Sprague	UCN-5818	
SN75605	Sprague	UDN-2950	
SN76001	MCE	MCE-820	
	SGS	TBA820	
	Thomson-CSF	TBA820	
SN76111	Motorola	μA758	
	National	LM1800	
	RCA	CA758	
	Signetics	μA758	
	TI	SN76116	
SN76115	Exar	XR1310	
	Hitachi	HA1156	
	National	LM1310	
	RCA	CA1310	
	Sanyo	LA3301	
		LA3350	
	Sprague	ULN-3810	
	Toshiba	TA7157	
SN76116	Motorola	μA758	
	National	LM1800	
	RCA	CA758	
	Signetics	μA758	
	TI	SN76111	
SN76131	**Exar**	**XR4739**	**3378**
	Fairchild	μA739	
		μA749	
	National	LM1303	
	Raytheon	**RC4739**	**3592**
	SGS	TBA231	
	TI	SN76149	
SN76149	**Exar**	**XR4739**	**3378**
	Fairchild	μA739	
		μA749	
	National	LM1303	
	Raytheon	**RC4739**	**3592**
	SGS	TBA231	
	TI	SN76131	
SN76177	National	LM377	
SN76227	Motorola	MC1327	
		TDA1327	
SN76242	RCA	CA3070	
SN76243	RCA	CA3071	
SN76266	National	LM3066	
	RCA	CA3066	
SN76267	RCA	CA3067	
SN76489	GI	AY3-8913	
SN76600	Motorola	MC1350	
	Thomson-CSF	ESM1350	
SN76635	National	LM1820	
	RCA	CA3123	
SN76642	Motorola	MC1357	
	National	LM2111	
	RCA	CA2111	
	Signetics	N5111	
	Sprague	ULN-2111	
	TI	SN76643	
SN76643	Motorola	MC1357	
	National	LM2111	
	RCA	CA2111	
	Signetics	N5111	
	Sprague	ULN-2111	
	TI	SN76642	
SN76651	Motorola	MC1351	
SN76666	Motorola	M5140	
		MC1358	
	National	LM3064	
	RCA	CA3064	
		CA3065	
	Sanyo	LA1365	
SN76669	Fairchild	ULN-2136	
		μA2136	
	Motorola	MC1356	
	RCA	CA2136	
SN76675	National	LM3075	
	RCA	CA3075	
SN76676	RCA	CA3076	
SN76689	Hitachi	HA1137	
		HA1230	
	National	CA3089	
		LM3089	
	RCA	CA3089	
	Sanyo	LA1230	
		LA3089	
	SGS	TCA3089	
		TDA1200	
	Signetics	CA3089	
	Telefunken	U417	
SN85189	AMD	MC1489	
	Exar	XR1489	
	Fairchild	μA1489	
	Hitachi	HD75189	
	Motorola	**MC1489**	**3064**
	National	DS1489	
	Signetics	MC1489	
	SiliconG	SG1489	
	TI	SN75189	
TBP18S030	AMD	AM27LS19	
		AM27S19	
	Harris	HM7603	
	MMI	5331-1	
		53S081	**4026**
		6331-1	
		63S081	**4026**
	National	**DM74S288**	**4057**
		DM8578	
	Signetics	N82S123	
		S82S123	**532**
TBP18S030M	**National**	**DM54S288**	**4057**
		DM7578	
TBP18S2Z	Fujitsu	MB7118	
	MMI	6309	
	National	74S471	
TBP18SA030	AMD	AM27S18	
	Harris	HM7602	
	MMI	6330-1	
		63S080	**4026**
	National	**DM74S188**	**4057**
		DM7588	
		DM8577	
	Signetics	N82S23	
	TI	TBPSA030M	
TBP18SA2Z	Fujitsu	MB7117	
	MMI	6308	
	National	74S470	
TBP24S10	AMD	AM27S11	
		AM27S21	
	Harris	HM7611	
	Intersil	IM5623	
	MMI	6301-1	
		63S141	**4026**
	National	**DM74S287**	**4057**
	Signetics	N82S129	
TBP24S41	AMD	AM27S33	
	Fairchild	93453C	
	Fujitsu	MB7122	
	Harris	HM7643	
		HM7643A	
		(Continued)	
TBP24S41	MMI	5353-1	
		6353-1	
	Motorola	**MCM7643**	**4047**
	National	**DM74S573**	**4057**
	Signetics	N72HS137	
		N82S137	**4172**
		S82S195	**4182**
TBP24S41M	AMD	AM27S33M	
		AM27S41	**3907**
	Fairchild	93453M	
	Fujitsu	MB7122E-W	
		MB7152E-W	
	Harris	**HM7643-2**	**3948**
	MMI	**53S441**	**4026**
	Motorola	MCM7643M	
	National	**DM54S573**	**4057**
		DM54S573A	**4057**
	Signetics	S82HS137	
		S82S137	**532**
		S82S195	**4182**
TBP24S81	AMD	AM27S185	
	Fujitsu	MB7128	
	Harris	HM7685	
	Hitachi	HN25085	
	MMI	6389	
		6389-1	
		63S841	**4026**
	Motorola	**MCM7685**	**4047**
	National	**DM87S185**	**4057**
	Raytheon	29651	
		29651A	**4131**
	Signetics	N82HS185	
		N82S185	
TBP24S81M	Fujitsu	MB7128E-W	
	Harris	**HM7685-2**	**3950**
	MMI	5389	
		5389-1	
	National	**DM77S185**	**4057**
	Raytheon	29651AM	
	Signetics	S82HS185	
		S82S185	**532**
	TI	SN54S454	
TBP24SA10	AMD	AM27S20	
	Fairchild	93417	
	Harris	HM7610	
	MMI	6300-1	
		63S140	**4026**
	National	**DM74S387**	**4057**
	Signetics	N82S126	
TBP24SA10M	**Harris**	**HM7610-2**	**3944**
	Intel	M3601	
	MMI	5300-1	
		53S140	**4026**
	National	**DM54S387**	**4057**
	Signetics	**S82S126**	**532**
TBP24SA41	AMD	AM27S32	
	Fairchild	93452	
	Fujitsu	MB7121	
	Harris	HM7642	
	Hitachi	HN25044	
	MMI	6352-1	
	Motorola	MCM7642	
	National	**DM74S572**	**4057**
	NEC	μPB406	
	Signetics	N82S136	
TBP24SA41M	Fujitsu	MB7121E-W	
	Harris	**HM7642-2**	**3948**
	Intel	M3605	
	MMI	5352-1	
	National	**DM54S572**	**4057**
	Signetics	S82S136	
TBP24SA81	AMD	AM27S184	
	Fujitsu	MB7127	
	Harris	HM7684	
	Hitachi	HM25045	
	MMI	6388	
		6388-1	
	National	**DM87S184**	**4057**
	Signetics	N82S184	
TBP28L22	MMI	6309-1	
TBP28L22M	MMI	5309-1	
TBP28L86	Fairchild	93L451	
	Signetics	N82LS181	
		S82LS181	
TBP28LA22	MMI	6308-1	
TBP28LA22M	MMI	5308-1	
TBP28S166	AMD	AM27PS191	
		AM27S191	
	Fairchild	93511	
		93Z511	
	Fujitsu	MB7138	
		MB7138E-W	
		(Continued)	

◆ Discontinued

The manufacturers report their devices can be used as direct replacements.
Performance details often differ, so compare the specifications considering your requirements.

Texas Instruments (Cont'd)

Manufacturer Device	Replacement Source	Device	IC Master Page
TBP28S166	Harris	HM76161	
	Hitachi	HN25169	
	MMI	**63S1681**	**4026**
	Motorola	**MCM76161**	**4047**
	National	**DM87S191**	**4057**
	NEC	μPB429	
	Raytheon	**29681**	**4131**
		29681A	**4131**
	Signetics	N82S191	
TBP28S2708	Harris	HM7608	
	Signetics	N82S2708	
		S82S2708	**532**
TBP28S42	AMD	AM27S29	
	Fujitsu	MB7124	
	Harris	HM7649	
	MMI	6349-1	
	Motorola	**MCM7649**	**4047**
	National	**DM74S472**	**4057**
	Raytheon	**29621**	**4131**
	Signetics	N82S147	
	TI	**TBP28S42M**	**542,4244**
TBP28S42M	AMD	AM27S29	
	Fujitsu	MB7124	
	Harris	HM7649	
	MMI	6349-1	
	Motorola	**MCM7649**	**4047**
	National	**DM74S472**	**4057**
	Raytheon	**29621**	**4131**
	Signetics	N82S147	
	TI	**TBP28S42**	**542,4244**
TBP28S46	AMD	AM27S31	
	Fairchild	93448	
	Fujitsu	MB7126	
	Harris	HM7641	
	MMI	6341-1	
	Motorola	**MCM7641**	**4047**
	National	**DM74S474**	**4057**
	Signetics	N82S141	
TBP28S46M	Intel	M3624	
	MMI	5341-1	
	National	**DM54S474**	**4057**
	Signetics	**S82S141**	**532**
TBP28S86	AMD	AM27PS181	
		AM27S181	
		AM27S281	
	Fairchild	93Z451	
		F93451	
	Fujitsu	MB7132	
	Harris	HM7681	
	Hitachi	HN25089	
	Intel	3628	
		3628A	
		3628B	
	MMI	6381-1	
	Motorola	**MCM7681**	**4047**
	National	**DM87S181**	**4057**
		DM87S228	
	NEC	μPB417	
	Raytheon	29631	
		29631A	**4131**
		29633	
	Signetics	825181	
		N82HS181	
		N82S181	
	Supertex	SM82S181	
TBP28S86M	**AMD**	**AM27S181M**	**3905**
	Fairchild	93451M	
	Fujitsu	MB7132-W	
		MB7132E-W	
	Harris	**HM7681-2**	**3949**
	MMI	5381-1	
	National	**DM77S181**	**4057**
	Raytheon	29631AM	
	Signetics	S82HS181	
		S82S181	**532**
TBP28SA166	AMD	AM27S190	
	Fairchild	93510	
		93Z510	
	Fujitsu	MB7137	
		MB7137E-W	
	Harris	HM76160	
	Hitachi	HN25168	
	MMI	**63S1681**	**4026**
	Motorola	MCM6160	
	National	**DM87S190**	**4057**
	NEC	μPB409	
	Raytheon	**29683**	**4131**
	Signetics	N82S190	
TBP28SA42	AMD	AM27S28	
	Fujitsu	MB7123	
	MMI	6348-1	
	National	**DM74S473**	**4057**
	Signetics	N82S146	
TBP28SA46	AMD	AM27S30	
	Fairchild	93438	
	Harris	HM7640	
	MMI	6340-1	
	National	**DM74S475**	**4057**
		DM77S475	
		DM87S475	
	Signetics	N82S140	
TBP28SA86	AMD	AM27S180	
		AM27S280	
	Fairchild	93450	
		93Z450	
	Fujitsu	MB7131	
	Hitachi	HN25088	
	Intel	3608	
	MMI	6380-1	
	National	**DM87S180**	**4057**
		DM87S229	
	NEC	μPB408	
	Signetics	N82S180	
TBP28SA86M	Fujitsu	MB7131E-W	
	MMI	5380-1	
	National	**DM77S180**	**4057**
	Signetics	S82S180	
TBPSA030M	AMD	AM27S18	
	Harris	HM7602	
	MMI	6330-1	
		63S080	**4026**
	National	**DM74S188**	**4057**
		DM7588	
		DM8577	
	Signetics	N82S23	
	TI	TBP18SA030	
TCM2910	Intech	2910	
		2913	
TCM2910A	Intel	2910A	
TCM2911	Intech	2911	
TCM2912	GTEMicro	G8912	
	Intel	2912	
		ID2912	
	Mostek	MK5912	
		MK8912	
	National	TP3040	
	Plessey	MV8912	
	TI	TCM2912B	
TCM2912B	GTEMicro	G8912	
	Intel	2912	
		ID2912	
	Mostek	MK5912	
		MK8912	
	National	TP3040	
	Plessey	MV8912	
	TI	TCM2912	
TCM2913	Intel	2913	
TCM2914	Intech	2914	
TCM5087	AMI	S2859	
	GI	AY5-9559	
	Mitel	MT5087	
	Mostek	MK5087	
	National	TP5087	
	Plessey	MV5087	
TCM5089	**AMI**	**S25089**	**3340**
	Mitel	MT5089	
	Mostek	MK5089	
	National	TP5089	
	Plessey	MV5089	
TCM5091	Mitel	MT5091	
	Mostek	MK5091	
TCM5092	Mitel	MT5092	
	Mostek	MK5092	
	National	TP5092	
TIED461	Motorola	MFQD2404	
TIED463	Motorola	MFQD2405	
TIM8228	AMD	8228	
	Intel	8228	
	National	DP8228	
		INS8228	
	NEC	μPB8228	
	TI	**SN74S428**	**1034**
TIM8238	AMD	8238	
	Intel	8238	
	National	DP8238	
		INS8238	
	NEC	μPB8238	
	TI	**SN74S438**	**1034**
TL071	Thomson-CSF		
		TDB0351	
TL072	Exar	XR072	
	Fairchild	μAF772	
	PMI	OP-25	
TL074	Exar	XR074	
	Harris	LF347	
	Motorola	MC34004	
	National	LF347	
	TI	TL084C	
	Thomson-CSF		
		TDB0084	
		TDB0084A	
		TDB0347	
TL080	**RCA**	**CA080**	**3596**
TL081	Fairchild	μAF771	
	PMI	OP-16	
	RCA	**CA081**	**3596**
	Thomson-CSF		
		TDB0351	
TL081AC	Motorola	MC34001B	
TL081C	Motorola	MC34001	
TL081M	Motorola	MC35001B	
TL082	**Exar**	**XR082**	**3376**
	RCA	**CA082**	**3596**
	Thomson-CSF		
		TDB0353	
TL082AC	Motorola	MC34002B	
TL082BC	Motorola	MC34002A	
TL082C	Motorola	MC34002	
TL082M	Motorola	MC35002B	
~~TL083~~	~~Exar~~	~~XR083~~	~~3376~~
	RCA	**CA083**	**3596**
TL084	**Exar**	**XR084**	**3377**
	Fairchild	μAF774	
	RCA	**CA084**	**3596**
TL084AC	Motorola	MC34004B	
TL084BC	Motorola	MC34004A	
TL084C	Exar	XR074	
	Harris	LF347	
	Motorola	MC34004	
	National	LF347	
	TI	TL074	
	Thomson-CSF		
		TDB0084	
		TDB0084A	
		TDB0347	
TL084M	Motorola	MC35004	
TL087	AnalogSys	TL087	
TL088	AnalogSys	TL088	
TL182	Intersil	DG182	
	Siliconix	DG182	
TL185	Harris	HI5045	
	Intersil	DG185	
		IH5045	
	Siliconix	DG185	
		DG5045	
TL188	Harris	HI5042	
	Intersil	DG188	
		IH5042	
	Siliconix	DG188	
		DG5042	
TL431	Fairchild	μA431	
	Motorola	TL431	
TL493	Motorola	TL493	
	Unitrode	**UC493A**	**3709**
TL494	Sprague	ULN-8194	
		ULS-8194	
		ULS8194	
	TI	TL594	
	Unitrode	UC494	
TL495	Sprague	ULN-8195	
		ULS-8195	
		ULS8195	
	TI	TL595	
	Unitrode	**UC495**	**3709**
TL514	Motorola	MC1514	
	National	LM1514	
TL594	Sprague	ULN-8194	
		ULS-8194	
		ULS8194	
	TI	TL494	
	Unitrode	UC494	
TL595	Sprague	ULN-8195	
		ULS-8195	
		ULS8195	
	TI	TL495	
	Unitrode	**UC495**	**3709**
TL720	Motorola	MC1414	
	National	LM1414	
	TI	TL514	
TMS2147	AMD	AM2147	
	AMI	4017	
	Fujitsu	MBM2147	
		(Continued)	
TMS2147	Hitachi	HM4847	
	Intel	2147	
	Intersil	IM2147	
	ITT	4547	
	Motorola	MCM2147	
	National	MM2147	
	NEC	μPD2147	
	Synertek	SY2147	
	Toshiba	TMM315	
	Universal	UM2147	
TMS2167	AMD	AM2167	
	Hitachi	HM6167	
	IMS	IMS1400	
	IDT	IDT6167	
	Intel	2167	
	ITT	2167	
	Mitel	M58757	
	Mitsubishi	M5M2167	
	NEC	**μPD2167**	**4086**
	Synertek	**SY2167**	**4210**
TMS2168	AMD	AM2168	
		AM2169	
	Fujitsu	MB8168	
	Hitachi	HM6168	
	IMS	IMS1420	
		IMS1421	
	Intel	2168	
	Mitsubishi	M5M2168	
	Synertek	**SY2168**	**4210**
	TI	TMS2169	
TMS2169	AMD	AM2168	
		AM2169	
	Fujitsu	MB8168	
	Hitachi	HM6168	
	IMS	IMS1420	
		IMS1421	
	Intel	2168	
	Mitsubishi	M5M2168	
	Synertek	**SY2168**	**4210**
	TI	TMS2168	
TMS2508	Harris	HM6758	
	TI	TMS2758	
TMS2516	AMD	AM2716	
	Fujitsu	MB2716	
	Hitachi	HN462716	
	Intel	2716	
	Mostek	MK2716	
	Motorola	MCM2716	
	National	MM2716	
	NEC	μPD2716	
	OKI	**MSM2716**	**4118**
	Panasonic	MN2716	
	SGS	M2716	
TMS2532	Hitachi	HN462532	
	Motorola	MCM2532	
	National	MM2532	
		NMC2532	
		TDA2530	
		TDA2532	
	Plessey	TDA2530	
	Siemens	TDA2530	
	SiliconG	SG2532	
	Universal	UM2532	
TMS2564	GTEMicro	G5365	
	National	NMC2564	
	VTI	**VT2366**	**4251**
TMS2708	AMD	AM2708	
	Hitachi	HN462708	
	Motorola	MC27A08	
		MCM2708	
	National	MM2708	
	Panasonic	MN2708	
	Rockwell	2708	
TMS2758	Harris	HM6758	
	TI	TMS2508	
TMS4016	**AMD**	**AM9128**	**3917**
	Fairchild	F3528	
	Fujitsu	MB8128	
	Intel	2128	
	Motorola	MCM2016	
	National	NMC2116	
	OKI	**MSM5128**	**4118**
	Synertek	SY2128	
		SY2129	
	Toshiba	TMM2016	
TMS4043	AMD	AM2112	
		AM9112	
	Synertek	SY2112	
TMS4044	EMM-SESCO	4044	
	Intel	2141	
		2141A	
	Intersil	IM7141	
		(Continued)	

◆ Discontinued

Bold face device numbers indicate manufacturers data is provided in the IC Master on the pages noted.

© IC MASTER 1984

Texas Instruments (Cont'd)

Manufacturer Device	Replacement Source	Device	IC Master Page
TMS4044	Mostek	MK4104	
	Motorola	MCM6641	
	National	MM2141	
	NEC	μPD4104	
	Zilog	Z6104	
TMS4108-15	National	MM5298	
TMS4116	AMD	AM9016	
	Fairchild	F4116	
	Hitachi	HM4716	
	Intel	2118	
	Intersil	IM7116	
	ITT	ITT4116	
	Mostek	MK4116	
	Motorola	MCM4116	
	National	MM5290	
	NEC	**μPD416**	**4073**
	Panasonic	MN4116	
	SGS	M4116	
	Siemens	HYB4116	
	Signetics	2690	
TMS4164	Fairchild	F4164	
		F64K	
	Fujitsu	MB8264	
		MB8266	
	Hitachi	HM4864	
	IMS	IMS2600	
	Intel	2164	
	Motorola	MCM6665	
	National	NMC4164	
	NEC	μPD4164	
	OKI	MSM3764	
	Toshiba	TMM4164	
TMS4416	Fujitsu	MB81416	
	IMS	IMS2620	
TMS4500	VTI	VL4500	
TMS4500A	**VTI**	**VL4500A**	**4254**
TMS4501	VTI	VL4501	
TMS4516	Hitachi	HM4816	
		HM4816A	
	Intel	2118	
	Intersil	IM7118	
	Mostek	**MK4516**	
	National	NMC5295	
	NEC	μPD2118	
TMS4732	AMD	AM9232	
	AMI	S68322	
		S68A332	
	Fairchild	F3532	
	GI	R094132	
		T094132	
	GTEMicro	2332	
	Hitachi	HN46332	
	Intersil	IM7332	
	Motorola	MC68332	
		MCM68332	
		MCM68A332	**4048**
	National	MM52132	
	NCR	2332	
		NCR2332	
	NEC	**μPD2332**	**4100**
	OKI	**MSM2932**	**4118**
	RCA	**CDM5333**	**1593**
	Rockwell	R2332	
	SiliconG	SG3532	
	SSS	SCM23C32	
	SMC	ROM4732	
	Synertek	**SY2332**	**4211**
	Toshiba	TM2332	
		TMM333	
	Universal	UM2332	
	VTI	**VT2332**	**4249**
TMS4764	AMI	S68364	
	GI	R09464	
	GTEMicro	G5364	
	Intersil	IM7364	
	MicroPwr	MP2364	
	Mitsubishi	M5L2364	
	Mostek	MK36000	
	Motorola	**MCM68364**	
			4048,4054
	National	MM5235	
	NCR	NCR2364	
	RCA	**CDM5364**	**1593**
	SMOS	SMM2364	
	SGS	M36000	
	Signetics	2664A	
	SSS	SCM23C64	
		SCM23C65	
	SMC	ROM36000	
	Synertek	**SY2364**	**4211**

(Continued)

Manufacturer Device	Replacement Source	Device	IC Master Page
TMS4764	Toshiba	TM2364	
	VTI	**VT2364**	**4250**
TMS7000	GI	PIC7000	
TMS7020	GI	PIC7020	
TMS7040	GI	PIC7040	
TMS7041	GI	PIC7041	
TMS70C00	GI	PIC70C00	
TMS70C20	GI	PIC70C20	
TMS8080	AMD	9080	
		9080A	
		AM9080	
	Intel	8080A	
	National	DP8080A	
		INS8080A	
	NEC	μPD8080	
	TI	TMS8080A	
TMS8080A	AMD	9080	
		9080A	
		AM9080	
	Intel	8080A	
	National	DP8080A	
		INS8080A	
	NEC	μPD8080	
	TI	TMS8080	
TMS9900	**AMI**	**S9900**	**1453**
TMS99000	**AMD**	**AMPAL22V10**	**4600**
	AMI	S99000	
TMS9901	AMI	S9901	
TMS9902	AMI	S9902	
TMS9903	AMI	S9903	
TMS9904	AMI	S9904	
TMS9927	SSS	SND5027	
	SMC	CRT5027	
TMS9940	AMI	S9940	
TMS9980	AMI	S9980	
TMS9981	AMI	S9981	
TMS9995	AMI	S9995	
TP4000 series	Fairchild	34XXX	
		F4XXX	
	Hitachi	HD14XXX	
	Motorola	MC14XXX	
	National	CD4XXX	
	OKI	MSM4XXX	
	RCA	CD4XXX	
	SGS	HCF4XXX	
	SSS	SCL4XXX	
	Solitron	CM4XXX	
	Toshiba	TC4XXX	
UCN4810	**AMI**	**S4534**	**2811**
	Sprague	UCN-4810	
		UCN-4810A	
UDN2841	SiliconG	SG2841	
	Sprague	UDN-2841	
UDN2845	Sprague	UDN-2845	
UDN5711	Motorola	MC1471	
	Sprague	UDN-5711	
	TI	SN75476	
UDN5712	**Motorola**	**MC1472**	**3064**
	Sprague	UDN-5712	
		UDN-5722	
	TI	SN75475	
		SN75477	
UDN5713	Motorola	MC1473	
	Sprague	UDN-5713	
	TI	SN75478	
UDN5714	Motorola	MC1474	
	Sprague	UDN-5714	
	TI	SN75479	
ULN2001	Exar	XR2001	
		XR2201	
	Fairchild	9665	
	Motorola	**MC1411**	**3064**
		ULN2001	
		XR2201	
	NEC	μPA2001	
	RIFA	PBD352301	
	Sanyo	LB1231	
	SGS	L201	
	SiliconG	SG2001	
	Sprague	ULN-2001	
		ULN-2021	
		ULQ-2002	
		ULS-2001	
	Toshiba	TD62001	
ULN2002	Exar	XR2002	
		XR2202	
	Fairchild	9666	
		MC1412	
	Motorola	**MC1412**	**3064**
		ULN2002	
	NEC	μPA2002	
	RIFA	PBD352304	

(Continued)

Manufacturer Device	Replacement Source	Device	IC Master Page
ULN2002	Sanyo	LB1232	
	SGS	L202	
	Signetics	NE5602	
	Sprague	ULN-2002	
		ULQ-2003	
	Toshiba	TD62002	
ULN2003	Exar	XR2003	
		XR2004	
		XR2203	
	Fairchild	9667	
		MC1413	
	Mitsubishi	M54523	
	Motorola	**MC1413**	**3064**
		ULN2003	
	Sanyo	LB1233	
	SGS	L203	
	Signetics	NE5603	
		ULN2003	
	SiliconG	SG2003	
	Sprague	ULN-2003	
		ULQ-2003	
		ULQ-2004	
		ULS-2003	
		ULS-2004	
	Toshiba	TD62003	
ULN2004	Exar	XR2204	
	Fairchild	9668	
	Mitsubishi	M54526	
	Motorola	**MC1416**	**3064**
		ULN2004	
	Sanyo	LB1234	
	SGS	L204	
	Signetics	NE5604	
		ULN2004	
	SiliconG	SG2004	
	Sprague	ULN-2004	
		ULS2004	
	Toshiba	TD62004	
ULN2005	Exar	XR2205	
	Sprague	ULN-2005	
ULN2064	Mitsubishi	ULN-2064	
	Sprague	ULN-2064	
	TI	SN75064	
	Toshiba	TD62064	
ULN2065	Sprague	ULN-2065	
	TI	SN75065	
ULN2066	Sprague	ULN-2066	
	TI	SN75066	
ULN2067	Sprague	ULN-2067	
	TI	SN75067	
ULN2068	Motorola	ULN2068	
	Sprague	ULN-2068	
	TI	SN75068	
ULN2069	Sprague	ULN-2069	
	TI	SN75069	
ULN2074	Motorola	ULN2074	
	Sprague	ULN-2074	
	TI	SN75074	
	Toshiba	TD62074	
ULN2075	Sprague	ULN-2075	
	TI	SN75075	
XR4151	**Exar**	**XR4151**	**3385**
	Raytheon	RC4151	
		RM4151	
		RV4151	
μA2240	Exar	XR2240	
	Fairchild	μA2240	
	Intersil	ICL8240	
μA709	Fairchild	μA709	
	Hitachi	HA1303	
	Motorola	MC1709	
	National	LM1709	
		LM709	
	NEC	μPC255	
		μPC55	
	Raytheon	RC709	
		RM709	
	RCA	CA3038	
	Thomson-CSF		
		SFC2709	
	Toshiba	TA7502	
μA710	Fairchild	μA710	
	Motorola	LM710	
		MC1710	
	National	LM710	
	PMI	CMP-01	
		CMP-02	
	SiliconG	SG710	
	Thomson-CSF		
		SFC2710	
μA711	Fairchild	μA711	
	Motorola	MC1711	

(Continued)

Manufacturer Device	Replacement Source	Device	IC Master Page
μA711	National	LM711	
	SiliconG	SG711	
	Thomson-CSF		
		SFC2711	
μA723	Fairchild	μA723	
	Hitachi	HA17723	
	Intersil	LM723	
	Motorola	**MC1723**	**3532**
	National	LM723	
	Raytheon	RC723	
		RM723	
	RCA	**CA723**	**3602**
		LM723	
	SGS	L123	
	Signetics	μA723	
	SiliconG	SG723	
	Thomson-CSF		
		SFC2723	
μA733	Fairchild	μA733	
	Hitachi	HA17733	
	Intersil	μA733	
	Motorola	MC1733	
		NE592	
	National	LM733	
	Signetics	μA733	
	SiliconG	SG733	
μA741	**AD**	**AD741**	**3351**
	Fairchild	3871	
		μA741	
	Hitachi	HA17741	
	Intersil	AD741	
		ICL741	
	MicroPwr	MP5501	
		MP5502	**3529**
		OP-02	**3529**
	Mostek	MK3871	
	Motorola	LM741	
		MC1741	
	National	LM741	
	NEC	μPC151	
		μPC741	
	PMI	OP-01	
		OP-02	**3566**
		PM741	
		SSS741	
	Raytheon	RC741	
		RM741	
	RCA	CA3056	
		CA741	
	Signetics	μA741	
	SiliconG	SG300	
		SG741	
	Thomson-CSF		
		SFC2741	
	Toshiba	TA7504	
μA747	AMD	747	
	Fairchild	μA747	
	Hitachi	HA17747	
	MicroPwr	MPOP04	
	Motorola	MC1747	
	National	LM747	
	NEC	μPC251	
	PMI	**OP-04**	**3566**
		PM747	
	Raytheon	RC747	
		RM747	
	RCA	CA747	
	Signetics	μA747	
	SiliconG	SG747	
	TeledyneS	747	
μA747-1	Fairchild	μA747-1	
μA748	AMD	LM201	
	AD	AD201	
	Fairchild	μA201	
		μA748	
	Intersil	LM748	
		μA748	
	Motorola	LM201	
		MC1748	
	National	LM201	
		LM748	
	Plessey	SL748	
	RCA	CA201	
		CA748	
		LM748	
	SiliconG	SG201	
		SG748	
	TI	LM201	
		SN72748P	
	Thomson-CSF		
		SFC2201	
		SFC2748	

◆ Discontinued

The manufacturers report their devices can be used as direct replacements.
Performance details often differ, so compare the specifications considering your requirements.

Texas Instruments (Cont'd)

Manufacturer Device	Replacement Source	Device	IC Master Page
μA777	Intersil	μA777	
	SiliconG	SG777	
μA7805	AMD	LM309	
	Fairchild	μA309	
		μA7805	
	Lambda	LLM309	
		LMC7805	
		LμA7805	
	Motorola	LM309	
		MC7805	**3531**
	National	LM309	
		LM7805	
	NEC	μPC7805	
	SGS	L7805	
		L7810	
	SiliconG	SG309	
		SG340-05	
		SG340-5	
	Thomson-CSF		
		SFC2309	
	Toshiba	TA78005	
μA7806	Fairchild	μA7806	
	Lambda	LMC7806	
		LμA7806	
	Motorola	**MC7806**	**3531**
	SiliconG	SG340-6	
		SG7806	
μA7808	Fairchild	μA7808	
	Lambda	LMC7808	
		LμA7808	
	Motorola	**MC7808**	**3531**
	NEC	μPC7808	
	SiliconG	SG340-8	
		SG7808	
	TI	LM340-8	
μA7812	Fairchild	μA7812	
	Lambda	LMC7812	
		LμA7812	
	Motorola	**MC7812**	**3531**
	National	LM7812	
	NEC	μPC7812	
	SGS	L7812	
	SiliconG	SG7812	
	Toshiba	TA78012	
μA7815	Fairchild	μA7815	
		μA78L15	
	Lambda	LMC7815	
		LμA7815	
	Motorola	**MC7815**	**3531**
		MC78L15	
	National	LM340-15	
		LM340LA-15	
		LM340T-15	
		LM7815	
		LM78L15	
	NEC	μPC7815	
		μPC78L15	
	SGS	L7815	
	SiliconG	SG340-15	
		SG7815	
	TI	LM340-15	
		μA78L15	
	Thomson-CSF		
		SFC2815	
	Toshiba	TA78015	
μA7818	Fairchild	μA7818	
	Lambda	LMC7818	
	NEC	μPC7818	
	SiliconG	SG340-18	
		SG7818	
	TI	LM340-18	
μA7824	Fairchild	μA7824	
	Lambda	LMC7824	
		LμA7824	
	Motorola	**MC7824**	**3532**
	NEC	μPC7824	
	SGS	L7824	
	SiliconG	SG7824	
	TI	LM340-24	
μA78L02	Fairchild	μA78L02	
	Motorola	MC7802	
μA78L02A	Fairchild	μA78L02A	
μA78L05	Fairchild	μA78L05	
	~~Motorola~~	~~MC78L05~~	
	National	LM340LA-5	
		LM78L05	
	NEC	μPC78L05	
	Thomson-CSF		
		SFC2805	
μA78L05A	Fairchild	μA78L05A	
μA78L06	Fairchild	μA78L06	
	Motorola	MC78L06	
	TI	μA87L06	
μA78L06A	Fairchild	μA78L06A	
μA78L08	Motorola	MC78L08	
	NEC	μPC78L08	
μA78L08A	Fairchild	μA78L08A	
μA78L09A	Fairchild	μA78L09A	
μA78L10A	Fairchild	μA78L10A	
μA78L12	Fairchild	μA78L12	
	Motorola	MC78L12	
	National	LM340LA-12	
		LM78L12	
	NEC	μPC78L12	
	Thomson-CSF		
		SFC2812	
μA78L12A	Fairchild	μA78L12A	
μA78L15	Fairchild	μA7815	
		μA78L15	
	Lambda	LMC7815	
		LμA7815	
	Motorola	**MC7815**	**3531**
		MC78L15	
	National	LM340-15	
		LM340LA-15	
		LM340T-15	
		LM7815	
		LM78L15	
	NEC	μPC7815	
		μPC78L15	
	SGS	L7815	
	SiliconG	SG340-15	
		SG7815	
	TI	LM340-15	
		μA7815	
	Thomson-CSF		
		SFC2815	
	Toshiba	TA78015	
μA78L15A	Fairchild	μA78L15A	
μA78M05	Fairchild	μA78M05	
	Motorola	MC78M05	
	National	LM341-5	
		LM342-05	
		LM78M05	
	NEC	μPC78M05	
	Sanyo	L78M05	
μA78M06	Fairchild	μA78M06	
	Motorola	MC78M06	
	Sanyo	L78M06	
μA78M08	Fairchild	μA78M08	
	Motorola	MC78M08	
	NEC	μPC78M08	
	Sanyo	L78M08	
μA78M10	Fairchild	μA78M10	
μA78M20	Motorola	MC78M20	
μA78M24	Fairchild	μA78M24	
	Motorola	MC78M24	
	Sanyo	L78M24	
μA7905	Fairchild	μA7905	
		μA79M05	
	Lambda	LMC7905	
		LμA7905	
	Motorola	MC7905	
	National	LM320MP5	
		LM7905	
		LM79M05	
	SiliconG	SG120-5	
		SG320-05	
		SG320P-5	
		SG7905	
μA7906	Lambda	LMC7906	
	Motorola	MC7906	
μA7908	Fairchild	MC7908	
		μA7908	
		μA79M08	
	Lambda	LMC7908	
		LμA7908	
	Motorola	MC7908	
	SiliconG	SG7908	
	TI	μA79M08	
μA7912	Fairchild	μA7912	
		μA79M12	
	Lambda	LμA7912	
	Motorola	MC7912	
	National	LM320MP12	
		LM7912	
		LM79M12	
	SiliconG	SG320P-12	
		SG7912	
	TI	LM320-12	
	Thomson-CSF		
		TDB2912	
μA7915	Fairchild	μA7915	
	Lambda	LμA7915	
	Motorola	MC7915	
	National	LM320-15	
		LM320T15	
		LM7915	
	SiliconG	SG320-15	
		SG7915	
	TI	LM320-5	
	Thomson-CSF		
		TDB2915	
μA7918	Lambda	LμA7918	
	Motorola	MC7918	
μA7924	Lambda	LMC7924	
	Motorola	MC7924	
μA79M06	Fairchild	μA79M06	
μA79M08	Fairchild	MC7908	
		μA7908	
		μA79M08	
	Lambda	LMC7908	
		LμA7908	
	Motorola	MC7908	
	SiliconG	SG7908	
	TI	μA7908	
μA87L06	Fairchild	μA78L06	
	Motorola	MC78L06	
	TI	μA78L06	
μA9636	Fairchild	μA9636	
μA9636A	Fairchild	μA9636A	
μA9637	~~Fairchild~~	~~μA9637~~	
μA9637A	Fairchild	μA9637A	
μA9638	Fairchild	μA9638	
μAA170	Siemens	μAA170	
μAA171	Siemens	μAA171	

Thomson-CSF Components Corporation

Manufacturer Device	Replacement Source	Device	IC Master Page
EF6800	Fairchild	F6800A	
	Hitachi	HD6800	
		HD68A00	
		HD68B00	
	Motorola	**MC6800**	**1505,2045**
EF68000	Hitachi	HD68000	
	Mostek	MK68000	
	Motorola	MC68000	
	Rockwell	R68000	
	Signetics	**SCN68000**	**1689,1690**
EF6802	AMI	S6802	
	Fairchild	**F6802**	**1461**
	Hitachi	HD6802	
	Motorola	**MC6802**	**1505,2045**
EF6805	**AMI**	**S6805**	**1451**
	Hitachi	HD6805	
	Motorola	MC6805	
EF6806	AMI	S6808	
	Fairchild	**F6808**	**1461**
	Hitachi	HD6808	
	Motorola	**MC6808**	**1505**
EF6809	**AMI**	**S6809**	**1448**
	Hitachi	HD6809	
		HD68A09	
		HD68B09	
	Motorola	**MC6809**	**1505,2045**
EF6810	AMI	S6810	
	Fairchild	**F6810**	**1461**
	Hitachi	HD6810	
		HD68A10	
	Motorola	MC6810	
		MCM6810	**1505,4046**
EF6840	AMI	S6840	
	Fairchild	**F6840**	**1462**
	Hitachi	HD46840	
		HD6840	
		HD68A40	
		HD68B40	
	Motorola	**MC6840**	**1505**
EF6850	AMI	S1602	
	Fairchild	3730	
		F6850	**1463**
	Fujitsu	MB8868A	
	GI	AY3-1015	
	~~Hitachi~~	~~HD6850~~	
		HD68A50	
	Motorola	**MC6850**	**1505**
	National	MM5303	
	RCA	**CDP6402**	**1595**
	SMC	COM2017	
		COM2502H	
		COM8017	
		(Continued)	
EF6850	Western	TR1402	
		TR1602	
		TR1863	
EF6852	AMI	S6852	
	Fairchild	**F6852**	**1464**
	Hitachi	HD6852	
		HD68A52	
	Motorola	**MC2652**	**1511**
		MC6852	**1505**
		MC68652	**1506,1511**
	SSS	SND5025	
	SMC	COM5025	
ESM1350	Motorola	MC1350	
	TI	SN76600	
SFC2018	National	LM3018	
	RCA	**CA3018**	**3601**
SFC2036	RCA	CA3036	
SFC2054	Fairchild	μA3054	
	Motorola	CA3054	
	National	LM3054	
	RCA	CA3054	
	SiliconG	SG3822	
	Sprague	ULN-2054	
SFC2101	AMD	LM101	
	AD	AD101	
	Fairchild	μA101	
	Intersil	AD101	
	LinearTech	LM101	
	Motorola	LM101	
	Raytheon	LM101	
	SiliconG	SG101	
	TI	LM101	
SFC2104	National	LM104	
SFC2105	AMD	LM105	
	Fairchild	μA105	
	Intersil	LM105	
	National	LM105	
	SiliconG	SG105	
SFC2107	AMD	LM107	
	AD	**AD741S**	**3351**
	Intersil	LM107	
	LinearTech	LM107	
	National	LM107	
	Raytheon	LM107	
	SiliconG	SG107	
	TI	LM107	
SFC2109	Fairchild	μA109	
	Motorola	LM109	
	National	LM109	
	SiliconG	SG109	
	TI	SN55109	
SFC2111	AMD	LM111	
	AD	AD111	
	Fairchild	μA111	
	Intersil	LM111	
	Motorola	LM111	
	National	LM111	
	Raytheon	LM111	
	Signetics	LM111	
	SiliconG	SG111	
	TI	LM111	
SFC2201	AMD	LM201	
	AD	AD201	
	Fairchild	μA201	
		μA748	
	Intersil	LM748	
		μA748	
	Motorola	LM201	
		MC1748	
	National	LM201	
		LM748	
	Plessey	SL748	
	RCA	CA201	
		CA748	
		LM748	
	SiliconG	SG201	
		SG748	
	TI	LM201	
		SN72748P	
		μA748	
	Thomson-CSF		
		SFC2748	
SFC2204	~~National~~	~~LM204~~	
	SiliconG	SG204	
SFC2205	AMD	LM205	
	National	LM205	
	SiliconG	SG205	
SFC2207	AMD	LM207	
	National	LM207	
	RCA	CA207	
		(Continued)	

◆ Discontinued

Bold face device numbers indicate manufacturers data is provided in the IC Master on the pages noted.

Thomson-CSF Components Corporation (Cont'd)

Manufacturer Device	Replacement Source	Device	IC Master Page
SFC2207	SiliconG	SG207	
	TI	SN55207	
SFC2208	AMD	LM208	
	AD	**AD208**	**3351**
	Fairchild	μA208	
	LinearTech	OP-05	
	MicroPwr	MP5505	
		MP5508	**3529**
		MPLM208	**3529**
	Motorola	LM208	
	National	LM208	
	PMI	**OP-05**	**3566**
		PM208	
	~~Raytheon~~	~~OP-05~~	~~3592~~
	SiliconG	SG208	
	TI	μA714	
SFC2209	AMD	LM209	
	Fairchild	μA209	
	Lambda	LLM209	
	Motorola	LM209	
	National	LM209	
	SiliconG	SG209	
SFC2210	AMD	LM210	
	National	LM210	
	SiliconG	SG210	
SFC2211	AMD	LM211	
	AD	AD211	
	Motorola	LM211	
	National	LM211	
	RCA	LM211	
	Signetics	LM211	
	SiliconG	SG211	
	TI	LM211	
SFC2301	AD	AD301	
	Fairchild	μA301A	
	Intersil	AD301	
	LinearTech	LM301	
		LM301A	
	Motorola	LM301	
	National	LM301	
		~~LM301A~~	
	NEC	μPC157	
		μPC301	
	Raytheon	LM301	
	RCA	CA301	
		LM301	
	SiliconG	SG301	
	TI	LM301	
		LM301A	
	Toshiba	TA7506	
SFC2304	National	LM304	
	NEC	μPC142	
	SiliconG	SG304	
SFC2305	AMD	LM305	
	Fairchild	μA305	
	Intersil	LM305	
	National	LM305	
	NEC	μPC141	
	SiliconG	SG305	
SFC2307	AMD	LM307	
	AD	**AD741J**	**3351**
	Intersil	LM307	
	LinearTech	LM307	
	Motorola	LM307	
	National	LM307	
	Raytheon	LM307	
	RCA	CA307	
	SiliconG	SG307	
	TI	LM307	
SFC2308	AMD	LM308	
	AD	**AD308**	**3351**
	Burr-Brown	3500	
		3501	
	Fairchild	μA308	
	Intersil	AD308	
		LM308	
	MicroPwr	MP5505	
		MPLM308	**3529**
	Motorola	LM308	
	National	LM308	
	Raytheon	LM308	
	SiliconG	SG308	
SFC2309	AMD	LM309	
	Fairchild	μA309	
		μA7805	
	Lambda	LLM309	
		LMC7805	
		LμA7805	
	Motorola	LM309	
		(Continued)	

Manufacturer Device	Replacement Source	Device	IC Master Page
SFC2309	**Motorola**	**MC7805**	**3531**
	National	LM309	
		LM7805	
	NEC	μPC7805	
	SGS	L7805	
		L7810	
	SiliconG	SG309	
		SG340-05	
		SG340-5	
	TI	μA7805	
	Toshiba	TA78005	
SFC2310	AMD	LM310	
	Intersil	LM310	
	National	LM310	
	PMI	BUF-03	
	SiliconG	SG310	
SFC2311	AMD	LM311	
	AD	AD311	
	Fairchild	μA2903	
		μA311	
	Intersil	LM311	
	Motorola	LM2903	
		LM311	
	National	LM2903	
		LM311	
	NEC	μPC271	
		μPC311	
	Raytheon	LM311	
	RCA	**CA311**	**3598**
		LM311	
	Signetics	LM2903	
		LM311	
	SiliconG	SG311	
	TI	LM2903	
		LM311	
	Thomson-CSF		
		SFC3111	
SFC2524	Thomson-CSF		
		SFC2525	
SFC2525	Thomson-CSF		
		SFC2524	
SFC2528	Motorola	MC7528	
	Raytheon	RC7528	
	SiliconG	SG7528	
	TI	SN7528	
SFC2709	Fairchild	μA709	
	Hitachi	HA1303	
	Motorola	MC1709	
	National	LM1709	
		LM709	
	NEC	μPC255	
		μPC55	
	Raytheon	RC709	
		RM709	
	RCA	CA3038	
	TI	μA709	
	Toshiba	TA7502	
SFC2710	Fairchild	μA710	
	Motorola	LM710	
		MC1710	
	National	LM710	
	PMI	CMP-01	
		CMP-02	
	SiliconG	SG710	
	TI	μA710	
SFC2711	Fairchild	μA711	
	Motorola	MC1711	
	National	LM711	
	SiliconG	SG711	
	TI	μA711	
SFC2723	Fairchild	μA723	
	Hitachi	HA17723	
	Intersil	LM723	
	Motorola	**MC1723**	**3532**
	National	LM723	
	Raytheon	RC723	
		RM723	
	RCA	**CA723**	**3602**
		LM723	
	SGS	L123	
	Signetics	μA723	
	SiliconG	SG723	
	TI	μA723	
SFC2741	**AD**	**AD741**	**3351**
	Fairchild	3871	
		μA741	
	Hitachi	HA17741	
	Intersil	AD741	
		ICL741	
	MicroPwr	MP5501	
		MP5502	**3529**
		OP-02	**3529**
		(Continued)	

Manufacturer Device	Replacement Source	Device	IC Master Page
SFC2741	Mostek	MK3871	
	Motorola	LM741	
		MC1741	
	National	LM741	
	NEC	μPC151	
		μPC741	
	PMI	OP-01	
		OP-02	**3566**
		PM741	
		SSS741	
	Raytheon	RC741	
		RM741	
	RCA	CA3056	
		CA741	
	Signetics	μA741	
	SiliconG	SG300	
		SG741	
	TI	μA741	
	Toshiba	TA7504	
SFC2748	AMD	LM201	
	AD	AD201	
	Fairchild	μA201	
		μA748	
	Intersil	LM748	
		μA748	
	Motorola	LM201	
		MC1748	
	National	LM201	
		LM748	
	Plessey	SL748	
	RCA	CA201	
		CA748	
		LM748	
	SiliconG	SG201	
		SG748	
	TI	LM201	
		SN72748P	
		μA748	
	Thomson-CSF		
		SFC2201	
SFC2805	Fairchild	μA78L05	
	Motorola	MC78L05	
	National	LM340LA-5	
		LM78L05	
	NEC	μPC78L05	
	TI	μA78L05	
SFC2812	Fairchild	μA78L12	
	Motorola	MC78L12	
	National	LM340LA-12	
		LM78L12	
	NEC	μPC78L12	
	TI	μA78L12	
SFC2815	Fairchild	μA7815	
		μA78L15	
	Lambda	LMC7815	
		LμA7815	
	Motorola	**MC7815**	**3531**
		MC78L15	
	National	LM340-15	
		LM340LA-15	
		LM340T-15	
		LM7815	
		LM78L15	
	NEC	μPC7815	
		μPC78L15	
	SGS	L7815	
	SiliconG	SG340-15	
		SG7815	
	TI	LM340-15	
		μA7815	
		μA78L15	
	Toshiba	TA78015	
SFC3111	AMD	LM311	
	AD	AD311	
	Fairchild	μA2903	
		μA311	
	Intersil	LM311	
	Motorola	LM2903	
		LM311	
	National	LM2903	
		LM311	
	NEC	μPC271	
		μPC311	
	Raytheon	LM311	
	RCA	**CA311**	**3598**
		LM311	
	Signetics	LM2903	
		LM311	
	SiliconG	SG311	
	TI	LM2903	
		(Continued)	

Manufacturer Device	Replacement Source	Device	IC Master Page
SFC3111	TI	LM311	
	Thomson-CSF		
		SFC2311	
TBA800	Fairchild	TBA800	
	Plessey	TBA800	
	SGS	TBA800	
TBA820	MCE	MCE-820	
	SGS	TBA820	
	TI	SN76001	
TBA830	SGS	TBA830	
TCA900	SGS	TCA900	
TDB0084	Exar	XR074	
	Harris	LF347	
	Motorola	MC34004	
	National	LF347	
	TI	TL074	
		TL084C	
	Thomson-CSF		
		TDB0084A	
		TDB0347	
TDB0084A	Exar	XR074	
	Harris	LF347	
	Motorola	MC34004	
	National	LF347	
	TI	TL074	
		TL084C	
	Thomson-CSF		
		TDB0084	
		TDB0347	
TDB0111	AMD	LM348	
	Exar	**XR4212**	**3378**
	Fairchild	μA348	
	Harris	HA-4741	
	MicroPwr	MP5511	
	Motorola	MC4741	
	National	LM348	
	NEC	μPC4741	
	PMI	OP-11	
	Raytheon	HA4741	
		LM348	
		RC4156	
	TI	LM348	
	Thomson-CSF		
		TDB0148	
TDB0117	~~Fairchild~~	~~μA317~~	
	LinearTech	LM317	
	MCE	MCE-LM317	
	Motorola	**LM317**	**3532**
	National	LM317	
	SiliconG	SG317	
	TI	LM317	
TDB0118	AMD	LM318	
	AD	AD518	
	Fairchild	μA318	
	National	LM318	
	NEC	μPC159	
	TI	LM318	
TDB0124	AMD	LM324	
	Exar	**XR3403**	**3378**
		XR3403C	
	Fairchild	μA324	
		μA3403	
	Motorola	LM324	
		MC3403	
	National	LM324	
	NEC	μPC324	
	Raytheon	LM324	
		RC3403	
		RC4137	
	RCA	CA324	
		LM324	
	Sanyo	LA6324	
	Signetics	LM324	
		MC3403	
	SiliconG	SG324	
	TI	LM324	
		MC3403	
TDB0137	LinearTech	LM337	
	MCE	MCE-LM337	
	National	LM337	
	TI	LM337	
TDB0139	AMD	LM339	
		LM339A	
	Fairchild	μA339	
	Hitachi	HA17901	
	Motorola	LM339	
	National	LM339	
	NEC	μPC339	
	PMI	CMP-04	
		PM339A	
	Raytheon	LM339	
	RCA	**CA339**	**3599**
		(Continued)	

◆ Discontinued

The manufacturers report their devices can be used as direct replacements.
Performance details often differ, so compare the specifications considering your requirements.

Thomson-CSF Components Corporation (Cont'd)

Manufacturer Device	Replacement Source	Device	IC Master Page
TDB0139	**RCA**	**CA339A**	**3599**
		LM339	
	SiliconG	SG339	
	TI	LM339	
TDB0146	**Exar**	**XR346**	**3377**
	National	LM346	
	Raytheon	LM346	
TDB0148	AMD	LM348	
	Exar	**XR4212**	**3378**
	Fairchild	μA348	
	Harris	HA-4741	
	MicroPwr	MP5511	
	Motorola	MC4741	
	National	LM348	
	NEC	μPC4741	
	PMI	OP-11	
	Raytheon	HA4741	
		LM348	
		RC4156	
	TI	LM348	
	Thomson-CSF		
		TDB0111	
TDB0149	AMD	LM349	
	National	LM349	
TDB0347	Exar	XR074	
	Harris	LF347	
	Motorola	MC34004	
	National	LE347	
	TI	TL074	
		TL084C	
	Thomson-CSF		
		TDB0084	
		TDB0084A	
TDB0351	Fairchild	μAF771	
	PMI	OP-16	
	RCA	**CA081**	**3596**
	TI	TL081	
TDB0353	**Exar**	**XR082**	**3376**
	RCA	**CA082**	**3596**
	TI	TL082	
TDB2905	Motorola	MC7952	
	National	LM320-5	
	SiliconG	SG320-5	
		SG320-5	
	TI	LM320-5	
TDB2912	Fairchild	μA7912	
		μA79M12	
	Lambda	LμA7912	
	Motorola	MC7912	
	National	LM320MP12	
		LM7912	
		LM79M12	
	SiliconG	SG320P-12	
		SG7912	
	TI	LM320-12	
		μA7912	
TDB2915	Fairchild	μA7915	
	Lambda	LμA7915	
	Motorola	MC7915	
	National	LM320-15	
		LM320T15	
		LM7915	
	SiliconG	SG320-15	
		SG7915	
	TI	LM320-5	
		μA7915	
TDC0155	AMD	LF155	
	Intersil	LF155	
	Motorola	LF155	
	National	LF155	
	PMI	OP-15	
		PM155	
TDC0156	AMD	LF156	
	Intersil	LF156	
	MicroPwr	OP-16	
	National	LF156	
	PMI	OP-16	
		PM156	
TDC0157	AMD	LF157	
	Intersil	LF157	
	MicroPwr	OP-17	
	National	LF157	
	PMI	OP-17	
		PM157	
	Signetics	LF157	
TDE0117	MCE	MCE-LM217	
	Motorola	**LM217**	**3532**
	National	LM217	

(Continued)

Manufacturer Device	Replacement Source	Device	IC Master Page
TDE0117	SiliconG	SG217	
	TI	LM217	
TDE0118	AMD	LM218	
	National	LM218	
	TI	LM218	
TDE0119	AMD	LM219	
	National	LM219	
	Signetics	LM219	
TDE0123	Lambda	LLM223	
	Motorola	**LM223**	**3531**
	National	LM223	
	SiliconG	SG223	
TDE0124	AMD	LM224	
	Fairchild	μA224	
	Motorola	LM224	
	National	LM224	
	Raytheon	LM224	
	RCA	CA224	
	Signetics	LM224	
	SiliconG	SG224	
	TI	LM224	
TDE0139	AMD	LM239	
	Fairchild	μA239	
	Motorola	LM239	
	National	LM239	
	PMI	CMP-04	
		PM239	
	Raytheon	LM239	
	RCA	**CA239**	**3599**
	Signetics	LM239	
	SiliconG	SG239	
	TI	LM239	
TDE0146	**Exar**	**XR246**	**3377**
	National	LM246	
	Raytheon	LM246	
TDE0148	AMD	LM248	
	National	LM248	
	TI	LM248	
TDE0155	AMD	LF255	
	National	LF255	
	PMI	PM255	
TDE0156	AMD	LF256	
	National	LF256	
TDE0157	AMD	LF257	
	National	LF257	
TDE0158	Motorola	LM258	
	National	LM258A	
	RCA	CA258A	
	Signetics	LM258	
	TI	LM258	

Toshiba America

Manufacturer Device	Replacement Source	Device	IC Master Page
LL5000	LSIComp	LL5000	
	RCA	LL5000	
	SGS	LL5000	
LL7000	LSIComp	LL7000	
TA7085	Motorola	MC1463	
TA7157	Exar	XR1310	
	Hitachi	HA1156	
	National	LM1310	
	RCA	CA1310	
	Sanyo	LA3301	
		LA3350	
	Sprague	ULN-3810	
	TI	SN76115	
TA7502	Fairchild	μA709	
	Hitachi	HA1303	
	Motorola	MC1709	
	National	LM1709	
		LM709	
	NEC	μPC255	
		μPC55	
	Raytheon	RC709	
		RM709	
	RCA	CA3038	
	TI	μA709	
	Thomson-CSF		
		SFC2709	
TA7504	**AD**	**AD741**	**3351**
	Fairchild	3871	
		μA741	
	Hitachi	HA17741	
	Intersil	AD741	
		ICL741	
	MicroPwr	MP5501	
		MP5502	**3529**
		OP-02	**3529**
	Mostek	MK3871	
	Motorola	LM741	
		MC1741	
	National	LM741	

(Continued)

Manufacturer Device	Replacement Source	Device	IC Master Page
TA7504	NEC	μPC151	
		μPC741	
	PMI	OP-01	
		OP-02	**3566**
		PM741	
		SSS741	
	Raytheon	RC741	
		RM741	
	RCA	CA3056	
		CA741	
	Signetics	μA741	
	SiliconG	SG300	
		SG741	
	TI	μA741	
	Thomson-CSF		
		SFC2741	
TA7506	AD	AD301	
	Fairchild	μA301A	
	Intersil	AD301	
	LinearTech	LM301	
		LM301A	
	Motorola	LM301	
	National	LM301	
		LM301A	
	NEC	μPC157	
		μPC301	
	Raytheon	LM301	
	RCA	CA301	
		LM301	
	SiliconG	SG301	
	TI	LM301	
		LM301A	
	Thomson-CSF		
		SFC2301	
TA7607	RCA	CA7607	
TA7611	RCA	CA7611	
TA7613	Hitachi	HA12402	
	Sprague	ULN-2204	
	Telefunken	TDA1083	
TA78005	AMD	LM309	
	Fairchild	μA309	
		μA7805	
	Lambda	LLM309	
		LMC7805	
		LμA7805	
	Motorola	LM309	
		MC7805	**3531**
	National	LM309	
		LM7805	
	NEC	μPC7805	
	SGS	L7805	
		L7810	
	SiliconG	SG309	
		SG340-05	
		SG340-5	
	TI	μA7805	
	Thomson-CSF		
		SFC2309	
TA78012	Fairchild	μA7812	
	Lambda	LMC7812	
		LμA7812	
	Motorola	**MC7812**	**3531**
	National	LM7812	
	NEC	μPC7812	
	SGS	L7812	
	SiliconG	SG7812	
	TI	μA7812	
TA78015	Fairchild	μA7815	
		μA78L15	
	Lambda	LMC7815	
		LμA7815	
	Motorola	**MC7815**	**3531**
		MC78L15	
	National	LM340-15	
		LM340LA-15	
		LM340T-15	
		LM7815	
		LM78L15	
	NEC	μPC7815	
		μPC78L15	
	SGS	L7815	
	SiliconG	SG340-15	
		SG7815	
	TI	LM340-15	
		μA7815	
		μA78L15	
	Thomson-CSF		
		SFC2815	
TC4001	Fairchild	F4001	
	Hitachi	HD14001	
	Motorola	MC14001	
	National	CD4001	

(Continued)

Manufacturer Device	Replacement Source	Device	IC Master Page
TC4001	National	MM74C02	
	OKI	MSM4001	
	RCA	CD4001	
	Sanyo	LC4001B	
	SGS	HCF4001	
	Signetics	HEF4001	
	SSS	SCL4001	
	Solitron	CM4001	
TC4002	Fairchild	F4002	
	Hitachi	HD14002	
	Motorola	MC14002	
	National	CD4002	
	RCA	CD4002	
	SGS	HCF4002	
	Signetics	HEF4002	
	SSS	SCL4002	
	Solitron	CM4002	
TC4006	Fairchild	F4006	
	Hitachi	HD14006	
	National	CD4006	
	SGS	HCF4006	
	Signetics	HEF4006	
	SSS	SCL4006	
	Solitron	CM4006	
TC4007	Fairchild	F4007	
	Hitachi	HD14007	
	Motorola	MC14007	
	National	CD4007	
	RCA	CD4007	
	SGS	HCF4007	
	Signetics	HEF4007	
	SSS	SCL4007	
	Solitron	CM4007	
TC4008	Fairchild	F4008	
	Hitachi	HD14008	
	Motorola	MC14008	
	National	CD4008	
		MM74C83	
	RCA	CD4008	
	SGS	HCF4008	
	Signetics	HEF4008	
	SSS	SCL4008	
	Solitron	CM4008	
TC4009	Hitachi	HD14009	
	National	CD4009	
	RCA	CD4049	
	SGS	HCF4009	
	SSS	SCL4009	
	Solitron	CM4009	
TC4010	Hitachi	HD14010	
	National	CD4010	
	RCA	CD4010	
	SGS	HCF4010	
	SSS	SCL4010	
	Solitron	CM4010	
TC40107	RCA	CD40107	
	SGS	HCF40107	
TC4011	Fairchild	F4011	
	Hitachi	HD14011	
	Motprola	MC14011	
	National	CD4011	
		MM74C00	
	OKI	MSM4011	
	RCA	CD4011	
	Sanyo	LC4011	
	SGS	HCF4011	
	Signetics	HEF4011	
	SSS	SCL4011	
	Solitron	CM4011	
TC4012	Fairchild	F4012	
	Hitachi	HD14012	
	Motorola	MC14012	
	National	CD4012	
	RCA	CD4012	
	SGS	HCF4012	
	Signetics	HEF4012	
	SSS	SCL4012	
	Solitron	CM4012	
TC4013	Fairchild	F4013	
	Hitachi	HD14013	
	Motorola	MC14013	
	National	CD4013	
		MM74C74	
	OKI	MSM4013	
	RCA	CD4013	
	Sanyo	LC4013	
	SGS	HCF4013	
	Signetics	HEF4013	
	SSS	SCL4013	
	Solitron	CM4013	
TC4014	Fairchild	F4014	
	Hitachi	HD14014	

(Continued)

♦ Discontinued

Bold face device numbers indicate manufacturers data is provided in the IC Master on the pages noted.

© IC MASTER 1984

Toshiba America (Cont'd)

Manufacturer Device	Replacement Source	Device	IC Master Page
TC4014	Motorola	MC14014	
	National	CD4014	
	RCA	CD4014	
	SGS	HCF4014	
	Signetics	HEF4014	
	SSS	SCL4014	
	Solitron	CM4014	
TC4015	Fairchild	F4015	
	Hitachi	HD14015	
	Motorola	MC14015	
	National	CD4015	
		MM74C164	
	OKI	MSM4015	
	RCA	CD4015	
	Sanyo	LC4015	
	SGS	HCF4015	
	Signetics	HEF4015	
	SSS	SCL4015	
	Solitron	CM4015	
TC4016	Fairchild	F4016	
		F4066	
	Hitachi	HD14016	
		HD14066	
	Motorola	MC14016	
		MC14066	
	National	CD4016	
		CD4066	
	RCA	CD4016	
		CD4066	
	Sanyo	LC4016	
		LC4066	
	SGS	HCF4016	
		HCF4066	
	Signetics	NEF4016	864
		HEF4066	
	SSS	SCL4016	
		SCL4066	
	Solitron	CM4016	
		CM4066	
		HCF4016	
	Toshiba	TC4066	
TC40160	Fairchild	F40160	
	Hitachi	HD14160	
	Motorola	MC14160	
	National	CD40160	
		MM54C160	
		MM74C160	
	RCA	CD40160	
	SGS	HCF40160	
	SSS	SCL4160	
TC40161	Fairchild	F40161	
	Hitachi	HD14161	
	Motorola	MC14161	
	National	CD40161	
		MM54C161	
		MM74C161	
	RCA	CD40161	
	SGS	HCF40161	
	Signetics	HEF40161	
	SSS	SCL4161	
TC40162	Fairchild	F40162	
	Hitachi	HD14162	
	Motorola	MC14162	
	National	CD40162	
		MM54C162	
		MM74C162	
	RCA	CD40162	
	SGS	HCF40162	
	Signetics	HEF40162	
	SSS	SCL4162	
TC40163	Fairchild	F40163	
	Hitachi	HD14163	
	Motorola	MC14163	
	National	CD40163	
		MM54C163	
		MM74C163	
	RCA	CD40163	
	SGS	HCF40163	
	Signetics	HEF40163	
	SSS	SCL4163	
TC4017	Fairchild	F4017	
	Hitachi	HD14017	
	Motorola	MC14017	
	National	CD4017	
	RCA	CD4017	
	SGS	HCF4017	
	Signetics	HEF4017	
	SSS	SCL4017	
	Solitron	CM4017	
TC40174	Fairchild	F40174	
	Hitachi	HD14174	
	Motorola	MC14174	
	National	CD40174	
		MM54C174	
		MM74C174	
	RCA	CD40174	
	SGS	HCF40174	
	Signetics	HEF40174	
	SSS	SCL4174	
TC40175	Fairchild	F40175	
	Hitachi	HD14175	
	Motorola	MC14175	
	National	CD40175	
		MM54C175	
		MM74C175	
	Signetics	HEF40175	
TC4018	Fairchild	F4018	
	Hitachi	HD14018	
	Motorola	MC14018	
	National	CD4018	
	RCA	CD4018	
	SGS	HCF4018	
	Signetics	HEF4018	
	SSS	SCL4018	
	Solitron	CM4018	
TC4019	Fairchild	F4019	
	National	CD4019	
	OKI	MSM4019	
	RCA	CD4019	
	Sanyo	LC4019	
	SGS	HCF4019	
	Signetics	HEF4019	
	SSS	SCL4019	
	Solitron	CM4019	
TC40192	Fairchild	F4029	
	Motorola	MC14029	
	National	CD40192	
		CD4029	
	RCA	CD40192	
		CD4029	
	SGS	HCF40192	
		HCF4029	
	Signetics	HEF40192	
	SSS	SCL4029	
		SCL4192	
	Solitron	CM4029	
	Toshiba	TC4029	
TC40193	Fairchild	F40193	
	National	CD40193	
		MM54C193	
		MM74C193	
	RCA	CD40193	
	SGS	HCF40193	
	Signetics	HEF40193	
	SSS	SCL4193	
TC4020	Fairchild	F4020	
	Hitachi	HD14020	
	Motorola	MC14020	
	National	CD4020	
	RCA	CD4020	
	SGS	HCF4020	
	Signetics	HEF4020	
	SSS	SCL4020	
	Solitron	CM4020	
TC4021	Fairchild	F4021	
	Hitachi	HD14021	
	Motorola	MC14021	
	National	CD4021	
	RCA	CD4021	
	SGS	HCF4021	
	Signetics	HEF4021	
	SSS	SCL4021	
TC4022	Fairchild	F4022	
	Hitachi	HD14022	
	Motorola	MC14022	
	National	CD4022	
	RCA	CD4022	
	SGS	HCF4022	
	Signetics	HEF4022	
	SSS	SCL4022	
	Solitron	CM4022	
TC4023	Fairchild	F4023	
	Hitachi	HD14023	
	Motorola	MC14023	
	National	CD4023	
		MM74C10	
	RCA	CD4023	
	SGS	HCF4023	
	Signetics	HEF4023	
	SSS	SCL4023	
	Solitron	CM4023	
TC4024	Fairchild	F4024	
	Hitachi	HD14024	
	Motorola	MC14024	
	National	CD4024	
	RCA	CD4024	
	SGS	HCF4024	
	Signetics	HEF4024	
	SSS	SCL4024	
	Solitron	CM4024	
TC4025	Fairchild	F4025	
	Hitachi	HD14025	
	Motorola	MC14025	
	National	CD4025	
	RCA	CD4025	
	SGS	HCF4025	
	Signetics	HEF4025	
	SSS	SCL4025	
	Solitron	CM4025	
TC4028	Fairchild	F4028	
	Hitachi	HD14028	
	Motorola	MC14028	
	National	CD4028	
		MM74C42	
	OKI	MSM4028	
	Sanyo	LC4028	
	SGS	HCF4028	
	Signetics	HEF4028	
	SSS	SCL4028	
	Solitron	CM4028	
TC4029	Fairchild	F4029	
	Motorola	MC14029	
	National	CD40192	
		CD4029	
	RCA	CD40192	
		CD4029	
	SGS	HCF40192	
		HCF4029	
	Signetics	HEF40192	
	SSS	SCL4029	
		SCL4192	
	Solitron	CM4029	
	Toshiba	TC40192	
TC4030	Fairchild	F4030	
	National	CD4030	
	RCA	CD4030	
	SGS	HCF4030	
	Signetics	HEF4030	
	SSS	SCL4030	
	Solitron	CM4030	
TC4032	Hitachi	HD14032	
	Motorola	MC14032	
	RCA	CD4032	
	SGS	HCF4032	
	Solitron	CM4032	
TC4034	Fairchild	F4034	
	Hitachi	HD14034	
	Motorola	MC14034	
	National	CD4034	
	RCA	CD4034	
	SGS	HCF4034	
	SSS	SCL4034	
	Solitron	CM4034	
TC4035	Fairchild	F4035	
	Hitachi	HD14035	
	Motorola	MC14035	
	RCA	CD4035	
	SGS	HCF4035	
	Signetics	HEF4035	
	Solitron	CM4035	
TC4036	RCA	CD4036	
	Solitron	CM4036	
TC4038	Hitachi	HD14038	
	Motorola	MC14038	
	RCA	CD4038	
	SGS	HCF4038	
	Solitron	CM4038	
TC4039	RCA	CD4039	
	Solitron	CM4039	
TC4040	Fairchild	F4040	
	Hitachi	HD14040	
	Motorola	MC14040	
	National	CD4040	
	RCA	CD4040	
	SGS	HCF4040	
	Signetics	HEF4040	
	SSS	SCL4040	
	Solitron	CM4040	
TC4042	Fairchild	F4042	
	Hitachi	HD14042	
	Motorola	MC14042	
	National	CD4042	
	RCA	CD4042	
TC4042	SGS	HCF4042	
	Signetics	HEF4042	
	SSS	SCL4042	
	Solitron	CM4042	
TC4043	Hitachi	HD14043	
	Motorola	MC14043	
	National	CD4043	
	RCA	CD4043	
	SGS	HCF4043	
	Signetics	HEF4043	
	SSS	SCL4043	
	Solitron	CM4043	
TC4044	Fairchild	F4044	
	Hitachi	HD14044	
	Motorola	MC14044	
	National	CD4044	
	RCA	CD4044	
	SGS	HCF4044	
	Signetics	HEF4044	
	Solitron	CM4044	
TC4047	Fairchild	F4047	
	National	CD4047	
	RCA	CD4047	
	SGS	HCF4047	
	Signetics	HEF4047	
	SSS	SCL4047	
	Solitron	CM4047	
TC4049	Fairchild	F4049	
	Hitachi	HD14049	
	Motorola	MC14049	
	National	CD4049	
	OKI	MSM4049	
	RCA	CD4049	
	Sanyo	LC4049	
	SGS	HCF4049	
	Signetics	HEF4049	
	SSS	SCL4049	
	Solitron	CM4049	
TC4050	Fairchild	F4050	
	Hitachi	HD14050	
	Motorola	MC14050	
	National	CD4050	
	RCA	CD4050	
	SGS	HCF4050	
	Signetics	HEF4050	
	SSS	SCL4050	
	Solitron	CM4050	
TC4051	Fairchild	F4051	
	Hitachi	HD14051	
	Motorola	MC14051	
	National	CD4051	
	RCA	CD4051	
	SGS	HCF4051	
	Signetics	HEF4051	
	SSS	SCL4051	
	Solitron	CM4051	
TC4052	AD	AD7502	
	Hitachi	HD14052	
	MicroPwr	MP7502	
	National	CD4052	
	SSS	SCL4052	
	Solitron	CM4052	
TC4053B	Fairchild	F4053	
	Hitachi	HD14053	
	Motorola	MC14053	
	National	CD4053	
	RCA	CD4053	
	SGS	HCF4053	
	Signetics	HEF4053	
	SSS	SCL4053	
	Solitron	CM4053	
TC4054	RCA	CD4054	
	SGS	HCF4054	
TC4055	Mitel	MD4055	
	RCA	CD4055	
	SGS	HCF4055	
TC4056	Mitel	MD4056	
	RCA	CD4056	
	SGS	HCF4056	
TC4063	RCA	CD4063	
	SGS	HCF4063	
TC4066	Fairchild	F4016	
		F4066	
	Hitachi	HD14016	
		HD14066	
	Motorola	MC14016	
		MC14066	
	National	CD4016	
		CD4066	
	RCA	CD4016	
		CD4066	
	Sanyo	LC4016	

(Continued)

(Continued)

◆ Discontinued

The manufacturers report their devices can be used as direct replacements.
Performance details often differ; so compare the specifications considering your requirements.

Toshiba America (Cont'd)

Manufacturer Device	Replacement Source	Device	IC Master Page
TC4066	Sanyo	LC4066	
	SGS	HCF4016	
		HCF4066	
	Signetics	**HEF4016**	**864**
		HEF4066	
	SSS	SCL4016	
		SCL4066	
	Solitron	CM4016	
		CM4066	
		HCF4016	
	Toshiba	TC4016	
TC4068	Fairchild	F4068	
	Hitachi	HD14068	
	Motorola	MC14068	
	RCA	CD4068	
	SGS	HCF4068	
	Signetics	HEF4068	
	SSS	SCL4068	
	Solitron	CM4068	
TC4069	Fairchild	F4069	
	Hitachi	HD14069	
	Motorola	MC14069	
	National	CD4069	
		MM54C04	
		MM74C04	
	OKI	MSM4069	
	RCA	CD4069	
	Sanyo	LC4069	
	SGS	HCF4069	
	Signetics	HEF4069	
	SSS	SCL4069	
		SCL4449	
	Solitron	CM4069	
TC4071	Fairchild	F4071	
	Hitachi	HD14071	
	Motorola	MC14071	
	National	CD4071	
		MM74C32	
	OKI	MSM4071	
	RCA	CD4071	
	Sanyo	LC4071	
	SGS	HCF4071	
	Signetics	HEF4071	
	SSS	SCL4071	
	Solitron	CM4071	
TC4072	Fairchild	F4072	
	Hitachi	HD14072	
	Motorola	MC14072	
	National	CD4072	
	RCA	CD4072	
	SGS	HCF4072	
	Signetics	HEF4072	
	SSS	SCL4072	
TC4073	Fairchild	F4073	
	Hitachi	HD14073	
	Motorola	MC14073	
	National	CD4073	
	RCA	CD4073	
	SGS	HCF4073	
	Signetics	HEF4073	
	SSS	SCL4073	
	Solitron	CM4073	
TC4075	Fairchild	F4075	
	Hitachi	HD14075	
	Motorola	MC14075	
	National	CD4075	
	RCA	CD4075	
	SGS	HCF4075	
	Signetics	HEF4075	
	SSS	SCL4075	
	Solitron	CM4075	
TC4076	Fairchild	F4076	
	Hitachi	HD14076	
	Motorola	MC14076	
	National	CD4076	
		MM54C173	
		MM74C173	
	RCA	CD4076	
	SGS	HCF4076	
	Signetics	HEF4076	
	SSS	SCL4076	
	Solitron	CM4076	
TC4078	Fairchild	F4078	
	Hitachi	HD14078	
	Motorola	MC14078	
	RCA	CD4078	
	SGS	HCF4078	
	Signetics	HEF4078	
	SSS	SCL4078	
	Solitron	CM4078	
TC4081	Fairchild	F4081	
	Hitachi	HD14081	
	Motorola	MC14081	
	National	CD4081	
		MM74C08	
	OKI	MSM4081	
	RCA	CD4081	
	Sanyo	LC4081	
	SGS	HCF4081	
	Signetics	HEF4081	
	SSS	SCL4081	
	Solitron	CM4081	
TC4082	Fairchild	F4082	
	Hitachi	HD14082	
	Motorola	MC14082	
	National	CD4082	
	RCA	CD4082	
	SGS	HCF4082	
	Signetics	HEF4082	
	SSS	SCL4082	
TC4085	Fairchild	F4085	
	National	CD4085	
	RCA	CD4085	
	SGS	HCF4085	
	Signetics	HEF4085	
	SSS	SCL4085	
TC4086	Fairchild	F4086	
	RCA	CD4086	
	SGS	HCF4086	
	Signetics	HEF4086	
	SSS	SCL4086	
TC4093	Fairchild	F4093	
	Hitachi	HD14093	
	Motorola	MC14093	
	National	CD4093	
	OKI	MSM4093	
	RCA	CD4093	
	Sanyo	LC4093	
	SGS	HCF4093	
	Signetics	HEF4093	
	SSS	SCL4093	
TC4094	Hitachi	HD14094	
	Motorola	MC14094	
	RCA	CD4094	
	SGS	HCF4094	
	SSS	SCL4094	
TC4099	Hitachi	HD14099	
	Motorola	MC14099	
	National	CD4099	
	RCA	CD4099	
	SGS	HCF4099	
	SSS	SCL4099	
TC40H000	Motorola	MC74HC00	
	National	MM74HC00	
	RCA	CD74HC00	
	SPI	**SP74HC00**	**848**
	Signetics	PCF74HC00	
TC40H002	Motorola	MC74HC02	
	National	MM74HC02	
	RCA	CD74HC02	
	SPI	**SP74HC02**	**848**
	Signetics	PCF74HC02	
TC40H004	Motorola	MC74HC04	
	National	MM74HC04	
	RCA	CD74HC04	
	SPI	**SP74HC04**	**848**
TC40H010	Motorola	MC74HC10	
	National	MM74HC10	
	RCA	CD74HC10	
	SPI	**SP74HC10**	**848**
	Signetics	PCF74HC10	
	SiliconG	SG75474	
TC40H011	Motorola	MC74HC11	
	National	MM74HC11	
	RCA	CD74HC11	
	SPI	**SP74HC11**	**848**
	Signetics	PCF74HC11	
TC40H020	Motorola	MC74HC20	
	National	MM74HC20	
	RCA	CD74HC20	
	SPI	**SP74HC20**	**848**
	Signetics	PCF74HC20	
TC40H027	Motorola	MC74HC27	
	National	MM74HC27	
	RCA	CD74HC27	
	SPI	**SP74HC27**	**848**
	Signetics	PCF74HC27	
TC40H032	Motorola	MC74HC32	
	National	MM74HC32	
	RCA	CD74HC32	
	SPI	**SP74HC32**	**848**
	Signetics	PCF74HC32	
TC40H074	Motorola	MC74HC74	
	National	MM74HC74	
	RCA	CD74HC74	
	SPI	**SP74HC74**	**848**
	Signetics	PCF74HC74	
TC40H076	Motorola	MC74HC76	
	National	MM74HC76	
	RCA	CD74HC76	
	SPI	**SP74HC76**	**848**
	Signetics	PCF74HC76	
TC40H107	Motorola	MC74HC107	
	National	MM74HC107	
	RCA	CD74HC107	
	SPI	**SP74HC107**	**848**
	Signetics	PCF74HC107	
TC40H139	Motorola	MC74HC139	
	National	MM74HC139	
	RCA	CD74HC139	
	SPI	**SP74HC139**	**848**
	Signetics	PCF74HC139	
TC40H153	Motorola	MC74HC153	
	National	MM74HC153	
	RCA	CD74HC153	
	SPI	**SP74HC153**	**848**
	Signetics	PCF74HC153	
TC40H157	Motorola	MC74HC157	
	National	MM74HC157	
	RCA	CD74HC157	
	SPI	**SP74HC157**	**848**
	Signetics	PCF74HC157	
TC40H158	Motorola	MC74HC158	
	National	MM74HC158	
	RCA	CD74HC158	
	SPI	**SP74HC158**	**848**
	Signetics	PCF74HC158	
TC40H174	Motorola	MC74HC174	
	National	MM74HC174	
	RCA	CD74HC174	
	SPI	**SP74HC174**	**848**
	Signetics	PCF74HC174	
TC40H175	Motorola	MC74HC175	
	National	MM74HC175	
	RCA	CD74HC175	
	SPI	**SP74HC175**	**848**
	Signetics	PCF74HC175	
TC40H192	Motorola	MC74HC192	
	National	MM74HC192	
	RCA	CD74HC192	
	SPI	**SP74HC192**	**848**
	Signetics	PCF74HC192	
TC40H193	Motorola	MC74HC193	
	National	MM74HC193	
	RCA	CD74HC193	
	SPI	**SP74HC193**	**848**
	Signetics	PCF74HC193	
TC40H240	Motorola	MC74HC240	
	National	MM74HC240	
	RCA	CD74HC240	
	SPI	**SP74HC240**	**848**
	Signetics	PCF74HC240	
TC4508	Hitachi	HD14508	
		HD74147	
	Motorola	MC14508	
	National	DM74147	
	RCA	CD4508	
	SGS	HCF4508	
	Signetics	**74147**	**861**
		HEF4508	
		N82147	
	SSS	SCL4508	
	Solitron	CM4508	
	TI	**SN74147**	**970**
TC4510	Fairchild	F4510	
	Hitachi	HD14510	
	Motorola	MC14510	
	National	CD4510	
	RCA	CD4510	
	SGS	HCF4510	
	Signetics	HEF4510	
	SSS	SCL4510	
	Solitron	CM4510	
TC4511	Fairchild	F4511	
	Hitachi	HD14511	
	Mitel	MD4511	
	MMI	4511	
	Motorola	MC14511	
	National	CD4511	
	NEC	μPD4511	
	RCA	CD4511	
	SGS	HCF4511	
	Signetics	HEF4511	
TC4511	SSS	SCL4511	
	Solitron	CM4511	
TC4512	Fairchild	F4512	
	Hitachi	HD14512	
	Motorola	MC14512	
	National	CD4512	
	RCA	CD4512	
	SGS	HCF4512	
	SSS	SCL4512	
TC4514	Fairchild	F4514	
	Hitachi	HD14514	
	Motorola	MC14514	
	National	CD4514	
	RCA	CD4514	
	SGS	HCF4514	
	Signetics	HEF4514	
	SSS	SCL4514	
	Solitron	CM4514	
TC4515	Fairchild	F4515	
	Hitachi	HD14515	
	Motorola	MC14515	
	National	CD4515	
	RCA	CD4515	
	SGS	HCF4515	
	Signetics	HEF4515	
	SSS	SCL4515	
	Solitron	CM4515	
TC4516	Fairchild	F4516	
	Hitachi	HD14516	
	Motorola	MC14516	
	National	CD4516	
	RCA	CD4516	
	SGS	HCF4516	
	Signetics	HEF4516	
	SSS	SCL4516	
	Solitron	CM4516	
TC4518	Fairchild	F4518	
	Hitachi	HD14518	
	Motorola	MC14518	
	National	CD4518	
	RCA	CD4518	
	SGS	HCF4518	
	Signetics	HEF4518	
	SSS	SCL4518	
	Solitron	CM4518	
TC4520	Fairchild	F4520	
	Hitachi	HD14520	
	Motorola	MC14520	
	National	CD4520	
	OKI	MSM4520	
	RCA	CD4520	
	Sanyo	LC4520	
	SGS	HCF4520	
	Signetics	HEF4520	
	SSS	SCL4520	
	Solitron	CM4520	
TC4521	Fairchild	F4521	
	Motorola	MC14521	
	RCA	CD4045	
	SGS	HCF4045	
	Signetics	HEF4521	
	SSS	SCL4445	
	Solitron	CM4045	
TC4522	Fairchild	F4522	
	Hitachi	HD14522	
	Motorola	MC14522	
	National	CD4522	
	RCA	CD4522	
	Signetics	HEF4522	
	SSS	SCL4522	
TC4526	Fairchild	F4526	
	Hitachi	HD14526	
	Motorola	MC14526	
	National	CD4526	
	Signetics	HEF4526	
	SSS	SCL4526	
TC4527	Fairchild	F4527	
	Hitachi	HD14527	
	Motorola	MC14527	
	National	CD4527	
	RCA	CD4527	
	SGS	HCF4527	
	Signetics	HEF4527	
	SSS	SCL4527	
	Toshiba	TR4527	
TC4528	Fairchild	F4528	
	Hitachi	HD14528	
	Motorola	MC14528	
	National	CD4528	
		MM74C221	
	RCA	CD4098	
	SGS	HCF4098	

(Continued)

(Continued)

Discontinued

Bold face device numbers indicate manufacturers data is provided in the IC Master on the pages noted.

© IC MASTER 1984

Toshiba America (Cont'd)

Manufacturer Device	Replacement Source	Device	IC Master Page
TC4528	Signetics	HEF4528	
	SSS	SCL4528	
TC4531	Fairchild	F4531	
	Hitachi	HD14531	
	Motorola	MC14531	
	RCA	CD40101	
	SGS	HCF40101	
	Signetics	HEF4531	
	SSS	SCL4531	
TC4532	Fairchild	F4532	
	Hitachi	HD14532	
	Motorola	MC14532	
	RCA	CD4532	
	SGS	HCF4532	
	Signetics	HEF4532	
	SSS	SCL4532	
TC4539	Fairchild	F4539	
	Hitachi	HD14539	
	Motorola	MC14539	
	Signetics	HEF4539	
TC4543	Fairchild	F4543	
	Hitachi	HD14543	
	Motorola	MC14543	
	National	CD4543	
	RCA	CD4543	
	Signetics	HEF4543	
TC4555	Fairchild	F4555	
	Hitachi	HD14555	
	Motorola	MC14555	
	RCA	CD4555	
	SGS	HCF4555	
	Signetics	HEF4555	
	SSS	SCL4555	
TC4556	Fairchild	F4556	
	Motorola	MC14556	
	RCA	CD4556	
	SGS	HCF4556	
	Signetics	HEF4556	
	SSS	SCL4556	
TC4560	Hitachi	HD14560	
	Motorola	MC14560	
TC4561	Hitachi	HD14561	
	Motorola	MC14561	
TC4572	Hitachi	HD14572	
	Motorola	MC14572	
TC4583	Fairchild	F4583	
	Hitachi	HD14583	
	Motorola	MC14583	
TC4585	Fairchild	F40085	
	Hitachi	HD14585	
	Motorola	MC14585	
	National	MM74C85	
	RCA	CD4585	
	Signetics	HEF4585	
	SSS	SCL4585	
TC4XXX	Fairchild	34XXX	
		F4XXX	
	Hitachi	HD14XXX	
	Motorola	MC14XXX	
	National	CD4XXX	
	OKI	MSM4XXX	
	RCA	CD4XXX	
	SGS	HCF4XXX	
	SSS	SCL4XXX	
	Solitron	CM4XXX	
	TI	TP4000 series	
TC5047	NEC	μPD445	
TC5364	Intel	2364A	
	MicroPwr	MP2365	
	SMOS	SMM2365	
TC5504	Fujitsu	MB8404	
	Harris	HM6504	
	Intersil	IM6504	
	MicroPwr	MP6504	
	National	NMC6504	
	RCA	CDM5104	
	SMOS	SRM6504	
TC5508	AMI	S6508	
	Fairchild	4736B	
	Harris	**HM6508**	**3965**
	Intel	2125A	
	Motorola	MCM2125	
	National	MM74C929	
		NMC6508	
	NEC	μPD443	
	SSS	SCM21C02	
TC5514	Fujitsu	MB8414	
	Harris	HM6514	
	Hitachi	HM4334	
	Intersil	IM6514	

(Continued)

Manufacturer Device	Replacement Source	Device	IC Master Page
TC5514	MicroPwr	MP6514	
	Mitsubishi	M58981	
	National	NMC6514	
	NEC	μPD6514	
	OKI	**MSM5115**	**4118**
	RCA	MWS5514	
	SMOS	SRM6514	
TC5516	AD	AD515	
	Burr-Brown	3528	
	Harris	HM6116	
	IDT	IDT6116	
	MicroPwr	MP6116	
	Mitsubishi	M5K8725	
	OKI	**MSM2128**	**4118**
	SMOS	SMM2016	
TC5516A	Fujitsu	MB8417	
	Harris	HM65172	
	MicroPwr	MP6118	
	RCA	CDM6117	
	SMOS	SRM2017	
TC5517A	Fujitsu	MB8416	
	Harris	HM65162	
	Hitachi	HM6116	
	IDT	IDT6116	
	MicroPwr	MP6116	
	Mostek	MK6116	
	Motorola	MCM6116	
	NEC	**μPD446**	**4090**
	RCA	CDM6116	
	SMOS	SRM2016	
	Toshiba	TC5517B	
TC5518B	Fujitsu	MB8418	
	Hitachi	HM6117	
	MicroPwr	MP6117	
	NEC	**μPD449**	**4093**
	RCA	CDM6118	
	SMOS	SRM2018	
TC5564	Fujitsu	MB8464	
	Hitachi	HM6264	
		HM6464	
	Mitsubishi	M5M5164	
		M5M5165	
	Toshiba	TC5565	
TC5565	Fujitsu	MB8464	
	Hitachi	HM6264	
		HM6464	
	Mitsubishi	M5M5164	
		M5M5165	
	Toshiba	TC5564	
TC7400	Fairchild	7400	
	Hitachi	HD7400	
	National	DM7400	
	Signetics	**7400**	**860**
	TI	**SN7400**	**920**
TC7404	Fairchild	7404	
	Hitachi	HD7404	
	National	DM7404	
	Signetics	**7404**	**860**
	TI	**SN7404**	**921**
TC7410	Fairchild	7410	
	Hitachi	HD7410	
	National	DM7410	
	Signetics	**7410**	**860**
	TI	**SN7410**	**923**
TC7420	Fairchild	7420	
		9004	
	Hitachi	HD7420	
	National	DM7420	
		DM9004C	
	Signetics	**7420**	**860**
	TI	**SN7420**	**926**
TD62001	Exar	XR2001	
		XR2201	
	Fairchild	9665	
	Motorola	**MC1411**	**3064**
		ULN2001	
		XR2201	
	NEC	μPA2001	
	RIFA	PBD352301	
	Sanyo	LB1231	
	SGS	L201	
	SiliconG	SG2001	
	Sprague	ULN-2001	
		ULN-2021	
		ULQ-2002	
		ULS-2001	
	TI	ULN2001	
TD62002	Exar	XR2002	
		XR2202	
	Fairchild	9666	
		MC1412	
	Motorola	**MC1412**	**3064**

(Continued)

Manufacturer Device	Replacement Source	Device	IC Master Page
TD62002	Motorola	ULN2002	
	NEC	μPA2002	
	RIFA	PBD352304	
	Sanyo	LB1232	
	SGS	L202	
	Signetics	NE5602	
	Sprague	ULN-2002	
		ULQ-2003	
	TI	ULN2002	
TD62003	Exar	XR2003	
		XR2004	
		XR2203	
	Fairchild	9667	
		MC1413	
	Mitsubishi	M54523	
	Motorola	**MC1413**	**3064**
		ULN2003	
	Sanyo	LB1233	
	SGS	L203	
	Signetics	NE5603	
		ULN2003	
	SiliconG	SG2003	
	Sprague	ULN-2003	
		ULQ-2003	
		ULQ-2004	
		ULS-2003	
		ULS-2004	
	TI	ULN2003	
TD62004	Exar	XR2204	
	Fairchild	9668	
	Mitsubishi	M54526	
	Motorola	**MC1416**	**3064**
		ULN2004	
	Sanyo	LB1234	
	SGS	L204	
	Signetics	NE5604	
		ULN2004	
	SiliconG	SG2004	
	Sprague	ULN-2004	
		ULS2004	
	TI	ULN2004	
TD62064	Mitsubishi	ULN-2064	
	Sprague	ULN-2064	
	TI	SN75064	
		ULN2064	
TD62074	Motorola	ULN2074	
	Sprague	ULN-2074	
	TI	SN75074	
		ULN2074	
TM2332	AMD	AM9232	
	AMI	S68322	
		S68A332	
	Fairchild	F3532	
	GI	R094132	
		T094132	
	GTEMicro	2332	
	Hitachi	HN46332	
	Intersil	IM7332	
	Motorola	MC68332	
		MCM68332	
		MCM68A332	**4048**
	National	MM52132	
	NCR	2332	
		NCR2332	
	NEC	**μPD2332**	**4100**
	OKI	**MSM2932**	**4118**
	RCA	**CDM5333**	**1593**
	Rockwell	R2332	
	SiliconG	SG3532	
	SSS	SCM23C32	
	SMC	ROM4732	
	Synertek	**SY2332**	**4211**
	TI	**TMS4732**	**4226**
	Toshiba	TMM333	
	Universal	UM2332	
	VTI	**VT2332**	**4249**
TM2364	AMI	S68364	
	GI	R09464	
	GTEMicro	G5364	
	Intersil	IM7364	
	MicroPwr	MP2364	
	Mitsubishi	M5L2364	
	Mostek	MK36000	
	Motorola	**MCM68364**	**4048,4054**
	National	MM5235	
	NCR	NCR2364	
	RCA	**CDM5364**	**1593**
	SMOS	SMM2364	
	SGS	M36000	
	Signetics	2664A	
	SSS	SCM23C64	

(Continued)

Manufacturer Device	Replacement Source	Device	IC Master Page
TM2364	SSS	SCM23C65	
	SMC	ROM36000	
	Synertek	**SY2364**	**4211**
	TI	**TMS4764**	**4225**
	VTI	**VT2364**	**4250**
TMM2016	**AMD**	**AM9128**	**3917**
	Fairchild	F3528	
	Fujitsu	MB8128	
	Intel	2128	
	Motorola	MCM2016	
	National	NMC2116	
	OKI	**MSM5128**	**4118**
	Synertek	SY2128	
		SY2129	
	TI	TMS4016	
TMM23256	AMD	AM92256	
	Fujitsu	MB83256	
	GI	R09256	
	Hitachi	HN613256	
	MicroPwr	MP2326	
	Mostek	MK38000	
	Motorola	MCM63256	
	NCR	23256	
	NEC	μPD2/83256	
		μPD23/83256	
	SMOS	SMM2326	
	Signetics	23256	
	Synertek	SY23256	
TMM2364	AMD	AM9264	
	AMI	S4264	
		S68A364	**3933**
	GTEMicro	2364-3	
	Hitachi	HN48364	
	Mostek	MK36000-5	
	Motorola	MCM68365	
		MCM68366	
	National	MM52164	
	NCR	2364	
	NEC	UPD2/8364-30	
		μPD23/8364-30	
	OKI	MSM2965	
	Signetics	2664A-30	
	Synertek	**SY2364-3**	**4211**
	Weitek	SC8164	
TMM2365	AMD	AM9265	
	GI	R09864	
	GTEMicro	G5365	
	Hitachi	HN61364	
	Mostek	MK37000	
	RCA	CDM5365	
	Signetics	**2364-20**	**4196**
	Synertek	**SY2365**	**4211**
	VTI	**VT2365**	**4251**
TMM2732	AMD	AM2732	
	Hitachi	HN462732	
	Intel	2732	
		2732A	
		M2732	
	Mitsubishi	M5L2732	
	National	MM2732	
		NMC2732	
	NEC	μPD2732	
	Toshiba	TMM324C	
	Universal	UM2732	
TMM2764	AMD	AM2764	
	Fujitsu	MBM2764	
	Hitachi	HN482764	
	Intel	2764	
		M2764	
	Intersil	IM2764	
	Mitel	M5L2764	
	Mitsubishi	M5L2764	
	Mostek	MK2764	
	National	NMC2764	
	NEC	μPD2764	
	SEEQ	5133	
TMM314	AMD	AM9114	
	EMM-SESCO	2114	
	Fairchild	F2114	
	Hitachi	HM472114	
	Intel	2114	
		2114A	
	Intersil	IM2114	
	MicroPwr	MP2114	
	Motorola	MCM2114	
	National	MM2114	
	NEC	μPD2114	
	OKI	**MSM2114**	**4118**
	Panasonic	MN2114	
	SMOS	SRM2114	
	SSS	SCM21C14	
	Synertek	**SY2114**	**4210**

(Continued)

◆ Discontinued

The manufacturers report their devices can be used as direct replacements.
Performance details often differ, so compare the specifications considering your requirements.

Toshiba America (Cont'd)

Manufacturer Device	Replacement Source	Device	IC Master Page
TMM314	TI	TMS4045	
	Toshiba	TMM314A	
TMM315	AMD	AM2147	
	AMI	4017	
	Fujitsu	MBM2147	
	Hitachi	HM4847	
	Intel	2147	
	Intersil	IM2147	
	ITT	4547	
	Motorola	MCM2147	
	National	MM2147	
	NEC	μPD2147	
	Synertek	SY2147	
	TI	TMS2147	
	Universal	UM2147	
TMM324C	AMD	AM2732	
	Hitachi	HN462732	
	Intel	2732	
		2732A	
		M2732	
	Mitsubishi	M5L2732	
	National	MM2732	
		NMC2732	
	NEC	μPD2732	
	Toshiba	TMM2732	
	Universal	UM2732	
TMM331A	AMD	AM9218	
	~~Fairchild~~	~~3516~~	
		68316	
		F3516	
		F35316	
		F68316	**1464**
	GI	R03-9316	
	GTEMicro	2316	
	Intel	2316	
	Mostek	MK34000	
	Motorola	MCM68316	
		MCM68A316	
		MM2316	
	National	MM52116	
		MM5258	
	NCR	2316	
		NCR2316	
	NEC	μPD2316	
	OKI	**MSM2916**	**4118**
	Rockwell	R2316	
	SGS	M2316	
	TI	SBP8316	
	Toshiba	TMM334	
TMM333	AMD	AM9232	
	AMI	S68322	
		S68A332	
	Fairchild	F3532	
	GI	R094132	
		T094132	
	GTEMicro	2332	
	Hitachi	HN46332	
	Intersil	IM7332	
	Motorola	MC68332	
		MCM68332	
		MCM68A332	**4048**
	National	MM52132	
	NCR	2332	
		NCR2332	
	NEC	**μPD2332**	**4100**
	OKI	**MSM2932**	**4118**
	RCA	**CDM5333**	**1593**
	Rockwell	R2332	
	SiliconG	SG3532	
	SSS	SCM23C32	
	SMC	ROM4732	
	Synertek	**SY2332**	**4211**
	TI	**TMS4732**	**4226**
	Toshiba	TM2332	
	Universal	UM2332	
	VTI	**VT2332**	**4249**
TMM334	AMD	AM9218	
	Fairchild	3516	
		68316	
		F3516	
		F35316	
		F68316	**1464**
	GI	R03-9316	
	GTEMicro	2316	
	~~Intel~~	~~2316~~	
	Mostek	MK34000	
	Motorola	MCM68316	
		MCM68A316	
		MM2316	
	National	MM52116	
		(Continued)	

Manufacturer Device	Replacement Source	Device	IC Master Page
TMM334	National	MM5258	
	NCR	2316	
		NCR2316	
	NEC	μPD2316	
	OKI	**MSM2916**	**4118**
	Rockwell	R2316	
	SGS	M2316	
	TI	SBP8316	
	Toshiba	TMM331A	
TMM4164	Fairchild	F4164	
		F64K	
	Fujitsu	MB8264	
		MB8266	
	Hitachi	HM4864	
	IMS	IMS2600	
	Intel	2164	
	Motorola	MCM6665	
	National	NMC4164	
	NEC	μPD4164	
	OKI	MSM3764	
	TI	TMS4164	
TMP8048	AMD	8048	
	Fujitsu	MBL8048	
	Intel	8048	
	National	INS8048	
	NEC	μPD8048	
	Signetics	SCN8048	
TMP8085A	AMD	8085	
		8085A	
	~~Intel~~	~~8085~~	
		8085A	
	NEC	μPD8085	
TMP8155	AMD	8155	
	Intel	8155	
	NEC	μPD8155	
TMP8355	AMD	8355	
	Intel	8355	
	NEC	μPD8355	
TMP8755	Intel	8755A	
	NEC	μPD8755A	
TR4527	Fairchild	F4527	
	Hitachi	HD14527	
	Motorola	MC14527	
	National	CD4527	
	RCA	CD4527	
	SGS	HCF4527	
	Signetics	HEF4527	
	SSS	SCL4527	
	Toshiba	TC4527	

TRW LSI Products

Manufacturer Device	Replacement Source	Device	IC Master Page
CA2301	Amperex	BGY57	
	Motorola	MHW1222	
CA2322A	Amperex	BGY56	
	Motorola	MHW1221	
CA2622	Amperex	BGY58A	
	Motorola	MHW1341	
		MHW1342	
	TRW-LSI	CA3600	
CA3200	Amperex	BGY55A	
	Motorola	MHW3172	
CA3600	Amperex	BGY58A	
	Motorola	MHW1341	
		MHW1342	
	TRW-LSI	CA2622	
CA4100	Amperex	BGY74	
	Motorola	MHW4171	
		MHW5171	
	TRW-LSI	CA4101	
CA4101	Amperex	BGY74	
	Motorola	MHW4171	
		MHW5171	
	TRW-LSI	CA4100	
CA4200	Amperex	BGY75	
	Motorola	MHW4172	
		MHW5172	
	TRW-LSI	CA4201	
CA4201	Amperex	BGY75	
	Motorola	MHW4172	
		MHW5172	
	TRW-LSI	CA4200	
CA4600	Amperex	BGY78	
	~~Motorola~~	~~MHW4342~~	
		MHW5342	
	TRW-LSI	CA5600	
CA5600	Amperex	BGY78	
	~~Motorola~~	~~MHW4342~~	
		MHW5342	
	TRW-LSI	CA4600	

Manufacturer Device	Replacement Source	Device	IC Master Page
MPY016	**AMD**	**AM29516**	**701**
	Weitek	WTL1516	
		WTL9516	
MPY016H	AMD	29516	
	Synertek	**SY66016**	**1696**
	TRW-LSI	MPY16HJ	
	Weitek	WTL1016	
MPY16HJ	AMD	29516	
	Synertek	**SY66016**	**1696**
	TRW-LSI	**MPY016H**	**1164**
	Weitek	WTL1016	
TDC1010	AMD	AM29L510	

Unitrode

Manufacturer Device	Replacement Source	Device	IC Master Page
UC1524	**Exar**	**XR1524**	**3381**
	RCA	**CA1524**	**3602**
	SiliconG	SG1524	
	Sprague	ULS-8124	
	TI	SG1524	
UC1525	Sprague	ULS-8125	
UC1525A	**Exar**	**XR1525A**	**3381**
	Motorola	**SG1525A**	**3533**
	SiliconG	SG1525A	
	Siliconix	**PWM25A**	**3081**
	Sprague	ULS-8125	
	TI	SG1525A	
UC1526	SiliconG	SG3526	
	Sprague	ULN-8126	
		ULS-8126	
	Unitrode	UC526	
UC1527	Sprague	ULS-8127	
UC1527A	**Motorola**	**SG1527A**	**3533**
	SiliconG	SG1527A	
	Siliconix	**PWM27A**	**3081**
	Sprague	ULS-8125	
	TI	SG1527A	
UC2524	Sprague	ULQ-8124	
UC2525	Sprague	ULQ-8125	
UC2526	**Motorola**	**SG2526**	**3533**
	SiliconG	SG2526	
	Sprague	ULQ-8126	
UC2527	**Exar**	**XR2527A**	**3381**
	Motorola	**SG2527A**	**3533**
	SiliconG	SG2527A	
	Siliconix	PWM27B	
	Siltronics	PWM27B	
	Sprague	ULQ-8127	
UC3524	**Exar**	**XR3524**	**3381**
	RCA	**CA3524**	**3602**
	Signetics	**SG3524**	**3661**
	SiliconG	SG3524	
	Sprague	ULN-8124	
	TI	SG3524	
UC3525	SiliconG	SG3525	
	Siltronics	PWM25C	
	Sprague	ULN-8125	
	TI	SG3525	
UC3527	Sprague	ULN-8127	
UC493A	Motorola	TL493	
	TI	TL493	
UC494	Sprague	ULN-8194	
		ULS-8194	
		ULS8194	
	TI	TL494	
		TL594	
UC494A	**Exar**	**XR494**	**3380**
	Fairchild	μA494	
	Motorola	TL494	
	Sprague	ULS8194	
	TI	TL494	
UC495	Sprague	ULN-8195	
		ULS-8195	
		ULS8195	
	TI	TL495	
		TL595	
UC495A	**Exar**	**XR495**	**3380**
	Motorola	TL495	
	TI	TL495	
UC526	SiliconG	SG3526	
	Sprague	ULN-8126	
		ULS-8126	
	Unitrode	**UC1526**	**3709**

Universal Semiconductor, Inc.

Manufacturer Device	Replacement Source	Device	IC Master Page
HCM1200	Nitron	NC91200	
HCM360	Nitron	NC9360	
~~HCM540~~	~~Nitron~~	~~NC9540~~	
HCM720	Nitron	NC9720	
HCM960	Nitron	NC9960	

Manufacturer Device	Replacement Source	Device	IC Master Page
UM2147	AMD	AM2147	
	AMI	4017	
	Fujitsu	MBM2147	
	Hitachi	HM4847	
	Intel	2147	
	Intersil	IM2147	
	ITT	4547	
	Motorola	MCM2147	
	National	MM2147	
	NEC	μPD2147	
	Synertek	SY2147	
	TI	TMS2147	
	Toshiba	TMM315	
UM2332	AMD	AM9232	
	AMI	S68322	
		S68A332	
	Fairchild	F3532	
	GI	R094132	
		T094132	
	GTEMicro	2332	
	Hitachi	HN46332	
	Intersil	IM7332	
	Motorola	MC68332	
		MCM68332	
		MCM68A332	**4048**
	National	MM52132	
	NCR	2332	
		NCR2332	
	NEC	**μPD2332**	**4100**
	OKI	**MSM2932**	**4118**
	RCA	**CDM5333**	**1593**
	Rockwell	R2332	
	SiliconG	SG3532	
	SSS	SCM23C32	
	SMC	ROM4732	
	Synertek	**SY2332**	**4211**
	TI	**TMS4732**	**4226**
	Toshiba	TM2332	
		TMM333	
	VTI	**VT2332**	**4249**
UM2332-35	**Fairchild**	**F3532-35**	**1465**
UM2333-35	**Fairchild**	**F3533-35**	**1465**
UM2333-45	AMD	AM9233	
	AMI	**S2333**	**3932**
	Fairchild	F3533	
	GI	R09433	
	Intel	2332	
	NCR	2333	
		NCR2333	
	RCA	**CDM5332**	**1593**
	Signetics	2332	
	SSS	SCM23C33	
	Synertek	**SY2333**	**4211**
	VTI	**VT2333**	**4249**
UM2532	Hitachi	HN462532	
	Motorola	MCM2532	
	National	MM2532	
		NMC2532	
		TDA2530	
		TDA2532	
	Plessey	TDA2530	
	Siemens	TDA2530	
	SiliconG	SG2532	
	TI	TMS2532	
UM2732	AMD	AM2732	
	Hitachi	HN462732	
	Intel	2732	
		2732A	
		M2732	
	Mitsubishi	M5L2732	
	National	MM2732	
		NMC2732	
	NEC	μPD2732	
	Toshiba	TMM2732	
		TMM324C	

VLSI Technology

Manufacturer Device	Replacement Source	Device	IC Master Page
VL4500	TI	TMS4500	
VL4500A	**TI**	**TMS4500A**	**4221**
VL4501	TI	TMS4501	
VT23128	AMD	AM92128	
	AMI	**S23128**	**3935**
	~~GI~~	~~R09128~~	
	Hitachi	HN613128	
	Motorola	MCM63128	
	National	S2128	
	NCR	NCR23128	
	NEC	μPD2/83128	
		μPD23/83128	
	OKI	**MSM38128**	**4118**
		(Continued)	

◆ ~~Discontinued~~

Bold face device numbers indicate manufacturers data is provided in the IC Master on the pages noted.

VLSI Technology (Cont'd)

Manufacturer Device	Replacement Source	Device	IC Master Page
VT23128	**Signetics**	**23128-30**	**4202**
	Synertek	SY23128	
VT2332	AMD	AM9232	
	AMI	S68322	
		S68A332	
	Fairchild	F3532	
	GI	R094132	
		T094132	
	GTEMicro	2332	
	Hitachi	HN46332	
	Intersil	IM7332	
	Motorola	MC68332	
		MCM68332	
		MCM68A332	**4048**
	National	MM52132	
	NCR	2332	
		NCR2332	
	NEC	**μPD2332**	**4100**
	OKI	**MSM2932**	**4118**
	RCA	**CDM5333**	**1593**
	Rockwell	R2332	
	SiliconG	SG3532	
	SSS	SCM23C32	
	SMC	ROM4732	
	Synertek	**SY2332**	**4211**
	TI	**TMS4732**	**4226**
	Toshiba	TM2332	
		TMM333	
	Universal	UM2332	
VT2333	AMD	AM9233	
	AMI	**S2333**	**3932**
	Fairchild	F3533	
	GI	R09433	
	Intel	2332	
	NCR	2333	
		NCR2333	
	RCA	**CDM5332**	**1593**
	Signetics	2332	
	SSS	SCM23C33	
	Synertek	**SY2333**	**4211**
	Universal	UM2333-45	
VT2364	AMI	S68364	
	GI	R09464	
	GTEMicro	G5364	
	Intersil	IM7364	
	MicroPwr	MP2364	
	Mitsubishi	M5L2364	
	Mostek	MK36000	
	Motorola	**MCM68364**	
			4048,4054
	National	MM5235	
	NCR	NCR2364	
	RCA	**CDM5364**	**1593**
	SMOS	SMM2364	
	SGS	M36000	
	Signetics	2664A	
	SSS	SCM23C64	
		SCM23C65	
	SMC	ROM36000	
	Synertek	**SY2364**	**4211**
	TI	**TMS4764**	**4225**
	Toshiba	TM2364	
VT2365	AMD	AM9265	
	GI	R09864	
	GTEMicro	G5365	
	Hitachi	HN61364	
	Mostek	MK37000	
	RCA	CDM5365	
	Signetics	**2364-20**	**4196**
	Synertek	**SY2365**	**4211**
	Toshiba	TMM2365	
VT2366	GTEMicro	G5365	
	National	NMC2564	
	TI	TMS2564	

Weitek Corporation

Manufacturer Device	Replacement Source	Device	IC Master Page
SC8164	AMD	AM9264	
	AMI	S4264	
		S68A364	**3933**
	GTEMicro	2364-3	
	Hitachi	HN48364	
	Mostek	MK36000-5	
	Motorola	MCM68365	
		MCM68366	
	National	MM52164	
	NCR	2364	
	NEC	UPD2/8364-30	
		μPD23/8364-30	
	OKI	MSM2965	

(Continued)

Manufacturer Device	Replacement Source	Device	IC Master Page
SC8164	Signetics	2664A-30	
	Synertek	**SY2364-3**	**4211**
	Toshiba	TMM2364	
WTL1010	**TRW-LSI**	**TDC1010**	**1164**
WTL1016	AMD	29516	
	Synertek	**SY56016**	**1696**
	TRW-LSI	**MPY016H**	**1164**
		MPY16HJ	
WTL1516	**AMD**	**AM29516**	**701**
	TRW-LSI	MPY016	
	Weitek	WTL9516	
WTL1517	**AMD**	**AM29517**	**701**
	Weitek	WTL9517	
WTL9516	**AMD**	**AM29516**	**701**
	TRW-LSI	MPY016	
	Weitek	WTL1516	
WTL9517	**AMD**	**AM29517**	**701**
	Weitek	WTL1517	

Western Digital

Manufacturer Device	Replacement Source	Device	IC Master Page
BR1941	SMC	COM5016	
FD1761	SMC	FDC1761	
FD1763	SMC	FDC1763	
FD1765	SMC	FDC1765	
FD1767	SMC	FDC1767	
FD1771	National	INS1771	
FD1791	Fujitsu	MB8876	
	Siemens	SAB1791	
	SMC	FDC1791	
	Synertek	SY1791	
FD1792	SMC	FDC1792	
FD1793	Fujitsu	MB8877	
	Siemens	SAB1793	
	SMC	FDC1793	
	Synertek	SY1793	
FD1794	SMC	FDC1794	
FD1795	Siemens	SAB1795	
	SMC	FDC1795	
FD1797	Siemens	SAB1797	
	SMC	FDC1797	
TR1402	AMI	S1602	
	Fairchild	3730	
		F6850	**1463**
	Fujitsu	MB8868A	
	GI	AY3-1015	
	Hitachi	HD6850	
		HD68A50	
	Motorola	**MC6850**	**1505**
	National	MM5303	
	RCA	**CDP6402**	**1595**
	SMC	COM2017	
		COM2502H	
		COM8017	
	Thomson-CSF		
		EF6850	
	Western	TR1602	
		TR1863	
TR1602	AMI	S1602	
	Fairchild	3730	
		F6850	**1463**
	Fujitsu	MB8868A	
	GI	AY3-1015	
	Hitachi	HD6850	
		HD68A50	
	Motorola	**MC6850**	**1505**
	National	MM5303	
	RCA	**CDP6402**	**1595**
	SMC	COM2017	
		COM2502H	
		COM8017	
	Thomson-CSF		
		EF6850	
	Western	TR1402	
		TR1863	
TR1863	AMI	S1602	
	Fairchild	3730	
		F6850	**1463**
	Fujitsu	MB8868A	
	GI	AY3-1015	
	Hitachi	HD6850	
		HD68A50	
	Motorola	**MC6850**	**1505**
	National	MM5303	
	RCA	**CDP6402**	**1595**
	SMC	COM2017	
		COM2502H	
		COM8017	
	Thomson-CSF		
		EF6850	
	Western	TR1402	
		TR1602	

Manufacturer Device	Replacement Source	Device	IC Master Page
TR1983	AMD	8251	
		AM9551	**1436**
	Intel	8251A	
	National	DP8251	
		INS8251	
	NEC	μPB8251	
	SMC	COM8251A	
UC1671	SMC	COM1671	
WD1943	GI	AY5-8116	
	SMC	COM8116	

Xicor

Manufacturer Device	Replacement Source	Device	IC Master Page
X2001	NCR	NCR52001	
		S2001	
X2002	NCR	NCR52002	
		S2002	
X2004	NCR	NCR52004	
X2201	GI	ER5901	
	Nitron	NC7053	
X2210	NCR	NCR52210	
X2211	NCR	NCR52211	
X2212	NCR	NCR52212	
X2816	GI	5916	
X2816A	Hitachi	HN48016	
	Intel	2816	
	National	NMC2816	
	NCR	NCR2161	
	Rockwell	5213	
		52B13	
	SEEQ	5213	
		52B13	
X2864	IMS	IMS3630	
	SEEQ	52B33	
X2864A	EXEL	XLS2864A	

Zilog

Manufacturer Device	Replacement Source	Device	IC Master Page
Z6104	EMM-SESCO	4044	
	Intel	2141	
		2141A	
	Intersil	IM7141	
	Mostek	MK4104	
	Motorola	MCM6641	
	National	MM2141	
	NEC	μPD4104	
	TI	TMS4044	
Z6132	National	NMC6132	
Z8	SGS	Z8	
Z80	Mostek	MK3880	
	NEC	μPD780	
	SGS	Z80-CPU	
	Zilog	Z80-CPU	
Z80-CPU	Mostek	MK3880	
	NEC	μPD780	
	SGS	Z80-CPU	
	Zilog	**Z80**	**1738**
Z80-CTC	Mostek	MK3882	
	SGS	Z80-CTC	
Z80-DART	SGS	Z80-DART	
Z80-DMA	Mostek	MK3883	
	SGS	Z80-DMA	
Z80-PIO	Mostek	MK3881	
	SGS	Z80-PI	
Z80-SIO	Mostek	MK3884	
		MK3885	
		MK3887	
	SGS	Z80-SIO	
Z8000	SGS	Z8000	
Z8001	AMD	Z8001	
	SGS	Z8001	
Z8002	AMD	Z8002	
	SGS	Z8002	
Z8010	AMD	Z8010	
	SGS	Z8010	
Z8016	AMD	Z8016	
Z8030	AMD	Z8030	
Z8031	AMD	Z8031	
Z8036	AMD	Z8036	
	SGS	Z8036	
Z8038	AMD	Z8038	
	SGS	Z8038	
Z8060	AMD	Z8060	
	SGS	Z8060	
Z8090	SGS	Z8090	
Z8400	SGS	Z8400	
Z8410	SGS	Z8410	
Z8420	SGS	Z8420	
Z8430	SGS	Z8430	
Z8440	SGS	Z8440	
Z8441	SGS	Z8441	
Z8442	SGS	Z8442	

Manufacturer Device	Replacement Source	Device	IC Master Page
Z8449	SGS	Z8449	
Z8470	SGS	Z8470	
Z8530	AMD	Z8530	
Z8531	AMD	Z8531	
Z8536	AMD	Z8536	
Z8538	AMD	Z8538	
Z8590	AMD	Z8590	
Z8591	AMD	Z8591	
Z8592	AMD	Z8592	
Z8593	AMD	Z8593	
Z8594	AMD	Z8594	
Z8601	SGS	Z8601	
	Synertek	Z8601	
Z8602	SGS	Z8602	
	Synertek	Z8602	
Z8603	Synertek	Z8603	
Z8611	SGS	Z8611	
	Synertek	Z8611	
Z8612	SGS	Z8612	

Zytrex Corp.

Manufacturer Device	Replacement Source	Device	IC Master Page
ZX-CAL-14H4	**MMI**	**HAL14H4C**	
			4776,4782
	SPI	**SP814H4**	**4826**
	Si-Fab	**HCT14H4**	**4827**
ZX-CAL10H8	**MMI**	**HAL10H8C**	
			4776,4782
	SPI	**SP810H8**	**4826**
	Si-Fab	**HCT10H8**	**4827**
ZX-CAL10L8	**MMI**	**HAL10L8C**	
			4776,4782
	SPI	**SP810L8**	**4826**
	Si-Fab	**HCT10L8**	**4827**
ZX-CAL12H6C	**MMI**	**HAL12H6C**	
			4776,4782
	SPI	**SP812H6**	**4826**
	Si-Fab	HCT12H6	
ZX-CAL12L6	**MMI**	**HAL12L6C**	
			4776,4782
	SPI	**SP812L6**	**4826**
	Si-Fab	HCT12L6	
ZX-CAL14L4	**MMI**	**HAL14L4C**	
			4776,4782
	SPI	**SP814L4**	**4826**
	Si-Fab	**HCT14L4**	**4827**
ZX-CAL16L8	MMI	C-HAL16L8C	
		HAL16L8C	
			4776,4784
	SPI	**SP816L8**	**4826**
	Si-Fab	**HCT16L8**	**4827**
ZX-CAL16R4	MMI	C-HAL16R4C	
		HAL16R4C	
			4776,4784
	SPI	**SP816R4**	**4826**
	Si-Fab	**HCT16R4**	**4827**
ZX-CAL16R6	MMI	C-HAL16R6C	
		HAL16R6C	
			4776,4784
	SPI	**SP816R6**	**4826**
	Si-Fab	**HCT16R6**	**4827**
ZX74HCT138-2	Motorola	MC74HCT138	
	RCA	**CD74HCT138**	**842**
	SPI	**SP74HCT138**	**844**
ZX74HCT139-2	**RCA**	**CD74HCT139**	**842**
	SPI	**SP74HCT139**	**844**
	Signetics	PCF74HCT139	
ZX74HCT160-2	**RCA**	**CD74HCT160**	**842**
	Signetics	PCF74HCT160	
ZX74HCT161-2	**RCA**	**CD74HCT161**	**842**
	Signetics	PCF74HCT161	
ZX74HCT162-2	**RCA**	**CD74HCT162**	**842**
	Signetics	PCF74HCT162	
ZX74HCT163-2	**RCA**	**CD74HCT163**	**842**
	Signetics	PCF74HCT163	
ZX74HCT240-2	Motorola	MC74HCT240	
	RCA	**CD74HCT240**	**842**
	SPI	**SP74HCT240**	**844**
	Signetics	PCF74HCT240	
ZX74HCT241-2	Motorola	MC74HCT241	
	RCA	**CD74HCT241**	**842**
	SPI	**SP74HCT241**	**844**
	Signetics	PCF74HCT241	
ZX74HCT244-2	Motorola	MC74HCT244	
	RCA	**CD74HCT244**	**842**
	SPI	**SP74HCT244**	**844**
	Signetics	PCF74HCT244	
ZX74HCT373-2	Motorola	MC74HCT373	
	RCA	**CD74HCT373**	**842**
	SPI	**SP74HCT373**	**844**
ZX74HCT374-2	Motorola	MC74HCT374	
	RCA	**CD74HCT374**	**842**
	SPI	**SP74HCT374**	**844**

◆ Discontinued

The manufacturers report their devices can be used as direct replacements.
Performance details often differ, so compare the specifications considering your requirements.

Manufacturer Device	Replacement Source	Device	IC Master Page
Zytrex Corp.			**(Cont'd)**
ZX74HCT533	Motorola	MC74HCT533	
	RCA	CD74HCT533	
ZX74HCT534-2	Motorola	MC74HCT534	
	RCA	CD74HCT534	
	Signetics	PCF74HCT534	
ZX74HCT540-2	Motorola	MC74HCT540	
	RCA	CD74HCT540	
	SPI	**SP74HCT540**	**844**
ZX74HCT542-2	Motorola	MC74HCT542	
	RCA	CD74HCT541	
	SPI	**SP74HCT541**	**844**
ZX74HCT564-2	RCA	CD54HCT564	
	Signetics	PCF54HCT564	
ZX74HCT573-2	RCA	CD74HCT53	
	SPI	**SP74HCT573**	**844**
ZX74HCT574-2	**SPI**	**SP74HCT574**	**844**
ZX74HCT640-2	Motorola	MC74HCT640	
	RCA	CD74HCT640	
	Signetics	PCF74HCT640	
ZX74HCT643-2	Motorola	MC74HCT643	
	RCA	CD74HCT643	
	Signetics	PCF74HCT643	

ALTERNATE SOURCE DIRECTORY

◆ Discontinued

Bold face device numbers indicate manufacturers data is provided in the IC Master on the pages noted.

Order 1984 IC MASTER Form

Hearst Business Communications, Inc./UTP Division
645 Stewart Ave., Garden City, NY 11530 (516) 222-2500 Ext. 314

☐ Enclosed is my check $95.00 (plus sales tax: California 6½%, Illinois 4%, New York 8¼%)
☐ Purchase order enclosed ☐ Charge to my credit card ☐ Visa ☐ MasterCard

Card No. _____ Exp. Date _____

Signature _____

Ship to: ☐ Company Address ☐ Home Address

Name _____ Title _____

Company _____

Company Address _____

City/State/Zip _____

Home Address _____

City/State/Zip _____

Order 1984 IC MASTER Form

Hearst Business Communications, Inc./UTP Division
645 Stewart Ave., Garden City, NY 11530 (516) 222-2500 Ext. 314

☐ Enclosed is my check $95.00 (plus sales tax: California 6½%, Illinois 4%, New York 8¼%)
☐ Purchase order enclosed ☐ Charge to my credit card ☐ Visa ☐ MasterCard

Card No. _____ Exp. Date _____

Signature _____

Ship to: ☐ Company Address ☐ Home Address

Name _____ Title _____

Company _____

Company Address _____

City/State/Zip _____

Home Address _____

City/State/Zip _____

Integrated Circuits Magazine
FREE NEW SUBSCRIPTION

I wish to receive or continue to receive Integrated Circuits Magazine ☐ Yes ☐ No

1 Your principal job function: ☐ INSERT LETTER

- A General and corporate management
- B Design and development engineering (circuits, components, equipment systems)
- C Engineering services (evaluation, quality control, reliability, standards, test)
- D Basic research
- E Manufacturing and production
- F Engineering support (draftsman, lab assistant, technician)
- L Purchasing and procurement
- M Marketing including sales
- N Other (describe) .....

My principal job responsibility is: ☐ INSERT NUMBER

- 4. Management other than engineering
- 3. Engineering Management
- 2. Engineering
- 1. Other (describe).....

2 Number of Engineers who specify or recommend IC's in my department ☐ INSERT LETTER

- H 1-4
- I 5-10
- J 11-99
- K 100-249
- L Over 250

3 Number of employees at this address ☐ INSERT LETTER

- A Under 25
- B 26-99
- C 100-499
- D 500-999
- E 1000-1999
- F Over 2000

4 IC Product Areas I Specialize in (Circle all numbers that apply)

- 12. Digital
- 13. Interface
- 14. Linear
- 15. Memory
- 16. Microprocessor
- 17. Microcomputer Boards
- 18. Custom/Semicustom IC's
- 19. Development Systems
- 20. Military IC's
- 21. PROM Programmers
- 22. None of the above

Name .....
Company .....
Address .....
City ..... **State** ..... **Zip** .....
Signature ..... **Date** .....

Please give us the central telephone number for your plant location, (not your own number) unless it happens to be the same (.....) .....

Subscription cannot be entered without complete qualifying information

CHECK ONE ONLY

- ☐ New Free Subscription
- ☐ Renewal Free Subscription
- ☐ Address Correction Requested (affix old mailing label)

5 The primary end product (or service performed) at your plant, and the product (or service) that is your own work. (insert number in each box even if the same)

☐ **Plant** ☐ **Your Own Work**

- 01. Computers
- 03. Computers — Peripheral Equipment
- 20. Systems Integration
- 12. Office & Business Machines
- 05. Communications Systems and Equipment
- 06. Navigation and Guidance Systems and Equipment
- 11. Aircraft, Missiles, Space and Ground Support Equipment
- 23. Oceanography and Support Equipment
- 04. Test, Measurement and Instrumentation Equipment
- 24. Medical Electronics
- 08. Industrial Controls, Systems, Equipment and Robotics
- 07. Consumer Electronics and Appliances
- 09. Components and Sub-Assemblies
- 10. Materials and Hardware
- 13. Other Original Equipment Manufacturers Incorporating Electronic/Electromechanical Equipment in their End Product
- 14. Independent Research & Testing Laboratories
- 21. Consultants
- 15. Government & Military
- 16. Companies Using ELECTRONIC Products in Their Manufacturing Process
- 17. Commercial Users of Electronic Equipment
- 19. Electronic Distribution
- 18. Education
- 22. Manufacturer's Representative
- 25. Other (describe).....

NO POSTAGE NECESSARY IF MAILED IN THE UNITED STATES

BUSINESS REPLY MAIL
FIRST CLASS PERMIT NO. 2209 GARDEN CITY, NEW YORK, U.S.A.

POSTAGE WILL BE PAID BY ADDRESSEE

IC MASTER

HEARST BUSINESS COMMUNICATIONS, INC./
UTP DIVISION
645 Stewart Avenue
Garden City, NY 11530

ATTN: Marie Botta

NO POSTAGE NECESSARY IF MAILED IN THE UNITED STATES

BUSINESS REPLY MAIL
FIRST CLASS PERMIT NO. 2209 GARDEN CITY, NEW YORK, U.S.A.

POSTAGE WILL BE PAID BY ADDRESSEE

IC MASTER

HEARST BUSINESS COMMUNICATIONS, INC./
UTP DIVISION
645 Stewart Avenue
Garden City, NY 11530

ATTN: Marie Botta

AFFIX POSTAGE HERE

Integrated Circuits MAGAZINE

645 STEWART AVE., GARDEN CITY, N.Y. 11530

Our CMOS puts more functions on chip

COMBINING ANALOG & DIGITAL REDUCES SYSTEMS TO A SINGLE CHIP

At GE/Intersil we've been committed to CMOS technology for years because of its low power consumption and excellent immunity to noise. Now we're packing more and more functions on one chip, and we're combining analog and digital functions to reduce whole systems to a single chip. Our CMOS devices with combined analog and digital functions include:

- First 14-bit and 16-bit D/As with on-chip EPROM to correct non-linearity, the ICL7134 and ICL7145
- First 3½-digit A/Ds with on-chip LCD or LED driver, the ICL7106 and ICL7107 families
- First low-cost 12-bit microprocessor-interfaced A/D, the ICL7109
- First 1μV offset precision op amps, the ICL7650 and ICL7652
- First power supply circuit to convert +5 volts to −5 volts, the ICL7660

VIDEO SWITCH LEADS LIST OF OTHER OUTSTANDING CMOS DEVICES

Plus, GE/Intersil offers full lines of other CMOS devices, such as the IH5341, the world's first CMOS video/RF switch with 70dB "OFF" isolation at 10MHz; and the ICM7243 and ICM7233, multi-character alphanumeric LED and LCD drivers.

We've also got timers that boast ½mW power consumption and eliminate switching spikes, the ICM7555 and ICM7556; general-purpose single, dual, triple and quad op amps with power drain as low as 20μW per amp, the ICL7611 through ICL7642; 3μA I_Q positive and negative micropower voltage regulators, the ICL7663 and ICL7664; and a micropower over-and-under voltage detector, the ICL7665.

WITH MORE IN THE FUTURE

In coming months we'll be adding the following devices to our long list of CMOS products:

- A new family of dual-level-metal, 2-micron gate arrays with up to 6,000 gate equivalents to supplement our single-level-metal, 4-micron gate arrays with up to 2,000 gate equivalents
- A full family of 8-bit microcontrollers
- First 4½-digit A/D with on-chip LCD driver
- First 14-bit, 40-microsecond A/D with on-chip EPROM to correct non-linearity
- Complete 12-bit D/A with on-chip op amp, reference and versatile μP interface

FREE DATA BOOK

There's much more to tell, so call for your FREE DATA BOOK today: 800-538-8157, Ext. 968 (In California, call: 800-672-3470, Ext. 968). Get your copy of the hottest ideas in CMOS and put power consumption on ice.