INTERCONTINENTAL MICRO SYSTEMS CORP.

PERSONALITY BOARD

USER'S GUIDE

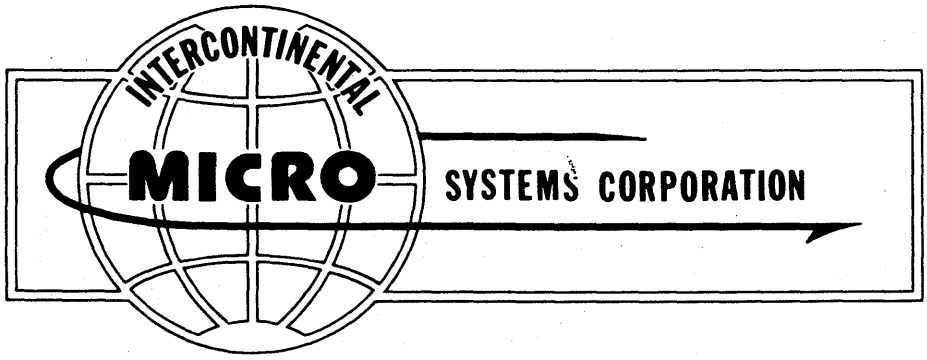

4015 Leaverton Court • Anaheim, California • (714) 630-0964 • Telex: 678401 - TAB-IRIN

TABLE OF CONTENTS

PERSONALITY BOARD INDEX..... 2

INTRODUCTION..... 2

DESCRIPTION..... 3

RS232C/NO MODEM
- Function..... 4
- Interface Requirements
  - J1(CPU)..... 5
  - J2(PERIPHERAL)..... 6
- Connector Requirements..... 6
- Set Up Instructions..... 7

RS232C/FULL MODEM
- Function..... 9
- Interface Requirements
  - J1(CPU)..... 9
  - J2(PERIPHERAL)..... 10
- Connector Requirements..... 10
- Set Up Instructions..... 11

RS422 SERIAL COMMUNICATIONS
- Function..... 12
- Interface Requirements
  - J1(CPU)..... 13
  - J2(TERMINAL)..... 14
- Connector Requirements..... 14
- Set Up Instructions..... 15

LONG DISTANCE SERIAL COMMUNICATIONS
- Function..... 16
- Interface Requirements
  - J1(CPU)..... 17
  - J2(PERIPHERAL)..... 18
- Connector Requirements..... 18
- Set Up Instructions..... 19

FLOPPY DISK DRIVE
- Function..... 20
- Interface Requirements
  - FPB100
    - J1(CPU)..... 21
    - J2(MODIFIED DRIVE INTERFACE)..... 22
  - FPB100-11
    - J1(MODIFIED DRIVE INTERFACE)..... 23
    - J2(8-INCH DRIVE INTERFACE)..... 24
  - FPB100-22
    - J1(MODIFIED DRIVE INTERFACE)..... 26
    - J2(5 1/4-INCH DRIVE INTERFACE)..... 27
- Connector Requirements..... 28
- Set Up Instructions..... 29

CENTRONICS PRINTER
Function..... 30
Interface Requirements
J1(CPU)..... 30
J2(PRINTER)..... 31
Connector Requirements..... 32
Set Up Instructions..... 32

PRIAM INTELLIGENT HARD DISK
Function..... 33
Interface Requirements
PRI100
J1(CPU)..... 34
J2(MODIFIED PRIAM)..... 35
PRI100-1
J1(MODIFIED PRIAM)..... 36
J2(PRIAM)..... 37
Connector Requirements..... 38
Set Up Instructions..... 38

SHUGART ASSOCIATES SYSTEM INTERFACE
Function..... 39
Interface Requirements
SAS100
J1(CPU)..... 40
J2(MODIFIED SASI)..... 41
SAS100-1
J1(MODIFIED SASI)..... 42
J2(SASI)..... 43
Connector Requirements..... 45
Set Up Instructions..... 45

CLOCK/CALENDAR(WITH BATTERY BACKUP)
Function..... 46
Interface Requirements
J1(CPU)..... 47
Connector Requirements..... 48
Set Up Instructions..... 48

WARRANTY..... 49

****
* COPYRIGHT (C) 1983 Intercontinental Micro Systems Corp *
****

All information contained herein is proprietary to Intercontinental Micro Systems Incorporated and may not be reproduced, transmitted, transcribed, stored in a retrieval system, or translated into any language or computer language, in any form or by means, electronic, mechanical, magnetic, optical, chemical, manual or otherwise, without the prior written permission of Intercontinental Micro Systems, Corp. 4015 Leaverton Court, Anaheim, California 92807.

DISCLAIMER

Intercontinental Micro Systems Corp. makes no representations or warranties with respect to the contents hereof and specifically disclaims any implied warranties of merchantability or fitness for any particular purpose. Intercontinental Micro Systems Corp. reserves the right to revise this publication and to make changes from time to time in the content hereof without obligation of Intercontinental Micro Systems Corp. to notify any person of such revision or changes.

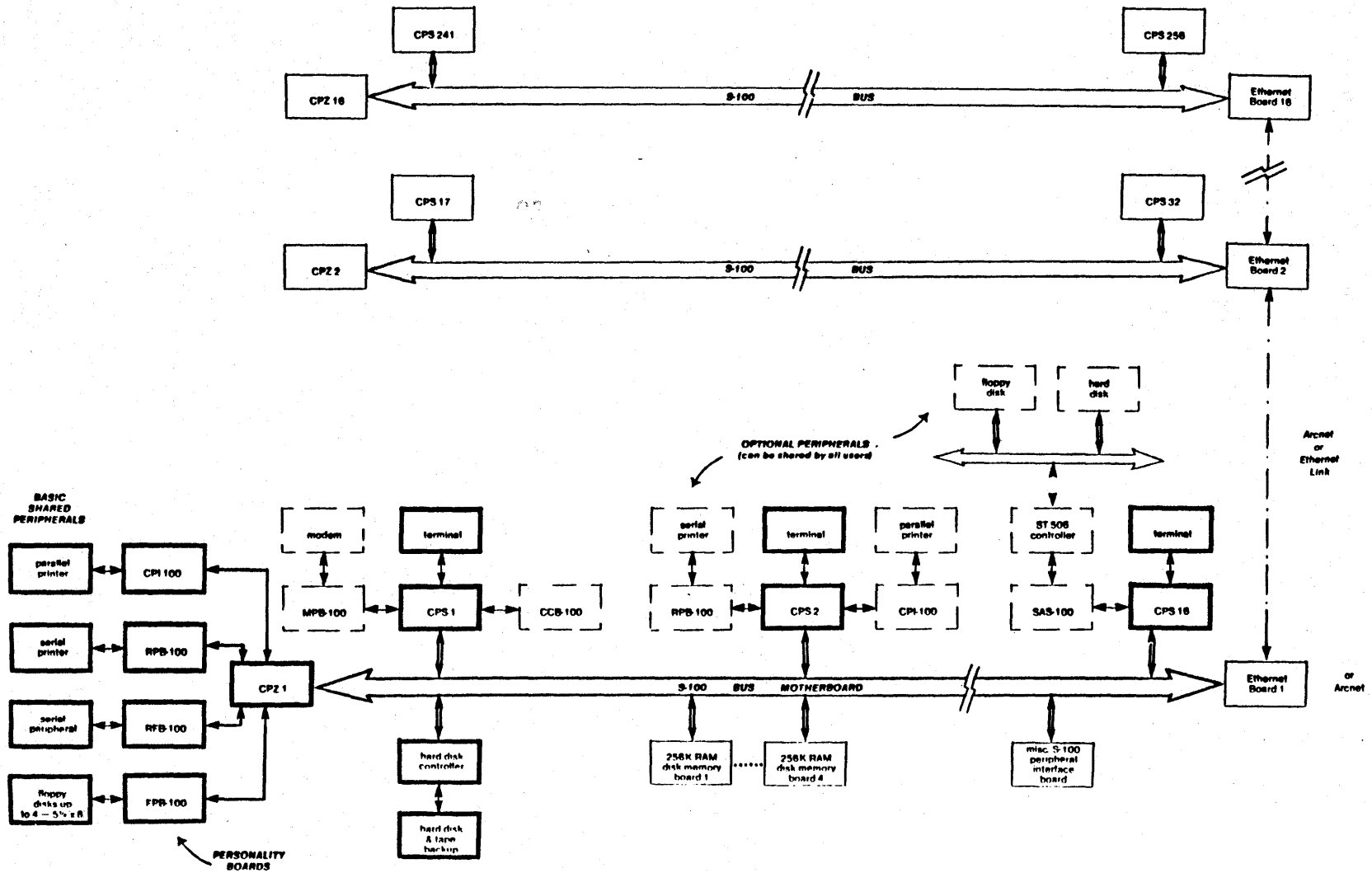

TURBODOS MASTER / SLAVE NETWORK ARCHITECTURE

**** PERSONALITY BOARD USERS GUIDE ****

PERSONALITY BOARD INDEX

		part number
1	RS232C/ NO MODEM	RPB100
2	RS232C/ FULL MODEM	MPB100
3	RS422 SERIAL COMMUNICATIONS	FTT100
4	LONG DISTANCE SERIAL COMMUNICATIONS	LDS100
5	FLOPPY DISK	FPB100
6	CENTRONICS PRINTER	CPI100
7	PRIAM INTELLIGENT HARD DISK	PRI100
8	SHUGART ASSOCIATES SYSTEMS INTERFACE	SAS100
9	CLOCK/CALENDAR (WITH BATTERY BACKUP)	CCB100

INTRODUCTION

Since the introduction of the S100 Bus standard, compatability amongst S100 Bus products has been difficult to achieve. The CPZ48000 Single Board Central Processor(SBCP) solved these problems by effectively replacing four to five boards. By implementing the functions necessary to construct a system all on one board, interface and timing problems quickly disappeared. One problem, however, remained. The problem was to find an effective way of interfacing the SBCP with a great variety of peripheral devices without the necessity of modifying the SBCP for each devise. In the past, this entailed the necessity of modifying the PCB's with etch cuts and straps. This usually resulted in unattractive modifications to say nothing of the resultant inflexability for later integrating still other peripheral devices. This problem was effectively solved by customizing the peripheral interfaces through "personality" boards. Thus, the floppy, serial and parallel interfaces were brought out to connectors at the top of the board and those interfaces were tailored through small printed circuit boards connected to the main board by ribbon cables. In short, a personality board is a small circuit board containing line drivers/receivers, logic and other circuitry required to connect the CPZ48000 SBCP I/O controllers (Floppy Disk, Serial Controller and Parallel Controller) to a variety of peripheral devices.

ICM'S PERSONALITY BOARDS offer a very versatile, cost effective technique for peripheral interface. The personality boards mount on the back of your system's mainframe or chassis. Whenever you decide to change peripherals or protocols, all you have to do is change the small, inexpensive personality board - not make expensive and complicated changes to your CPU board. ICM has existing PERSONALITY BOARDS and Software Drivers for most peripherals and protocols on the market today. New PERSONALITY BOARDS are constantly being developed as new peripherals enter the market.

PERSONALITY BOARDS are not only cost effective and inexpensive, they also protect the CPZ-48000 SBC whenever new or different peripherals are placed on your system. First, since the buffers and drivers necessary to interface to the peripherals are on the personality board and not on the CPZ, there is no need to make costly and complicated cuts or jumpers on the CPZ. Second, any current surges on the communication lines between the CPZ and the peripheral will blow the surge suppressors on the Personality Board and not the CPZ. Thus you only have to replace a small, inexpensive board not a large, expensive SBC board.

Typical S100 Bus chassis provide DB25 connector cutouts at the chassis rear. The personality boards are designed to mount on DB25 connectors which in turn are mounted in the cutouts. In this manner, the personality boards do not require additional S100 Bus slots and are conveniently mounted within the chassis. An additional connector is provided to connect the personality board to the SBCP. The connection is made with a simple point-to-point flat ribbon cable. See figure 1.

Intercontinental Micro Systems Corporation invites you, our valued customer, to submit your interface requirements if they are not covered by the line of personality boards available. Our engineering staff will evaluate those requirements and advice you of the feasibility of constructing your custom personality board.

DESCRIPTION

Each personality board shall be described in the following sections. A brief functional description, interface requirements, mating connector requirements and set-up instructions, where applicable, are given for each board.

****
* WARNING *
****

Do not install or remove any personality board while the CPZ48000 SBCP or the CPS-MX SBSP power is on. This may result in damage to the personality board and/or the CPU board.

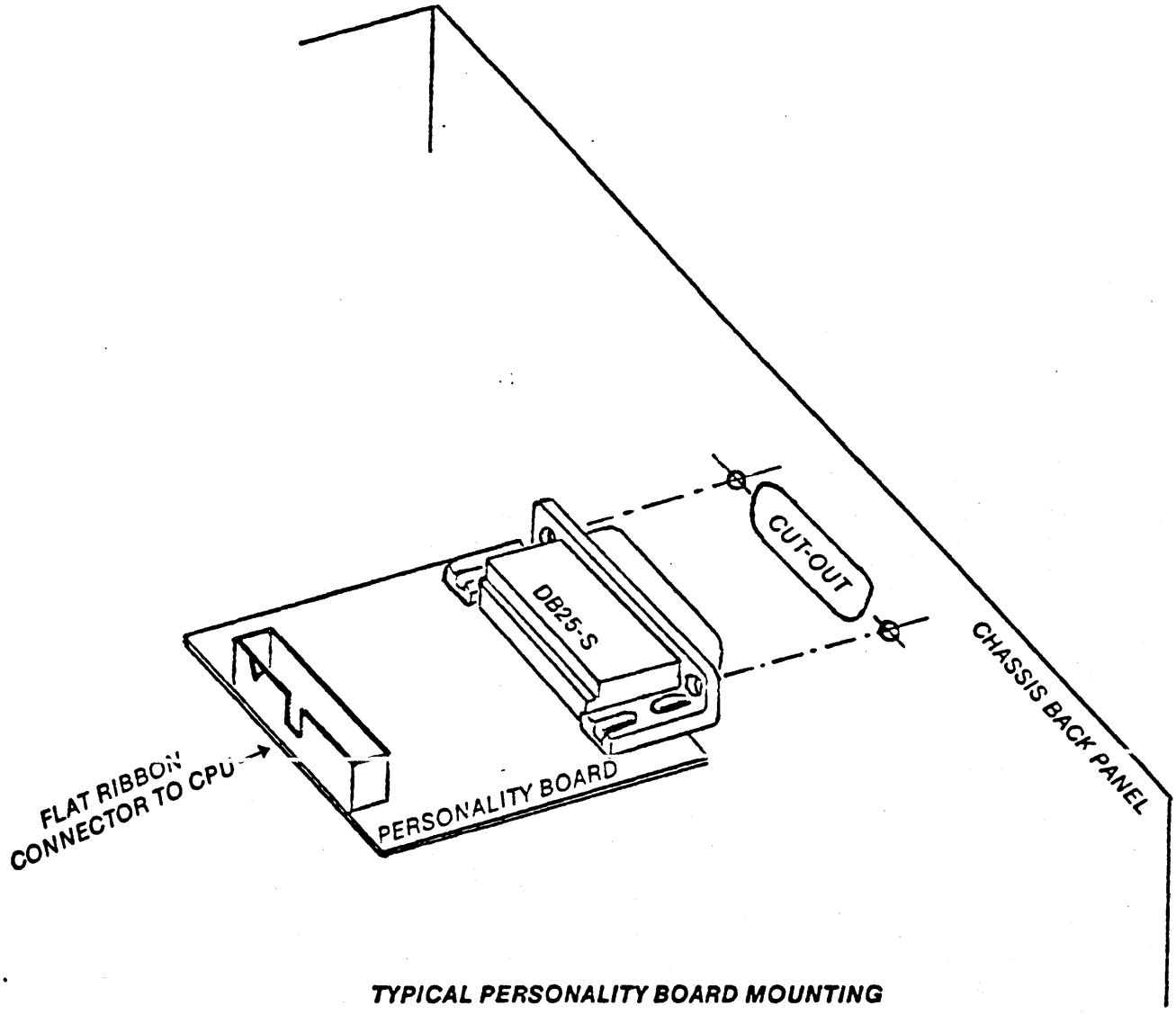

TYPICAL PERSONALITY BOARD MOUNTING

PERSONALITY BOARD - RS232/NO MODEM

PART NUMBER - RPB100

FUNCTION

The RS232/NO MODEM Personality Board provides RS232 drivers and receivers, terminations and jumper options to interface any simple RS232 device such as CRT terminals, serial printers or any other serial device not requiring an extensive handshake protocol.

This module may be used with either the CPZ48000 SBCP or the CPS-MX SBSP.

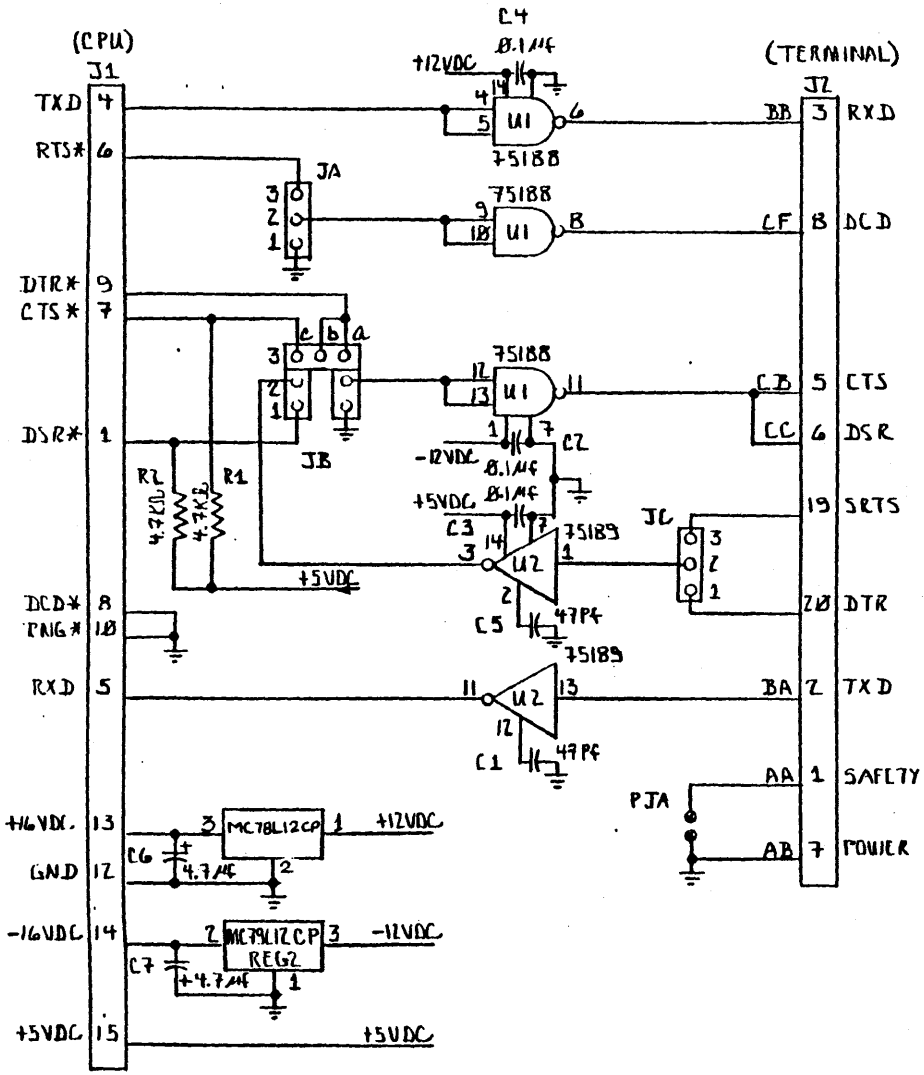

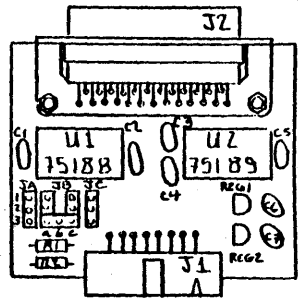

JUMPER OPTIONS

(1) 3 WIRE / NO HANDSHAKE :

JA	JB	JC
1-2	A1-A2	1-2 = CRT
	C1-C2	2-3 = PRINTER (CHECK PRINTER MANUAL)
	B3-C3	

(2) FULL HANDSHAKE :

JA	JB	JC
2-3	A2-A3	1-2 = CRT
	C2-C3 OR	2-3 = PRINTER (CHECK PRINTER MANUAL)
	C1-C2	

DESIGNED:	
REV: A	SCHEMATIC/LOGIC DIAGRAM FOR RS 232 / NO MODEM PERSONALITY BOARD
	PART NO. RPB 1800
	SHT OF

INTERFACE REQUIREMENTS

Connects to J2 or J3 of the CPZ48000 or the CCPS-MX.

J1(CPU)

PIN NO.	SIGNAL NAME	DESCRIPTION
1	DSR*	DATA SET READY TO CPU
2	n/c	n/c
3	n/c	n/c
4	TxD	TRANSMIT DATA FROM CPU
5	RxD	RECEIVE DATA TO CPU
6	RTS*	REQUEST TO SEND DATA FROM CPU
7	CTS*	CLEAR TO SEND TO CPU
8	DCD*	DATA CARRIER DETECT TO CPU
9	DTR*	DATA TERMINAL READY FROM CPU
10	RNG*	RINGING INDICATOR TO CPU
11	n/c	n/c
12	GND	GROUND
13	+16VDC	+16VDC
14	-16VDC	-16VDC
15	+5VDC	+5VDC
16	n/c	n/c

J2(PERIPHERAL)

PIN NO.	SIGNAL NAME	DESCRIPTION
1	SAFETY GND	SAFETY GROUND
2	TXD	TRANSMIT DATA TO PERIPHERAL
3	RXD	RECEIVE DATA FROM PERIPHERAL
4	n/c	n/c
5	CTS*	CLEAR TO SEND TO PERIPHERAL
6	DSR*	DATA SET READY TO PERIPHERAL
7	POWER GND	POWER GROUND
8	DCD*	DATA CARRIER DETECT TO PERIPHERAL
9	n/c	n/c
10	n/c	n/c
11	n/c	n/c
12	n/c	n/c
13	n/c	n/c
14	n/c	n/c
15	n/c	n/c
16	n/c	n/c
17	n/c	n/c
18	n/c	n/c
19	SRTS*	SECONDARY REQUEST TO SEND FROM PERIPHERAL
20	DTR*	DATA TERMINAL READY FROM PERIPHERAL
21	n/c	n/c
22	n/c	n/c
23	n/c	n/c
24	n/c	n/c
25	n/c	n/c

CONNECTOR REQUIREMENTS

PERSONALITY BOARD CONNECTORS	MATING CONNECTORS
J1 - ANSLEY 609-1617	ANSLEY 609-1630 (ICM SUPPLIED)
J2 - CANNON DB25P-731	CANNON DB 25S-731 (CUSTOMER SUPPLIED)

SET UP INSTRUCTIONS

Three Jumper Areas are provided: JA, JB and JC. Refer to the figure below for the following set-up instructions:

[JA/JB/JC] area

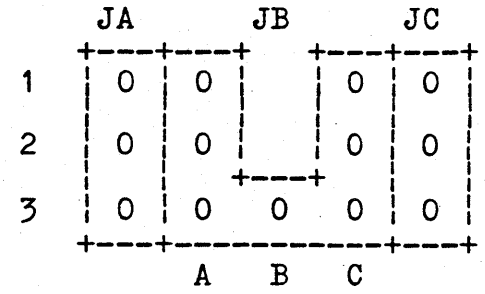

JA

The CPU may be required to provide handshaking with the peripheral through the signal "DCD". If that handshaking signal is required, connect pin 2 to pin 3 with the jumper provided. If no handshaking signal is required , connect pin 2 to pin 1.

JB

The CPU may required to provide handshaking with the peripheral through the signall "CTS". Furthermore, it may accept the signals "DTR" or "SRTS" through the input "CTS". The following options are available:

JB	Configuration
1A-2A	no handshaking provided to peripheral at "CTS"
2A-3A	peripheral's "CTS" activated by CPU's "DTR"
3A-3B	not used
3B-3C	no handshaking provided to CPU's "CTS" by peripheral's "DTR" or "SRTS"
2C-3C	peripheral's "DTR" or "SRTS" activates CPU's "CTS"
1C-2C	peripheral's "DTR" or "SRTS" activates CPU's "DSR"

JC

The peripheral may provide either of two handshaking signals "SRTS" or "DTR". This jumper may select either signal as the source to the CPU's "CTS" or "DSR" inputs.

To connect "DTR" handshaking which is on pin 20 of the RS232/C interface, connect JC-1 to JC-2.

To connect "SRTS" handshaking which is on pin 19 of the RS232/C interface, connect JC-2 to JC-3.

EXAMPLES

1) Configure JA, JB and JC as follows for a simple terminal interface:

JA = 1-2
JB = 1A-2A / 3B-3C
JC = none required

2) Configure JA, JB and JC as follows for an Anadex Serial Printer, model DP-9501

JA = 2-3
JB = 1A-2A / 2C-3C
JC = 2-3

PERSONALITY BOARD - RS232/FULL MODEM

PART NUMBER - **MPB100**

FUNCTION

The RS232C/FULL MODEM PERSONALITY BOARD provides RS232 drivers/receivers and jumper options to interface asynchronous or synchronous modems with varying types of bit oriented protocols such as IBM Bi-Sync, HDLC or SDLC. Jumpers provided enable the user to configure the board for either asynchronous or synchronous operation.

This module may be used with either the CPZ48000 SBCP or the CPS-MX SBSP.

INTERFACE REQUIREMENTS

Connects to J1 or J2 of the CPZ48000 or the CPS-MX.

CPU (J1)

PIN NO.	SIGNAL NAME	DESCRIPTION
1	DSR*	DATA SET READY TO CPU
2	n/c	n/c
3	n/c	n/c
4	TXD	TRANSMIT DATA FROM CPU
5	RXD	RECEIVE DATA TO CPU
6	RTS*	REQUEST-TO-SEND FROM CPU
7	CTS*	CLEAR-TO-SEND TO CPU
8	DCD*	DATA CARRIER DETECT TO CPU
9	DTR*	DATA TERMINAL READY FROM CPU
10	RNG*	RINGING INDICATOR TO CPU
11	n/c	n/c
12	GND	GROUND
13	+16VDC	+16VDC
14	-16VDC	-16VDC
15	+5VDC	+5VDC
16	n/c	n/c

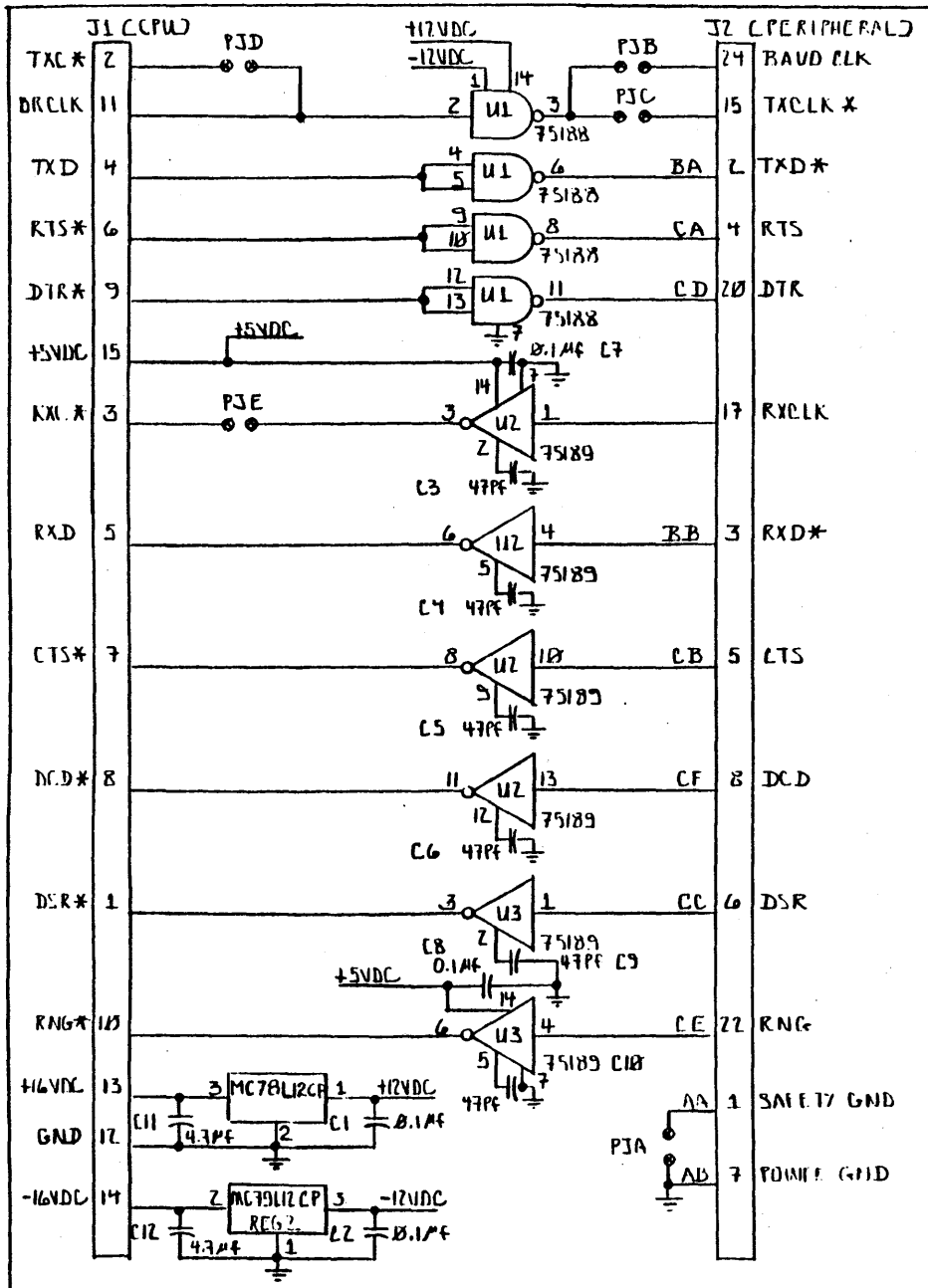

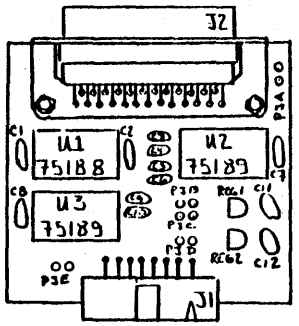

JUMPER OPTIONS

(1) ASYNCHRONOUS MODEM:

PJB, PJC, PJD, PJE ALL OPEN

(2) SYNCHRONOUS MODEM:

PJD & PJE CONNECTED; CUT PJB 1-2 & 2-3 ON CPZ-480000 IF PORT A

CUT PJA ON CPZ-480000 IF PORT B

PJB OR PJC CONNECTED (FUNCTION OF MODEM TYPE)

DESIGNED:	
REV: A	SCHEMATIC / LOGIC DIAGRAM FOR RS232 C FULL MODEM PERSONALITY BOARD
	PART NO. MPB1000
	SHT 1 OF 1

J2(PERIPHERAL)

PIN NO.	SIGNAL NAME	DESCRIPTION
1	SAFETY GND	SAFETY GROUND
2	TXD	TRANSMIT DATA TO PERIPHERAL
3	RXD	RECEIVE DATA FROM PERIPHERAL
4	RTS*	REQUEST-TO-SEND TO PERIPHERAL
5	CTS*	CLEAR-TO-SEND FROM PERIPHERAL
6	DSR*	DATA SET READY FROM PERIPHERAL
7	POWER GND	POWER GROUND
8	DCD*	DATA CARRIER DETECT FROM PERIPHERAL
9	n/c	n/c
10	n/c	n/c
11	n/c	n/c
12	n/c	n/c
13	n/c	n/c
14	n/c	n/c
15	TXCLK*	TRANSMIT CLOCK TO PERIPHERAL
16	n/c	n/c
17	RXCLK*	RECEIVE CLOCK FROM PERIPHERAL
18	n/c	n/c
19	n/c	n/c
20	DTR*	DATA TERMINAL READY TO PERIPHERAL
21	n/c	n/c
22	RNG*	RINGING INDICATOR FROM PERIPHERAL
23	n/c	n/c
24	BAUD CLK	BAUD CLOCK TO PERIPHERAL
25	n/c	n/c

CONNECTOR REQUIREMENTS

PERSONALITY BOARD CONNECTORS	MATING CONNECTORS
J1 - ANSLEY 609-1617	ANSLEY 609-1630 (ICM SUPPLIED)
J2 - CANNON DB25P-731	CANNON DB 25S-731 (CUSTOMER SUPPLIED)

SET UP INSTRUCTIONS

The board may be configured for either asynchronous or synchronous modem requirements.

a) Asynchronous Modems

PJB, PJC, PJD, PJE and PJF are all open.

b) Synchronous Modems

1) MODEM SUPPLIES TRANSMIT AND RECEIVE CLOCK

Connect PJE and PJF only.

2) CPZ48000 OR CPS-MX SUPPLY TRANSMIT CLOCK

Connect PJC, PJD and PJE of MPB100 only.

Note: If using CPZ48000 Port A of the SIO, cut PJB A-B and B-C.

If using CPZ48000 Port B of the SIO, cut PJC.

If using CPS-MX Port A of the SIO, cut PJA A-B and B-C.

If using CPS-MX Port B of the SIO, cut PJB.

3) CPZ48000 OR CPS-MX SUPPLY BAUD RATE CLOCK

Same as (2) above except that on the MPB100, PJB is connected instead of PJC and PJF is disconnected.

c) If safety ground of the modem is to be tied to logic ground. connect PJA on the MPB100.

PERSONALITY BOARD - RS422 SERIAL COMMUNICATIONS

PART NUMBER - FTT100

FUNCTION

The FTT100 personality board provides RS422 differential line drivers and receivers. These balanced drivers and receivers can provide serial communications for distances of up to 4000 feet at a communications rate of 100 kbits/second. This assumes that 24 AWG twisted pair cable is used. Higher rates may be attained for shorter cable lengths. If the CPU's SIO controller is used in synchronous communications mode at its maximum rate of 800 kbits/second, the maximum cable length recommended is 325 feet. Drivers and receivers are provided for all signals of the SIO to support full handshake protocols.

The FTT100 in combination with the Long Distance Serial Personality Board (LDS100), provides a means of connecting terminals, printers and other RS232 serial devices remotely located from the CPU mainframe. CPU-TO-CPU communications may also be set-up over long distances by using the FTT100 at both CPUs. In this case, the interconnecting cable is cross-connected to tie receiver-to-transmiter and tansmiter-to-receiver devices. No cross-connection is required between the FTT100 and the LDS100.

Jumper options are provided to minimize the number of cable lines required if no handshaking signals are required as in the case of simple RS232 Terminals where only transmit and receive signals are required. Ground is also provided but is not used in most cases.

This module may be used with either the CPZ48000 SBCP or the CPS-MX SBSP.

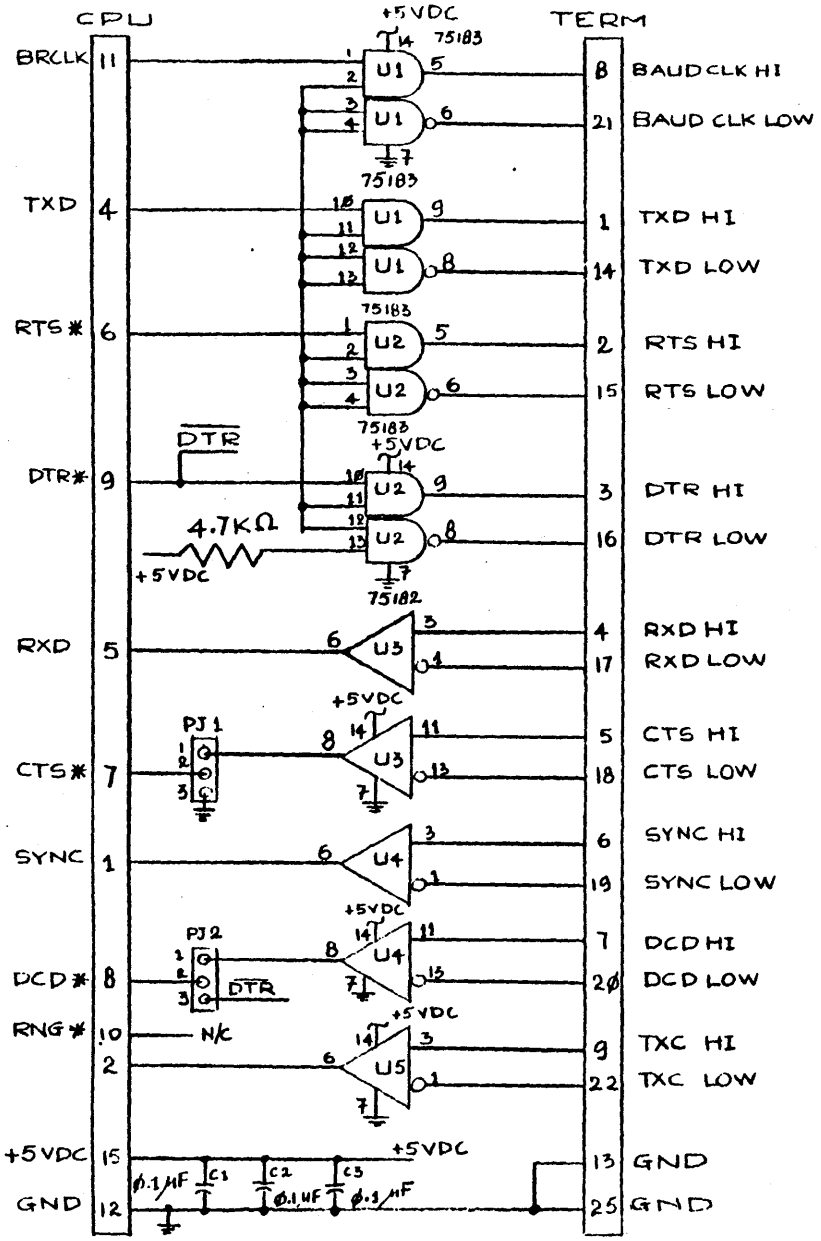

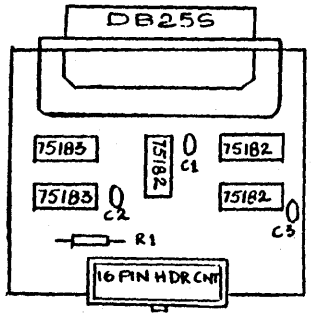

DESIGNED:	
REV: A	SCHEMATIC/LOGIC DIAGRAM FOR RS422 SERIAL COMMUNICATION PERSONALITY BOARD
	PART NO. FTTIØØ-1
	SH1 OF 1

INTERFACE REQUIREMENTS

Connects to J1 or J2 of the CPZ48000 or the CPS-MX.

J1(CPU)

PIN NO.	SIGNAL NAME	DESCRIPTION
1	DSR*	DATA SET READY TO CPU
2	TXC*	TRANSMIT CLOCK FROM CPU
3	n/c	n/c
4	TXD	TRANSMIT DATA FROM CPU
5	RXD	RECEIVE DATA TO CPU
6	RTS*	REQUEST-TO-SEND FROM CPU
7	CTS*	CLEAR-TO-SEND TO CPU
8	DCD*	DATA CARRIER DETECT TO CPU
9	DTR*	DATA TERMINAL READY FROM CPU
10	n/c	n/c
11	BRCLK	BAUD RATE CLOCK FROM CPU
12	GND	GROUND
13	+16VDC	+16VDC
14	-16VDC	-16VDC
15	+5VDC	+5VDC
16	n/c	n/c

J2(TERMINAL)

PIN NO.	SIGNAL NAME	DESCRIPTION
1	TXD HI	TRANSMIT DATA HIGH to terminal
2	RTS HI	REQUEST-TO-SEND HIGH to terminal
3	DTR HI	DATA TERMINAL READY to terminal
4	RXD HI	RECEIVE DATA HIGH from terminal
5	CTS HI	CLEAR-TO-SEND HIGH from terminal
6	SYNC HI	SYNC HIGH from terminal
7	DCD HI	DATA CARRIER DETECT HIGH from terminal
8	BAUDCLK HI	BAUD RATE CLOCK HIGH to terminal
9	TXC HI	TRANSMIT CLOCK HIGH from terminal
10	n/c	n/c
11	n/c	n/c
12	n/c	n/c
13	GND	GROUND
14	TXD LO	TRANSMIT DATA LOW to terminal
15	RTS LO	REQUEST-TO-SEND LOW to terminal
16	DTR LO	DATA TERMINAL READY LOW to terminal
17	RXD LO	RECEIVE DATA LOW from terminal
18	CTS LO	CLEAR-TO-SEND LOW from terminal
19	SYNC LO	SYNC LOW from terminal
20	DCD LO	DATA CARRIER DETECT LOW from terminal
21	BAUDCLK LO	BAUD RATE CLOCK LOW to terminal
22	TXC LO	TRANSMIT CLOCK LOW from terminal
23	n/c	n/c
24	n/c	n/c
25	GND	GROUND

CONNECTOR REQUIREMENTS

PERSONALITY BOARD CONNECTORS	MATING CONNECTORS
J1 - ANSLEY 609-1617	ANSLEY 609-1630 (ICM SUPPLIED)
J2 - CANNON DB25P-731	CANNON DB 25S-731 (CUSTOMER SUPPLIED)

SET UP INSTRUCTIONS

SIMPLE TERMINAL

To provide less interconnecting lines for terminal not requiring full handshake protocol, jumper PJ1 2-to-3 and PJ2 2-to-3. Provide twisted pair lines for TXD and RXD only.

FULL PROTOCOL

To provide for full handshaking, jumper PJ1 1-to-2 and PJ2 1-to-2. Provide twisted pair lines for the signals required.

SYNCHRONOUS TERMINAL

To use CPZ48000 Port A of the SIO, cut PJB B-C on the CPZ48000.

To use CPS-MX Port A of the SIO, cut PJA B-C on the CPS-MX.

PERSONALITY BOARD - LONG DISTANCE SERIAL COMMUNICATIONS

PART NUMBER - LDS100

FUNCTION

The LDS100 personality board provides RS422 differential line drivers and receivers. These balanced drivers and receivers can provide serial communications for distances of up to 4000 feet at a communications rate of 100 kbits/second. This assumes that 24 AWG twisted pair cable is used. Drivers and receivers are provided to support full handshake protocols.

The LDS100 in combination with the RS422 Serial Communications Personality Board (FTT100), provides a means of connecting terminals, printers and other RS232 serial devices remotely located from the CPU mainframe. Jumper options are provided to minimize the number of cable lines required if no handshaking signals are required as in the case of simple RS232 Terminals where only transmit and receive signals are required. Ground is also provided but is not used in most cases.

AC power must be provided to the board. The board may be strapped for either 115VAC/60HZ or 230 VAC/50HZ operation.

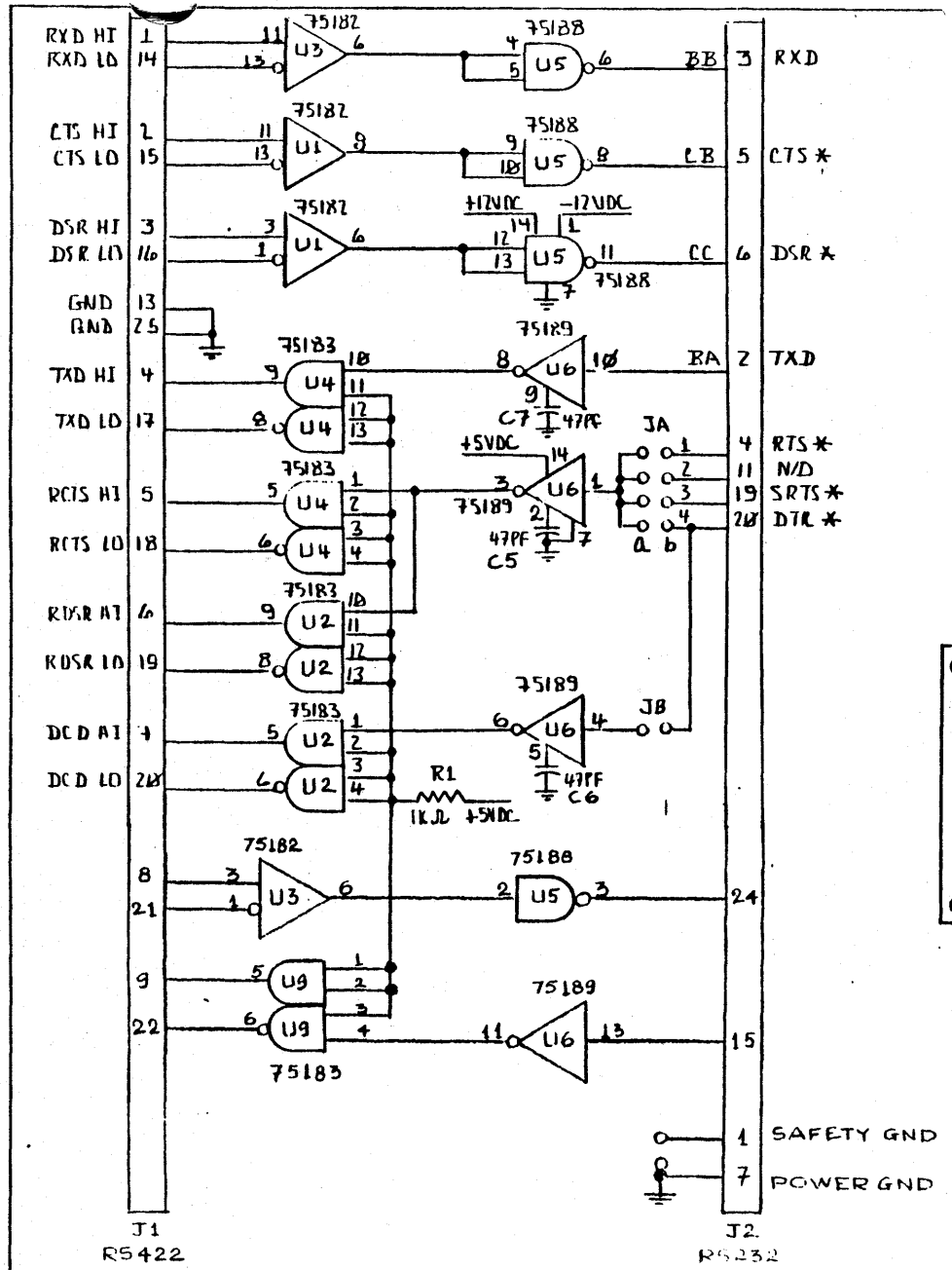

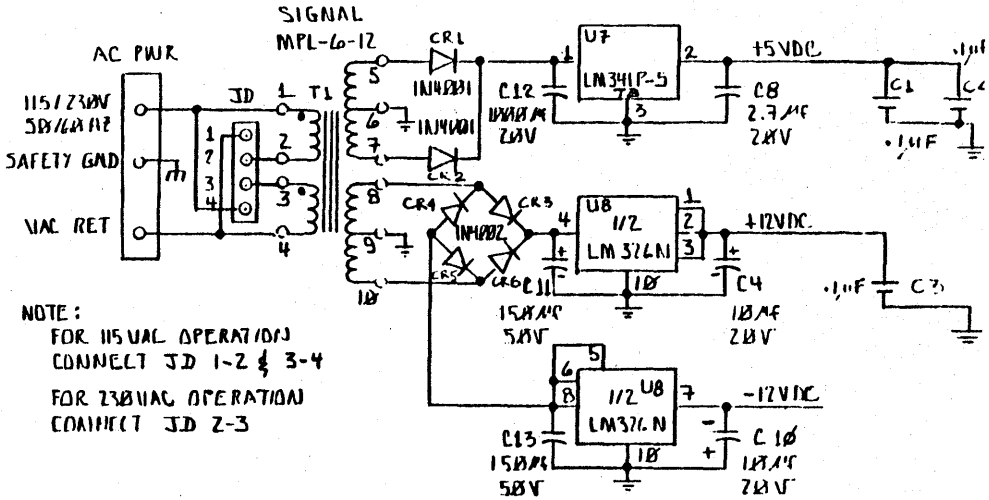

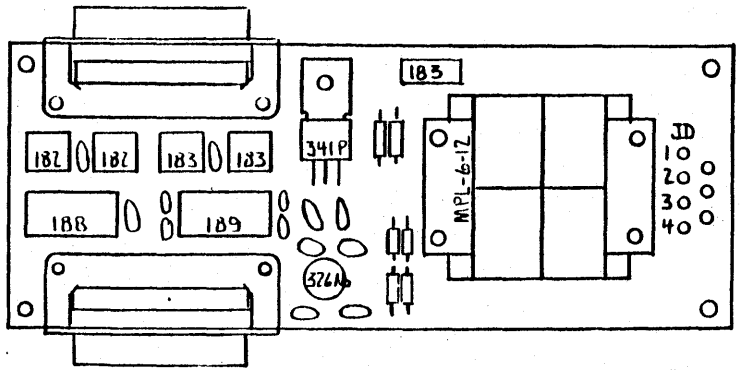

DESIGNED:	SCHEMATIC/LOGIC DIAGRAM FOR LONG DISTANCE SERIAL LINK PERSONALITY BOARD
REV: A	PART NO. LDS100
	SHT 01 1

INTERFACE REQUIREMENTS

J1 connects to RS422 Personality Board via long distance cable.
J2 connects to RS232 serial device with standard RS232 cable.

J1(RS422 INTERFACE)

PIN NO.	SIGNAL NAME	DESCRIPTION
1	TXD HI	TRANSMIT DATA HIGH to terminal
2	RTS HI	REQUEST-TO-SEND HIGH to terminal
3	DTR HI	DATA TERMINAL READY to terminal
4	RXD HI	RECEIVE DATA HIGH from terminal
5	CTS HI	CLEAR-TO-SEND HIGH from terminal
6	SYNC HI	SYNC HIGH from terminal
7	DCD HI	DATA CARRIER DETECT HIGH from terminal
8	BAUDCLK HI	BAUD RATE CLOCK HIGH to terminal
9	TXC HI	TRANSMIT CLOCK HIGH from terminal
10	n/c	n/c
11	n/c	n/c
12	n/c	n/c
13	GND	GROUND
14	TXD LO	TRANSMIT DATA LOW to terminal
15	RTS LO	REQUEST-TO-SEND LOW to terminal
16	DTR LO	DATA TERMINAL READY LOW to terminal
17	RXD LO	RECEIVE DATA LOW from terminal
18	CTS LO	CLEAR-TO-SEND LOW from terminal
19	SYNC LO	SYNC LOW from terminal
20	DCD LO	DATA CARRIER DETECT LOW from terminal
21	BAUDCLK LO	BAUD RATE CLOCK LOW to terminal
22	TXC LO	TRANSMIT CLOCK LOW from terminal
23	n/c	n/c
24	n/c	n/c
25	GND	GROUND

J2(PERIPHERAL)

PIN NO.	SIGNAL NAME	DESCRIPTION
1	SAFETY GND	SAFETY GROUND
2	TXD	TRANSMIT DATA TO PERIPHERAL
3	RXD	RECEIVE DATA FROM PERIPHERAL
4	RTS*	REQUEST-TO-SEND TO PERIPHERAL
5	CTS*	CLEAR-TO-SEND FROM PERIPHERAL
6	DSR*	DATA SET READY FROM PERIPHERAL
7	POWER GND	POWER GROUND
8	n/c	n/c
9	n/c	n/c
10	n/c	n/c
11	RESERVED	RESERVED FOR SPECIAL USE HANDSHAKE
12	n/c	n/c
13	n/c	n/c
14	n/c	n/c
15	TXCLK*	TRANSMIT CLOCK FROM PERIPHERAL
16	n/c	n/c
17	n/c	n/c
18	n/c	n/c
19	SRTS*	SECONDARY REQUEST-TO-SEND FROM PERIPHERAL
20	DTR*	DATA TERMINAL READY TO PERIPHERAL
21	n/c	n/c
22	n/c	n/c
23	n/c	n/c
24	BAUDCLK	BAUD CLOCK TO PERIPHERAL
25	n/c	n/c

CONNECTOR REQUIREMENTS

PERSONALITY BOARD CONNECTORS	MATING CONNECTORS
J1 - CANNON DB25S-731	CANNON DB25P-731 (CUSTOMER SUPPLIED)
J2 - CANNON DB25S-731	CANNON DB25P-731 (CUSTOMER SUPPLIED)

SET UP INSTRUCTIONS

(1)AC POWER SET-UP

The LDS100 may be configured to operate with 115VAC/60HZ or 230VAC/50HZ through jumper options. Use 18 or 16 AWG wire for jumpers in this setting.

To configure the LDS100 for 115VAC, solder two jumpers. One is soldered at JD 1-to-2 and the other is soldered at JD 3-to-4.

To configure the LDS100 for 230VAC, solder one jumper at JD 2-to-3.

AC power may now be installed. Connect AC HI and AC LO in the indicated solder pads. Connect SAFETY GROUND to the pad marked "CH".

(2)SAFETY GROUND CONNECTION

Solder a strap in jumper area JC if Safety Ground should be connected to Power Ground.

(3)SIMPLE TERMINAL(NO HANDSHAKING) SET-UP

Most terminals do not require handshaking for RS232/C communication. In this case, no jumpers are required in jumper areas JA and JB. Connect receive and transmit data lines only between the FTT100 and the LDS100 boards.

(4)TERMINAL/PRINTER(FULL HANDSHAKING)

Connect JA in accordance with the type of handshaking signal required to be transmited to the CLEAR-TO-SEND input of the CPU. The options are as follows:

JA	handshake signal
a1-to-b1	request-to-send(RTS)
a2-to-b2	manufacture defined
a3-to-b3	secondary request-to-send(SRTS)
a4-to-b4	data terminal ready(DTR)

Connect JB if DATA TERMINAL READY(DTR) is required to be connected to the DATA CARRIER DETECT(DCD) signal of the CPU. Connect all corresponding signal lines from FTT100 to the LDS100.

PERSONALITY BOARD - FLOPPY DISK CONTROLLER

PART NUMBER - FPB100-XY

FUNCTION

The FLOPPY DISK CONTROLLER personality board provides line drivers and receivers, terminators, logic and a jumper option to interface either an 8-inch or a 5 1/4-inch floppy disk drive with the CPZ48000 SBCP. A DB25 connector is available as the means to interface with the drive interface; however, if other types of commonly used connectors are required, adapters are available to tailor the interface appropriately.

This module is used only on the CPZ48000 SBCP.

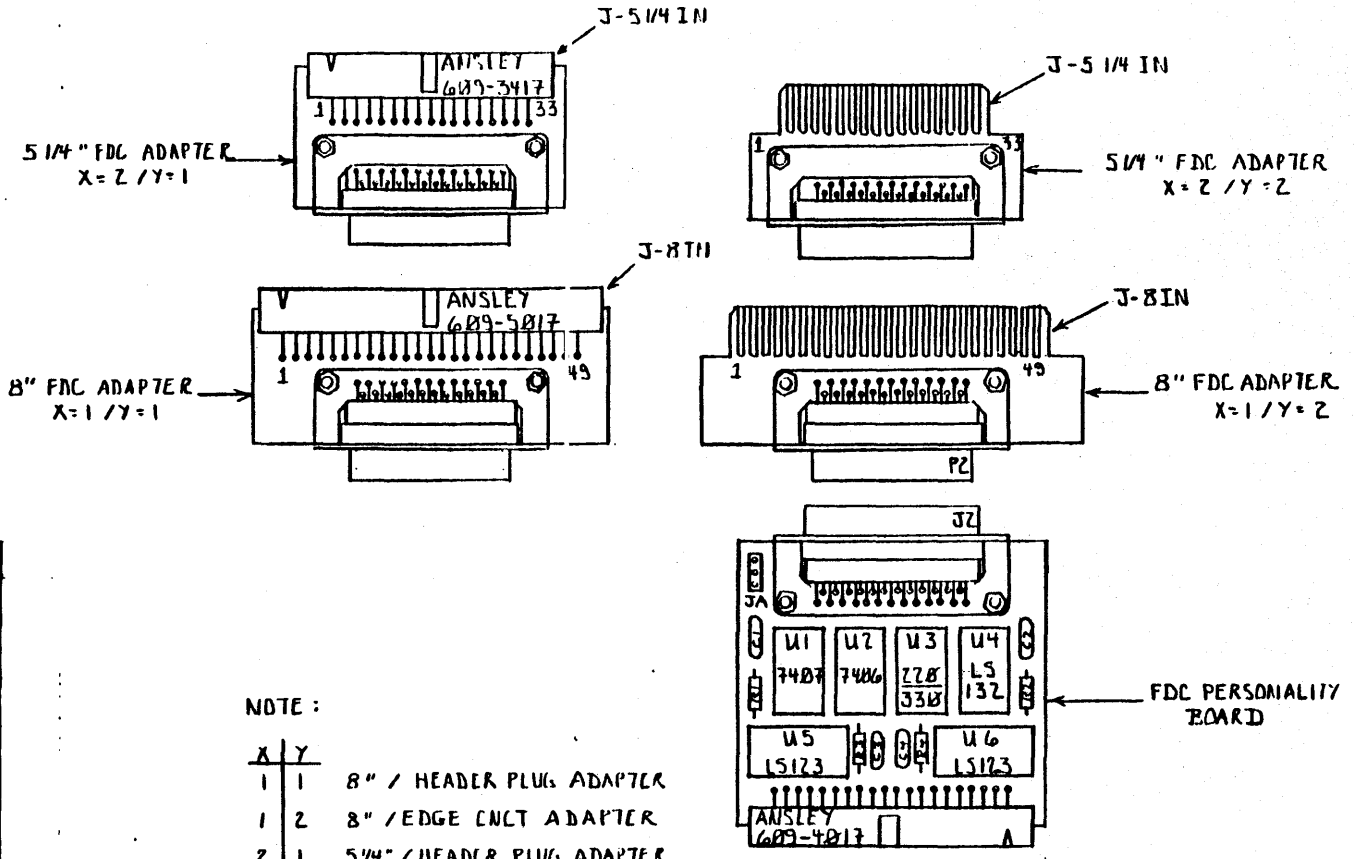

FUNCTION	J2	J-8IN	J-5¼IN
DS1 *	1	26	10
DS2 *	2	28	12
DS3 *	3	30	14
DS4 *	4	32	6
DIRC *	5	34	18
STEP *	6	36	20
WRITE DATA *	7	38	22
WRITE GATE *	8	40	24
TRACK0 *	9	42	26
WRITE PROT *	10	44	28
READ DATA *	11	46	30
SSO *	12	14	32
HEAD LOAD *	13	18	—
INDEX *	14	20	8
READY *	15	22	—
MOTOR ON *	16	24	16
TK43 *	17	2	—
GND	18	—	—
GND	19	—	—
GND	20	—	—
GND	21	—	—
GND	22	—	—
GND	23	—	—
GND	24	—	—
GND	25	—	—

ALL ODD PINS GND;
EVEN PINS NOT LISTED
ARE OPEN

NOTE :

X	Y	
1	1	8" / HEADER PLUG ADAPTER
1	2	8" / EDGE CNCT ADAPTER
2	1	5¼" / HEADER PLUG ADAPTER
2	2	5¼" / EDGE CNCT ADAPTER

DESIGNED:	
REV: A	SCHEMATIC/LOGIC DIAGRAM FOR FLOPPY DISK CONTROLLER PERSONALITY BOARD/8"-5¼" ADAPTER
	PART NO. FPB 1000-XY
	SH 1 OF 2

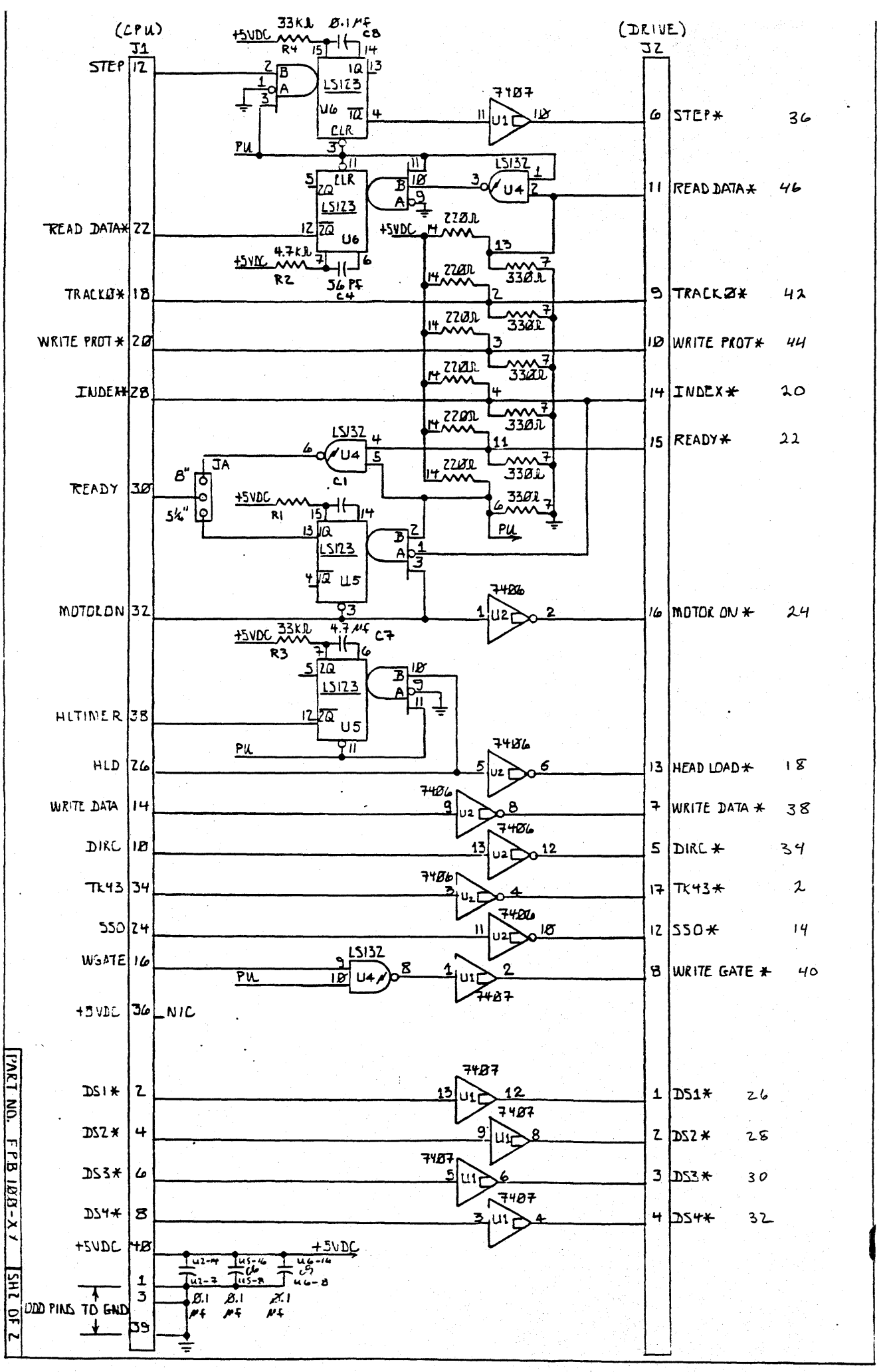
(CPU)
J1
(DRIVE)
J2
STEP 12
READ DATA* 22
TRACK0* 18
WRITE PROT* 20
INDEX* 28
READY 30
MOTOR ON 32
HLTIMER 38
HLD 26
WRITE DATA 14
DIRC 10
TK43 34
SSO 24
WGATE 16
+5VDC 36 NIC
DS1* 2
DS2* 4
DS3* 6
DS4* 8
+5VDC 40
ODD PINS TO GND
6 STEP* 36
11 READ DATA* 46
9 TRACK0* 42
10 WRITE PROT* 44
14 INDEX* 20
15 READY* 22
16 MOTOR ON* 24
13 HEAD LOAD* 18
7 WRITE DATA* 38
5 DIRC* 34
17 TK43* 2
12 SSO* 14
8 WRITE GATE* 40
1 DS1* 26
2 DS2* 28
3 DS3* 30
4 DS4* 32
+5VDC
33KΩ
0.1μF
C8
R4
LS123
U6
CLR
PU
7407
U1
LS132
U4
220Ω
330Ω
4.7KΩ
R2
56PF
C4
JA
8"
5¼"
C1
R1
U5
7406
U2
33KΩ
4.7μF
C7
R3
U5
U2-14
U2-7
U5-16
U5-8
U6-16
U6-8
C6
C9
0.1 μF
PART NO. FPB 100-X1
SH2 OF 2

INTERFACE REQUIREMENTS

Connects to J1 of the CPZ48000.

J1(CPU)

PIN NO.	SIGNAL NAME	DESCRIPTION
1	GND	GROUND
2	DS1*	DRIVE SELECT #1 FROM CPU
3	GND	GROUND
4	DS2*	DRIVE SELECT #2 FROM CPU
5	GND	GROUND
6	DS3*	DRIVE SELECT #3 FROM CPU
7	GND	GROUND
8	DS4*	DRIVE SELECT #4 FROM CPU
9	GND	GROUND
10	DIRC	DIRECTION CONTROL FROM CPU
11	GND	GROUND
12	STEP	STEP CONTROL FROM CPU
13	GND	GROUND
14	WRITE DATA	WRITE DATA FROM CPU
15	GND	GROUND
16	WGATE	WRITE GATE FROM CPU
17	GND	GROUND
18	TRACK 0*	TRACK 0 STATUS TO CPU
19	GND	GROUND
20	WRITE PROT*	WRITE PROTECT TO CPU
21	GND	GROUND
22	READ DATA*	READ DATA TO CPU
23	GND	GROUND
24	SSO	SIDE SELECT OUTPUT FROM CPU
25	GND	GROUND
26	HLD	HEAD LOAD COMMAND FROM CPU
27	GND	GROUND
28	INDEX*	INDEX PULSE TO CPU
29	GND	GROUND
30	READY	READY STATUS TO CPU
31	GND	GROUND
32	MOTOR ON	MOTOR ON STATUS FROM CPU
33	GND	GROUND
34	TK43	TRACK 43 STATUS FROM CPU
35	GND	GROUND
36	+16VDC	+16VDC
37	GND	GROUND
38	n/c	n/c
39	GND	GROUND
40	+5VDC	+5VDC

J2(MODIFIED DRIVE INTERFACE)

PIN NO.	SIGNAL NAME	DESCRIPTION
1	DS1*	DRIVE SELECT #1 to DRIVE interface
2	DS2*	DRIVE SELECT #2 to DRIVE interface
3	DS3*	DRIVE SELECT #3 to DRIVE interface
4	DS4*	DRIVE SELECT #4 to DRIVE interface
5	DIRC*	DIRECTION CONTROL to DRIVE interface
6	STEP*	STEP CONTROL to DRIVE interface
7	WRITE DATA*	WRITE DATA to DRIVE interface
8	WRITE GATE*	WRITE GATE to DRIVE interface
9	TRACK 0 *	TRACK 0 STATUS from DRIVE interface
10	WRITE PROT*	WRITE PROTECT STATUS from DRIVE interface
11	READ DATA*	READ DATA to DRIVE inerface
12	SS0*	SIDE SELECT OUTPUT to DRIVE interface
13	HEAD LOAD*	HEAD LOAD COMMAND to DRIVE interface
14	INDEX*	INDEX PULSES from DRIVE interface
15	READY	READY STATUS from DRIVE interface
16	MOTOR ON*	MOTOR ON COMMAND to DRIVE interface
17	TK43*	TRACK 43 STATUS to DRIVE interface
18	GND	GROUND
19	GND	GROUND
20	GND	GROUND
21	GND	GROUND
22	GND	GROUND
23	GND	GROUND
24	GND	GROUND
25	GND	GROUND

ADAPTER FPB100-11

Connects to FPB100 Personality Board.

J1(MODIFIED DRIVE INTERFACE)

PIN NO.	SIGNAL NAME	DESCRIPTION
1	DS1*	DRIVE SELECT #1 to DRIVE interface
2	DS2*	DRIVE SELECT #2 to DRIVE interface
3	DS3*	DRIVE SELECT #3 to DRIVE interface
4	DS4*	DRIVE SELECT #4 to DRIVE interface
5	DIRC*	DIRECTION CONTROL to DRIVE interface
6	STEP*	STEP CONTROL to DRIVE interface
7	WRITE DATA*	WRITE DATA to DRIVE interface
8	WRITE GATE*	WRITE GATE to DRIVE interface
9	TRACK 0 *	TRACK 0 STATUS from DRIVE interface
10	WRITE PROT*	WRITE PROTECT STATUS from DRIVE interface
11	READ DATA*	READ DATA to DRIVE inerface
12	SS0*	SIDE SELECT OUTPUT to DRIVE interface
13	HEAD LOAD*	HEAD LOAD COMMAND to DRIVE interface
14	INDEX*	INDEX PULSES from DRIVE interface
15	READY	READY STATUS from DRIVE interface
16	MOTOR ON*	MOTOR ON COMMAND to DRIVE interface
17	TK43*	TRACK 43 STATUS to DRIVE interface
18	GND	GROUND
19	GND	GROUND
20	GND	GROUND
21	GND	GROUND
22	GND	GROUND
23	GND	GROUND
24	GND	GROUND
25	GND	GROUND

ADAPTER FPB100-11

J2(8-INCH DRIVE INTERFACE)

PIN NO.	SIGNAL NAME	DESCRIPTION
1	GND	GROUND
2	TK43*	TRACK 43 STATUS to DRIVE interface
3	GND	GROUND
4	n/c	n/c
5	GND	GROUND
6	n/c	n/c
7	GND	GND
8	n/c	n/c
9	GND	GROUND
10	n/c	n/c
11	GND	GROUND
12	n/c	n/c
13	GND	GROUND
14	SSO	SIDE SELECT OUTPUT to DRIVE interface
15	GND	GROUND
16	n/c	n/c
17	GND	GROUND
18	HEAD LOAD*	HEAD LOAD COMMAND to DRIVE interface
19	GND	GROUND
20	INDEX*	INDEX PULSES from DRIVE interface
21	GND	GROUND
22	READY*	READY STATUS from DRIVE interface
23	GND	GROUND
24	MOTOR ON*	MOTOR ON COMMAND to DRIVE interface
25	GND	GROUND
26	DS1*	DRIVE SELECT #1 to DRIVE interface
27	GND	GROUND
28	DS2*	DRIVE SELECT #2 to DRIVE interface
29	GND	GROUND
30	DS3*	DRIVE SELECT #3 to DRIVE interface
31	GND	GROUND
32	DS4*	DRIVE SELECT #4 to DRIVE interface
33	GND	GROUND
34	DIRC*	DIRECTION CONTROL to DRIVE interface
35	GND	GROUND
36	STEP*	STEP COMMAND to DRIVE interface
37	GND	GROUND
38	WRITE DATA*	WRITE DATA to DRIVE interface
39	GND	GROUND
40	WRITE GATE*	WRITE GATE to DRIVE interface

41	GND	GROUND
42	TRACK 0 *	TRACK ZERO STATUS from DRIVE interface
43	GND	GROUND
44	WRITE PROT*	WRITE PROTECT STATUS from DRIVE interface
45	GND	GROUND
46	READ DATA*	READ DATA to DRIVE interface
47	GND	GROUND
48	n/c	n/c
49	GND	GROUND
50	n/c	n/c

ADAPTER FPB100-22

Connects to FPB100 Personality Board.

J1(MODIFIED DRIVE INTERFACE)

PIN NO.	SIGNAL NAME	DESCRIPTION
1	DS1*	DRIVE SELECT #1 to DRIVE interface
2	DS2*	DRIVE SELECT #2 to DRIVE interface
3	DS3*	DRIVE SELECT #3 to DRIVE interface
4	DS4*	DRIVE SELECT #4 to DRIVE interface
5	DIRC*	DIRECTION CONTROL to DRIVE interface
6	STEP*	STEP CONTROL to DRIVE interface
7	WRITE DATA*	WRITE DATA to DRIVE interface
8	WRITE GATE*	WRITE GATE to DRIVE interface
9	TRACK 0 *	TRACK 0 STATUS from DRIVE interface
10	WRITE PROT*	WRITE PROTECT STATUS from DRIVE interface
11	READ DATA*	READ DATA to DRIVE inerface
12	SSO*	SIDE SELECT OUTPUT to DRIVE interface
13	HEAD LOAD*	HEAD LOAD COMMAND to DRIVE interface
14	INDEX*	INDEX PULSES from DRIVE interface
15	READY	READY STATUS from DRIVE interface
16	MOTOR ON*	MOTOR ON COMMAND to DRIVE interface
17	TK43*	TRACK 43 STATUS to DRIVE interface
18	GND	GROUND
19	GND	GROUND
20	GND	GROUND
21	GND	GROUND
22	GND	GROUND
23	GND	GROUND
24	GND	GROUND
25	GND	GROUND

ADAPTER FPB100-22

J2(5 1/4-INCH DRIVE INTERFACE)

PIN NO.	SIGNAL NAME	DESCRIPTION
1	GND	GROUND
2	n/c	n/c
3	GND	GROUND
4	n/c	n/c
5	GND	GROUND
6	DS4*	DRIVE SELECT #4 to DRIVE interface
7	GND	GROUND
8	INDEX*	INDEX* PULSE STATUS from DRIVE interface
9	GND	GROUND
10	DS1*	DRIVE SELECT #1 to DRIVE interface
11	GND	GROUND
12	DS2*	DRIVE SELECT #2 to DRIVE interface
13	GND	GROUND
14	DS3*	DRIVE SELECT #3 to DRIVE interface
15	GND	GROUND
16	MOTOR ON*	MOTOR ON COMMAND to DRIVE interface
17	GND	GROUND
18	DIRC*	DIRECTION CONTROL to DRIVE interface
19	GND	GROUND
20	STEP*	STEP COMMAND to DRIVE interface
21	GND	GROUND
22	WRITE DATA*	WRITE DATA to DRIVE interface
23	GND	GROUND
24	WRITE GATE*	WRITE GATE to DRIVE interface
25	GND	GROUND
26	TRACK 0 *	TRACK ZERO STATUS from DRIVE interface
27	GND	GROUND
28	WRITE PROT*	WRITE PROTECT STATUS from DRIVE interface
29	GND	GROUND
30	READ DATA*	READ DATA to DRIVE interface
31	GND	GROUND
32	SSO*	SIDE SELECT OUTPUT to DRIVE interface
33	GND	GROUND
34	n/c	n/c

CONNECTOR REQUIREMENTS

Use the following table to determine the type of mating connector to use:

CONFIGURATION	PART NUMBER	CONNECTOR TYPE
8-INCH OR 5 1/4-INCH W/O ADAPTER	FPB100	CANNON DB23S-731
8-INCH/HEADER PLUG ADAPTER	FPB100-11	ANSLEY 609-5017
8-INCH/EDGE CONNECTOR ADAPTER	FPB100-12	AMP 840-225F-A50-1
5 1/4-INCH/HEADER PLUG ADAPTER	FPB100-21	ANSLEY 609-3417
5 1/4-INCH/EDGE CONNECTOR ADAPTER	FPB100-22	AMP 840-225F-A34-1

FPB100	MATING CONNECTORS
J1 - ANSLEY 609-4017	ANSLEY 609-4030 (ICM SUPPLIED)
J2 - CANNON DB25S-731	CANNON DB25P-731 (*see note below)

FPB100-11	MATING CONNECTORS
J1 - CANNON DB25P-731	CANNON DB25S-731 (ICM SUPPLIED)
J2 - ANSLEY 609-5017	ANSLEY 609-5030 (CUSTOMER SUPPLIED)

FPB100-12	MATING CONNECTORS
J1 - CANNON DB25P-731	CANNON DB25S-731 (ICM SUPPLIED)
J2 - (50 PIN EDGE)	AMP 840-225F-A50-1(CUSTOMER SUPPLIED)

FPB100-21	MATING CONNECTORS
J1 - CANNON DB25P-731	CANNON DB25S-731 (ICM SUPPLIED)
J2 - ANSLEY 609-3417	ANSLEY 609-3430 (CUSTOMER SUPPLIED)

FPB100-22	MATING CONNECTORS
J1 - CANNON DB25P-731	CANNON DB25S-731 (ICM SUPPLIED)
J2 - (34 PIN EDGE)	AMP 840-225F-A34-1(CUSTOMER SUPPLIED)

* Customer supplied if connecting directly to FPB100. ICM supplied if using FPB100-XY Adapters.

SET UP INSTRUCTIONS

Jumper PJA is provided to configure the base personality board for either 8-inch or 5 1/4-inch operation. The jumper selects the "READY" signal from the 8-inch drive interface or a signal generated on the basis of index pulse occurrances for the 5 1/4-inch drive operation. Install a jumper from pin 2 to 3 for 8-inch operation. Install a jumper from pin 1 to 2 for 5 1/4-inch operation.

[PJA] area

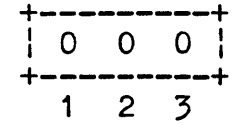

PERSONALITY BOARD - CENTRONICS PRINTER

PART NUMBER - CPI100

FUNCTION

The Centronics Printer Personality Board provides line drivers, receivers, terminators, jumper options and data strobe generator logic to interface to any printer compatible with the Centronics parallel interface.

This module may be used with either the CPZ48000 SBCP or the CPS-MX SBSP.

INTERFACE REQUIREMENTS

Connects to J4 of CPZ48000 SBCP or CPS-MX SBSP.

J1(CPU)

PIN NO.	SIGNAL NAME	DESCRIPTION
1	RDYA	READY handshake from CPU, Channel A
2	STBA	STROBE handshake to CPU, Channel A
3	n/c	n/c
4	n/c	n/c
5	D0A	DATA BIT 0, Channel A
6	D1A	DATA BIT 1, Channel A
7	D2A	DATA BIT 2, Channel A
8	D3A	DATA BIT 3, Channel A
9	D4A	DATA BIT 4, Channel A
10	D5A	DATA BIT 5, Channel A
11	D6A	DATA BIT 6, Channel A
12	D7A	DATA BIT 7, Channel A
13	D0B	DATA BIT 0, Channel B
14	D1B	DATA BIT 1, Channel B
15	D2B	DATA BIT 2, Channel B
16	D3B	DATA BIT 3, Channel B
17	D4B	DATA BIT 4, Channel B
18	D5B	DATA BIT 5, Channel B
19	D6B	DATA BIT 6, Channel B
20	D7B	DATA BIT 7, Channel B
21	RESET*	RESET from CPU (active low)
22	GND	GROUND
23	n/c	n/c
24	GND	GROUND
25	PCLK	4 MHZ Auxilliary Clock from CPU
26	+5VDC	+5VDC

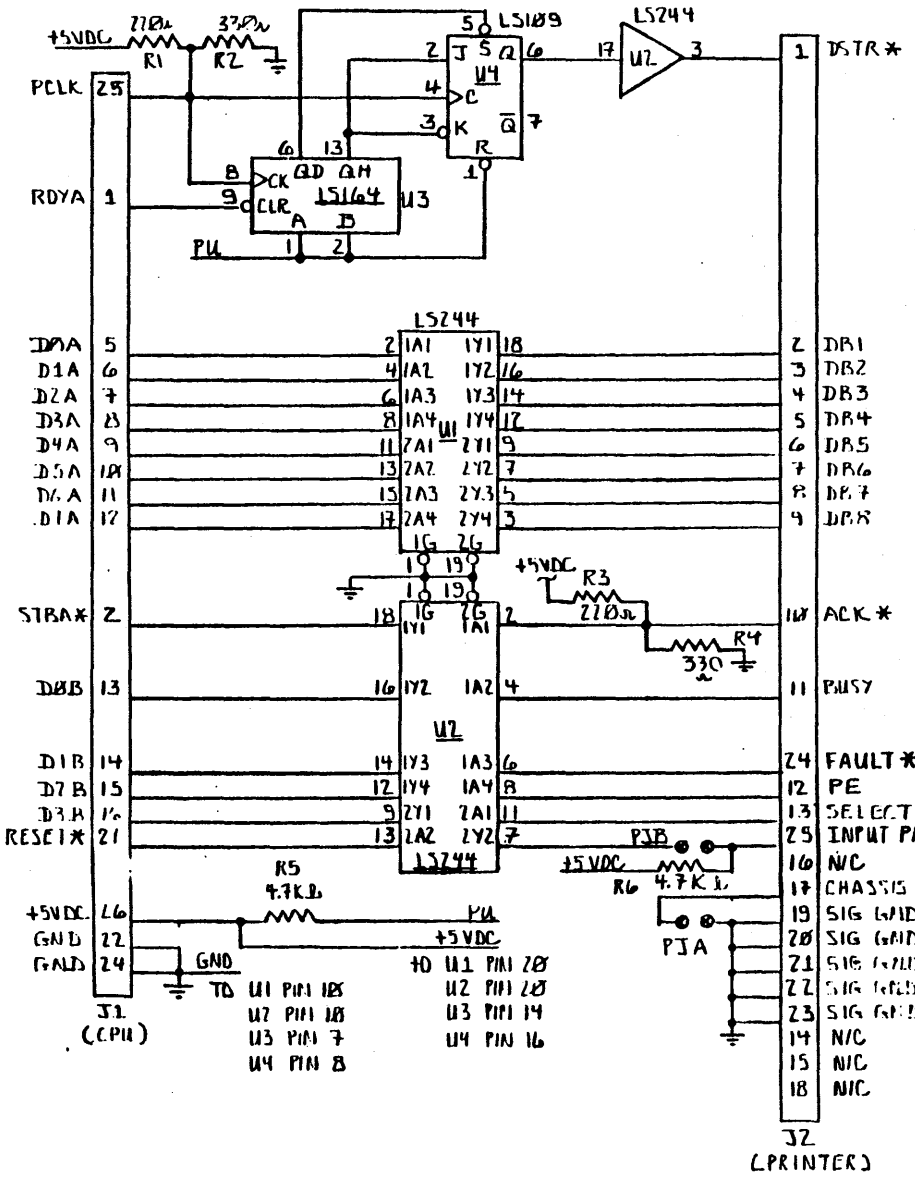

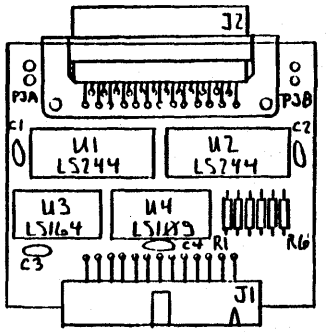

NOTE: C1 - C4 = DECOUPLING CAPS 0.1 μf

DESIGNED:	
REV: -	SCHEMATIC/LOGIC DIAGRAM FOR CENTRONICS PRINTER PARALLEL INTERFACE PERSONALITY BOARD
	PART NO. CPI 100
	SHT 1 OF 2

CENTRONICS		P1
1	DATA STROBE	1 DSTR *
2	DATA 1	2 DB1
3	DATA 2	3 DB2
4	DATA 3	4 DB3
5	DATA 4	5 DB4
6	DATA 5	6 DB5
7	DATA 6	7 DB6
8	DATA 7	8 DB7
9	DATA 8	9 DB8
10	ACKNLG*	10 ACK*
11	BUSY	11 BUSY
12	PE	12 PE
13	SLCT	13 SELECT
14	+/- 5V	NIC
15	CSCX	NIC
16	+/- 5V OR EMPTY	16 EMPTY *
17	CHASSIS GND	17 CHASSIS GND
18	+5V	NIC
19	GND	19 GND
20	GND	20 GND
21	GND	21 GND
22	GND	22 GND
23	GND	23 GND
24	GND	GND
25	GND	GND
26	GND	GND
27	GND	GND
28	GND	GND
29	GND	GND
30	GND	GND
31	INPUT PRIME *	25 INPUT PRIME *
32	FAULT *	24 FAULT
33	N/C	NIC

CENTRONICS		P1
34	LINE COUNT PULSE	NIC
35	GND	GND
36	N/C	NIC

CONNECTION TABLE

CPI UNIT	SH 2 OF 2

J2(PRINTER)

PIN NO.	SIGNAL NAME	DESCRIPTION
1	DSTR*	DATA STROBE to the Printer
2	DB1	DATA BIT 1 to the Printer
3	DB2	DATA BIT 2 to the Printer
4	DB3	DATA BIT 3 to the Printer
5	DB4	DATA BIT 4 to the Printer
6	DB5	DATA BIT 5 to the Printer
7	DB6	DATA BIT 6 to the Printer
8	DB7	DATA BIT 7 to the Printer
9	DB8	DATA BIT 8 to the Printer
10	ACK*	ACKNOWLEDGE from the Printer
11	BUSY	BUSY Status from the Printer
12	PE	PAPER EMPTY Status from the Printer
13	SELECT	SELECT Status from the Printer
14	n/c	n/c
15	n/c	n/c
16	n/c	n/c
17	CHASSIS GND	Printer Chassis Ground
18	n/c	n/c
19	SIG GND	SIGNAL GROUND
20	SIG GND	SIGNAL GROUND
21	SIG GND	SIGNAL GROUND
23	SIG GND	SIGNAL GROUND
24	FAULT*	FAULT Status from the Printer
25	INPUT PRIME*	RESET to the Printer

J2(PRINTER)

PIN NO.	SIGNAL NAME	DESCRIPTION
1	DSTR*	DATA STROBE to the Printer
2	DB1	DATA BIT 1 to the Printer
3	DB2	DATA BIT 2 to the Printer
4	DB3	DATA BIT 3 to the Printer
5	DB4	DATA BIT 4 to the Printer
6	DB5	DATA BIT 5 to the Printer
7	DB6	DATA BIT 6 to the Printer
8	DB7	DATA BIT 7 to the Printer
9	DB8	DATA BIT 8 to the Printer
10	ACK*	ACKNOWLEDGE from the Printer
11	BUSY	BUSY Status from the Printer
12	PE	PAPER EMPTY Status from the Printer
13	SELECT	SELECT Status from the Printer
14	n/c	n/c
15	n/c	n/c
16	n/c	n/c
17	CHASSIS GND	Printer Chassis Ground
18	n/c	n/c
19	SIG GND	SIGNAL GROUND
20	SIG GND	SIGNAL GROUND
21	SIG GND	SIGNAL GROUND
23	SIG GND	SIGNAL GROUND
24	FAULT*	FAULT Status from the Printer
25	INPUT PRIME*	RESET to the Printer

PERSONALITY BOARD - PRIAM INTELLIGENT HARD DISK

PART NUMBER - PRI100

FUNCTION

PRIAM provides two intelligent hard disk interface controllers referred to as the "SMART" and the "SMART-E". These are preprogrammed microprocessor based controllers. They may be used for the entire line of PRIAM Winchester disc drives which range in capacity from 10 megabytes to 157 megabytes and come in eight or fourteen inch packaging. Up to four drives in any combination of drive sizes may be interconnected. The controllers support a variety of read sector, write sector and format commands. Data transfers may be either programmed I/O or DMA. The SMART-E has all the features that the SMART has in addition to error detection & correction, logical sector addressing, sector interleaving, parity generation & testing, direct data transfers and a 2 Kbyte data buffer (SMART has a 1 Kbyte buffer). The interface performs the entire function of detailed disc control while presenting to the host a basic and cost effective interface.

The PRI100 Personality Board connects the parallel port of the CPZ48000 SBCP or the CPS-MX SBSP to the SMART or SMART-E controllers. Thus, a very powerful disc subsystem may be directly connected to the ICM line of processors via the PRI100.

A jumper option is provided on the PRI100 to configure it for either the SMART or the SMART-E controller. The controllers mount along the drive sides alleviating the need for additional S-100 Bus slots. An adapter, PRI100-1, is provided allowing direct connection of the PRI100 to the smart controllers.

INTERFACE REQUIREMENTS

Connects to J4 of either the CPZ48000 SBCP or the CPS-MX SBSP.

J1(CPU)

PIN NO.	SIGNAL NAME	DESCRIPTION
1	RDYA	READY handshake from CPU, Channel A
2	STBA*	STROBE handshake to CPU, Channel A
3	n/c	n/c
4	n/c	n/c
5	D0A	DATA BIT 0, Channel A
6	D1A	DATA BIT 1, Channel A
7	D2A	DATA BIT 2, Channel A
8	D3A	DATA BIT 3, Channel A
9	D4A	DATA BIT 4, Channel A
10	D5A	DATA BIT 5, Channel A
11	D6A	DATA BIT 6, Channel A
12	D7A	DATA BIT 7, Channel A
13	D0B	DATA BIT 0, Channel B
14	D1B	DATA BIT 1, Channel B
15	D2B	DATA BIT 2, Channel B
16	D3B	DATA BIT 3, Channel B
17	D4B	DATA BIT 4, Channel B
18	D5B	DATA BIT 5, Channel B
19	D6B	DATA BIT 6, Channel B
20	D7B	DATA BIT 7, Channel B
21	RESET*	RESET from CPU (active low)
22	GND	GROUND
23	PINT*	PORT INTERRUPT (active low)
24	GND	GROUND
25	n/c	n/c
26	+5VDC	+5VDC

J2(MODIFIED PRIAM)

PIN NO.	SIGNAL NAME	DESCRIPTION
1	GND	GROUND
2	HCBUS0	HOST DATA BUS 0
3	HCBUS1	HOST DATA BUS 1
4	HCBUS2	HOST DATA BUS 2
5	HCBUS3	HOST DATA BUS 3
6	HCBUS4	HOST DATA BUS 4
7	HCBUS5	HOST DATA BUS 5
8	HCBUS6	HOST DATA BUS 6
9	HCBUS7	HOST DATA BUS 7
10	GND	GROUND
11	HRD*	ENABLE REGISTER TO HOST-BUS
12	GND	GROUND
13	HWR*	ENABLE HOST-BUS TO REGISTER
14	GND	GROUND
15	HAD2	HOST ADDRESS BUS 2
16	HAD1	HOST ADDRESS BUS 1
17	HAD0	HOST ADDRESS BUS 0
18	GND	GROUND
19	RESET*	RESET TO CONTROLLER
20	GND	GROUND
21	HIR*	HOST INTERRUPT
22	DTREQ*	DATA TRANSFER REQUEST TO HOST
23	HREAD*	DATA DIRECTION CONTROL TO CONTROLLER
24	DBUSENA*	CONTROLLER-READY TO HOST
25	BUSREQ*	DATA TRANSFER REQUEST TO HOST (SMART-E ONLY)

ADAPTER PRI100-1

J1(MODIFIED PRIAM)

PIN NO.	SIGNAL NAME	DESCRIPTION
1	GND	GROUND
2	HCBUS0	HOST DATA BUS 0
3	HCBUS1	HOST DATA BUS 1
4	HCBUS2	HOST DATA BUS 2
5	HCBUS3	HOST DATA BUS 3
6	HCBUS4	HOST DATA BUS 4
7	HCBUS5	HOST DATA BUS 5
8	HCBUS6	HOST DATA BUS 6
9	HCBUS7	HOST DATA BUS 7
10	GND	GROUND
11	HRD*	ENABLE REGISTER TO HOST-BUS
12	GND	GROUND
13	HWR*	ENABLE HOST-BUS TO REGISTER
14	GND	GROUND
15	HAD2	HOST ADDRESS BUS 2
16	HAD1	HOST ADDRESS BUS 1
17	HAD0	HOST ADDRESS BUS 0
18	GND	GROUND
19	RESET*	RESET TO CONTROLLER
20	GND	GROUND
21	HIR*	HOST INTERRUPT
22	DTREQ*	DATA TRANSFER REQUEST TO HOST
23	HREAD*	DATA DIRECTION CONTROL TO CONTROLLER
24	DBUSENA*	CONTROLLER-READY TO HOST
25	BUSREQ*	DATA TRANSFER REQUEST TO HOST (SMART-E ONLY)

ADAPTER PRI100-1

J2(PRIAM)

PIN NO.	SIGNAL NAME	DESCRIPTION
1	GND	GROUND
2	HCBUS0	HOST DATA BUS 0
3	HCBUS1	HOST DATA BUS 1
4	HCBUS2	HOST DATA BUS 2
5	HCBUS3	HOST DATA BUS 3
6	HCBUS4	HOST DATA BUS 4
7	HCBUS5	HOST DATA BUS 5
8	HCBUS6	HOST DATA BUS 6
9	HCBUS7	HOST DATA BUS 7
10	GND	GROUND
11	HRD*	ENABLE REGISTER TO HOST-BUS
12	GND	GROUND
13	HWR*	ENABLE HOST-BUS TO REGISTER
14	GND	GROUND
15	HAD2	HOST ADDRESS BUS 2
16	HAD1	HOST ADDRESS BUS 1
17	HAD0	HOST ADDRESS BUS 0
18	GND	GROUND
19	RESET*	RESET TO CONTROLLER
20	GND	GROUND
21	HIR*	HOST INTERRUPT
22	GND	GROUND
23	HREAD	DATA DIRECTION CONTROL TO CONTROLLER
24	DBUSENA*	CONTROLLER-READY TO HOST
25	GND	GROUND
26	DTREQ*	DATA TRANSFER REQUEST TO HOST
27	GND	GROUND
28	BUSREQ*	DATA TRANSFER REQUEST TO HOST (SMART-E ONLY)
29	GND	GROUND
30	HCBUS8	HOST DATA BUS PARITY (SMART-E ONLY)
31	GND	GROUND
32	RES	RESERVED
33	RES	RESERVED
34	RES	RESERVED
35	RES	RESERVED
36	RES	RESERVED
37	RES	RESERVED
38	RES	RESERVED
39	RES	RESERVED
40	RES	RESERVED

CONNECTOR REQUIREMENTS

PRI100	MATING CONNECTORS
J1 - ANSLEY 609-2617	ANSLEY 609-2630 (ICM SUPPLIED)
J2 - CANNON DB25S-731	CANNON DB25P-731 (* see note below)

PRI100-1	MATING CONNECTORS
J1 - CANNON DB25P-731	CANNON DB25S-731 (ICM SUPPLIED)
J2 - ANSLEY 609-4017	ANSLEY 609-4030 (CUSTOMER SUPPLIED)

* Customer supplied if connecting directly to PRI100. ICM supplied if using PRI100-1 Adapter.

SET-UP INSTRUCTIONS

To configure the PRI100 for the SMART controller, solder a jumper on JA from B-to-C.

To configure the PRI100 for the SMART-E controller, solder a jumper on JA from A-to-B.

PERSONALITY BOARD - SHUGART ASSOCIATES SYSTEM INTERFACE

PART NUMBER - SAS100

FUNCTION

The Shugart Associates System Interface(SASI) defines a Local I/O Bus which can be operated at data rates up to 1.5 megabytes per second. This bus provides I/O device independence so that disk drives, tape drives, printers and various other peripherals may be interfaced on the same I/O bus without modification to the host CPU's hardware or software. The interface protocol provides for connection of multiple initiators (devices capable of initiating an operation) and multiple targets(devices capable of responding to requests for operations). Arbitration logic is built in and a priority system awards control to the device that wins arbitration.

The SAS100 personality board converts the parallel port of either the CPZ48000 SBCP or the CPS-MX SBSP to a SASI I/O bus. Software is provided to emit bus timing in conformance with the SASI specification. The system integrator may interface SASI controllers such as the Data Technology Corporation's, Zebec and Sysgen line of controllers. Each have powerful attributes such as connecting hard disks with floppies, hard disks with tape streamers and connecting to high performance SMD type hard disks.

The SAS100 personality board is accompanied by an adapter board (SAS100-1). This adapter board converts the SAS100 DB25 connector interface to a 50 pin header connector interface with a pin assignment in exact conformance with the SASI Bus specification. The integrator may connect directly to the SAS100 with a DB25-to-SASI Interface cable or may connect via the SAS100-1 with a 50 pin flat ribbon cable.

INTERFACE REQUIREMENTS

Connects to J4 of either the CPZ48000 SBCP or the CPS-MX SBSP.

J1(CPU)

PIN NO.	SIGNAL NAME	DESCRIPTION
1	RDYA	READY handshake from CPU, Channel A
2	STBA*	STROBE handshake to CPU, Channel A
3	RDYB	READY handshake from CPU, Channel B
4	STBB*	STROBE handshake to CPU, Channel B
5	DOA	DATA BIT 0, Channel A
6	D1A	DATA BIT 1, Channel A
7	D2A	DATA BIT 2, Channel A
8	D3A	DATA BIT 3, Channel A
9	D4A	DATA BIT 4, Channel A
10	D5A	DATA BIT 5, Channel A
11	D6A	DATA BIT 6, Channel A
12	D7A	DATA BIT 7, Channel A
13	DOB	DATA BIT 0, Channel B
14	D1B	DATA BIT 1, Channel B
15	D2B	DATA BIT 2, Channel B
16	D3B	DATA BIT 3, Channel B
17	D4B	DATA BIT 4, Channel B
18	D5B	DATA BIT 5, Channel B
19	DB6	DATA BIT 6, Channel B
20	D7B	DATA BIT 7, Channel B
21	n/c	n/c
22	GND	GROUND
23	PINT*	PORT INTERRUPT (active low)
24	GND	GROUND
25	n/c	n/c
26	+5VDC	+5VDC

J2(MODIFIED SASI)

PIN NO.	SIGNAL NAME	DESCRIPTION
1	D0	DATA BIT 0
2	D2	DATA BIT 2
3	D4	DATA BIT 4
4	D6	DATA BIT 6
5	GND	GROUND
6	BSY*	BUSY
7	ACK*	ACKNOWLEDGE
8	RST*	RESET
9	MSG*	MESSAGE
10	SEL*	SELECT
11	C/D*	CONTROL/DATA
12	REQ*	REQUEST
13	I/O*	INPUT/OUTPUT
14	D1	DATA BIT 1
15	D3	DATA BIT 3
16	D4	DATA BIT 5
17	D7	DATA BIT 7
18	GND	GROUND
19	GND	GROUND
20	GND	GROUND
21	GND	GROUND
22	GND	GROUND
23	GND	GROUND
24	GND	GROUND
25	GND	GROUND

APAPTER SAS100-1

Connects to J2 of the SAS100 Personality Board.

J1(MODIFIED SASI)

PIN NO.	SIGNAL NAME	DESCRIPTION
1	DO	DATA BIT 0
2	D2	DATA BIT 2
3	D4	DATA BIT 4
4	D6	DATA BIT 6
5	GND	GROUND
6	BSY*	BUSY
7	ACK*	ACKNOWLEDGE
8	RST*	RESET
9	MSG*	MESSAGE
10	SEL*	SELECT
11	C/D*	CONTROL/DATA
12	REQ*	REQUEST
13	I/O*	INPUT/OUTPUT
14	D1	DATA BIT 1
15	D3	DATA BIT 3
16	D4	DATA BIT 5
17	D7	DATA BIT 7
18	GND	GROUND
19	GND	GROUND
20	GND	GROUND
21	GND	GROUND
22	GND	GROUND
23	GND	GROUND
24	GND	GROUND
25	GND	GROUND

ADAPTER SAS100-1

J2(SASI)

PIN NO.	SIGNAL NAME	DESCRIPTION
1	GND	GROUND
2	DB0	DATA BIT 0
3	GND	GROUND
4	DB1	DATA BIT 1
5	GND	GROUND
6	DB2	DATA BIT 2
7	GND	GROUND
8	DB3	DATA BIT 3
9	GND	GROUND
10	DB4	DATA BIT 4
11	GND	GROUND
12	DB5	DATA BIT 5
13	GND	GROUND
14	DB6	DATA BIT 6
15	GND	GROUND
16	DB7	DATA BIT 7
17	GND	GROUND
18	n/u	n/u
19	GND	GROUND
20	n/u	n/u
21	GND	GROUND
22	n/u	n/u
23	GND	GROUND
24	n/u	n/u
25	GND	GROUND
26	n/u	n/u
27	GND	GROUND
28	n/u	n/u
29	GND	GROUND
30	n/u	n/u
31	GND	GROUND
32	n/u	n/u
33	GND	GROUND
34	n/u	n/u
35	GND	GROUND
36	BSY*	BUSY
37	GND	GROUND
38	ACK*	ACKNOWLEDGE
39	GND	GROUND

40	RST*	RESET
41	GND	GROUND
42	MSG*	MESSAGE
43	GND	GROUND
44	SEL*	SELECT
45	GND	GROUND
46	C/D*	CONTROL/DATA
47	GND	GROUND
48	REQ*	REQUEST
49	GND	GROUND
50	I/O*	INPUT/OUTPUT

CONNECTOR REQUIREMENTS

SAS100	MATING CONNECTORS
J1 - ANSLEY 609-2617	ANSLEY 609-2630 (ICM SUPPLIED)
J2 - CANNON DB25S-731	CANNON DB25P-731 (*see note below)

SAS100-1	MATING CONNECTORS
J1 - CANNON DB25P-731	CANNON DB25S-731 (ICM SUPPLIED)
J2 - ANSLEY 609-5017	ANSLEY 609-5030 (CUSTOMER SUPPLIED)

* Customer supplied if connecting directly to SAS100. ICM supplied if using SAS100-1 Adapter.

SET-UP INSTRUCTIONS

(none required)

PERSONALITY BOARD - CLOCK/CALENDAR

PART NUMBER - CCB100

FUNCTION

The CCB100 provides a highly accurate real time clock which may be set by the CPZ48000 SBCP or the CPS-MX SBSP under software control. The time of year, month, day, hour, minute and second is maintained and may be read back by the CPU. A Ni-Cad battery is used to provide backup power to the time control chip. In this manner the real time clock is continously maintained even during extensive down time. This feature is quite useful for point-of-sale systems, inventory systems and other applications where continous clock monitoring is required. This board is also very useful in operating systems which feature date and time stamping such as TurboDOS. In a TurboDOS based system, this board may be connected to the master (CPZ48000) parallel port or may be connected to any one slave (CPS-MX) parallel port.

INTERFACE REQUIREMENTS

Connects to J4 of the CPZ48000 SBCP or the CPS-MX SBSP. No other interface cable is required.

CPU (J1)

PIN NO.	SIGNAL NAME	DESCRIPTION
1	n/c	n/c
2	GND	GROUND
3	n/c	n/c
4	n/c	n/c
5	D0A	DATA BIT 0, Channel A
6	D1A	DATA BIT 1, Channel A
7	D2A	DATA BIT 2, Channel A
8	D3A	DATA BIT 3, Channel A
9	GND	GROUND
10	GND	GROUND
11	GND	GROUND
12	GND	GROUND
13	D0B	DATA BIT 0, Channel B
14	D1B	DATA BIT 1, Channel B
15	D2B	DATA BIT 2, Channel B
16	D3B	DATA BIT 3, Channel B
17	D4B	DATA BIT 4, Channel B
18	D5B	DATA BIT 5, Channel B
19	D6B	DATA BIT 6, Channel B
20	D7B	DATA BIT 7, Channel B
21	n/c	n/c
22	GND	GROUND
23	n/c	n/c
24	GND	GROUND
25	n/c	n/c
26	+5VDC	+5VDC

CONNECTOR REQUIREMENTS

J1(CPU) - Ansley 609-2617 or equivalent

SETUP INSTRUCTIONS

No hardware setup instructions are required, software instructions follow.

The CCB-100 can be used under CP/M by attaching the personality board to the parallel port of the CPZ-48000 and using the CLKSETM program to set the time and DSPCLKM to display the time.

Under the TurboDOS operating system the CCB-100 clock module can be placed on the CPZ-48000 master or any CPS-MX slave processor.

If the CCB is on the CPZ-48000 the user can set the time by using the program CLKSETM. The time can be displayed by executing the program DSPCLKM. The CCB can automatically be read as system date and time when the module MSTRCLK is included in the sys file that is loaded into the CPZ-48000.

If the CCB is on the CPS-MX slave processor the user can set the time by using the program CLKSETS. The time can be displayed by executing the program DSPCLKS. The CCB can automatically be read as system date and time when the program SLVCLK.AUT is executed as a TurboDOS cold start program. There is no problem executing the program if the card is not attached, since it will simply return to the operating system.