# ADM 36
# Video Display Terminal
# Maintenance Manual

**LEAR SIEGLER, INC.**
**DATA PRODUCTS DIVISION**
901 EAST BALL ROAD, ANAHEIM, CALIFORNIA 92805

# ADM 36
# Video Display Terminal

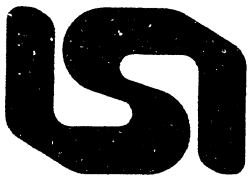

LEAR SIEGLER, INC.

# MAINTENANCE MANUAL

DP3361282F

©1982 LEAR SIEGLER, INC.

DECEMBER, 1982

# TABLE OF CONTENTS

SECTION PAGE

I GENERAL DESCRIPTION ..... 1-1

1.1 INTRODUCTION ..... 1-1

1.2 PURPOSE AND USE ..... 1-1

1.3 DESCRIPTION ..... 1-1
1.3.1 Features ..... 1-1

1.4 SPECIFICATIONS ..... 1-6

1.5 OPTIONS ..... 1-6
1.5.1 15 Inch Display Option ..... 1-6
1.5.2 Composite Video Option ..... 1-6
1.5.3 Tilt Mechanism Option ..... 1-6
1.5.4 International Keycap Option ..... 1-6
1.5.5 Integral Modem Option ..... 1-6
1.5.6 Block/Edit Mode Option ..... 1-6

1.6 RELATED DOCUMENTS ..... 1-6

II INSTALLATION ..... 2-1

2.1 INTRODUCTION ..... 2-1

2.2 SAFETY REQUIREMENTS ..... 2-1

2.3 UNPACKING AND INITIAL INSPECTION ..... 2-1

2.4 SITE REQUIREMENTS ..... 2-1

2.5 LINE VOLTAGE SELECTION ..... 2-2

2.6 SET-UP MODE ..... 2-2
2.6.1 SET-UP A Mode ..... 2-4
2.6.2. SET-UP B Mode ..... 2-5
2.6.3 SET-UP Mode Keys ..... 2-7

# TABLE OF CONTENTS (cont'd)

SECTION PAGE

2.6.3.1 Clear All Tabs (3) Key ..... 2-7
2.6.3.2 Line Local (4) Key ..... 2-7
2.6.3.3 Receive Speed (8) Key ..... 2-7
2.6.3.4 Reset (0) Key ..... 2-7
2.6.3.5 Set Clear Tab (2) Key ..... 2-7
2.6.3.6 SET-UP A/B (5) Key ..... 2-8
2.6.3.7 Toggle (6) Key ..... 2-8
2.6.3.8 Transmit Speed (7) Key ..... 2-8
2.6.3.9 80/132 Columns (9) Key ..... 2-8
2.6.4 Save SET-UP Features ..... 2-8
2.6.5 Recall SET-UP Features ..... 2-8
2.6.6 Default SET-UP Features ..... 2-9
2.6.7 Default Tabs ..... 2-9
2.6.8 Reset The Terminal ..... 2-9
2.6.9 SET-UP Features ..... 2-9
2.6.9.1 Answerback ..... 2-9
2.6.9.2 Auto Repeat ..... 2-10
2.6.9.3 Auto X-ON/X-OFF ..... 2-10
2.6.9.4 Background ..... 2-10
2.6.9.5 Bits Character ..... 2-10
2.6.9.6 Character Set ..... 2-11
2.6.9.7 Characters/Row ..... 2-11
2.6.9.8 Cursor Mode ..... 2-11
2.6.9.9 Flag ..... 2-11
2.6.9.10 Keyboard Type ..... 2-11
2.6.9.11 Keyclick ..... 2-11
2.6.9.12 Line Frequency ..... 2-11
2.6.9.13 Line Mode ..... 2-11
2.6.9.14 Local Echo ..... 2-11
2.6.9.15 Modem Control Mode ..... 2-11
2.6.9.16 Margin Bell ..... 2-12
2.6.9.17 New Line ..... 2-12
2.6.9.18 Parity ..... 2-12
2.6.9.19 Parity Sense ..... 2-12
2.6.9.20 Printer Baud Rate ..... 2-12
2.6.9.21 Printer Bits Character ..... 2-12
2.6.9.22 Printer Handshake ..... 2-12
2.6.9.23 Printer Parity ..... 2-12
2.6.9.24 Printer Parity Sense ..... 2-12
2.6.9.25 Printer Stop Bits ..... 2-12
2.6.9.26 Print Extent ..... 2-13
2.6.9.27 Print Terminator ..... 2-13
2.6.9.28 Receive Baud Rate ..... 2-13
2.6.9.29 Scroll Mode ..... 2-13
2.6.9.30 Stop Bits ..... 2-13
2.6.9.31 Terminal Mode ..... 2-13
2.6.9.32 Transmit Baud Rate ..... 2-13
2.6.9.33 Wrap-Around ..... 2-13
2.6.9.34 80/132 Clear Page ..... 2-14

# TABLE OF CONTENTS (cont'd)

SECTION PAGE

2.6.10 Self/Test Mode ..... 2-14
2.6.10.1 Self-Test Error Messages ..... 2-14
2.6.11 Problem Checklist ..... 2-14
2.6.12 Strapping Options ..... 2-14

2.7 INTERFACE INFORMATION ..... 2-15
2.7.1 RS-232C (Modem) Interface ..... 2-17
2.7.2 RS-422A (Modem) Interface ..... 2-17
2.7.3 20mA Current Loop (Modem) Interface ..... 2-17
2.7.4 Printer Port Interface ..... 2-17

2.8 INSTALLING THE ADM 36 ..... 2-20

2.9 POWER TURN-ON ..... 2-20

2.10 POWER TURN-OFF ..... 2-20

2.11 CARE OF THE ADM 36 ..... 2-20
2.11.1 Cleaning ..... 2-20
2.11.2 Inspection ..... 2-20

III OPERATION ..... 3-1

3.1 INTRODUCTION ..... 3-1

3.2 KEYBOARD ..... 3-1
3.2.1 Auto Repeating Keys ..... 3-1
3.2.2 Alphabetic Keys ..... 3-1
3.2.2.1 Caps Lock Key ..... 3-1
3.2.2.2 Shift Key ..... 3-1
3.2.3 Numeric And Special Character Keys ..... 3-2
3.2.4 Special Control ..... 3-2
3.2.4.1 Backspace Key ..... 3-2
3.2.4.2 Delete Key ..... 3-2
3.2.4.3 ESC Key ..... 3-2
3.2.4.4 Linefeed Key ..... 3-2
3.2.4.5 Return Key ..... 3-5
3.2.4.6 Space Bar ..... 3-5
3.2.4.7 Tab Key ..... 3-5
3.2.5 Cursor Control Keys ..... 3-6
3.2.6 Special Function Keys ..... 3-6
3.2.6.1 Break Key ..... 3-6
3.2.6.2 CTRL (Control) Key ..... 3-7
3.2.6.3 ENTER Key ..... 3-7
3.2.6.4 NO SCROLL Key ..... 3-8
3.2.6.5 SET-UP Key ..... 3-9
3.2.7 Numeric (Auxiliary) Keypad ..... 3-9

# TABLE OF CONTENTS (cont'd)

SECTION PAGE

3.2.8 Indicator Lights ..... 3-10
3.2.8.1 On/OFF Line Indicator Light ..... 3-10
3.2.8.2 KBD Locked Light ..... 3-10
3.2.8.3 L1-L4 Indicator Lights ..... 3-10

3.3 SPECIAL GRAPHICS AND CHARACTER SETS ..... 3-10
3.3.1 Special and Wide Point Graphics Character Sets ..... 3-10
3.3.2 European Character Sets ..... 3-11

3.4 CONTROL FUNCTIONS ..... 3-11
3.4.1 Control Character ..... 3-11
3.4.2 ANSI Control Sequences Mode ..... 3-16

3.5 SPECIAL GRAPHICS AND CHARACTER SET SELECTION ..... 3-18
3.5.1 LSIDHL - Double-High Line (LSI Private) ..... 3-18
3.5.2 LSIDWL - Double-Wide Line (LSI Private) ..... 3-18
3.5.3 SCS - Select Character Set ..... 3-18
3.5.4 LSISWSHL - Single-Wide, Single-High Line ..... 3-18

3.6 CURSOR FUNCTIONS ..... 3-19
3.6.1 CUB - Cursor Backward ..... 3-19
3.6.2 CUD - Cursor Down (No Scroll) ..... 3-19
3.6.3 CUF - Cursor Forward ..... 3-19
3.6.4 CUP - Cursor Position ..... 3-19
3.6.5 CPR - Cursor Position Report ..... 3-20
3.6.6 CUU - Cursor Up (No Scroll) ..... 3-20
3.6.7 HVP - Horizontal and Vertical Position (Set Cursor) ..... 3-20
3.6.8 IND - Index (Cursor Down With Scroll) ..... 3-20
3.6.9 NEL - New Line With Scroll ..... 3-20
3.6.10 LSICRC - Restore Cursor and Attributes (LSI Private) ..... 3-21
3.6.11 RI - Reverse Index (Cursor Up With Scroll) ..... 3-21
3.6.12 LSISCS - Save Cursor and Attributes (LSI Private) ..... 3-21

3.7 KEYPAD MODES ..... 3-21
3.7.1 LSIKPAM - Keypad Applicatin Mode (LSI Private) ..... 3-21
3.7.2 LSIKPNM - Keypad Numeric Mode ..... 3-21

3.8 SCREEN CONTROL AND EDIT FUNCTIONS ..... 3-21
3.8.1 DAQ - Define Area Qualification ..... 3-21
3.8.2 DL - Delete Line ..... 3-21
3.8.3 DCH - Delete Character ..... 3-22
3.8.4 ED - Erase In Display ..... 3-22
3.8.5 EL - Erase In Line ..... 3-22
3.8.6 HTS - Horizontal Tabulation Set ..... 3-22
3.8.7 IL - Insert Line ..... 3-22
3.8.8 SGR - Select Graphics Rendition ..... 3-23
3.8.9 LSIALN - Screen Alignment (LSI Private) ..... 3-23
3.8.10 LSISTBM — Set Top and Bottom Margins (LSI Private) ..... 3-23
3.8.11 TBC - Tabulation Clear ..... 3-23

# TABLE OF CONTENTS (cont'd)

SECTION PAGE

3.9 SET/RESET MODE ..... 3-23
3.9.1 RM - Reset Mode ..... 3-24
3.9.2 SM - Set Mode ..... 3-24

3.10 MODES APPLICABLE TO SET/RESET ..... 3-24
3.10.1 KAM - Keyboard Action Mode (Lock/Unlock) ..... 3-25
3.10.2 IRM - Insert/Replacement Mode ..... 3-25
3.10.3 ERM - Erasure Mode ..... 3-25
3.10.4 SRM - Send/Receive Mode (Local Echo) ..... 3-25
3.10.5 LNM - Line Feed/New Line Mode ..... 3-25
3.10.6 LSICKM - Cursor Keys Mode (LSI Private) ..... 3-26
3.10.7 LSIANM - ANSI/VT-52 Mode - (LSI Private) ..... 3-26
3.10.8 LSICOLM - Column Mode (LSI Private) ..... 3-26
3.10.9 LSISCLM - Scrolling Mode (LSI Private) ..... 3-26
3.10.10 LSISCNM - Screen Mode (LSI Private) ..... 3-26
3.10.11 LSIOM - Origin Mode (LSI Private) ..... 3-26
3.10.12 LSIWM - Wrap-around Mode (LSI Private) ..... 3-27
3.10.13 LSIARM - Auto Repeat Mode (LSI Private) ..... 3-27
3.10.14 LSIFF - Form Feed Mode (LSI Private) ..... 3-27
3.10.15 LSIEXT - Print Extent Mode (LSI Private) ..... 3-27

3.11 OUTPUT AND PRINT FUNCTIONS ..... 3-27
3.11.1 DSR - Device Status Report ..... 3-28
3.11.2 MC - Media Copy ..... 3-28

3.12 LED CONTROL FUNCTIONS ..... 3-29
3.12.1 LSILL - Load LEDs (LSI Private) ..... 3-29

3.13 HOST/TERMINAL STATUS AND CONTROL FUNCTIONS ..... 3-29
3.13.1 DA - Device Attributes ..... 3-29
3.13.2 LSIID - Identity Terminal (LSI Private) ..... 3-29
3.13.3 LSITST - Invoke Self-Test (LSI Private) ..... 3-29
3.13.4 LSIREPTPARM - Report Terminal Parameters (LSI Private) ..... 3-31
3.13.5 LSIREQTPARM - Request Terminal Parameters ..... 3-31
3.13.6 RIS - Reset (Terminal) To Initial State ..... 3-31

3.14 VT-52 MODE CONTROL SEQUENCES ..... 3-31
3.14.1 Cursor Up ..... 3-32
3.14.2 Cursor Down ..... 3-32
3.14.3 Cursor Left ..... 3-32
3.14.4 Cursor Right ..... 3-32
3.14.5 Cursor To Home ..... 3-32
3.14.6 Cursor Up With Scroll ..... 3-32
3.14.7 Direct Cursor Address ..... 3-32
3.14.8 Enter Alternate Keypad Mode ..... 3-32
3.14.9 Enter ANSI Mode ..... 3-32
3.14.10 Enter Graphics Mode ..... 3-32
3.14.11 Erase to End of Line ..... 3-32

# TABLE OF CONTENTS (cont'd)

SECTION PAGE

3.14.12 Erase to End of Screen ..... 3-33
3.14.13 Exit Alternate Keypad Mode ..... 3-33
3.14.14 Exit Graphic Mode ..... 3-33
3.14.15 Identify ..... 3-33
3.14.16 Inverse Video ..... 3-33
3.14.17 Normal Video ..... 3-33
3.14.18 Print Cursor Line Function ..... 3-33
3.14.19 Print Screen Function ..... 3-33
3.14.20 Select Auto Print (Line-at-a-Time) Mode ..... 3-33
3.14.21 Select Printer Controller Mode ..... 3-33
3.14.22 Terminate Auto Print (Line-at-a-Time) Mode ..... 3-33
3.14.23 Terminal Printer Controller Mode ..... 3-33

IV THEORY OF OPERATION ..... 4-1

4.1 GENERAL DESCRIPTION ..... 4-1

4.2 FUNCTIONAL DESCRIPTION ..... 4-1

4.3 THEORY OF OPERATION ..... 4-1
4.3.1 Introduction ..... 4-1
4.3.2 System Functional Description ..... 4-1

4.4 CPU SECTION DETAILED BLOCK DIAGRAM ..... 4-3
4.4.1 CPU Section Overview ..... 4-4
4.4.2 Z80 MPU U37 (Schematic P2) ..... 4-4
4.4.3 Address Decoder U58, U78 (Schematic P2) ..... 4-6
4.4.4 System Timing U19, U31, U41, U43 (Schematic P2 and P3) ..... 4-6

4.5 EXTERNAL INTERFACE SECTION DETAILED BLOCK DIAGRAM ..... 4-6
4.5.1 External Interface Section Overview ..... 4-7
4.5.2 Z80 Clock Timer Circuit U3 (Schematic P3) ..... 4-7
4.5.3 Z80 Serial I/O U4 (Schematic P3) ..... 4-8
4.5.4 MODEM Port J7 (Schematic P3A) ..... 4-9

4.6 MEMORY SECTION DETAILED BLOCK DIAGRAM ..... 4-10
4.6.1 Memory Section Overview ..... 4-10
4.6.2 2Kx8 ROMs U71-U75 (Schematic P6) ..... 4-11
4.6.3 2K RAM U76 (Schematic P6) ..... 4-11
4.6.4 Memory Buffer U60 (Schematic P2) ..... 4-11
4.6.5 Parallel I/O U29 (Schematic P3) ..... 4-11
4.6.6 Electrically Alterable ROM U16 (Schematic P3) ..... 4-12

4.7 KEYBOARD SECTION DETAILED BLOCK DIAGRAM ..... 4-12
4.7.1 Keyboard Section Overview ..... 4-12
4.7.2 F3870 Microcomputer U2 (Keyboard Schematic) ..... 4-13
4.7.3 Keyboard Matrix (Keyboard Schematic) ..... 4-14

# TABLE OF CONTENTS (cont'd)

SECTION PAGE

4.8 VIDEO SECTION DETAILED BLOCK DIAGRAM ..... 4-14
4.8.1 Video Section Overview ..... 4-14
4.8.2 Video Timing and Controller U38 (Schematic P4) ..... 4-14
4.8.3 Address Translator U49, U50 (Schematic P4) ..... 4-16
4.8.4 Address Selection Mux U39, U59, U77 (Schematic P4) ..... 4-16
4.8.5 Video RAM U80-U84, U66-U69 (Schematic P6B) ..... 4-16
4.8.6 Display RAM Buffer U64, U80 and Latch U65, U79 (Schematic P4) ..... 4-16
4.8.7 Attribute Latch U70 and Video Latch U57 (Schematic P4) ..... 4-17/18
4.8.8 Character Generator U56 (Schematic P5) ..... 4-17/18
4.8.9 Video Logic (Schematic P5) ..... 4-17/18

V MAINTENANCE ..... 5-1

5.1 INTRODUCTION ..... 5-1

5.2 PREVENTIVE MAINTENANCE ..... 5-1

5.3 CORRECTIVE MAINTENANCE ..... 5-1
5.3.1 Problem Identification ..... 5-1
5.3.2 Removal and Replacement ..... 5-4

5.4 ADJUSTMENTS ..... 5-7
5.4.1 Brightness Adjustment Procedure for the ADM 36 ..... 5-7
5.4.2 Vertical Adjustments ..... 5-8
5.4.3 Horizontal Adjustments ..... 5-8
5.4.4 Focus Adjustments ..... 5-8
5.4.5 Centering ..... 5-8
5.4.6 Power Supply Adjustments ..... 5-9

5.5 FACTORY SERVICE AND MAINTENANCE INFORMATION ..... 5-10
5.5.1 Depot Repair ..... 5-10
5.5.2 On-Site Maintenance ..... 5-10

VI REFERENCE DRAWINGS ..... 6-1
6.1 Reference Drawings ..... 6-1

VII PARTS INFORMATION ..... 7-1

## TABLE OF CONTENTS (cont'd)

# APPENDIX

SECTION PAGE

A BLOCK/EDIT MODE OPTION OPERATION ..... A-1
A.1 INTRODUCTION ..... A-1
A.2 DESCRIPTION ..... A-1
A.3 MAJOR OPERATIONAL MODES ..... A-1
A.3.1 On-Line Or Local Mode ..... A-1
A.3.2 Block/Edit Mode or Conversation ..... A-2
A.3.2.1 Full Duplex ..... A-2
A.3.2.2 Half Duplex ..... A-2
A.3.2.3 Local Echo ..... A-2
A.3.3 Protect Mode ..... A-2

A.4 SET-UP MODE ADDITIONS ..... A-3
A.4.1 Line Protocol ..... A-3
A.4.2 Turnaround Char/EOB ..... A-3
A.4.3 Auto Turnaround ..... A-3
A.4.4 Initial Direction ..... A-3
A.4.5 Block Edit Mode ..... A-3
A.4.6 Edit Key ..... A-3
A.4.7 Guarded Area Transmit ..... A-5
A.4.8 Erasure Mode ..... A-5
A.4.9 Space Compression ..... A-5
A.4.10 Line Transmit ..... A-5
A.4.11 Transmit Termination ..... A-5
A.4.12 Transmit Execution ..... A-5
A.4.13 Bold Protected ..... A-5
A.4.14 Reduced Protected ..... A-5
A.4.15 Underline Protected ..... A-6
A.4.16 Blink Protected ..... A-6
A.4.17 Reverse Protected ..... A-6
A.4.18 Normal Protected ..... A-6
A.4.19 End of Line Enable ..... A-6
A.4.20 End of Line Character ..... A-6

A.5 KEYBOARD OPERATION ..... A-6
A.5.1 TAB PF1 ..... A-7
A.5.2 (DEL) INSERT LINE PF2 ..... A-7
A.5.3 CHAR INSERT PF3 ..... A-7
A.5.4 (EDIT) DELETE CHAR PF4 ..... A-7
A.5.5 (CLEAR HOME - ..... A-7
A.5.6 BACK TAB , ..... A-7
A.5.7 (PRINT) ENTER ..... A-8
A.5.7.1 Line Transmit ..... A-8
A.5.7.2 Page Transmit (Block Transmission ..... A-8
A.5.8 Additional Indicators ..... A-8
A.5.8.1 CTS Indicator ..... A-8
A.5.8.2 DSR Indicator ..... A-8
A.5.8.3 Insert Indicator ..... A-9
A.5.8.4 Edit Indicator ..... A-9

# TABLE OF CONTENTS (cont'd)

SECTION PAGE

A.6 ADDITIONAL CONTROL SEQUENCES ..... A-9
A.6.1 PU2 - BACK TAB (LSI Private) ..... A-10
A.6.2 LSIPRO - Set Protected Attribute (LSI Private ..... A-10
A.6.3 SM/RM - Set/Reset Mode Sequences ..... A-10
A.6.3.1 GATM - Guarded Area Transmit Mode ..... A-10
A.6.3.2 TTM - Transmit Termination Mode ..... A-10
A.6.3.3 LSIEDM - Block/Edit Mode (LSI Private) ..... A-10
A.6.3.4 LSILTM - Line Transmit Mode (LSI Private) ..... A-11
A.6.3.5 LSISCFDM - Space Compression/Field Delimiter Mode (LSI Private) ..... A-11
A.6.3.6 LSITEM - Transmit Execution Mode (LSI Private ..... A-11
A.6.3.7 LSIEKEM - Edit Key Execution Mode (LSI Private) ... A-12
A.6.4 LSITEBC - Select Turnaround/End of Block Character (LSI Private) ..... A-12
A.6.5 LSISB - Send Block (LSI Private) ..... A-12
A.6.6 STS - Set Transmit State ..... A-12

**B ADM 36I KEYBOARD** ..... B-1

**C OPERATORS QUICK REFERENCE CHARTS** ..... C-1
ASCII CONTROL CODE CHART ..... C-2
SET-UP MODE KEYS SUMMARIZED ..... C-3
SPECIAL GRAPHICS AND WIDE POINT GRAPHICS CHARACTER SETS ..... C-4
ANSI CONTROL SEQUENCES SUMMARY ..... C-5
VT-52 MODE ESCAPE SEQUENCE SUMMARY ..... C-6

## TABLE OF CONTENTS (cont'd)

# LIST OF FIGURES


| FIGURE | | PAGE |
|---|---|---|
| 1-1 | ADM 36 Video Display Terminal shown with optional 15 inch screen | viii |
| 1-2 | ADM 36 USASCII Character Format (By Ascending ASCII Codes) with HEX CODE | 1-2 |
| 1-3 | ADM 36 Keyboard Layouts | 1-3 |
| 2-1 | ADM 36 Mounting Requirements | 2-2 |
| 2-2 | SET-UP Mode Memory Structure | 2-3 |
| 2-3 | SET-UP A Mode Display Screen | 2-4 |
| 2-4 | SET-UP B Mode Display Screen | 2-5 |
| 2-5 | Keys Used in the SET-UP Mode | 2-7 |
| 2-6 | Typical ADM 36 Applications | 2-16 |
| 2-7 | ADM 36 Rear Panel Controls | 2-17 |
| 2-8 | RS-232C (Modem) Interface Logic | 2-18 |
| 2-9 | RS-422A (Modem) Interface Logic | 2-18 |
| 2-10 | 20mA Current Loop (Modem) Interface Logic | 2-19 |
| 2-11 | Printer Interface Logic (RS-232C) | 2-19 |
| 3-1 | ADM 36 Keyboard | 3-2 |
| 3-2 | ADM 36 Indicator Lights | 3-10 |
| 3-3 | Basic Elements of the ANSI Control Sequences Format | 3-15 |
| 4-1 | ADM 36 Functional Block Diagram | 4-2 |
| 4-2 | CPU Section Block Diagram | 4-3 |
| 4-3 | Z80 MPU Block Diagram | 4-5 |
| 4-4 | External Interface Section Block Diagram | 4-7 |
| 4-5 | Memory Section Block Diagram | 4-10 |
| 4-6 | Keyboard Section Block Diagram | 4-13 |
| 4-7 | Video Section Block Diagram | 4-15 |
| 5-1 | Location of Principle ADM 36 Assemblies | 5-5 |
| 5-2 | Futaba Key Assembly | 5-6 |
| 5-3 | Power Supply Adjustments | 5-9 |
| A-1 | Additional Numeric Keypad Key Legends | A-6 |
| B-1 | ADM 36I Keyboard Layout | B-1 |

## TABLE OF CONTENTS (cont'd)

# LIST OF TABLES


| TABLE | | PAGE |
|---|---|---|
| 1-1 | ADM 36 Specifications | 1-7 |
| 2-1 | SET-UP B Mode Terminal Features Summary | 2-6 |
| 2-2 | SET-UP Mode Keys Summarized | 2-8 |
| 2-3 | Problem Checklist | 2-14 |
| 3-1 | Alphabetic Key Codes | 3-3 |
| 3-2 | Numeric and Special Character Codes | 3-4 |
| 3-3 | Special Control Key Codes | 3-5 |
| 3-4 | Cursor Control Key Code Sequences | 3-6 |
| 3-5 | Control Codes Generated by the CTRL Key in conjunction with another key | 3-7 |
| 3-6 | SET-UP Features Changeable by the Host Computer | 3-8 |
| 3-7 | Numeric Keypad Codes | 3-9 |
| 3-8 | US/UKASCII and European Character Sets | 3-11 |
| 3-9 | Special Graphics and Wide Point Graphics Character Sets | 3-11 |
| 3-10 | Control Characters Received From Host | 3-14 |
| 3-11 | ANSI Control Sequences Summary | 3-16 |
| 3-12 | Set/Reset Mode Control Sequence Parameters | 3-24 |
| 3-13 | Report Terminal Parameters | 3-30 |
| 3-14 | VT-52 Mode Escape Sequence Summary | 3-31 |
| 4-1 | Chip Select Signals | 4-6 |
| 4-2 | Interrupt, Read, Write Control Signals | 4-8 |
| 4-3 | Modem Port Controls | 4-10 |
| 5-1 | ADM 36 Troubleshooting Guide | 5-2 |
| 5-2 | ADM 36 Power Supply Troubleshooting Guide | 5-3 |
| A-1 | Additional Set-Up Mode Feature Summary | A-4 |
| A-2 | Additional Control Sequence Summary | A-9 |
| A-3 | Additional Set/Reset Mode Control Sequence Parameters | A-11 |
| B-1 | Keyboard Codes | B-2 |

**WARNING**

***This equipment generates, uses, and can radiate radio frequency energy and if not installed and used in accordance with the instruction manual, may cause interference to radio communications. As temporarily permitted by regulation it has not been tested for compliance with the limits for Class A computing devices pursuant to Subpart J of Part 15 of FCC Rules, which are designed to provide reasonable protection against such interference. Operation of this equipment in a residential area is likely to cause interference in which case the user at his own expense will be required to take whatever measures may be required to correct the interference.***

page 5-5

*Discharge anode voltage to ground before attempting to remove the CRT, the flyback assembly, or the circuit board.*

page 5-7

*A residual charge may exist across the flyback diode and a shock hazard exists even though insulated. Also, ensure that the diode is making proper contact in the connector.*

page 5-7

*Adjustments must be made with power applied to the* **ADM 36**. *To avoid electrical shock, use a non-conducting screwdriver for all applicable adjustments.*

# SUMMARY OF CAUTIONS AND NOTES

**CAUTIONS**

page 2-1

*Allow the ADM 36 to adjust to any change in the environment before applying power. Moving the unit from one location to another could produce internal condensation and adversely affect ADM 36 operation.*

page 2-20

*To avoid damage to the CRT screen when the terminal is to remain ON but unchanged for extended periods of time, reduce the screen brightness.*

page 5-6

*When installing a new flyback assembly, be sure the diode is installed with the white ring end towards the CRT.*

# SUMMARY OF CAUTIONS AND NOTES (cont'd)

## NOTES (cont'd)

page 2-4

*Brightness should be adjusted so that all three levels (bold, normal, and reduced) of video produce readable characters on the display.*

page 2-10

*Once the Answerback message steps have been completed the message will be temporarily stored, and can be saved with the Save Operation.*

page 2-10

*The factory default answerback message is "LSI ADM 36 VX.XX" will indicate the firmware version that is installed in the terminal.*

page 2-10

*If the host computer software does not support the AUTO X-ON/X-OFF codes data sent may be lost during the buffer full condition or when the terminal is in SET-UP mode.*

page 2-10

*The terminal will always stop transmission when an X-OFF code is received, and will resume transmission when an X-ON code is received, regardless of the AUTO X-ON/X-OFF feature setting.*

page 2-11

*If the "80/132 CLEARS SCREEN" feature is enabled (on), the screen will clear and the current contents lost when the characters are changed from 80 to 132 or from 132 to 80 per row.*

page 2-13

*A screen is printed by pressing the SHIFT and ENTER keys simultaneously, as explained in "Keyboard Controls" in* **Section 3.**

page 3-18

*If a line is either a Double-High or Double-Wide line, and the Single-Wide/Single-High line control sequence is used, the characters on the line will be positioned on the leftmost side of the screen.*

page 3-19

*The CUP control sequence depends on the number of lines specified in the Origin Mode setting. See "LSICOM - Origin Mode", this section, for an explanation of this mode.*

page 3-20

*The CPR control sequence depends on the Origin Mode setting. See "LSICOM-Origin Mode", this section, for an explanation of this mode.*

page 3-20

*The HVP control sequence depends on the Origin Mode setting. See "LSICOM-Origin Mode", this section, for an explanation of this mode.*

*The HVP control sequence is equivalent to the CUP control sequence.*

page 3-21

*The New Line With Scroll control sequence to equivalent to carriage return (CR) followed by Index control sequence.*

page 3-22

*Any complete line erased by the ED control sequence is returned to single-width mode.*

page 3-22

*If the cursor is in column 1 (leftmost), then ESC 0 K is equivalent to ESC 2 K.*

# SUMMARY OF CAUTIONS AND NOTES (cont'd)

## NOTES (cont'd)

page 3-26

*The line feed/new line mode does not affect the Index (IND) or Next Line (NEL) control sequences.*

page 3-26

*The cursor is moved to the home position when the origin mode is set or reset. Lines and columns are numbered consecutively, with the origin (home position) being line 1, column 1.*

page 3-29

*Not recommended for new design. Included for compatability only.*

page 3-32

*See "Keypad Modes" control sequence in the ANSI Control Sequence, this section for information concerning the alternate keypad mode options.*

page 5-8

*Some adjustments of the contrast may be required in set-up mode. A Shift S should then be performed to save current contrast level in NVR.*

page 5-9

*All power supply measurements are taken at full load using a DVM.*

page 5-9

*This fault may not necessarily be with the power supply itself.*

page 5-10

*All modifications and repairs are FOB Anaheim, California, Chicago, Illinois, or Philadelphia, Pennsylvania, whichever depot is used. All repairs are warranted for a period of 30 days. The freight responsibility for repairs made on out-of-warranty equipment is that of the customer. Return freight on repairs in warranty is paid by LSI/DPD.*

page A-3

*Data displayed in the margins (non-scrolling region) is always treated as protected. Editing cannot be performed outside the scrolling region, and data will not be transmitted from outside the region during block sends.*

page A-6

*If the Turnaround/EOB Char is selected as "CR" then the end of line character will always be an "RS" regardless of this set-up feature setting.*

page A-8

*To clear a pending transmission, cancel a transmission in progress, or unlock the keyboard, enter then exit Set-Up Mode.*

*Figure 1-1. ADM 36 Video Display Terminal (shown with optional 15 inch screen)*

# SECTION I
# GENERAL DESCRIPTION

## 1.1 INTRODUCTION

This section describes the primary functions of the Lear Siegler **ADM 36** Video Display Terminal (**figure 1-1**), along with its physical dimensions, specifications, and operating features.

## 1.2 PURPOSE AND USE

There are numerous applications of the **ADM 36**, all involving the transfer of data. Data transfer in some applications may be almost exclusively unidirectional either from the unit to the computer, or from the computer to the unit. A more frequent application, however, is one in chich an operator communicates with a computer, and the computer responds in accordance with its stored program.

## 1.3 DESCRIPTION

The **ADM 36** is a complete stand alone data terminal consisting of a Monitor Unit, and a separate Keyboard Unit. Both units contain two section lightweight enclosures which house the required circuits associated with their individual fucntions, At the rear of the Monitor Unit are the interface connectors, fuse, power cord, ON/OFF switch, and Keyboard connector.

The standard display screen is a 12-inch (30.5cm) diagonal CRT. The display format consits of an 80-character x 24-line or 132-character x 24-line page. **Figure 1-2** shows the standard 96 character USASCII format (with HEXadecimal codes) employed by the **ADM 36**.

### 1.3.1 Features

The **ADM 36** includes the following features:

- ANSI x 3.41-1974 and x 3.64-1979 code compatibility
- Full Duplex RS-232, RS-422, and 20mA Current Loop Communications Port
- Asynchronous RS-232C Serial Printer Port
- Two display formats: 80x24 or 132x24
- Non-Embedded Visual Attributes: blink, bold, underline, reduced, reverse, double high, double wide, and protected
- Eight selectable character sets including: USASCII, UKASCII, Spanish, French, German, Italian, Norwegian/Danish, and Swedish/Finnish
- Line drawing (Business Graphics) and wide point (132x120) graphics
- 7x9 character matrix, with descenders, in a 9x10 field. All points programmable through a 2716 PROM. (For example, continuous Arabic characters may be user programmed).
- Smooth or Jump Scroll
- User defineable horizontal split screen
- Non-volatile RAM stores all operating parameters. No switches need to be set by the user. Features are changed via the keyboard in Set-Up mode, using "English Legend" prompts on the display.
- A fast Z80 CPU and fast RAMs allow operation to 4800 baud with no X-ON/X-OFF cycles. No display flicker during screen reading or writing.
- 1280 character input buffer
- Video output option RS-170 compatible, standard monitors may be used; 25 MHz minimum bandwidth required for 132 character operation. Keyboard programmable brightness level.
- 50/60 Hz operation

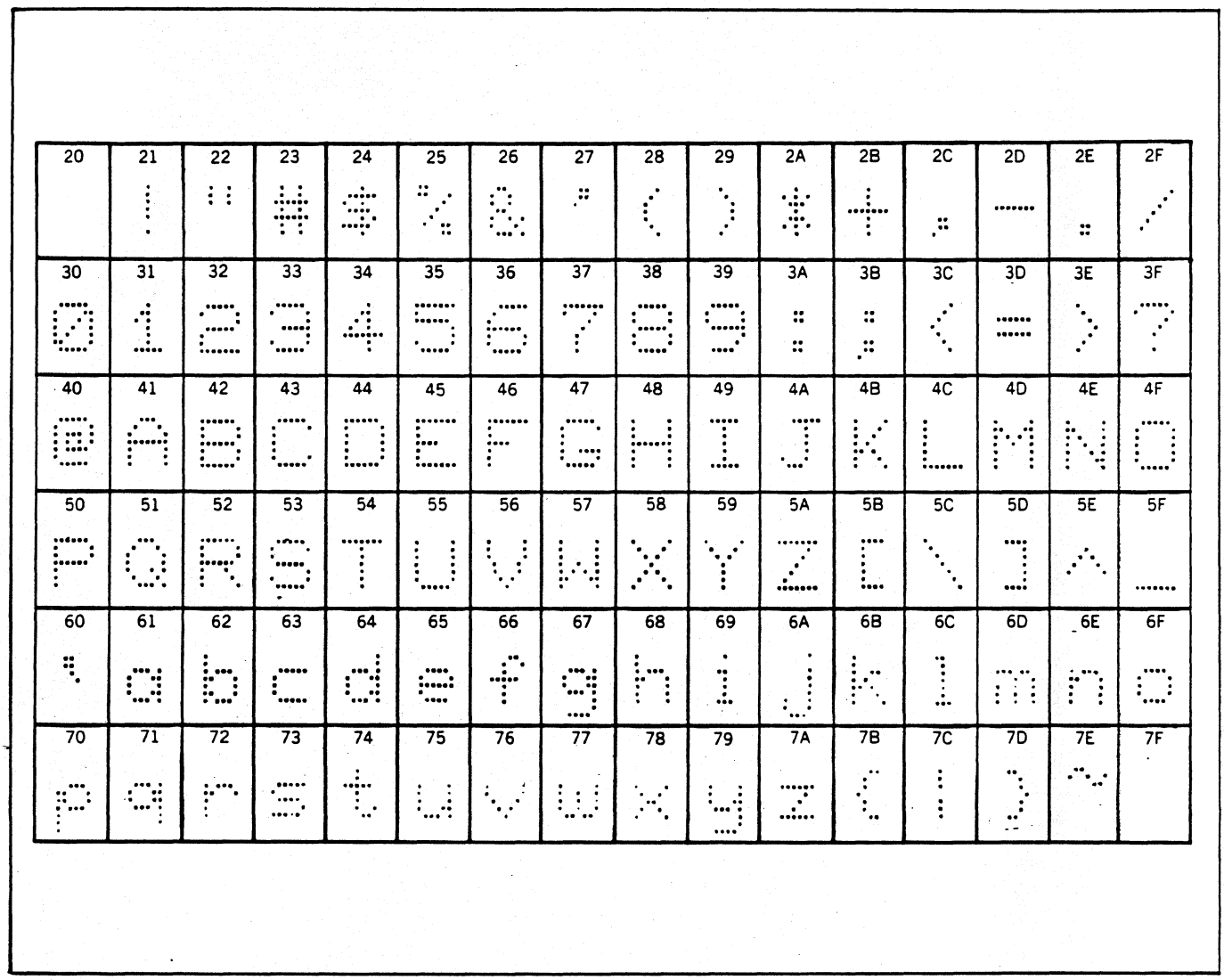


*Figure 1-2. ADM 36 USASCII Character Format (By Ascending ASCII Codes) with HEX Code*

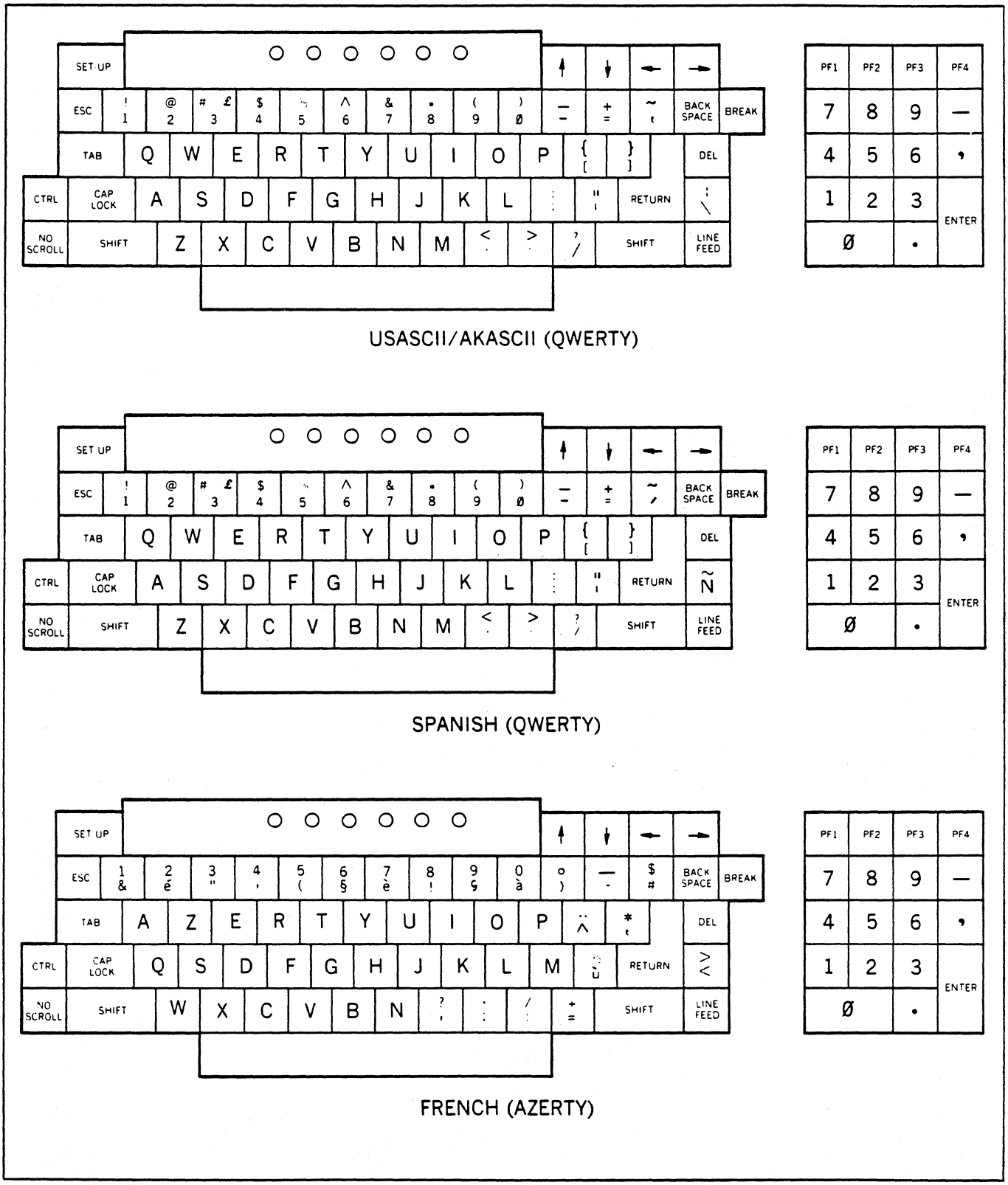


*Figure 1-3. ADM 36 Keyboard Layouts*

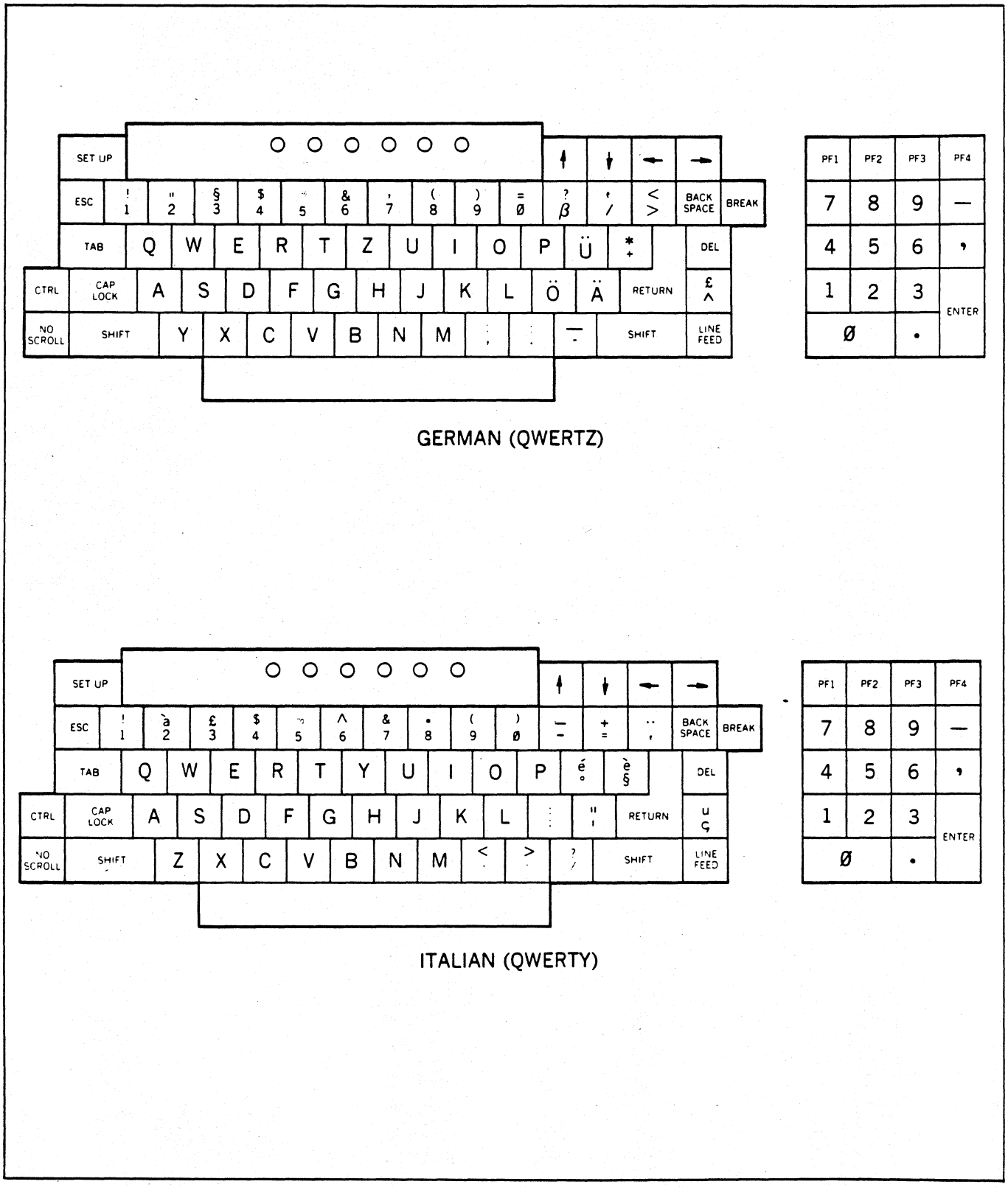


*Figure 1-3. ADM 36 Keyboard Layouts (continued)*

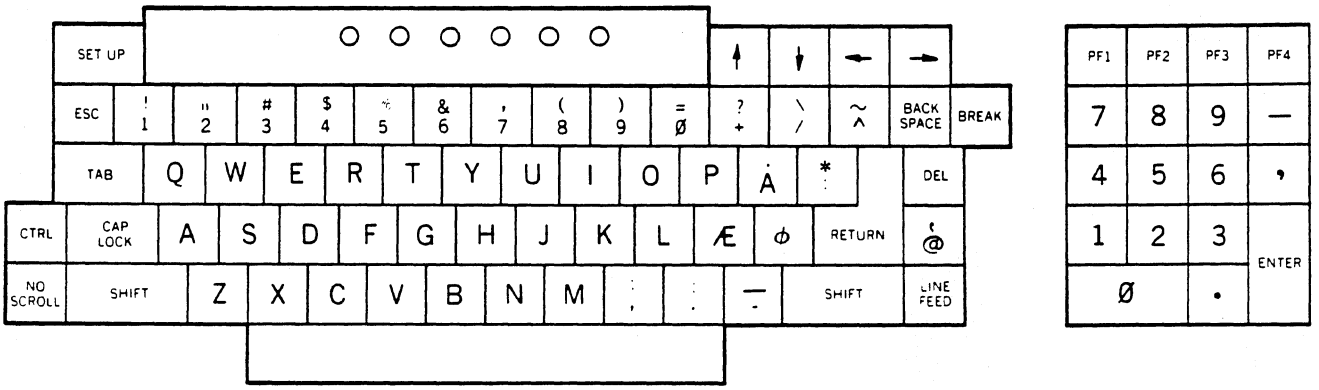


NORWEGIAN/DANISH (QWERTY)

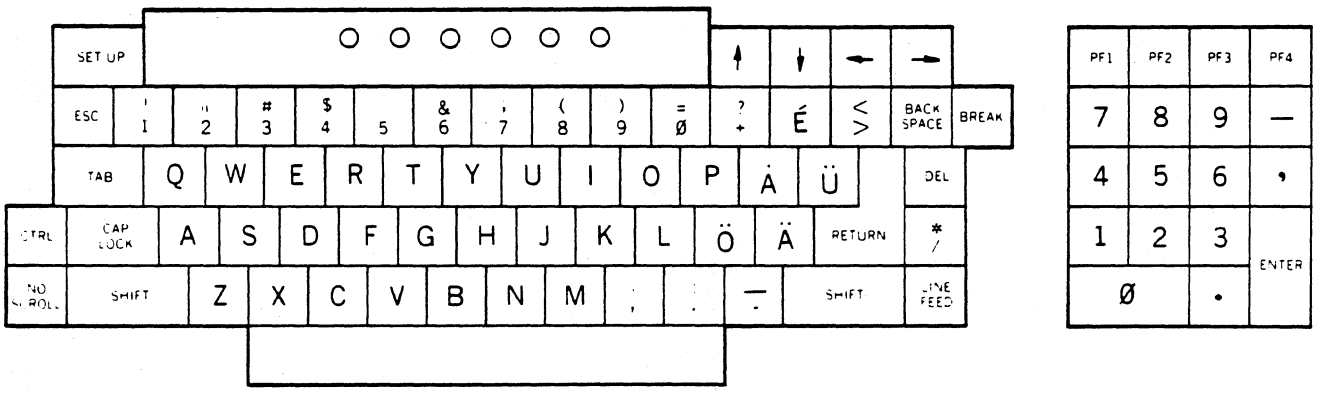


SWEDISH/FINNISH (QWERTY)

*Figure 1-3. ADM 36 Keyboard Layouts (continued)*

## 1.4 SPECIFICATIONS

Table 1-1 lists the specifications for the ADM 36.

## 1.5 OPTIONS

The ADM 36 can be equipped with several options, each requiring additions and/or modifications to the standard configuration of the unit. Following is a list of the options available for the ADM 36.

### 1.5.1 15 Inch Display Option

The ADM 36 can be ordered with an optional 15 inch (38.1cm) diagonal display. Display format remains the same - 80 characters x 24 lines or 132 characters x 24 lines.

### 1.5.2 Composite Video Option

The Composite Video Option provides the capability of driving an external display monitor. The signal levels and timing are RS-170 compatible. For proper operation at 132 columns, a monitor with a minimum of 25 MHz bandwidth is required.

### 1.5.3 Tilt Mechanism Option

The display tilt mechanism option allows the display to be placed in one of six positions. Adjustment range is from 10 degrees back to 5 degrees forward of vertical.

### 1.5.4 International Keycap Option

The international keycap set provides the capability of using a "QWERTY," "QWERTZ," or "AZERTY" style keyboard layout. The keycap set also includes the special character keycaps that are used by languages other than English. Refer to figure 1-3 for illustrations of the various keyboard layouts and associated keycap legend changes.

### 1.5.5 Integral Modem Option

The integral modem option allows the ADM 36 to be interfaced directly to a telephone line (no telephone required) for remote communications. The modem is compatible with 103 and 212A type modems utilizing full duplex operation, the modem is controlled through the ADM 36 keyboard and uses the CRT to display status conditions.

### 1.5.6 Block/Edit Mode Option

The block/edit mode option provides the capability of transmitting display data as a full or partial block-in addition to the standard full duplex conversational mode. This option also provides the ability to edit the display data prior to a block transmission. There are provisions included to allow half-duplex operation, with turnaround, as well. Appendix A of this manual describes the additional set-up mode and operational features that are included in the block/edit option.

## 1.6 RELATED DOCUMENTS

ADM 36 Maintenance Manual (and Illustrated Parts Catalog.)

# Table 1-1. ADM 36 Specifications

## DISPLAY

**CRT Screen:** 12-inch (30.5-cm) diagonal, P4 Phosphor or P31 Green Phosphor with etched faceplate

**Vertical Refresh Rate:** 50 Hz or 60 Hz, depending on line frequency; non-interlaced

**Horizontal Refresh Rate:** 15.7 kHz

**Display Format:** 80 characters/line x 24 lines or
132 characters/line x 24 lines

**Display Area:** 5.5 inches (13.9 cm) high x 7.75 inches (19.7cm) wide

**Character Set:** 96 ASCII characters

**Character Matrix:** 7 x 9 dot matrix (plug full 2-dot descenders)

**Character Field:** 9 x 10 dot matrix (6 mm high x 3 mm wide)

**Cursor:** 9 x 10 dot matrix, reverse image block cursor

**Cursor Control:** Backspace, Forespace, Up, Down, Tab, Return, Read Cursor, Cursor Addressing, and Line Feed

**Visual Attributes:** (Non-embedded) Blink, bold, reverse video, underline, reduced, protected fields displayed in reduced intensity, double high and double wide

## KEYBOARD FUNCTIONS

**Keyboard:** 26-letter alphabet with upper & lower case, numerics 0 thru 9; Punctuation, Return, Backspace, Tab, Shift, Caps Lock. Most keys are auto repeating (approximately 30 characters/second). The keyboard featues 3-key rollover protection.

**Numeric Key Pad:** 18 keys, 0 thru 9, Enter, Comma, Period, Minus, and four function keys

**Cursor Control:** Individual Cursor control keys

**Functional Command Keys:** SET-UP, Break, ESCape, Delete (DEL), Control, No Scroll, and Line Feed

## FORMATTING AIDS

**Protect Mode:** Screen formatting of protected and unprotected fields displayed in dual intensity

**Edit Operations:** Clear entire screen to spaces, clear unprotected positions to spaces, character insert by line, character delete by line, line insert, line delete, erase line to spaces, and erase page to spaces. All edit operations can be activated remotely by the host using ESCape sequences.

## TRANSMISSION MODES

**Conversation Mode:** Conversation mode/full-duplex operation, characters are transmitted as they are typed on the keyboard. (Host must echo the character to be displayed when the **ADM 36** is on-line.

**Control Characters:** All Control characters may be transmitted to computer

**Interface Levels:** RS-232C (V.24): +/- 12V per RS-232C specification
RS-422: 5 volts per RS-422 specification
Current Loop: Input 20mA = MAX (12V)
10mA = ON (4.1V)
5mA = OFF (1.5V)
470 + 1.8V equivalent input impedance reversal protected.
Output - 40V open circuit MAX.
100mA MAX

**Data Rates:** 50, 75, 110, 134.5, 150, 200, 300, 600 1200, 1800, 2000, 2400, 3600, 4800, 7200, 9600, 19200 Baud

**Parity:** Even, odd or none

**Video Interface:** RS-170 Output:
AC coupled (200 uF)
75 ohm impedance
2V peak to peak (.4V sync.)
Composite Sync and Video
Non-interlaced
60 Hz H = 15.737 Khz (262 lines)
50 Hz V = 60.06 Hz

50 Hz H = 15.585 Khz (312 lines)
V = 49.952 Hz

Dot Frequency:
14.7 Mhz @ 80 char/line
24.3 Mhz @ 132 char/line

Non-composite sync. output:
TTL Vertical sync. pulse
TTL Horizontal sync. pulse
Analog video signal

## Table 1-1. ADM 36 Specifications (continued)

### OPERATING ENVIRONMENT

5°C to 40°C(41°F to 104°F): 5% to 95% relative humidity without condensation

**Power Requirements:**

**Standard:** 115V 10%, 60 Hz
**Optional:** 230V 10%, 50 Hz

**Heat Dissipation:** 222 BTU/HR

**Dimensions - Monitor Unit**

**Width:** 18.0 inches (45.7 cm)
**Depth:** 13.5 inches (34.3 cm)
**Height:** 15.5 inches (39.4 cm)

**Dimensions - Keyboard Unit**

**Width:** 18.0 inches (45.7 cm)
**Depth:** 9.0 inches (22.9 cm)
**Height:** 2.8 inches ( 7.0 cm)

**Weight:** 28 pounds (12.60 kg) (Total)

### OPTIONS

Display Tilt Mechanism
15-inch (38.1 cm) Diagonal Display
Composite Video (RS-170)
Block/Edit Mode Operation
Integral Modem
International Keycaps
P-31 Green Phosphor (No Cost)
Micro Program Source Code Listing
Output Cables
Clear or Blank Keycaps
Special Paint
Key Locks

# SECTION II
# INSTALLATION

## 2.1 INTRODUCTION

This section contains installation instructions for the ADM 36. Also included are descriptions of on-site safety requirements, initial set-up, communications interfaces, plus procedures for power turn-on/self test, power turn-off and routine maintenance.

## 2.2 SAFETY REQUIREMENTS

No special safety precautions are required for ADM 36 installation.

## 2.3 UNPACKING AND INITIAL INSPECTION

Each ADM 36 is thoroughly inspected and carefully packaged prior to shipment. Every precaution is taken to ensure that each unit is complete and ready for installation at the customer's site. However, it is recommended that each unit be inspected upon receipt for transmit damage. Start by examining the exterior of the package for evidence of rough or careless handling; then perform a thorough visual inspection of the internal components and subassemblies. As a rule, more transportation companies will not honor claims for damage unless they are filed promptly; therefore, the following steps should be taken:

1. Verify that each item shown on the Sales Order Packing Slip has been included in the shipment. Contact Lear Siegler or your distributor immediately in the event of packing shortage.
2. Verify that the serial number of the unit corresponds to that shown on the invoice.
3. Check the hardware to determine if any assemblies or screws were loosened during shipment. Tighten as required.
4. Inspect for dust or foreign material which may impair electrical contact when cable connections are made. Vacuum to remove any loose dirt.
5. Install and test the ADM 36 as soon as possible after delivery. (This is very important since internal damage to the equipment cannot be determined by visual inspection alone).
6. If, in your opinion, the equipment has been damaged - either internally or externally - notify the agent of the transportation company immediately, and ask him to make an inspection. If assistance is needed to describe the extent of the damage or the repairs that will be necessary, contact your local Sales and Service Office.

## 2.4 SITE REQUIREMENTS

The ADM 36 may be conveniently used in a normal office environment as no special mounting provisions are required. It is recommended that the environment be weather protected with an ambient temperature range of 41 deg F to 104 deg F (5 deg C to 40 deg C) and a relative humidity of not greater than 95%.

**CAUTION**

*Allow the* **ADM 36** *to adjust to any change in the environment before applying power. Moving the unit from one location to another could produce internal condensation and adversely affect* **ADM 36** *operation.*

Whenever the ADM 36 is physically moved from a cold location to a warmer environment, be sure to allow sufficient time for the equipment temperature to equalize

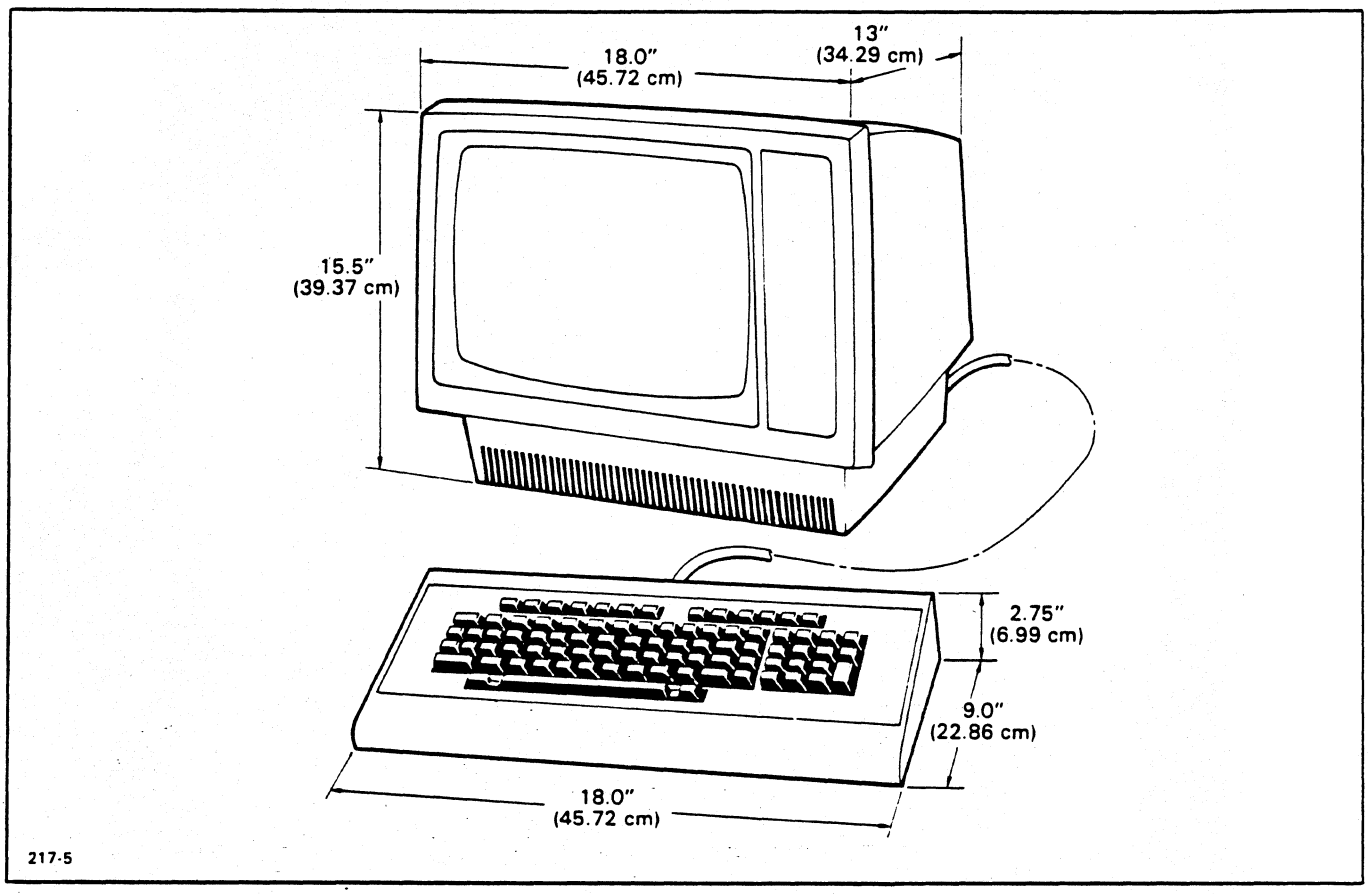


*Figure 2-1. ADM 36 Mounting Requirements*

with the warmer location before activating the unit. Condensation developed by the temperature differential could possibly impair the **ADM 36**. The physical dimensions of the **ADM 36** are shown in **figure 2-1**. The basic requirements for installation are as follows:

- Table or desk mounting
- Standard three-pronged 115-volt (230-volt optionally) power outlet.
- Cable connection to the computer, modem, serial printer, or other auxiliary device. If connection to a remote computer is desired, a modem or data set is usually required.

## 2.5 LINE VOLTAGE SELECTION

The **ADM 36** is shipped configured for either 115-volt or 230-volt operation, as specified in the purchase order. Any change in line voltage requires circuit changes which can be accomplished only by authorized maintenance personnel.

## 2.6 SET-UP MODE

The SET-UP mode function allows a user to select terminal features that are tailored to the operating environment of a specific system. The **ADM 36** selects and stores the terminal features in the SET-UP mode by means of nonvolatile memory (NVR), instead of switches or jumpers.

Once features are selected and written to NVR memory, the terminal always remembers what features have been selected. When the SET-UP mode is entered (by pressing the SET-UP key), the features stored in working memory are displayed on the screen. These features may be changed and can be stored in either working or permanent (NVR) memory. Working memory is achieved by selecting terminal features in the SET-UP mode without a Save operation. Permanent

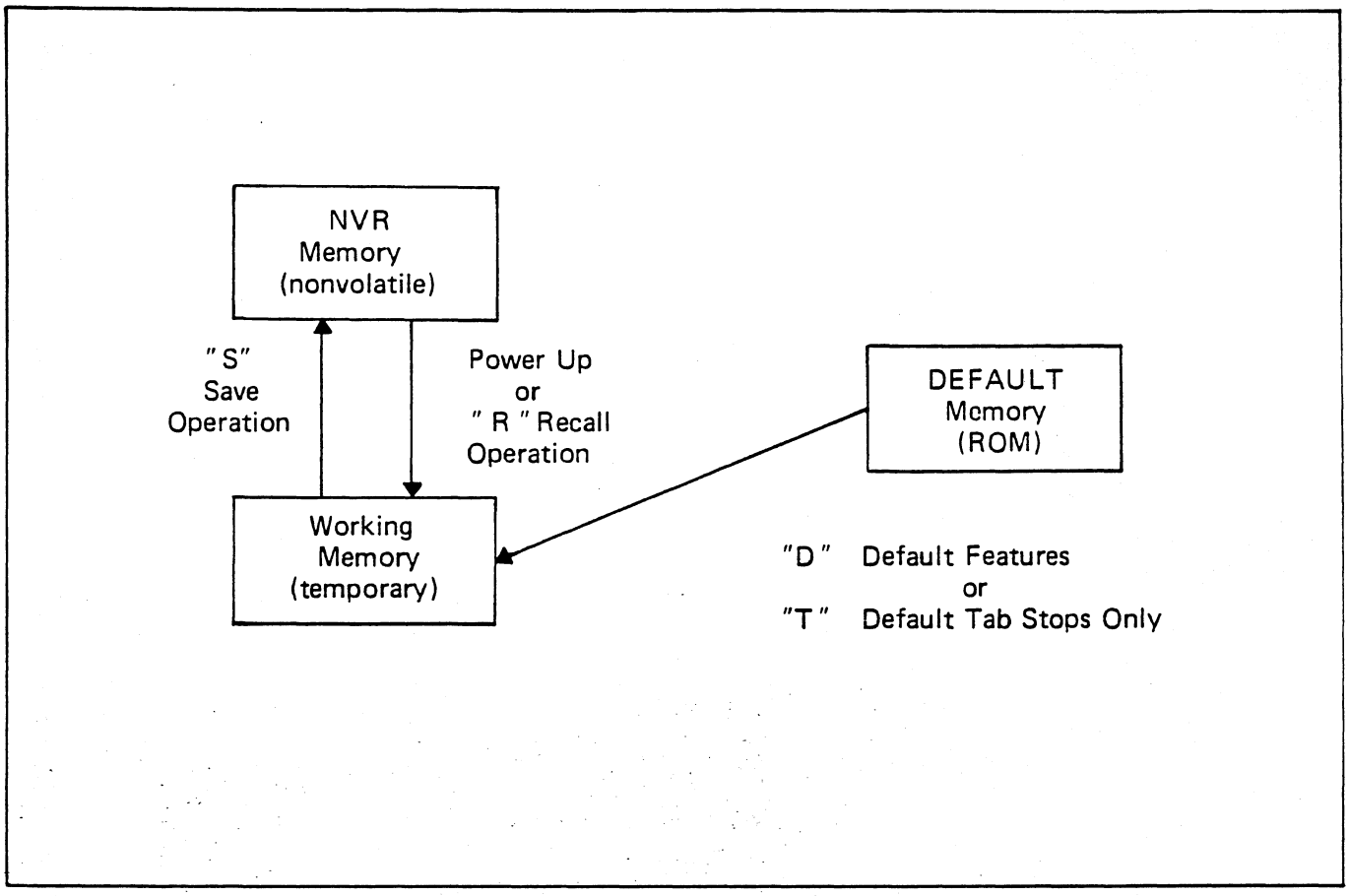


*Figure 2-2. SET-UP Mode Memory Structure*

memory is performed by a Save operation which writes to the NVR memory. (The Save operation is explained later in this section). The **ADM 36** also has a static (ROM) memory that allows you to set the NVR or working memory with default features and tabs that are factory preset in the ROM. The diagram depicts the memory locations of the terminal: If the terminal power is turned off, if the terminal is reset, or a recall operation is performed, all features stored in temporary memory will be replaced with the features in the NVR memory. (The Save, Recall, Default Features, Default Tabs, and Reset operations are explained in this section.)

There are two SET-UP modes; SET-UP A mode which displays the location of the tab stops on the last line of the screen and allows you to set or change tabs and adjust the screen brightness, and SET-UP B mode which displays the terminal features and options on the last line of the screen. SET-UP A and SET-UP B mode are explained in the following paragraphs.

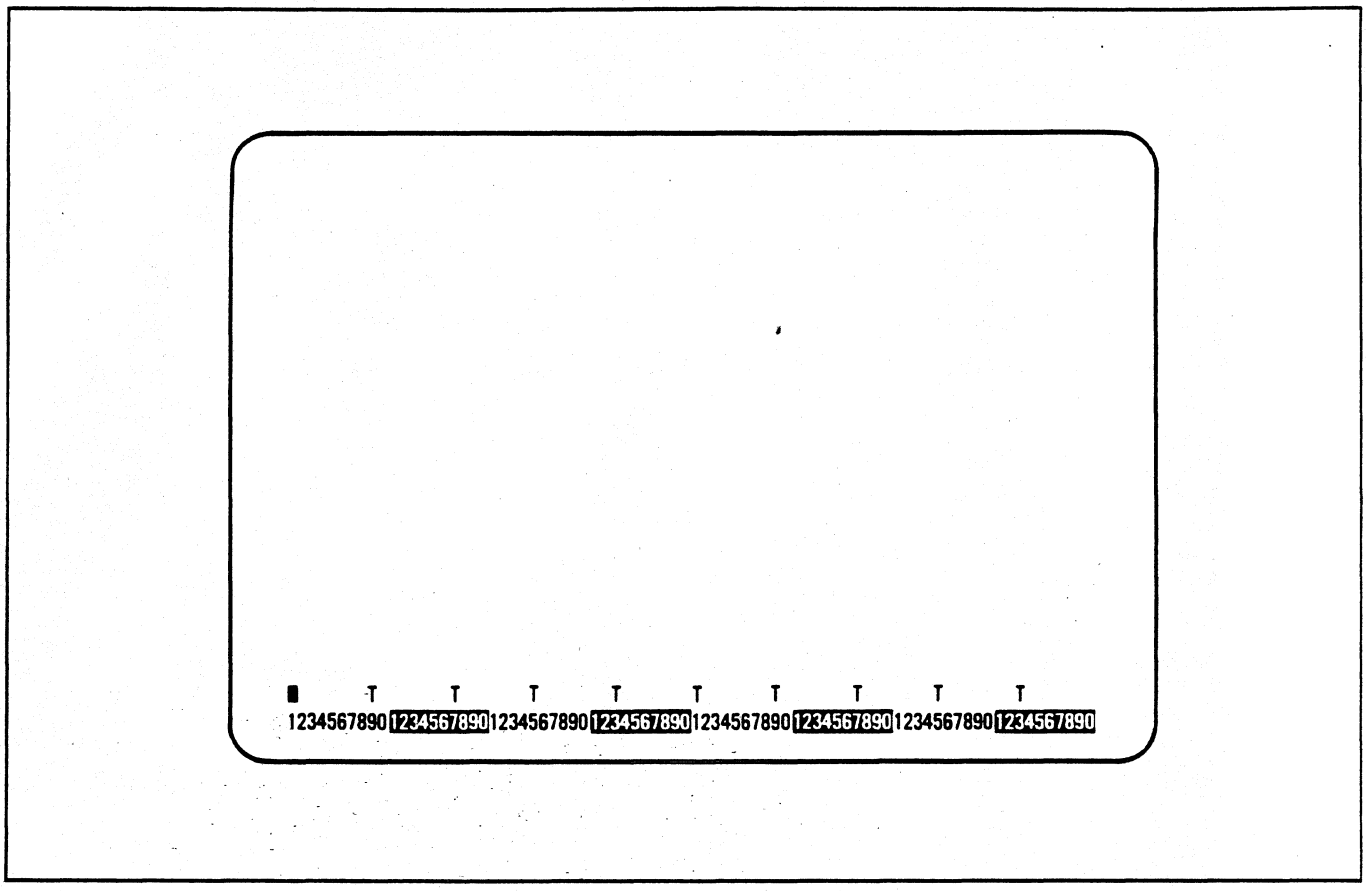


*Figure 2-3. SET-UP A Mode Display Screen*

## 2.6.1 Set-Up A Mode

To enter the SET-UP mode, press the SET-UP key. SET-UP A is automatically displayed first, and is shown in **figure 2-3.** The last line of the display screen contains a "ruler" which numbers each character position on a line. Each tab stop location is shown by a "T" character above the ruler.

SET-UP A may also be entered from SET-UP B by pressing the 5 key.

To exit SET-UP A mode, press the SET-UP key.

The features that can be changed in SET-UP A are the tabs and screen brightness. The following steps detail the procedures for setting or changing tabs and screen brightness.

Changing tabs in SET-UP A:

1. To clear all tab stops press the 3 key.
2. To set or clear an individual tab stop, position the cursor on the preset or new tab stop and press the 2 key.
3. To recall default tabs from the factory preset tabs, press the T key.

Changing the screen brightness in SET-UP A:

1. Press the ↑ key to increase the screen brightness.
2. Press the ↓ key to decrease the screen brightness.

**Note**

*Brightness should be adjusted so that all three levels (bold, normal, and reduced) of video produce readable characters on the display.*

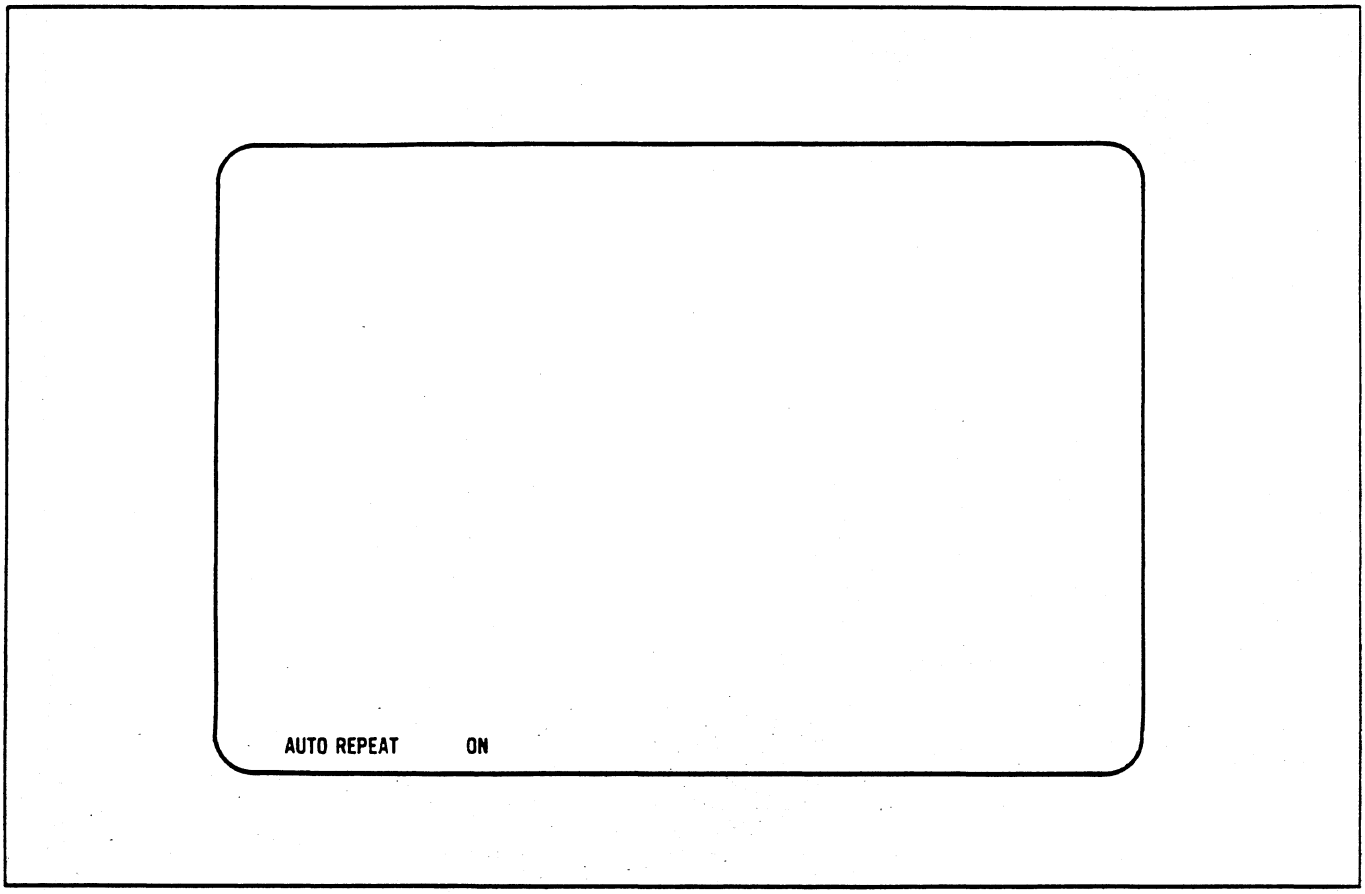


*Figure 2-4. SET-UP B Mode Display Screen*

## 2.6.2 SET-UP B Mode

The SET-UP B mode may only be entered from SET-UP A mode. While in SET-UP A mode, press the 5 key on the main keyboard. The screen will display the first SET-UP feature on the last line of the screen, along with the feature options.

Only one feature is displayed on the screen at a time. In order to display or change each feature, perform the following steps:

1. To step forward through each terminal feature in SET-UP B, press the → key or space bar. To step backward through each terminal feature, press the ← key.

2. To change a feature, step to the desired feature and press the 6 key. Each time the 6 key is pressed the feature option will change, generally to the opposite state.

To exit SET-UP B, press the SET-UP key.

Figure 2-8 is an example of the display screen in SET-UP B.

**Table 2-1** summarizes the terminal features and options presented in SET-UP B mode. (Each feature is described in detail in "SET-UP Features", this section).

# Table 2-1. SET-UP B Mode Terminal Features Summary.

| FEATURE | OPTIONS (Factory Default Settings are indicated in Bold Type) |
|---|---|
| FOR OPERATOR COMFORT: | |
| Auto Repeat | **On** or Off |
| Background | **Dark** or Light |
| Cursor Mode | **Block** or Underline |
| Keyclick | **On** or Off |
| Margin Bell | On or **Off** |
| Scroll Mode | Jump or **Smooth** |
| Wrap-Around | On or **Off** |
| FOR HOST COMPATIBILITY: | |
| Auto X-ON/X-OFF | **On** or Off |
| Bits/Character | 7 or **8** |
| Character Set | **US ASCII**, German, French, S/F (Swedish/ Finnish), DK/N (Danish/Norwegian), UK ASCII, Spanish, or Italian |
| Character/Row | **80** or 132 |
| Flag | **0** through 15 |
| Keyboard Type | **QWERTY**, QWERTZ, AZERTY, or CUSTOM |
| Line Mode | **Local** or On-Line |
| Local Echo | On or **Off** |
| Modem Control Mode | **Off**, Modem, DIG LP BK (Digital Loop Back), or, ANA LP BK (Analog Loop Back) |
| New Line | On or **Off** |
| Parity | On or **Off** |
| Parity Sense | **Odd** or Even |
| Printer Baud Rate | Same as Transmit Baud Rate **below** |
| Printer Bits/Char. | 7 or **8** |
| Printer Handshake | **X-ON/X-OFF** or RTS |
| Printer Stop Bits | **1** or 2 |
| Printer Parity | On or **Off** |
| Printer Parity Sense | **Odd** or Even |
| Print Extent | Full or **Partial** |
| Print Terminator | None or **Form-Feed** |
| Receive Baud Rate | 50, 75, 110, 134.5, 150, 200, 300, 600, 1200, 1800, 2000, 2400, 3600, 4800, **9600**, 19200 |
| Stop Bits | **1** or 2 |
| Terminal Mode | **ANSI** or VT-52 |
| Transmit Baud Rate | 50, 75, 110, 134.5, 150, 200, 300, 600, 1200, 1800, 2000, 2400, 3600, 4800, **9600**, 19200 |
| 80/132 Clears Screen | **On** or Off |
| INSTALLATION: | |
| Line Frequency | 50 or **60** |

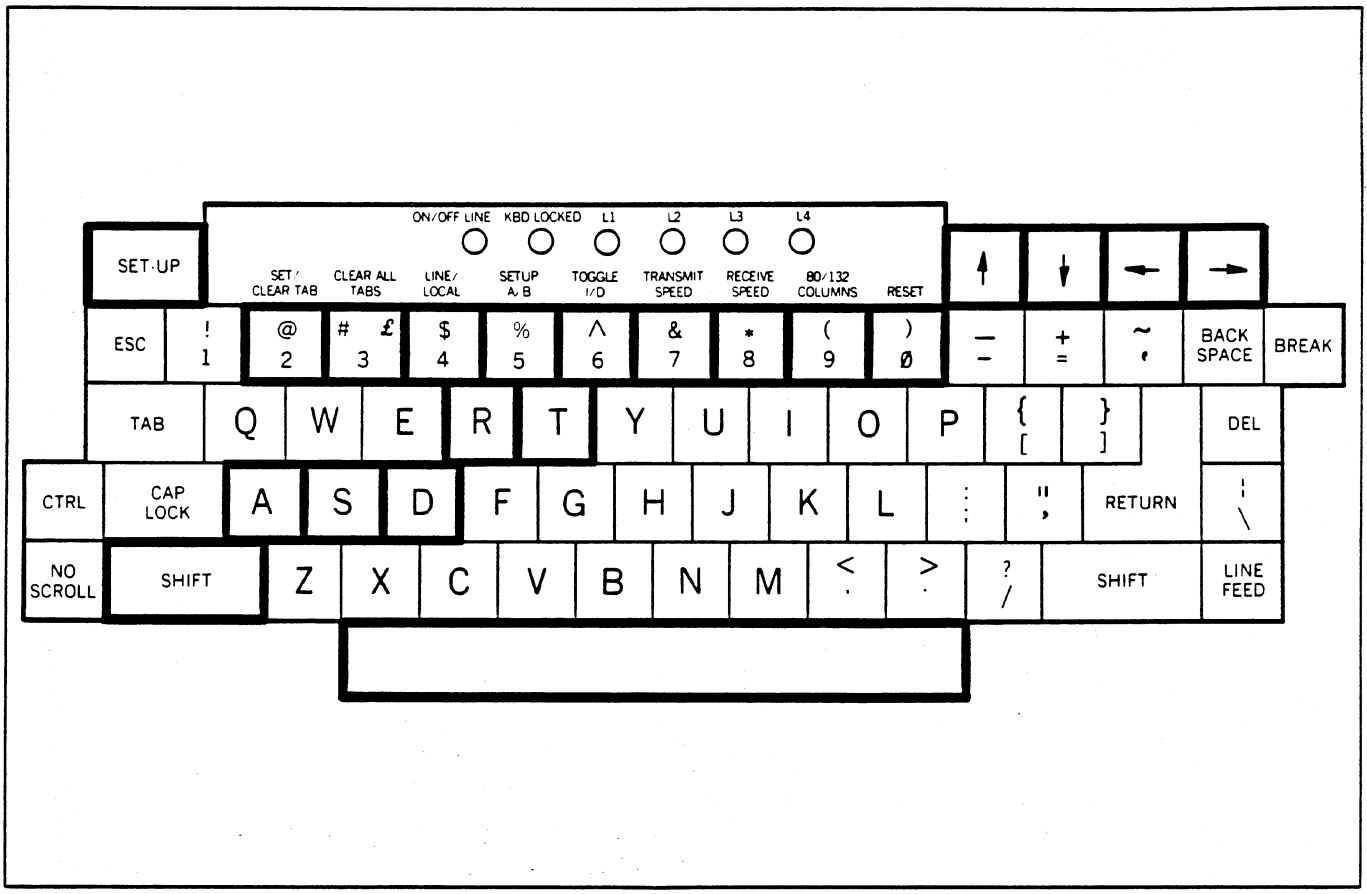


*Figure 2-5. Keys Used in the SET-UP Mode*

## 2.6.3 SET-UP Mode Keys

The keys used in the SET-UP mode are illustrated in **figure 2-5**, and explained in the following paragraphs. The SET-UP keys are presented in alphabetical order. (See **Table 2-2** for a summary of the SET-UP mode keys.)

### 2.6.3.1 Clear All Tabs (3) Key

The Clear All Tabs (3) key clears all horizontal tabs set in the terminal when in SET-UP A Mode.

### 2.6.3.2 Line Local (4) Key

The LINE/LOCAL (4) Key places the terminal in either the ON LINE or LOCAL mode when in the SET-UP mode. When the terminal is in the ON LINE mode, it communicates with the host system. When the terminal is in the LOCAL mode, it is functionally disconnected from the host system. (See "Line Mode" under the **SET-UP FEATURES**, this section), for an explanation of the ON LINE or LOCAL mode.

### 2.6.3.3. Receive Speed (8) Key

When the terminal is in SET-UP B mode, the Receive Speed (8) key takes the terminal through the receive baud rate settings in ascending order.

### 2.6.3.4 Reset (0) Key

The Reset (0) key starts the reset sequence when the terminal is in the SET-UP mode. The Reset (0) key has the same result as turning the terminal power off and then on.

### 2.6.3.5 Set Clear Tab (2) Key

The Set/Clear Tab (2) key sets or clears individual horizontal tabs when in SET-UP A mode.

**Table 2-2. SET-UP Mode Keys Summarized.**

| KEY | SET-UP A MODE | SET-UP B MODE |
|---|---|---|
| SET-UP | Exit SET-UP mode | Exit SET-UP mode |
| 2 (Set/clear tab) | Set/Clear tab at current position | Ignored |
| 3 (Clear all tabs) | Clear all tabs | Ignored |
| 4 (Line/local) | Go to SET-UP B - toggle line/local | Toggle line/local |
| 5 (Set-up A/B) | Go to SET-UP B | Go to SET-UP A |
| 6 (Toggle) | Ignored | Change feature setting |
| 7 (Transmit speed) | Go to SET-UP B transmit baud rate | Change transmit baud rate |
| 8 (Receive speed) | Go to SET-UP B receive baud rate | Change receive baud rate |
| 9 (80/132 columns) | Toggle 80/132 | Toggle 80/132 |
| 0 (Reset) | Resets terminal | Resets terminal |
| A (Shifted) | Ignored | Enter Answerback mode |
| R (Shifted) | Recall features from NVR | Recall features from NVR |
| S (Shifted) | Save features to NVR | Save features to NVR |
| T (Shifted) | Recall default tabs | Ignored |
| D (Shifted) | Recall default features | Recall default features |
| ↑ | Increase brightness | Increase brightness |
| ↓ | Decrease brightness | Decrease brightness |
| → | Moves cursor to right | Move to next features |
| ← | Moves cursor to left | Return to previous feature |
| Space | Move cursor to right | Move to next feature |
| RETURN | Return cursor to left | Return to first feature |

### 2.6.3.6 SET-UP A/B (5) Key

The SET-UP A/B (5) Key switches the terminal from SET-UP A to SET-UP B or from SET-UP B to SET-UP A, when the terminal is in the SET-UP mode.

### 2.6.3.7 Toggle (6) Key

When in the SET-UP B mode, the Toggle I/O (6) key changes the displayed feature setting, generally to the opposite state. On features with more than one setting, toggle will "rotate" through all the possible states.

### 2.6.3.8. Transmit Speed (7) Key

When the terminal is in SET-UP B mode, the Transmit Speed (7) key takes the terminal through the transmit baud rate settings in ascending order.

### 2.6.3.9 80/132 Columns (9) Key

When the terminal is in SET-UP mode, the 80/132 columns (9) key switches the display screen line size from 80 to 132 characters or from 132 to 80 characters per line.

## 2.6.4 Save SET-UP Features

The Save operation stores the SET-UP features from working memory to permanent NVR memory. The following steps detail the procedure for saving SET-UP features:

1. Press the SET-UP key to place the terminal in the SET-UP mode.
2. Press the SHIFT and S keys simultaneously. After a brief wait, the terminal will return to the SET-UP mode.
3. Press the SET-UP key to exit the SET-UP mode.

## 2.6.5 Recall SET-UP Features

The Recall operation replaces SET-UP features in working memory with features stored in NVR memory. The following steps detail the procedure for recalling stored SET-UP features:

1. Press the SET-UP key to place the terminal in the SET-UP mode.

2. Press the SHIFT and R keys simultaneously. After a brief wait, the terminal will return to the SET-UP mode.
3. Press the SET-UP key to exit the SET-UP mode.

### 2.6.6 Default SET-UP Features

The factory set of SET-UP features (as stored in the ROM) may be placed in working memory with the Default operation. The following steps detail the procedure to copy the default features setting to the working memory:

1. Press the SET-UP key to place the terminal in the SET-UP mode.
2. Press the SHIFT and D keys simultaneously.
3. Press the SET-UP key to exit the SET-UP mode.

### 2.6.7 Default Tabs

The tab stops set at the factory (as stored in the ROM) may be placed in working memory with the Default Tab operation. The following steps detail the procedure to copy the default tabs to the working memory:

1. Press the SET-UP key to place the terminal in the SET-UP mode.
2. Press the SHIFT and T keys simultaneously.
3. Press the SET-UP key to exit the SET-UP mode.

### 2.6.8 Reset the Terminal

The reset operation resets the terminal from the keyboard. When the terminal is reset, the memory is cleared and the self-test program is run as if the terminal power had been turned off and then on. The following steps detail the procedure to reset the terminal:

1. Press the SET-UP key to place the terminal in the SET-UP mode.
2. Press the 0 (zero) key on the main keyboard. The terminal will be reset, and power on self-test will be run. The terminal features will be set according to the permanent SET-UP features in NVR memory.

### 2.6.9 SET-UP Features

The **ADM 36** SET-UP features fall into one of three categories; operator preference, host computer compatibility or interface, and installation (as summarized in **Table 2-1**).

The SET-UP features are explained in the following paragraphs, and are presented in alphabetical order.

#### 2.6.9.1 Answerback

The Answerback feature provides the terminal the capability of identifying itself by sending a message to the host computer. The Answerback feature is a question and answer sequence where the terminal responds to a question of identifying itself from the host computer via an "ENQ" control code. The entire sequence takes place automatically without operator action, and without writing to the display screen. It is also possible to transmit the Answerback message by pressing CTRL and BREAK keys simultaneously.

The following steps detail how to type an Answerback Message into the terminal:

1. Place the terminal in SET-UP B mode.
2. Press the SHIFT and A keys simultaneously. The terminal will respond by displaying the current Answerback message.
3. Type the message delimiter character, which may be any character not used in the actual Answerback message. The message delimiter is not a part of the Answerback message. If a mistake is made when typing the message, type the message delimiter character again and go back to Step 1. This is the only way to correct errors in the Answerback message.
4. Type the Answerback message. The message may have up to 20 characters, including space and control characters. Control characters are displayed as a ◆ character to indicate their presence in the message.
5. Type the message delimiter character, Answerback message, and the message

delimiter character. The Answerback message then disappears from the screen.

**Note**

*Once the Answerback message steps have been completed the message will be temporarily stored, and can be saved with the Save Operation.*

To look at the Answerback message, do the following:

1. Enter SET-UP B.
2. Press SHIFT and A keys.
3. Press SET-UP key (message is not changed) to exit SET-UP mode.

**Note**

*The factory default Answerback Message is "LSI ADM 36 VX.XX" where X.XX will indicate the firmware version that is installed in the terminal.*

### 2.6.9.2 Auto Repeat

The Auto Repeat feature allows a key to be automatically repeated when held down for more than .5 seconds. This feature enables Auto Repeat of all keys with the following exceptions.

SET-UP
ESC
NO SCROLL
TAB
RETURN
CTRL and any other key

### 2.6.9.3 Auto X-ON/OFF

The auto X-ON/OFF feature is used to stop and start transmission of data from the host computer to the terminal for specified events. The X-OFF (DC3) code equals stop, and X-ON (DC1) code equals start. The **ADM 36** automatically generates the synchronizing code X-ON and X-OFF. When the AUTO X-ON/X-OFF feature is enabled (on), the **ADM 36** will generate the X-OFF code when one of the following events occur:

1. The NO SCROLL key is pressed.
2. The terminal is placed in SET-UP mode.
3. A CRTL S (X-OFF code) key sequence is pressed.
4. The internal buffer (1280 characters) is 64 characters away from being full. (This is transparent to the operator.)

To resume transmission from the host computer to the terminal, an X-ON code must be generated. An X-ON code is generated by one of the following conditions:

1. The NO SCROLL key is pressed again.
2. The terminal is taken out of SET-UP mode (by pressing the SET-UP key).
3. A CTRL Q (X-ON code) key sequence is pressed.
4. The buffer empties (transparent to the operator).

**Note**

*If the host computer software does not support the AUTO X-ON/X-OFF codes data sent may be lost during the buffer full condition or when the terminal is in SET-UP mode.*

**Note**

*The terminal will always stop transmission when an X-OFF code is received, and will resume transmission when an X-ON code is received, regardless of the AUTO X-ON/X-OFF feature setting.*

### 2.6.9.4 Background

The Background feature is used by the operator to change the type of background of the screen. In normal video mode, the screen contains light characters on a dark background. In reverse video mode, the screen contains dark characters on a light background.

### 2.6.9.5 Bits Character

The Bits/Character feature enables the **ADM 36** to transmit and receive either 7- or 8-bit characters. When using 8-bit operation, bit 8 is set to a space (0) for transmitted characters, and is ignored for all characters received.

### 2.6.9.6 Character Set

The **ADM 36** contains eight different character sets that can be selected by the user. The following character sets may be selected:

US ASCII
GERMAN
FRENCH
SPANISH
S/F (Swedish/Finnish)
DK/N (Danish/Norwegian)
UK ASCII
ITALIAN

### 2.6.9.7 Characters/Row

The Characters/Row feature allows the user to display either 80 or 132 characters per line.

**Note**

*If the "80/132 CLEARS SCREEN" feature is enabled (on), the screen will clear and the current contents lost when the characters are changed from 80 to 132 or from 132 to 80 per row.*

### 2.6.9.8 Cursor Mode

The Cursor mode feature allows the cursor to be displayed either as a blinking block ( ▮ ) or a blinking underline (_). The cursor represents the "active position" on the display screen, and indicates where the next character will be placed on the screen.

### 2.6.9.9 Flag

The Flag value is a number (0 through 15) that is transmitted in the <FLAGS> field of the report terminal parameters sequence. (See "Report Terminal Parameters" LSI REPT PARA in **Section 3**.) The host computer may, or may not use this parameter; it has no significance to the **ADM 36**.

### 2.6.9.10 Keyboard Type

The Keyboard Type feature indicates to the **ADM 36** what type of keyboard will be used. The **ADM 36** can be set for QWERTY, QWERTZ, AZERTY, or CUSTOM (user-defined custom keyboard layout) keyboard types. (See **figure 1-3** for an illustration of the keyboard types.) Note that if the "AZERTY" type keyboard is selected, the top row of keys (numerics and punctuation) will be inverted, i.e. The shift key must be pressed to produce numerals or change options in SET-UP mode.

### 2.6.9.11 Keyclick

The Keyclick feature is used to turn a keyclick tone on or off. If the feature is on, a tone is generated each time a key on the keyboard is pressed.

### 2.6.9.12 Line Frequency

The Line Frequency feature is used to select a power line frequency of 50 or 60 Hertz. This feature makes the **ADM 36** compatible with different power line frequencies.

### 2.6.9.13 Line Mode

The Line mode feature places the terminal in either the ON-LINE or LOCAL (off-line) mode. When the ON-LINE mode is selected the ON/OFF LINE indicator light is illuminated, all messages from the computer are displayed on the screen, and all characters entered on the keyboard are sent to the computer. (Characters will be displayed only if echoed from the host, or if "Local Echo" is set to "ON".) When the OFF-LINE mode is selected the ON/OFF LINE indicator light is extinguished, messages are not sent or received from the computer, and all characters entered on the keyboard are displayed on the screen only.

### 2.6.9.14 Local Echo

The Local Echo feature, when selected, is used to cause data entered on the keyboard to be transmitted and sent to the display when the **ADM 36** is on-line. Although this is similar to half-duplex operation, there is no line turnaround protocol involved and the communications port still operates in a full-duplex mode.

### 2.6.9.15 Modem Control Mode

The optional Integral Modem is controlled through this Set-Up mode feature, when the modem is installed. If no modem is installed in the **ADM 36** this selection will have no effect. The following states of modem operation may be selected:

OFF Normal terminal operation, the modem is disconnected from the terminal control logic.

MODEM Connects the modem to the terminal control logic with the modem in it's idle state.

DIG LP BK Causes the modem to perform the Digital Loopback test operation.

ANA LP BK Causes the modem to perform the Analog Loopback test operation.

Details of the integral modem operation and test procedures are contained in the "Integral Modem Users Reference Manual.

### 2.6.9.16 Margin Bell

The Margin Bell feature sounds a tone when the cursor is eight characters from the end of the current line. This operates in the same way as a typewriter.

### 2.6.9.17 New Line

The New Line feature (when on) enables the RETURN key to generate a carriage return (CR) and a line feed (LF) code when pressed. The LINE FEED key also generates a line feed and a carriage return code when pressed.

### 2.6.9.18 Parity

When the Parity feature is enabled, received data is checked for transmission errors. If a transmission error is detected, the ADM 36 indicates the error by displaying a checkerboard character (▒) in place of the erroneous character. On transmission a parity bit is added to the 7- or 8-bit character. If the Parity feature is disabled, no parity bit is transmitted or received.

### 2.6.9.19 Parity Sense

The Parity Sense feature determines odd or even parity used by the ADM 36 for parity checking. When the Parity features is on the ADM 36's parity must match the parity the computer is sending. If it does not match, most of the characters sent to the computer will be rejected even if the ADM 36 receives them correctly. If a parity error occurs, a checkerboard character (▒) is displayed in place of the received character on the screen.

### 2.6.9.20 Printer Baud Rate

The Baud Rate feature is used for the selection of the transmit speed to the printer. The ADM 36 will transmit at any of the following preselected baud rate speeds:

| | |
|---|---|
| 50 | 1200 |
| 75 | 1800 |
| 110 | 2000 |
| 134.5 | 2400 |
| 150 | 3600 |
| 200 | 4800 |
| 300 | 9600 |
| 600 | 19200 |

### 2.6.9.21 Printer Bits Character

The Printer Bits/Character feature allows the ADM 36 to transmit either 7- or 8-bit characters to the printer. When the 8-bit operation is selected, bit 8 is set to a space (0) for transmission of characters.

### 2.6.9.22 Printer Handshake

The printer handshake is a means for the printer to indicate to the terminal its status–busy or ready to accept data. The terminal will stop transmitting data when the printer sends an X-OFF code or makes the Busy (RTS) level true at the interface. Transmission resumes when the printer transmits an X-ON code or makes the Busy (RTS) level false.

### 2.6.9.23 Printer Parity

When the Printer Parity feature is enabled (on) a parity bit will be added to the 7- or 8-bit character. If the Printer Parity feature is disabled (off) no parity bit is transmitted.

### 2.6.9.24 Printer Parity Sense

The Printer Parity Sense feature determins odd or even parity used for the printer.

### 2.6.9.25 Printer Stop Bits

The Printer Stop Bits feature determines if one or two stop bits per character is transmitted to the printer.

### 2.6.9.26 Print Extent

The Print Extent feature determines if the full screen or partial screen contents are printed. The partial screen print is determined by the scrolling region selected by the host computer (see "Set Top and Bottom Margins - LSISTBM", in **Section 3** for an explanation of the scrolling region).

**Note**

*A screen is printed by pressing the SHIFT and ENTER keys simultaneously, as explained in "Keyboard Controls" in* **Section 3**.

### 2.6.9.27 Print Terminator

When the Print Terminator feature is set to Form-Feed, a form-feed character (FF) is added at the end of the Print Screen sequence.

### 2.6.9.28 Receive Baud Rate

The Receive Baud Rate feature sets the receive speed to match the computer transmit speed. The **ADM 36** will receive at any of the following baud rates:

| | |
|---|---|
| 50 | 1200 |
| 75 | 1800 |
| 110 | 2000 |
| 134.5 | 2400 |
| 150 | 3600 |
| 200 | 4800 |
| 300 | 9600 |
| 600 | 19200 |

### 2.6.9.29 Scroll Mode

The Scroll Mode feature allows you to set the upward or downward movement of existing lines on a display screen to a Jump scroll or Smooth scroll mode. The Jump scroll mode displays new lines as fast as the computer can transmit them. Lines in the Jump mode are sometimes difficult to read if the baud rate speed is high. The Smooth scroll displays new lines of data at a slower rate so they can be read easily.

**Note**

*The AUTO X-ON/X-OFF feature should be enabled and supported by the host computer software to ensure that data is not lost when the Smooth scroll mode is enabled. If the AUTO X-ON/X-OFF is disabled (off) the* **ADM 36** *will switch to the Jump scroll mode 64 characters before the end of the buffer to avoid losing data.*

### 2.6.9.30 Stop Bits

The Stop Bits features determines if one or two stop bits per character is used by the **ADM 36**. (If the baud rate is 300 or lower, 2 should be selected.)

### 2.6.9.31 Terminal Mode

The Terminal Mode feature sets the **ADM 36** to work in the American National Standards Institute (ANSI) mode or a VT52 Compatible mode. When the ANSI mode is selected, the **ADM 36** will generate and respond to code sequences compatible with ANSI X3.41-7974 and the ANSI X3.64-1979 standards.

### 2.6.9.32 Transmit Baud Rate

The Transmit Baud Rate feature selects the transmit speed of data to the host computer. The transmit speed must match the host computer receive speed. The **ADM 36** will transmit at any of the following baud rates.

| | |
|---|---|
| 50 | 1200 |
| 75 | 1800 |
| 110 | 2000 |
| 134.5 | 2400 |
| 150 | 3600 |
| 200 | 4800 |
| 300 | 9600 |
| 600 | 19200 |

### 2.6.9.33 Wrap-Around

When the Wrap-Around feature is enabled (on) the 81st or 133rd character (depending on the characters per row selected) is automatically placed on the first character position of the next line. If the Wrap-Around feature is disabled (off) the 81st or 133rd character and all following characters will be

overwritten into the last character position of the current line until the RETURN key is pressed.

### 2.6.9.34 80/132 Clear Page

When the 80/132 Clear Page feature is enabled (on) the terminal screen will automatically clear when the characters are changed from 80 to 132 or from 132 to 80 characters per line.

### 2.6.10 Self-Test Mode

A Self-Test mode is built into the ADM 36 that automatically, or on command, tests the condition of the terminal, should a fault be detected. The Self-Test program checks the following items:

Video Memory
Nonvolatile Memory (NVR)
Internal Memory (ROM and RAM)
Keyboard

This test is performed automatically when the terminal is turned on.

### 2.6.10.1 Self-Test Error Messages

There are two categories of errors detected in the self-test mode for the terminal, fatal and nonfatal. Fatal errors cause the terminal to immediately stop all operations. No intelligible information is displayed on the screen; usually the screen contains a random pattern of characters. The only indication of a fatal error is the random pattern of characters on the screen, or a possible error code displayed on the programmable keyboard indicator lights. (L1-L4).

Nonfatal errors do not halt the terminal processor. Instead the terminal is switched to LOCAL mode and indicators L1, L2 and/or L3 will illuminate to indicate the possible error condition as follows:

L1 = Memory (ROM) error
L2 = Memory (RAM) error
L3 = Display memory error
Long tone = Non-volatile error (NVR) error
Short tone = Successful self-test

### 2.6.11 Problem Checklist

If there is a problem with your terminal, you should initiate the power-up self-test program. The self-test will help determine if the problem is in the terminal or some other part of the computer system. **Table 2-3** is a problem checklist that should be performed before requesting a service call.

### 2.6.12 Strapping Options

The following chart details the strapping options available for installation of the ADM 36. The ADM 36 uses on-board ROM, therefore it is not necessary for the user to set or change jumpers or straps for normal operation.

AS SHIPPED:

| | | |
|---|---|---|
| E1 | - | 1-2<br>3-4<br>5-6<br>7-8<br>9-10 |
| E2 | - | 2-4 |
| E3 | - | 1-2<br>5-6<br>9-10<br>13-14<br>15-16 |
| E4 | - | 3-4 |
| E5 | - | 3-4 |
| E6 | - | 3-4 |
| E7 | - | 3-4 |
| E8 | - | 3-4 |
| E9 | - | 1-3 |
| E10 | - | 1-2 |
| E11 | - | 3-4 |

| SYMPTOM | POSSIBLE CAUSE AND CORRECTIVE ACTION |
|---|---|
| Terminal will not turn ON when the power switch is set to ON. | AC power cord is not plugged into wall outlet; plug in cord.<br><br>Power is not coming from the wall outlet; check outlet with a known working electrical device (such as a lamp). If no power, call your electrician.<br><br>AC line fuse blown; turn terminal OFF and have the fuse replaced. |
| No keyboard response | Keyboard cable not plugged in; plug-in keyboard cable.<br><br>KBD LOCKED indicator on; computer has turned the keyboard off. The KBD LOCKED conditions may be cleared by entering and exiting the SET-UP mode. If this condition persists, check with the host computer software personnel for a possible operating error.<br><br>Perform the self-test operation. |
| Garbled or Error (▒) Characters | Incorrect SET-UP feature selection; correct the SET-UP features. Suggested SET-UP features which may be in error:<br><br>ANSI/VT-52 — Parity Sense<br>AUTO X-ON/X-OFF — Receiver Speed<br>Bits/Character Parity — Transmit Speed<br><br>Perform the self-test operation. |
| Several Successive Long Tones | The terminal has had difficulty in reading or writing the SET-UP features stored in non-volatile memory. Check the feature settings and perform the save operation.<br><br>Perform the self-test operation. |

**Table 2-3. Problem Cheklist**

## 2.7 INTERFACE INFORMATION

The ADM 36 may be cabled directly to a local computer, serial printer, or other auxiliary device; or it may be connected via telephone data lines to a remote computer located anywhere in the world. Remote computer connections require the use of a modem or data set **figure 2-6** shows a typical ADM 36 application, while **figure 2-7** shows the rear panel location of the interface connectors.

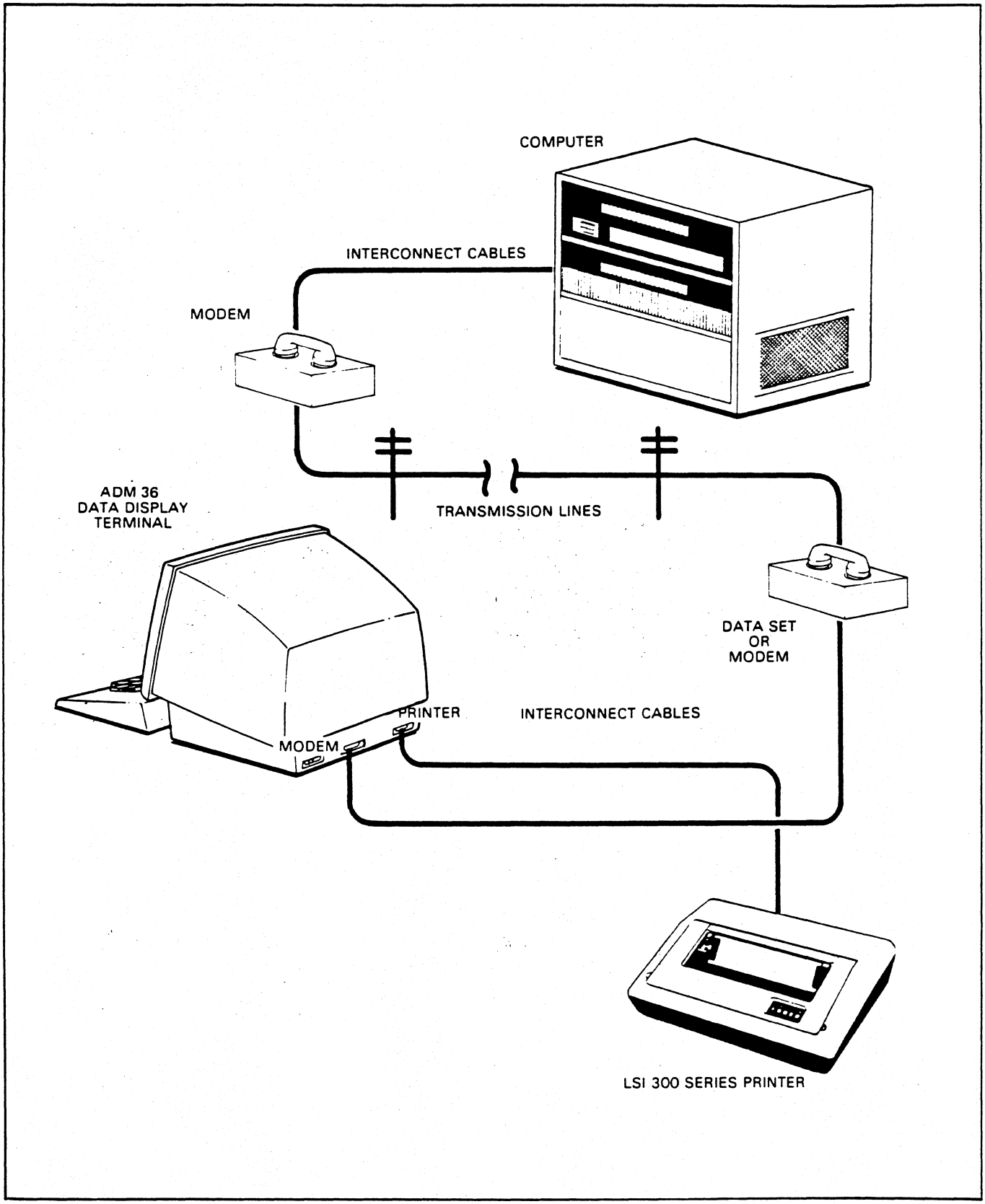


*Figure 2-6. Typical ADM 36 Applications*

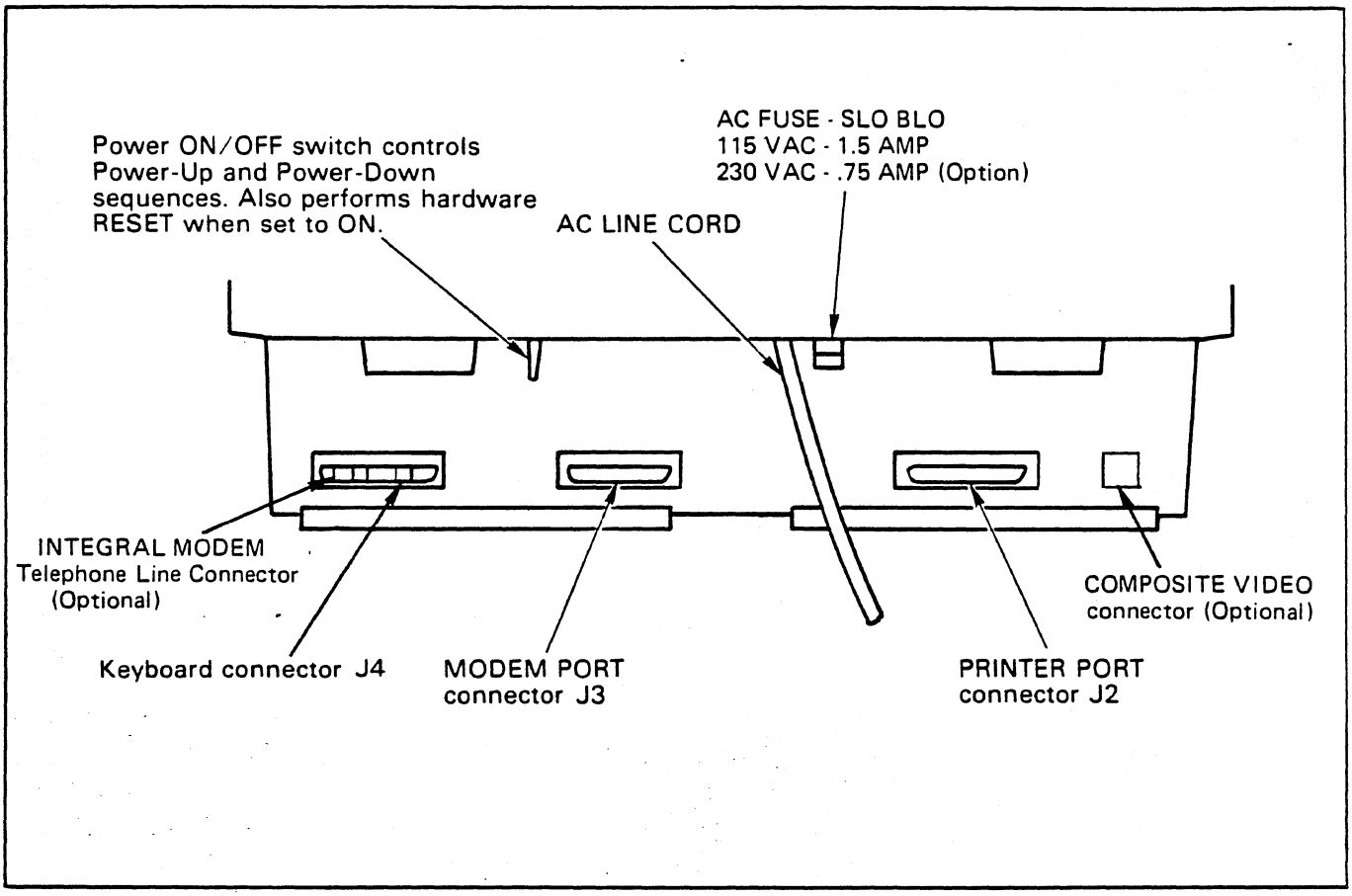


*Figure 2-7. ADM 36 Panel Controls*

## 2.7.1 RS-232C (Modem) Interface

The RS-232C Modem Interface allows the **ADM 36** to be connected directly to a host or a modem utilizing RS-232C signal levels. **Figure 2-8** depicts the pins and associated signal names from the RS-232C standard that are used in the **ADM 36**. Note that the modem connector is also used for RS-422A and 20mA current loop interfacing. Thus only the signals indicated should be used. Modem cables using all 25 pins may cause invalid signals to be present at the connecting devices.

## 2.7.2 RS-422A (Modem) Interface

The RS-422A Interface allows the **ADM 36** to be connected to a device using the differential line levels associated with RS-422A standard. Refer to **figure 2-9** for details on which pins of the modem connector the RS-422A signals are assigned. Damage may result if RS-232C level signals are connected to RS-422A devices.

## 2.7.3 20mA Current Loop (Modem) Interface

The **ADM 36** Modem connector also provides the ability to interface to a host using 20mA current loop levels. **Figure 2-10** illustrates the transmit and receive pairs associated with current loop operation. The current loop is always passive at the **ADM 36**.

## 2.7.4 Printer Port Interface

The PRINTER port is used for connecting a serial printer to the terminal. **Figure 2-11** shows the logic associated with the Printer interface. Refer to SET-UP mode for the settings of the features which enable the PRINTER port and establish the RTS or X-ON/X-OFF signal characteristics appropriate for the printer in use.

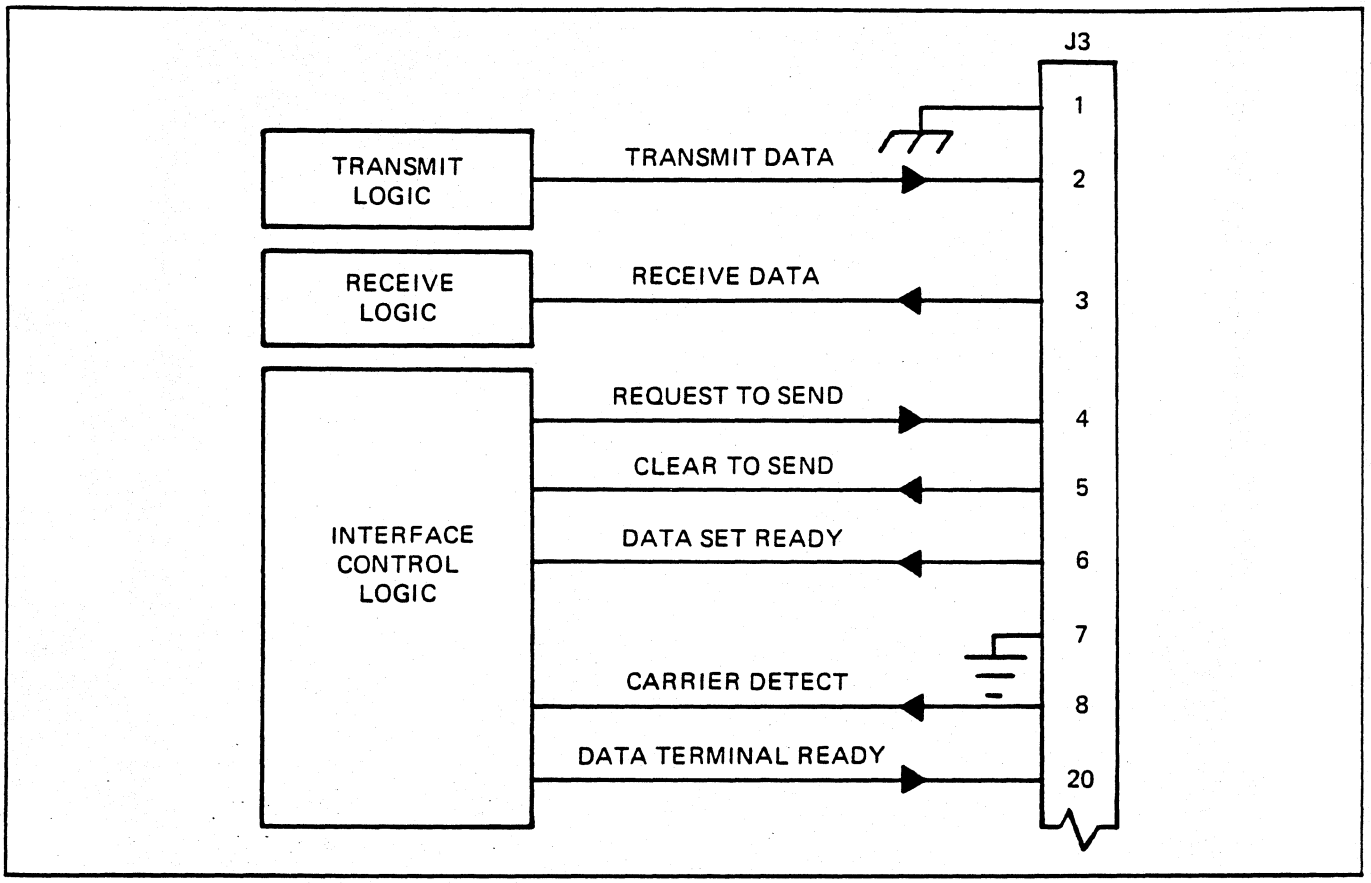


*Figure 2-8. RS-232C (Modem) Interface Logic*

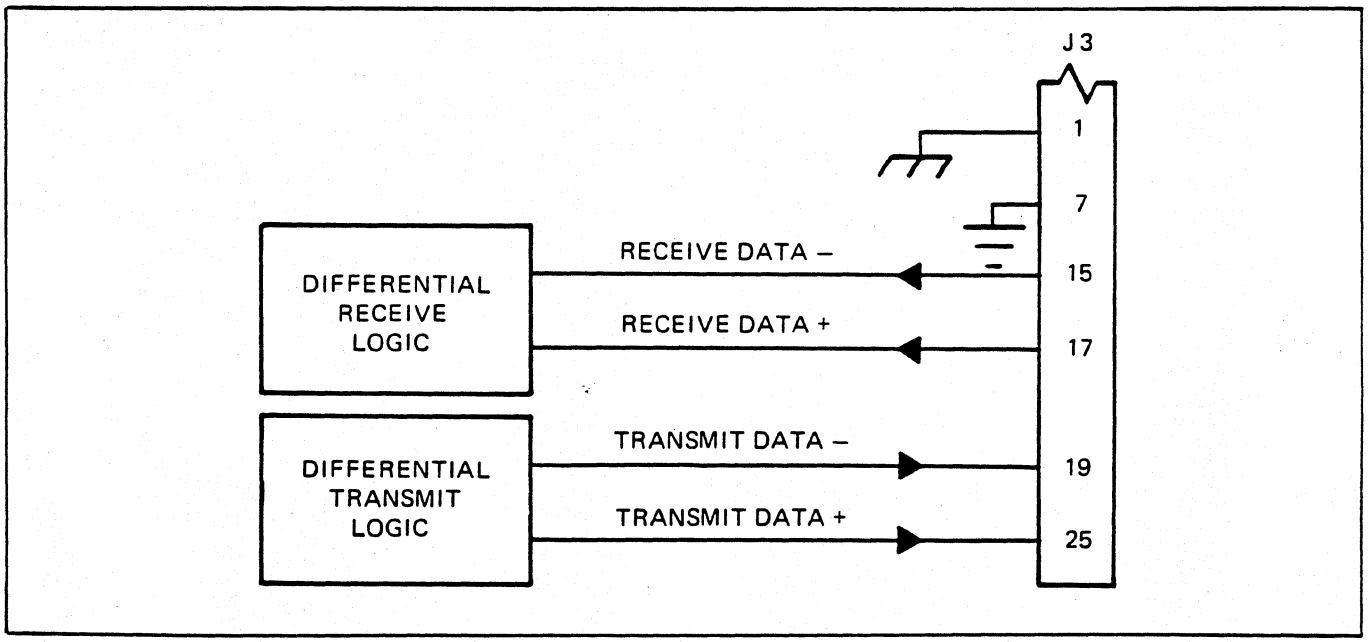


*Figure 2-9. RS-422A (Modem) Interface Logic*

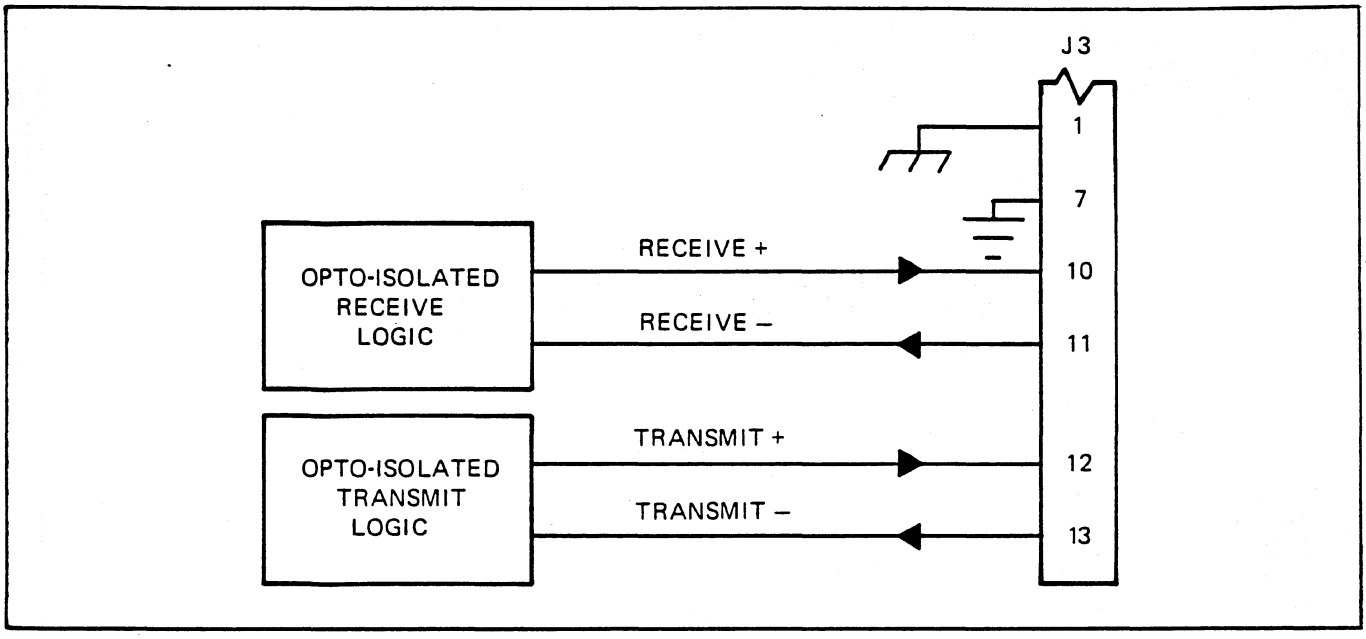


*Figure 2-10. 20mA Current Loop (Modem) Interface Logic*

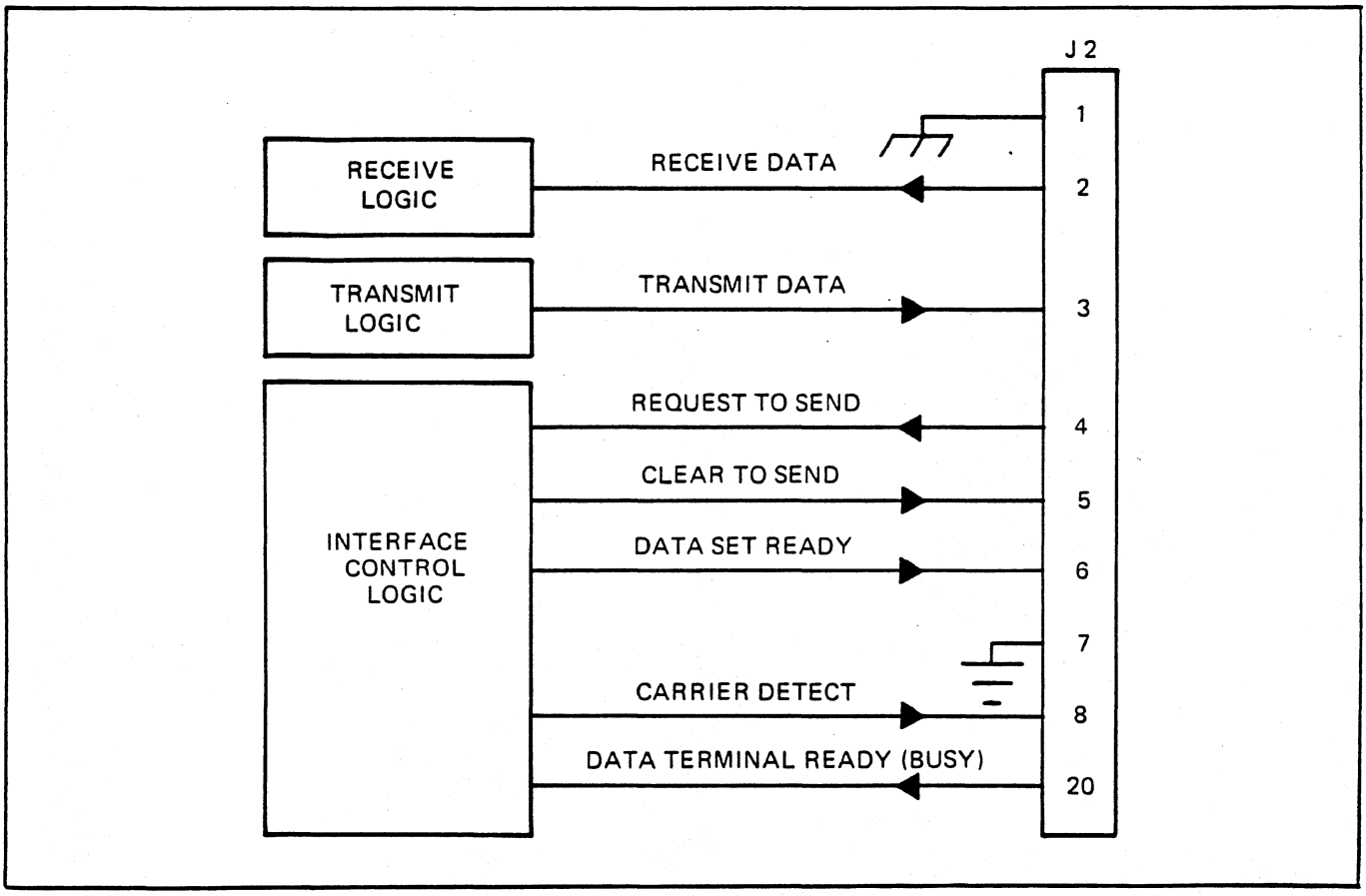


*Figure 2-11. Printer Interface Logic (RS-232C)*

## 2.8 INSTALLING THE ADM 36

1. Check the ON/OFF switch (**figure 2-7**) to ensure that it is set to OFF.
2. Connect the data interface cable(s) to the terminal using the appropriate interface information (**paragraph 2.7**).
3. Plug the power cord into a grounded AC outlet of the proper voltage (refer to **paragraph 2.5**).
4. Turn on the terminal.
5. Verify that all operating parameters specified in SET-UP mode (**paragraph 2.6**) are set correctly.

## 2.9 POWER TURN-ON

1. Set the ON/OFF switch to ON. (See **figure 2-7**.)
2. Wait approximately 20 seconds for the unit to warm up. The **ADM 36** will beep twice to indicate no errors on power-up self-test.

**CAUTION**

*To avoid damage to the CRT screen when the terminal is to remain ON but unchanged for extended periods of time, reduce the screen brightness.*

3. Adjust BRIGHTNESS (**SET-UP** mode, **paragraph 2.6.1**) for desired display brightness.
4. If the cursor does not appear or if an error indication appears, refer to the self-test instructions and problems checklist in **paragraphs 2.6.10** and **2.6.11**.
5. If the display still does not appear, trouble-shoot the CRT monitor, then the terminal electronics, if necessary.

## 2.10 POWER TURN-OFF

Refer to **figure 2-7** and proceed as follows:

1. If the unit contains information which must be retained, be sure to transmit this information to host immediately. This is necessary, as display memory is cleared when power is removed from the unit. An alternative is to send the information to a printer prior to turning OFF unit.
2. Turn off the **ADM 36** by setting ON/OFF switch to OFF.

## 2.11 CARE OF THE ADM 36

Proper care of the **ADM 36** consists of performing the routine cleaning and inspection procedures listed in the following paragraphs.

### 2.11.1 Cleaning

At period intervals, clean the exterior housing and lightly dust the unit using a soft brush or damp lint-free cloth. However, paper towels may be substituted if desired. Do not use petroleum base cleaners, such as lighter fluid, as this could be harmful to the painted surface. Remove smudges from the CRT exterior screen and the housing with conventional spray cleaners or alcohol. Be careful not to scratch the CRT screen.

### 2.11.2 Inspection

Periodically, inspect the keyboard assembly for freedom of movement. Determine that the intensity of character traced on the CRT screen has not diminished. Any required mechanical and electrical adjustment shall only be performed by an authorized Lear Siegler service representative.

# SECTION III
# OPERATION

## 3.1 INTRODUCTION

This section provides the information necessary for the operator to utilize the **ADM 36** to its fullest capabilities. The section emphasizes the control codes required to initiate and control various terminal operations, whether originating at the host or the unit keyboard. It is assumed that the operator is thoroughly familiar with keyboard operations that are discussed in the paragraphs which follow.

## 3.2 KEYBOARD

The **ADM 36** Keyboard is designed as shown in **figure 3-1**. The keyboard is similar to a standard office typewriter with additional keys and indicator lights. The additional keys and indicator lights are used to generate control sequences, cursor control commands, and to show terminal status.

The keyboard is used to transmit ASCII codes to the host computer by entering specific keys or a combination of keys. Some keys transmit one or more codes to the host as soon as the keys are pressed. The CTRL (control) and SHIFT keys do not transmit codes. However, they modify codes transmitted by other keys when pressed with another key. When a key is pressed that transmits a code, the terminal makes a clicking shound to verify to the operator that the key was processed by the terminal. If more than one key that transmits codes are pressed together, the two codes will be transmitted in the order in which they were typed. This protection against overtyping is provided by the 3-key rollover feature of the keyboard.

The following pages discuss the keys on the keyboard, codes generated by there keys, and the different character sets that may be selected by the **ADM 36**.

### 3.2.1 Auto Repeating Keys

All keys will automatically repeat when pressed and held down for more than 1/2 second, with the exception of the SET-UP, ESC, NO SCROLL, TAB, RETURN, and any key pressed simultaneously with the CTRL key. When an auto repeat key is pressed, the code is transmitted immediately. If the key is held for more than 1/2 second, the code(s) is transmitted repeatedly at the rate of approximately 30 CPS (or less than 30 CPS if a low transmit baud rate is used) until the key is released.

### 3.2.2 Alphabetic Keys

The **ADM 36** transmits the lowercase code for alphabetic keys unless one or both of the SHIFT keys are pressed, or the CAPS LOCK key is pressed. If the SHIFT or CAPS LOCK key is pressed the uppercase (shifted) code is transmitted. The CAPS LOCK keys locks only the 26 alphabetic keys in the uppercase mode. See **Table 3-1** for the codes generated by the alphabetic keys; the codes are also listed in **Appendix A** for quick reference.

#### 3.2.2.1 Caps Lock Key

The CAPS LOCK key, when pressed, locks only the 26 alphabetical keys in the shifted mode and enables the transmission of uppercase characters only. All numeric and special symbol keys remain in lowercase. Press again to unlock the key.

#### 3.2.2.2 Shift Key

The SHIFT key places in the keyboard in an uppercase mode and enables the uppercase function on all keys. If a key does not have an uppercase function, the SHIFT key is disregarded.

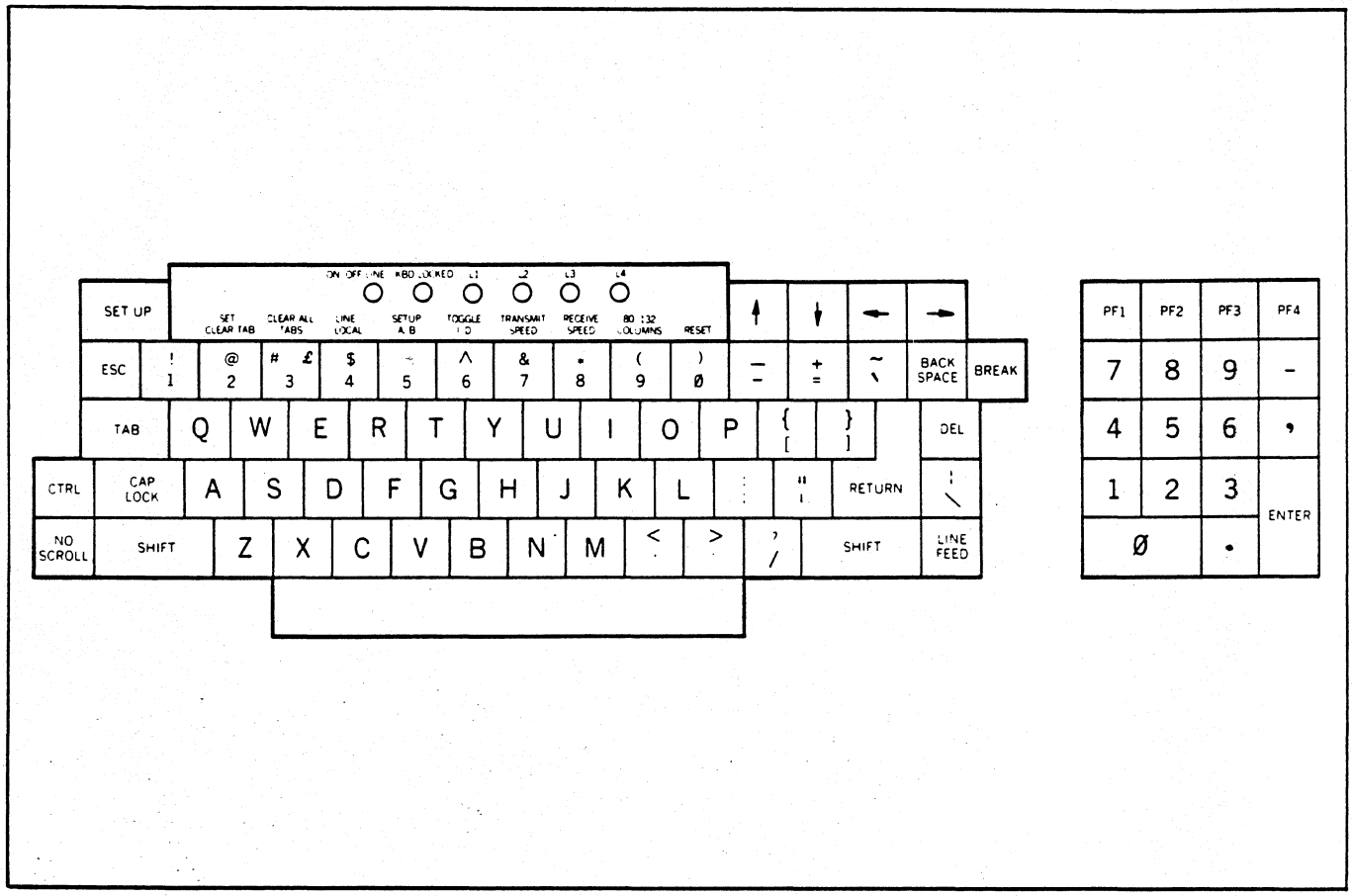


*Figure 3-1. ADM 36 Keyboard.*

## 3.2.3 Numeric And Special Character Keys

The **ADM 36** transmits the lowercase code of the numeric and special character keys unless the one of the SHIFT keys is pressed. If the SHIFT key is pressed the uppercase code is transmitted. The CAPS LOCK key does not affect the numeric or special character keys. See **Table 3-2** for the codes generated by the numeric and special character keys; the codes are also listed in **Appendix A** for quick reference.

## 3.2.4 Special Control

The Special Control keys transmit control codes to the host computer from the **ADM 36**. The special control keys and their codes are listed in **Table 3-3** (codes are also listed in **Appendix A** for quick reference).

### 3.2.4.1 Backspace Key

The backspace key transmits a backspace code.

### 3.2.4.2 Delete Key

The DELETE key transmits a delete character code to the host device. The deleted character may or may not be erased from the display screen.

### 3.2.4.3 ESC Key

The ESC (escape) key transmits a code which has a special meaning as specified by your system. In most applications the ESC key tells the system to treat the next key(s) pressed as a command.

### 3.2.4.4 Linefeed Key

The LINE FEED key transmits a line feed code to the system.

## Table 3-1. Alphabetic Key Codes.

| KEY | UPPERCASE KEY CODE GENERATED (HEX) | LOWERCASE KEY CODE GENERATED (HEX) |
|---|---|---|
| A | 41 | 61 |
| B | 42 | 62 |
| C | 43 | 63 |
| D | 44 | 64 |
| E | 45 | 65 |
| F | 46 | 66 |
| G | 47 | 67 |
| H | 48 | 68 |
| I | 49 | 69 |
| J | 4A | 6A |
| K | 4B | 6B |
| L | 4C | 6C |
| M | 4D | 6D |
| N | 4E | 6E |
| O | 4F | 6F |
| P | 50 | 70 |
| Q | 51 | 71 |
| R | 52 | 72 |
| S | 53 | 73 |
| T | 54 | 74 |
| U | 55 | 75 |
| V | 56 | 76 |
| W | 57 | 77 |
| X | 58 | 78 |
| Y | 59 | 79 |
| Z | 5A | 7A |

## Table 3-2. Numeric and Special Character Codes.

| LOWERCASE KEY | CODE GENERATED (HEX) | UPPERCASE KEY (SHIFTED) | CODE GENERATED (HEX) |
|---|---|---|---|
| 1 | 31 | ! | 21 |
| 2 | 32 | @ | 40 |
| 3 | 33 | # or £ | 23 |
| 4 | 34 | $ | 24 |
| 5 | 35 | % | 25 |
| 6 | 36 | ^ | 5E |
| 7 | 37 | & | 26 |
| 8 | 38 | * | 2A |
| 9 | 39 | ( | 28 |
| 0 | 30 | ) | 29 |
| - (hyphen) | 2D | _ (underscore) | 5F |
| = | 3D | + | 2B |
| [ | 5B | { | 7B |
| ; | 3B | : | 3A |
| ' (apostrophe) | 27 | " | 22 |
| , (comma) | 2C | < | 3C |
| / | 2F | ? | 3F |
| \ | 5C | \| | 7C |
| ` (grave) | 60 | ~ | 7E |
| ] | 5D | } | 7D |

**Table 3-3. Special Control Key Codes.**

| SPECIAL CONTROL KEY | CODE GENERATED BY TERMINAL (HEX) | TERMINAL ACTION IF HOST SENT CODE | COMMENTS |
|---|---|---|---|
| BACKSPACE | 08 | Backspace one character | Transmits a backspace code. |
| DELETE | 7F | Ignored | Transmits a delete character code to the host device. The deleted character may or may not be erased from the display screen. |
| ESC | 1B | Initial delimiter of an escape sequence - interpret the following character string from the host as a command, rather than displaying on | Transmits a code which has a special meaning as specified by your system. In most applications the ESC key tells the system to treat the next key(s) pressed as a command. |
| LINEFEED | 0A | Line Feed | Transmits a line feed code to the system. |
| RETURN* | 0D | Carriage Return | Transmits either a carriage return (CR) code or a carriage return and a line feed (LF) code. |
| SPACE BAR | 20 | Enter a space on the display screen, erase what was there before. | Moves the cursor on character position to the right, and enters a space on the display screen. |
| TAB | 09 | Tab (one tap stop) | Transmits a tab code to the system. |

*The RETURN key can be redefined in the SET-UP Mode, See "New Line" in SET-UP FEATURES, Section 2 for the information to redefine the RETURN key.

### 3.2.4.5 Return Key

The RETURN key transmits either a carriage return (CR) code or a carriage return and a line feed (LF) code. This function is selected in the SET-UP mode.

### 3.2.4.6 Space Bar

The Space Bar moves the cursor one character position to the right, and enters a space on the display screen.

### 3.2.4.7 Tab Key

The TAB key transmits a tab code to the system.

**Table 3-4. Cursor control key code sequences.**

| CURSOR KEY | VT-52 MODE | ANSI MODE (CURSOR KEY MODE RESET*) | ANSI MODE (CURSOR KEY MODE SET*) |
|---|---|---|---|
| ↑ (up) | ESC A | ESC [ A | ESC O A |
| ↓ (down) | ESC B | ESC [ B | ESC O B |
| → (right) | ESC C | ESC [ C | ESC O C |
| ← (left) | ESC D | ESC [ D | ESC O D |

*See "Control Sequences" this section for a detailed explanation of these modes.

## 3.2.5 Cursor Control Keys

The Cursor Control keys (↑, ↓, →, ←) transmits control sequences to the host computer. The control sequences generated by the cursor control keys are shown in **Table 3-4.**

## 3.2.6 Special Function Keys

The Special Function keys provide unique operations to the terminal. Some of the special functions are dependent on the host system software, and may or may not be used. The following paragraphs explain the special function keys.

### 3.2.6.1 Break Key

When the BREAK key is pressed the transmission line is forced to its zero state for .250 seconds ±10 percent.

SHIFT And BREAK Key

If the SHIFT key is pressed with the BREAK key, the time for the zero state is increased to 3.5 seconds ±10 percent and the data terminal ready (DTR) is de-asserted (off). After the 3.5 second break, the data terminal ready is asserted (on). Pressing the SHIFT and BREAK keys provides the long-break-disconnect function. A modem with RS-232-C levels can be configured to cause the local and remote data sets to disconnect with the long-break-disconnect function. A modem connected via the 20mA current loop may disconnect the remote data set only.

CONTROL And BREAK Key

Pressing the CTRL (control) and BREAK key together causes the transmission of the Answerback message. (See "Answerback" in the SET-UP Features, **Section 2**, for an explanation of the Answerback message.)

**Table 3-5. Control codes generated by the CTRL key in conjuction with another key.**

| CTRL KEY PRESSED WITH FOLLOWING KEY | CODE TRANSMITTED (HEX) | ASCII MNEMONIC |
|---|---|---|
| @ | 00 | NUL |
| A | 01 | SOH |
| B | 02 | STX |
| C | 03 | ETX |
| D | 04 | EOT |
| E | 05 | ENQ |
| F | 06 | ACK |
| G | 07 | BELL |
| H | 08 | BS |
| I | 09 | HT |
| J | 0A | LF |
| K | 0B | VT |
| L | 0C | FF |
| M | 0D | CR |
| N | 0E | SO |
| O | 0F | SI |
| P | 10 | DLE |
| Q | 11 | DCI (or XON) |
| R | 12 | DC2 |
| S | 13 | DC3 (or XOFF) |
| T | 14 | DC4 |
| U | 15 | NAK |
| V | 16 | SYN |
| W | 17 | ETB |
| X | 18 | CAN |
| Y | 19 | EM |
| Z | 1A | SUB |
| [ | 1B | ESC |
| \ | 1C | FS |
| ] | 1D | GS |
| ^ | 1E | RS |
| _ | 1F | US |

### 3.2.6.2 CTRL (Control) Key

The CTRL (control) key is used to generate control codes when pressed in conjuction with other keys on the keyboard. The control codes generated and transmitted to the host are shown in **Table 3-5**; the control codes are also listed in **Appendix A** for quick reference.

### 3.2.6.3 ENTER Key

The ENTER key (by itself) transmits the same code as the RETURN key. (The RETURN key can transmit either a carriage return or a carriage return and line feed (LF) code, as defined in "New Line" in the SET-UP FEATURES, **Section 2**.)

**Table 3-6. SET-UP Features Changeable by the Host Computer.**

| SET-UP FEATURES OR TERMINAL STATE | CAN BE CHANGED FROM HOST COMPUTER | FEATURES IN NVR THAT CAN BE CHANGED IN SET-UP |
|---|---|---|
| Alternate Keypad Mode | yes (LSIKPAM/LSIKPNM) | no |
| ANSI/VT-52 Mode | yes (LSIANM) | yes |
| Auto Repeat | yes (LSIARM) | yes |
| Auto X-ON/X-OFF | no | yes |
| Bits Per Character | no | yes |
| Characters Per Row | yes (LSICOLM) | yes |
| Cursor | no | yes |
| Cursor Key Mode | yes (LSICKM) | no |
| Keyclick | no | yes |
| Local Echo | yes (SRM) | yes |
| Modem Mode | no | yes |
| Margin Bell | no | yes |
| New Line | yes (LMN) | yes |
| Origin Mode | yes (LSICOM) | no |
| Parity | no | yes |
| Parity Sense | no | yes |
| Power Frequency | no | yes |
| Receive Speed | no | yes |
| Screen | yes (LSISCMN) | yes |
| Scroll | yes (LSISCLM) | yes |
| Select Char. Set | yes (SCS) | yes |
| Tabs | yes (HTS/TBC) | yes |
| Transmit Speed | no | yes |
| Wrap-Around | yes (LSIAWM) | yes |

SHIFT and ENTER Keys

When the SHIFT and ENTER keys are pressed simultaneously, the contents of the screen will be output to the printer port. The output can be either full or partial screen contents according to the setting of the Print Extent feature (see "Print Extent" in the SET-UP FEATURES, **Section 2**). A form-feed (FF) character can be added to the end of the screen output if the Print Terminator feature is selected (see "Print Terminator" in SET-UP FEATURES, **Section 2**).

CONTROL and ENTER Keys

When the CTRL and ENTER keys are pressed simultaneously, line-at-a-time print mode is enabled. The screen will output a line at a time to the printer port whenever the cursor moves off the line. A subsequent CTRL-ENTER entry will disable the line-at-a-time printer mode.

### 3.2.6.4 NO SCROLL Key

If the NO SCROLL feature is enabled (in SET-UP and at the host), the NO SCROLL key may be used to temporarily inhibit the scrolling of data off the screen. When the NO SCROLL key is pressed, an X-OFF character is sent to the host. The host should respond by suspending transmission to the terminal. When NO SCROLL is pressed again, an X-ON is sent to the host. The host may then resume transmission. (See "NO SCROLL" in **SET-UP FEATURES**, in **Section 2**). If the Auto X-ON/X-OFF feature is disabled, the NO SCROLL key has no effect upon the host, and will not transmit X-ON/X-OFF.

**Table 3-7. Numeric Keypad Codes.**

| KEY | VT-52/KEYPAD NUMERIC MODE | VT-52/ APPLICATION MODE | ANSI KEYPAD NUMERIC MODE | ANSI APPLICATION MODE |
|---|---|---|---|---|
| 0 | 0 | ESC ? p | 0 | ESC O p |
| 1 | 1 | ESC ? q | 1 | ESC O q |
| 2 | 2 | ESC ? r | 2 | ESC O r |
| 3 | 3 | ESC ? s | 3 | ESC O s |
| 4 | 4 | ESC ? t | 4 | ESC O t |
| 5 | 5 | ESC ? u | 5 | ESC O u |
| 6 | 6 | ESC ? v | 6 | ESC O v |
| 7 | 7 | ESC ? w | 7 | ESC O w |
| 8 | 8 | ESC ? x | 8 | ESC O x |
| 9 | 9 | ESC ? y | 9 | ESC O y |
| - | - (minus) | ESC ? m | - (minus) | ESC O m |
| , | , (comma) | ESC ? l* | , (comma) | ESC O l* |
| ENTER | Same as RETURN key | ESC ? M | Same as RETURN key | ESC O M |
| PF1 | ESC P | ESC P | ESC O P | ESC O P |
| PF2 | ESC Q | ESC Q | ESC O Q | ESC O Q |
| PF3 | ESC R | ESC R | ESC O R | ESC O R |
| PF4 | ESC S | ESC S | ESC O S | ESC O S |

*Lower-case "L" character (l)

### 3.2.6.5 SET-UP Key

The SET-UP key is pressed to place the terminal in the SET-UP mode, or to take the terminal out of the SET-UP mode. The SET-UP features are explained in detail in "SET-UP Mode", **Section 2**. The SET-UP features which may be changed by the host computer are listed in **Table 3-6**, and are explained in "Control Sequences", this section.

## 3.2.7 Numeric (Auxiliary) Keypad

The keys on the numeric keypad may transmit the same codes as the associated keys on the keyboard (numerals, minus sign, and comma). The ENTER key on the numeric keypad transmits the same code as the RETURN key on the keyboard.

The numeric keypad can also be used to transmit control sequences to the host to enable user-defined functions by placing the terminal in Keypad Application Mode. The Keypad Application Mode is determined by a command from the host.

The keys on the numeric keypad transmit one of four combinations of codes. **Table 3-7**

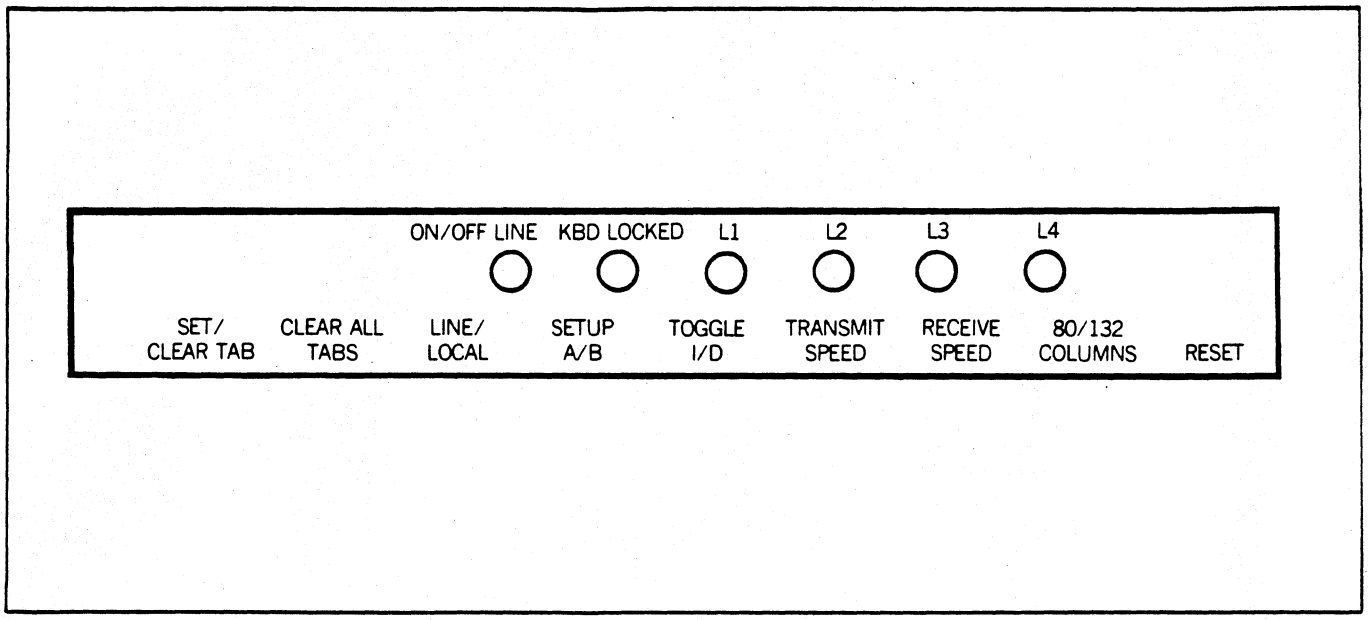


*Figure 3-2. ADM 36 Indicator Lights*

listed the keypad keys, the possible modes, and the control sequence generated for each key.

### 3.2.8 Indicator Lights

The indicator lights are located at the top left-hand corner of the keyboard. Two indicator lights inform the operator of special operating conditions (on-line/local, keyboard locked) and the remaining lights can be user-programmed for special application needs.

#### 3.2.8.1 ON/OFF Line Indicator Light

The ON/OFF LINE indicator light is illuminated when the terminal is on-line and ready to transmit or receive messages from the host device. When the ON/OFF LINE indicator light is not illuminated, the terminal is off-line (local mode) and cannot communicate with the host device. In LOCAL mode the keyboard remains active and all characters typed are placed on the screen.

#### 3.2.8.2 KBD Locked Light

The KBD (keyboard) locked light is illuminated when the keyboard has been turned off, but the terminal is still able to receive data from the host computer. The keyboard locked condition can be cleared by entering and exiting the SET-UP mode.

#### 3.2.8.3 L1-L4 Indicator Lights

The L1, L2, L3, and L4 indicator lights are turned on or off by the host device, and are user-programmable for special application needs. These lights are also used to show self-test errors.

## 3.3 SPECIAL GRAPHICS AND CHARACTER SETS

The ADM 36 offers special graphics and European character sets, as detailed in the following paragraphs.

### 3.3.1 Special and Wide Point Graphics Character Sets

The ADM 36 offers special graphics character sets that replace the characters normally typed on an USASCII or UKASCII keyboard (codes 5F through 7E hex) with special graphic characters. The special graphics character sets are: line graphics and wide-point. **Table 3-9** illustrates the hex code transmitted, the USASCII/UKASCII character, and the special graphics or wide point graphics character that replaces the USASCII/UKASCII character when selected.

### 3.3.2 European Character Sets

The **ADM 36** offers six European character sets along with USACII and UKASCII character sets. If one of the European character sets is selected, some characters normally typed on a USASCII or UKASCII keyboard are replaced with the selected European characters. **Table 3-8** illustrates the USASCII/UKASCII character and the selected European character that changes, and the hex code transmitted.

## 3.4 CONTROL FUNCTIONS

A control function is a single character or a string of characters used in the software to indicate actions that affect the recording, processing, transmitting, or representation of data from the host to the terminal. The two types of control functions are as follows:

Control Character

Control Sequence (either ANSI or VT-52)

The control characters and the ANSI and VT-52 control sequences are explained in the following paragraphs.

### 3.4.1 Control Character

The control character is a single character sent from the host to the terminal whose occurrence in a particular context initiates, modifies, or stops a control function. The control character causes the **ADM 36** to take an action, but does not display a character on the screen.

The control characters are specifically left out of the control sequence syntax, but may be embedded in a control sequence. The ability to embed control characters allows the synchronization characters X-ON and X-OFF

**Table 3-8. US/UKASCII and European Character Sets.**

| HEX CODE | US-ASCII | UK-ASCII | SPAIN | GERMANY | DENMARK NORWAY | FINLAND SWEDEN | FRANCE | ITALY |
|---|---|---|---|---|---|---|---|---|
| 23 | # | £ | # | # | # | # | £ | £ |
| 24 | $ | $ | $ | $ | $ | ¤ | $ | $ |
| 40 | @ | @ | @ | § | @ | É | à | § |
| 5B | [ | [ | [ | Ä | Æ | Ä | ° | ° |
| 5C | \ | \ | N | Ö | ø | Ö | ç | é |
| 5D | ] | ] | ] | Ü | Å | Å | § | ¦ |
| 5E | ^ | ^ | ^ | ^ | ^ | Ü | ^ | ^ |
| 60 | ` | ` | ` | ` | ` | e | ` | ù |
| 7B | { | { | { | ä | æ | ä | é | à |
| 7C | ¦ | ¦ | ñ | ö | ø | ö | ù | ò |
| 7D | } | } | } | ü | å | å | è | è |
| 7E | ~ | ~ | ~ | β | ~ | ü | ¨ | ì |

## Table 3-9. Special Graphics and Wide Point Graphics Character Sets

| Hex Code | USASCII | Wide Point Graphics | Line Graphics and VT52 Character Set |
|---|---|---|---|
| 5F | _ (underscore) | (Blank) | (Blank) |
| 60 | ` (Grave) | Horizontal line scan 9 and 10 | ◇ Diamond |
| 61 | a | Horizontal line scan 7 and 8 | ▒ Checkerboard |
| 62 | b | Horizontal line scan 7, 8, 9 and 10 | HT Horizontal Tab |
| 63 | c | Horizontal line scan 5 and 6 | FF Form feed |
| 64 | d | Horizontal line scan 5, 6, 9 and 10 | CR Carriage return |
| 65 | e | Horizontal line scan 5, 6, 7 and 8 | LF Line feed |
| 66 | f | Horizontal line scan 5, 6, 7, 8, 9 and 10 | ° Degree |
| 67 | g | Horizontal line scan 3 and 4 | ± Plus/minus |
| 68 | h | Horizontal line scan 3, 4, 9 and 10 | NL New line |
| 69 | i | Horizontal line scan 3, 4, 7 and 8 | VT Vertical tab |
| 6A | j | Horizontal line scan 3, 4, 7, 8, 9 and 10 | ┘ Lower right corner |
| 6B | k | Horizontal line scan 3, 4, 5 and 6 | ┐ Upper right corner |
| 6C | l | Horizontal line scan 3, 4, 5, 6, 9 and 10 | ┌ Upper left corner |
| 6D | m | Horizontal line scan 3, 4, 5, 6, 7, and 8 | └ Lower left corner |
| 6E | n | Horizontal line scan 3, 4, 5, 6, 7, 8, 9 and 10 | ┼ Crossing lines |

## Table 3-9. Special Graphics and Wide Point Graphics Character Sets (continued)

| Hex Code | USASCII | Wide Point Graphics | Line Graphics and VT52 Character Set |
|---|---|---|---|
| 6F | o | Horizontal line scan 1 and 2 | ⎺ Horizontal line scan 1 |
| 70 | p | Horizontal line scan 1, 2, 9 and 10 | ─ Horizontal line scan 3 |
| 71 | q | Horizontal line scan 1, 2, 7 and 8 | ─ Horizontal line scan 5 |
| 72 | r | Horizontal line scan 1, 2, 7, 8, 9 and 10 | ─ Horizontal line scan 7 |
| 73 | s | Horizontal line scan 1, 2, 5 and 6 | Horizontal line scan 9 |
| 74 | t | Horizontal line scan 1, 2, 5, 6, 9 and 10 | ├ Left " T " |
| 75 | u | Horizontal line scan 1, 2, 5, 6, 7 and 8 | ┤ Right "T " |
| 76 | v | Horizontal line scan 1, 2, 5, 6, 7, 8, 9 and 10 | ┴ Bottom " T " |
| 77 | w | Horizontal line scan 1, 2, 3 and 4 | ┬ Top " T " |
| 78 | x | Horizontal line scan 1, 2, 3, 4, 9 and 10 | │ Vertical bar |
| 79 | y | Horizontal line scan 1, 2, 3, 4, 7 and 8 | ≤ Less than or equal to |
| 7A | z | Horizontal line 1, 2, 3, 4, 7, 8, 9 and 10 | ≥ Greater than or equal to |
| 7B | { | Horizontal line scan 1, 2, 3, 4, 5 and 6 | π Pi |
| 7C | ¦ | Horizontal line scan 1, 2, 3, 4, 5, 6, 9 and 10 | ≠ Not equal to |
| 7D | } | Horizontal line scan 1, 2, 3, 4, 5, 6, 7 and 8 | £ UK pound sign |
| 7E | ~ | Horizontal line scan 1, 2, 3, 4, 5, 6, 7, 8, 9 and 10 | • Centered dot |

to be interpreted properly without affecting the control sequence.

Embedded control characters are executed as soon as they are encountered by the **ADM 36**; then processing of the control sequence continues with the next character received. The only exceptions to the continued processing is when ESC, CAN or SUB occurs. When an ESC (1B) occurs the current control sequence is aborted and the new one starts beginning with the ESC received. When a CAN (18) or SUB (1A) occurs the control sequence is aborted.

The control characters recognized by the **ADM 36**, the hexadecimal code, and the action taken are shown in **Table 3-10**. All other control codes cause no action to be taken. (The control characters are also listed in **Appendix A** by hexadecimal code for quick reference.)

**Table 3-10. Control Characters Received From Host**

| CONTROL CHARACTER | HEX CODE | ACTION |
|---|---|---|
| BEL | 07 | Bell - Sound a bell tone from keyboard. |
| BS | 08 | Backspace - moves the cursor left one character position. If cursor is at leftmost position, no action is taken. |
| CAN | 18 | Cancel - causes the control sequences to abort. Also causes the error character (▒) to be displayed on the screen. |
| CR | 0D | Carriage Return - moves the cursor to the leftmost character position on the current line. |
| DEL | 7F | Delete - ignored on input (not stored in input buffer). |
| ENQ | 05 | Enquiry - transmit the Answerback Message for terminal identification. |
| ESC | 1B | Escape - introduces a control sequence. |
| FF | 0C | Form Feed - interpreted as Line Feed. |
| HT | 09 | Horizontal Tab - moves the cursor to the next tab stop. If no further tab stops are set on the line, the cursor moves to the right margin. |
| LF | 0A | Line Feed - causes a line feed, or a New Line operation (see "Line Feed/New Line Mode", this section). |
| NUL | 00 | Null - ignored on input (not stored in input buffer). |
| SI | 0F | Shift In - select G0 character set (selected by the ESC ( sequence). |
| SO | 0E | Shift Out - select G1 character set (selected by the ESC ) sequence). |
| SUB | 1A | Substitute - interpreted as CAN. |
| XOFF | 13 | Causes ADM 36 to stop transmitting all codes except XOFF (DC3) and XON (DC1). |
| XON | 11 | Resume transmission by ADM 36. |

## 3.4.2 ANSI Control Sequences Mode

The following control sequences are software compatible to the American National Standards Institute (ANSI X3.64-1979) standards for control sequences in terminals.

Figure 3-3 outlines the basic elements of the ANSI control sequences format: (Control sequences listed as LSI private indicate the usage of a command not yet specified in the ANSI standard. The formation of the private sequences is in conformance with the X3.64-1979 Standard which provides for private commands in such cases.)

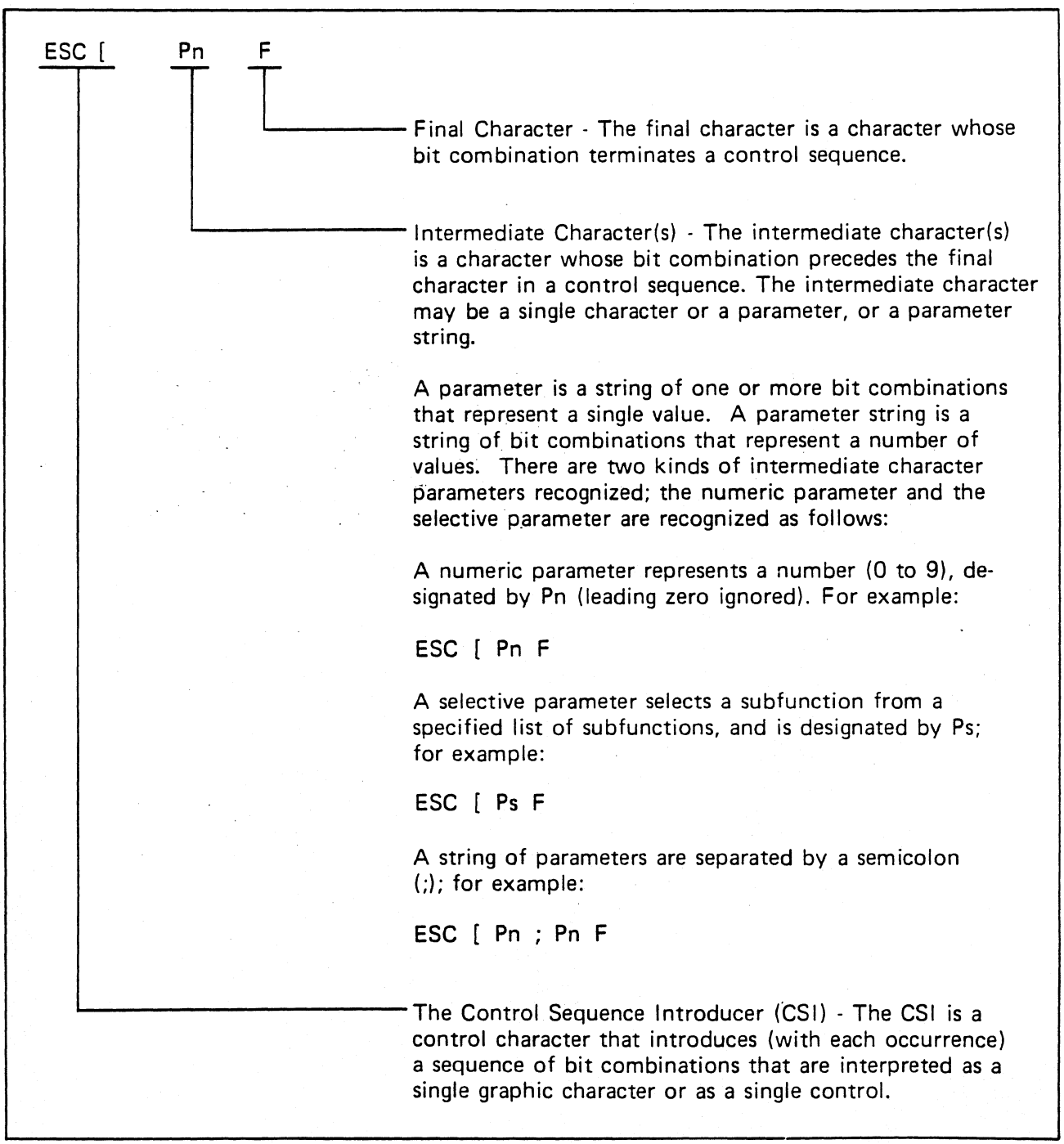


*Figure 3-3. Basic Elements of the ANSI Control Sequences Format*

Most control sequences have a function-dependent value, called the default value, that is assumed when no explicit value or a zero (0) is specified. If the control sequence has a default value, it will be specified in the associated sequence in the following paragraphs.

The USASCII graphic characters are used in the following tables and paragraphs to represent the ANSI coded control sequences. When international character sets are in use, the appropriate character for a specific control sequence will be the character in **Table 3-8** that corresponds to the equivelent hex value USASCII character. The ANSI control sequences are listed in groups of related functions as follows; and are summarized in **Table 3-11**:

- Special graphics and character set selection
- Cursor functions
- Keypad modes
- Screen control and edit functions
- Set/reset mode
- Output and print functions
- LED control
- Host/terminal control and status functions

**Table 3-11. ANSI Control Sequences Summary**

| FUNCTION GROUP | DESCRIPTION | MNEMONIC | CONTROL SEQUENCE |
|---|---|---|---|
| Special Graphics and Character Set Selection | Double-High Line | LSIDHL | ESC # 3 (top half) |
| | Double-Wide Line | LSIDWL | ESC # 4 (bottom) |
| | Select Character Set | SCS | ESC ( Fs<br>Designate G0 Character Set<br>ESC ) Fs<br>Designate G1 Character Set |
| | Single-Wide, Single-High Line | LSISWSHL | ESC # 5 |
| Cursor Functions | Cursor Backward | CUB | ESC [ Pn D |
| | Cursor Down | CUD | ESC [ Pn B |
| | Cursor Forward | CUF | ESC [ Pn C |
| | Cursor Position | CUP | ESC [ Pn; Pn H |
| | Cursor Position Report | CPR | ESC [ Pn; Pn R |
| | Cursor Up | CUU | ESC [ Pn A |
| | Horizontal and Vertical Position (Set Cursor) | HVP | ESC [ Pn; Pn f |
| | Index (Cursor Down With Scroll) | IND | ESC D |
| | New Line With Scroll | NEL | ESC E |
| | Restore Cursor and Attributes | LSICRC | ESC 8 |
| | Reverse Index (Cursor Up With Scroll) | RI | ESC M |
| | Save Cursor and Attributes | LSISCS | ESC 7 |

## Table 3-11. ANSI Control Sequences Summary (continued)

| FUNCTION GROUP | DESCRIPTION | MNEMONIC | CONTROL SEQUENCE |
|---|---|---|---|
| Keypad Mode | Keypad Application Mode | LSIKPAM | ESC = |
| | Keypad Numeric Mode | LSIKPNM | ESC > |
| Screen Control and Edit Functions | Define Area Qualifications | DAQ | ESC [ Ps o |
| | Delete Line | DL | ESC [ Pn M |
| | Delete Character | DCH | ESC [ Pn P |
| | Erase in Display | ED | ESC [ Ps J |
| | Erase in Line | EL | ESC [ Ps K |
| | Horizontal Tab Set | HTS | ESC H |
| | Insert Line | IL | ESC [ Pn L |
| | Select Graphic Redition | SGR | ESC [ Ps;...Ps m |
| | Screen Alignment | LSIALN | ESC # 8 |
| | Set Top and Bottom Margins | LSISTBM | ESC [ Pn;...Pn r |
| | Tabulation Clear | TBC | ESC [ Ps g |
| Set/Reset Mode | Reset Mode | RM | ESC [ Ps;...Ps l* |
| | Set Mode | SM | ESC [ Ps;...Ps h |
| (See Table 3-12 for a list of modes set with set/reset control sequences.) | | | |
| Output and Print | Device Status Report | DSR | ESC [ Ps n |
| | Media Copy | MC | ESC [ Ps i |
| LED Control Functions | Load LEDs | LSILL | ESC [ Ps q |
| Host/Terminal Status and Control Functions | Device Attributes | DA | ESC [ Ps c |
| | Identify Terminal | LSIID | ESC Z |
| | Invoke Self-Test | LSITST | ESC [ 2; Pn y |
| | Report Terminal Parameters | LSIREPTPARM | ESC [ 3; <comm par>; <comm nbits>; <comm xspeed>; <comm rspeed>; <clkmul>; <flags>; <ANSI/VT-52>; <prt par>; <prt nbits>; <prt xspeed>; <prt rspeed> x |
| | Request Terminal Parameters | LSIPEQTPARM | ESC [ l x |
| | Reset (Terminal) to Initial State | RIS | ESC c |

* Lower-case "L" character

## 3.5 SPECIAL GRAPHICS AND CHARACTER SET SELECTION

The following control sequences specifies the special graphics and character set selection format.

### 3.5.1 LSIDHL - Double-High Line (LSI Private)

ESC # 3 - top half
ESC # 4 - bottom half

The double-high line (LSIDHL) control sequences cause the line with the active cursor position to become the top or bottom half of a double-high (and double-wide) lines. The sequences must be used in pairs on adjacent lines, and the same character output must be sent to both lines to form the double-high characters.

### 3.5.2 LSIDWL - Double Wide Line (LSI Private)

ESC # 6

The double-wide line (LSIDWL) control sequence causes the line with the active cursor position to become double-width, single-height characters. The use of the double-wide line reduces the number of characters per line by half, and all characters to the right of the screen are lost.

### 3.5.3 SCS - Select Character Set

ESC ( Fs - Designate G0 character set
ESC ) Fs - Designate G1 character set

The select character set (SCS) control sequence selects the appropriate G0 and G1 character sets from one of 12 possible character and special graphic sets. The G0 and G1 character sets are invoked by the SI (shift in) and SO (shift out) codes.

Fs = 0 Line graphics
1 Alternate character set defined in SET-UP
2 Alternate (extra) ROM special graphics
3 Wide-point graphics
A UKASCII
B USASCII
E Spanish
F French
G German
I Italian
N Norwegian/Danish
S Swedish/Finnish

The UK (United Kingdom) and US (United States) ASCII sets, and the international character sets are in accordance with ANSI X3.4-1977, ISO 646-1973, and general usage. The other character sets are private. The special graphics means that the characters for codes 5F to 7E (hexadecimal) are replaced with other characters. The specified character set will be used until another SCS control sequence is received.

Examples:

ESC ( 0 - Selects the line graphics character set as the G0 character set (invoked by SI - shift in)

ESC ) A - Selects the UKASCII character set as the G1 character set (invoked by SO - shift out)

### 3.5.4 LSISWSHL - Single-Wide, Single-High Line

ESC # 5

The single-wide, single-high line (LSISWSHL) control sequence cause the line with the active cursor position to become single-wide, single-high (standard) characters.

**Note**

*If a line is either a Double-High or Double-Wide line, and the Single-Wide/Single-High line control sequence is used, the characters on the line will be positioned on the leftmost side of the screen.*

## 3.6 CURSOR FUNCTIONS

The following control sequences specify the cursor functions for the ADM 36, and are listed in aplhabetical order by function.

### 3.6.1 CUB - Cursor Backward

ESC [ Pn D

Default Value = 1

The cursor backward (CUB) control sequence moves the active cursor position to the left. The number of positions the cursor is moved is determined by the parameter (Pn). If the parameter value is zero (0) or one (1), the cursor is moved back one position to the left. If the cursor position is moved to the left more positions than the left margin, the cursor stops at the left margin. The default value of the parameter is one (1).

Pn = numeric parameter

Example:

ESC [ 3 D - moves the cursor to the left three positions.

### 3.6.2 CUD - Cursor Down (No Scroll)

ESC [ Pn B

Default Value = 1

The cursor down (CUD) with no scroll control sequence moves the active position of the cursor down one or more lines with the same column position. The number of lines the cursor is moved is determined by the parameter Pn. If the parameter value is zero (0) or one (1), the cursor is moved down one line. If the cursor position is moved down more lines than the bottom of the screen or the scrolling region, the cursor stops at the last line. The default value of the parameter is one (1).

Pn = numeric parameter

Example:

ESC [ 2 B - moves the cursor down two lines, at the same column position.

### 3.6.3 CUF - Cursor Forward

ESC [ Pn C

Default Value = 1

The cursor forward (CUF) control sequence moves the active position of the cursor to the right one or more positions. The number of positions the cursor is moved is determined by the parameter Pn. If the parameter value is zero (0) or one (1), the cursor is moved to the right one position. If the cursor position is moved forward more columns than the right margin, the cursor stops at the right margin. The default value of the parameter is one (1).

Pn = numeric parameter

Example:

ESC [ 9 C - moves the cursor nine positions to the right.

### 3.6.4 CUP - Cursor Position

ESC [ Pn; Pn H

Default Value = 1

The cursor position (CUP) control sequence moves the active position of the cursor to a specified line and column position. The positions are determined by the parameters Pn; Pn. The first parameter specifies the line number, and the second parameter specified the column position. If both parameter values are zero (0) or one (1), the cursor is moved to the first line, first column position. The default value of the parameters are first line, first column (equivalent to a cursor home action).

Pn = numeric parameter

Examples:

ESC [ 2; 1 H - moves the cursor to the second line, first column position.

ESC [ 3; 5 H - moves the cursor to the third line, fifth column position.

ESC [ H - moves the cursor to the home position (upper-left corner)

**Note**

*The CUP control sequence depends on the number of lines specified in the Origin Mode setting. See "LSICOM - Origin Mode", this section, for an explanation of this mode.*

### 3.6.5 CPR - Cursor Position Report

ESC [ Pn; Pn R

Default Value = 1

The cursor position report (CPR) control sequence reports the active cursor position to the host (which is solicited by a device status report (DSR) from the host). The position is reported by the parameters Pn; Pn, in which the first parameter is the line number and the second parameter the column position. If not parameters are present or if the parameters are zero (0), the default value is equivalent to the cursor home position (line one, column one).

Pn = numeric variable

**Note**

*The CPR control sequence depends on the Origin Mode setting. See "LSICOM - Origin Mode", this section, for an explanation of this mode.*

### 3.6.6 CUU - Cursor Up (No Scroll)

ESC [ Pn A

Default Value = 1

The cursor up (CUU) with no scroll control sequence moves the active position of the cursor up one or more lines at the same column position. The number of lines the cursor is moved is determined by the parameter Pn. If the parameter value is zero (0) or one (1), the cursor is moved up one line. If the cursor position is moved up more lines than the top of the screen or scrolling region, the cursor stops at the first line. The default value of the parameter is one (1).

Pn = numeric parameter

Example:

ESC [ 4 A - moves the cursor up four lines, at the same column position.

### 3.6.7 HVP - Horizontal and Vertical Position (Set Cursor )

ESC [ Pn; Pn f

Default Value = 1

The horizontal and vertical position (HVP) control sequence is used to move the active cursor to a specified position. The specified position is determined by the parameters Pn; Pn. The first parameter specifies the line number, and the second parameter specifies the column position. If a parameter value is either zero (0) or one (1), the cursor is moved to the first line or first column position, respectively. The default value (no parameter present) is the first line, first column (equivalent to a cursor home action).

On = numeric parameter

Example:

ESC [ 3; 1 f - moves the cursor to line three, column one.

**Note**

*The HVP control sequence depends on the Origin Mode setting. See "LSICOM - Origin Mode", this section, for an explanation of this mode.*

*The HVP control sequence is equivalent to the CUP control sequence.*

### 3.6.8 IND - Index (Cursor Down With Scroll)

ESC D

The index (IND) control sequence (or cursor down with scroll) moves the active position of the cursor down one line without changing the column position. If the cursor position is on the bottom line of the screen or scrolling region, then the cursor does not move but the screen or scrolling region is scrolled up one line. The old top line is lost and the new bottom line is cleared.

### 3.6.9 NEL - New Line With Scroll

ESC E

The new line with scroll (NEL) control sequence causes the active cursor position to move to the first character position on the next line down. If the cursor position is on the bottom line of the screen or scrolling region, then the cursor does not move but the screen or scrolling region is scrolled one line.

**Note**

*The New Line With Scroll control sequence to equivalent to carriage return (CR) followed by Index control sequence.*

### 3.6.10 LSICRC - Restore Cursor and Attributes (LSI Private)

ESC 8

The restore cursor and attributes (LSICRC) control sequence restores a previously saved cursor position, graphic rendition, and character set. The Restore Cursor and Attributes control sequence is complementary to Save Cursor and Attributes control sequence (LSICSC).

### 3.6.11 RI - Reverse Index (Cursor Up With Scroll)

ESC M

The reverse index (RI) or cursor up with scroll control sequence moves the active position of the cursor up one line without changing the column position. If the cursor position is on the top line of the screen or scrolling, then the cursor does not move, but the screen (or scrolling region) is scrolled down one line. The old bottom line is lost, and the new top line is cleared.

### 3.6.12 LSICSC - Save Cursor and Attributes (LSI Private)

ESC 7

The save cursor and attributes (LSICSC) control sequence causes the cursor position, graphic rendition, and the character set to be saved.

## 3.7 KEYPAD MODES

The following control sequences affect the numeric keypad on the terminal keyboard.

### 3.7.1 LSIKPAM - Keypad Application Mode (LSI Private)

ESC =

The keypad application mode (LSIKPAM) control sequence causes the numeric keypad to transmit control sequences as specified in **Table 3-7**, "Numeric (Auxiliary) Keypad", this section.

### 3.7.2 LSIKPNM - Keypad Numeric Mode

ESC >

The keypad numeric mode (LSIKPNM) control sequence causes the numeric keypad to transmit the ASCII codes corresponding to the actual characters on the keys. The ASCII codes are identified in **Table 3-7**, "Numeric (Auxiliary) Keypad", this section.

## 3.8 SCREEN CONTROL AND EDIT FUNCTIONS

The following control sequences are used for edit and control functions for the display screen. The screen control and edit functions are listed in alphabetical order by function.

### 3.8.1 DAQ - Define Area Qualification

ESC [ Ps o

The define area qualification (DAQ) control sequence defines beginning and end of protected fields (areas). In the **ADM 36**, the DAQ specifies the beginning and end of a string of consecutive characters that are protected against erasure by ED and EL when ERM is reset.

Ps = selective parameter

| Parameter (Ps) | Meaning |
|---|---|
| 0 | End of protective field. |
| 8 | Begin protective field. |

### 3.8.2 DL - Delete Line

ESC [ Pn M
Default Value = 1

The delete line (DL) control sequence deletes the contents of one or more adjacent lines as specified by the parameter Pn. A parameter value of zero (0) or one (1) deletes the contents

of the active line and shifts all adjacent lines one line up toward the active line.

Pn = numeric parameter

Example:

ESC [ 3 M - deletes the active line and the two following lines.

### 3.8.3 DCH - Delete Character

ESC [ Pn P

Default Value = 1

The delete character (DCH) control sequence deletes the character at the active cursor position or the active character and adjacent characters as specified by the parameter Pn. A parameter value of zero (0) or one (1) deletes one character at the active cursor position. All characters to the right of the deleted characters (if any) are shifted to the left toward the active position.

Pn = numeric parameter

Example:

ESC [ 2 P - deletes the character at the active cursor position and the character following.

### 3.8.4 ED - Erase In Display

ESC [ Ps J

The erase in display (ED) control sequence erases some or all of the display as specified by the parameter (Ps).

Ps = selective parameter

Parameter (Ps) Meaning

0 Erase the display from the active cursor position to the end of the screen.

1 Erase from the start of the display screen to the active cursor position, inclusive.

2 Erase all the lines of the display. (All lines are changed to single-width, and the cursor does not move.)

**Note**

*Any complete line erased by the ED control sequence is returned to single-width mode.*

Example:

ESC [ 2 J - erases all the lines of the display.

### 3.8.5 EL - Erase In Line

ESC [ Ps K

Default Value = 1

The erase in line (EL) control sequence erase some or all the characters on an active display line, as specified by the parameter Ps.

Ps = selective parameter

Parameter (Ps) Meaning

0 Erase from the active cursor position to the end of the line, inclusive.

1 Erase from the start of the line to the active cursor position, inclusive.

2 Erase the entire line and change to single width.

**Note**

*If the cursor is in column 1 (leftmost), then ESC [ 0 K is equivalent to ESC [ 2 K.*

### 3.8.6 HTS - Horizontal Tabulation Set

ESC H

The horizontal tabulation set (HTS) sets one horizontal tab stop at the active cursor position.

### 3.8.7 IL - Insert Line

ESC [ Pn L

Default Value = 1

The insert line (IL) control sequence inserts one or more erased lines as specified by the

parameter Pn. A parameter value of zero (0) or one (1) inserts an erased line at the active line and shifts all lines below the active line down.

Pn = numeric parameter

Example:

ESC [ 3 L - inserts three erased lines at the active line.

### 3.8.8 SGR - Select Graphic Rendition

ESC [ Ps;...Ps m

The select graphic rendition (SGR) control sequence invokes the graphic rendition specified by the parameters (Ps;...Ps). All characters following the SGR control sequence are rendered according to the specified parameter until the next occurrence of an SGR control sequence. Previously set attributes are retained.

Ps = selective parameter

| Parameter (Ps) | Meaning |
|---|---|
| 0 | All character attributes off |
| 1 | Boldface |
| 2 | Reduced |
| 4 | Underscore |
| 5 | Blinking |
| 7 | Reversed video |

Example:

ESC [ 1; 4 m - invokes boldface and underscored characters.

ESC [ 0; 5 m - clears any previous attribute, then invoke blinking.

### 3.8.9 LSIALN - Screen Alignment (LSI Private)

ESC # 8

The screen alignment (LSIALN) control sequence fills the entire display screen with uppercase E's for screen focus and alignment. The cursor is set to line 1/column 1.

### 3.8.10 LSISTBM - Set Top and Bottom Margins (LSI Private)

ESC [ Pn; Pn r

The set top and bottom margins (LSISTBM) control sequence defines the scrolling region of the display screen. The parameters Pn; Pn define the line numbers of the scrolling region. The first parameter is the line numbers of the first line in the scrolling region, and the second parameter defines the bottom line. The default value, when no parameters are specified, is the entire screen with no margins.

The scrolling region must be at least two lines, with the first number specified smaller than the second number. The cursor is placed in the home position (first line, first column).

Pn = numeric parameter

Example:

ESC [ 1; 10 r - specifies the scrolling region as line 1 through 10.

### 3.8.11 TBC - Tabulation Clear

ESC [ Ps g

The tabulation clear (TBC) control sequence is used to clear one or all horizontal tab stops. The tabulation to be cleared is determined by the selective parameter Ps.

Ps = selective parameter

| Parameter (Ps) | Meaning |
|---|---|
| 0 | Clear the horizontal tab stop at the active cursor position. |
| 3 | Clear all horizontal tab stops. |

The default value when no parameter is specified is zero (0). All other parameter values besides the zero (0) and three (3) are ignored.

## 3.9 SET/RESET MODE

The set and reset mode control sequences specifies the mode of operation for the ADM 36. **Table 3-12** summarizes the modes that are changed with the set and reset control sequence parameters.

**Table 3-12. Set/Reset Mode Control Sequence Parameters**

| PARAMETER (Ps) | SET MODE MEANING | RESET MODE MEANING | ANSI MNEUMONIC |
|---|---|---|---|
| 0 | Error (ignored) | Error (ignored) | – |
| 2 | Lock Keyboard | Unlock Keyboard | KAM |
| 4 | Insertion Mode | Replacement Mode | IRM |
| 6 | Erasure Mode - Erase all screen | Erasure Mode - Erase unprotected screen | ERM |
| 12 | Local Echo Off | Local Echo On | SRM |
| 20 | New Line Mode | Line Feed Mode | LNM |
| ?1 | Cursor Keys - Application Mode | Cursor Keys - ANSI Cursor Control Mode | LSICKM |
| ?2 | ANSI Mode (in VT-52 Mode ignored) | VT-52 Mode | LSIANM |
| ?3 | 132 Columns | 80 Columns | LSICOLM |
| ?4 | Scroll Mode - Smooth | Scroll Mode - Jump | LSISCLM |
| ?5 | Black-on-White Screen Mode | White-on-Black Screen Mode | LSISCNM |
| ?6 | Origin Mode - Relative Cursor Address | Origin Mode - Absolute Cursor Address | LSIOM |
| ?7 | Wraparound Mode On | Wraparound Mode Off | LSIWM |
| ?8 | Auto-Repeat Mode On | Auto-Repeat Mode Off | LSIARM |
| ?18 | Form Feed Mode On | Form Feed Mode Off | LSIFF |
| ?19 | Print Extent Mode - full | Print Extent Mode - partial | LSIEXT |

*Ignored in VT-52 Mode

The set and reset mode control sequences and modes that are changed by these control sequences are explained in the following paragraphs.

### 3.9.1 RM - Reset Mode

ESC [ Ps;...Ps 1*

(*lower case "L")

The reset mode (RM) control sequence resets one or more **ADM 36** modes as specified by the parameters Ps;...Ps. Each mode to be reset must be specified by separate parameters.

Ps = selective parameters (as specified in **Table 3-12**)

Example:

ESC [ 4; 20 1 - resets mode to replacement and line feed mode.

ESC [ ?4; ?5 1 - resets mode to jump scroll and white-on-black screen mode.

### 3.9.2 SM - Set Mode

ESC [ Ps;...Ps h

The set mode (SM) control sequence sets one or more modes within **ADM 36**, as specified by the parameters Ps;...Ps. Each mode to be set is specified by a separate parameter. A mode is set until reset by a reset (RM) control sequence.

Ps = selective parameter (as specified in **Table 3-12**)

Example:

ESC [ ?3; ?4; ?5 h - sets the **ADM 36** modes to 132 columns, smooth scroll, and black-on-white screen.

## 3.10 MODES APPLICABLE TO SET/RESET

The following modes are specified by parameters in either the set (SM) or reset (RM) modes in the **ADM 36**.

### 3.10.1 KAM - Keyboard Action Mode (Lock/Unlock)

The keyboard action mode is specified by a parameter in either the set mode (SM) or reset mode (RM) control sequence. In the set state the **ADM 36** keyboard will be locked; no further data may be input, and the "KBD Locked" indicator will illuminate. In the reset state, the keyboard is unlocked; data may be input, and the "KBD Locked" indicator will be off. The keyboard lock condition may also be cleared by entering then exiting set-up mode. The following control sequences specify the keyboard action mode:

ESC 2 h - lock keyboard

ESC 2 l - unlock keyboard

### 3.10.2 IRM - Insert/Replacement Mode

The insert/replacement mode (IRM) is specified by a parameter in either the set mode (SM) and reset mode (RM) control sequence. In the set state the terminal is in insert mode and the keyboard indicator light (L3) is illuminated. In the insert mode all incoming characters are placed at the active cursor position, and all characters to the right on the active line are shiftd to the right. All characters shifted past the right margin are not wrapped around to the next line, but are dropped from memory.

In the reset state the terminal is in replacement mode and all incoming characters overlay the current characters starting at the active cursor position.

The following control sequences specify the insert/replacement mode:

ESC 4 h - set insert mode

ESC 4 l - set replacement mode

### 3.10.3 ERM - Erasure Mode

The erasure mode (ERM) is specified by a parameter in either the set mode (SM) and reset mode (RM) control sequence. In the set state, erase functions erase all characters regardless of their protected state. In the reset state, erase functions erase only unprotected characters. (See "Define Area Qualification - DOQ", **this section**, for an explanation of protected and unprotected areas.) The following control sequences specify the erasure mode:

ESC 6 h - set mode control sequence (erases all characters)

ESC 6 l - reset mode control seuence (erases only)

### 3.10.4 SRM - Send/Receive Mode (Local Echo)

The send/receive mode is specified by a parameter in either the set mode (SM), or reset mode (RM) control sequence. In the set state, the local echo feature is disabled. The **ADM 36** operates in full-duplex mode and for characters transmitted to be displayed, they must be echoed from the host when on-line. In the reset state, local echo is enabled. When the **ADM 36** is on-line transmitted characters are sent to the host and to the display, however, communications mode remains full-duplex. The following control sequences specify the send/receive mode:

ESC 12 h - set local mode

ESC 12 l - reset local mode

### 3.10.5 LNM - Line Feed/New Line Mode

The line feed/new line mode (LNM) is specified by a parameter in either the set mode (SM) or reset mode (RM) control sequence. In the set state the line feed (LF) moves the cursor to the first character position on the following line, and causes the RETURN key to send a carriage return (CR) and a line feed code. The CR and LF is called the New Line (NL) option.

In the reset state the LF is interpreted as a vertical movement of the active position only (as defined in ANSI Standard X3.4-1977), and causes the RETURN key to send the single CR code.

The following control sequence specify the line feed/new line mode:

ESC 20 h - set new line option

ESC 20 l - set line feed only

**Note**
*The line feed/new line mode does not affect the Index (IND) or Next Line (NEL) control sequences.*

### 3.10.6 LSICKM - Cursor Keys Mode (LSI Private)

The cursor keys mode (LSICKM) is specified by a parameter in either the set mode (SM) or reset mode (RM). The cursor keys mode is only effective when the terminal is in Keypad Application Mode (see "Keypad Application Mode - LSIKPAM" **this section**), and the ANSI mode is set (see "ANSI/VT-52 Mode" **this section**). If the above conditions are met, the set state causes the four cursor keys will send application functions. In the rest state the four cursor keys will send ANSI cursor control commands. The following control sequences specify the cursor keys mode:

ESC ?1 h - set application mode

ESC ?1 l - set numeric mode

### 3.10.7 LSIANM - ANSI/VT-52 Mode - (LSI Private)

The ANSI/VT-52 mode (LSIANM) is specified by a parameter in either the set or reset mode. In the set state only ANSI compatible escape and control sequences are interpreted and executed. In the reset state only VT-52 compatible escape sequences are interpreted and executed. The following control sequences specify and ANSI/VT-52 mode:

ESC ?2 l - set VT-52 mode

ESC ?2 h - Set ANSI mode

### 3.10.8 LSICOLM - Column Mode (LSI Private)

The column mode (LSICOLM) is specified by a parameter in either the set mode (SM) or reset mode (RM) control sequence. In the set state the maximum number of columns per line on the display screen is 132. In the reset state the maximum number of columns per line on the display screen is set to 80. The following control sequences specify the column mode.

ESC ?3 h - set 132 columns

ESC ?3 l - set 80 columns

### 3.10.9 LSISCLM - Scrolling Mode (LSI Private)

The scrolling mode (LSISCLM) is specified by a parameter in either the set mode (SM) or reset mode (RM) control sequence. In the set state the scroll is smooth, and scrolls at a maximum rate of six lines per second. In the reset state the scroll "jumps" instantaneously. The following control sequences specify the scrolling mode:

ESC ?4 h - set smooth scroll

ESC ?4 l - set jump scroll

### 3.10.10 LSISCNM - Screen Mode (LSI Private)

The screen mode (LSISCNM) is specified by a parameter in either the set mode (SM) or reset mode (RM) control sequence. The set state causes the screen to be white with black characters. The reset state causes the screen to be black with white characters. The following control sequences specify the screen mode:

ESC ?5 h - set black-on-white screen mode

ESC ?5 l - set white-on-black screen mode

### 3.10.11 LSIOM - Origin Mode (LSI Private)

The origin mode (LSIOM) specifies the origin (home position) of the cursor on the display screen. The origin mode is specified by a parameter in either the set mode (SM) or reset mode (RM) control sequence. In the set state the origin is the upper-left character position within the current margin settings. The line and column numbers are relative to the current margins. The cursor cannot be positioned outside these margins.

In the reset state the origin is the upper-left character position (home position) on the display screen. The line and column numbers are independent of the current margin settings. The cursor may be positioned

outside the current margin settings by the Cursor Position (CUP) and Horizontal and Vertical Position (HVP) control sequences. (See "Cursor Position - CUP" and "Horizontal and Vertical Position - HVP", **this section** for an explanation of these cursor control sequences).

The following control sequences specify the origin mode of the screen:

ESC ?6 h - set relative cursor address - origin mode

ESC ?6 l - set absolute cursor address - origin mode

**Note**

*The cursor is moved to the home position when the origin mode is set or reset. Lines and columns are numbered consecutively, with the origin (home position) being line 1, column 1.*

### 3.10.12 LSIWM - Wrap-around Mode (LSI Private)

The wrap-around mode (LSIWM) is specified by a parameter in either the set mode (SM) or reset mode (RM). In the set state all displayable characters received after the last character position on the line are advanced to the first character position on the next line. In the reset state all characters received at the last character position on the line will replace the previous displayed character. The following control sequences specify the wrap-around mode:

ESC ?7 h - set wrap-around mode

ESC ?7 l - no wrap-around feature, replaces last character on line

### 3.10.13 LSIARM - Auto Repeat Mode (LSI Private)

The auto repeat mode (LSIARM) is specified by a parameter in either the set mode (SM) or reset mode (RM). In the set state certain keyboard keys automatically repeat (see "Auto Repeat", **Section 2**). In the reset state the keyboard keys do not automatically repeat. The following set/reset mode control sequences specify the auto repeat mode:

ESC ?8 h - set auto repeat on

ESC ?8 l - reset auto repeat off

### 3.10.14 LSIFF - Form Feed Mode (LSI Private)

The form feed mode (LSIFF) is specified by a parameter in either the set mode (SM) or reset mode (RM) control sequence. In the set state a form feed character is added to the characters at the end of the Print Screen function (see "Print Screen", **this section**). In the reset state the carriage return (CR) and line feed (LF) are always transmitted to the printer as part of the Print Screen function; no print terminator character is added. The following control sequences specify the form feed mode:

ESC ?18 h - set mode control sequence (form feed character added to Print Screen)

ESC ?18 l - reset mode control sequence (no print terminator character)

### 3.10.15 LSIEXT - Print Extent Mode (LSI Private)

The print extent mode (LSIEXT) is specified by a parameter in either the set mode (SM) or reset mode (RM) control sequence. In the set state all characters on the display screen are transmitted to the printer during a Print Screen function (see "Print Screen", **this section**). In the reset state only characters between the scrolling region margins are transmitted to a printer during a Print Screen fucntion. (See "Set Top and Bottom Margins - LSISTBM", **this section**, for an explanation of the scrolling region.) The following control sequences specify the print extent mode:

ESC ?19 h - print full screen

ESC ?19 l - print only the scrolling region contents

## 3.11 OUTPUT AND PRINT FUNCTIONS

The following control sequences specifies the output and print functions of the **ADM 36**.

The output and print functions are listed in alphabetical order by function.

### 3.11.1 DSR - Device Status Report

ESC Ps n

The device status report (DSR) control sequence reports the general status of the device sending the control sequence and/or requests a status report from the receiving device as specified by the parameter Ps.

Ps = selective parameter

Parameter (Ps) Meaning

- 0 Response - ready, no malfunctions detected
- 3 Response - malfunction, retry
- 5 Command - please report status using DSR
- 6 Command - please report active position using a CPR control sequence
- ?10 Response - printer is ready
- ?11 Response - printer is not ready
- ?13 Response - no printer
- ?15 Command - please report printer status

### 3.11.2 MC - Media Copy

ESC Ps i

The media copy (MC) control sequence controls the transfer of data between the terminal and an auxilary input/output device. The direction of the data transfer and the identification of th auxiliary device is specified by the parameter Ps.

Ps = selective parameter

Parameter (Ps) Meaning

- 0 Dump screen contents to printer (Print Screen function, explained below)
- 4 Terminate printer controller mode
- 5 Select printer controller mode (Printer Controller Mode, explained below)
- ?1 Print line containing cursor (Line function, explained below)
- ?4 Terminate line-at-a-time mode
- ?5 Select line-at-a-time mode (Auto Print Mode, explained below)

The Print Screen function is selected from the video terminal keyboard (by pressing the SHIFT and ENTER keys), or by the host computer. The print screen function transmits a complete copy of the screen display to the serial printer. Depending on the selection of the Print Extent Mode, either the entire screen or the contents with the scrolling region are transmitted to the printer. The scrolling region is selected by the Set Top and Bottom Margins control sequence. (See "Set Top and Bottom Margins - LSISTBM" and "Print Extent Mode - LSIEXT" **this section** for a detailed explanation.)

The Printer Controller mode is selected by the host computer. When Printer Controller mode is selected all characters received from the host are transmitted to the serial printer without displaying (not displayed on the screen of the video terminal),converting, or altering the characters in any way.

The Print Cursor Line function is selected by the host computer. This function prints the line of the screen containing the cursor. The cursor position is not changed by this function; and the line on the screen cannot be changed before being printed.

The Auto Print (line-at-a-time) mode is selected from the video terminal keyboard (by pressing the CNTL and ENTER keys), or by the host computer. When auto print is selected one line at a time is printed from the video display screen. The line is printed as soon as the cursor is moved off the line by a line feed (LF), form feed (FF), or vertical tab character. When the cursor moves off the line, the line cannot be altered before being printed.

Examples:

ESC 0 i - outputs the screen contents to a printer

ESC 5 i - select the Printer Controller Mode (all characters are transmitted to printed without being displayed on the screen).

ESC 4 i - terminates the Printer Controller Mode.

## 3.12 LED CONTROL FUNCTIONS

The following paragraphs explain the control sequence function that controls the LEDs (light emitting diodes) on the terminal keyboard.

### 3.12.1 LSILL - Load LEDs (LSI Private)

ESC Ps q

Default Value = 0

The load LEDs (MKLL) control sequence clears or loads any combination of the four programmable LEDs on the terminal keyboard, as specified by the parameter Ps. The LEDs are located on the upper-left corner of the keyboard and are numbered L1 through L4. Lighted LED's are extinquished only by the parameter zero (0) (Ps = 0).

Ps = selective parameter

| Parameter (Ps) | Meaning |
|---|---|
| 0 | Clear all LEDs (L1 through L4) |
| 1 | Illuminate L1 |
| 2 | Illuminate L2 |
| 3 | Illuminate L3 |
| 4 | Illumniate L4 |

## 3.13 HOST/TERMINAL STATUS AND CONTROL FUNCTIONS

The following control sequences specify the host and terminal status and control functions. These functions are listed in alphabetical order by function.

### 3.13.1 DA - Device Attributes

ESC Ps c

The device attributes (DA) control sequence requests a device to send a device attributes control sequence to identify itself to the host with either no parameter or a parameter of zero (0). The DA control sequence also responds to the request for identification by parameters whose value is greater than zero. The numeric parameter for the DA control sequence are as follows:

| Parameter (Ps) | Meaning |
|---|---|
| 0 | Request - (identification) |
| ?1;11 | Response - Advanced Video Option (AVO) and Printer Port |

### 3.13.2 LSIID - Identify Terminal (LSI Private)

ESC Z

The identify terminal (LSIID) control sequence responds to a request from host for terminal identification the same as the Device Attributes (DA) control sequence. (See "Device Attributes - DA" control sequence **this section.**)

**Note**

*Not recommended for new design. Included for compatability only.*

### 3.13.3 LSITST - Invoke Self-Test (LSI Private)

ESC [ 2; Ps y

The invoke self-test (LSITST) invokes a test to be performed, as specified by the parameter (Ps) indicating the test.

Ps = selective parameter

| Parameter (Ps) | Meaning |
|---|---|
| 0 | No test is performed, screen is cleared and video terminal operates with last stored SET-UP features settings. |
| 1 | Power-up self-test |
| 2 | Data loop-back test* |

## Table 3-13. Report Terminal Parameters.

| PARAMETERS | PARAMETER VALUE | DEFINITION |
|---|---|---|
| <comm par> | 1 | No parity set for communication interface. |
| | 2 | Space parity set for communication interface. |
| | 3 | Mark parity set for communication interface. |
| | 4 | Odd parity set for communication interface. |
| | 5 | Even Parity set for communication interface. |
| <comm nbits> | 1 | 8 data bits per character |
| | 2 | 7 data bits per character |
| <comm xspeed> | 0 | 50 Bits per second |
| | 8 | 75 Bits per second |
| | 16 | 110 Bits per second |
| | 24 | 134.5 Bits per second |
| | 32 | 150 Bits per second |
| | 40 | 200 Bits per second |
| | 48 | 300 Bits per second |
| | 56 | 600 Bits per second |
| | 64 | 1200 Bits per second |
| | 72 | 1800 Bits per second |
| | 80 | 2000 Bits per second |
| | 88 | 2400 Bits per second |
| | 96 | 3600 Bits per second |
| | 104 | 4800 Bits per second |
| | 112 | 9600 Bits per second |
| | 120 | 19200 Bits per second |
| <comm rspeed> | Same as <com xspeed> parameter. | |
| <clkmul> | 1 | Bit rate multiplier is 16. |
| <flags> | 0-15 | Communicates the flag value of SET-UP B. The flag value is a decimal number between 0 and 15, inclusive. |
| <ANSI/VT-52> | 0 | VT-52 Mode |
| | 1 | ANSI Mode |
| <prt par> | Same as <comm par> parameters | |
| <prt nbits> | Same as <comm nbits> parameters | |
| <prt xspeed> | Same as <comm xspeed> parameters. | |
| <prt rspeed> | Same as <comm xspeed> parameters. | |

**Table 3-14. VT-52 Mode Escape Sequence Summary**

| VT-52 MODE FUNCTIONS | ESCAPE SEQUENCE |
|---|---|
| Cursor Up | ESC A |
| Cursor Down | ESC B |
| Cursor Left | ESC D |
| Cursor Right | ESC C |
| Cursor To Home | ESC H |
| Cursor Up With Scroll | ESC I |
| Direct Cursor Address | ESC Y Pn Pn |
| Enter Alternate Keypad Mode | ESC = |
| Enter ANSI Mode | ESC < |
| Enter Graphics Mode | ESC F |
| Erase To End Of Line | ESC K |
| Erase To End Of Screen | ESC J |
| Exit Alternate Keypad Mode | ESC > |
| Exit Graphics Mode | ESC G |
| Identify | ESC Z |
| Inverse Video | ESC 3 |
| Normal Video | ESC 4 |
| Print Cursor Line Function | ESC V |
| Print Screen Function | ESC [ |
| Select Auto Print (Line-at-a-Time) Mode | ESC ^ |
| Select Printer Controller Mode | ESC W |
| Terminate Auto Print (Line-at-a-Time) Mode | ESC _ |
| Terminate Printer Controller Mode | ESC X |

9 Power-up self-test indefinitely

10 Data loop-back test indefinitely*

*Requires loop-back connector (pin 2 to 3 of RS-232 host link).

### 3.13.4 LSIREPTPARM - Report Terminal Parameters (LSI Private)

ESC [ 3 ;<comm par>;<comm nbits>;<comm xspeed>;<comm rspeed>;<clkmul>;<flags>; <ANSI/VT-52>;<prt par>;<prt nbits>;<prt xspeed>;<prt rspeed>x

The report terminal parameters (LSIREPTPARM) control sequence is transmitted on receipt of a Request Terminal Parameters (LSIREQTPARM) control sequence from the host. **Table 3-14** lists all the parameters and definitions of each.

### 3.13.5 LSIREQTPARM - Request Terminal Parameters

ESC [ 1 x

The request terminal parameters (LSIREQTPARM) control sequence is sent by the host to determie the status of selected terminal parameters. The LSIREQTPARM control sequence is sent by the terminal when requested by the LSIREQTPARM control sequence. (See "Report Terminal Parameters - LSIREPTPARM", **this section** for reference.)

### 3.13.6 RIS - Reset (Terminal) To Initial State

ESC c

The reset to initial state (RIS) control sequence resets the terminal to its initial state (the state it has after power-on). The RIS control sequence also executes the power-up self-test.

## 3.14 VT-52 MODE CONTROL SEQUENCES

The following paragraphs detail the escape sequences that are software compatible to the VT-52 control sequences. The control sequences are listed in alphabetical order by function, and are summarized in **Table 3-14.**

### 3.14.1 Cursor Up

ESC A

The cursor up escape sequence moves the active cursor position up one position without altering the horizontal position. The cursor will stop at the top margin if an attempt is made to move up past this margin.

### 3.14.2 Cursor Down

ESC B

The cursor down escape sequence moves the active cursor position down one position without altering the horizontal position. The cursor will stop at the bottom margin if an attempt is made to move down this margin.

### 3.14.3 Cursor Left

ESC D

The cursor left escape sequence moves the active cursor position to the left. The cursor will stop at the left margin if an attempt is made to move the cursor past this margin.

### 3.14.4 Cursor Right

ESC C

The cursor right escape sequence moves the active cursor position to the right. The cursor will stop at the right margin if an attempt is made to move past this margin.

### 3.14.5 Cursor To Home

ESC H

The cursor to home escape sequence moves the cursor to the home position (line 1, column 1).

### 3.14.6 Cursor Up With Scroll

ESC I

The cursor up with scroll escape sequence moves the active cursor position up position without altering the horizontal position. If the cursor is on the top line of the screen, a scroll down is performed.

### 3.14.7 Direct Cursor Address

ESC Y Pn Pn

The direct cursor address screen escape sequence moves the cursor to the specified line and column number. The line and column numbers are sent as ASCII codes whose values are the number plus 1F (Hex).

Pn = 1F (Hex) plus line/column number.

Example:

ESC Y space space - moves cursor to home position.

### 3.14.8 Enter Alternate Keypad Mode

ESC =

The alternate keypad mode escape sequence causes the auxiliary keypad keys to send unique identifiable escape sequences for use by applications programs.

**Note**

*See "Keypad Modes" control sequence in the ANSI Control Sequence, this section for information concerning the alternate keypad mode options.*

### 3.14.9 Enter ANSI Mode

ESC <

The enter ANSI mode escape sequence causes all subsequent escape sequences to be interpreted according to ANSI Standards X3.64-1979 and X3.41-1974. All alternate sequences in this section then will not be recognized.

### 3.14.10 Enter Graphics Mode

ESC F

The enter graphic mode escape sequence causes the special graphics character set to be used. (See **Table 3-8**, Special Graphics Character Sets for a list of the special graphics characters.)

### 3.14.11 Erase to End of Line

ESC K

The erase to end of line escape sequence erases all characters from the active cursor position to the end of the current line. The active cursor position is not changed.

### 3.14.12 Erase to End of Screen

ES J

The erase to end of screen escape sequence erases all characters from the active cursor position to the end of the screen. The active cursor position is not changed.

### 3.14.13 Exit Alternate Keypad Mode

ESC >

The exit alternate keypad mode exits the application keypad mode and returns the auxiliary keypad to numeric mode. The auxiliary keypad then sends the ASCII codes for the functions or characters engraved on the keys.

### 3.14.14 Exit Graphic Mode

ESC G

The exit graphics mode escape sequence cancels the special graphics character set mode and causes the standard ASCII character set to be used.

### 3.14.15 Identify

ESC Z

The identify escape sequence causes the terminal to send its identifier escape sequence to the host. The terminal escape identifier escape sequence is as follows:

ESC / Z

### 3.14.16 Inverse Video

ESC 3

The inverse video escape sequence changes to display screen to black characters on a white screen.

### 3.14.17 Normal Video

ESC 4

The normal video escape sequence causes the video terminal screen to display white characters on a black screen (normal screen when powered-up).

### 3.14.18 Print Cursor Line Function

ESC V

The print cursor line function prints the line of the display screen containing the active cursor. The cursor position is not changed by this function. Once the print cursor line function is selected, the line cannot be changed before being printed.

### 3.14.19 Print Screen Function

ESC [

The print screen function escape sequence transmits a complete copy of the video terminal screen display to the serial printer. After the print screen function is selected, the contents of the screen cannot be changed before being printed.

### 3.14.20 Select Auto Print (Line-at-a-Time) Mode

ESC ^

The select auto print (line-at-a-time) mode escape sequence causes the video terminal screen to print one line at a time. A line on the display screen is printed as soon as the cursor moves off the line. The cursor is moved off by a line feed (LF), form feed (FF), or vertical tab character.

### 3.14.21 Select Printer Controller Mode

ESC W

The select printer controller escape sequence mode causes all characters received from the host to be transmitted to the serial printer without displaying, converting, or altering the characters in any way.

### 3.14.22 Terminate Auto Print (Line-at-a-Time) Mode

ESC _

The terminate auto print escape sequence terminates the Auto Print Mode (as explained in "Select Auto Print (Line-at-a-Time) Mode", **this section**).

### 3.14.23 Terminate Printer Controller Mode

ESC X

The terminate printer controller mode escape sequence terminates the printer controller mode (as explained in "Select Printer Controller Mode", **this section**).

# SECTION IV
# THEORY OF OPERATION

## 4.1 GENERAL DESCRIPTION

This section contains theory of operation for the **ADM 36** Video Display Terminal.

## 4.2 FUNCTIONAL DESCRIPTION

The **ADM 36** is a microprocessor-based video display terminal which communicates with DEC® computers and DEC compatible systems.

The **ADM 36** is composed of a monitor unit and a separate keyboard unit. A microprocessing unit (MPU), ROM, RAM, video monitor, and power supply is included in the monitor unit. Keyboard logic is contained in the keyboard unit.

There are five functional sections in the **ADM 36** plus the monitor and power supply. **Section 6** of this manual contains the theory of operation for the monitor and for the power supply. Listed below are the five functional sections found on the main logic board and keyboard.

1. CPU -- contains the system clock, Z80 MPU, system timing control logic, address buffers, and address decoders.
2. External interface -- contains interface logic for a PRINTER port, MODEM/ CURRENT LOOP port.
3. Keyboard -- contains keyboard matrix, 3870 (F8) MPU, keyboard interface adapter, and keyboard timing logic.
4. Video display -- contains display RAM, CRT control, and character generation logic.
5. Memory -- contains 12K of system ROM and 2K of system RAM.

## 4.3 THEORY OF OPERATION

### 4.3.1 Introduction

This section provides a functional description of the **ADM 36** circuitry. The logical functions are first described at the system level, then individual circuit descriptions using detailed block diagrams are presented.

### 4.3.2 System Functional Description

The **ADM 36** functional block diagram is shown in **figure 4-1**.

Data to be displayed on the CRT is either entered from the keyboard or sent to the terminal from the host computer.

If data is entered from the keyboard, it is placed into a transmit FIFO and transmitted to the host. If the **ADM 36** is in Local mode the data is placed into a received FIFO and acted upon.

The Video Display section, causes the contents of the Display RAM to be periodically displayed on the screen.

Data received from the host computer is routed from the External Interface section to the CPU section. The data is displayed on the CRT in the same manner as if it were entered from the keyboard in Local mode.

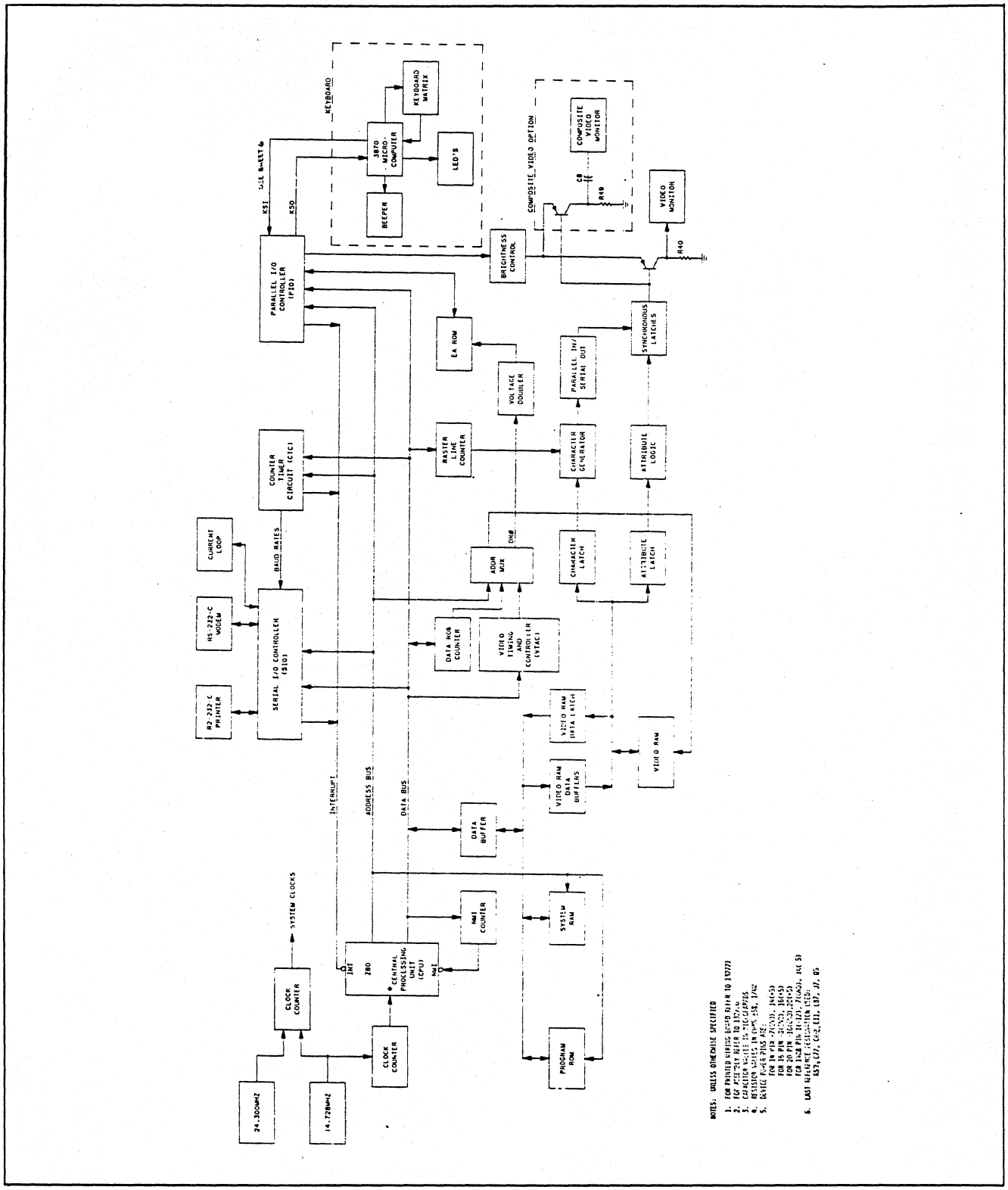


*Figure 4-1. ADM 36 Functional Block Diagram*

In Block mode (optional) the **ADM 36** transmits data by retrieving the data from the Display RAM and routing it to the CPU section over the Data Bus. From the CPU section, the data is again placed on the Data Bus and sent to the External Interface section where it is output from the interface ports.

### CPU Section

The CPU section contains the Z80 MPU, associated address decoding logic, and system timing control. The CPU section performs all the addressing and logic functions of the **ADM 36**.

### External Interface Section

The External Interface section contains the circuitry to interface the **ADM 36** with RS-232C point-to-point signals and 20mA current loop signals (passive). Logic for an RS-232C SERIAL PRINTER port (allowing various printers to be used with the **ADM 36**) is also included.

### Video Section

The Video section contains the display logic needed to drive the Cathode Ray Tube (CRT). This block also contains 8K of Display RAM and the character generation circuits, as well as the Video logic and monitor.

### System Memory Section

The Memory section of a standard **ADM 36** contains 12K of Read Only Memory (ROM) and 1K of Random Access Memory (RAM). The 12k of ROM contains programs which allow the **ADM 36** to perform its various functions. The 1K of RAM is used as system scratchpad memory and as a receive and transmit buffer.

## 4.4 CPU SECTION DETAILED BLOCK DIAGRAM

A block diagram of the CPU section is shown in **figure 4-2**.

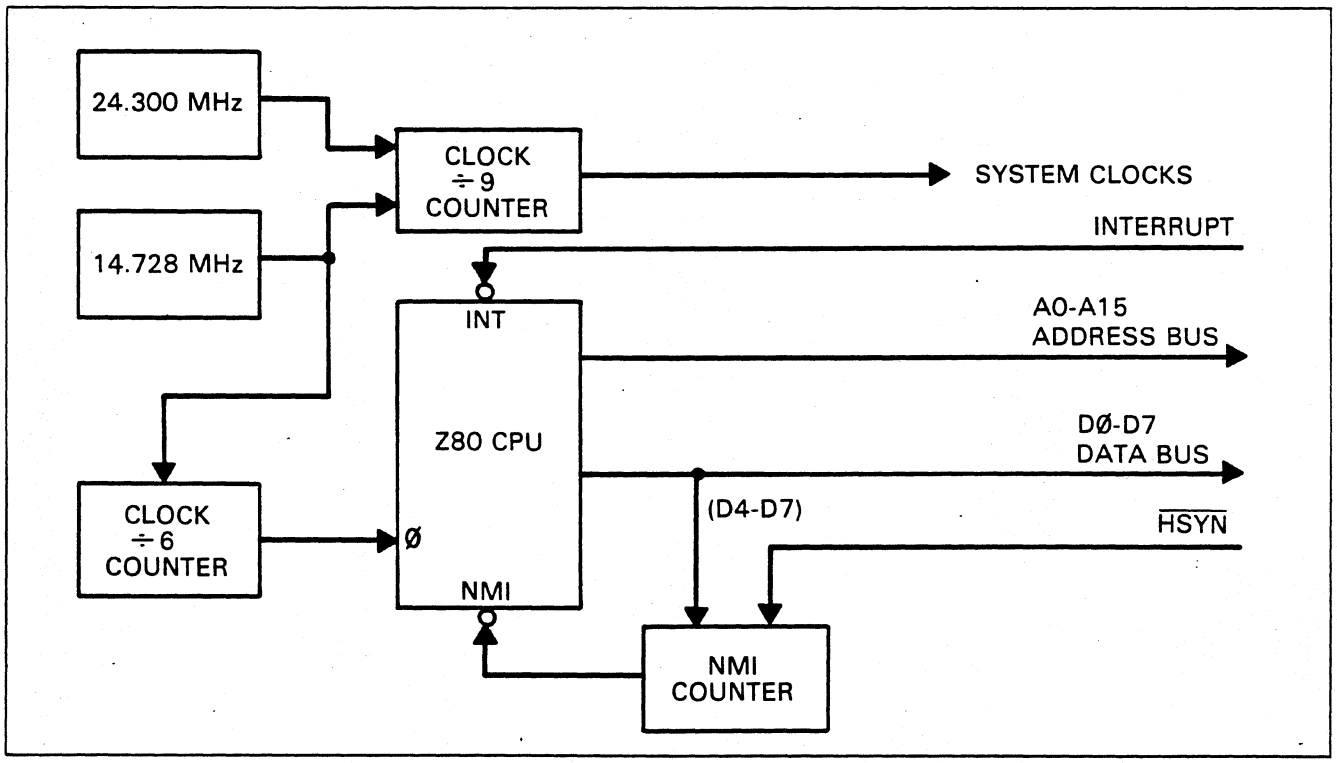


*Figure 4-2. CPU Section Block Diagram*

### 4.4.1 CPU Section Overview

The CPU section contains logic to produce the timing signals and control all data operations in the **ADM 36**.

The MPU receives instructions of the Data Bus and performs data manipulation operations whose results are output on A0-A15 and D0-D7.

A0-A15 are placed on the Address Bus and sent to the Memory section, External Interface section, Video section, and Keyboard Interface section.

A11-A15 are also routed to the Address Decoder where they are used to produce chip select signals.

### 4.4.2 Z80 MPU U37 (Schematic P2)

The **ADM 36** incorporates a Z80 MPU to control all addressing and data functions.

The Z80 microprocessor (see **figure 4-3**) contains three 16-bit registers and two 8-bit accumulator registers. The 8-bit A Register or A' Register is used to hold results from operations performed by the ALU. The Program Counter is a 16-bit Register which hold the program address. The three 16-bit Registers can also be used as single eight-bit registers. The Stack Pointer is a two-byte, 16-bit register that contains the address of the next available location in the system stack.

The sixteen address lines A0-A15, output from the MPU, specify the address in memory where data on the data bus is to be read from or written into.

The bidirectioal data bus (D0-D7) transfers data between the Z80 MPU and the rest of the system. All data transfers in the **ADM 36** are routed through the MPU.

The following status signals are also used by the MPU.

The $\overline{\text{MEMORY REQUEST}}$ ($\overline{\text{MEMRQ}}$) goes low in order to access memory and transfer the data to the Data Bus.

$\overline{\text{REFRESH}}$ ($\overline{\text{RFSH}}$) goes low to refresh the dynamic memories of the **ADM 36**.

$\overline{\text{READ}}$ ($\overline{\text{RD}}$) goes low in order to enable data read operations.

$\overline{\text{WRITE}}$ ($\overline{\text{WR}}$) goes low in order to enable data write operations. Data may be written to CPU Memory, to the External Interface section, or to the Video system. For both RD and WR, MEMRQ and IORQ indicate whether data is read from or written to memory or an I/O device.

$\overline{\text{MACHINE CYCLE 1}}$ ($\overline{\text{M1}}$) identifies the instruction fetch machine cycle of an instruction's execution.

$\overline{\text{INTERRUPT REQUEST}}$ ($\overline{\text{IORQ}}$) is sent to the CPU from the Serial I/O Controller, the Counter Timer Circuit, or the Parallel I/O Controller. When $\overline{\text{IORQ}}$ is low, and an interrupt request has been generated by one of the peripheral ports, the MPU will service the device generating the interrrupt.

The $\overline{\text{RESET}}$ input to the Z80 MPU is used to reset and start the MPU after a power down or after the system RESET button is pushed.

When a low level is detected on the $\overline{\text{RESET}}$ line, the MPU starts execution of a routine to initialize the processor. The Program Counter, the Interrupt Vector, and the Memory Refresh Counter contents are all set to zero. Interrupt requests via the $\overline{\text{INT}}$ line are disabled and all tri-state bus signals (e.g., $\overline{\text{RD}}$ and $\overline{\text{WR}}$) are set to their high impedance states.

$\overline{\text{INT}}$ and $\overline{\text{NMI}}$ are two interrupt request inputs. The difference is that $\overline{\text{NMI}}$ has higher priority and cannot be disabled. The $\overline{\text{INT}}$ signal is received from the external interface section.

A low $\overline{\text{WAIT}}$ signal indicates that external logic cannot respond to a CPU access request within the allows time interval. The CPU then waits an intergral number of clock periods until the external logic has responded to a CPU access request.

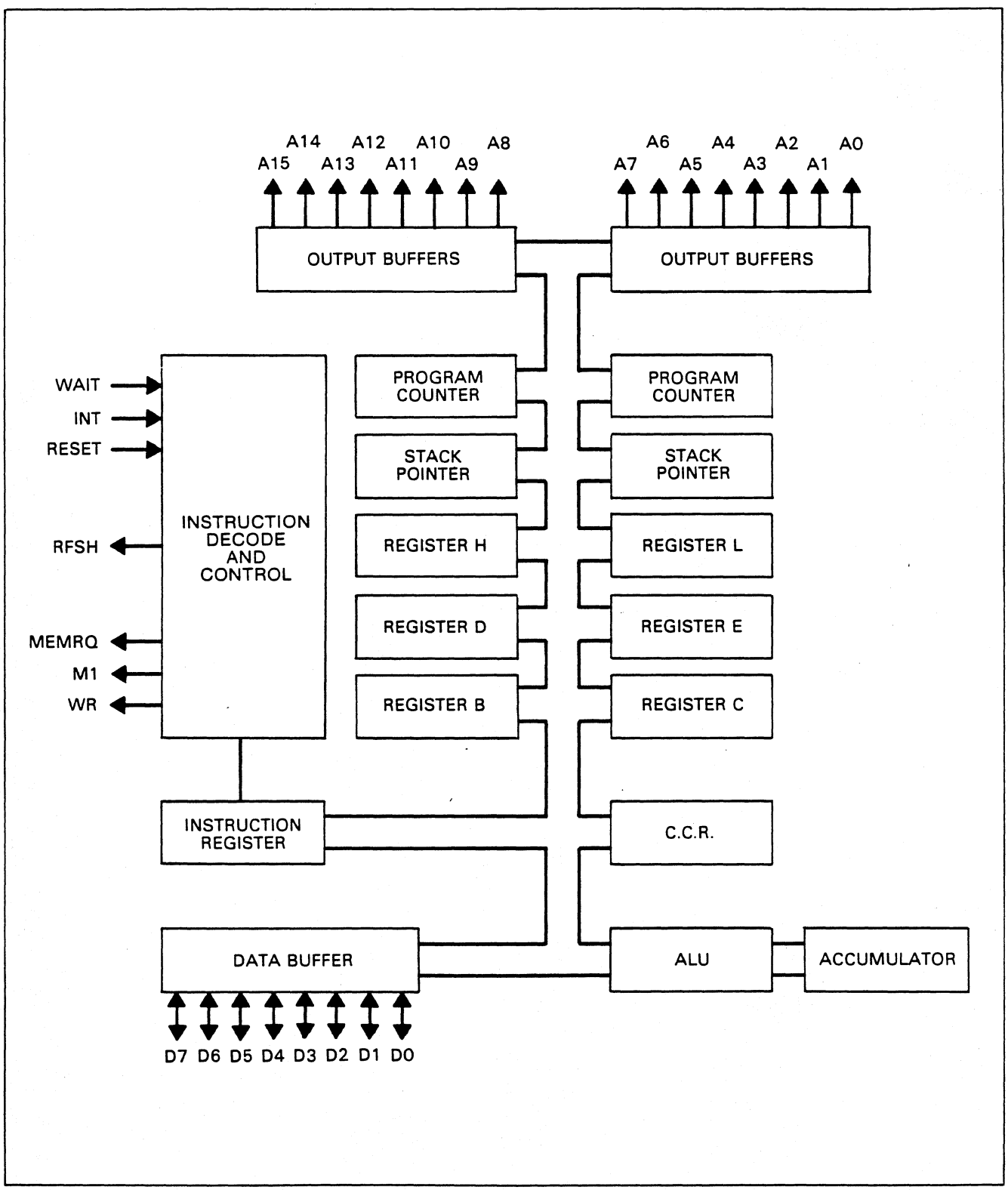


*Figure 4-3. Z80 MPU Block Diagram*

**Table 4-1. Chip Select Signals**

(Upper Nine Address Bits)

(1 = High, 0 = Low, X = Don't Care)

| SIGNAL | MEMORY ADDRESS | MEMRQ | MSB A15 | A14 | A13 | A12 | LSB A11 |
|---|---|---|---|---|---|---|---|
| MCS0 | | 0 | 0 | 0 | 0 | 0 | 0 |
| MCS1 | | 0 | 0 | 0 | 0 | 0 | 1 |
| MCS2 | | 0 | 0 | 0 | 0 | 1 | 0 |
| MCS3 | | 0 | 0 | 0 | 0 | 1 | 1 |
| MCS4 | | 0 | 0 | 0 | 1 | X | X |
| MCS5 | | 0 | 0 | 1 | 1 | X | X |

### 4.4.3 Address Decoder U58, U78 (Schematic P2)

The Address Decoder utilizes address lines A11-A15. MEMORY REQUEST (MEMRQ) goes low to enable the decoding of address lines A11-A15, resulting in chip select signals MCS0-MCS5. Chip select signals MCS0-MSC5 are sent to the Memory section.

The chip select signals are produced by the Address Decoder as shown in **Table 4-1.** These signals can be produced by different combinations of address lines A11-A15 if the jumpers at socket E3 are changed.

### 4.4.4 System Timing U19, U31, U41, U43 (Schematic P2 and P3)

The System Timing consists of the two oscillators, U41 and U43, Divide-by-Six Counter U31, and associated logic.

The Master Oscillator contains an oscillating quartz crystal which produces a signal that oscillates at 14.728 MHz.

This signal is routed to the Divide-by-Six Counter. The Divide-by-Six Counter produces MBAUD which is sent to the External Interface section and a system clock signal. The system clock signal is sent to the Memory section. The system clock is also inverted, resulting in signal 0. Signal 0 is the clock signal for the Z80 MPU. 0 is also sent to the External Interface section.

Signals COLMD and $\overline{\text{COLMD}}$ indicate whether 132 or 80 column rows have been selected. If 80 columns are selected, COLMD is high and the output of the Master Oscillator (14.728 MHz) is gated and sent to the clock input of binary counter U19 (÷9)as signal DCK. If 132 columns are selected, $\overline{\text{COLMD}}$ is high and the output of a 24.3 MHz oscillator is gated and sent to the clock input of a Divide-by-Nine binary counter (U19) as signal DCK. Signal DCK is inverted resulting in signal $\overline{\text{DCK}}$. The outputs of the binary counter are clock signals $\overline{\text{CCKB}}$, CCKC, and CCKD. Signals DCK, $\overline{\text{DCK}}$, CCDB, CCDC, and CCKD are sent to the Video section.

## 4.5 EXTERNAL INTERFACE SECTION DETAILED BLOCK DIAGRAM

A block diagram of the External Interface section is shown in **figure 4-4.**

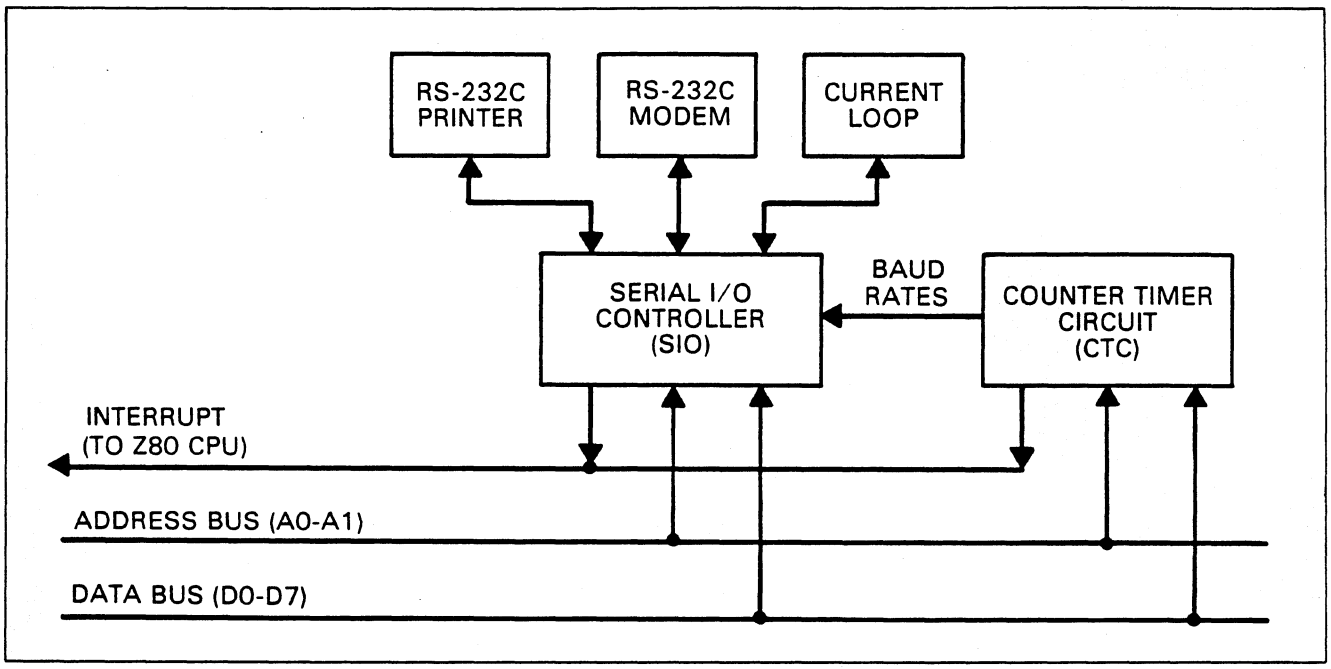


*Figure 4-4. External Interface Section Block Diagram*

## 4.5.1 External Interface Section Overview

The External Interface section controls the transfer of data between the **ADM 36** and the host computer or modem or other device.

Data to be transferred from the **ADM 36** through the two external interface ports is routed from the MPU to the Serial I/O over the Data Bus. The Serial I/O converts the data from parallel to serial form, then routes the data to the external interface ports.

Data from a host computer or modem is routed through the external interface ports and input to the Serial I/O. The Serial I/O converts the data from serial to parallel form, then places the data on the Data Bus to be routed to the CPU section.

The Z80 Clock Timer Circuit (CTC) controls the operation of the Serial I/O. The Clock Timer Circuit outputs three clock signals to the Serial I/O that control receive data, transmit data, for the Modem/CL and Printer ports.

## 4.5.2 Z80 Clock Timer Circuit U3 (Schematic P3)

The Z80 Clock Timer Circuit (CTC) contains four sets of counters that are programmed by Data Bus inputs D0-D7 from the CPU. The contents of the counters are sent to the CPU over the Data Bus when requested by the CPU. The outputs of the CTC are clock signals TXCA, RXCA, and TXCB, which control the baud rates as selected by the CPU. TXCA is the baud rate clock for data transmission to the modem. RXCB is tied to TXCB clock for transmission/reception for the printer. RXCA is the baud rate clock for data received from the modem. The CTC is enabled when chip select signal IOCS0 goes low.

The 0 clock signal from the CPU section is the clock signal for the CTC. MBAUD, from the CPU section, triggers each of the CTC's four counters. Address bits A0 and A1 select the counter to be accessed. Signals M1, IORQ, and RD control interrupt, write, and read operations for the CTC. The signal

**Table 4-2. Interrupt, Read, Write Control Signals**

| SIGNALS* | | | |
|---|---|---|---|
| $\overline{M1}$ | $\overline{IORQ}$ | $\overline{RD}$ | FUNCTION |
| 0 | 0 | 0 | Interrupt acknowledge. |
| 0 | 1 | 0 | Check for end of interrupt service routine. |
| 0 | 1 | 1 | Reset |
| 1 | 0 | 0 | Read from Unit to CPU. |
| 1 | 0 | 1 | Write from CPU to Unit. |

* All other combinations have no function.

combinations and the functions they control are listed in **Table 4-2.**

$\overline{INT}$ is the interrupt request received from the Z80 MPU.

The CTC has the highest interrupt priority. Signals IEI and IEO set up the priority. Interrupt input IEI is tied to +5V. Interrupt output IEO is applied to the IEI input of the Serial I/O thus establishing the Serial I/O as the second highest interrupt priority. $\overline{INT}$ is the interrupt request signal from the CTC to the CPU that is active when low.

$\overline{RESET}$ goes low when power is applied to the **ADM 36**. At $\overline{RESET}$, counter logic is stopped and $\overline{INT}$ goes high.

## 4.5.3 Z80 Serial I/O U4 (Schematic P3)

The Z80 Serial I/O (SIO) provides the data formatting and control necessary to the Z80 MPU in the **ADM 36** with serial asynchronous devices, such as a modem or printer. Interfacing through the MODEM and external interface ports, the SIO receives data from the external device over the RECEIVER (RXDA) line and transmits data to the device over the TRANSMIT (TXDA) line.

Serial data from the host computer (modem) is received by the SIO and RXDA, reformatted into parallel data and placed on the D0-D7 data bus lines for use by the MPU. Data to be transmitted is placed by the MPU on D0-D7 in parallel, then reformatted into serial form and sent to the computer over TXDA, and to the printer over TXDB.

The SIO is enabled when chip select signal $\overline{IOCS1}$ goes low.

The rate of reception/transmission by the SIO is controlled by the signals $\overline{TXCA}$, $\overline{RXCA}$, and $\overline{TXCB}$ from the Clock Timer Circuit.

Data reception and transmission is controlled by the host computer using a group of control and status signals which pass between the computer and the SIO through the MODEM port.

### Data Transmission Signals

When the computer (modem) is ready to receive data, the CLEAR TO SEND (CTSA) line at the MODEM port goes high. CTSA is inverted and used by the SIO to enable data transmission.

REQUEST TO SEND (RTSA) goes low and is sent to the MODEM port when the **ADM 36** is

ready to transmit data to the computer. A secondary REQUEST TO SENT ($\overline{RTSB}$) is also sent to the MODEM port.

In addition to RTSA, the DATA TERMINAL READY ($\overline{DTRA}$) line is set to a low level to control the switching of the computer (modem) to the data channel used by the **ADM 36**. $\overline{DTRB}$ is set low and sent to the PRINTER port to prepare the printer for receiving data from the **ADM 36**.

Data is transmitted to the computer (modem) over TXDA. As long as the computer (modem) is receiving a clear and correct signal, DATA CARRIER DETECT (DCDA) at the MODEM port is held high. DCDA is inverted and sent to the SIO as $\overline{DCDA}$. $\overline{DCDA}$ is used by the SIO as an indication that transmit data is being sent.

### Data Reception Signals

Data reception through the MODEM port using the SIO requires essentially the same control and status signals as for data transmission. The principle exception is that data originates at the computer or current loop device and is received at the MODEM port over RXDA.

### Printer Operations

The PRINTER port functions of the SIO are essentially the same as those of the modem. The only differences are the signals used for controlling or expressing the status of data transmission and reception.

The signal RXDS is used to receive data from the printer. TRANSMIT (TXDB) is used to transmit data from the SIO to the printer.

The control signals CLEAR TO SEND ($\overline{CTSB}$), DATA TERMINAL READY ($\overline{DTRB}$), and DATA CARRIER DETECT ($\overline{DCDB}$) are used to control data transmission and reception between the SIO and the printer. These signals have the same function as the corresponding MODEM port signals.

### Control Signals

Address bits A0 and A1 select the internal SIO data or control buffer to be accessed.

The 0 clock is the clock signal for the SIO. Signals M1, IORQ, and RD control interrupt, write, and read operations for the SIO as shown in **Table 4-2.**

Interrupt input signal IEI is received from the CTC and IEO is sent to the Parallel I/O thus establishing the SIO as the second highest interrupt priority.

$\overline{INT}$ is the interrupt request received from the Z80 MPU.

$\overline{RESET}$ initializes SIO operations.

## 4.5.4 MODEM Port J7 (Schematic P3A)

The MODEM port, associated logic, and the SIO control the transfer of data between the **ADM 36** and a host computer or optional internal modem.

C1 and C2 are used to control the modem port. See **Table 4-3** for signal combinations and functions.

The modem receives serial data from the SIO over the MODEM TRANSMIT (MTXD) line and receives over the MODEM RECEIVE (MXRD) line.

Serial data from the modem is received by the SIO over MXRD, reformatted into parallel data and placed on the D0-D7 data bus lines for use by the MPU. Data to be transmitted is placed by the MPU on D0-D7 in parallel, then reformatted into serial form and sent to the modem over MTXD.

The MODEM CLEAR TO SEND (MCTS) line goes high when the modem is ready to receive data.

As long as the modem is receiving a clear and correct signal, MODEM DATA CARRIER

**Table 4-3. Modem Port Controls**

| LINE C1 | C2 | FUNCTION |
|---|---|---|
| 0 | 0 | Analog loop back |
| 0 | 1 | Digital loop back |
| 1 | 0 | Modem mode |
| 1 | 1 | Off state (normal state) |

DETECT (MDCD) and the modem port is held high. MDCD is inverted and sent to the SIO as $\overline{DCDA}$. $\overline{DCDA}$ is used by the SIO as an indication that transmit data is being sent.

## 4.6 MEMORY SECTION DETAILED BLOCK DIAGRAM

A block diagram of the Memory section is shown in **figure 4-5.**

### 4.6.1 Memory Section Overview

The Memory section contains the system scratchpad memory, **ADM 36** control program, and system configuration information.

The MPU reads data from the Memory section by selecting a memory chip with the chip select signals produced by the CPU section, then placing the address of the memory location to be accessed to the Address Bus. The data from the memory is placed on the Display Memory Bus (DM0-DM7) to be routed to the MPU.

The MPU places data in the RAM by selecting the RAM chip, placing the address of the location where data is to be written on the address bus and routing and data to be placed in the memory to the Display Memory bus over DM0-DM7.

The Parallel I/O (PIO) provides I/O communications between the CPU,

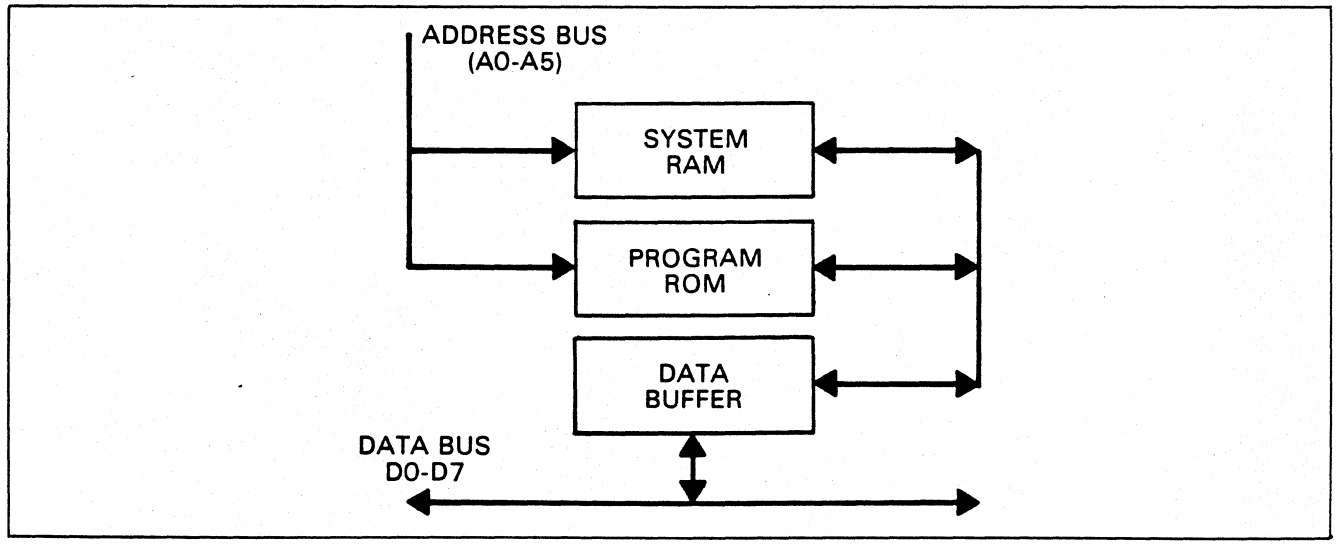


*Figure 4-5. Memory Section Block Diagram*

Keyboard, and Electronically Alterable ROM (EA ROM). The EA ROM provides data to the PIO at **ADM 36** power turn on that is sent to the CPU over the Data Bus. This data indicates what attributes were selected when power as last applied to the **ADM 36**.

Socket positions U71-U76 can accommodate either RAM or ROM chips. Jumpering to pin 23 selects signal $\overline{WRM}$ for RAM chips, bit ALL for 4K or 8K chips or +5V for 1K or 2K chips. For this discussion, we will refer to a standard configuration of a 2K RAM in U76 and 2K ROMs in U71-U75.

### 4.6.2 2Kx8 ROMs U71-U75 (Schematic P6)

The five 2Kx8 ROMs contain the **ADM 36** control program and other related firmware.

Each ROM chip is enabled by MCS0, MCS1, MCS2, MCS3, or MCS4, which are produced by MEMRQ and A11-A15 as shown in **Table 4-1.**

When the selected ROM chip is enabled, the data from the address specified by A0-A10 is placed on Display Memory Bus DM0-DM8.

### 4.6.3 2K RAM U76 (Schematic P6)

The 2K RAM is used for temporary data storage, scratchpad memory, input and output data buffers. Typically, temporary data storage and scratchpad memory operations take place in this memory.

The RAM chip, enabled when chip select $\overline{MCS5}$ goes low, has eight lines of bidirectional data. Display Memory bits DM0-DM7 are routed to and from the RAM.

A data read or data write operation is specified for each RAM by the signals $\overline{RD}$ or $\overline{WRM}$.

If $\overline{RD}$ is low (indicating a read operation), data is read from the location specified by A0-A10, placed on DM0-DM7 and routed to the Data Bus.

If WRM is low (indicating a write operation) data from DM0-DM7 is written to the RAM address specified by A0-A10.

RFSH, when low, refreshes the dynamic RAM.

### 4.6.4 Memory Buffer U60 (Schematic P2)

The Memory Buffer transfers data from the Memory section to the CPU during read operations and transfers data from the CPU to the Memory section during write operations.

During read operations, signal $\overline{RD}$ goes low. This enables the flow of data from the Memory section over Display Memory bits DM0-DM7 through the buffer to Data Bus D0-D7. Data from the Video RAMs also flows from DM0-DM7 to D0-D7 during the read cycle.

Data flow is reversed during the write cycle. At this time, $\overline{RD}$ goes high causing data to flow from D0-D7 to DM0-DM7. This data can be sent to the Memory RAM or the Video RAM.

### 4.6.5 Parallel I/O U29 (Schematic P3)

The Parallel I/O (PIO) receives information from the Keyboard, EA ROM, and the CPU. The PIO outputs data to the Keyboard, EA ROM, CPU, and the Video section.

The PIO is enabled when chip select signal $\overline{IOCS2}$ goes low. Data bus lines D0-D7 transfer bidirectional data between the PIO and the CPU. Data from the CPU is placed in the control and data buffers of the PIO. Data from the Keyboard and EA ROM is sent to the CPU over D0-D7. Data that is placed in the data buffers by the Data Bus is output to the Video Section and EA ROM under program control. Data sent to the control buffers controls the operation of the SIO.

The following control signals are sent to the PIO.

Address bits A0 and A1 select the internal PIO data or control buffer and the A or B ports.

The 0 clock is the clock signal for the PIO.

Signals $\overline{M1}$, $\overline{IORQ}$, and $\overline{RD}$ control interrupt, write, and read operations for the PIO as shown in **Table 4-2.**

Interrupt input signal IEI, received from the Serial I/O, establishes the PIO with the lowest priority interrupt.

$\overline{INT}$ is the interrupt request received from the CPU.

The PIO receives and transmits the following data.

EA ROM DATA INPUT (EADI) provides selected personality and video attribute data to the EA ROM.

BRIGHTNESS PULSE (BRI), CURSOR BLINK (CRBK), FOREGROUND BLINK (FDBK), and block or line cursor (CURMD) are sent to the Video section.

VERTICAL CYNC (VSYN) provides vertical sync information from the Video section.

KEYBOARD SERIAL IN (KSI) provides serial data from the Keyboard.

KEYBOARD SERIAL OUT (KSO) outputs information to the Keyboard section.

$\overline{DSRA}$ is a DATA SET READY signal received from the modem that indicates that the computer is ready to receive data.

EAC1, EAC2, and EAC3 are control signals for the EA ROM.

EACK is an acknowledgement for the EA ROM and provides a 14 KHz clock signal.

EADO is the EA ROM DATA OUTPUT that is received from the EA ROM when power is turned on.

The 132/$\overline{80}$ signal indicates which size column display has been selected. If 80 columns is selected, 132/$\overline{80}$ goes low presetting JK flip-flop U40, thus setting COLUMN MODE (COLMD) high. If 132 columns has been selected, the 132/$\overline{80}$ signal goes high, and a high is clocked through the JK flip-flop by clock pulse CPCLK thus setting $\overline{COLMD}$ high.

### 4.6.6 Electrically Alterable ROM U16 (Schematic P3)

The Electrically Alterable ROM (EA ROM) stores information received from the EA ROM DATA INPUT (EADI). This is serial data that provides information on personality and video attributes that have been selected by the operator. The EA ROM is clocked by a 14 KHz signal EACK. Signals EAC1, EAC2, and EAC3 control the EA ROM operation. When **ADM 36** power is turned on, EA ROM DATA OUTPUT (EADO) is sent to the PIO, thus providing data on the personality and video attributes that were selected at the time the **ADM 36** power was turned off.

A voltage doubler provides -23V to the EA ROM while data is being sent to the ROM.

## 4.7 KEYBOARD SECTION DETAILED BLOCK DIAGRAM

The Keyboard section contains the logic necessary to interface the keyboard with the **ADM 36**. A block diagram of the Keyboard section is shown in **figure 4-6.**

### 4.7.1 Keyboard Section Overview

The keyboard contains an F3870 microcomputer which sends serial data to and receives serial data from the Parallel I/O Controller U29 in order to communicate with the rest of the **ADM 36** system. The F3870 scans the keyboard matrix in order to determine valid sequences of user input.

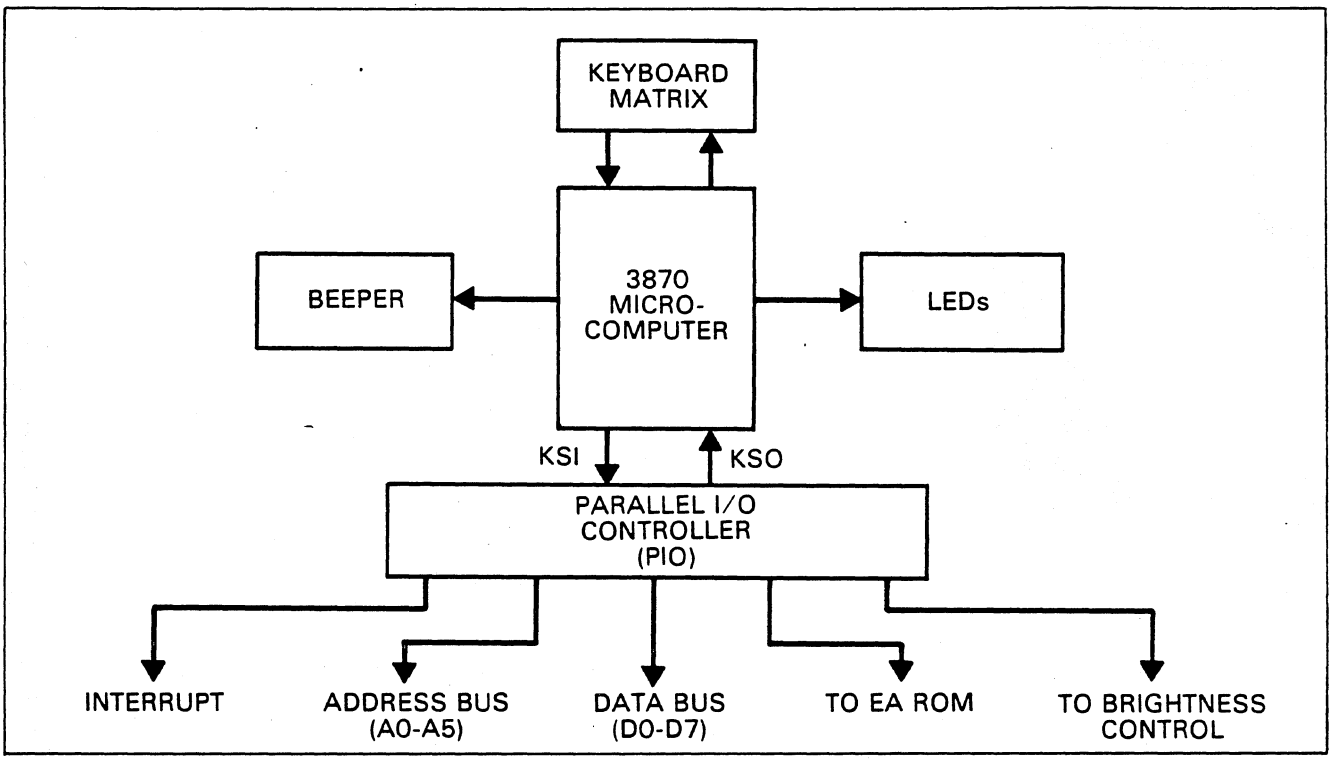


*Figure 4-6. Keyboard Section Block Diagram*

The F3870 permits as many as three keys in the keyboard matrix to be depressed at the same time in order to allow the user 3-key "rollover" from one key to the next.

The Keyboard section also contains a warning beeper and six LEDs which inform the user of the current status of the **ADM 36**.

## 4.7.2 F3870 Microcomputer U2 (Keyboard Schematic)

The F3870 provides the logic and control necessary to interface the keyboard with the **ADM 36** PIO.

The F3870 strobes lines P0-P7 and P14-P17 by sending a +5V pulse through them. Lines P5-P7 are read in order to identify whether a key has been depressed. If a key is read for a least two scan cycles, the key is identified and the hexadecimal ASCII value for that key is sent to the PIO in serial format. The F3870 allows a key to be read while another key is still depressed. This provides key "rollover" for the user. However, if more than three keys are detected during the same scan cycle, the F3870 will disregard the keyboard reading.

Lines P10-P12 control the SHIFT, CAPLOCK, and CTRL keys, respectively.

Lines P40-P46 control six LEDs contained on the **ADM 36**. When lit, these six LEDs indicate a certain status for the **ADM 36**. P40 indicates when the **ADM 36** is ON-LINE (e.g., with the computer). P41 controls the KEYBOARD LOCKED LED. The lines P42-P46 is user programmable.

$\overline{\text{REST}}$ ($\overline{\text{RST}}$) reinitializes the F3870 when the line goes low.

Line P45 is connected to a bell which can be programmed to beep, by the user. The bell also sounds at certain significant times such as power-up.

Lines XTL1 and XTL2 are connected to an oscillating quartz crystal which produces a signal that oscillates at 3.58 MHz.

EXT receives serial data from the DATA IN line which connects the Parallel I/O Controller and the F3870.

P47 transmits serial data to the DATA OUT line which connects the PIO and the F3870.

### 4.7.3 Keyboard Matrix (Keyboard Schematic)

The Keyboard Matrix contains the 80 **ADM 36** key switches which generate the codes for alphabetic, numeric, symbol, and control characters.

## 4.8 VIDEO SECTION DETAILED BLOCK DIAGRAM

The Video section controls the data displayed by the **ADM 36** CRT monitor. A block diagram of the Video section is presented in **figure 4-7.**

### 4.8.1 Video Section Overview

The Video section consists of a Video Timing and Controller (VTAC), Address Translator, Address Select Multiplexer, 8K of Display RAM, Display RAM Buffer and Data Latch, Character Generator, Video Logic, and a CRT Monitor.

Data used to control the operation of the VTAC is routed to the VTAC over D0-D7 and A0-A3.

The VTAC formats the display data and generates the signals HORIZONTAL SYNCHRONIZE (HSYN), VERTICAL SYNCHRONIZE (VSYN), and COMPOSITE SYNCHRONIZE (CSYN), which are routed to the Video Logic.

The formatted display data in row/column form is presented to the Address Translator and converted to linear form. The linear data is then routed to the Address Selector. From the Address Selector, the data is used as address inputs to the Display RAM. Data from the Display RAM is either routed to the MPU via the Data Bus or sent to the Character Generator.

The Character Generator retrieves the data needed to display the character on the CRT screen and sends it to the Video Logic where it is conditioned to be displayed on the CRT monitor.

### 4.8.2 Video Timing and Controller U38 (Schematic P4)

The Video Timing and Controller (VTAC) is an MPU programmable device which contains logic necessary to generate timing signals and perform data formatting operations for the CRT monitor.

The VTAC contains registers that are used to hold such information as the line count, characters per data row, data rows per frame, raster scans per row, and raster scans per frame. The MPU places data in these registers by addressing the internal registers using A0-A3, selecting the CRT Controller using VTAC, placing the data to be stored in the address register on D0-D7, and strobing the data into the register when $\overline{DS}$ goes low.

The nine interface resisters contain the following information:

| CHARACTERISTIC | VALUE |
|---|---|
| Char/Line | 102 |
| Char/Data Row | 80 |
| Scan/Data Row | 12 |
| Data Row/Frame | 25 |
| Scan/Frame | 320 (60 Hz), 384 (50 Hz) |

The character address outputs H0-H7 from the VTAC are routed to the Address Translator where they are converted from a row/column form to a linear form. Character address bits CA0-CA3 are routed to the Address Selection Mux.

The CENTRAL PROCESS CLOCK (CPCLK) is the clock signal for the VTAC.

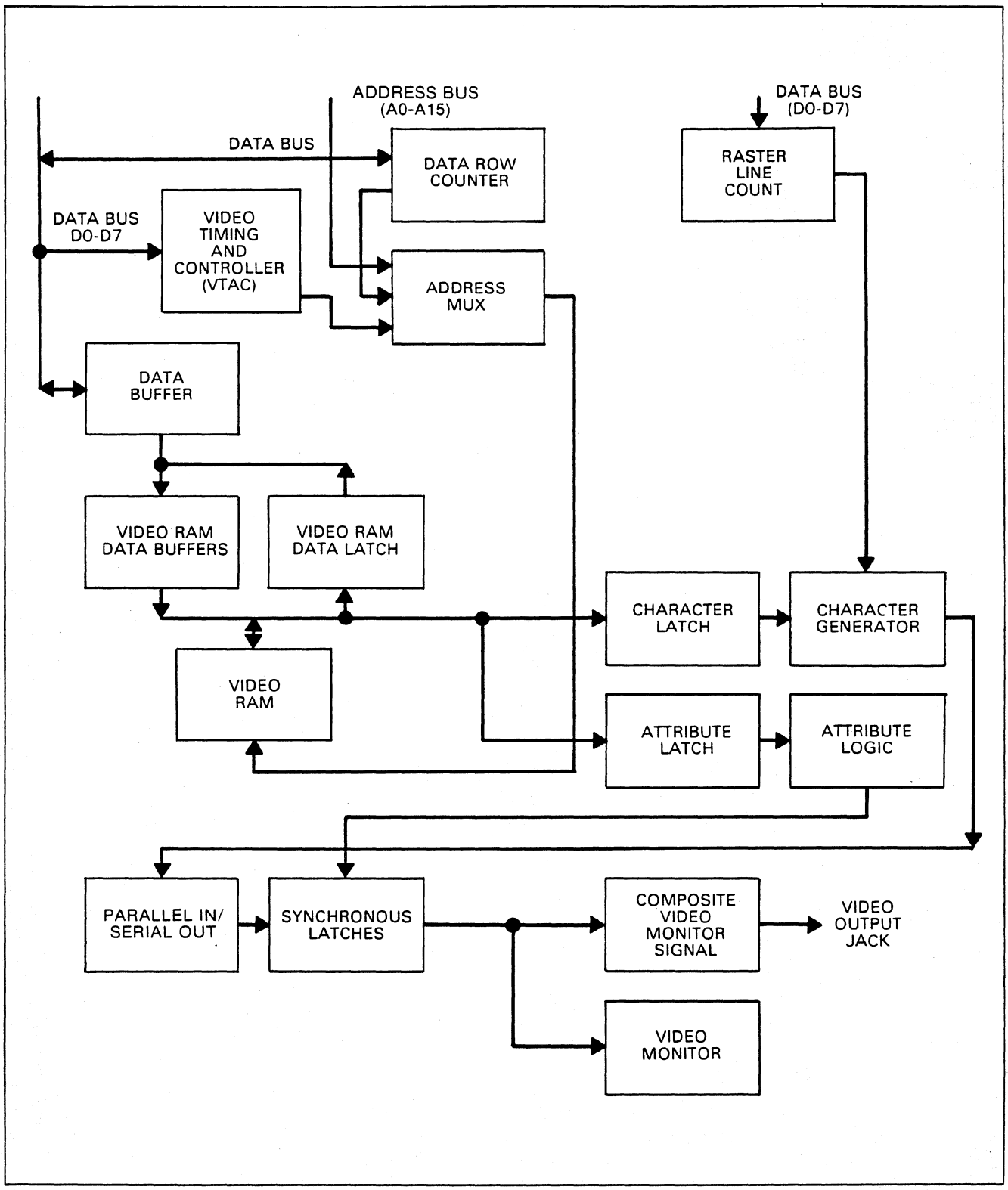


*Figure 4-7. Video Section Block Diagram*

CURSOR (CRV) is the Cursor Video signal and defines the cursor location in the CRT data field.

HORIZONTAL SYNCHRONIZE (HSYN - 15.7 KHz) and VERTICAL SYNCHRONIZE (VSYN - 50 or 60 Hz) operation initiate the horizontal and vertical retrace of the CRT screen. BL is a blanking signal.

### 4.8.3 Address Translator U49, U50 (Schematic P4)

The Address Translator block contains two 4-bit adders (U49 and U50) which change the Display RAM addresses from the row/column form produced by the VTAC to the linear form used by the Address Selector Mux.

### 4.8.4 Address Selection Mux U39, U59, U77 (Schematic P4)

The Address Selection Mux selects the source of the address used to retrieve data from the Display RAM.

The Mux receives as inputs H0-H3, the output from the Address Translator, and A0-A11 from the Address Bus.

If the select signal is high, A0-A11 are placed on SA0-SA9 and routed to the Display RAM. If the select signal is low, the output from the Address Translator and H0-H3 are placed on SA0-SA9 and routed to the Display RAM address.

### 4.8.5 Video RAM U80-U84, U66-U69 (Schematic P6B)

The Video RAM contains the data that is displayed on the CRT screen.

There are eight 1Kx8 RAMs in the Video RAM array. Each RAM has eight bidirectional lines. The RAM array is divided into two sets of four RAMs. One set provides RAM space for the screen data and the other set provides RAM space for the screen character attributes.

The attribute set of RAMs U81-U84 is selected when SCREEN WRITE ENABLE F ($\overline{\text{SWEF}}$) is low. The data set of RAMs U66-U69 is selected when SCREEN WRITE ENABLE E ($\overline{\text{SWEE}}$) is low. Screen address bits SA0-SA9 are used to address each RAM in the Display RAM block.

SCREEN MEMORY CHIP SELECT (SCS0-SCS3) are used to select the particular RAM that is being written to or read from. A RAM is selected when one of the SCS signals goes low.

The set of RAMs U81-U84 stores attribute information regarding the video character such as whether the character should be underlined, should blink, should be reversed, etc. This information is received and transmitted on SCREEN MEMORY DATA lines SD8-SD15. The set of RAMs U66-U69 stores the ASCII value of the character that is to be displayed. U66-U69 receive and transmit data on SD0-SD7.

Information is written to Display Memory when $\overline{\text{SWEE}}$ and $\overline{\text{SWEF}}$ are low.

The Display RAM writes data to the Attribute Latch and the Video Latch when SCREEN OUTPUT ENABLE ($\overline{\text{SOE}}$) is low.

### 4.8.6 Display RAM Buffer U64, U80 and Latch U65, U79 (Schematic P4)

The Display RAM Buffer and Latch are used to transfer data between the Display RAM and the Display Memory Bus (DMBUS).

Display RAM Buffer U80 and Latch U79 pass data between DM0-DM7 and SD8-SD15. Data RAM Buffer U64 and Latch U65 pass data between DM0-DM7 and SD0-SD7.

SCREEN WRITE DATA ENABLE F ($\overline{\text{SWDEF}}$) enables Display RAM Buffer U80 when it is low. Latch U79 is enabled when SRDCSF is low.

SCREEN WRITE DATA ENABLE E

(SWDEE) enables Display RAM Buffer U64 when it is low. Latch U65 is enabled when line SRDCSE is low.

### 4.8.7 Attribute Latch U70 and Video Latch U57 (Schematic P4)

The Attribute Latch U70 receives data regarding a character's attributes (e.g., brightness, underline, field blink, etc.) from the Display Memory on lines SD8-SD15. These attributes are then passed to the Video Logic over lines VD8-VD11 and VD13-VD15 in order to build a composite video signal.

The Video Latch U57 receives the ASCII value of the character from the Display Memory on lines SD0-SD7. This ASCII value is then passed to the Character Generator over Video Data Bit lines VD0-VD7.

### 4.8.8 Character Generator U56 (Schematic P5)

The Character Generator consists of an EPROM which is programmed with the 128 upper and lower case displayable characters in the ASCII code.

The character to be displayed is specified by the inputs VD0-VD7 produced by the Video Latch U57. The raster line count is specified by R0-R3 and R0.

The Character Generator uses VD0-VD7 and R0-R3 and R0 as address inputs and outputs the appropriate set of parallel dots on lines D0-D7 which are routed to the Video Logic.

The Character Generator is enabled when $\overline{OE}$, produced by the Video Logic, is set low.

### 4.8.9 Video Logic (Schematic P5)

The Video Logic conditions the data containing the character to be displayed, character attributes, and display attributes into the signal VIDEO which is displayed on the CRT.

The HDRIVE (HDR) and VDRIVE (VDR) are routed to the CRT via connector J5.

Information produced by the Character Generator is routed to the Video Logic over D0-D7. This information is latched into the shift register (chip U47) when SHIFTER LOAD (S/L) is high. S/L is generated by clock pulse COUNTER CLOCK D (CCKD). From the shift register, the data is clocked out at a rate determined by DOT CLOCK (DCK) and used to produce VIDEO.

VIDEO DATA BIT 8 (VD8), when high, indicates that the character that is displayed is to be underlined.

FIELD REVERSE (FLREV), when high, indicates that the character field is to be reversed.

VIDEO DATA BIT 13 (VD13), when high, causes a reduced intensity of the character on the screen.

FIELD BLINK (FDBK) controls the field blink of the character. The actual blinking is set by field blink (VD10).

VIDEO DATA BIT 11 (VD11) when ON, causes the character to be bold.

BRIGHTNESS (BRI) controls the character's brightness on the video screen.

# SECTION V
# MAINTENANCE

## 5.1 INTRODUCTION

This section contains information and instructions for performing routine and corrective maintenance for the **ADM 36**.

The maintenance technician should be thoroughly familiar with the information contained in **Sections 1-4** of this manual before attempting to perform any of the procedures outlined in this section.

## 5.2 PREVENTIVE MAINTENANCE

The only preventive maintenance required on the **ADM 36** is the occasional cleaning of the exterior surfaces and periodic visual inspections.

The **ADM 36** casing should be cleaned using a household cleaner and a paper towel or soft, lint-free cloth. NEVER use lighter fluid or other petroleum-based solvents to clean the casing. Damage to the plastic or painted surfaces could result. In addition, avoid wiping dust into the keyboard and do not let spray cleaner run between the keys.

## 5.3 CORRECTIVE MAINTENANCE

This section contains information for performing corrective maintenance on the **ADM 36** Display Terminal.

### 5.3.1 Problem Identification

When it is determined that the **ADM 36** is not functioning correctly, the following procedures and the procedures shown in **Table 5-1** should be followed:

1. Determine the state of the machine when the fault occurred. Check for operator error, blown fuses, loose connectors, and modem or computer failure. Failure is often caused by one or more of these items.
2. Check +5V on main PCBA. This voltage is critical and must be set between +4.95V and +5.00V.
3. Operate the **ADM 36** disconnected from the CPU, with a wrap-around plug (with pins 2 and 3 tied together) installed on the MODEM port, to determine which function has failed. Check all functions, including the transmission of characters to ensure proper operation. If the unit functions properly, check interface cabling, modem, and CPU for malfunction.
4. Isolate the cause of the failure to a specific module such as the keyboard assembly, CRT, or main PCBA.
5. Perform the required adjustments or replace the malfunctioning module.
6. If the main PCBA is being replaced, compare all options and switches with the old PCBA to ensure that the new PCBA is configured the same.
7. Many of the troubles described in **Table 5-1** may be caused by power supply malfunctions. **Table 5-2** is provided to aid in determining whether the power supply is the cause of trouble. Removal and replacement of the power supply is the only recommended action.

## Table 5-1. ADM 36 Troubleshooting Guide

| SYMPTOM | POSSIBLE CAUSE | ACTION |
|---|---|---|
| Terminal will not power up. | No AC power to terminal. | Check power connection to wall receptacle. |
| | Fuse blown. | Replace fuse. |
| Monitor dark or cursor does not appear in upper left corner of screen after 20 second warm-up period. | Video screen not properly adjusted or faulty monitor board. | Press HOME key. Enter set-up mode and adjust brightness control. |
| | Main PCBA. | Check cable connections between monitor and main PCBA. |
| | | Check and adjust +5V. |
| | | Replace monitor board. |
| Character entered from keyboard not displayed on CRT screen. | Faulty keyboard switch. | Check operation of key. If necessary, remove and replace key switch contacts. |
| | | Check for foreign material between keys. |
| | | Check and adjust +5V. |
| Video flashes on screen intermittently; resets. | +5V not adjusted properly. | Adjust +5V power supply. |
| Display not vertically aligned on screen. | Video screen vertical drive improperly adjusted. | Perform vertical adjustments described in paragraph 5.4.3. |
| Display not horizontally aligned on screen. | Improper horizontal adjustment. | Perform horizontal adjustments described in paragraph 5.4.4. |
| Display out of focus. | Focus control incorrectly adjusted. | Adjust focus as outlined in paragraph 5.4.5. |
| Raster improperly centered. | Ring magnets incorrectly adjusted. | Follow procedures outlined in paragraph 5.4.6. |

## Table 5-1. ADM 36 Troubleshooting Guide (continued)

| SYMPTOM | POSSIBLE CAUSE | ACTION |
|---|---|---|
| Editing functions not working. | Possible CPU malfunction. | Check and adjust +5V.<br>Replace main PCBA. |
| Terminal will not transmit or receive data. | Malfunctioning power supply or modem. | Check and adjust +5V.<br>Check modem operation.<br>Check operation of host computer. |

## Table 5-2. ADM 36 Power Supply Troubleshooting Guide

| TROUBLE | PROCEDURE |
|---|---|
| **WARNING**<br>*Dangerous voltages are present on the heat sink of the* **ADM 36** *Power Supply. Extreme care should be exercised if the shock hazard shield over the power supply is removed while power is on.* | |
| No output from any of the four supplies. | Check power cable connections, input fuse. |
| Fuse blows again after being replaced. | Check for shorted switch Q1; if shorted, Q3 is probably bad also.<br>Check diode CR10; if bad, Q1 and Q3 are probably bad also.<br>Check for short in tranformer T1. |
| No output from one of the four supplies. | Check for open output rectifier CR5, CR6, CR7, CR8. |
| Low output, all supplies. | Check for shorted output rectifier CR5, CR6, CR7, CR8.<br>Check Post Regulator circuit.<br>Check Opto-Isolator A2.<br>Check potentiometer R13. |

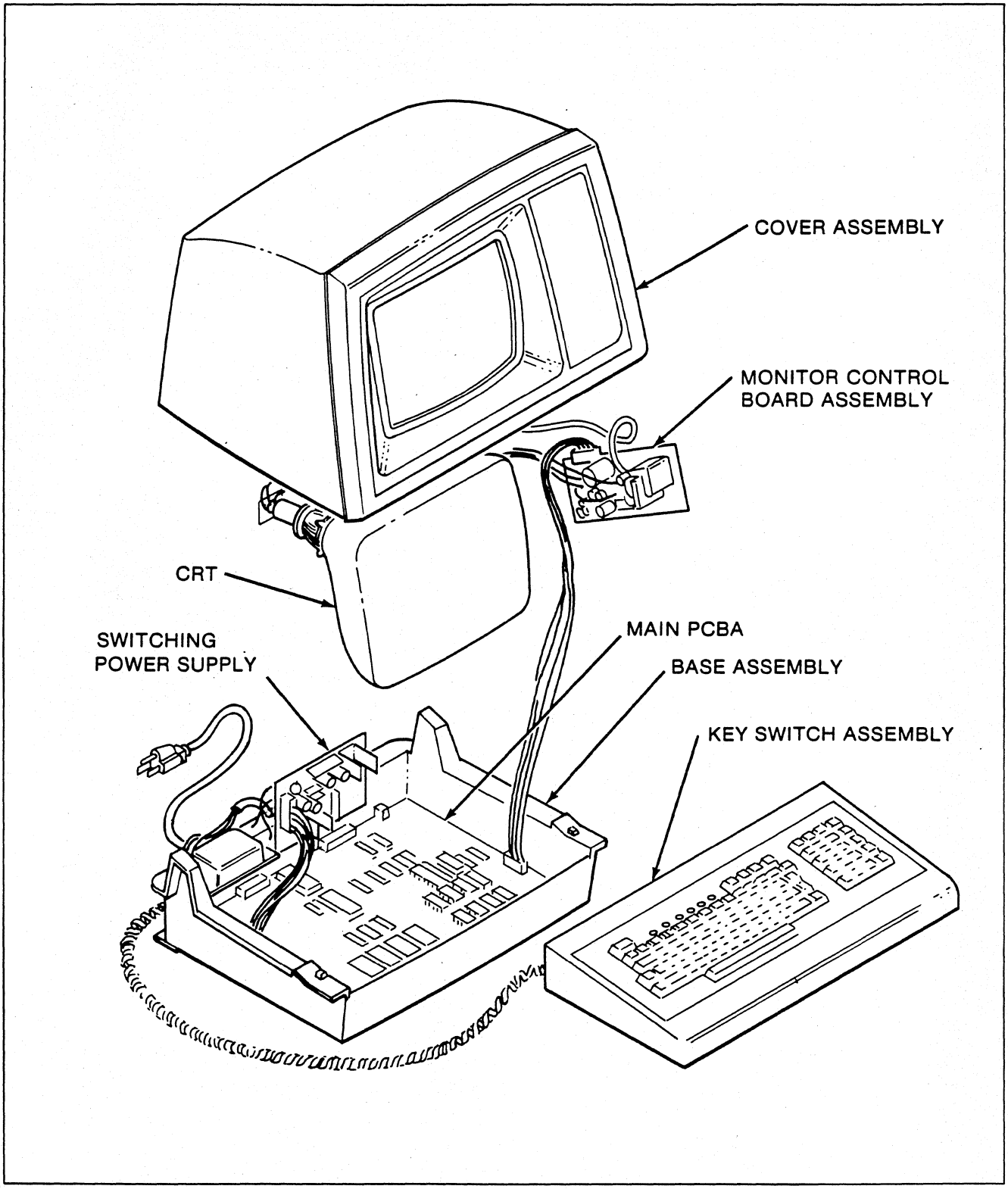


*Figure 5-1. Location of Principle ADM 36 Assemblies*

## 5.3.2 Removal and Replacement

**Opening ADM 36 Cover** (see **figure 5-1**)

1. Remove the two phillips-head screws located on the bottom of the terminal base.
2. Disconnect the external interface connection(s) at the rear of the **ADM 36**.
3. Lift the cover upwards and rearwards from the front until it is lowered to rest on the table.
4. To remove the cover, disconnect the cable connecting the main PCBA to the monitor. Slide the cover toward the left until it is free of the hinge pins, then lift the cover from the base.

Note that the cover should not be removed for adjustments required on the **ADM 36**.

**Removing the Main PCBA**

1. Remove the external interface connection(s) at the rear of the **ADM 36**.
2. Open the terminal cover.
3. Remove all cable connectors from the upper surface of the circuit board.
4. Remove screw from center of main PCBA and unlatch plastic locks at front end of logic board by pressing towards front of terminal.
5. Lift the board upwards and pull it forward until the RS-232 connectors clear the back housing, then lift the board out of the base.

To replace the main PCBA, perform the above procedures in the reverse order.

**Removing and Replacing Key Switch Assembly** (Futaba Keyboard)

For this section, refer to **figure 5-2**.

The tools required to remove the key switch assembly from the keyboard are:

- Soldering iron (low temperature)
- Solder sucker or wicking device
- Small flatblade screwdriver

To remove the key switch, follow the directions below:

1. Remove the keyboard from the housing.
2. Remove the solder from the three contacts (dewick) with a low heat soldering iron so as not to damage the circuit pads. The contacts will protrude about 1/32 inches beyond the back of the keyboards. Make sure that the contacts are completely free of any solder by brushing them with your finger. The contacts should move freely.
3. Turn the keyboard over so that the keyboard is up.
4. Use the small flat screwdriver to disengage the four plastic retaining clips inside the key assembly.
5. Remove key assembly.

Instructions for key switch installation are as follows:

1. Insert a new key assembly.
2. Turn the keyboard over so that the solder side is up.
3. Solder the three contacts into place with a low heat soldering iron.
4. Turn the keyboard over so that the keyboard is up and install the keycap.
5. Install the keyboard into the keyboard housing.

**Removal and Replacement of the Monitor**

The CRT with its steel mounting frame, the flyback assembly, and the circuit board comprise what is known as the **ADM 36** monitor.

**WARNING**

*Discharge anode voltage to ground before attempting to remove the CRT, the flyback assembly, or the circuit board.*

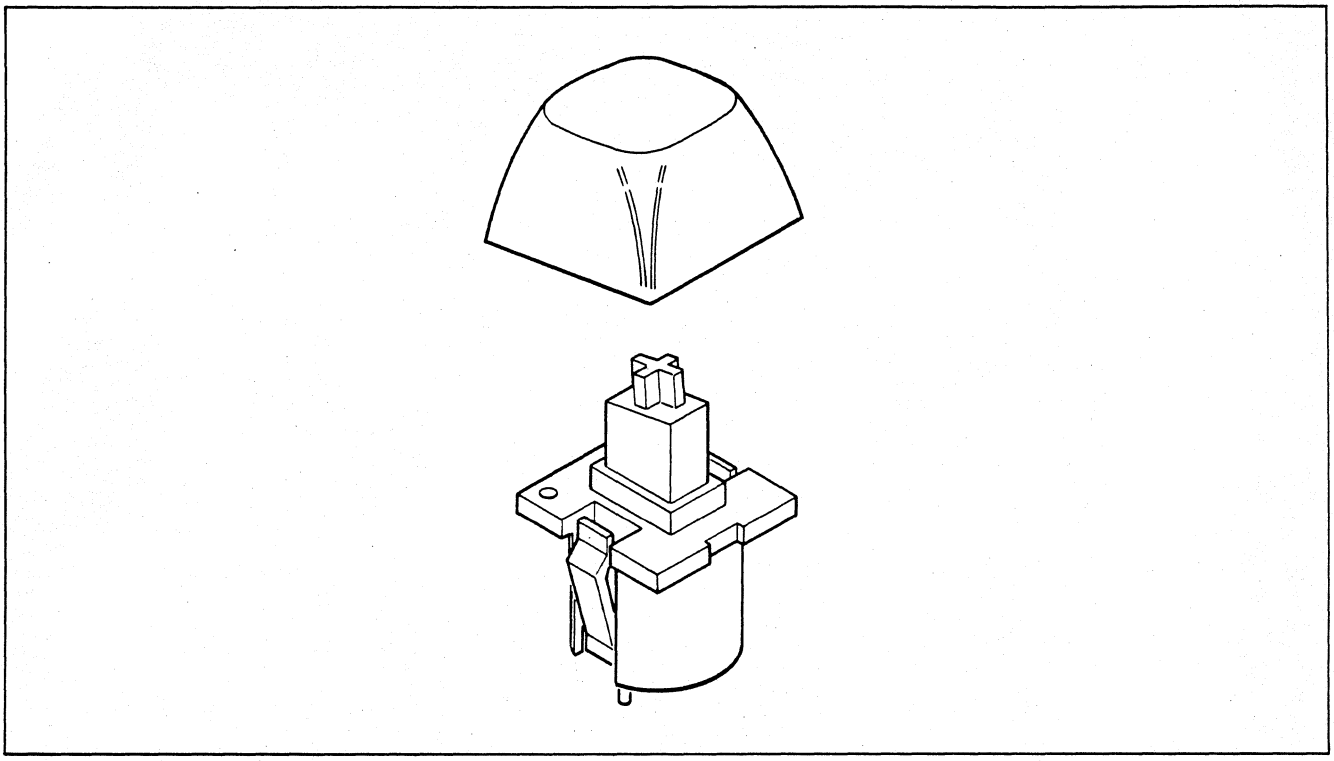

*Figure 5-2. Futaba Key Assembly*

To remove the CRT, proceed as follows:

1. Disconnect the black ground wire on the left side of the CRT.
2. Remove the connector from the base of the CRT.
3. Remove the anode connector from the right surface of the CRT.
4. Using a socket wrench, remove the four screws on the sides of the CRT. Support the CRT with your hand while removing the last two screws.

To install a new CRT, perform the above steps in reverse order.

Follow the steps below in order to remove the flyback assembly.

1. Disconnect the anode connector from the CRT.
2. Disconnect the Molex connector that connects the flyback assembly to the monitor circuit board.
3. Use a 1/4-inch socket to loosen the hex-head screw that clamps the flyback assembly to the MCB mounting plate.
4. Lift the flyback assembly upwards until the screw clears the slot in the mounting plate. Remove the assembly from the cover.

**CAUTION**

*When installing a new flyback assembly, be sure the diode is installed with the white ring end towards the CRT.*

To install a new flyback assembly, perform the above steps in reverse order.

### Removal and Replacement of the Monitor Control Board Assembly (PCBA)

Removal of the monitor control/board is as follows:

1. Disconnect the **ADM 36** from the power source and remove the external interface connection(s) at the rear of the **ADM 36.**
2. Open the **ADM 36** cover by loosening the two phillips-head screws at the front corners of the terminal base and lifting the cover upwards and rearwards. Rest the corner on the table or desk.
3. Remove the power supply cable and monitor cable connections in the upper surface of the main PCBA.
4. Remove the two screws holding the flyback transformer bracket.
5. Remove yoke connectors. Remove the connector from the base of the CRT.
6. Disconnect the black ground wire from the CRT DAG clip.
7. Remove the entire main PCBA, flyback assembly, and metal plate as a unit.

To install a new monitor control board, perform the above steps in reverse order.

**WARNING**

*A residual charge may exist across the flyback diode and a shock hazard exists even though insulated. Also, ensure that the diode is making proper contact in the connector.*

### Removal and Replacement of the Switching Power Supply

The following three steps explain the power supply removal:

1. Remove the main PCBA.
2. Remove the two hex nuts securing the power supply and hold down the plate.
3. Turn the hold down plate around until the power supply is exposed.
4. Remove the hex nut securing the power supply.
5. Remove the cable connector from the upper surface of the power supply board.
6. Pull the power supply downwards to remove it from the **ADM 36** base.

To replace the power supply PCBA, perform the above steps in reverse order.

**WARNING**

*Adjustments must be made with power applied to the* **ADM 36.** *To avoid electrical shock, use a non-conducting screwdriver for all applicable adjustments.*

## 5.4.1 Brightness Adjustment Procedure for the ADM 36

To adjust the **ADM 36** monitor brightness for proper operating level, the following procedure is to be followed:

2. Select setup mode which displays tab fields.
3. Use down arrow key on keyboard to set contrast to lowest limit. Display should be blank.
4. Adjust brightness control CW on monitor board until raster appears. Then turn brightness control CCW until raster disappears and the reverse video tab fields just disappear.
5. Use up arrow key on keyboard to adjust contrast for best display.
6. Verify proper video display as follows:

   Make sure unit is in local mode.

   Depress set-up key to remove unit from set-up mode.

Depress ESC [1m.

Enter 3 "E" characters.

Depress ESC [0m.

Enter 3 "E" characters.

Depress ESC [2m.

Enter 3 "E" characters.

Verify three levels of intensity are displayed - bold, normal, reduced - and are clearly visible.

**Note**

*Some adjustments of the contrast may be required in set-up mode. A Shift S should then be performed to save current contrast level in NVR.*

## 5.4.2 Vertical Adjustments

There is a slight interaction among the vertical frequency, height, and linerarity controls. A change in the height of the picture may effect linearity.

1. Apply video and synchronization signals to the monitor.
2. Set the vertical frequency control (R116) near the mechanical center of its rotation.
3. Adjust the vertical height control (R124) for desired height.
4. Adjust the vertical linearity control (R121) for best vertical linearity.
5. Remove the vertical drive signal from the unit. Or, alternately, use a short jumper lead and short the vertical drive input terminal of the printed circuit card edge connector to ground.
6. Readjust the vertical frequency control (R116) until the picture rolls up slowly.
7. Restore vertical drive to the monitor.
8. Recheck height and linearity.

## 5.4.3 Horizontal Adjustments

Raster width is affected by a combination of the low voltage supply, width coil L101, and the horizontal linearity sleeve located on the neck of the CRT beneath the yoke.

1. Apply video and synchronization signals to the monitor. Insert the horizontal linearity sleeve about 2/3 of its length under the yoke. (If you received a monitor from the factory in which the placement of the linearity sleeve has been determined, make a mark on the sleeve and reinsert the sleeve to this mark when removal of the yoke and linearity sleeve are required.)
   If the linearity sleeve is inserted farther than necessary, excessive power will be consumed and the horizontal output circuitry could be overstressed.
2. Adjust the horizontal width coil (L101) for the desired width.
3. Insert the linearity sleeve farther under the yoke to obtain best linearity. Although this adjustment will affect the raster width, it should not be used solely for that purpose. The placement of the linearity sleeve should be optimized for the best linearity.
4. Readjust L101 for proper width.
5. Observe the final horizontal linearity and width, and touch up either adjustment if needed.

No horizontal hold control is used in this monitor.

## 5.4.4 Focus Adjustments

The focus control (R107) adjusts the best overall display focus. However, because of the construction of the gun assembly in the CRT, this control does not have a large effect on focus.

## 5.4.5 Centering

If the raster is not properly centered, it may be repositioned by rotating the ring magnets behind the deflection yoke.

Do not use ring magnets to offset the raster from its nominal center position; this will degrade the resolution of the display.

If the picture is tilted, rotate the entire yoke.

## 5.4.6 Power Supply Adjustments

**Note**

*All power supply measurements are taken at full load using a DVM.*

To adjust the power supply, do the following:

1. Allow power supply to warm up for at least 15 minutes.
2. Refer to **figure 5-3** and check voltage near the input power connector on the main PCBA.
3. Using the potentiometer on the power supply PCBA, adjust for an indication of between +4.94 and +4.96V on the DVM.
4. Refer to **figure 5-3** and check for the indicated voltage tolerances on the input power connector.
5. Any unit which cannot be adjusted or does not meet the required tolerances has a power system fault which must be corrected.

**Note**

*This fault may not necessarily be with the power supply itself.*

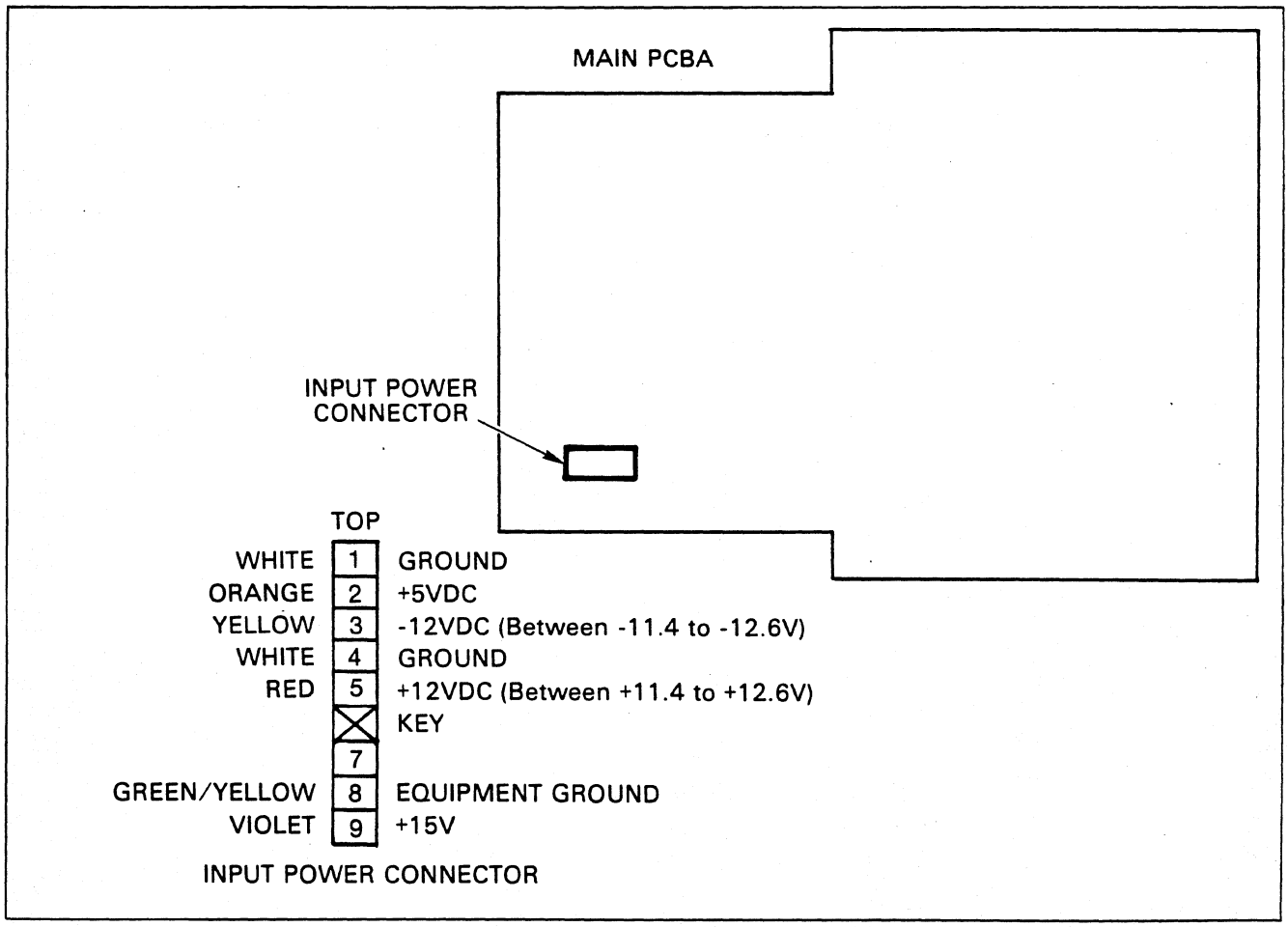


*Figure 5-3. Power Supply Adjustments*

# 5.5 FACTORY SERVICE AND MAINTENANCE INFORMATION

## 5.5.1 Depot Repair

Equipment returned to LSI must be shipped prepaid and must have a Return Goods Authorization (RGA) number on the outside top of the carton or the shipment may be lost, misrouted, or returned to you.

1. Prepare the following information:

   Model type of equipment to be returned

   Serial number

   Report symptom (if failure)

   Type of modification or option to be installed (if applicable)

2. Please call 714/774-1010, extension 371 or write to:

   Lear Siegler, Inc.
   Data Products Division
   714 North Brookhurst Street
   Anaheim, CA 92803

   ATTN: Customer Service

   or teletype:

   TELEX 655444
   TWX 910-591-1157

   Please state that you would like a Return Goods Authorization number. At this time, we will record the information you prepared, as well as a purchase order number, if applicable.

3. You will then be provided with an RGA number and the address of the depot where we request that you return the equipment.

**Note**

*All modifications and repairs are FOB Anaheim, California, Chicago, Illinois, or Philadelphia, Pennsylvania, whichever depot is used. All repairs are warranted for a period of 30 days. The freight responsibility for repairs made on out-of-warranty equipment is that of the customer. Return freight on repairs in warranty is paid by LSI/DPD.*

## 5.5.2 On-Site Maintenance

On-site service and maintenance is provided by factory-trained service representatives at each of the service cities listed on the following page. Please call your local Lear Siegler Service Representative for more information.

## Service Representatives

**Western Region**
Richard Leathers
714 N. Brookhurst St.
Anaheim, CA 92803
(714) 774-1010

**Western District**
J. Douglas Wathor
800 Charcot Suite 111
San Jose, CA 95131
(415) 828-6941

**Central Region**
Sam Bryant
970 N. Oaklawn Ave. Suite 102
Elmhurst, IL 60126
(312) 279-7710

**Southern District**
Kent Schaible
8401 Westheimer Suite 206
Houston, TX 77063
(713) 780-9440

**Eastern Region**
Lester F. Brown
P.O. Box 218
Bromfield St.
Harvard, MA 01451
(617) 456-8228
(617) 456-8065

**Eastern District**
Bob Arnold
2 Neshaminy Interplex
Suite 101
Roosevelt Blvd. & Old Lincoln Hwy.
Trevose, PA 19047
(215) 245-4080

## Service Cities

**Alabama**
Birmingham

**Arizona**
Phoenix

**Arkansas**
Del Dorado

**California**
Los Angeles
Palo Alto
San Diego
San Francisco
Santa Ana
Stockton
Ventura

**Colorado**
Denver

**Connecticut**
Norwalk

**Florida**
Miami
Orlando
Tampa

**Georgia**
Atlanta

**Illinois**
Chicago
Naperville
Peoria

**Indiana**
Indianapolis

**Iowa**
Des Moines

**Louisiana**
New Orleans

**Kentucky**
Louisville

**Maryland**
Baltimore
White Oak

**Massachusetts**
Boston
Chicopee

**Michigan**
Detroit
Grand Rapids

**Minnesota**
Minneapolis

**Missouri**
Kansas City
St. Louis

**Nebraska**
Clifton
South Brunswick

**New Mexico**
Albuquerque

**New York**
Albany
Buffalo
Hempstead
New York City
Rochester
Syracuse

**North Carolina**
Columbia

**Ohio**
Cincinnati
Cleveland
Columbus

**Oklahoma**
Oklahoma City

**Oregon**
Portland

**Pennsylvania**
Allentown
Harrisburg
Philadelphia
Pittsburgh

**Rhode Island**
Providence

**Tennessee**
Knoxville
Memphis

**Texas**
Dallas
Houston
Lubbock
San Antonio

**Utah**
Salt Lake City

**Virginia**
Richmond

**Washington**
Seattle

**Wisconsin**
Appleton
Milwaukee

# SECTION VI
# REFERENCE DRAWINGS

## 6.1 REFERENCE DRAWINGS

The reference drawings required for servicing the **ADM 36** video display terminal are included in numerical sequence in this section. These drawings include the schematics, wiring diagrams, and miscellaneous drawings, as listed below:

| DRAWING TITLE | ADM 36 ASSEMBLY |
|---|---|
| * Drawing Breakdown | 132765 |
| * Wiring Diagram | 132767 |
| * Schematic, Main Logic Board | 132772 |
| * Schematic, Keyboard | 132775 |
| * Schematic, ADM 36I Keyboard | 136134 |
| Ship Kit | 132768 |
| Options | 132769 |
| * 15 Volt Power Supply | 129881 |
| * Schematic, 15 Volt Power Supply | 132602 |
| * Schematic, 27 Volt Power Supply | 132672 |
| Samsung 12″ Monitor | 132502 |
| * Schematic, Samsung 12″ Monitor Control Board | |
| Motorola 15″ Monitor | 136069 |
| * Schematic, Motorola 15″ Monitor Control Board | |

*An enlarged copy of this drawing accompanys the manual for your convenience.

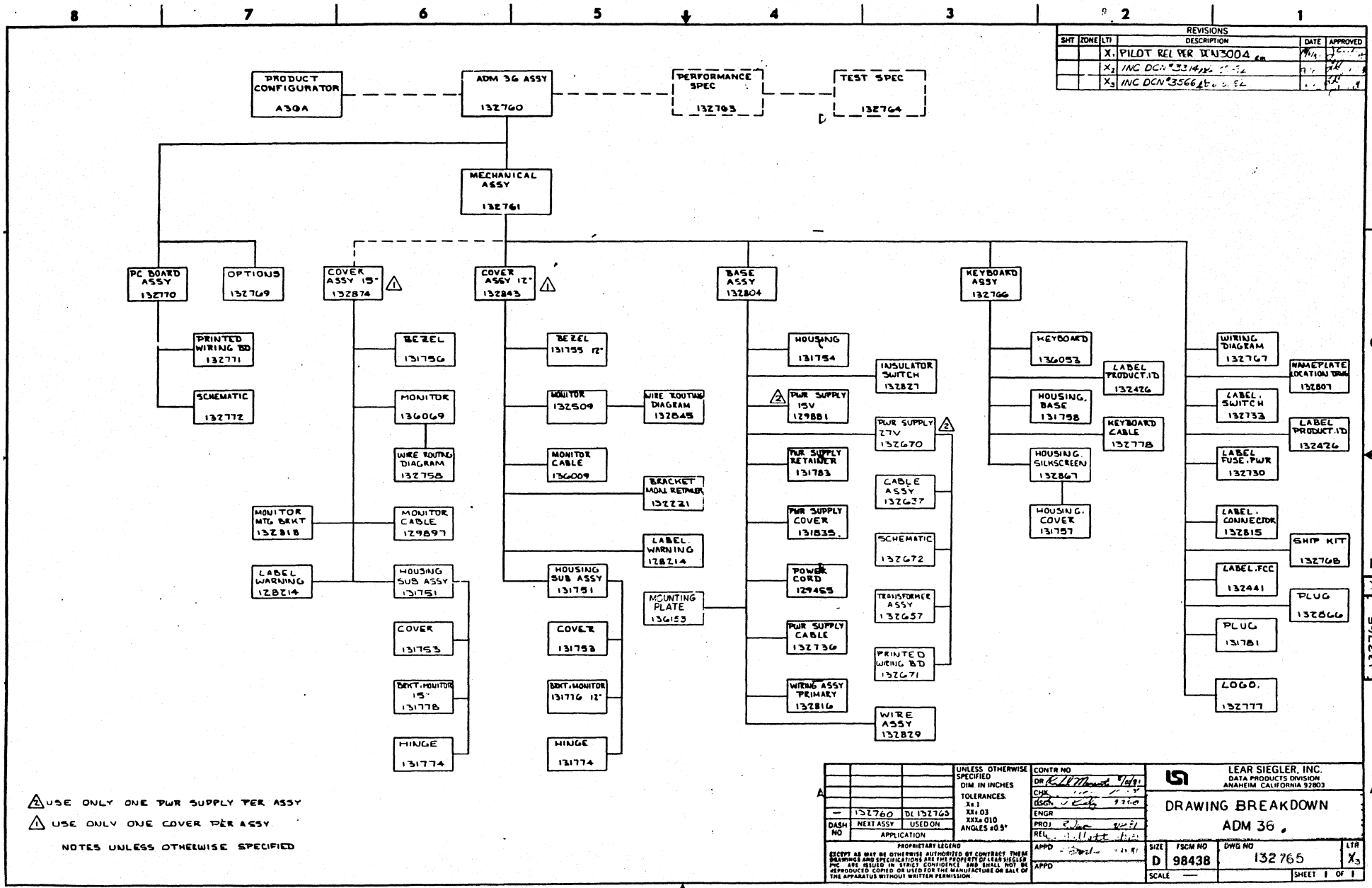
REVISIONS
SHT ZONE LTI DESCRIPTION DATE APPROVED
X1 PILOT REL PER DCN3004
X2 INC DCN #3314
X3 INC DCN #3566
PRODUCT CONFIGURATOR A30A
ADM 36 ASSY 132760
PERFORMANCE SPEC 132763
TEST SPEC 132764
MECHANICAL ASSY 132761
PC BOARD ASSY 132770
OPTIONS 132769
PRINTED WIRING BD 132771
SCHEMATIC 132772
COVER ASSY 15" 132874
BEZEL 131756
MONITOR 136069
WIRE ROUTING DIAGRAM 132758
MONITOR MTG BRKT 132818
MONITOR CABLE 129897
LABEL WARNING 128214
HOUSING SUB ASSY 131751
COVER 131753
BRKT. MONITOR 15" 131778
HINGE 131774
COVER ASSY 12" 132843
BEZEL 131755 12"
MONITOR 132509
WIRE ROUTING DIAGRAM 132845
MONITOR CABLE 136009
BRACKET MON. RETAINER 132221
LABEL WARNING 128214
HOUSING SUB ASSY 131751
COVER 131753
BRKT. MONITOR 131776 12"
HINGE 131774
MOUNTING PLATE 136153
BASE ASSY 132804
HOUSING 131754
INSULATOR SWITCH 132827
PWR SUPPLY 15V 129881
PWR SUPPLY 27V 132670
PWR SUPPLY RETAINER 131783
CABLE ASSY 132637
PWR SUPPLY COVER 131835
SCHEMATIC 132672
POWER CORD 129455
TRANSFORMER ASSY 132657
PWR SUPPLY CABLE 132736
PRINTED WIRING BD 132671
WIRING ASSY PRIMARY 132816
WIRE ASSY 132829
KEYBOARD ASSY 132766
KEYBOARD 136053
LABEL PRODUCT.ID 132426
HOUSING, BASE 131758
KEYBOARD CABLE 132778
HOUSING, SILKSCREEN 132867
HOUSING, COVER 131757
WIRING DIAGRAM 132767
NAMEPLATE LOCATION DWG 132807
LABEL, SWITCH 132733
LABEL PRODUCT.ID 132426
LABEL FUSE, PWR 132730
LABEL, CONNECTOR 132815
SHIP KIT 132768
LABEL, FCC 132441
PLUG 132866
PLUG 131781
LOGO, 132777
2 USE ONLY ONE PWR SUPPLY PER ASSY
1 USE ONLY ONE COVER PER ASSY
NOTES UNLESS OTHERWISE SPECIFIED
DASH NO
NEXT ASSY 132760
USED ON DL 132763
APPLICATION
UNLESS OTHERWISE SPECIFIED DIM IN INCHES
TOLERANCES: X±.1 XX±.03 XXX±.010 ANGLES ±0.5°
PROPRIETARY LEGEND
EXCEPT AS MAY BE OTHERWISE AUTHORIZED BY CONTRACT THESE DRAWINGS AND SPECIFICATIONS ARE THE PROPERTY OF LEAR SIEGLER INC. ARE ISSUED IN STRICT CONFIDENCE AND SHALL NOT BE REPRODUCED, COPIED OR USED FOR THE MANUFACTURE OR SALE OF THE APPARATUS WITHOUT WRITTEN PERMISSION.
CONTR NO
DR
CHK
DSGN
ENGR
PROJ
REL
APPD
APPD
LEAR SIEGLER, INC.
DATA PRODUCTS DIVISION
ANAHEIM CALIFORNIA 92803
DRAWING BREAKDOWN
ADM 36
SIZE D
FSCM NO 98438
DWG NO 132765
LTR X3
SCALE —
SHEET 1 OF 1
132765

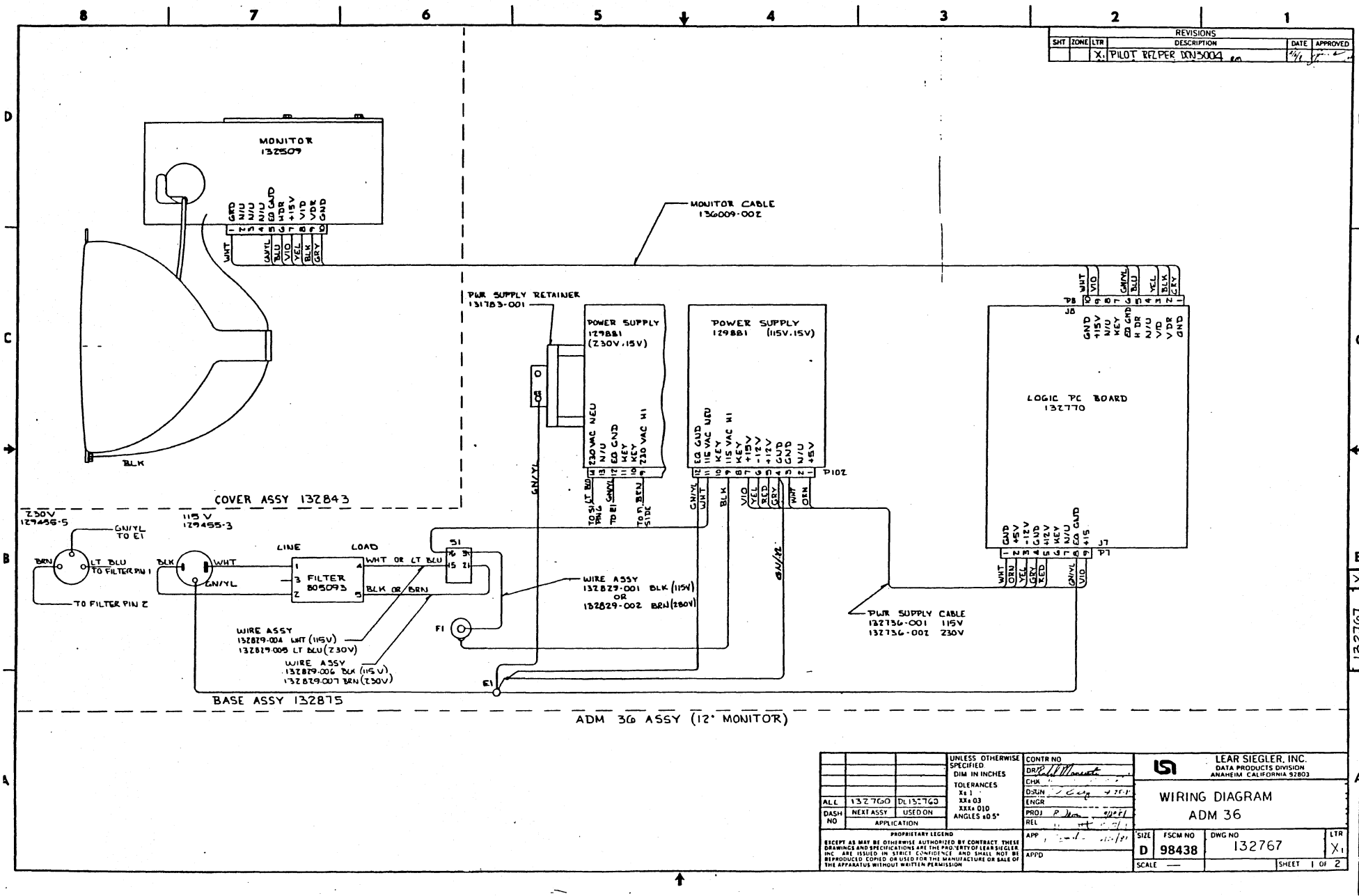
REVISIONS
SHT ZONE LTR DESCRIPTION DATE APPROVED
X1 PILOT RELPER DCN3004
MONITOR 132509
MONITOR CABLE 136009-002
PWR SUPPLY RETAINER 131783-001
POWER SUPPLY 129881 (230V,15V)
POWER SUPPLY 129881 (115V,15V)
LOGIC PC BOARD 132770
COVER ASSY 132843
230V 129456-5
115 V 129455-3
GN/YL TO E1
LT BLU TO FILTER PIN 1
TO FILTER PIN 2
LINE
LOAD
FILTER 805093
WHT OR LT BLU
BLK OR BRN
S1
F1
E1
WIRE ASSY 132829-001 BLK (115V) OR 132829-002 BRN (230V)
WIRE ASSY 132829-004 WHT (115V) 132829-005 LT BLU (230V)
WIRE ASSY 132829-006 BLK (115V) 132829-007 BRN (230V)
PWR SUPPLY CABLE 132736-001 115V 132736-002 230V
BASE ASSY 132875
ADM 36 ASSY (12" MONITOR)
UNLESS OTHERWISE SPECIFIED DIM IN INCHES
TOLERANCES X±1 XX±.03 XXX±.010 ANGLES ±0.5°
ALL 132760 DL132760
DASH NO NEXT ASSY USED ON
APPLICATION
PROPRIETARY LEGEND
EXCEPT AS MAY BE OTHERWISE AUTHORIZED BY CONTRACT THESE DRAWINGS AND SPECIFICATIONS ARE THE PROPERTY OF LEAR SIEGLER INC ARE ISSUED IN STRICT CONFIDENCE AND SHALL NOT BE REPRODUCED COPIED OR USED FOR THE MANUFACTURE OR SALE OF THE APPARATUS WITHOUT WRITTEN PERMISSION
CONTR NO
DR
CHK
DSGN
ENGR
PROJ
REL
APP
APPD
LEAR SIEGLER, INC.
DATA PRODUCTS DIVISION
ANAHEIM CALIFORNIA 92803
WIRING DIAGRAM
ADM 36
SIZE D
FSCM NO 98438
DWG NO 132767
LTR X1
SCALE —
SHEET 1 OF 2

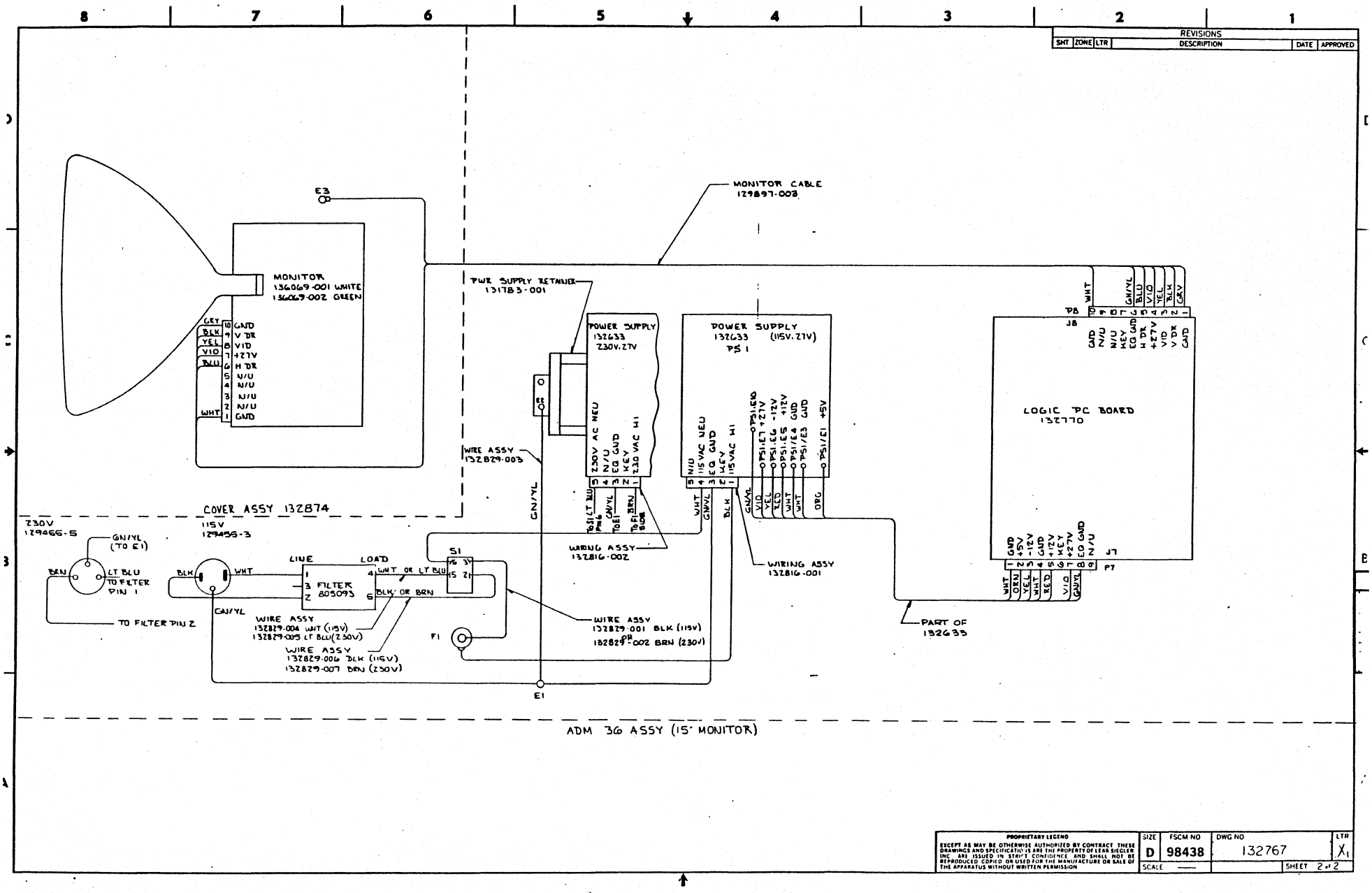
REVISIONS
SHT ZONE LTR DESCRIPTION DATE APPROVED
MONITOR
136069-001 WHITE
136069-002 GREEN
MONITOR CABLE
129897-003
PWR SUPPLY RETNR
131783-001
POWER SUPPLY
132633
230V, 27V
POWER SUPPLY
132633 (115V, 27V)
PS1
LOGIC PC BOARD
132770
WIRE ASSY
132829-003
WIRING ASSY
132816-002
WIRING ASSY
132816-001
COVER ASSY 132874
230V
129966-5
115V
129956-3
FILTER
605093
WIRE ASSY
132829-004 WHT (115V)
132829-005 LT BLU (230V)
WIRE ASSY
132829-006 BLK (115V)
132829-007 BRN (230V)
WIRE ASSY
132829-001 BLK (115V)
132829-002 BRN (230V)
PART OF
132635
ADM 36 ASSY (15" MONITOR)
PROPRIETARY LEGEND
SIZE D
FSCM NO 98438
DWG NO 132767
LTR X1
SCALE —
SHEET 2 of 2

6-4

DP336

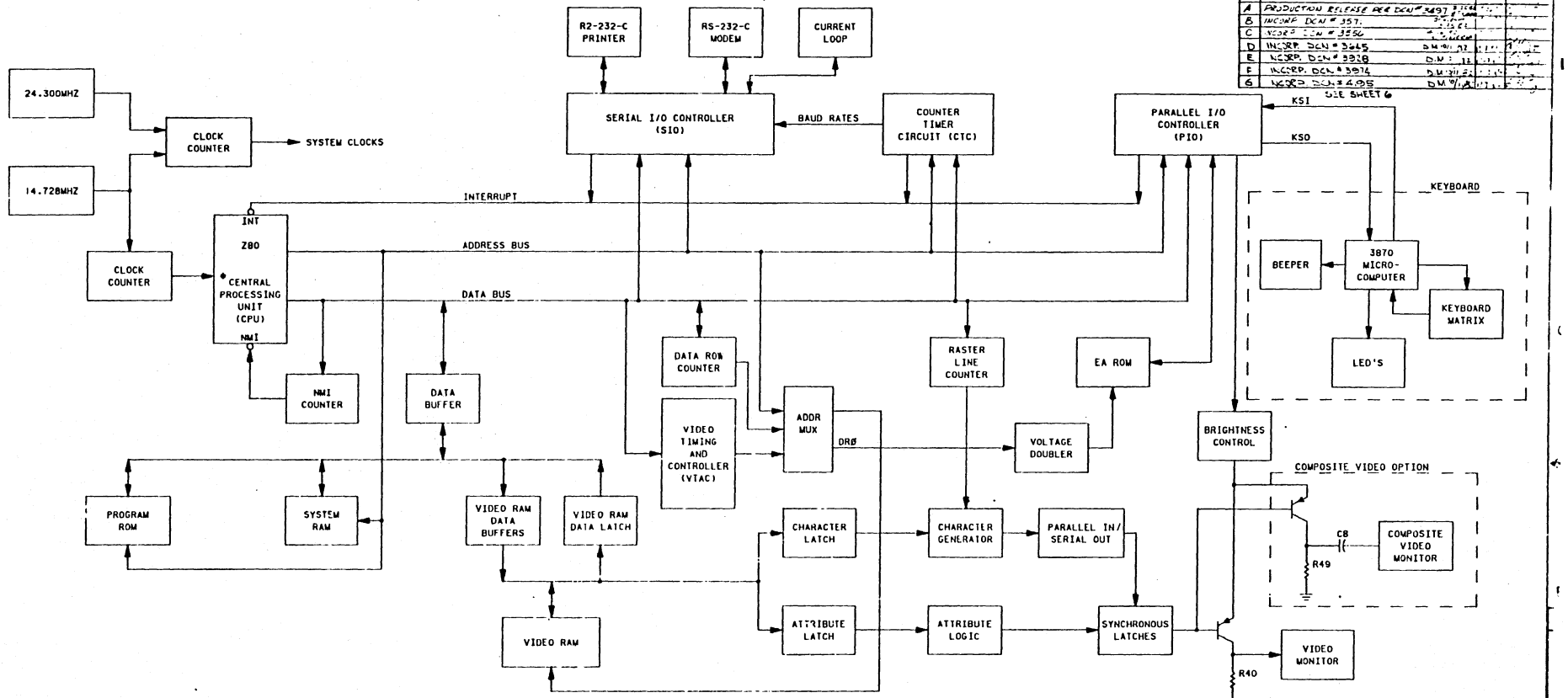


NOTES: UNLESS OTHERWISE SPECIFIED

1. FOR PRINTED WIRING BOARD REFER TO 132771
2. FOR ASSEMBLY REFER TO 132770
3. CAPACITOR VALUES IN MICROFARADS
4. RESISTOR VALUES IN OHMS ±5%, 1/4W
5. DEVICE POWER PINS ARE:
   FOR 14 PIN -7(GND), 14(+5)
   FOR 16 PIN -8(GND), 16(+5)
   FOR 20 PIN -10(GND),20(+5)
   FOR 1488 PIN 1(-12), 7(GND), 14(+5)
6. LAST REFERENCE DESIGNATION USED:
   R57, C77, CR12, E11, U87, J7, Q5

REVISIONS

| SHT | ZONE | LTR | DESCRIPTION | DATE | APPROVED |
|---|---|---|---|---|---|
| | | X1 | PILOT RELEASE PER DCN 3202 | | |
| | | A | PRODUCTION RELEASE PER DCN # 3497 | | |
| | | B | INCORP. DCN # 3571 | | |
| | | C | INCORP. DCN # 3556 | | |
| | | D | INCORP. DCN # 3645 | | |
| | | E | INCORP. DCN # 3928 | | |
| | | F | INCORP. DCN # 3974 | | |
| | | G | INCORP. DCN # 4095 | | |

SEE SHEET 6

| DASH NO | NEXT ASSY | USED ON |
|---|---|---|
| | 132770 | |

APPLICATION

UNLESS OTHERWISE SPECIFIED
DIM IN INCHES
TOLERANCES
X ± 1
XX ± .03
XXX ± .010
ANGLES ± 0.5°

CONTR NO
DR
CHK
DSGN
ENGR
FRQ
REL
APPD
APPD

LEAR SIEGLER, INC.
DATA PRODUCTS DIVISION
ANAHEIM, CALIFORNIA 92403

SCHEMATIC, ADM 36 LOGIC

SIZE D | FSCM NO 98438 | DWG NO 132772 | LTR H

SCALE NONE | SHEET 1 OF 6

PROPRIETARY LEGEND
EXCEPT AS MAY BE OTHERWISE AUTHORIZED BY CONTRACT THESE DRAWINGS AND SPECIFICATIONS ARE THE PROPERTY OF LEAR SIEGLER INC. ARE ISSUED IN STRICT CONFIDENCE AND SHALL NOT BE REPRODUCED, COPIED OR USED FOR THE MANUFACTURE OR SALE OF THE APPARATUS WITHOUT WRITTEN PERMISSION

3,5,6

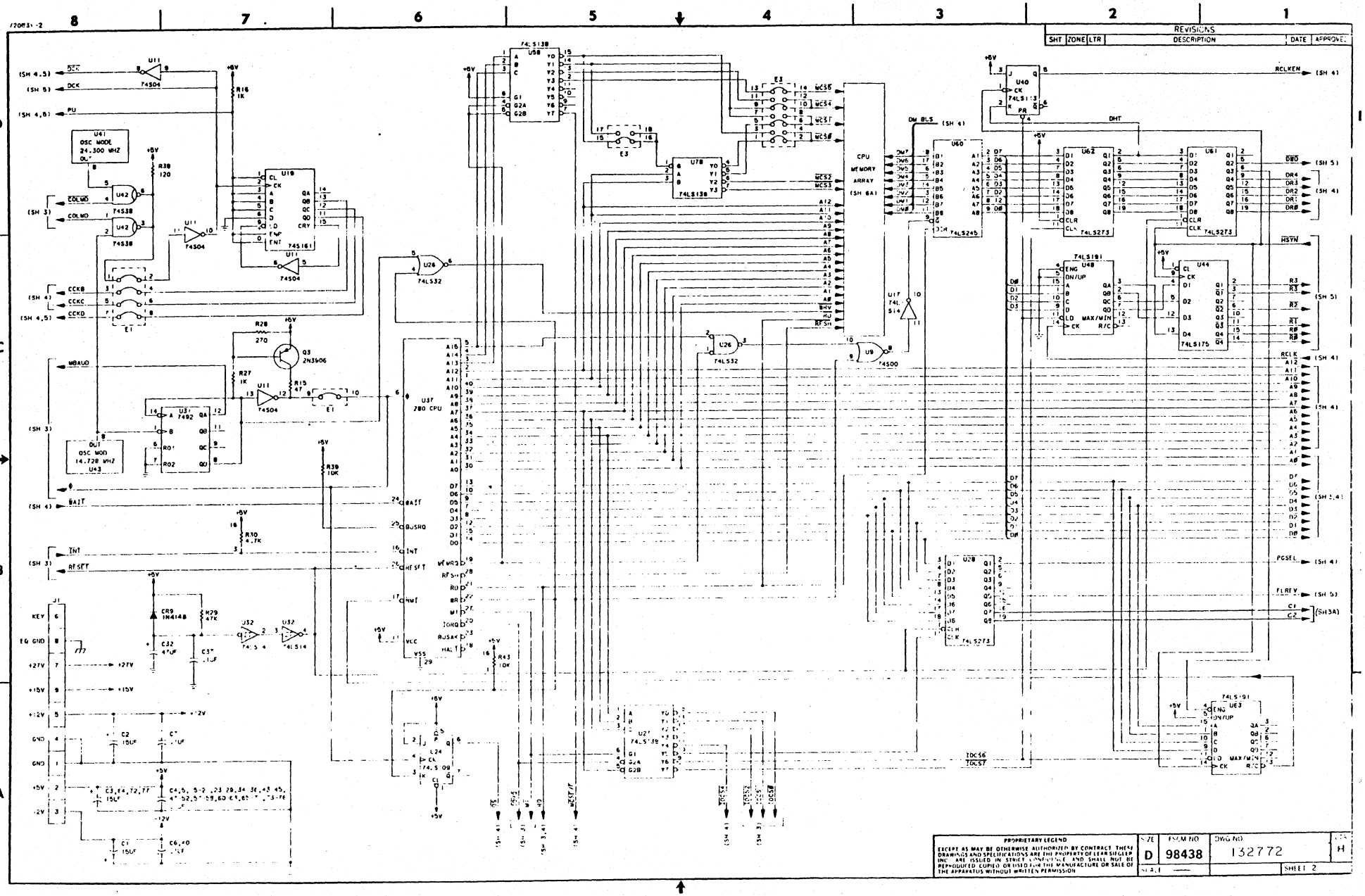
REVISIONS
SHT ZONE LTR DESCRIPTION DATE APPROVED
8
7
6
5
4
3
2
1
D
C
B
A
U37 Z80 CPU
U58 74LS138
U60 74LS245
U62 74LS273
U61 74LS273
U48 74LS191
U44 74LS175
U40 74LS113
U9 74S00
U26 74LS32
U27 74LS139
U28 74LS273
U78 74LS138
U19 74S161
U11 74S04
U32 74S14
U31 7492
U41 OSC MODE 24.300 MHZ
U43 OSC MOD 14.728 MHZ
U42 74S38
U17 74LS14
U24 74LS09
U5 74LS74
Q3 2N3906
CR9 1N4148
J1
CPU MEMORY ARRAY (SH 6A)
DM BUS (SH 4)
DMT
RCLKEN (SH 4)
HSYN
PCSEL (SH 4)
FLAFV (SH 5)
DBO (SH 5)
DR4 DR3 DR2 DR1 DRB
R3 R2 R1 R0
RCLK
WCS5 WCS4 WCS7 WCS6 WCS2 WCS3
IOCS6 IOCS7
WAIT BUSRQ INT RESET MWRQ RFSH RD BR M1 IORQB BUSAK HALT
MBAUD CCKB CCKC CCKD
KEY EG GND +27V +15V +12V GND GND +5V -12V
R16 1K
R38 120
R28 270
R27 1K
R15 47
R39 10K
R10 4.7K
R43 10K
C32 47UF
C2 150UF
C1 150UF
C3,E4,72,77 15UF
C4,5,9-12,23,28,34,36,43,45,47,52,57,59,60,64,65,73-76 .1UF
C6,40 .1UF
PROPRIETARY LEGEND
EXCEPT AS MAY BE OTHERWISE AUTHORIZED BY CONTRACT THESE DRAWINGS AND SPECIFICATIONS ARE THE PROPERTY OF LEAR SIEGLER INC. ARE ISSUED IN STRICT CONFIDENCE AND SHALL NOT BE REPRODUCED (COPIED) OR USED IN THE MANUFACTURE OR SALE OF THE APPARATUS WITHOUT WRITTEN PERMISSION
SIZE D
FSCM NO 98438
DWG NO 132772
REV H
SCALE —
SHEET 2

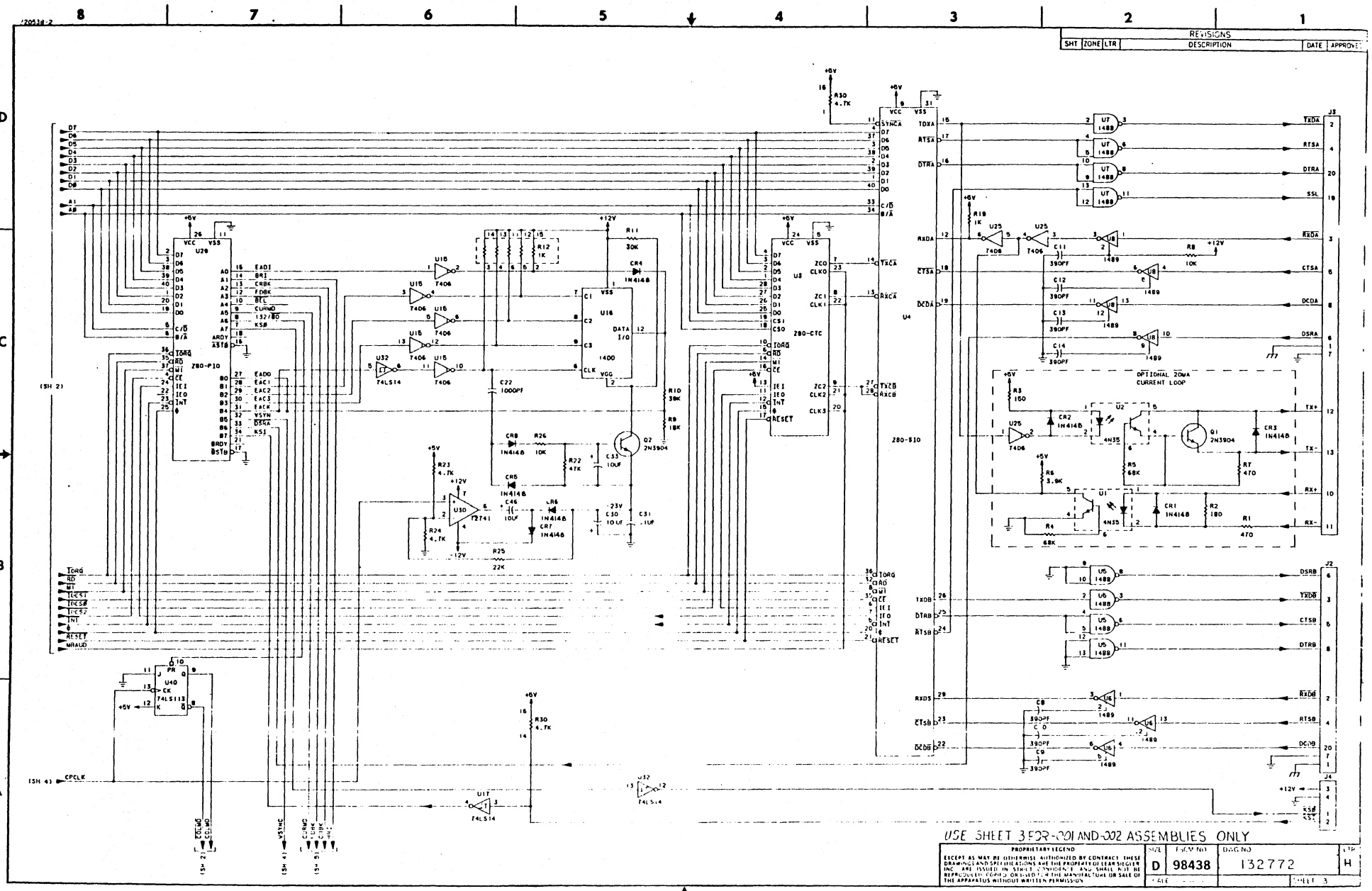
REVISIONS
SHT ZONE LTR DESCRIPTION DATE APPROVED
OPTIONAL 20MA CURRENT LOOP
Z80-PIO
Z80-CTC
Z80-SIO
USE SHEET 3 FOR -001 AND -002 ASSEMBLIES ONLY
PROPRIETARY LEGEND
EXCEPT AS MAY BE OTHERWISE AUTHORIZED BY CONTRACT, THESE DRAWINGS AND SPECIFICATIONS ARE THE PROPERTY OF LEAR SIEGLER INC. ARE ISSUED IN STRICT CONFIDENCE AND SHALL NOT BE REPRODUCED, COPIED OR USED FOR THE MANUFACTURE OR SALE OF THE APPARATUS WITHOUT WRITTEN PERMISSION
SIZE D
FSCM NO 98438
DWG NO 132772
LTR H
SHEET 3

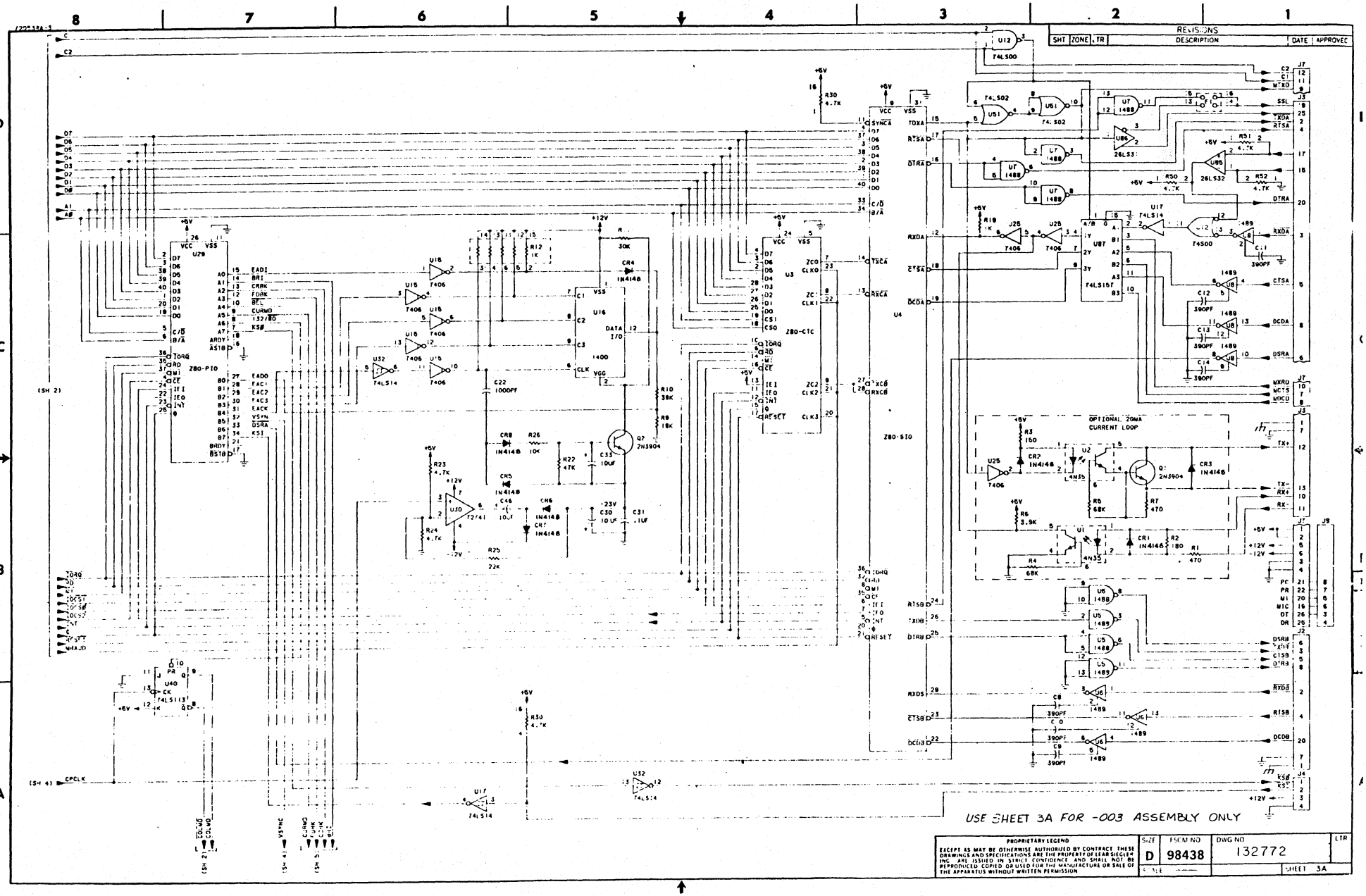
8
7
6
5
4
3
2
1
D
C
B
A
REVISIONS
SHT | ZONE | TR | DESCRIPTION | DATE | APPROVED
Z80-PIO
Z80-CTC
Z80-SIO
OPTIONAL 20MA CURRENT LOOP
USE SHEET 3A FOR -003 ASSEMBLY ONLY
PROPRIETARY LEGEND
SIZE D
FSCM NO 98438
DWG NO 132772
SHEET 3A
6-8
DP8036

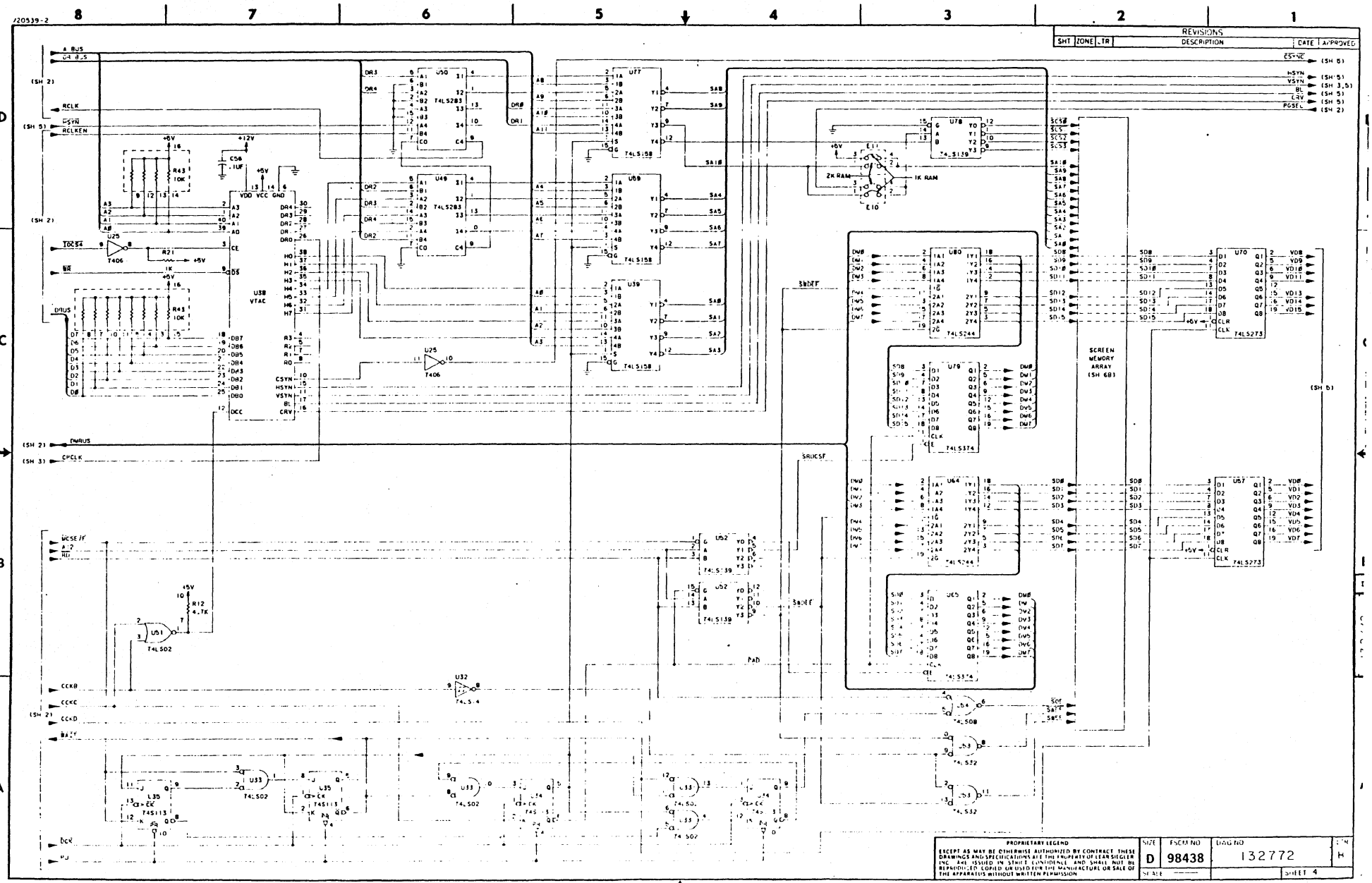
REVISIONS
SHT ZONE LTR DESCRIPTION DATE APPROVED
SCREEN MEMORY ARRAY (SH 6B)
U38 VTAC
U50 T4LS283
U49 T4LS283
U77 T4LS158
U59 T4LS158
U39 T4LS158
U78 T4LS139
U80 T4LS244
U79 T4LS374
U64 T4LS244
U65 T4LS374
U70 T4LS273
U57 T4LS273
U25 T406
U51 T4LS02
U32 T4LS14
U33 T4LS02
U35 T4S113
U54 T4LS08
U53 T4LS32
U52 T4LS139
2K RAM
1K RAM
PROPRIETARY LEGEND
EXCEPT AS MAY BE OTHERWISE AUTHORIZED BY CONTRACT, THESE DRAWINGS AND SPECIFICATIONS ARE THE PROPERTY OF LEAR SIEGLER INC. ARE ISSUED IN STRICT CONFIDENCE AND SHALL NOT BE REPRODUCED, COPIED OR USED FOR THE MANUFACTURE OR SALE OF THE APPARATUS WITHOUT WRITTEN PERMISSION
SIZE D
FSCM NO 98438
DWG NO 132772
SHEET 4

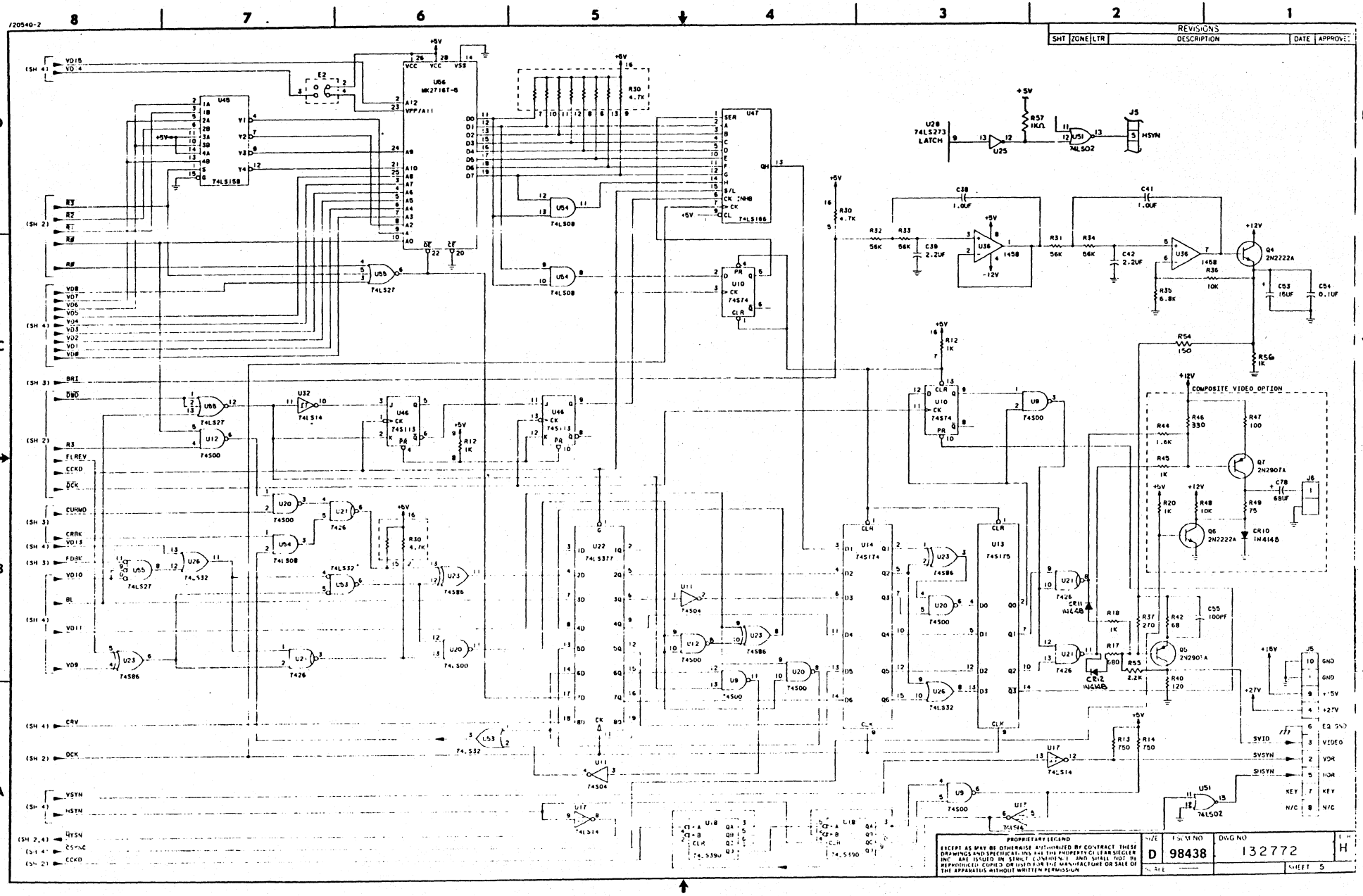
/20540-2
8
7
6
5
4
3
2
1
REVISIONS
SHT ZONE LTR DESCRIPTION DATE APPROVED
PROPRIETARY LEGEND
SIZE D
FSCM NO 98438
DWG NO 132772
SHEET 5
6-10
DP336

| REVISIONS | | | | | |
|---|---|---|---|---|---|
| SHT | ZONE | LTR | DESCRIPTION | DATE | APPROVED |
| | | H | INCORP. DCN # 4258 | | |

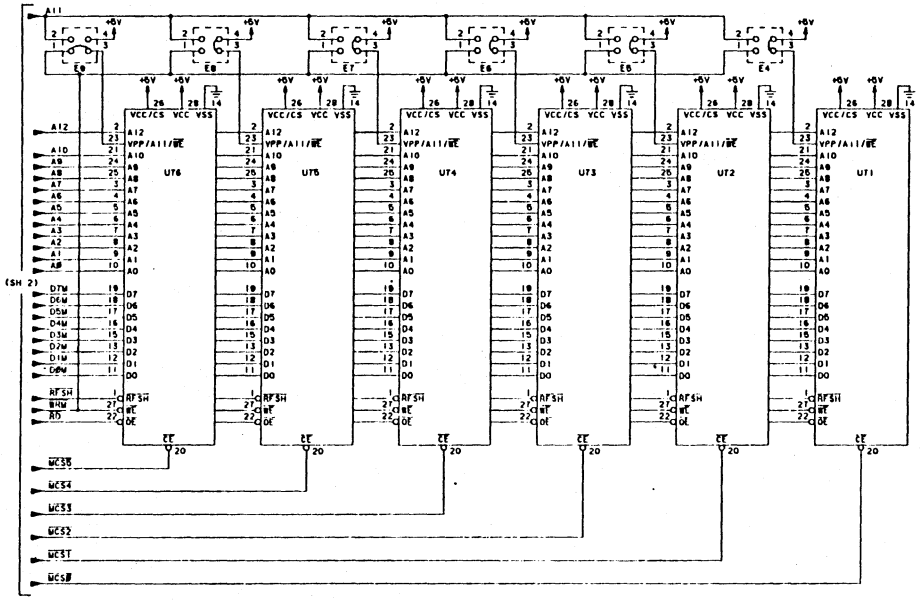


SH 6A: CPU MEMORY ARRAY

2K PROM: MK2716-8
2K ROM: MK34000-3
8K ROM: MK37000-5
1K RAM: MK4118A-4

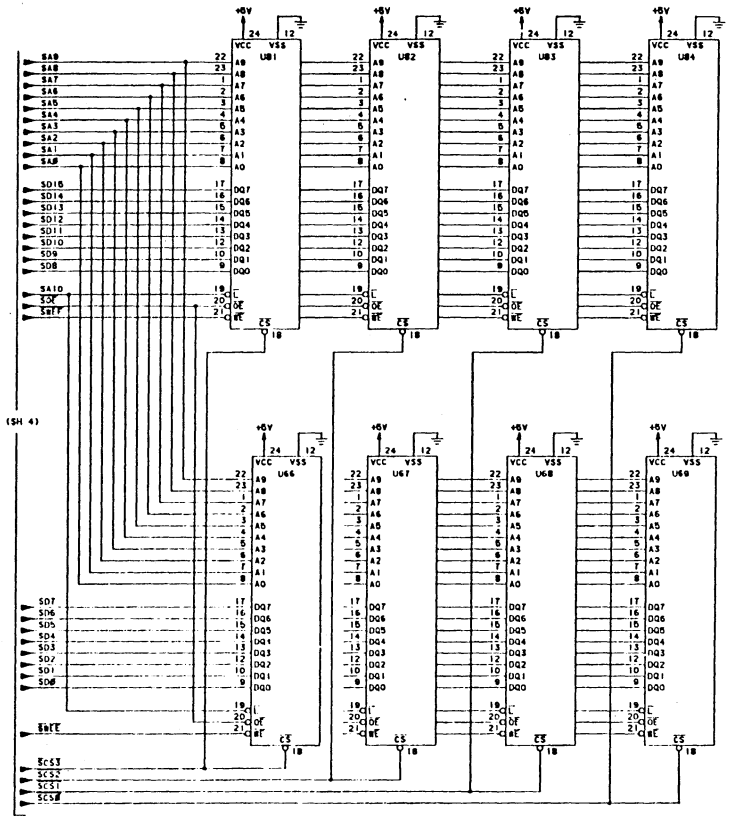


SH 6B: SCREEN MEMORY ARRAY

1K RAM: MK4118A-1, MK4801A-90
2K RAM: MK4802-90

| PROPRIETARY LEGEND | SIZE | FSCM NO. | DWG NO. | REV |
|---|---|---|---|---|
| EXCEPT AS MAY BE OTHERWISE AUTHORIZED BY CONTRACT, THESE DRAWINGS AND SPECIFICATIONS ARE THE PROPERTY OF LEAR SIEGLER, INC. ARE ISSUED IN STRICT CONFIDENCE AND SHALL NOT BE REPRODUCED, COPIED, OR USED FOR THE MANUFACTURE OR SALE OF THE APPARATUS WITHOUT WRITTEN PERMISSION | D | 98438 | 132772 | H |
| | SCALE —— | | SHEET 6 | |

| REVISIONS | | | | | |
|---|---|---|---|---|---|
| SHT | ZONE | LTR | DESCRIPTION | DATE | APPROVED |
| | | X | PILOT REL PER DCN 3004 | | |
| | | X1 | REVISED PER DCN 3306 | | |
| | | X3 | INCORPORATE DCN 3455 | | |

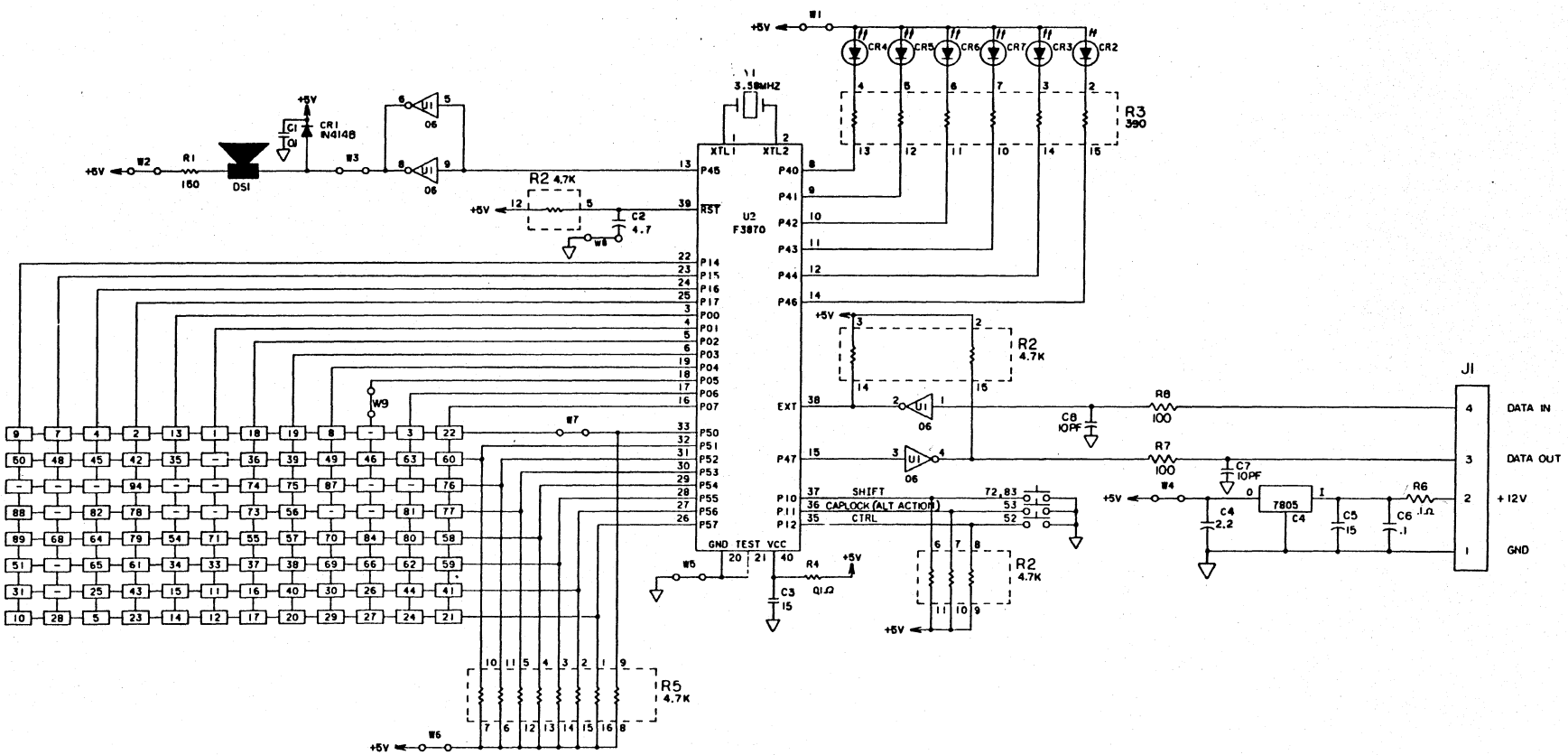


NOTES: UNLESS OTHERWISE SPECIFIED

1. RESISTANCE VALUES ARE IN OHMS
2. CAPACITANCE VALUES ARE IN MICROFARADS
3. KEY 53(CAPLOCK) ALTERNATE ACTION ALL OTHERS N.O.
4. FINAL ASSEMBLED KEYBOARD SHALL BE FLAT WITHIN .030

| DASH NO | NEXT ASSY | USED ON |
|---|---|---|
| - | 132773 | DC/132760 |
| | APPLICATION | |

UNLESS OTHERWISE SPECIFIED
DIM IN INCHES
TOLERANCES
X± 1
XX± 03
XXX± 010
ANGLES ±0.5°

CONTR NO
DR
CHK
DSGN
ENGR
PROJ
REL
APPD
APPD

PROPRIETARY LEGEND
EXCEPT AS MAY BE OTHERWISE AUTHORIZED BY CONTRACT, THESE DRAWINGS AND SPECIFICATIONS ARE THE PROPERTY OF LEAR SIEGLER INC. ARE ISSUED IN STRICT CONFIDENCE AND SHALL NOT BE REPRODUCED, COPIED, OR USED FOR THE MANUFACTURE OR SALE OF THE APPARATUS WITHOUT WRITTEN PERMISSION

LEAR SIEGLER, INC.
DATA PRODUCTS DIVISION
ANAHEIM, CALIFORNIA 92803

SCHEMATIC DIAGRAM
ADM 36 KEYBOARD

| SIZE | FSCM NO | DWG NO | LTR |
|---|---|---|---|
| D | 98438 | 132775 | X3 |
| SCALE NONE | | SHEET 1 OF 1 | |

3, 5, 6

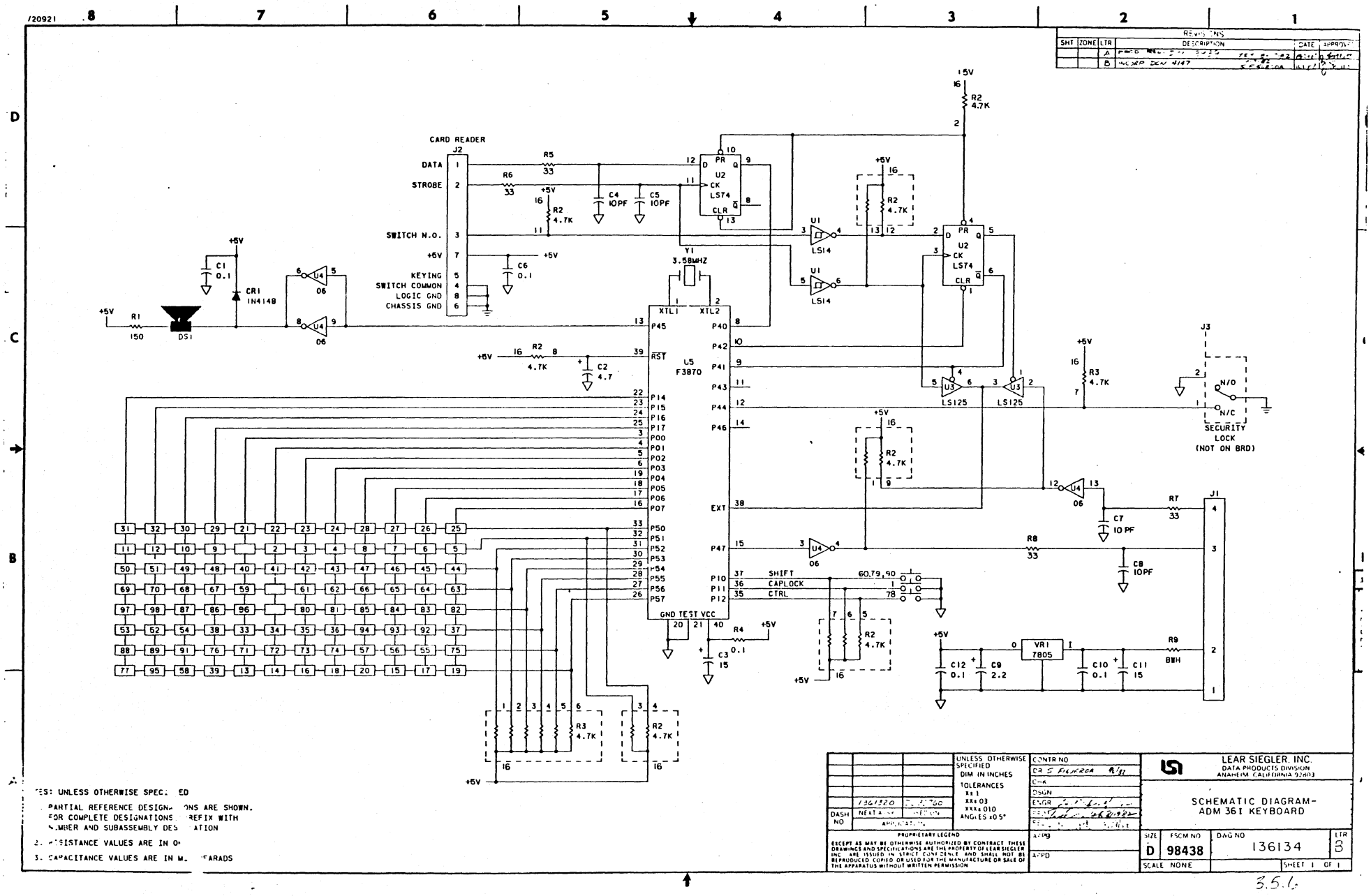


TES: UNLESS OTHERWISE SPEC[illegible]ED

1. PARTIAL REFERENCE DESIGN[illegible]ONS ARE SHOWN. FOR COMPLETE DESIGNATIONS [illegible]REFIX WITH NUMBER AND SUBASSEMBLY DES[illegible]ATION
2. [illegible]SISTANCE VALUES ARE IN O[illegible]
3. CAPACITANCE VALUES ARE IN M[illegible]FARADS

REVISIONS

| LTR | SHEET | DESCRIPTION | DATE | APPROVED |
|---|---|---|---|---|
| $X_1$ | | PILOT REL PER DCN 3004 RM | 10-6-81 10-7-81 | J. Millatt |
| $X_2$ | | INC DCN #3142 GD 6-29-82 | 9-28-82 | J. Millatt |
| $X_2$ | | DEVIATION #3292 GD 6-29-82 | 9-28-82 | J. Millatt |
| $X_3$ | | INC DCN #3560 GD 6-29-82 | 9-28-82 | J. Millatt |
| $X_4$ | | INC DCN #3601 GD 6-29-82 | 9-28-82 | J. Millatt |

| DASH NO. | NEXT ASSY | USED ON |
|---|---|---|
| 001 | 132760 | DL132760 |

APPLICATION

UNLESS OTHERWISE SPECIFIED
DIM. IN INCHES
TOLERANCES
.X ± .1
.XX ± .03
.XXX ± .010
ANGLES ± 0.5°
MACH. FIN.
√

DR Ruhl Monsanto 9/23/81
CHK Dech 10-6-81
DSGN W. Kelly 9-25-80
ENGR
PROJ R. Olson 9/29/81
REL J. Millatt 10/6/81
CUSTOMER APPD R Doshi

LEAR SIEGLER, INC.
ELECTRONIC INSTRUMENTATION DIV.
ANAHEIM, CALIF.

SHIP KIT, ADM 36

| SIZE | CODE IDENT | | REV |
|---|---|---|---|
| A | 98438 | 132768 | $X_4$ |

SCALE | SHEET 1 OF 2

FORM 10 1038

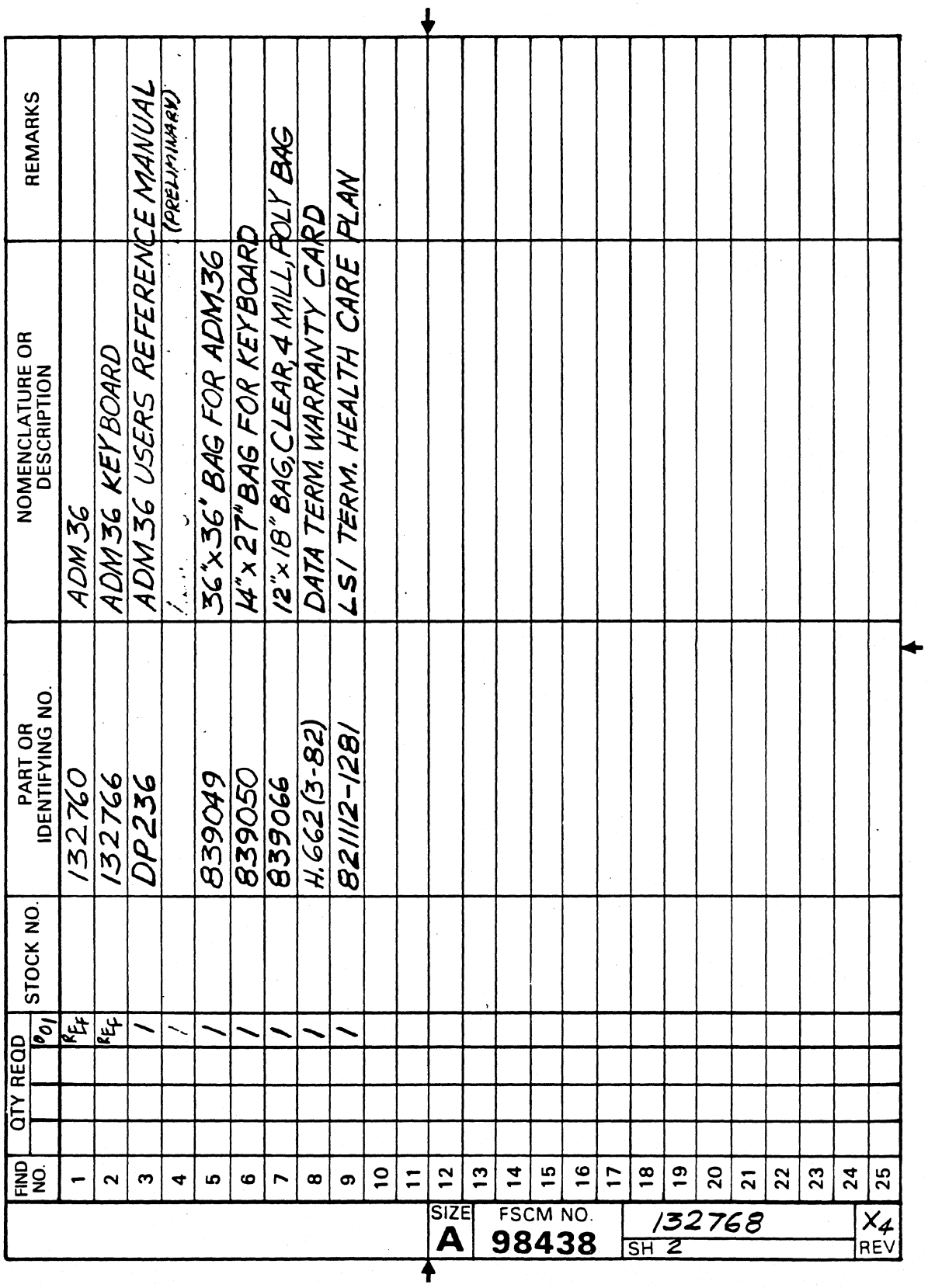

| FIND NO. | QTY REQD | | | STOCK NO. | PART OR IDENTIFYING NO. | NOMENCLATURE OR DESCRIPTION | REMARKS |
|---|---|---|---|---|---|---|---|
| | | | P01 | | | | |
| 1 | | REF | | | 132760 | ADM36 | |
| 2 | | REF | | | 132766 | ADM36 KEYBOARD | |
| 3 | | 1 | | | DP236 | ADM36 USERS REFERENCE MANUAL | (PRELIMINARY) |
| 4 | | 1 | | | | | |
| 5 | | 1 | | | 839049 | 36"x36" BAG FOR ADM36 | |
| 6 | | 1 | | | 839050 | 14"x27" BAG FOR KEYBOARD | |
| 7 | | 1 | | | 839066 | 12"x18" BAG, CLEAR, 4 MIL, POLY BAG | |
| 8 | | 1 | | | H.662(3-82) | DATA TERM. WARRANTY CARD | |
| 9 | | 1 | | | 82112-1281 | LSI TERM. HEALTH CARE PLAN | |
| 10 | | | | | | | |
| 11 | | | | | | | |
| 12 | | | | | | | |
| 13 | | | | | | | |
| 14 | | | | | | | |
| 15 | | | | | | | |
| 16 | | | | | | | |
| 17 | | | | | | | |
| 18 | | | | | | | |
| 19 | | | | | | | |
| 20 | | | | | | | |
| 21 | | | | | | | |
| 22 | | | | | | | |
| 23 | | | | | | | |
| 24 | | | | | | | |
| 25 | | | | | | | |

SIZE A | FSCM NO. 98438 | 132768 | SH 2 | X4 REV

REVISIONS

| LTR | SHEET | DESCRIPTION | DATE | APPROVED |
|---|---|---|---|---|
| A | | REL PER DCN 3383 | 2-5-82 | |

| DASH NO. | NEXT ASSY | USED ON |
|---|---|---|
| -001 | | |

APPLICATION

UNLESS OTHERWISE SPECIFIED
DIM. IN INCHES
TOLERANCES
.X ± .1
.XX ± .03
.XXX ± .010
ANGLES ± 0.5°
MACH. FIN. √

DR
CHK
DSGN
ENGR
PROJ
REL
CUSTOMER APPD

LEAR SIEGLER, INC.
ELECTRONIC INSTRUMENTATION DIV.
ANAHEIM, CALIF.

OPTIONS, ADM 3C
FACTORY INSTALLED

| SIZE | CODE IDENT | | REV |
|---|---|---|---|
| A | 98438 | 132769 | A |

SCALE | SHEET 1 OF 2

FORM 10 1038

| ITEM NO | QTY REQD 001 | PART NUMBER | DESCRIPTION | LOCATION/REF DES | NOTES |
|---|---|---|---|---|---|
| 1 | V | -001 | COMPOSITE VIDEO OPTION | | |
| 2 | | | | | |
| 3 | 1 | 809123 | CONN, VIDEO | J6 | |
| 4 | 1 | 810036 | TRANS 2N2222A | Q6 | |
| 5 | 1 | 810022 | TRANS 2N2907A | Q7 | |
| 6 | 1 | 808079 | DIODE, IN4148 | CR10 | |
| 7 | 1 | 128533-162 | RES, 1.6K | R44 | |
| 8 | 1 | 128533-102 | 1K | R45 | |
| 9 | 1 | 128533-181 | 180 | R46 | |
| 10 | 1 | 128533-101 | 100 | R47 | |
| 11 | 1 | 128533-103 | 10K | R48 | |
| 12 | 1 | 128533-750 | RES 75 | R49 | |
| 13 | 1 | 51001274-068 | CAP, 47 UF | C78 | |
| 14 | | | | | |
| 15 | 1 | 809239 | PLUG, COAX | FOR RG59 COAX | |

A. PARTS INSTALL ON 132770 ASSY'S. SEE DWG FOR LOC

B. IF CABLE IS FURNISHED BY LSI

C. PACKAGE AND FURNISH LOOSE WITH EQUIPMENT AS PART OF THIS OPTION. INCLUDE TERMINATION INSTRUCTIONS

| | | | |
|---|---|---|---|
| OPTION PART No. 132769-001 | SIZE A | CODE IDENT 98438 | 132769 REV A |
| TITLE COMPOSITE VIDEO | | | |
| SHEET 1 OF 1 | SCALE | | SHEET 2 |

**REVISIONS**

| LTR | SHEET | DESCRIPTION | DATE | APPROVED |
|---|---|---|---|---|
| A | | PRODUCTION RELEASE PER DCN 405 | 11/7/79 | A. Patel 11/7/79<br>B Hydeman |
| B | | INC DCN 578 JLP 5/29/80 BAB 5/29/80 | 5-30-80<br>6/3/80 | W. Kelly<br>B Hydeman |
| C | | INC DCN 873 JLP 5/29/80 BAB 5/29/80 | 5-30-80<br>6/3/80 | W. Kelly<br>B Hydeman |
| D | | INCORP DCN # 1532 DWA 11-17-80 | 11-21-80<br>11/21/80 | J Deck<br>B Hydeman |
| E | | INCORP DCN # 1488 DWA 11-17-80 | 11-21-80<br>11/21/80 | J Deck<br>B Hydeman |
| F | | INCORP DCN # 1683 DWA 12-05-80 | 12/3/80<br>12/6/80 | J Deck<br>B Hydeman |
| G | | INCORP DCN # 1793 DWA 1-19-81 | 1-29-81<br>1/30/81 | J Deck<br>B Hydeman |
| H | | INCORP DCN # 1964 SMB 3-30-81 | 3-27-81<br>3/31/81 | J Deck<br>B Hydeman |

SEE SHEET # 1A FOR REVISIONS

TABLE OF CONTENTS


1.0 SCOPE

2.0 APPLICABLE DOCUMENTS

3.0 ELECTRICAL REQUIREMENTS

4.0 MECHANICAL REQUIREMENTS

5.0 ENVIRONMENTAL REQUIREMENTS

6.0 SAFETY REQUIREMENTS

7.0 ORDERING INFORMATION

8.0 REFERENCE DOCUMENTATION

9.0 REVISION LEVEL


| DASH NO. | NEXT ASSY | USED ON APPLICATION |
|---|---|---|
| -6 | 129893 | ADM-31 |
| -5 | 129893 | ADM-31 |
| -2 | 129893 | ADM-31 |
| -1 | 129893 | ADM-31 |

NOTE: SHEET 7 IS A "B" SIZE DRAWING.

SPECIFICATION CONTROL DRAWING

UNLESS OTHERWISE SPECIFIED
DIM. IN INCHES
TOLERANCES
.X ± .1
.XX ± .03
.XXX ± .010
ANGLES ± 0.5°
MACH. FIN. √

DR W. Kelly 10-30-79
CHK [illegible] 10-30-79
DSGN W. Kelly 10-30-79
ENGR [illegible] 10-30-79
PROJ A. Patel 10/30/79
REL B Hydeman 11/7/79
CUSTOMER APPD

LEAR SIEGLER, INC.
ELECTRONIC INSTRUMENTATION DIV.
ANAHEIM, CALIF.

43 WATT SWITCH POWER SUPPLY SPECIFICATION

| SIZE | CODE IDENT | | REV |
|---|---|---|---|
| A | 98438 | 129881 | J |

SCALE | SHEET 1 of 8

FORM 10 1038

REVISIONS

| LTR | SHEET | DESCRIPTION | DATE | APPROVED |
|---|---|---|---|---|
| J | | INCORP DCN # 2483 & 8-7-81 | 8/7/81<br>8/12/81 | |

| SIZE | CODE IDENT | | REV |
|---|---|---|---|
| A | 98438 | 129881 | J |
| SCALE | | SHEET 1A | |

Form # 10-1011a

1.0 SCOPE

1.1 THIS DOCUMENT IDENTIFIES AND CONTROLS THE SPECIFICATIONS FOR A *43 WATT SWITCHING TYPE POWER SUPPLY OPEN FRAME TO BE USED IN A DATA TERMINAL.*

1.2

2.0 APPLICABLE DOCUMENTS

2.1 LSI ACCEPTANCE TEST PROCEDURE *13574.*

3.0 ELECTRICAL REQUIREMENTS

3.1 OUTPUT VOLTAGE LEVELS WITH OUTPUT "A" SET AT 5.00V - LOADED PER PARAGRAPH 3.2.

3.1.1 OUTPUT "A" SHALL PROVIDE +5.0 VOLTS ADJUSTABLE PER PARA. 3.9.

3.1.2 OUTPUT "B" SHALL PROVIDE +12.0 VOLTS DC NOMINAL ± 5%.

3.1.3 OUTPUT "C" SHALL PROVIDE -12.0 VOLTS DC NOMINAL. ± 5%

3.1.4 OUTPUT "D" SHALL PROVIDE +15.0 VOLTS DC NOMINAL. ± 5%

3.2 OUTPUT CURRENT LOADING

3.2.1 THE OUTPUT CURRENT AT OUTPUT "A" SHALL BE 3.0 AMPS MAXIMUM AND 0.6 AMPS MINIMUM.

3.2.2 THE OUTPUT CURRENT AT OUTPUT "B" SHALL BE 0.25 AMPS.

3.2.3 THE OUTPUT CURRENT AT OUTPUT "C" SHALL BE 0.20 AMPS.

3.2.4 THE OUTPUT CURRENT AT OUTPUT "D" SHALL BE 1.2 AMPS, NOMINAL WITH MAXIMUM PEAK CURRENT OF 1.5 AMPS.

3.3 OUTPUT VOLTAGE RIPPLE LOADED PER PARAGRAPH 3.2 OVER THE RANGE OF PARAGRAPH 3.11.1 AND 3.11.2.

3.3.1 THE VOLTAGE RIPPLE AT OUTPUT "A" SHALL NOT BE GREATER THAN 100 MILLIVOLTS PEAK TO PEAK.

3.3.2 THE VOLTAGE RIPPLE AT OUTPUT "B" SHALL NOT BE GREATER THAN 100 MILLIVOLTS PEAK TO PEAK.

3.3.3 THE VOLTAGE RIPPLE AT OUTPUT "C" SHALL NOT BE GREATER THAN 150 MILLIVOLTS PEAK TO PEAK.

3.3.4 THE VOLTAGE RIPPLE AT OUTPUT "D" SHALL NOT BE GREATER THAN 200 MILLIVOLTS PEAK TO PEAK,

3.3.5 RIPPLE VOLTAGE IS DEFINED AS OUTPUT VOLTAGE CHANGE RELATED TO EITHER THE POWER LINE OR THE SWITCHING FREQUENCY, MEASURED WITH A 100 MHZ BW SCOPE.

| SIZE | CODE IDENT | | REV |
|---|---|---|---|
| A | 98438 | 129881 | J |
| SCALE | | SHEET 2 | |

3.4 PERCENTAGE OF OUTPUT VOLTAGE REGULATION

3.4.1 THE OUTPUT VOLTAGE AT OUTPUT "A" SHALL NOT CHANGE MORE THAN ±2% WITH A CURRENT LOAD CHANGE FROM 1.8 AMPERES TO 3 AMPERES.

3.4.2 THE OUTPUT VOLTAGE AT OUTPUT "B" SHALL NOT CHANGE MORE THAN 5% WITH A CURRENT LOAD CHANGE FROM 0.1 AMPS TO 0.25 AMPS.

3.4.3 THE OUTPUT VOLTAGE AT OUTPUT "C" SHALL NOT CHANGE MORE THAN 5% WITH A CURRENT LOAD CHANGE FROM 0.1 AMPS TO 0.20 AMPS.

3.4.4 THE OUTPUT VOLTAGE AT OUTPUT "D" SHALL NOT CHANGE MORE THAN ±2% WITH A CURRENT LOAD CHANGE FROM 1.5 AMPERES TO 0.9 AMPERES.

3.5 OUTPUT VOLTAGE OVERSHOOT

3.5.1 THE VOLTAGE AT ANY OUTPUT SHALL NOT EXCEED 105% OF THE NOMINAL VALUE DURING TURN ON OR TURN OFF.

3.5.2 THE +15 VOLT OUTPUT VARIATION SHALL NOT EXCEED THE LIMITS SHOWN ON SHEET 6 WHEN SUBJECTED TO A CURRENT STEP CHANGE AS DEFINED ON SHEET 6. THE VOLTAGE LIMIT IS THE WORST CASE SUM (MAXIMUM PEAK TO PEAK) OF THE RIPPLE, REGULATION AND OVERSHOOT. THE MEASUREMENT SHALL BE MADE WITH THE OTHER OUTPUTS FULLY LOADED.

3.6 OUTPUT VOLTAGE HOLD-UP TIME

3.6.1 THE VOLTAGE AT ANY OUTPUT SHALL NOT CHANGE MORE THAN ±5% FROM THE NOMINAL VALUE AS A RESULT OF A 30 MILLISECOND INTERRUPTION IN INPUT POWER WHILE THE OUTPUTS ARE FURNISHING CURRENT LOADS AT NOMINAL LINE VOLTAGE AND LOADS PER PARAGRAPH 3.2.

3.7 OUTPUT LOAD IMPOSED RIPPLE.

3.7.1 THE RIPPLE VOLTAGE AT OUTPUT "A" SHALL NOT EXCEED 100 MV P-P AS A RESULT OF A MAXIMUM TO MINIMUM CURRENT CHANGE ON OUTPUT "D" PER PAGE 6. ALL OTHER OUTPUTS LOADED PER PARAGRAPH 3.2.

3.7.2 THE VOLTAGE AT OUTPUTS "B" AND "C" SHALL NOT CHANGE MORE THAN ±5% AS A RESULT OF MAXIMUM TO MINIMUM CURRENT CHANGE ON OUTPUT "D" PER PAGE 6. ALL OTHER OUTPUTS LOADED PER PARAGRAPH 3.2.

3.8 VOLTAGE STABILITY

3.8.1 WITH THE "A" OUTPUT ADJUSTED TO +5 VOLTS ±10 MILLIVOLTS, THE OUTPUT VOLTAGE SHALL NOT DRIFT MORE THAN ±1% IN A 30 DAY PERIOD.

3.8.2 ON ARRIVAL AT INCOMING INSPECTION OUTPUT "A" SHALL MEASURE GREATER THAN 4.94 VOLTS AND LESS THAN 5.06 VOLTS. THE MEASUREMENT SHALL BE MADE WITH ALL OUTPUTS LOADED TO THE MAX: MVM CURRENTS SPECIFIED IN PARA 3.4.

| SIZE | CODE IDENT | | REV |
|---|---|---|---|
| A | 98438 | 129881 | J |
| SCALE | | SHEET 3 | |

3.9 VOLTAGE ADJUSTMENT

3.9.1 THE VOLTAGE AT OUTPUT "A" SHALL BE ADJUSTABLE FROM A LOW OF NOT MORE THAN 4.75 VOLTS TO A HIGH OF NOT LESS THAN 5.25 VOLTS.

3.9.2 THE VOLTAGE AT OUTPUT "A" SHALL NOT CHANGE MORE THAN 6 MILLI-VOLTS PER DEGREE ROTATION OF THE ADJUSTMENT DEVICE.

3.10 OVERVOLTAGE PROTECTION

3.10.1 AN OVERVOLTAGE PROTECTION CIRCUIT SHALL BE PROVIDED TO PROTECT OUTPUT "A" FROM OVERVOLTAGE CONDITIONS DUE TO COMPONENT FAIL-URE TO EXCESSIVE LINE VOLTAGE.

3.10.2 THE OVERVOLTAGE PROTECTION CIRCUIT SHALL OPERATE WHEN THE "A" OUTPUT IS BETWEEN 6.2V $\pm$.5V.

3.11 POWER SUPPLY INPUT REQUIREMENTS

3.11.1 129881-1&5 SHALL OPERATE AT 115VAC $\pm$15%, 47 Hz TO 63 Hz.

3.11.2 129881-2&6 SHALL OPERATE AT 230VAC $\pm$15%, 47 Hz to 63 Hz.

3.11.3 LINE OVER CURRENT PROTECTION SHALL NOT BE REQUIRED.

3.12 A-C LINE REGULATION

3.12.1 THE OUTPUT VOLTAGES SHALL NOT CHANGE MORE THAN $\pm$0.2% WITH A $\pm$15% CHANGE IN THE AC LINE VOLTAGE. LOADED PER PARAGRAPH 3.2.

4.0 MECHANICAL REQUIREMENTS

4.1 PHYSICAL SIZE: PER PAGE 7 OF THIS SPECIFICATION.

4.2 CONNECTOR INTERFACE REQUIREMENTS: PER PAGE 7 OF THIS SPECIFI-CATION.

5.0 ENVIRONMENTAL REQUIREMENTS

5.1 THE OUTPUT VOLTAGES SHALL NOT CHANGE MORE THAN 0.02% PER DEGREE CENTIGRADE CHANGE IN AMBIENT TEMPERATURE.

5.2 OPERATING TEMPERATURE: +10°C. to +70°C.

5.3 STORAGE TEMPERATURE: -20°C. TO +85°C.

5.4 RELATIVE HUMIDITY: 20% TO 80% (NON-COND.)

5.5 ALTITUDE (DERATING): 10,000 FT.

| SIZE | CODE IDENT | | REV |
|---|---|---|---|
| A | 98438 | 129881 | J |
| SCALE | | SHEET 4 | |

6.0 SAFETY REQUIREMENTS

6.1 THE POWER SUPPLY SHALL BE DESIGNED TO MEET THE "UNDERWRITERS LABORATORIES" SAFETY STANDARD U.L. 478 WHEN CONTAINED WITHIN A SUITABLE ENCLOSURE.

7.0 ORDERING INFORMATION - REFER TO PURCHASE ORDER

8.0 REFERENCE DOCUMENTATION

8.1 THE VENDOR/SUPPLIER SHALL BE REQUIRED TO SUPPLY A COMPLETE DOCUMENTATION PACKAGE FOR THE UNIT SPECIFIED HEREIN. THE DOCUMENTATION MAY BE USED IN LSI MAINTENANCE MANUALS AND FOR U.L. SUBMITTAL.

8.2 DOCUMENTATION PACKAGE SHALL CONSIST OF:

- SCHEMATIC DIAGRAMS
- PC BOARD LAYOUT AND ASSEMBLY DRAWINGS
- COMPONENT PARTS LISTS
- COMPONENT SPECIFICATIONS
- TRANSFORMER AND PC BOARD MATERIAL SPECIFICATION FOR U.L. SUBMITTAL.

9.0 REVISION LEVEL - (NOTE: AFTER AN EFFECTIVE DATE THE PREVIOUS REVS. ARE UNACCEPTABLE AT RECEIVING INSPECTION LSI/DPD).

9.1 MANUFACTURER - MOTOROLA INC.

9.1.1 129881-1 REV A EFFECTIVE DEC 15, 1979
129881-2 REV A EFFECTIVE DEC 15, 1979

9.1.2 129881-1 REV B EFFECTIVE APR 1, 1980
129881-2 REV B EFFECTIVE APR 1, 1980

9.1.3 129881-1 REV C EFFECTIVE APR 15, 1980
129881-2 REV C EFFECTIVE APR 15, 1980

9.1.4 129881-1 REV D EFFECTIVE JUNE 1, 1980
129881-2 REV D EFFECTIVE JUNE 1, 1980

9.2 MANUFACTURER - SANYO

9.2.1 129881-3

9.2.2 129881-4

| SIZE | CODE IDENT | | REV |
|---|---|---|---|
| A | 98438 | 129881 | J |
| SCALE | | SHEET 5 | |

9.3 MANUFACTURER - LEAR SIEGLER

9.3.1 129881-1 - LSI P/N 132600-001
129881-2 - LSI P/N 132600-002
129881-5 - LSI P/N 132600-003
129881-6 - LSI P/N 132600-004

Form # 10-1011a

| SIZE | CODE IDENT | | REV |
|---|---|---|---|
| A | 98438 | 129881 | J |
| SCALE | | SHEET 6 | |

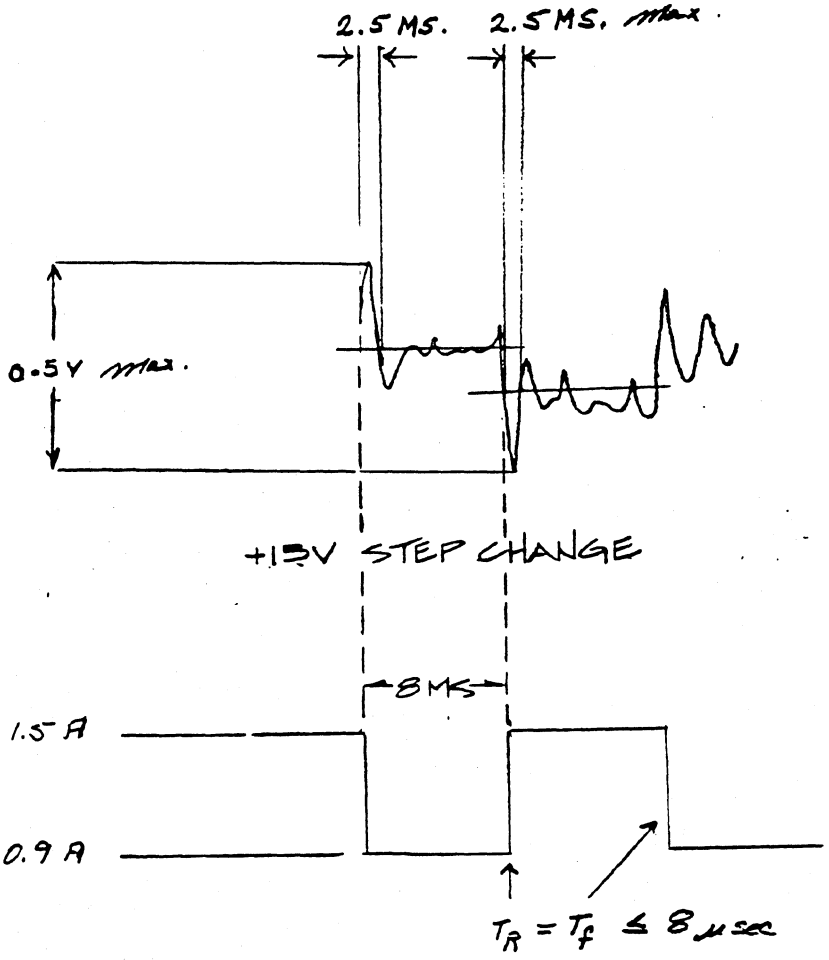


+15V OUTPUT CURRENT STEP CHANGE

| SIZE | CODE IDENT | | REV |
|---|---|---|---|
| A | 98438 | 129881 | J |
| SCALE | | SHEET 7 | |

Form # 10-1011a

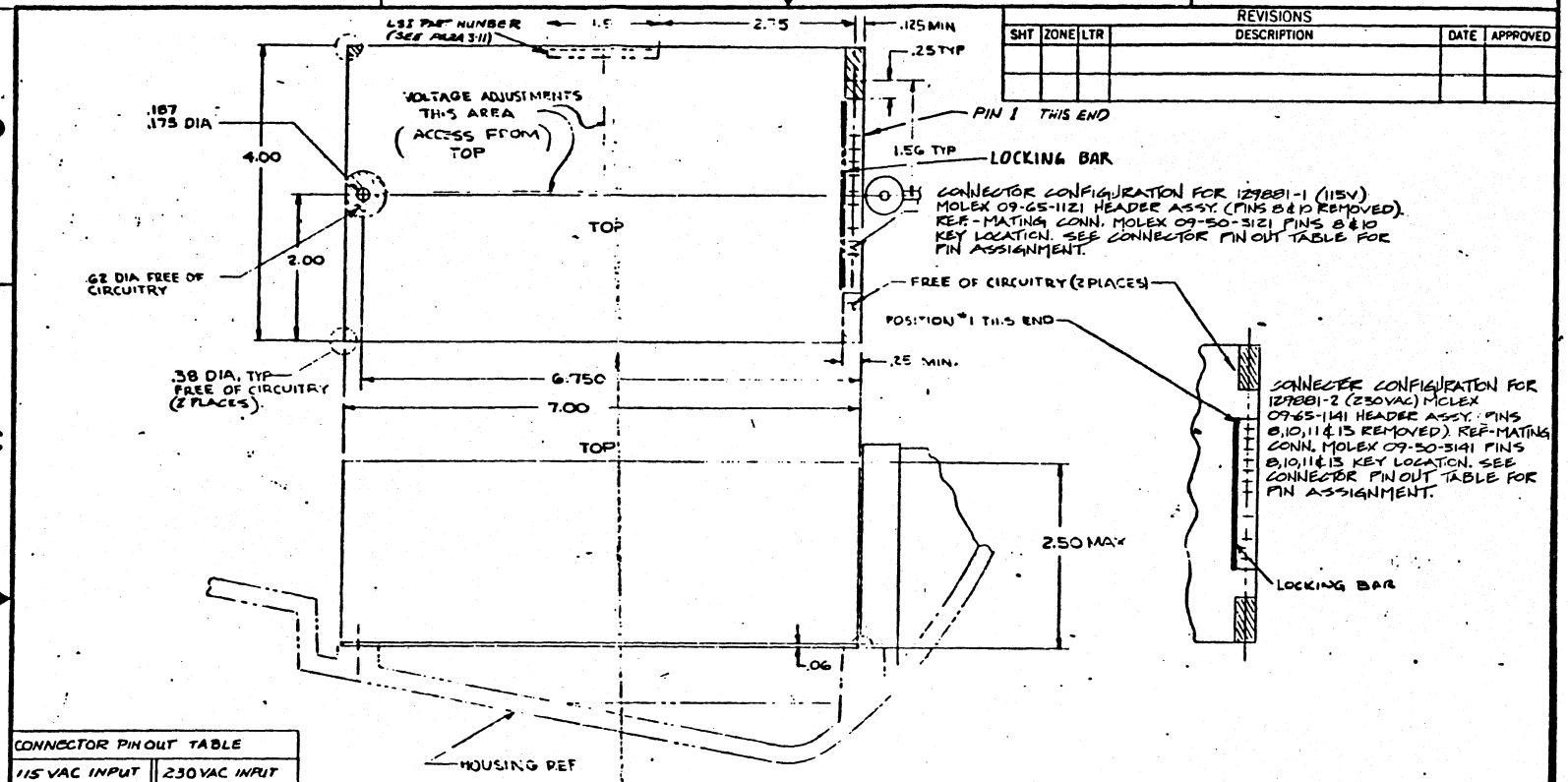


| REVISIONS | | | | | |
|---|---|---|---|---|---|
| SHT | ZONE | LTR | DESCRIPTION | DATE | APPROVED |
| | | | | | |
| | | | | | |
| | | | | | |

CONNECTOR PIN OUT TABLE

| 115 VAC INPUT | | 230 VAC INPUT | |
|---|---|---|---|
| PIN NO. | DESCRIPTION | PIN NO. | DESCRIPTION |
| 1 | +5 VDC | 1 | +5 VDC |
| 2 | +5 VDC | 2 | +5 VDC |
| 3 | DC RETURN | 3 | DC RETURN |
| 4 | DC RETURN | 4 | DC RETURN |
| 5 | +12 VDC | 5 | +12 VDC |
| 6 | -12 VDC | 6 | -12 VDC |
| 7 | +15 VDC | 7 | +15 VDC |
| 8 | KEY | 8 | KEY |
| 9 | 115 VAC HI | 9 | 230 VAC HI |
| 10 | KEY | 10 | KEY |
| 11 | 115 VAC LO | 11 | KEY |
| 12 | EQ END | 12 | EQ END |
| | | 13 | KEY |
| | | 14 | 230 VAC LO |

UNLESS OTHERWISE SPECIFIED:
DIM. IN INCHES
TOLERANCES:
X ± 1
XX ± 03
XXX ± 010
ANGLES ±0.5°

DASH NO | NEXT ASSY USED ON | APPLICATION

CONTR NO
DR
CHK
DSGN
ENGR
PROJ
REL
APPD
APPD

PROPRIETARY LEGEND
EXCEPT AS MAY BE OTHERWISE AUTHORIZED BY CONTRACT, THESE DRAWINGS AND SPECIFICATIONS ARE THE PROPERTY OF LEAR SIEGLER, INC. ARE ISSUED IN STRICT CONFIDENCE, AND SHALL NOT BE REPRODUCED, COPIED, OR USED FOR THE MANUFACTURE OR SALE OF THE APPARATUS WITHOUT WRITTEN PERMISSION.

LEAR SIEGLER, INC.
ELECTRONIC INSTRUMENTATION DIVISION
ANAHEIM, CALIFORNIA 92803

# 43 WATT SWITCH POWER SUPPLY SPECIFICATION

| SIZE | FSCM NO. | DWG NO. | LTR |
|---|---|---|---|
| B | 98438 | 129981 | J |
| SCALE FULL | | SHEET 7 | |

DL 129850 3NTS1THRU3 - A SIZES

DP336

6-27

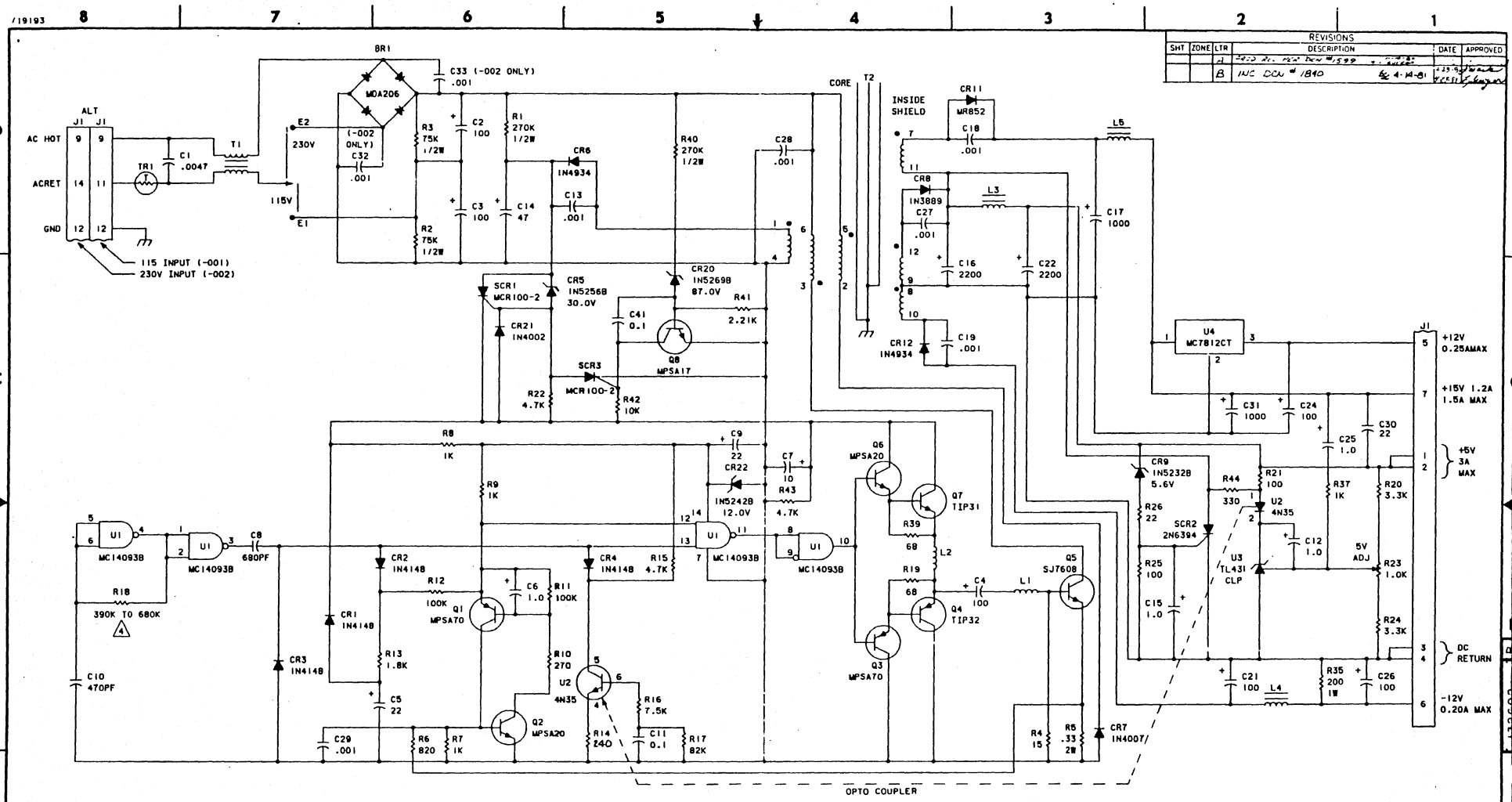


NOTES: UNLESS OTHERWISE SPECIFIED

1. PARTIAL REFERENCE DESIGNATIONS ARE SHOWN. FOR COMPLETE DESIGNATIONS, PREFIX WITH NUMBER AND SUBASSEMBLY DESIGNATION
2. RESISTANCE VALUES ARE IN OHMS
3. CAPACITANCE VALUES ARE IN MICROFARADS
4. R18 SELECTED TO MATCH U1 FOR 25±2.5KHZ OPERATION
5. FOR PRINTED WIRING BOARD REFER TO 132601.
6. FOR ASSEMBLY REFER TO 132600
7. REFERENCE DESIGNATIONS NOT USED (C20,23,32-40), (CR10,13-19),(R27-34,36,38).
8. LAST REFERENCE DESIGNATION USED C4LCR22,L5,Q8, R44,SC3,T2,U4.

REF 63DSH0I043A

| DASH NO | NEXT ASSY | USED ON |
|---|---|---|
| — | 132600 | 0L132600 |
| APPLICATION | | |

UNLESS OTHERWISE SPECIFIED
DIM IN INCHES
TOLERANCES
X± 1
XX± 03
XXX± 010
ANGLES ±0°

PROPRIETARY LEGEND
EXCEPT AS MAY BE OTHERWISE AUTHORIZED BY CONTRACT, THESE DRAWINGS AND SPECIFICATIONS ARE THE PROPERTY OF LEAR SIEGLER INC. ARE ISSUED IN STRICT CONFIDENCE AND SHALL NOT BE REPRODUCED, COPIED, OR USED FOR THE MANUFACTURE OR SALE OF THE APPARATUS WITHOUT WRITTEN PERMISSION

CONTR NO
DR S. Hamilton
CHK
DSGN
ENGR
PROJ
PE
APPD
APPD

LEAR SIEGLER, INC.
DATA PRODUCTS DIVISION
ANAHEIM CALIFORNIA 92803

SCHEMATIC SWITCHING POWER SUPPLY

| SIZE | FSCM NO | DWG NO | LTR |
|---|---|---|---|
| D | 98438 | 132602 | B |

SCALE | SHEET 1 OF 1

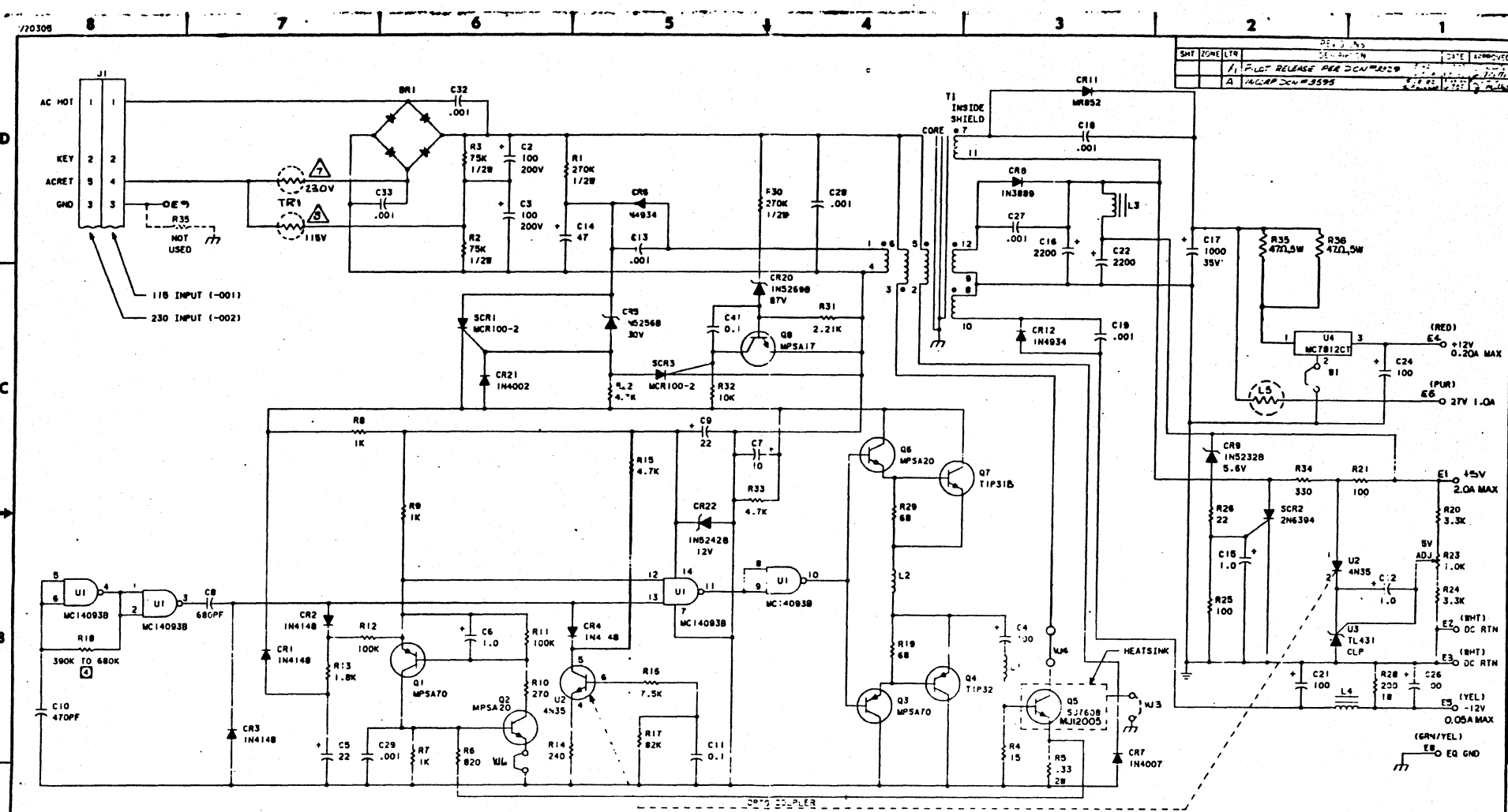


NOTES: UNLESS OTHERWISE SPECIFIED

1. PARTIAL REFERENCE DESIGNATIONS ARE SHOWN. FOR COMPLETE DESIGNATIONS, PREFIX WITH NUMBER AND SUBASSEMBLY DESIGNATION.
2. RESISTANCE VALUES ARE IN OHMS, 1/4W, ±5%
3. CAPACITANCE VALUES ARE IN MICROFARADS
4. R18 SELECTED TO MATCH U1 FOR 25±2.5 KHZ
5. FOR PRINTED WIRING BOARD SEE DWG 132671
6. FOR ASSEMBLY SEE DWG 132670

7. SURGE LIMITER (TR1) TO BE APPLIED AS SHOWN FOR 230V
8. SURGE LIMITER (TR1) TO BE APPLIED AS SHOWN FOR 115V

| SHT | ZONE | LTR | DESCRIPTION | DATE | APPROVED |
|---|---|---|---|---|---|
| | | A | PILOT RELEASE PER DCN #3529 | | |
| | | A | INCORP DCN #3595 | | |

LEAR SIEGLER, INC.
DATA PRODUCTS DIVISION
ANAHEIM, CALIFORNIA 92803

SCHEMATIC, POWER SUPPLY -27V

SIZE D | CODE NO. 98438 | DWG NO. 132672

**REVISIONS**

| LTR | SHEET | DESCRIPTION | DATE | APPROVED |
|---|---|---|---|---|
| A | | RELEASE PER DCN 2491 | 6/9/81 | |
| B | | INC DCN#2979 | 7-7-82 | |
| C | | INC DCN#3093 | 7-7-82 | |
| – | | DEVIATION#3309 | 7-7-82 | |

TABLE OF CONTENTS


| PARA | DESCRIPTION | |
|---|---|---|
| 1.0 | SCOPE | 2 |
| 2.0 | APPLICABLE DOCUMENTS | 2 |
| 3.0 | INPUT REQUIREMENTS | 2 |
| 4.0 | DISPLAY CHARACTERISTICS | 3 |
| 5.0 | RESOLUTION | 5 |
| 6.0 | POWER REQUIREMENTS | 5 |
| 7.0 | ENVIRONMENTAL REQUIREMENTS | 5 |
| 8.0 | CERTIFICATIONS | 6 |
| 9.0 | EQUIPMENT WARRANTY AND REPAIR | 6 |
| 10.0 | PACKAGING | 6 |
| 11.0 | REFERENCE DOCUMENTATION | 7 |
| 12.0 | APPROVAL OF CHANGES | 7 |
| 13.0 | APPROVED VENDOR | 7 |
| | FIGURE 1 PACKAGING | 8 |
| | FIGURE 2 16.2MHZ TIMING | 9 |
| | FIGURE 3 19.2MHZ TIMING | 10 |
| | FIGURE 4 CRT DISPLAY AREA | 11 |
| | FIGURE 5 CRT OUTLINE | 12 |
| | FIGURE 6 MONITOR BOARD OUTLINE | 13 |


SPECIFICATION CONTROL DRAWING

| DASH NO. | NEXT ASSY | USED ON |
|---|---|---|
| -002 | — | |
| -001 | — | DL129850 |

APPLICATION

UNLESS OTHERWISE SPECIFIED
DIM. IN INCHES
TOLERANCES
X ± .1
.XX ± .03
.XXX ± .010
ANGLES ± 0.5°
MACH. FIN. √

DR W. Kelly 6-4-81
CHK J. Deck 6-9-81
DSGN 6-9-81
ENGR
PROJ
REL J. McWatt 6/9/81
CUSTOMER APPD

LEAR SIEGLER, INC.
DATA PRODUCTS DIVISION
ANAHEIM, CALIFORNIA 92803

MONITOR, 12 INCH CRT
DUAL PULSE RATE

| SIZE | CODE IDENT | | REV |
|---|---|---|---|
| A | 98438 | 132509 | C |

SCALE | SHEET 1 of 13

FORM 10 1078

1.0 SCOPE

1.1 THIS SPECIFICATION DEFINES A 12-INCH MONITOR TO BE OPERATED IN DIRECT DRIVE MODE AT 16.2 OR 19.2 KHZ FROM A +15 VOLT DC SUPPLY.

2.0 APPLICABLE DOCUMENTS

2.1 LSI 131574, ACCEPTANCE TEST PROCEDURE

2.2 LSI 132421, QUALITY SPEC, DIRECT ETCH CRT

3.0 INPUT REQUIREMENTS

3.1 INPUT CONNECTOR FOR DIRECT DRIVE

3.1.1 PCB CONDUCTOR TABS PIN-OUT

| | |
|---|---|
| PIN 1 | HORIZONTAL/POWER GROUND |
| 2 | UNUSED |
| 3 | UNUSED |
| 4 | UNUSED |
| 5 | UNUSED |
| 6 | HORIZONTAL SYNC |
| 7 | POWER (+14 VDC) |
| 8 | VIDEO SIGNAL |
| 9 | VERTICAL SYNC |
| 10 | VERTICAL/VIDEO/POWER GROUND |

3.1.2 PCB CONDUCTOR TABS SHALL HAVE 0.156 INCH CENTER TO CENTER CONTACT SPACING; PRINTED CIRCUIT BOARD SHALL BE 0.054 TO 0.071 INCH THICK.

3.1.3 MATING CONNECTOR SHALL BE EQUIVALENT TO AN AMP 583479-1 HOUSING WITH TEN AMP TYPE 583259-2 CONTACTS.

3.1.4 PHYSICAL OUTLINE OF MONITOR SHALL BE PER FIGURE #6.

3.2 VIDEO INPUT CHARACTERISTICS

3.2.1 INPUT IMPEDANCE SHALL BE 4.0K OHM MINIMUM, SHUNTED BY 40 pf MAX.

3.2.2 INPUT VIDEO SIGNAL LEVELS SHALL BE ZERO TO 0.4 VOLTS FOR BLACK. LEVEL SHALL BE ADJUSTABLE BUT NOT TO EXCEED 5.5 VOLTS FOR WHITE. STANDARD VIDEO SHALL BE DEFINED AS DISPLAYING WHITE DOTS ON A BLACK BACKGROUND.

| SIZE | CODE IDENT | | REV |
|---|---|---|---|
| A | 98438 | 132509 | C |
| SCALE | | SHEET 2 | |

Form # 10-1011a

3.3 VERTICAL SYNC INPUT CHARACTERISTICS

3.3.1 INPUT LOADING SHALL BE COMPATIBLE TO 74S SERIES TTL LOGIC.

3.3.2 PULSE AMPLITUDE SHALL BE A LOW LEVEL OF 0.0 TO +0.4 VOLTS AND A HIGH LEVEL OF 2.5 TO 5.5 VOLTS.

3.3.3 PULSE RATE SHALL BE EITHER 50 OR 60 PULSES PER SECOND ± 1%.

3.3.4 PULSE RISE AND FALL TIMES SHALL BE EQUAL TO OR LESS THAN 100 N SEC.

3.3.5 WAVEFORMS AND TIMINGS - SEE FIG. 2 OR 3.

3.4 HORIZONTAL SYNC INPUT CHARACTERISTICS

3.4.1 INPUT LOADING SHALL BE COMPATIBLE TO 74S SERIES TTL LOGIC.

3.4.2 PULSE AMPLITUDE SHALL BE A LOW LEVEL OF 0.0 TO +0.4 VOLTS AND A HIGH LEVEL OF 2.5 TO 5.5.

3.4.3 PULSE RATE SHALL BE 16.2 KHZ ± 1%, OR 19.2 KHZ ± 1%.

3.4.4 PULSE RISE AND FALL TIME SHALL BE EQUAL TO OR LESS THAN 50 N SEC.

3.4.5 UNIT AS SHIPPED SHALL BE CONFIGURED FOR 16.2 KHZ.

3.4.6 WAVEFORMS AND TIMINGS FOR 16.2 KHZ - SEE FIG. 2, FOR 19.2 KHZ, SEE FIG. 3.

4.0 DISPLAY CHARACTERISTICS

4.1 CATHODE RAY TUBE

4.1.1 CATHODE RAY TUBE (CRT) SHALL HAVE A TWELVE-INCH DIAGONAL MEASUREMENT. SEE FIG. 5.

4.1.2 CRT SHALL BE SUPPLIED WITH P4 PHOSPHOR WITH A DARK BODY INERT SUBSTANCE TO IMPROVE CONTRAST (-001), OR P31 PHOSPHOR (-002).

4.1.3 CRT SHALL HAVE A DISPLAY AREA AS SHOWN IN FIG 4.

4.1.4 CRT SHALL BE SUPPLIED WITH A "T" BAND TO MEET U.L. IMPLOSION PROTECTION REQUIREMENTS.

4.1.5 CRT SHALL HAVE A DISPLAY AREA AS SHOWN IN FIG. 4.

| SIZE | CODE IDENT | | REV |
|---|---|---|---|
| A | 98438 | 132509 | C |
| SCALE | | SHEET 3 | |

4.1.6 CRT FACE PLATE SHALL HAVE AN ETCHED FINISH TO REDUCE REFLECTIVITY. QUALITY AND FORM OF THE ETCH SHALL BE VISUALLY INDISTINGUISHABLE FROM THE STANDARD UNIT HELD BY LSI/DPD.

4.2 CONTROLS

4.2.1 INTERNAL SET-UP CONTROLS PROVIDED WITHIN THE UNIT SHALL CONSIST OF THE FOLLOWING:

1. HEIGHT
2. VERTICAL SYNC - OPTIONAL
3. VERTICAL LINEARITY - OPTIONAL
4. BRIGHTNESS
5. HORIZONTAL CENTERING - OPTIONAL
6. WIDTH
7. FOCUS

4.2.2 CONTRAST CONTROL WILL BE MOUNTED EXTERNAL TO THE MONITOR.

4.3 DISTORTION

4.3.1 CONDITIONS OF MEASUREMENTS: UNLESS OTHERWISE STATED, ALL MEASUREMENTS SHALL BE MADE UNDER CONTROLLED LABORATORY CONDITIONS AFTER AN INITIAL WARM-UP PERIOD OF NOT LESS THAN 15 MINUTES. APPLIED POWER SHALL BE WITHIN THE LIMITS STATED IN PARAGRAPH 6.0. DATA SHALL BE PROVIDED FOR 24 ROWS OF 80 CHARACTER COLUMNS WITH BRIGHTNESS, CONTRAST AND FOCUS ADJUSTED FOR OPTIMUM VIEWING. ALL MEASUREMENTS WILL USE AS A LOCATION REFERENCE A PERIMETER OF CHARACTERS WITH OUTSIDE DOTS IN THE FIRST AND LAST ROWS AND COLUMNS.

4.3.2 MAXIMUM GEOMETRIC DISTORTION ALLOWED SHALL BE AS FOLLOWS: WHEN THE DISPLAY AREA OF THE CRT IS FILLED WITH CHARACTERS, THE OUTSIDE DOTS OF ALL OUTSIDE ROWS AND COLUMNS SHALL FALL WITHIN THE AREA DEFINED BY THE SPACE BETWEEN THE TWO RECTANGLES SHOWN IN FIGURE 4. THIS ALIGNMENT SHALL FULFILL PIN-CUSHIONING, BARRELING, PARALLELOGRAM AND TRAPEZOIDAL DISTORTION REQUIREMENTS FOR THE MONITOR DISPLAY.

4.3.3 HORIZONTAL AND VERTICAL LINEARITY SHALL BE AS FOLLOWS: USING THE LARGEST DIMENSION OF ANY CHARACTER AS A REFERENCE, NO CHARACTER SHALL BE LESS THAN 20 PERCENT SMALLER IN HEIGHT OR WIDTH. IN ADDITION, ADJACENT CHARACTERS SHALL NOT DIFFER IN HEIGHT OR WIDTH MORE THAN 10 PERCENT.

4.3.4 CHARACTER DISPLAY AREA AS DEFINED IN FIG. 4 SHALL NOT CHANGE HORIZONTAL OR VERTICAL DIMENSION MORE THAN 0.20 INCHES FOR ANY COMBINATION OF TEMPERATURE AND DC VOLTAGE VARIATIONS AS SET FORTH IN THIS SPECIFICATION.

| SIZE | CODE IDENT | | REV |
|---|---|---|---|
| A | 98438 | 132509 | C |
| SCALE | | SHEET 4 | |

5.0 RESOLUTION

5.1 CRT WITH ETCHED FACEPLATE - MEASUREMENTS TAKEN AT THE CENTER AND IN THE REGION OF THE FIGURE 4 RECTANGLE CORNERS.

| | |
|---|---|
| LIGHT OUTPUT: | 40 FOOT LAMBERTS |
| RESOLUTION: | CENTER 900 T.V. LINES |
| | CORNER 700 T.V. LINES |

PULSE RISE TIME, LESS THAN 20 NANOSECONDS FOR 30V RISE AT C.R.T. BANDWIDTH, WITHIN 3db FROM 10 HZ TO 25 MHZ.

6.0 POWER REQUIREMENTS

6.1 INPUT VOLTAGE SHALL BE +15.0 VOLT DC ± 10% AS NOMINAL.

6.2 INPUT CURRENT BE 1.0 AMPERES NOMINAL WITH A MAXIMUM PEAK CURRENT OF 1.5 AMPERES.

7.0 ENVIRONMENTAL REQUIREMENTS

7.1 TEMPERATURE

7.1.1 STORAGE TEMPERATURE, -20°C TO +65°C AMBIENT.

7.2 RELATIVE HUMIDITY,5% TO 95% RH NON-CONDENSING.

7.3 ALTITUDE

7.3.1 OPERATING ALTITUDE, SEA LEVEL TO 10,000 FEET.

7.3.2 NON-OPERATING ALTITUDE, SEA LEVEL TO 30,000 FEET.

| SIZE | CODE IDENT | | REV |
|---|---|---|---|
| A | 98438 | 132509 | C |
| SCALE | | SHEET 5 | |

Form # 10 1013

8.0 CERTIFICATION

8.1 UL APPROVAL

8.1.1 UNIT SHALL MEET THE REQUIREMENTS OF UL STANDARD UL-478 (ELECTRONIC DATA SYSTEMS) WHEN CONTAINED WITHIN A SUITABLE ENCLOSURE.

8.2 CSA APPROVAL

8.2.1 UNIT SHALL MEET THE REQUIREMENTS OF CSA STANDARD C22.2 NO. 154 (DATA PROCESSING EQUIPMENT) WHEN IN A SUITABLE ENCLOSURE.

8.3 X-RAY RADIATION

8.3.1 UNIT AS SPECIFIED SHALL COMPLY WITH THE "RADIATION CONTROL FOR HEALTH AND SAFETY ACTO OF 1968". FULL COMPLIANCE WITH DHEW RULES 21, CFR SUB-CHAPTER J AS APPLICABLE AT DATE OF MANUFACTURE.

8.4 RFI RADIATION

8.4.1 UNIT SHALL MEET FCC RULES AND REGULATIONS, VOLUME II, PART 15, DATED MAY 1966, DEFINING MAXIMUM ELECTROMAGNETIC RADIATION.

9.0 EQUIPMENT WARRANTY AND REPAIR

9.1 EQUIPMENT SHALL BE WARRANTED BY VENDOR TO LEAR SIEGLER, INC. FOR A PERIOD OF ONE YEAR. ANY WARRANTY REPAIR REQUIRED SHALL BE AT LEAR SIEGLER FACILITY. VENDOR'S WARRANTY SHALL ALLOW FOR A PERIOD OF UP TO SIX MONTHS DURING STORAGE AND ASSEMBLY BY LEAR SIEGLER, INC.

10.0 PACKAGING

10.1 MONITOR SHALL BE PACKAGED IN SUITABLE SHIPPING CONTAINERS TO PROVIDE PROTECTION DURING HANDLING AND TRANSPORTATION.

10.2 COMPONENT UNITS OF THE MONITOR CRT WITH YOKE, PCB ASSEMBLY, AND FLYBACK TRANSFORMER SHALL BE ORIENTATED IN THE INDIVIDUAL PACKING CARTON AS SHOWN IN FIG. 1.

| SIZE | CODE IDENT | | REV |
|---|---|---|---|
| A | 98438 | 132509 | C |
| SCALE | | SHEET 6 | |

11.0 REFERENCE DOCUMENTATION

11.1 VENDOR/SUPPLIER SHALL SUPPLY A COMPLETE DOCUMENTATION PACKAGE FOR THE UNIT SPECIFIED HEREIN, TO BE USED IN LSI MAINTENANCE MANUALS AND FOR UL SUBMITTAL.

11.2 DOCUMENTATION PACKAGE SHALL CONSIST OF:

SCHEMATIC DIAGRAMS
PC BOARD LAYOUT AND ASSEMBLY DRAWINGS
COMPONENT PARTS LISTS
COMPONENT SPECIFICATIONS

12.0 APPROVAL OF CHANGES

12.1 CHANGES OF MATERIALS, COMPONENT TYPE OR COMPONENT VALUE SHALL BE SUBMITTED TO LSI FOR APPROVAL 60 DAYS PRIOR TO INTENDED SHIP DATE. WRITTEN ACCEPTANCE FOR LSI OF CHANGES SHALL BE REQUIRED PRIOR TO SHIPMENT.

13.0 APPROVED VENDOR/SUPPLIER

13.1 FOLLOWING VENDOR/SUPPLIER HAS SUBMITTED UNITS THAT COMPLY WITH THE REQUIREMENTS OF THIS SPECIFICATION. SUBSEQUENT ORDERS SHALL COMPLY WITH THIS SPECIFICATION AND SHALL BE ACCEPTED IN ACCORDANCE WITH ATP 131574 CRT QUALITY SHALL BE ACCEPTED IN ACCORDANCE WITH 132421.

| LSI P/N | PHOSPHOR | VENDOR P/N* | VENDOR DWG.NO | VENDOR |
|---|---|---|---|---|
| 132509-001 | P4 | SM-12DN4KA | | SAMSUNG |
| 132509-002 | P31 | SM-12DN31KA | | SAMSUNG |
| 132509-003 | P4 | SM-12DN4KA | | SAMSUNG |
| 132509-004 | P31 | SM-12DN31KA | | SAMSUNG |

| SIZE | CODE IDENT | | REV |
|---|---|---|---|
| A | 98438 | 132509 | C |
| SCALE | | SHEET 7 | |

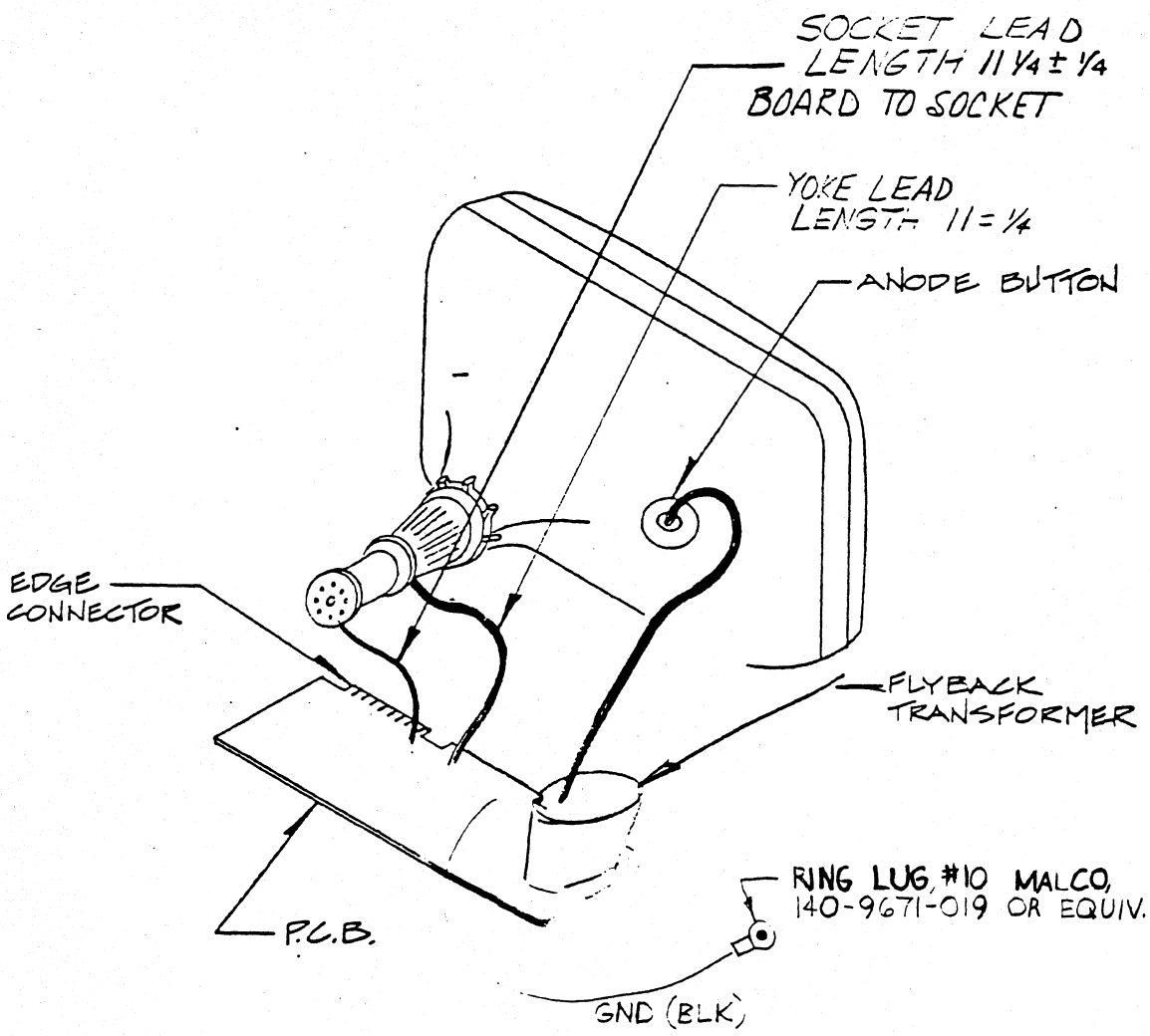


REAR VIEW OF C.R.T.

FIGURE 1

PACKAGING ARRANGEMENT

| SIZE | CODE IDENT | | REV |
|---|---|---|---|
| A | 98438 | 132509 | C |
| SCALE | | SHEET 8 | |

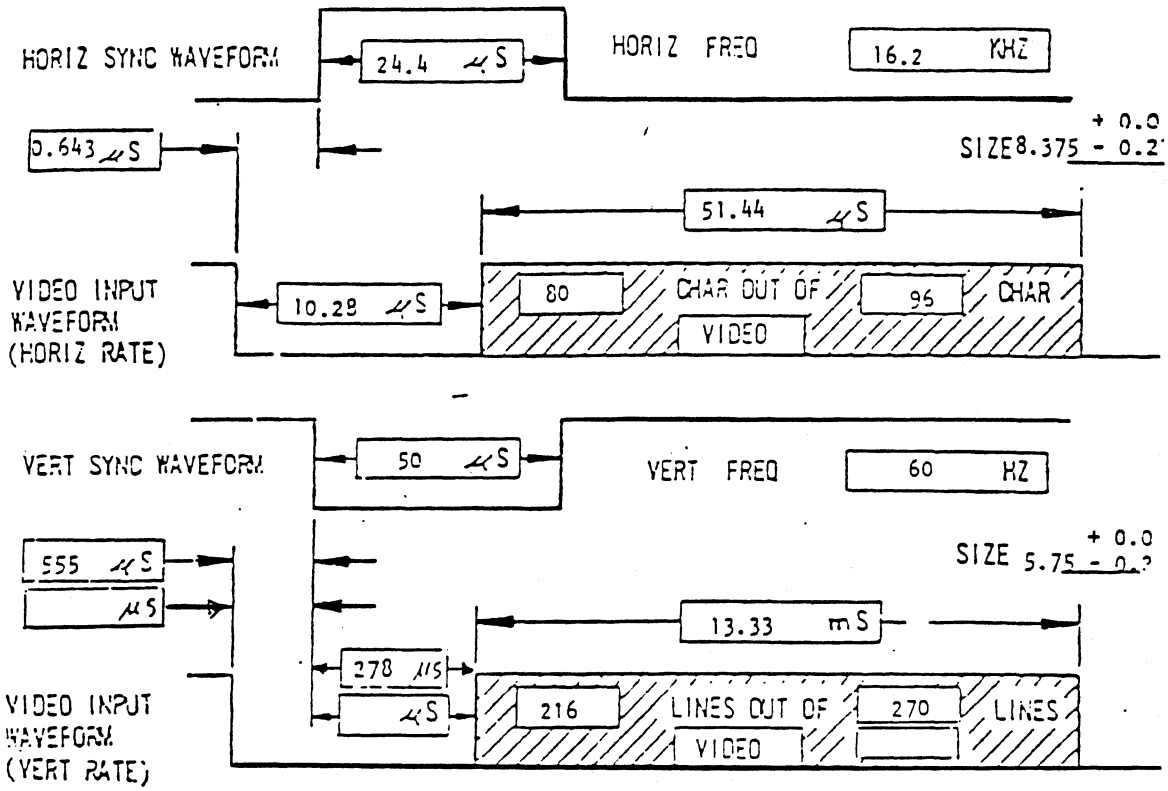


| | HORIZ | VERT |
|---|---|---|
| CHARACTER BLOCK | 7 | 9 |
| CHARACTER MATRIX | 5 | 7 |
| DOT RATE (MHZ) | 10.8864 | |

**FIGURE 2**

| SIZE | CODE IDENT | | REV |
|---|---|---|---|
| A | 98438 | 132509 | C |
| SCALE | | SHEET 9 | |

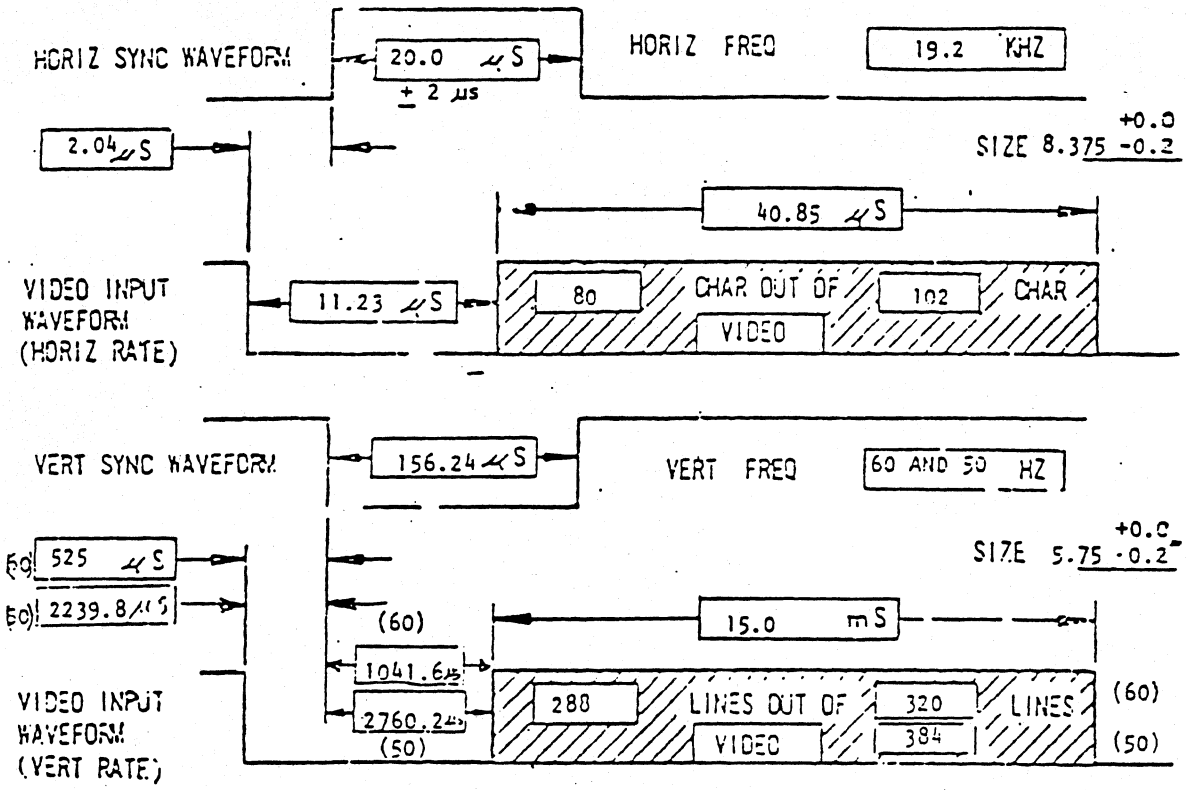


| | HORIZ | VERT |
|---|---|---|
| CHARACTER BLOCK | 10 | 12 |
| CHARACTER MATRIX | 7 | 9 |
| DOT RATE (MHZ) | 19 MHZ | |

**FIGURE 3**

| SIZE | CODE IDENT | | REV |
|---|---|---|---|
| A | 98438 | 132509 | C |
| SCALE | | SHEET 10 | |

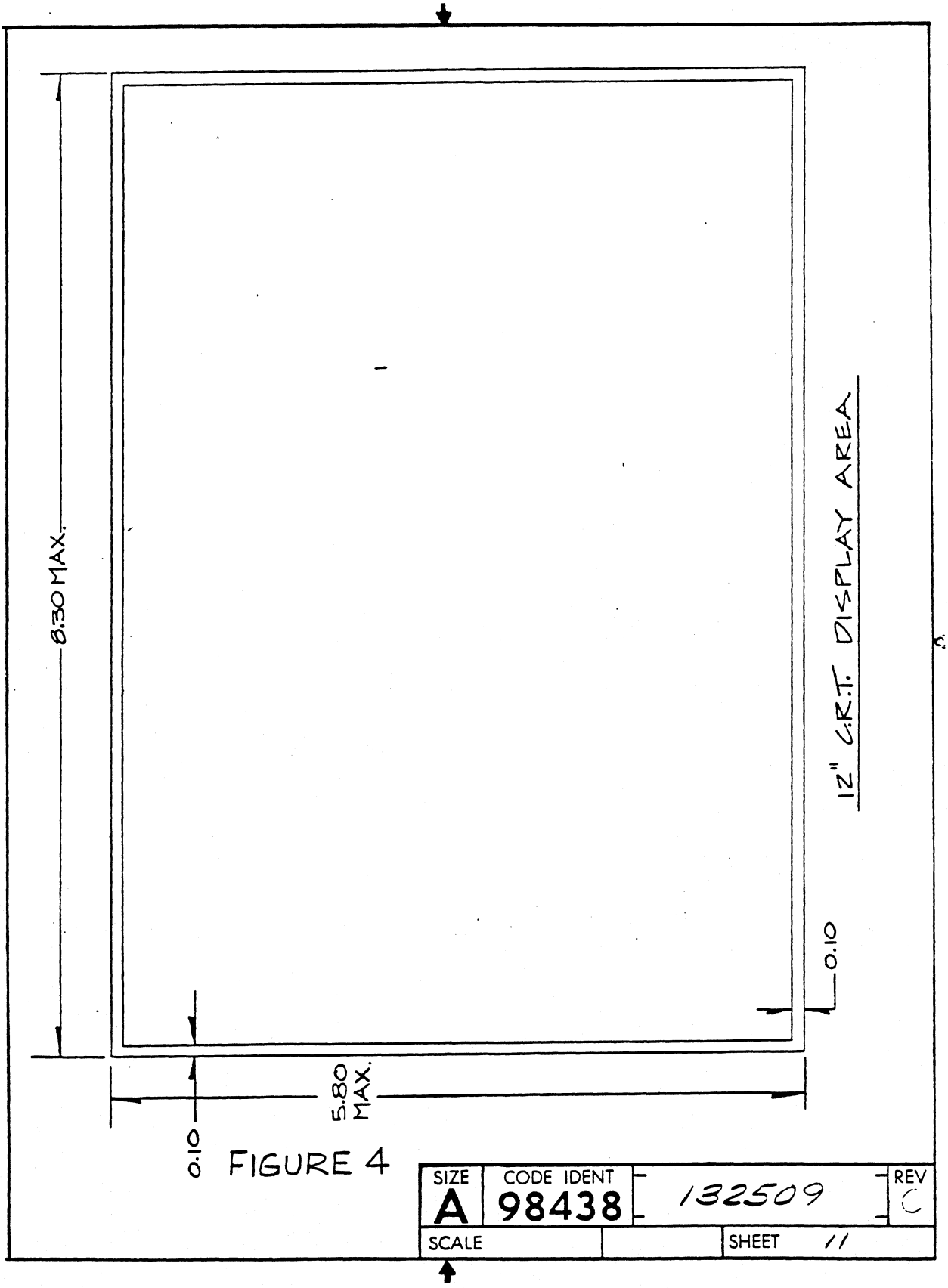


FIGURE 4

| SIZE | CODE IDENT | | REV |
|---|---|---|---|
| A | 98438 | 132509 | C |
| SCALE | | SHEET 11 | |

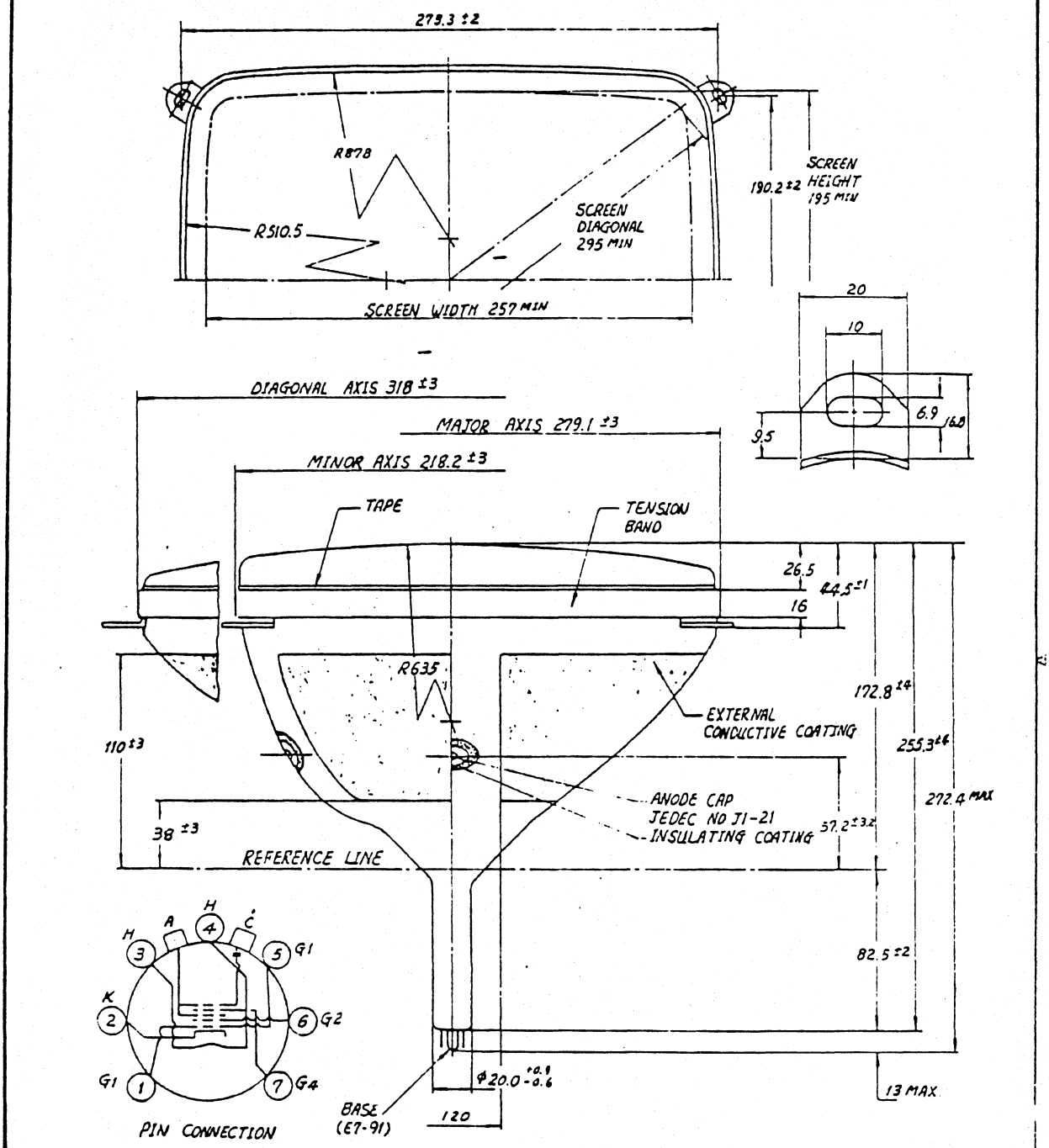


| SIZE | CODE IDENT | | REV |
|---|---|---|---|
| A | 98438 | 132509 | C |
| SCALE | | SHEET 12 | |

INCH
(mm)

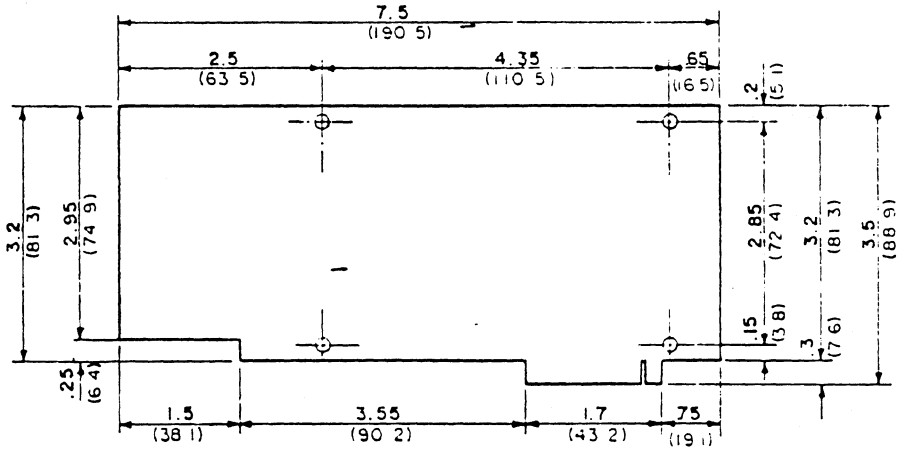


( COMPONENT SIDE VIEW )

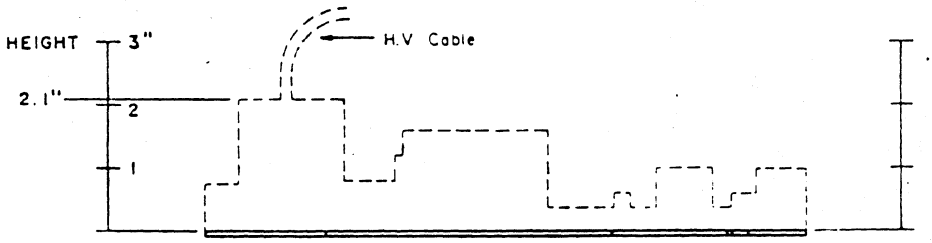


( FRONT SIDE VIEW )

FIGURE 6

| SIZE | CODE IDENT | | REV |
|---|---|---|---|
| A | 98438 | 132509 | C |
| SCALE | | SHEET 13 | |

| REV NO | DATE | BY | APPD | REVISION DESCRIPTION | ECO NO |
|---|---|---|---|---|---|
| | APR. 18 1991 | SHIN. W. S | | PRODUCTION RELEASE. | |

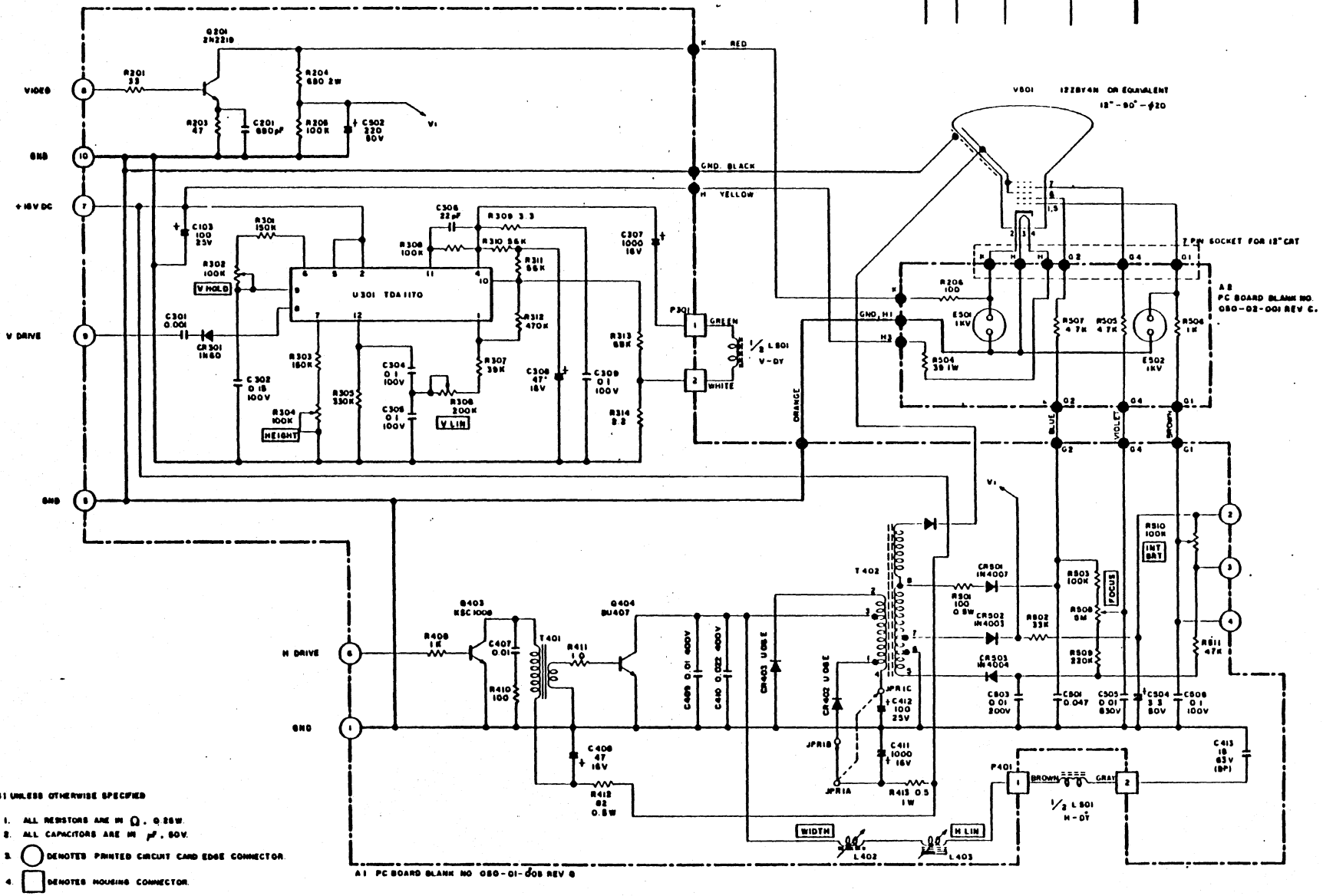


NOTES: UNLESS OTHERWISE SPECIFIED

1. ALL RESISTORS ARE IN Ω, 0.25W.
2. ALL CAPACITORS ARE IN μF, 50V.
3. ○ DENOTES PRINTED CIRCUIT CARD EDGE CONNECTOR.
4. □ DENOTES HOUSING CONNECTOR.
5. ● DIRECT

| | | | | | | |
|---|---|---|---|---|---|---|
| DATE | APR 9, 1991 | DRA | DESIGN | CHECK | APPD | SCHEMATIC 19" MONITOR SM-12DN4KA |
| SIZE | | | | | | |
| REV | | | | | | |

SAMSUNG ELECTRON DEVICES CO., LTD. COMPUTER DIVISION

SCALE: NONE

DRAWING NO.: 20-02-010

| REVISIONS | | | | |
|---|---|---|---|---|
| LTR | SHEET | DESCRIPTION | DATE | APPROVED |
| A | | RELEASE PER DCN 3261 | 12-7-81<br>12-15-81 | W. Kelly<br>J. Millatt |

TABLE OF CONTENTS


| | | |
|---|---|---|
| 1.0 | SCOPE | 2 |
| 2.0 | APPLICABLE DOCUMENTS | 2 |
| 3.0 | INPUT REQUIREMENTS | 2 |
| 4.0 | DISPLAY CHARACTERISTICS | 4 |
| 5.0 | POWER REQUIREMENTS | 6 |
| 6.0 | MECHANICAL REQUIREMENTS | 6 |
| 7.0 | PROTECTIVE FINISH | 6 |
| 8.0 | CERTIFICATIONS | 6 |
| 9.0 | ENVIRONMENTAL REQUIREMENTS | 7 |
| 10.0 | HUMAN FACTORS REQUIREMENTS | 7 |
| 11.0 | WARRANTY | 8 |
| 12.0 | REFERENCE DOCUMENTATION | 8 |
| 13.0 | CHANGES AFTER APPROVAL | 8 |
| 14.0 | APPROVED VENDOR | 9 |
| | FIG 1 CRT DISPLAY AREA | 9 |
| | FIG 2 TIMING DIAGRAM | 10 |
| | FIG 3 PHYSICAL OUTLINE FOR -001 & -002 | 11 |
| | FIG 4 PHYSICAL OUTLINE FOR -003 & -004 | 16 |
| | FIG 5 CRT OUTLINE | |
| | FIG 6A BARREL & PINCUSHION, 6B INCREMENTAL PIN & BARREL | |
| | FIG 7 A TRAPEZOID DISTOR (HOR), 7B TRAP DISTOR (VERTICAL) | |
| | FIG 8 PARRALLELOGRAM DISTORTION | |
| | FIG 9 YOKE TILT | |
| | FIG 10 PHOSPHOR EDGE A, A1 | |
| | FIG 11 PHOSPHOR EDGE B, B1 | |


| | | |
|---|---|---|
| | | |
| | | DL132760 |
| DASH NO. | NEXT ASSY | USED ON |
| APPLICATION | | |

| | | |
|---|---|---|
| UNLESS OTHERWISE SPECIFIED<br>DIM. IN INCHES<br>TOLERANCES<br>.X ± .1<br>.XX ± .03<br>.XXX ± .010<br>ANGLES ± 0.5°<br>MACH. FIN. √ | DR<br>CHK W. Kelly 12-7-81<br>DSGN<br>ENGR<br>PROJ 12.8.81<br>REL J. Millatt 12-15-81<br>CUSTOMER APPD | LEAR SIEGLER, INC.<br>ELECTRONIC INSTRUMENTATION DIV.<br>ANAHEIM, CALIF.<br>MONITOR, 15 INCH 27 VDC<br>SIZE A \| CODE IDENT 98438 \| 136069 \| REV A<br>SCALE \| SHEET 1 OF 15 |

FORM 10-103B

1.0 DESCRIPTION

THIS 15 INCH MONITOR IS TO BE USED IN A DATA DISPLAY TERMINAL. THE UNIT IS TO BE OPERATED IN THE DIRECT DRIVE OR SYNC MODE AND ON +27 VDC SUPPLIED BY LSI.

2.0 APPLICABLE DOCUMENTS

2.1 LSI DRAWINGS

129794-002 MONITOR MOUNTING BRACKET
132818-001 MONITOR MOUNTING BRACKET

3.0 INPUT REQUIREMENTS

3.1 INPUT CONNECTOR FOR DIRECT DRIVE

3.1.1 CONNECTOR PIN OUT

PIN 1 GROUND
2 UNUSED
3 UNUSED
4 UNUSED
5 UNUSED
6 HORIZONTAL SYNC
7 +27 VDC
8 VIDEO SIGNAL
9 VERTICAL SYNC
10 GROUND

3.1.2 CONNECTOR IS OF THE PRINTED CIRCUIT EDGE TYPE WITH 0.156 INCH CENTER TO CENTER CONTACT SPACING AND 0.054 TO 0.071 INCH PRINTED CIRCUIT BOARD THICKNESS.

3.1.3 THE MATING CONNECTOR SHALL BE A SINGLE READOUT TYPE WITH 10 CONTACTS AND EQUIVALENT TO AN AMPHERNOL TYPE 225-210031-101.

3.2 VIDEO INPUT CHARACTERISTICS

3.2.1 THE INPUT IMPEDANCE SHALL BE 2.0K OHM MINIMUM SHUNTED BY 60 PF MAX AT A DOT RATE OF 14.728 AND 24.3 MHz.

3.2.2 INPUT VIDEO SIGNAL LEVELS SHALL BE ZERO TO 0.04 VOLTS FOR BLACK. THE LEVEL SHALL BE ADJUSTABLE BUT NOT TO EXCEED 5.0 VOLTS FOR WHITE LEVEL.

3.2.3 VIDEO DOT TIMING

| SIZE | CODE IDENT | | REV |
|---|---|---|---|
| A | 98438 | 136069 | A |
| SCALE | | SHEET 2 | |

3.2.3.1 THE TIMING FOR A DOT, WHEN DISPLAYING STANDARD VIDEO, SHALL BE A 101.84 NSEC AND 61.73 NSEC +50% WIDE POSITIVE PULSE WITH RISE AND FALL TIMES OF LESS THAN 10 NSEC.

STANDARD VIDEO SHALL BE DEFINED AS DISPLAYING WHITE DOTS ON A BLACK BACKGROUND.

3.2.3.2 THE TIMING FOR A DOT, WHEN DISPLAYING REVERSE VIDEO, SHALL BE A 67.89 AND 41.15 NSEC. WIDE NEGATIVE PULSE WITH RISE AND FALL TIMES OF LESS THAN 10 NSEC. REVERSE VIDEO SHALL BE DEFINED AS DISPLAYING BLACK DOTS ON A WHITE BACKGROUND.

3.3 ! VERTICAL SYNC INPUT CHARACTERISTICS

3.3.1 THE INPUT LOADING SHALL BE COMPATIBLE TO 74 S SERIES TTL LOGIC CIRCUITS.

3.3.2 THE PULSE AMPLITUDE SHALL BE A LOW LEVEL OF 0.0 TO +0.4 VOLTS AND A HIGH LEVEL OF 4.0 ± 1.5 VOLTS.

3.3.3 THE PULSE RATE SHALL BE EITHER 50 OR 60 PULSES PER SECOND ± 1%.

3.3.34 THE PULSE RISE AND FALL TIMES SHALL BE EQUAL TO OR LESS THAN 100 NSEC.

3.3.5 THE VERTICAL CIRCUIT SHALL ACCEPT THE PULSE FORMAT GIVEN IN FIGURE 2.

3.4 HORIZONTAL SYNC INPUT CHARACTERISTICS.

3.4.1 THE INPUT LOADING SHALL BE COMPATIBLE TO 74 S SERIES TTL LOGIC CIRCUITS.

3.4.2 THE PULSE AMPLITUDE SHALL BE A LOW LEVEL OF 0.0 TO +0.4 VOLTS AND A HIGH LEVEL OF 4.0 ± 1.5 VOLTS.

3.4.3 THE PULSE RATE SHALL BE 19.2K PER SECOND ± 1%.

3.4.4 THE PULSE RISE AND FALL TIME SHALL BE EQUAL TO OR LESS THAN 50 NSEC.

3.4.5 THE HORIZONTAL CIRCUITS SHALL ACCEPT THE PULSE FORMAT GIVEN IN FIGURE 2.

4.0 DISPLAY CHARACTERS

4.1 CATHODE RAY TUBE

4.1.1 THE CATHODE RAY TUBE (CRT) SHALL BE FIFTEEN INCH DIAGONAL MEASUREMENT. SEE FIGURE 5 FOR OUTLINE.

| SIZE | CODE IDENT | | REV |
|---|---|---|---|
| A | 98438 | 136069 | A |
| SCALE | | SHEET 3 | |

4.1.2 THE CRT SHALL BE SUPPLIED WITH P-4 PHOSPHOR (136069-001) OR P-31 PHOSPHOR (136069-002) OR AMBER (136069-003).

4.1.3 THE CRT SHALL HAVE A DEFLECTION ANGLE OF 110°.

4.1.4 THE CRT SHALL BE SUPPLIED WITH A "T" BAND TO MEET U.L. IMPLOSION PROTECTION REQUIREMENTS WITH FORWARD FACING EARS.

4.1.5 THE CRT SHALL HAVE A DISPLAY AREA AS SHOWN IN FIGURE 1.

4.1.6 THE CRT SHALL HAVE A FACEPLATE WITH DARK TINTED GLASS HAVING LIGHT TRANSMISSION "T" SUCH THAT 40% T 60% COMMON ON -001, -002, -003,

4.1.7 GLOSS - THE FACEPLATE SHALL HAVE A GLOSS READING OF 54±6 GLOSS UNITS MEASURED WITH A GARDNER LABORATORY 60° GLOSS METER.

4.2 CONTROLS

4.2.1 THE INTERNAL CONTROLS PROVIDED WITHIN THE UNIT SHALL CONSIST OF THE FOLLOWING:

-HEIGHT
-VERTICAL SYNC
-VERTICAL LINEARITY
-BRIGHTNESS
-HORIZONTAL CENTERING
-WIDTH
-FOCUS
-HORIZONTAL SYNC
-24 VOLT ADJUST

| SIZE | CODE IDENT | | REV |
|---|---|---|---|
| A | 98438 | 136069 | A |
| SCALE | | SHEET 4 | |

4.3 DISTORTION

4.3.1 CONDITIONS OF MEASUREMENT: UNLESS OTHERWISE STATED, ALL MEASUREMENTS SHALL BE MADE UNDER CONTROLLED LABORATORY CONDITIONS AFTER ALL INITIAL WARM-UP PERIOD OF 5 TO 8 MINUTES. APPLIED POWER SHALL BE WITHIN THE LIMITS STATED IN PARAGRAPH 5.0. DATA SHALL BE PROVIDED FOR 25 ROWS OF 80 CHARACTER COLUMNS OF CHARACTERS. THE REMOTE BRIGHTNESS CONTROL SHALL BE ADJUSTED TO THE POINT JUST BEFORE THE RASTER IS VISIBLE. THE LIGHT OUTPUT OF THE MONITOR SHALL BE ADJUSTED TO 3.0 FOOT LAMBERTS ±0.5 FT. LAM. (MEASURED ON A WESTON 759 LIGHT METER OR EQUIVALENT) BY THE CONTRAST CONTROL. AVERAGE LIGHT OUTPUT SHALL BE MEASURED WITH A FULL PAGE OF CHARACTERS WITH 30% DOTS LIT. THE FOCUS CONTROL SHALL BE ADJUSTED FOR BEST OVERALL FOCUS.

4.3.2 MAXIMUM GEOMETRIC DISTORTION ALLOWED SHALL BE:

4.3.2.1 PIN AND BARREL - DEFINED AS THE CURVATURE OF THE VIDEO CHARACTER ON TOP/BOTTOM OR SIDES.

4.3.2.1.1 LIMITS FOR TOP/BOTTOM ARE 1.0% OF THE HORIZONTAL SIZE OR T=0.10 INCHES MAXIMUM.

4.3.2.1.2 LIMITS FOR SIDE ARE S=0.075 INCH MAX.

4.3.2.1.3 INCREMENTAL PIN AND BARREL (I) = 0.020 INCH MAX/INCH.

4.3.2.1.4 REFERENCE FIGURE 6A AND 6B.

4.3.2.2 TRAPEZOIDAL DISTORTION - DEFINED AS THE DIFFERENCE IN THE VIDEO HEIGHT OR WIDTH.

4.3.2.2.1 LIMITS ON THE TOP/BOTTOM (HORIZONTAL) ARE H.T.D. = $W-W_1=0.1$ MAX.

4.3.2.2.2 LIMITS ON SIDES (VERTICAL) ARE $VTD=V-V_1=0.1$ MAX.

4.3.2.2.3 REFERENCE FIGURE 7A AND 7.

4.3.2.3 PARALLELOGRAM DISTORTION - DEFINED AS THE DIFFERENCE FROM A TRUE 90 DEGREE ANGLE OF THE VIDEO PRESENTATION.

4.3.2.3.1 LIMITS ON THE PARALLELOGRAM DISTORTION $P-P_1=0.1$ MAX. (USING GAUGE SHOWN IN FIGURE 7 IN DETAILED INSTRUCTIONS).

4.3.2.3.2 REFERENCE FIGURE 8.

4.3.2.4 YOKE TILT - DEFINED AS THE DEVIATION OF THE CENTER ROW OF CHARACTERS FROM A MOUNTING PLANE.

| SIZE | CODE IDENT | | REV |
|---|---|---|---|
| A | 98438 | 136069 | A |
| SCALE | | SHEET 5 | |

4.3.2.4.1 LIMITS ON TILT ARE T=0.100 INCH MAX. (USING GAUGE SHOWN IN FIGURE 4 AND TEST PROCEDURE NO. 2).

4.3.2.4.2 REFERENCE FIGURE 9.

4.3.2.5 VERTICAL RASTER CENTERING - DEFINED AS AN UNBLANKED RASTER BEING CENTERED TO THE PHOSPHOR EDGE OF THE CRT.

4.3.2.5.1 LIMITS FOR VERTICAL RASTER CENTERING ARE V.R.C=A-$A_1$=0.250 INCH MAX.

4.3.2.5.2 REFERENCE FIGURE 10.

4.3.2.6 HORIZONTAL RASTER CENTERING.

4.3.2.6.1 LIMITS FOR HORIZONTAL RASTER CENTERING ARE H.R.C.=B-$B_1$= 0.250 INCH MAX.

4.3.2.6.2 REFERENCE FIGURE 11.

4.3.2.7 VIDEO SIZE - DEFINED AS ACTIVE VIDEO DISPLAY SIZE AFTER 5 MINUTES OF WARM-UP, AT THE CENTER OF THE VIDEO PRESENTATION.

4.3.2.7.1 VERTICAL SIZE = V=7.15 INCH±0.125 INCH.

4.3.2.7.2 HORIZONTAL SIZE - W=9.90 INCH±0.125 INCH.

4.3.2.7.3 REFERENCE FIGURE 1.

NOTE: GEOMETRY MEASUREMENTS MUST BE MADE WITH THE CRT PHOSPHOR FACING EAST TO THE CRT NECK FACING WEST.

## 5.0 POWER REQUIREMENTS

5.1 THE INPUT VOLTAGE SHALL BE +27 VOLTS D.C.

5.2 THE INPUT CURRENT SHALL BE 0.9 AMPERES NOMINAL WITH A MAXIMUM PEAK CURRENT OF 1.1 AMPERES.

## 6.0 MECHANICAL REQUIREMENTS

6.1 PHYSICAL SIZE SHALL BE PER FIGURE 4 OF THIS SPECIFICATION. THE ELECTRONICS SHALL BE MOUNTED WITH CARRIER PLATE 129794-002 AND ADAPTER BRACKETS 132818-001 & 002 OR EQUIVALENT.

| SIZE | CODE IDENT | | REV |
|---|---|---|---|
| A | 98438 | 136069 | A |
| SCALE | | SHEET 6 | |

7.0 PROTECTIVE FINISH

7.1 PROTECTIVE FINISHES SHALL BE PROVIDED ON ALL MATERIAL AND COMPONENTS WHICH MAY BE ADVERSELY AFFECTED BY THE ENVIRONMENTAL CONDITIONS SPECIFIED HEREIN.

8.0 CERTIFICATIONS

8.1 THE UNIT SHALL BE DESIGNED AND MANUFACTURED TO MEET THE REQUIREMENTS OF U.L. 478, (ELECTRONIC DATA PROCESSING UNITS AND SYSTEMS) UNDERWRITERS LABORATORIES, INC. STANDARDS OF SAFETY, WHEN CONTAINED WITHIN A SUITABLE ENCLOSURE.

8.2 C.S.A. APPROVAL

8.2.1 THE UNIT SHALL BE DESIGNED AND MANUFACTURED TO MEET THE REQUIREMENTS OF C.S.A. STANDARD C22.2 NO. 154.

9.0 ENVIRONMENTAL REQUIREMENTS

9.1 TEMPERATURE

9.1.1 THE OPERATING TEMPERATURE MINIMUM AND MAXIMUM SHALL BE 0°C. AND 50°C. AMBIENT.

9.1.2 THE STORAGE TEMPERATURE MINIMUM AND MAXIMUM SHALL BE -20°C. AND +65°C. AMBIENT.

9.2 RELATIVE HUMIDITY

9.2.1 THE OPERATING RELATIVE HUMIDITY SHALL BE 5 TO 90 PERCENT (NON-CONDENSING) WITH A GRADIENT EQUAL TO OR LESS THAN 10% PER HOUR.

9.3 ALTITUDE

9.3.1 THE OPERATING ALTITUDE SHALL BE SEA LEVEL TO L0,000 FEET.

9.3.2 THE NON-OPERATING ALTITUDE SHALL BE SEA LEVEL UP TO 30,000 FEET.

10.0 HUMAN FACTORS REQUIREMENTS

10.1 X-RAY RADIATION

10.1.1 THE UNIT AS SPECIFIED SHALL COMPLY WITH THE "RADIATION CONTROL FOR HEALTH AND SAFETY ACT OF 1968".

| SIZE | CODE IDENT | | REV |
|---|---|---|---|
| A | 98438 | 136069 | A |
| SCALE | | SHEET 7 | |

10.2 RFI RADIATION

10.2.1 THE UNIT SHALL MEET FCC RULES AND REGULATIONS, IN ACCORDANCE WITH FCC COMPUTING DEVICES DOCKET NO. 20780.

11.0 WARRANTY

THE EQUIPMENT SOLD TO LEAR SIEGLER, INC. SHALL BE WARRANTED BY THE VENDOR FOR A PERIOD OF ONE YEAR FROM THE DATE OF THE VENDOR'S SHIPMENT AGAINST DEFECTS IN MATERIAL AND WORKMANSHIP UNDER NORMAL USE AND OPERATION.

12.0 REFERENCE DOCUMENTATION

12.1 THE VENDOR SHALL BE REQUIRED TO SUPPLY A COMPLETE DOCUMENTATION PACKAGE FOR THE UNIT SPECIFIED HEREIN. THE DOCUMENTATION MAY BE USED IN LSI MAINTENANCE MANUALS FOR U.L. SUBMITTAL.

12.2 DOCUMENTATION PACKAGE SHALL CONSIST OF:

SCHEMATIC DIAGRAMS
PC BOARD LAYOUT AND ASSEMBLY DRAWINGS
COMPONENT PARTS LISTS
COMPONENT SPECIFICATIONS OR REPLACE PARTS INTO.
TRANSFER AND PC BOARD MATERIAL SPECIFICATION FOR U.L. SUBMITTAL

13.0 CHANGES AFTER APPROVAL

13.1 CHANGES OF MATERIAL, COMPONENT TYPE, VALUE, OR SOURCE OF SUPPLY SHALL BE SUBMITTED TO LSI 60 DAYS PRIOR TO INTENDED SHIP DATE FOR APPROVAL. WRITTEN ACCEPTANCE FROM LSI PRIOR TO SHIPMENT IS REQUIRED. DOCUMENTATION OF CHANGES MAY BE SUBMITTED CONCURRENT WITH SHIPMENT.

14.0 APPROVED VENDOR

14.1 THE FOLLOWING VENDOR HAS SUBMITTED UNITS THAT COMPLY WITH THE REQUIREMENTS OF THIS SPECIFICATION. SUBSEQUENT ORDERS SHALL COMPLY WITH THIS.

| SIZE | CODE IDENT | | REV |
|---|---|---|---|
| A | 98438 | 136069 | A |
| SCALE | | SHEET 8 | |

| LSI PART NO. | DESCRIPTION | VENDOR P/N | VENDOR |
|---|---|---|---|
| 136069-001 | MONITOR, P4 | DS4920-101B | MOTOROLA |
| 136069-002 | MONITOR, P-31 | DS4920-301B | MOTOROLA |
| 136069-003 | MONITOR, AMBER | | |

14.2 VENDOR ADDRESS:

MOTOROLA, INC.
DATA PRODUCTS

| SIZE | CODE IDENT | | REV |
|---|---|---|---|
| A | 98438 | 136069 | A |
| SCALE | | SHEET 9 | |

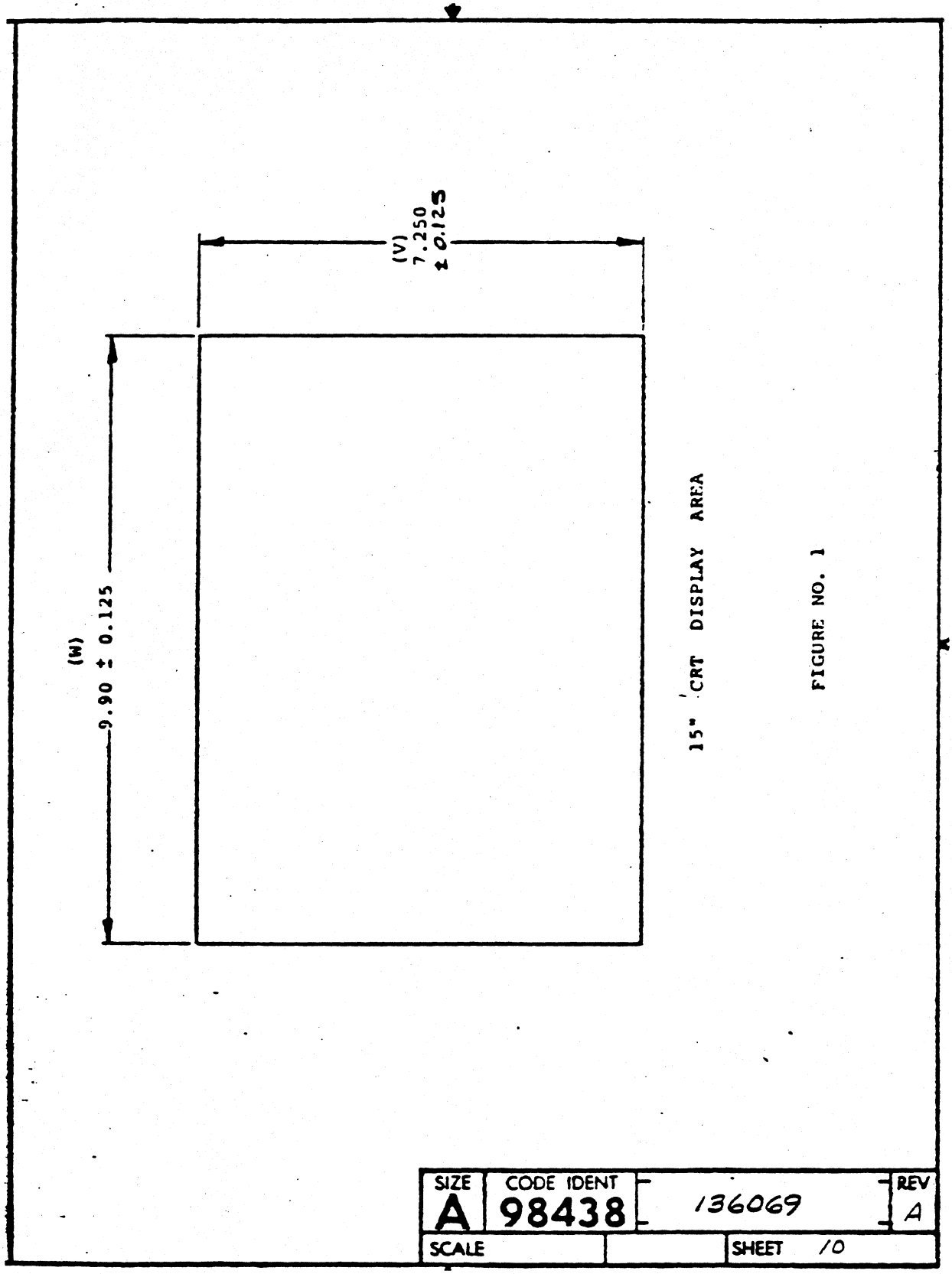
(V)
7.250
± 0.125
(W)
9.90 ± 0.125
15" CRT DISPLAY AREA
FIGURE NO. 1
SIZE
A
CODE IDENT
98438
136069
REV
A
SCALE
SHEET 10

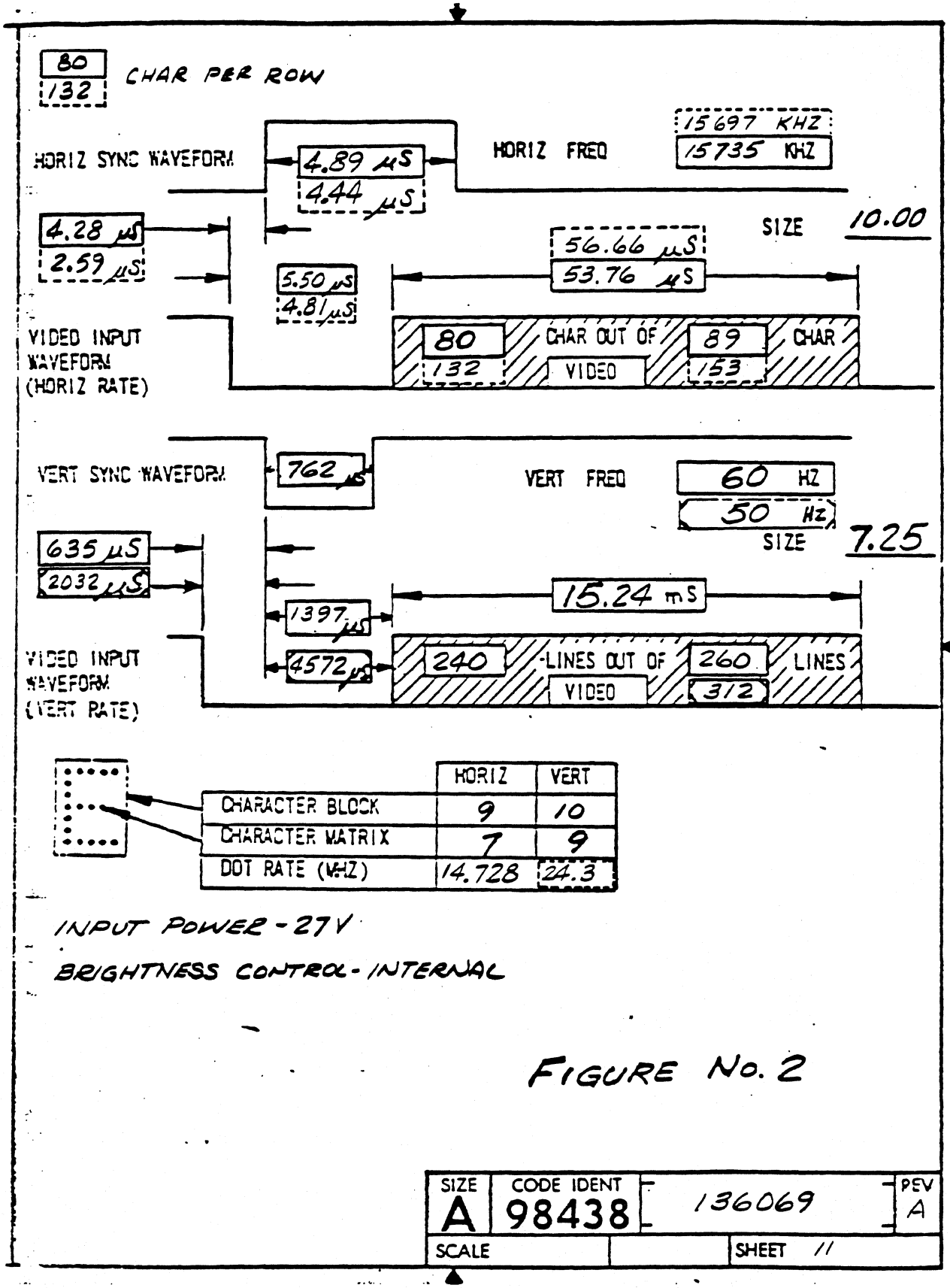


| | HORIZ | VERT |
|---|---|---|
| CHARACTER BLOCK | 9 | 10 |
| CHARACTER MATRIX | 7 | 9 |
| DOT RATE (MHZ) | 14.728 | 24.3 |

INPUT POWER - 27V

BRIGHTNESS CONTROL - INTERNAL

FIGURE No. 2

| SIZE | CODE IDENT | | REV |
|---|---|---|---|
| A | 98438 | 136069 | A |
| SCALE | | SHEET 11 | |

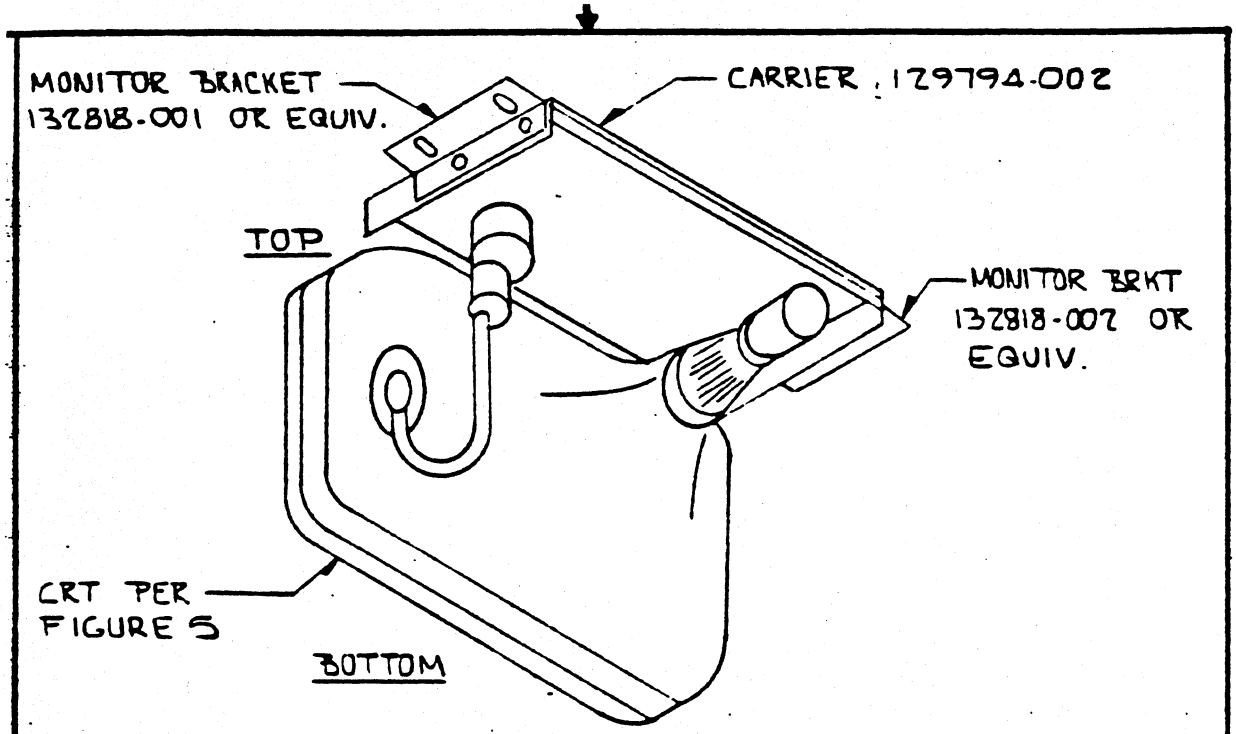


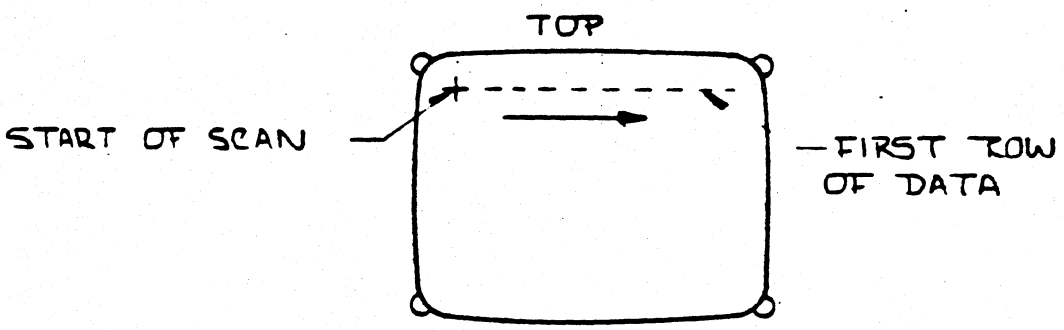


CRT FACE VIEW

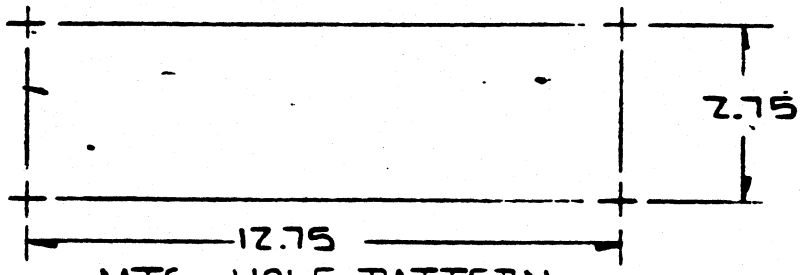


MTG HOLE PATTERN

FIGURE NO 3
PHYSICAL OUTLINE

| SIZE | CODE IDENT | | REV |
|---|---|---|---|
| A | 98438 | 136069 | A |
| SCALE | | SHEET 12 | |

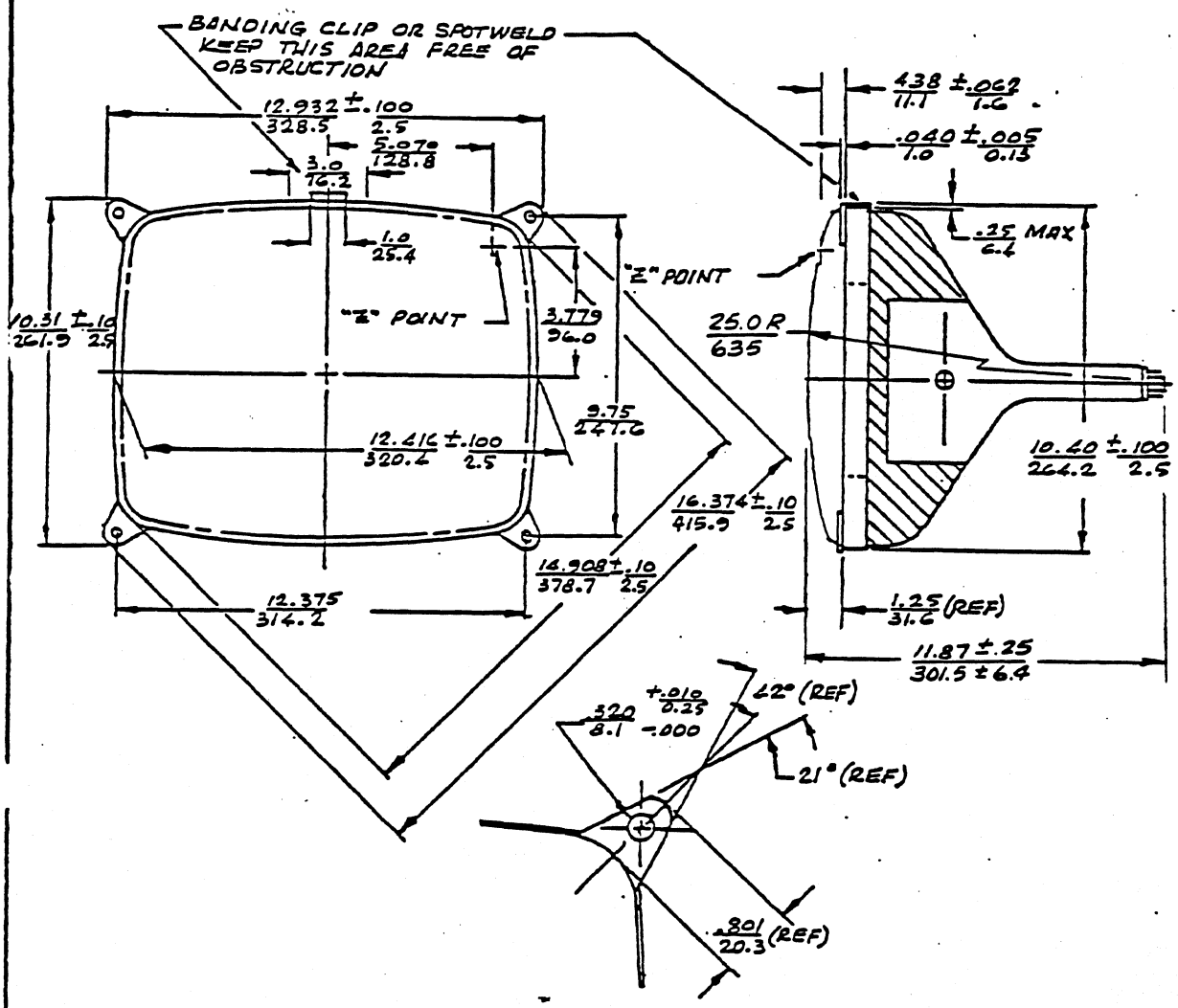


EAR DETAIL

NOTE:

THE EARS SHALL FIT OVER (4) .170 ± .002 DIA. PINS LOCATED WITH THEIR CENTERS AT THE CORNERS OF A 12.375 ± .005 BY 9.750 ± .005 RECTANGLE.

FIGURE 5

| SIZE | CODE IDENT | | REV. |
|---|---|---|---|
| A | 98438 | 136069 | A |
| SCALE | | SHEET 13 | |

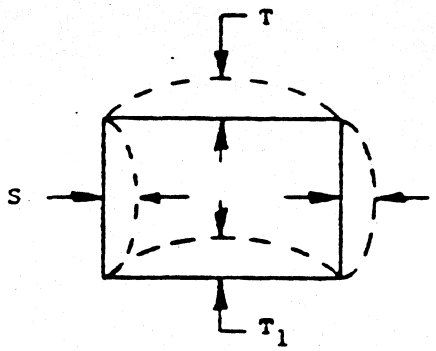


BARREL AND PINCUSHION

FIGURE 6A

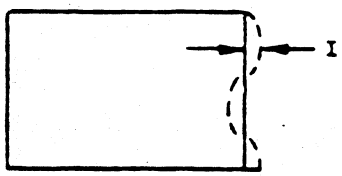


INCREMENTAL PIN AND BARREL

FIGURE 6B

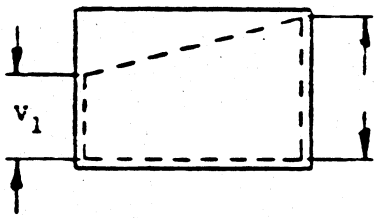


TRAPEZOID DISTORTION (HORIZONTAL)

FIGURE 7A

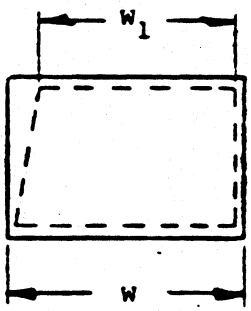


TRAPEZOID DISTORTION (VERTICAL)

FIGURE 7B

| SIZE | CODE IDENT | | REV |
|---|---|---|---|
| A | 98438 | 136069 | A |
| SCALE | | SHEET 14 | |

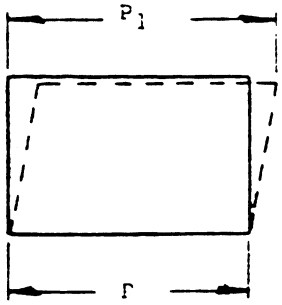


PARALLELOGRAM DISTORTICS

FIGURE 8

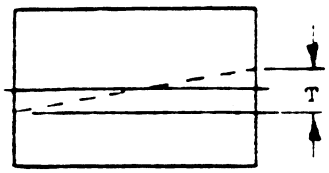


YOKE TILT

FIGURE 9

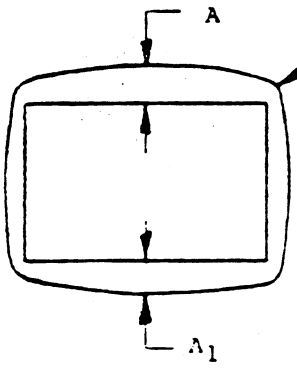


PHOSPHOR EDGE

FIGURE 10

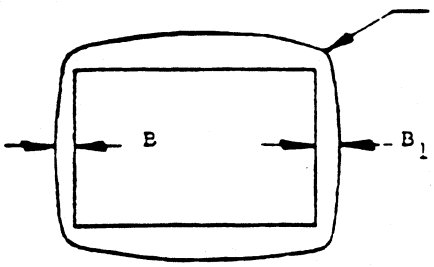


PHOSPHOR EDGE

FIGURE 11

| SIZE | CODE IDENT | | REV |
|---|---|---|---|
| A | 98438 | 136069 | A |
| SCALE | | SHEET 15 | |

| REVISIONS | | | | |
|---|---|---|---|---|
| LTR | SHEET | DESCRIPTION | DATE | APPROVED |
| | | | 12-1-82 | |

WITH DCN - 3598, 3824, 3919, 3945, 4016, 4161, 4185, 4236

REFERANCE LIST ONLY

| DASH NO. | NEXT ASSY | USED ON |
|---|---|---|
| | | |
| | | |

APPLICATION

| | | |
|---|---|---|
| UNLESS OTHERWISE SPECIFIED DIM. IN INCHES TOLERANCES X ± .1 .XX ± .03 .XXX ± .010 ANGLES ± 0.5° MACH. FIN. √ | DR | LEAR SIEGLER, INC. DATA PRODUCTS DIV. CUSTOMER SERVICE DEPARTMENT |
| | CHK | |
| | DSGN | KEYBOARD ASSY ADM 36 COMPLETE |
| | ENGR | |
| | PROJ | |
| | REL | SIZE A \| CODE IDENT 98438 \| REF 132766 \| REV |
| | CUSTOMER APPD | SCALE . \| SHEET 1 OF 2 |

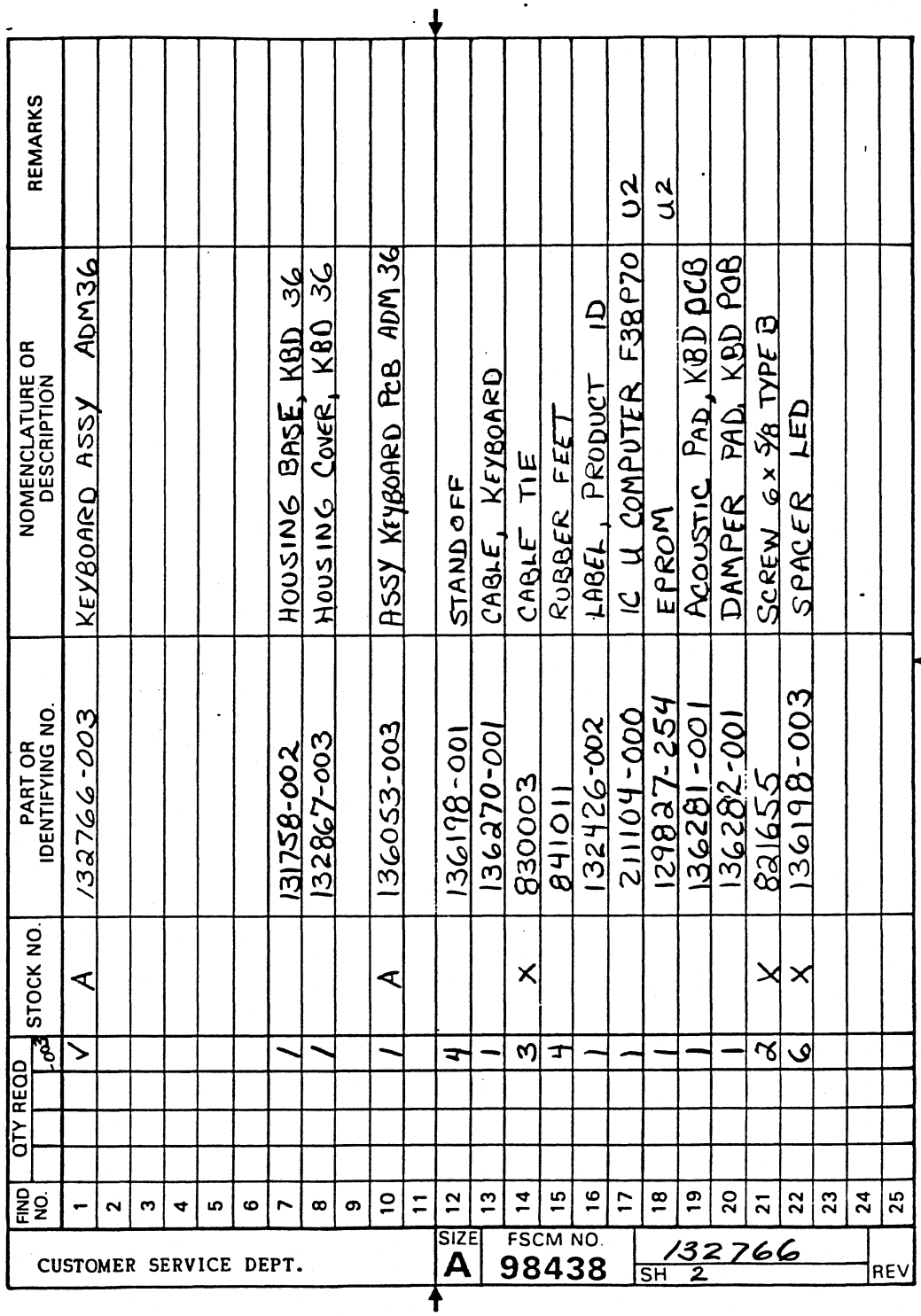

| FIND NO. | QTY REQD | STOCK NO. | PART OR IDENTIFYING NO. | NOMENCLATURE OR DESCRIPTION | REMARKS |
|---|---|---|---|---|---|
| 1 | V | A | 132766-003 | KEYBOARD ASSY ADM36 | |
| 7 | 1 | | 131758-002 | HOUSING BASE, KBD 36 | |
| 8 | 1 | | 132867-003 | HOUSING COVER, KBD 36 | |
| 10 | 1 | A | 136053-003 | ASSY KEYBOARD PCB ADM 36 | |
| 12 | 4 | | 136198-001 | STANDOFF | |
| 13 | 1 | | 136270-001 | CABLE, KEYBOARD | |
| 14 | 3 | X | 830003 | CABLE TIE | |
| 15 | 4 | | 841011 | RUBBER FEET | |
| 16 | 1 | | 132426-002 | LABEL, PRODUCT ID | |
| 17 | 1 | | 211104-000 | IC U COMPUTER F38P70 | U2 |
| 18 | 1 | | 129827-254 | EPROM | U2 |
| 19 | 1 | | 136281-001 | ACOUSTIC PAD, KBD PCB | |
| 20 | 1 | | 136282-001 | DAMPER PAD, KBD PCB | |
| 21 | 2 | X | 821655 | SCREW 6 x 5/8 TYPE B | |
| 22 | 6 | X | 136198-003 | SPACER LED | |

CUSTOMER SERVICE DEPT. | SIZE A | FSCM NO. 98438 | 132766 | SH 2 | REV

| REVISIONS | | | | |
|---|---|---|---|---|
| LTR | SHEET | DESCRIPTION | DATE | APPROVED |
| | | | 6-8-82 | |

REFERANCE LIST ONLY

| DASH NO. | NEXT ASSY | USED ON |
|---|---|---|
| | | |
| | | |
| | | |

APPLICATION

| | | |
|---|---|---|
| UNLESS OTHERWISE SPECIFIED DIM. IN INCHES TOLERANCES X ± .1 XX ± .03 XXX ± .010 ANGLES ± 0.5° MACH. FIN. √ | DR | LEAR SIEGLER, INC. DATA PRODUCTS DIV. CUSTOMER SERVICE DEPARTMENT |
| | CHK | |
| | DSGN | ASSY PCB KEYBOARD ADM 36 |
| | ENGR | |
| | PROJ | |
| | REL | SIZE A · CODE IDENT 98438 · (REF 132773) REF 136053 · REV |
| | CUSTOMER APPD | SCALE · SHEET 1 OF |

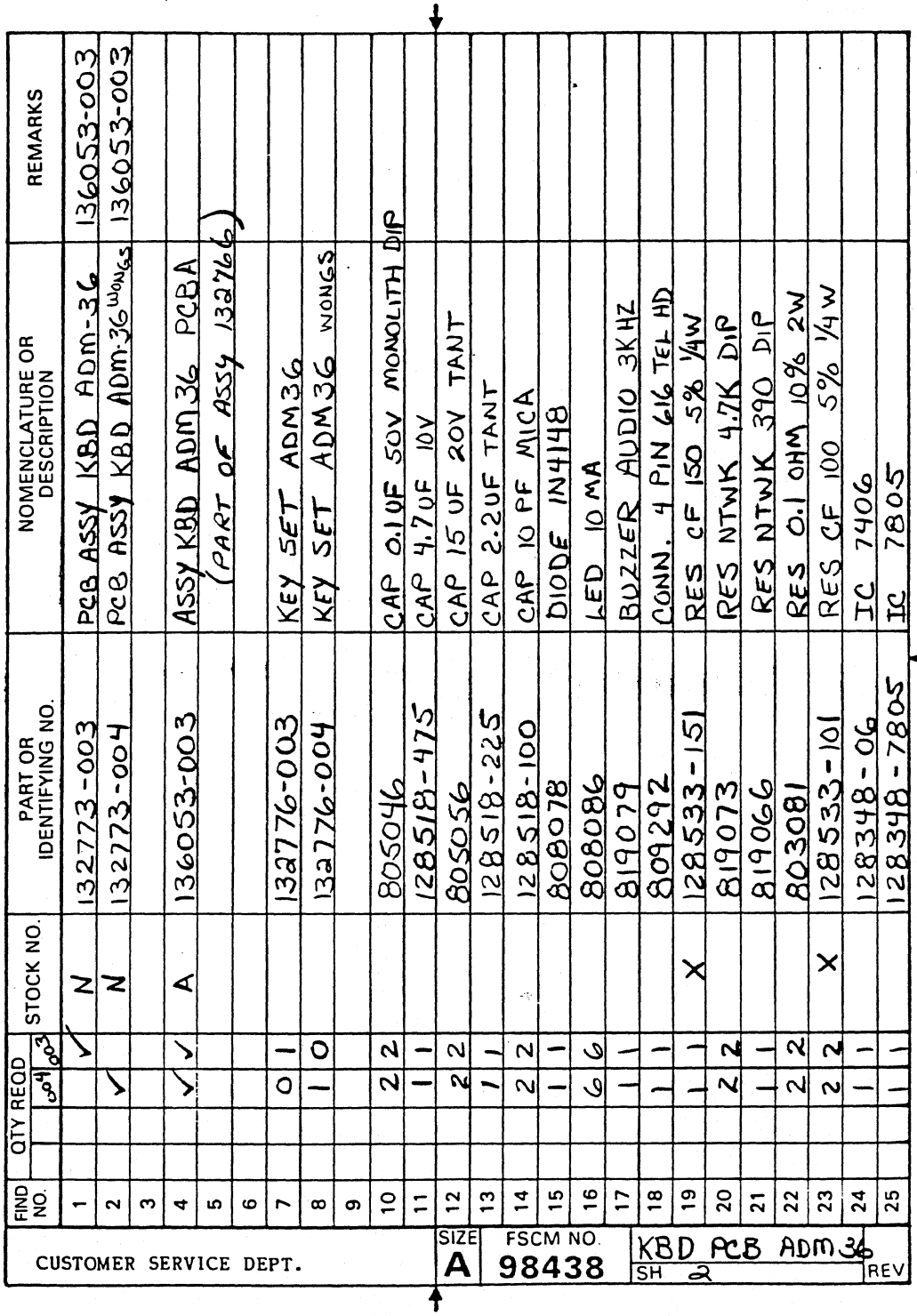

| FIND NO. | QTY REQD 004 | QTY REQD 003 | STOCK NO. | PART OR IDENTIFYING NO. | NOMENCLATURE OR DESCRIPTION | REMARKS |
|---|---|---|---|---|---|---|
| 1 | | ✓ | N | 132773-003 | PCB ASSY KBD ADM-36 | 136053-003 |
| 2 | | ✓ | N | 132773-004 | PCB ASSY KBD ADM-36 WONGS | 136053-003 |
| 3 | | | | | | |
| 4 | | ✓ ✓ | A | 136053-003 | ASSY KBD ADM36 PCBA | |
| 5 | | | | | (PART OF ASSY 132766) | |
| 6 | | | | | | |
| 7 | | 0 | 1 | | 132776-003 | KEY SET ADM36 |
| 8 | | 1 | 0 | | 132776-004 | KEY SET ADM36 WONGS |
| 9 | | | | | | |
| 10 | | 2 | 2 | | 805046 | CAP 0.1UF 50V MONOLITH DIP |
| 11 | | 1 | 1 | | 128518-475 | CAP 4.7UF 10V |
| 12 | | 2 | 2 | | 805056 | CAP 15 UF 20V TANT |
| 13 | | 1 | 1 | | 128518-225 | CAP 2.2UF TANT |
| 14 | | 2 | 2 | | 128518-100 | CAP 10 PF MICA |
| 15 | | 1 | 1 | | 808078 | DIODE IN4148 |
| 16 | | 6 | 6 | | 808086 | LED 10 MA |
| 17 | | 1 | 1 | | 819079 | BUZZER AUDIO 3K HZ |
| 18 | | 1 | 1 | | 809292 | CONN. 4 PIN 616 TEL HD |
| 19 | | 1 | 1 | X | 128533-151 | RES CF 150 5% 1/4W |
| 20 | | 2 | 2 | | 819073 | RES NTWK 4.7K DIP |
| 21 | | 1 | 1 | | 819066 | RES NTWK 390 DIP |
| 22 | | 2 | 2 | | 803081 | RES 0.1 OHM 10% 2W |
| 23 | | 2 | 2 | X | 128533-101 | RES CF 100 5% 1/4 W |
| 24 | | 1 | 1 | | 128348-06 | IC 7406 |
| 25 | | 1 | 1 | | 128348-7805 | IC 7805 |

CUSTOMER SERVICE DEPT. | SIZE A | FSCM NO. 98438 | KBD PCB ADM36 | SH 2 | REV

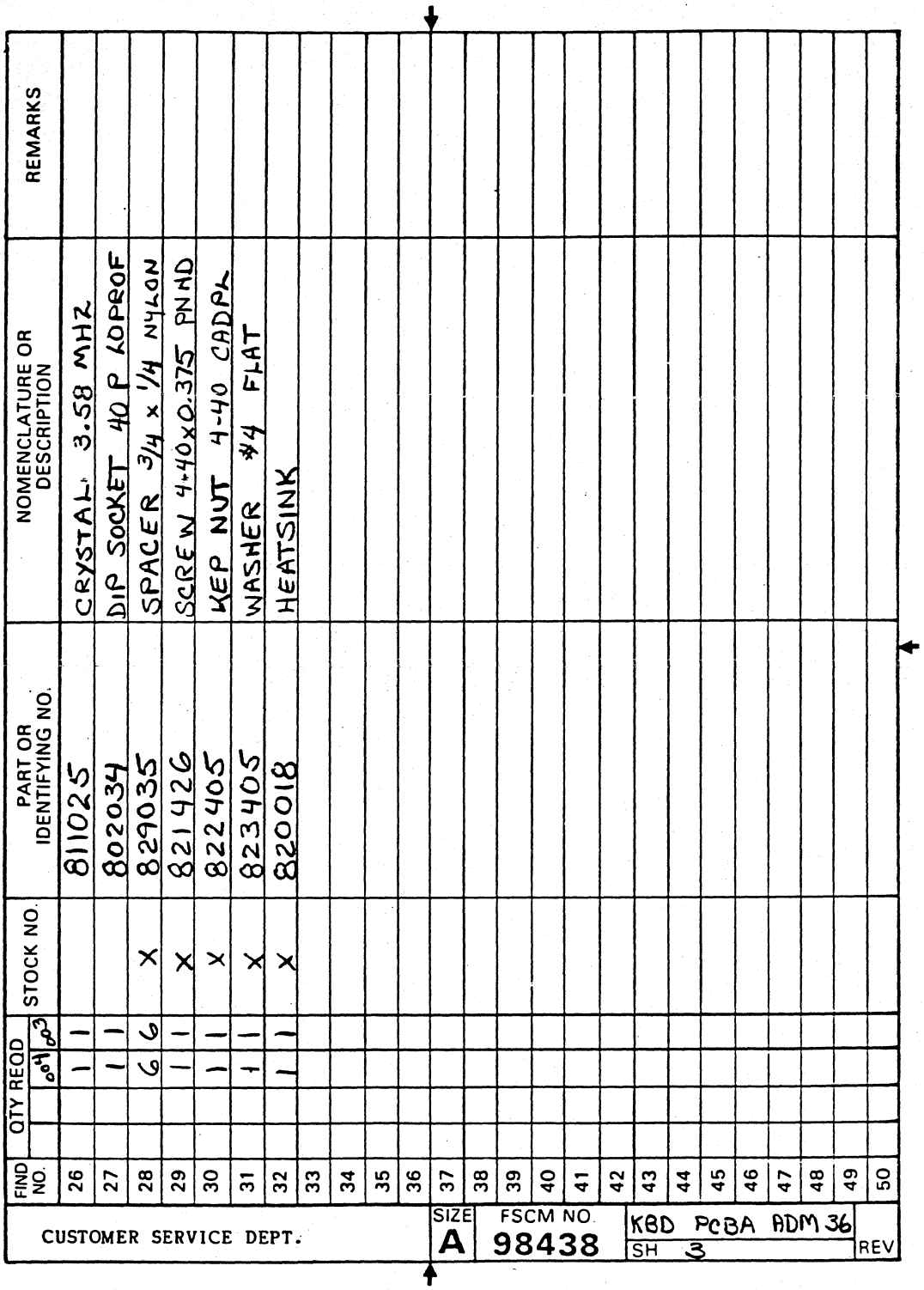

| FIND NO. | QTY REQD | | | STOCK NO. | PART OR IDENTIFYING NO. | NOMENCLATURE OR DESCRIPTION | REMARKS |
|---|---|---|---|---|---|---|---|
| | | 001 | 003 | | | | |
| 26 | | 1 | 1 | | 811025 | CRYSTAL, 3.58 MHZ | |
| 27 | | 1 | 1 | | 802034 | DIP SOCKET 40 P LOPROF | |
| 28 | | 6 | 6 | X | 829035 | SPACER 3/4 x 1/4 NYLON | |
| 29 | | 1 | 1 | X | 821426 | SCREW 4-40x0.375 PNHD | |
| 30 | | 1 | 1 | X | 822405 | KEP NUT 4-40 CADPL | |
| 31 | | 1 | 1 | X | 823405 | WASHER #4 FLAT | |
| 32 | | 1 | 1 | X | 820018 | HEATSINK | |
| 33 | | | | | | | |
| 34 | | | | | | | |
| 35 | | | | | | | |
| 36 | | | | | | | |
| 37 | | | | | | | |
| 38 | | | | | | | |
| 39 | | | | | | | |
| 40 | | | | | | | |
| 41 | | | | | | | |
| 42 | | | | | | | |
| 43 | | | | | | | |
| 44 | | | | | | | |
| 45 | | | | | | | |
| 46 | | | | | | | |
| 47 | | | | | | | |
| 48 | | | | | | | |
| 49 | | | | | | | |
| 50 | | | | | | | |

CUSTOMER SERVICE DEPT. | SIZE A | FSCM NO. 98438 | KBD PCBA ADM 36 | SH 3 | REV

| REVISIONS | | | | |
|---|---|---|---|---|
| LTR | SHEET | DESCRIPTION | DATE | APPROVED |
| | | | | |

| DASH NO. | NEXT ASSY | USED ON |
|---|---|---|
| | | |
| | | |
| | | |

APPLICATION

| | | |
|---|---|---|
| UNLESS OTHERWISE SPECIFIED DIM. IN INCHES TOLERANCES X ± .1 XX ± .03 XXX ± .010 ANGLES ± 0.5° MACH. FIN. √ | DR | LEAR SIEGLER, INC. DATA PRODUCTS DIV. CUSTOMER SERVICE DEPARTMENT |
| | CHK | |
| | DSGN | COVER ASSY |
| | ENGR | ADM 36 (MONITORS) |
| | PROJ | |
| | REL | SIZE A \| CODE IDENT 98438 \| REF 132843 \| REV |
| | CUSTOMER APPD | SCALE \| SHEET 1 OF 3 |

CUSTOMER SERVICE DEPT.

| SIZE | FSCM NO. | SH | REV |
|---|---|---|---|
| A | 98438 | 2 | |

ADM36 COVER

| FIND NO. | QTY REQD 15" | 14" | 12" | STOCK NO. | PART OR IDENTIFYING NO. | NOMENCLATURE OR DESCRIPTION | REMARKS |
|---|---|---|---|---|---|---|---|
| 1 | | | ✓ | | 12" | COVER ASSY (12" MONITOR) | |
| 2 | | ✓ | | | 14" | COVER ASSY (14" MONITOR) | |
| 3 | ✓ | | | | 15" | COVER ASSY (15" MONITOR) | |
| 4 | | | | | | | |
| 5 | | | | | | | |
| 6 | 0 | 0 | 1 | A | 132509-003 | MONITOR ASSY 12" WHITE, SAMSUNG | |
| 7 | 0 | 0 | 1 | A | 132509-004 | MONITOR ASSY 12" GREEN, SAMSUNG | |
| 8 | 0 | 0 | 1 | A | 132509-005 | MONITOR ASSY 12" AMBER, SAMSUNG | |
| 9 | | | | | | | |
| 10 | 0 | 1 | 0 | A | 136169-001 | MONITOR ASSY 14" WHITE, SAMSUNG | |
| 11 | 0 | 1 | 0 | A | 136169-002 | MONITOR ASSY 14" GREEN, SAMSUNG | |
| 12 | 0 | 1 | 0 | A | 136169-003 | MONITOR ASSY 14" AMBER, SAMSUNG | |
| 13 | | | | | | | |
| 14 | 1 | 0 | 0 | A | 136069-001 | MONITOR ASSY 15" WHITE, 27V MOTOROLA | |
| 15 | 1 | 0 | 0 | A | 136069-002 | MONITOR ASSY 15" GREEN, 27V MOTOROLA | |
| 16 | 1 | 0 | 0 | A | 136069-003 | MONITOR ASSY 15" AMBER, 27V MOTOROLA | |
| 17 | | | | | | | |
| 18 | 0 | 1 | 1 | | 131751-001 | COVER, ADM-36 | |
| 19 | 1 | 0 | 0 | | 131751-002 | COVER, ADM-36 | |
| 20 | 0 | 0 | 1 | | 131755-001 | HOUSING, BEZEL 12" | |
| 21 | 0 | 1 | 0 | | 136174-001 | HOUSING, BEZEL 14" | |
| 22 | 1 | 0 | 0 | | 131756-002 | HOUSING, BEZEL 15" | |
| 23 | | | | | | | |
| 24 | 0 | 1 | 1 | | 136009-002 | MONITOR CABLE | |
| 25 | 1 | 0 | 0 | | 129897-004 | MONITOR CABLE | |

CUSTOMER SERVICE DEPT.

SIZE A | FSCM NO. 98438 | ADM 36 Cover | SH 3 | REV

| FIND NO. | QTY REQD | | | STOCK NO. | PART OR IDENTIFYING NO. | NOMENCLATURE OR DESCRIPTION | REMARKS |
|---|---|---|---|---|---|---|---|
| | 15" | 14" | 12" | | | | |
| 26 | 0 | 1 | 1 | | 823007 | WASHER #10 EX LOCK | |
| 27 | 1 | 1 | 1 | | 830016 | CABLE CLAMP | |
| 28 | 10 | 6 | 6 | | 821027 | SCREW 10-32 x 1/2 FL HX HD | |
| 29 | 0 | 1 | 1 | | 823003 | WASHER #10 FL | |
| 30 | 1 | 1 | 1 | | 128214 | LABEL WARNING | |
| 31 | 4 | 0 | 0 | | 821815 | SCREW 8-18 x 3/8 TYPE B HEX WSHR HD | |
| 32 | 1 | 0 | 0 | | 132818-001 | MOUNTING BRACKET (LEFT) | |
| 33 | 1 | 0 | 0 | | 132818-002 | MOUNTING BRACKET (RIGHT) | |
| 34 | 0 | 1 | 1 | | 132231-001 | MOUNTING BRACKET (MCB) | |
| 35 | | | | | | | |
| 36 | 0 | 0 | 1 | | 132777-005 | LOGO PLATE 12" ADM36 | |
| 37 | 0 | 1 | 0 | | | LOGO PLATE 14" ADM36 | |
| 38 | 1 | 0 | 0 | | 132777-006 | LOGO PLATE 15" ADM36 | |
| 39 | | | | | | | |
| 40 | | | | | | | |
| 41 | | | | | | | |
| 42 | | | | | | | |
| 43 | | | | | | | |
| 44 | | | | | | | |
| 45 | | | | | | | |
| 46 | | | | | | | |
| 47 | | | | | | | |
| 48 | | | | | | | |
| 49 | | | | | | | |
| 50 | | | | | | | |

| PART NUMBER | DESCRIPTION 12" | QTY | LOCATION |
|---|---|---|---|
| 916030 | Monitor control board assy SAMSUNG. (when ordering this board, please note if board is for the ADM32 or not, The MCB for the 32 must have an extra long cable to monitor installed.) | 1 | see breakdown |
| 919020 | TUBE, std crt Samsung | 1 | |
| 919018 | TUBE, Green crt, Samsung | | |
| 919019 | YOKE Assy, Samsung | 1 | |
| 902525 | Magnet, ring type (for yoke) | A/R | |

THE ABOVE PARTS ARE FOR THE SAMSUNG MONITOR ASSY ONLY!

| | | |
|---|---|---|
| 132509-003 | Monitor Assy, white (std) Samsung 12" | |
| 132509-004 | Monitor Assy, Green Samsung 12" | |

MONITOR ASSY 12"
132509
SHEET 1 OF 3

ASSY 916030 MONITOR CONTROL BOARD ASSY, SAMSUNG

| PART NUMBER | DESCRIPTION | QTY | LOCATION |
|---|---|---|---|
| 905355 | Cap 100uf 25V Electro | 2 | C103,412 |
| 905045 | Cap 680pf 50V Ceramic | 1 | C201 |
| 905435 | Cap 0.001uf 50V mylar | 1 | C301 |
| 905434 | Cap 0.15uf 100V mylar | 1 | C302 |
| 805022 | Cap 0.1uf 100V mylar | 4 | C304,305, 306,309 |
| 905046 | Cap 22pf 50V Ceramic | 1 | C306 |
| 905308 | Cap 1000uf 16V Electro | 2 | C307,411 |
| 905365 | Cap 47uf 16V Electro | 2 | C308,408 |
| 905436 | Cap 0.01uf 100V Mylar | 1 | C407 |
| 905716 | Cap 0.01uf 400V Poly | 1 | C409 |
| 905717 | Cap 0.022uf 400V poly | 1 | C410 |
| 905366 | Cap 16uf 63V bi-polar | 1 | C413 |
| 905718 | Cap 0.047uf 630V poly | 1 | C501 |
| 905367 | Cap 220uf 50V Electro | 1 | C502 |
| 905437 | Cap 0.01uf 200V mylar | 1 | C503 |
| 905368 | Cap 3.3uf 50V electro | 1 | C504 |
| 905719 | Cap 0.01uf 630V poly | 1 | C505 |
| 908033 | Diode IN60FM Germanium | 1 | CR301 |
| 908525 | Diode U06E Silicon | 2 | CR402,403 |
| 808022 | Diode IN4007 Silicon | 1 | CR501 |
| 908034 | Diode IN4003 Silicon | 1 | CR502 |
| 908011 | Diode IN4004 Silicon | 1 | CR503 |
| 917039 | Coil, Horiz width HW-160 | 1 | L402 |
| 917040 | Coil, Horiz Linearity DL-284 | 1 | L403 |
| 910030 | Trans 2N2219 | 1 | Q201 |
| 910530 | Trans KCS1008 | 1 | Q403 |
| 910510 | Trans BU407 | 1 | Q404 |
| 913025 | IC TDA1170 | 1 | U301 |
| 916029 | Flyback Transf. output TMF-110 | 1 | T402 |

ASSY 916030 cont. MONITOR CONTROL BOARD ASSY, SAMSUNG

| PART NUMBER | | DESCRIPTION | QTY | LOCATION |
|---|---|---|---|---|
| 128533-330 | FS | Res 33 ohm 5% $\frac{1}{4}$w | 1 | R201 |
| 128533-470 | FS | Res 47 ohm 5% $\frac{1}{4}$w | 1 | R203 |
| 903719 | | Res 680 ohm 5% $\frac{1}{4}$w | 1 | R204 |
| 128533-104 | FS | Res 100K ohm 5% $\frac{1}{4}$w | 2 | R308, 205 |
| 128533-101 | FS | Res 100 ohm 5% $\frac{1}{4}$w | 5 | R206, 408, 410, 501, 503 |
| 128533-154 | FS | Res 150K ohm 5% $\frac{1}{4}$w | 2 | R301, 303 |
| 901036 | | Res 100K ohm 20% 1w VAR | 2 | R302, 304 |
| 903050 | | Res 330K ohm 5% $\frac{1}{4}$w carb straight | 1 | R305 |
| 901037 | | Res 200K ohm 20% 1w VAR | 1 | R306 |
| 128533-393 | FS | Res 39K ohm 5% $\frac{1}{4}$w | 1 | R307 |
| 903044 | | Res 3.3 ohm 5% $\frac{1}{4}$w | 1 | R309 |
| 903033 | | Res 56K ohm 5% $\frac{1}{4}$w | 2 | R310, 311 |
| 903051 | | Res 470K ohm 5% $\frac{1}{4}$w carb straight | 1 | R312 |
| 128533-683 | FS | Res 68K ohm 5% $\frac{1}{4}$w | 1 | R313 |
| 903052 | | Res 2.2 ohm 5% $\frac{1}{4}$w | 1 | R314 |
| 903053 | | Res 1 ohm 5% $\frac{1}{4}$w | 1 | R411 |
| 903559 | | Res 82 ohm 5% $\frac{1}{2}$w | 1 | R412 |
| 903613 | | Res 0.5 ohm 5% 1w metal oxide | 1 | R413 |
| 128533-333 | FS | Res 33K ohm 5% $\frac{1}{4}$w | 1 | R502 |
| 901038 | | Res 5M ohm 20% 5w VAR | 1 | R508 |
| 128533-224 | FS | Res 220K ohm 5% $\frac{1}{4}$w | 1 | R509 |
| 901035 | | Res 100K ohm 20% 2w VAR | 1 | R510 |
| 128533-473 | FS | Res 47K ohm 5% $\frac{1}{4}$w | 1 | R511 |
| 129472-390 | | Res 39 ohm 5% 1w metal oxide | 1 | R504 |
| 128533-472 | FS | Res 4.7K ohm 5% $\frac{1}{4}$w | 2 | R505, 507 |
| 128533-102 | FS | Res 1K ohm 5% $\frac{1}{4}$w | 1 | R506 |

14" MONITOR ASSEMBLY PARTS LIST
NOT AVAILABLE AT THIS TIME.

MONITOR CONTROL BOARD PARTS LIST
NOT AVAILABLE AT THIS TIME.

ADM 36 MONITOR ASSY 15" MOTOROLA

| | |
|---|---|
| 136069-001 | MONITOR ASSY 15", MOTOROLA 27V WHITE SCREEN |
| 136069-002 | MONITOR ASSY 15", MOTOROLA 27V GREEN SCREEN |
| 136069-003 | MONITOR ASSY 15", MOTOROLA 27V AMBER SCREEN |

| | |
|---|---|
| 919002 | CRT, TUBE STD WHITE 15" (MOTOROLA) |
| 919006 | CRT, TUBE GREEN 15" (MOTOROLA) |
| NPN | CRT, TUBE AMBER 15" (MOTOROLA) |
| 919005 | YOKE ASSY, ADM 42,32,36 15"only, MOTOROLA |
| 916032 | MONITOR CONTROL BOARD, MON.BASE ASSY 27V ADM-36 (see break down next page) |

MONITOR ASSY 15"
136069
SHEET 1 OF 6

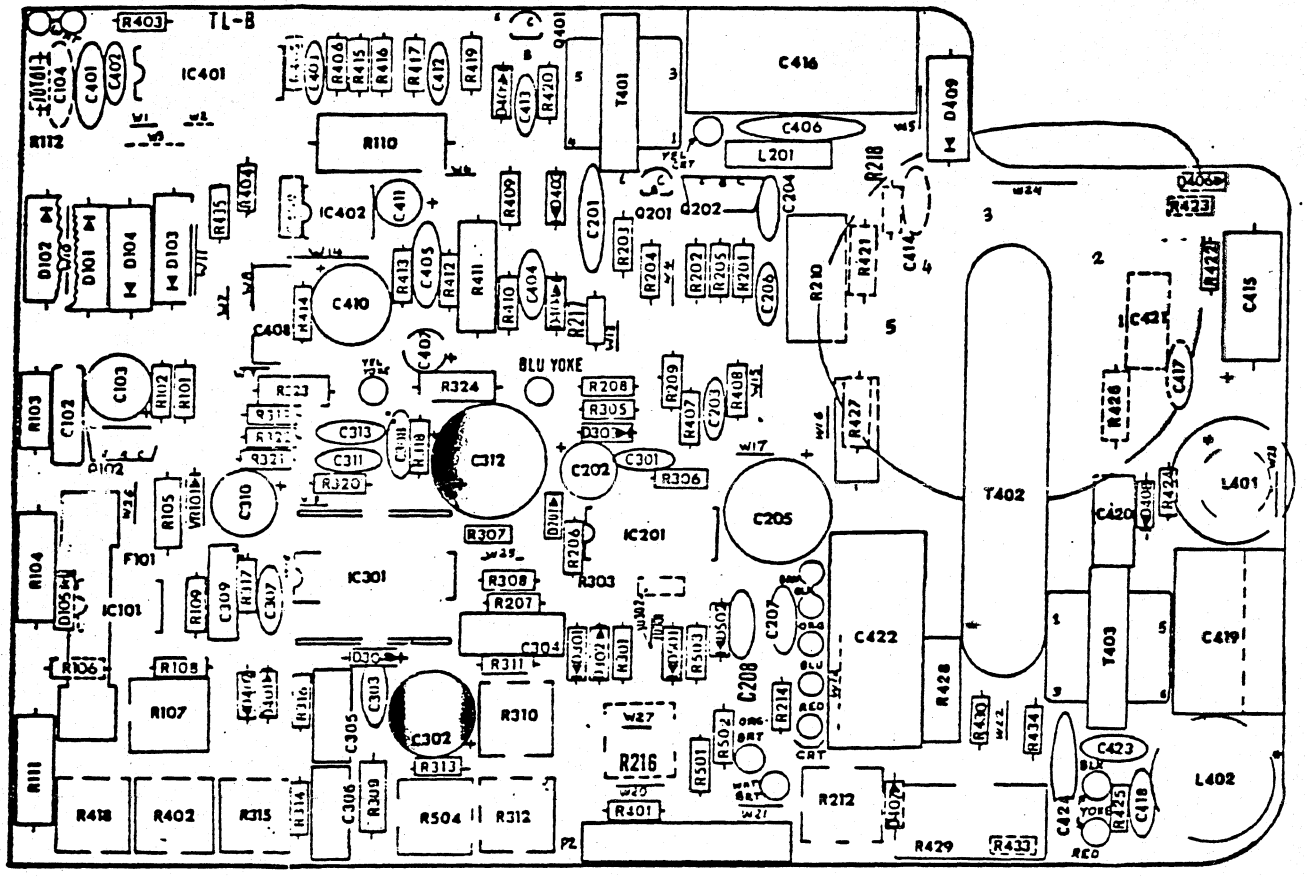


MONITOR BASE PLATE ASSY, MOTOROLA

ADM- 36

916032 Monitor base plate Assy,Motorola

| PART NUMBER | DESCRIPTION | LOCATION | QTY |
|---|---|---|---|
| 905356 | Cap. 4500 50V Lytic | C101 | 1 |
| 910525 | Transistor 7675 24V Reg | Q101 | 1 |
| 916033 | Flyback Assy, H.F.XFMR | T402 | 1 |
| 905707 | Cap .22 10% 50V Poly | C102 | 1 |
| 905304 | Cap 100 mfd 10V Lytic | C103 | 1 |
| 905037 | Cap 120 pfd 5% 100V cer | C201,401 | 2 |
| 905357 | Cap 22 mfd 35V Lytic | C202,310 | 2 |
| 905038 | Cap 0.1 mfd 80-20% 100V cer | C203,301, 303,311; 402,424. | 6 |

ADM-36

Monitor base plate assy, MOTOROLA. con't.

| | PART NUMBER | DESCRIPTION | LOCATION | QTY |
|---|---|---|---|---|
| | 905016 | Cap .01 mfd 80-20% 100V cer | C204,206, 414 | 3 |
| | 905358 | Cap 68 mfd 100V Lytic | C205 | 1 |
| | 905359 | Cap 100 mfd 50V Lytic | C302 | 1 |
| | 905039 | Cap .005 mfd 20% 500V Cer | C207,423 | 2 |
| | 905704 | Cap 0.15 mfd 10% 100V poly | C304 | 1 |
| | 905708 | Cap 0.1 mfd 10% 100V poly | C305,306 | 2 |
| | 905002 | Cap 33 pfd 10% 500V Cer | C308 | 1 |
| | 905360 | Cap 1500 mfd 25V Lytic | C312 | 1 |
| | 905040 | Cap .001 mfd 10% 500V Cer | C314,403, 404,417 | 4 |
| * | 905048 | Cap .0039 mfd 20% 100V Cer | C405 | 1 |
| | 905007 | Cap .01 mfd 20% 1KV Cer | C406 | 1 |
| | 905316 | Cap 1.0 mfd 50V Lytic | C407 | 1 |
| | 905709 | Cap .033 mfd 10% 200V poly | C408 | 1 |
| | 905042 | Cap 2200 pfd 2% 100V Cer | C409 | 1 |
| | 905361 | Cap 100 mfd 16V Lytic | C410 | 1 |
| | 905362 | Cap 4.7 mfd 35V Lytic | C411 | 1 |
| | 905018 | Cap .01 mfd 80-20% 50V Cer | C412 | 1 |
| | 905043 | Cap .0022 mfd 10% 50V Cer | C413 | 1 |
| | 905363 | Cap 220 mfd 10V Lytic | C415 | 1 |
| | 905710 | Cap .0091 mfd 5% 1200V poly carb | C416 | 1 |
| * | 905049 | Cap 330 pfd 10% 500V Cer | C418 | 1 |
| | 905711 | Cap 1.0 mfd 10% 200V poly | C419 | 1 |
| | 905712 | Cap .0033 mfd 10% 200V poly | C420 | 1 |
| | 905713 | Cap .001 mfd 10% 600V poly | C421 | 1 |
| | 905714 | Cap 0.47 mfd 10% 600V poly | C422 | 1 |
| | 908027 | Diode 2054 Gen.Purpose | D105,201, 301,302,303,401, 402,403,404,405, 501,502. | 12 |
| | 908028 | Diode 91A02 Rectifier,Silicon | D304 | 1 |
| | 908029 | Diode 4921 Damper 800V | D406 | 1 |
| | 908030 | Diode D1K Silicon | D407 | 1 |
| | 908031 | Diode 75B02 Fast Recovery 200V | D408 | 1 |
| | 908032 | Diode 73B06 Fast Recovery 600V | D409 | 1 |
| | 808006 | Diode 1N5231B Zener | VR101 | 1 |
| | 913024 | IC Opt Ampl T3F | IC101 | 1 |
| | 840015 | Fuse 2.5A 3AG | F101 | 1 |
| | 128348-6 | IC 7406 6-Inverter | IC201 | 1 |

ADM- 36

Monitor base plate assy, MOTOROLA. con't.

| PART NUMBER | DESCRIPTION | LOCATION | QTY |
|---|---|---|---|
| 913025 | IC TDA1170S Vert Processor | IC301 | 1 |
| 129467-123 | IC 74LS123 Dual Retrig | IC401 | 1 |
| 128348-555 | IC NE555V Timing | IC402 | 1 |
| 917036 | Coil 4.7 uh (Peaking) | L201 | 1 |
| 917037 | Coil Horiz. Size | L401 | 1 |
| 917038 | Coil Horiz.Linearity | L402 | 1 |
| 910526 | Trans. 3026 Reg Driver | Q102,202 | 2 |
| 910527 | Trans. A2J Video Driver | Q201 | 1 |
| 910528 | Trans. 3007 Horiz. Driver | Q401 | 1 |
| 910529 | Trans. 7696 Horiz. Output | Q402 | 1 |
| 903605 | Res 220 ohm 5% 1W | R104 | 1 |
| 901027 | Res 10K ohm +24V Adj Var. | R107 | 1 |
| 903718 | Res 100 ohm 5% 2W (Standup) | R110 | 1 |
| 903609 | Res 82 ohm 5% 1W | R111 | 1 |
| 903850 | Res 1.2K ohm 10% 5W | R210 | 1 |
| 901028 | Res 250K ohm Var. Control | R212 | 1 |
| 903045 | Res 270K ohm 1/4W | R214 | 1 |
| 901030 | Res 100K ohm Var. (Vert hold) | R310,315 | 2 |
| 901031 | Res 100K ohm Var. (Vert Size) | R312 | 1 |
| 903037 | Res 121K ohm 1% 1/8W | R313 | 1 |
| 903039 | Res 274K ohm 1% 1/8W | R314 | 1 |
| 903567 | Res 1.0 ohm 10% 1/2W | R323 | 1 |
| 903611 | Res 3.9 ohm 5% 1W | R326 | 1 |
| 901032 | Res 200K ohm Var. (Horiz.Delay) | R402 | 1 |
| 903600 | Res 68K ohm 10% 1W | R411 | 1 |
| 903041 | Res 18.2K ohm 1% 1/8W | R416 | 1 |
| 901033 | Res 20K ohm Var. (Horiz.Hold) | R418 | 1 |
| 903559 | Res 82 ohm 1% 1/2W | R421 | 1 |
| 903573 | Res 1.8 ohm 10% 1/2W | R426 | 1 |
| 903567 | Res 1.0 ohm 5% 1/2W | R427 | 1 |
| 903612 | Res 330K ohm 10% 1W | R428 | 1 |
| 901034 | Res 2M Var (Focus) | R429 | 1 |
| 916984 | Transformer, Horiz.Driver | T401 | 1 |
| 128533-301 | Res 300 ohm 5% 1/4W | R101 | 1 |
| 128533-101 | Res 100 ohm 5% 1/4W | R102,407 | 2 |
| 128538-302 | Res 3K ohm 5% 1/2W | R103,109 | 2 |
| 903548 | Res 1.8K ohm 5% 1/2W | R105 | 1 |
| 128533-123 | Res 12K ohm 5% 1/4W | R106 | 1 |

ADM- 36

Monitor base plate assy, MOTOROLA. con't.

| PART NUMBER | DESCRIPTION | LOCATION | QTY |
|---|---|---|---|
| 128533-122 | Res 1.2K ohm 1/4W 5% | R108 | 1 |
| 128533-470 | Res 47 ohm 5% 1/4W | R202,203 209,301, 401,423. | 6 |
| 128533-560 | Res 56 ohm 5% 1/4W | R204 | 1 |
| 903033 | Res 56K ohm 5% 1/4W | R205 | 1 |
| 128533-391 | Res 390 ohm 5% 1/4W | R206,217, | 2 |
| 903043 | Res 5.6K ohm 5% 1/4W | R207,306 | 2 |
| 903044 | Res 3.3 ohm 5% 1/4W | R208,321 405. | 3 |
| 903502 | Res 470 ohm 5% 1/2W | R211,215 | 2 |
| 128533-223 | Res 22K ohm 5% 1/4W | R218 | 1 |
| 128533-104 | Res 100K ohm 5% 1/4W | R219,409 410,430 | 4 |
| 128533-332 | Res 3.3K ohm 5% 1/4W | R305,408, 413. | 3 |
| 128533-222 | Res 2.2K ohm 5% 1/4W | R307 | 1 |
| 128533-183 | Res 18K ohm 5% 1/4W | R308 | 1 |
| 128533-154 | Res 150K ohm 5% 1/4W | R311 | 1 |
| 128533-433 | Res 43K ohm 5% 1/4W | R316 | 1 |
| 128533-823 | Res 82K ohm 5% 1/4W | R317 | 1 |
| 128533-224 | Res 220K ohm 5% 1/4W | R318 | 1 |
| 128533-822 | Res 8.2K ohm 5% 1/4W | R319 | 1 |
| 128533-333 | Res 33K ohm 5% 1/4W | R320 | 1 |
| 128533-103 | Res 10K ohm 5% 1/4W | R322,406 | 2 |
| 129471-152 | Res 1.5K ohm 5% 1/2W | R324,420 | 2 |
| 128533-472 | Res 4.7K ohm 5% 1/4W | R403 | 1 |
| 128533-102 | Res 1K ohm 5% 1/4W | R404,415 | 2 |
| 128533-273 | Res 27K ohm 5% 1/4W | R412 | 1 |
| 128533-393 | Res 39K ohm 5% 1/4W | R414 | 1 |
| 128533-473 | Res 47K ohm 5% 1/4W | R417 | 1 |
| 128533-271 | Res 270 ohm 5% 1/4W | R419 ,R425 | 2 |

ADM-36

Monitor base plate assy, MOTOROLA. con't

| PART NUMBER | DESCRIPTION | LOCATION | QTY |
|---|---|---|---|
| 903038 | Res 2.7 ohm 5% 1/4W | R422 | 1 |
| 128533-102 | Res 1K ohm 5% 1/4W | R424 | 1 |
| 903572 | Res 56K ohm 10% 1/2W | R431,432 | 2 |
| 128533-102 | Res 1K ohm 5% 1/4W | R435 | 1 |
| 128533-561 | Res 560 ohm 5% 1/4W | R502 | 1 |

| REVISIONS | | | | |
|---|---|---|---|---|
| LTR | SHEET | DESCRIPTION | DATE | APPROVED |
| | | | 12-1-83 | T. MANEY |

WITH DCN'S 2505, 2969, 2992, 3314, 3566, 3918,

REFERANCE LIST ONLY

STOCK CODE

X = NON-STOCK PART, (FLOOR STK)
A = ASSY, HAS BREAK DOWN LISTED
N = NOT CARRIED AS ASSY

| DASH NO. | NEXT ASSY | USED ON |
|---|---|---|
| | | |
| | | |

APPLICATION

| | | | |
|---|---|---|---|
| UNLESS OTHERWISE SPECIFIED DIM. IN INCHES TOLERANCES .X ± .1 .XX ± .03 .XXX ± .010 ANGLES ± 0.5° MACH. FIN. √ | DR | LEAR SIEGLER, INC. DATA PRODUCTS DIV. CUSTOMER SERVICE DEPARTMENT | |
| | CHK | | |
| | DSGN | BASE ASSY | |
| | ENGR | ADM 36 | |
| | PROJ | | |
| | REL | SIZE A / CODE IDENT 98438 / REF-132804 | REV REF |
| | CUSTOMER APPD | SCALE | SHEET 1 OF 5 |

CUSTOMER SERVICE DEPT.

SIZE A | FSCM NO. 98438 | ADM 36 BASE | SH 2 | REF | REV

| FIND NO. | QTY REQD .004 | .003 | .002 | .001 | STOCK NO. | PART OR IDENTIFYING NO. | NOMENCLATURE OR DESCRIPTION | REMARKS |
|---|---|---|---|---|---|---|---|---|
| 1 | | | | ✓ | N | 132804-001 | BASE ASSY 115V (12"MON) | 15V PWR SUPPLY |
| 2 | | | ✓ | | N | 132804-002 | " " 230V (12"MON) | 15V PWR SUPPLY |
| 3 | | ✓ | | | N | 132804-003 | " " 115V (15"MON.) | 27V POWER SUPPLY |
| 4 | ✓ | | | | N | 132804-004 | " " 230V (15"MON) | 27V POWER SUPPLY |
| 5 | | | | | | | | |
| 6 | | | | | | | | |
| 7 | 1 | 1 | 1 | 1 | | 131754-001 | HOUSING, BASE | |
| 8 | | | | | | | | |
| 9 | 0 | 0 | 0 | 1 | A | 129881-5 | POWER SUPPLY 115V, 15V | |
| 10 | 0 | 0 | 1 | 0 | A | 129881-6 | POWER SUPPLY 230V, 15V | |
| 11 | 0 | 1 | 0 | 0 | A | 132670-001 | POWER SUPPLY 115V, 27V | |
| 12 | 1 | 0 | 0 | 0 | A | 132670-002 | POWER SUPPLY 230V, 27V | |
| 13 | 0 | 0 | 1 | 1 | | 131783-001 | RETAINER, POWER SUPPLY | |
| 14 | 0 | 0 | 1 | 1 | | 132835-001 | COVER, POWER SUPPLY | |
| 15 | 0 | 1 | 0 | 1 | | 129455-3 | POWER CORD 115V | |
| 16 | 1 | 0 | 1 | 0 | | 129455-5 | POWER CORD 230V | |
| 17 | | | | | | | | |
| 18 | 0 | 0 | 0 | 1 | | 132736-001 | CABLE, POWER SUPPLY 115 | |
| 19 | 0 | 0 | 1 | 0 | | 132736-002 | CABLE, POWER SUPPLY 230 | |
| 20 | | | | | | | | |
| 21 | | | | | | | | |
| 22 | 0 | 1 | 0 | 0 | | 132816-001 | WIRING ASSY | |
| 23 | 1 | 0 | 0 | 0 | | 132816-002 | WIRING ASSY | |
| 24 | 1 | 1 | 0 | 0 | | 132829-003 | WIRE ASSY | |
| 25 | 1 | 1 | 1 | 1 | | 830016 | CABLE CLAMP | |

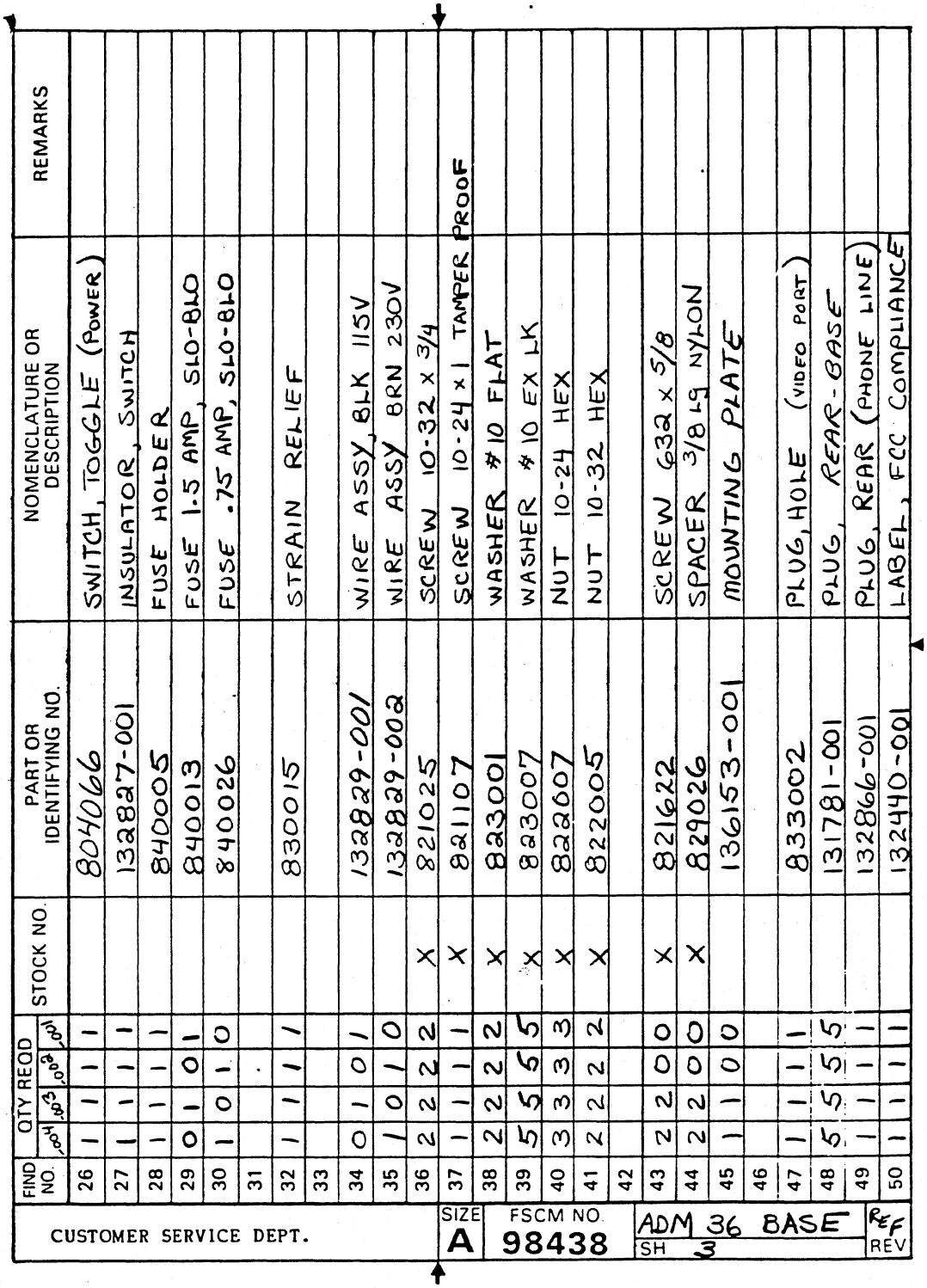

| FIND NO. | QTY REQD .001 | .01 | .03 | .04 | STOCK NO. | PART OR IDENTIFYING NO. | NOMENCLATURE OR DESCRIPTION | REMARKS |
|---|---|---|---|---|---|---|---|---|
| 26 | 1 | 1 | 1 | 1 | | 804066 | SWITCH, TOGGLE (POWER) | |
| 27 | 1 | 1 | 1 | 1 | | 132827-001 | INSULATOR, SWITCH | |
| 28 | 1 | 1 | 1 | 1 | | 840005 | FUSE HOLDER | |
| 29 | 0 | 1 | 0 | 1 | | 840013 | FUSE 1.5 AMP, SLO-BLO | |
| 30 | 1 | 0 | 1 | 0 | | 840026 | FUSE .75 AMP, SLO-BLO | |
| 31 | | | | | | | | |
| 32 | 1 | 1 | 1 | 1 | | 830015 | STRAIN RELIEF | |
| 33 | | | | | | | | |
| 34 | 0 | 1 | 0 | 1 | | 132829-001 | WIRE ASSY, BLK 115V | |
| 35 | 1 | 0 | 1 | 0 | | 132829-002 | WIRE ASSY BRN 230V | |
| 36 | 2 | 2 | 2 | 2 | X | 821025 | SCREW 10-32 x 3/4 | |
| 37 | 1 | 1 | 1 | 1 | X | 821107 | SCREW 10-24 x 1 TAMPER PROOF | |
| 38 | 2 | 2 | 2 | 2 | X | 823001 | WASHER #10 FLAT | |
| 39 | 5 | 5 | 5 | 5 | X | 823007 | WASHER #10 EX LK | |
| 40 | 3 | 3 | 3 | 3 | X | 822607 | NUT 10-24 HEX | |
| 41 | 2 | 2 | 2 | 2 | X | 822005 | NUT 10-32 HEX | |
| 42 | | | | | | | | |
| 43 | 2 | 2 | 0 | 0 | X | 821622 | SCREW 632 x 5/8 | |
| 44 | 2 | 2 | 0 | 0 | X | 829026 | SPACER 3/8 LG NYLON | |
| 45 | 1 | 1 | 0 | 0 | | 136153-001 | MOUNTING PLATE | |
| 46 | | | | | | | | |
| 47 | 1 | 1 | 1 | 1 | | 833002 | PLUG, HOLE (VIDEO PORT) | |
| 48 | 5 | 5 | 5 | 5 | | 131781-001 | PLUG, REAR-BASE | |
| 49 | 1 | 1 | 1 | 1 | | 132866-001 | PLUG, REAR (PHONE LINE) | |
| 50 | 1 | 1 | 1 | 1 | | 132440-001 | LABEL, FCC COMPLIANCE | |

CUSTOMER SERVICE DEPT. | SIZE A | FSCM NO. 98438 | ADM 36 BASE | SH 3 | REF REV

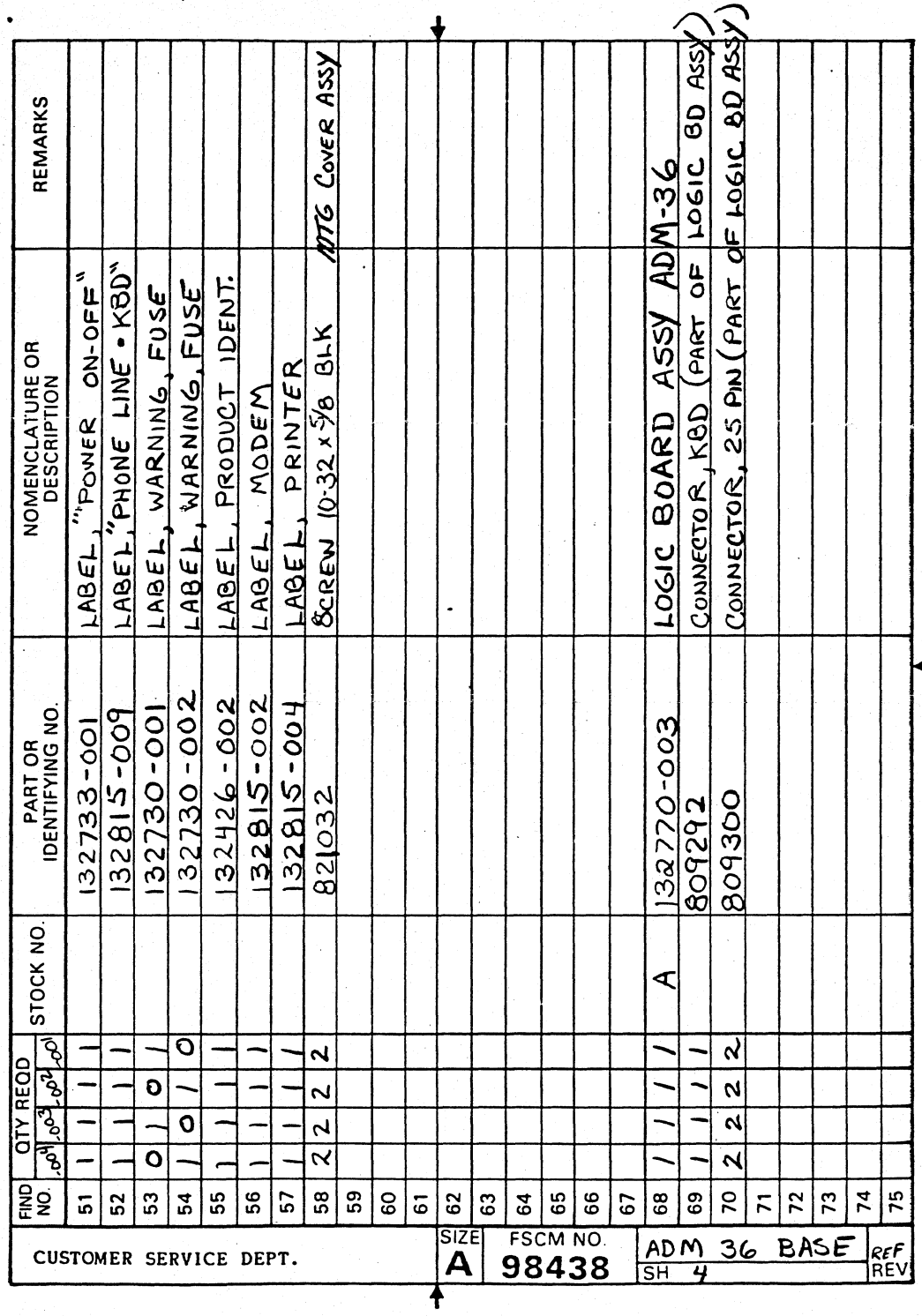

| FIND NO. | QTY REQD .001 | .002 | .003 | .004 | .001 | STOCK NO. | PART OR IDENTIFYING NO. | NOMENCLATURE OR DESCRIPTION | REMARKS |
|---|---|---|---|---|---|---|---|---|---|
| 51 | 1 | 1 | 1 | 1 | 1 | | 132733-001 | LABEL, "POWER ON-OFF" | |
| 52 | 1 | 1 | 1 | 1 | 1 | | 132815-009 | LABEL, "PHONE LINE • KBD" | |
| 53 | 0 | 1 | 0 | 1 | | | 132730-001 | LABEL, WARNING, FUSE | |
| 54 | 1 | 0 | 1 | 0 | | | 132730-002 | LABEL, WARNING, FUSE | |
| 55 | 1 | 1 | 1 | 1 | | | 132426-602 | LABEL, PRODUCT IDENT. | |
| 56 | 1 | 1 | 1 | 1 | | | 132815-002 | LABEL, MODEM | |
| 57 | 1 | 1 | 1 | 1 | | | 132815-004 | LABEL, PRINTER | |
| 58 | 2 | 2 | 2 | 2 | | | 821032 | SCREW 10-32 x 5/8 BLK | MTG Cover ASSY |
| 59 | | | | | | | | | |
| 60 | | | | | | | | | |
| 61 | | | | | | | | | |
| 62 | | | | | | | | | |
| 63 | | | | | | | | | |
| 64 | | | | | | | | | |
| 65 | | | | | | | | | |
| 66 | | | | | | | | | |
| 67 | | | | | | | | | |
| 68 | 1 | 1 | 1 | 1 | | A | 132770-003 | LOGIC BOARD ASSY ADM-36 | |
| 69 | 1 | 1 | 1 | 1 | | | 809292 | CONNECTOR, KBD (PART OF LOGIC BD ASSY) | |
| 70 | 2 | 2 | 2 | 2 | | | 809300 | CONNECTOR, 25 PIN (PART OF LOGIC BD ASSY) | |
| 71 | | | | | | | | | |
| 72 | | | | | | | | | |
| 73 | | | | | | | | | |
| 74 | | | | | | | | | |
| 75 | | | | | | | | | |

CUSTOMER SERVICE DEPT. | SIZE A | FSCM NO. 98438 | ADM 36 BASE | SH 4 | REF REV

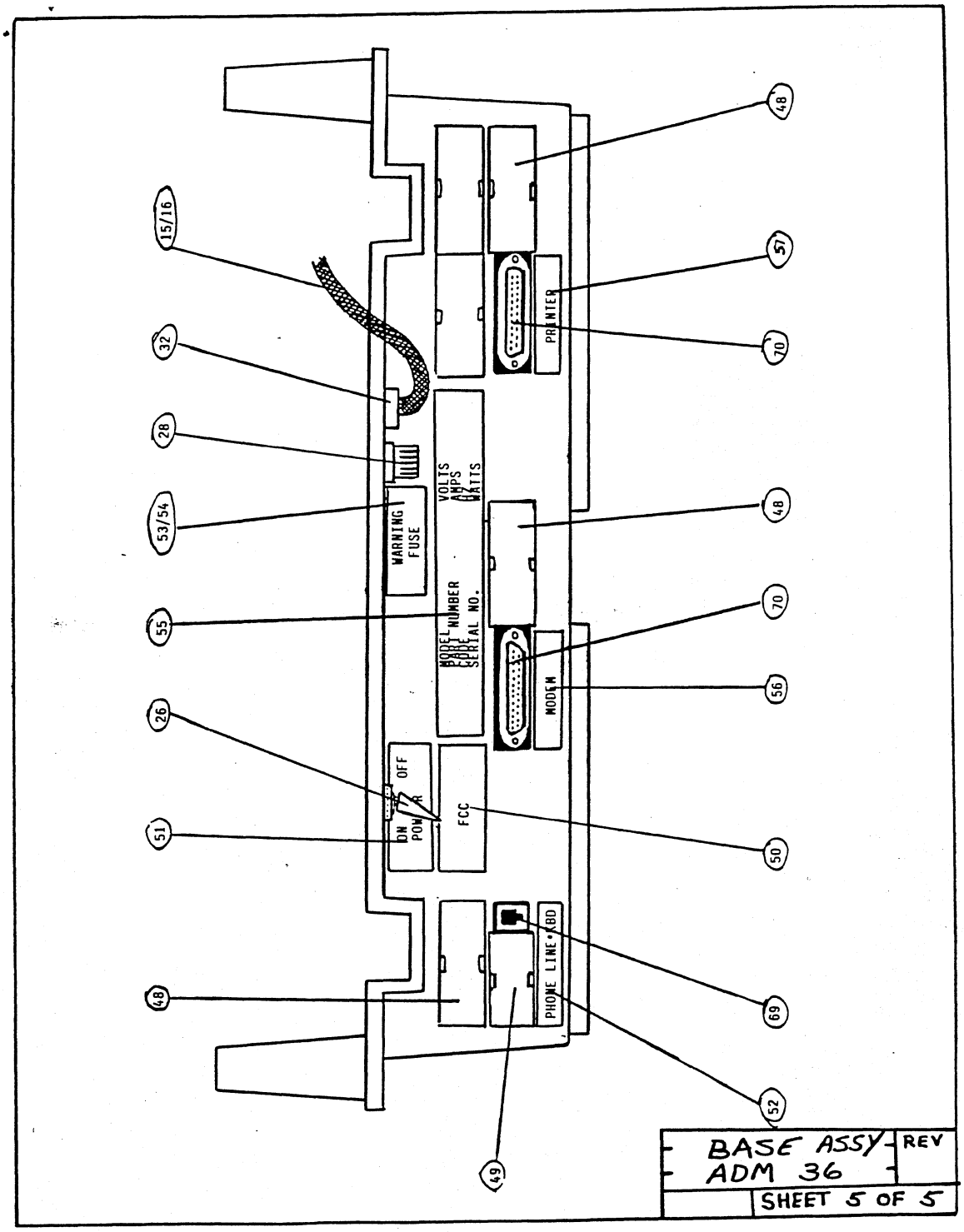
48
15/16
57
PRINTER
70
32
28
53/54
WARNING
FUSE
VOLTS
AMPS
WATTS
48
55
MODEL NUMBER
CODE
SERIAL NO.
70
MODEM
56
26
OFF
ON
POWER
FCC
51
50
PHONE LINE
KBD
48
69
52
49
BASE ASSY
ADM 36
REV
SHEET 5 OF 5

| REVISIONS | | | | |
|---|---|---|---|---|
| SHT | ZONE | LTR | DESCRIPTION | DATE / APPROVED |
| | | X | INC DCN 3378 | |
| | | A | PRODUCTION REL DCN 3402 | |
| | | B | INCORP DCN # 3213 | |
| | | C | INCORP DCN # 3488 | |
| | | D | INCORP DCN # 3507 | |
| | | E | INCORP DCN # 3542 | |
| | | F | INCORP DCN # 3571 | |
| | | G | INCORP DCN # 3621 | |
| | | H | INCORP DCN # 3645 | |
| | | J | INCORP DCN # 3324 | |
| | | K | INCORP DCN # 3828 | |
| | | L | INCORP DCN # 3972 | |
| | | — | INCORP DEV # D3470 | |
| | | — | INCORP DEV # D3651 | |
| | | M | INCORP DCN # 4195 | |
| | | — | INC DEV # 4161 | |
| | | N | INC DCN # 4238 | |
| | | P | INC DCN # 4171 | |
| | | R | INC DCN # 4336 | |
| | | S | INC DCN # 4335 | |
| | | T | INC DCN # 4392 | |

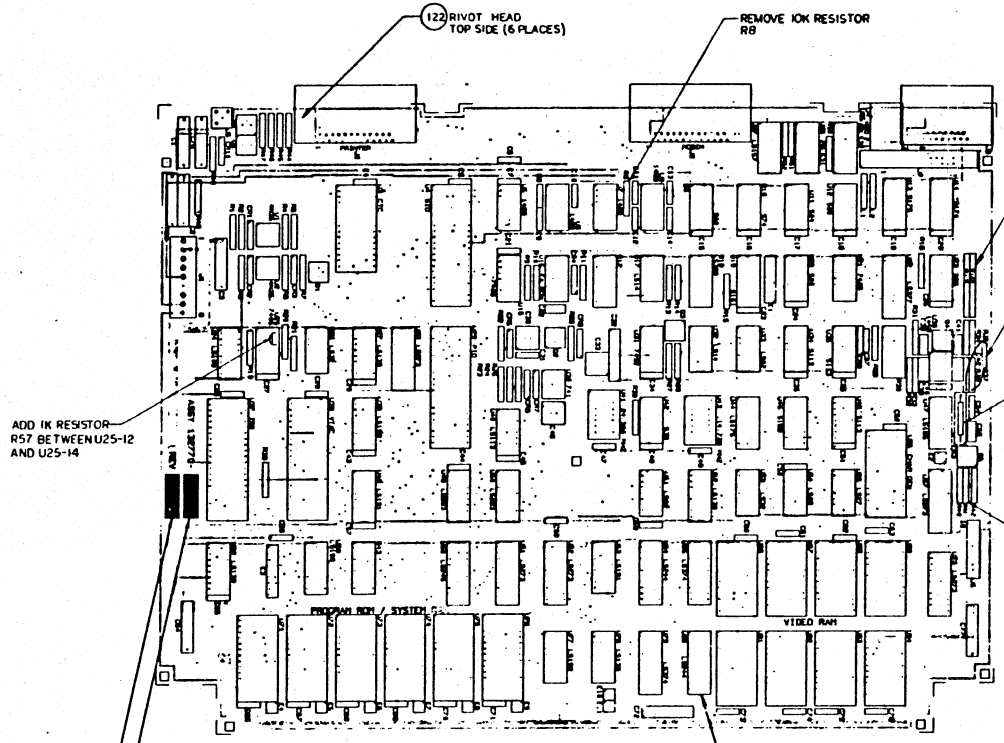


NOTES: UNLESS OTHERWISE SPECIFIED
1. FOR SCHEMATIC REFER TO 132772
2. FOR PRINTED WIRING BOARD REFER TO 132771

REWORK INSTRUCTIONS:
ETCH CUTS

| | | |
|---|---|---|
| BETWEEN | U28-1 | C |
| | R41 AND 42 | C |
| | R41 AND C53 | C |
| | C55 AND C53 | C |
| | R54 AND R37 | S |
| | R37 AND R36 | S |
| | C55 AND R36 | S |
| | EMITTER OF Q4 AND R46 | C |
| | NEAR C15 | C (SEE DETAIL 'A') |
| | R46 | C (SEE DETAIL 'B') |

JUMPER LIST
ADD JUMPERS WITH 30 AWG INSULATED WIRE UNLESS OTHERWISE STATED

| | | |
|---|---|---|
| | U28-1 TO U61-1 | |
| | U51-12 TO U25-12 | |
| | U51-11 TO U17-6 | |
| | U51-13 TO J5-5 | |
| BETWEEN | Q5 BASE AND R41 | |
| | R42 AND C55 | |
| | C55 AND R37 | |
| | C54 AND C53 | |
| | C54 AND R36 | |
| | R46 TO 54 | |
| | R46 TO +12V (SEE DETAIL 'B') | |
| | U28 9-TO U25-13 | |

SHORTING JACK JUMPER LISTING (REF P/N 120)

| JUMPER | PINS (-003) | JUMPER | PINS (-004) |
|---|---|---|---|
| E1 | 1-2 | E1 | 1-2 |
| | 3-4 | | 3-4 |
| | 5-6 | | 5-6 |
| | 7-8 | | 7-8 |
| | 9-10 | | 9-10 |
| | 13-14 | | 13-14 |
| E2 | 2-4 | E2 | 2-4 |
| E3 | 3-4 | E3 | 3-4 |
| | 7-8 | | 7-8 |
| | 11-12 | | 11-12 |
| | 13-14 | | 13-14 |
| | 15-16 | | 15-16 |
| E4-E5 | 3-4 | E4-E5 | 2-3 |
| E9 | 1-3 | E6-E7 | 3-4 |
| E10 | 3-4 | E8-E9 | 1-3 |
| E11 | 1-2 | E10 | 3-4 |
| | | E11 | 1-2 |

1 2
3 4
TYPICAL ORIENTATION

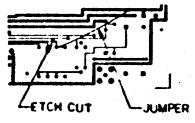

DETAIL 'B'
COMPONENT SIDE

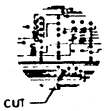

DETAIL 'A'
COMPONENT SIDE

FOR SEPARATE PARTS LIST SEE PL132770

| | | | |
|---|---|---|---|
| -003 | 132760 | DL132760 | |
| DASH NO | NEXT ASSY | U-EDON | |
| | APPLICATION | | |

UNLESS OTHERWISE SPECIFIED
DIM IN INCHES
TOLERANCES
x ± 1
xx ± 03
xxx ± 010
ANGLES ± 0.5°

CONTR NO
DR R MATSUETO
CHK
DSGN
ENGR
PROJ
REL
APPD
APPD

PROPRIETARY LEGEND
EXCEPT AS MAY BE OTHERWISE AUTHORIZED BY CONTRACT THESE DRAWINGS AND SPECIFICATIONS ARE THE PROPERTY OF LEAR SIEGLER INC. ARE ISSUED IN STRICT CONFIDENCE AND SHALL NOT BE REPRODUCED COPIED OR USED FOR THE MANUFACTURE OR SALE OF THE APPARATUS WITHOUT WRITTEN PERMISSION

LEAR SIEGLER, INC.
DATA PRODUCTS DIVISION
ANAHEIM, CALIFORNIA 92803

P C BOARD ASSEMBLY
ADM 36 OEM

| SIZE | FSCM NO | DWG NO | LTR |
|---|---|---|---|
| D | 98438 | 132770 | T |
| SCALE FULL | | SHEET 1 OF 2 | |

1 2 3 4 5 6 8

| REVISIONS | | | | | |
|---|---|---|---|---|---|
| SHT | ZONE | LTR | DESCRIPTION | DATE | APPROVED |
| | | X1 | PILOT RELEASE PER DCN 3082 | | |
| | | X2 | INC DCN 3 2[illegible] | [illegible] | [illegible] |
| | | X3 | INC DCN 3 5 | [illegible] | [illegible] |
| | | X4 | INC DCN 3287 | [illegible] | [illegible] |
| | | X5 | INC DCN 3200 | [illegible] | [illegible] |
| | | | CONT ON SHT 1 | | |

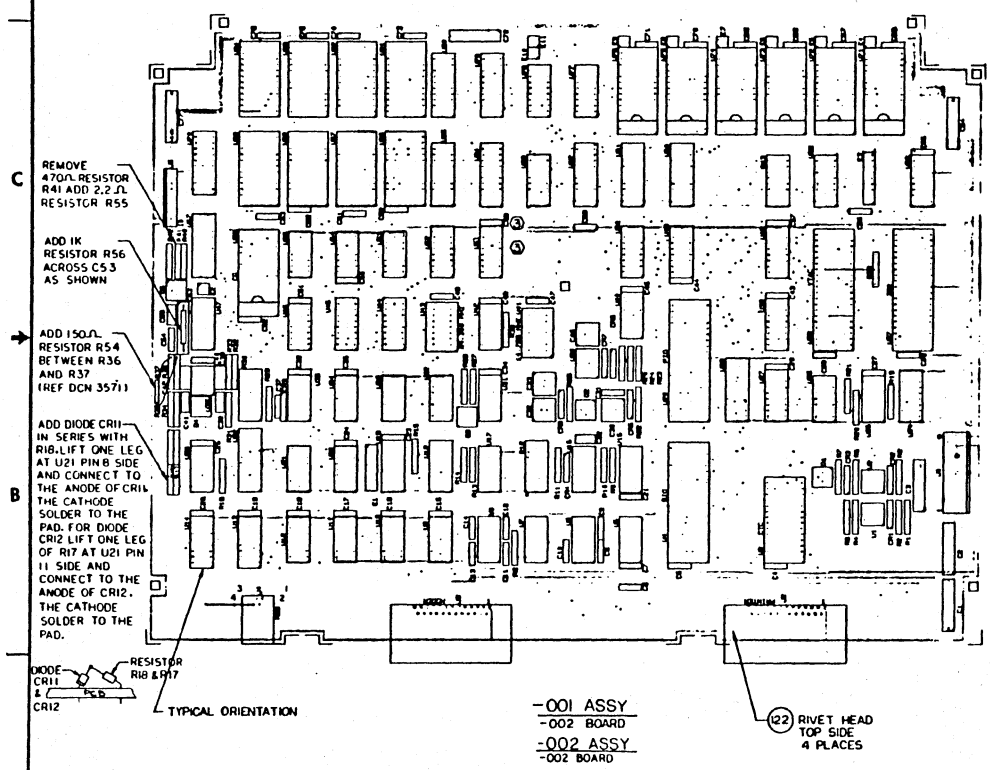


NOTES: UNLESS OTHERWISE SPECIFIED
1. FOR SCHEMATIC REFER TO 132772
2. FOR PRINTED WIRING BOARD REFER TO 132771
③ DENOTES SPARE COMPONENTS OR IC LOCATION.

REWORK INSTRUCTIONS:
ETCH CUTS
U12-3 C
U13-13 C
U20-1 S
U26-3 C
U26-11 C
U26-13 S
U53-3 C (BETWEEN U60-19)
U55-8 C
U61-1 FROM +5V BUSS (2 PLCS)
U28-1 C

BETWEEN:
R41 AND R42 C
R41 AND C53 C
C55 AND C53 C
R54 AND R37 S
R37 AND R36 S
C55 AND R36 S
R46 (SEE DETAIL 'B') C

JUMPER LIST
ADD JUMPERS WITH 30 AWG INSULATED WIRE
UNLESS OTHERWISE STATED
U9-8 TO U11-3
U9-9 TO U33-3
U9-10 TO U26-3
U11-4 TO U60-19
U11-9 TO U13-9
U12-6 TO U20-1
U13-7 TO U21-9
U14-5 TO U26-9
U14-15 TO U26-10
U20-6 TO U13-4
U22-16 TO U14-14
U26-8 TO U13-13
U26-11 TO U21-1
U26-12 TO U55-8
U44-2 TO U12-4
U44-14 TO U12-5
U55-6 TO U22-17
U61-1 TO U32-4
U61-20 TO U60-20 (24 AWG)
U70-15 TO U26-13
U28-1 TO U61-1
R46 TO +12V (SEE DETAIL 'B') SEE SHEET 1

BETWEEN:
Q5 BASE AND R41
R42 AND C55
C55 AND R37
C54 AND C53
C54 AND R36

SHORTING JACK JUMPER LISTING (REF F/N 120)

| JUMPER | PINS (001) | PINS (002) |
|---|---|---|
| E1 | 1-2 | 1-2 |
| | 3-4 | 3-4 |
| | 5-6 | 5-6 |
| | 7-8 | 7-8 |
| | 9-10 | 9-10 |
| E2 | 2-4 | 2-4 |
| E3 | 1-2 | 1-2 |
| | 5-6 | 5-6 |
| | 9-10 | 9-10 |
| | 13-14 | 13-14 |
| | 15-16 | 15-16 |
| E4-E8 | 3-4 | 3-4 |
| E9 | 1-3 | 1-3 |
| E10 | 1-2 | 3-4 |
| E11 | 3-4 | 1-2 |

1 2
3 4
TYPICAL ORIENTATION

FOR SEPARATE PARTS LIST SEE PL132770

| DASH NO | NEXT ASSY | USED ON |
|---|---|---|
| 001 | 132760 | DL132760 |
| | APPLICATION | |

UNLESS OTHERWISE SPECIFIED
DIM IN INCHES
TOLERANCES
X± 1
XX± 03
XXX± 010
ANGLES ±0.5°

CONTR NO
DRS FIGUEROA
CHK
DSGN
ENGR
PROJ
REL
APPD
APPD

LEAR SIEGLER, INC
DATA PRODUCTS DIVISION
ANAHEIM, CALIFORNIA 92801

P C BOARD ASSEMBLY
ADM 36 LOGIC

SIZE D | FSCM NO 98438 | DWG NO 132770 | REV T
SCALE FULL | SHEET 2 OF 2

PROPRIETARY LEGEND
EXCEPT AS MAY BE OTHERWISE AUTHORIZED BY CONTRACT THESE DRAWINGS AND SPECIFICATIONS ARE THE PROPERTY OF LEAR SIEGLER INC. ARE ISSUED IN STRICT CONFIDENCE AND SHALL NOT BE REPRODUCED COPIED OR USED FOR THE MANUFACTURE OR SALE OF THE APPARATUS WITHOUT WRITTEN PERMISSION.

PARTSLIST :PL132770 PC BOARD ASSY, LOGIC, ADM 36 REV :T

ASSY :-001

APPR: APPR: REL: 12/06/82 PAGE 1

| F/N | QTY | PART NO. | DESCRIPTION | TYPE | NOTES | C1 | C2 |
|---|---|---|---|---|---|---|---|
| 6 | 1 | 132771-002 | PWB, ADM 36 LOGIC | | | | |
| 9 | 1 | 129467-02 | IC, TYPE 74LS02 | U | 33 | | |
| 10 | 1 | 129467-08 | IC, TYPE 74LS08 | U | 54 | | |
| 11 | 2 | 129467-14 | IC, TYPE 74LS14 | U | 17,32 | | |
| 12 | 1 | 129467-27 | IC, TYPE 74LS27 | U | 55 | | |
| 13 | 2 | 129467-32 | IC, TYPE 74LS32 | U | 26,53 | | |
| 14 | 2 | 129467-138 | IC, TYPE 74LS138 | U | 27,58 | | |
| 15 | 2 | 129467-139 | IC, TYPE 74LS139 | U | 52,78 | | |
| 16 | 1 | 129467-109 | IC, TYPE 74LS109 | U | 24 | | |
| 17 | 4 | 129467-158 | IC, TYPE 74LS158 | U | 39,45,59,77 | | |
| 18 | 1 | 129467-166 | IC, TYPE 74LS166 | U | 47 | | |
| 19 | 1 | 129467-175 | IC, TYPE 74LS175 | U | 44 | | |
| 20 | 2 | 129467-191 | IC, TYPE 74LS191 | U | 48,63 | | |
| 21 | 2 | 129467-244 | IC, TYPE 74LS244 | U | 64,80 | | |
| 22 | 1 | 129467-245 | IC, TYPE 74LS245 | U | 60 | | |
| 23 | 5 | 129467-273 | IC, TYPE 74LS273 | U | 28,57,61,62,70 | | |
| 24 | 2 | 129467-283 | IC, TYPE 74LS283 | U | 49,50 | | |
| 25 | 2 | 129467-374 | IC, TYPE 74LS374 | U | 65,79 * | | |
| 26 | 1 | 129467-377 | IC, TYPE 74LS377 | U | 22 | | |
| 27 | 1 | 129467-390 | IC, TYPE 74LS390 | U | 18 | | |
| 28 | 1 | 129467-113 | IC, TYPE 74LS113 | U | 40 | | |
| 30 | 3 | 129826-00 | IC, TYPE 74S00 | U | 9,12,20 | | |
| 31 | 1 | 129826-04 | IC, TYPE 74S04 | U | 11 | | |
| 32 | 1 | 129826-38 | IC, TYPE 74S38 | U | 42 | | |
| 33 | 1 | 129826-74 | IC, TYPE 74S74 | U | 10 | | |
| 34 | 1 | 129826-86 | IC, TYPE 74S86 | U | 23 | | |
| 35 | 3 | 129826-113 | IC, TYPE 74S113 | U | 34,35,46 | | |
| 36 | 1 | 129826-161 | IC, TYPE 74S161 | U | 19 | | |
| 37 | 1 | 129826-174 | IC, TYPE 74S174 | U | 14 | | |
| 38 | 1 | 129826-175 | IC, TYPE 74S175 | U | 13 | | |
| 39 | 2 | 128348-06 | IC, TYPE 7406 | U | 15,25 | | |
| 40 | 1 | 128348-26 | IC, TYPE 7426 | U | 21 | | |
| 41 | 1 | 128348-92 | IC, TYPE 7492 | U | 31 | | |
| 42 | 2 | 128348-1488 | IC, RS232 DRVR, TYPE 1488 | U | 5,7 | | |
| 43 | 2 | 128348-1489 | IC, RS232 RCVR, TYPE 1489 | U | 6,8 | | |
| 45 | 1 | 136038-001 | IC, EAROM, 100X14, ER1400 | U | 16 | | |
| 46 | 1 | 128348-741 | IC, DUAL OP-AMP, TYPE 741 | U | 30 | | |
| 47 | 1 | 128348-1458 | IC, DUAL OP-AMP, TYPE 1458 | U | 36 | | |
| 48 | 2 | 132616-001 | OPTOCOUPLER, LOW-GAIN 4N35 | U | 1,2 | | |
| 49 | 1 | 129762-4 | OSC, 14.728 MHZ | U | 41 | | |
| 50 | 1 | 129762-5 | OSC, 24.300 MHZ | U | 43 | | |
| 51 | 1 | 128348-5037 | IC, VTAC, TYPE 5037 | U | 38 | | |
| 52 | 1 | 132868-001 | IC, CPU, Z80 | U | 37 | | |
| 53 | 1 | 132868-002 | IC, PIO, 3881 | U | 29 | | |
| 54 | 1 | 132868-003 | IC, CTC, 3882 | U | 3 | | |
| 55 | 1 | 132868-004 | IC, SIO, 3887 | U | 4 | | |
| 57 | 1 | 132869-004 | IC,RAM,1KX8,250 NS, 4118 | U | 76 | | |
| 58 | 8 | 132869-001 | IC,RAM,1KX8,120 NS, 4118 | U | 66,67,68,69,81 | | |
| | | | | U | 82,83,84 | | |
| 59 | 1 | 132873-001 | IC, EPROM, 2716, CHAR GEN | U | 56 | | |

PARTSLIST :PL132770 PC BOARD ASSY, LOGIC, ADM 36 REV :T

ASSY :-001

12/06/82 PAGE 2

| F/N | QTY | PART NO. | DESCRIPTION | TYPE | NOTES | C1 | C2 |
|---|---|---|---|---|---|---|---|
| 60 | 1 | 129827-220 | EPROM, 36 V1.6 PROG 0000 | U | 71 | | |
| 61 | 1 | 129827-221 | EPROM, 36 V1.6 PROG 0800 | U | 72 | | |
| 62 | 1 | 129827-222 | EPROM, 36 V1.6 PROG 1000 | U | 73 | | |
| 63 | 1 | 129827-223 | EPROM, 36 V1.6 PROG 1800 | U | 74 | | |
| 64 | 1 | 129827-224 | EPROM, 36 V1.6 PROG 2000 | U | 75 | | |
| 65 | 2 | 805075 | CAP, 1 UF, MONO | C | 38, 41 | | |
| 66 | 7 | 805056 | CAP 15UF 20V TANT | C | 1, 2, 3, 53, 64, 72 | | |
| | | | | C | 77 | | |
| 67 | 1 | 128518-1000 | CAP, 1000 PF, 1%, MICA | C | 22 | | |
| 68 | 2 | 805076 | CAP, 2.2 UF, MONO | C | 39, 42 | | |
| 69 | 3 | 132617-106 | CAP 10UF 35V AL ELECT RAD | C | 30, 33, 46 | | |
| 70 | 1 | 128518-101 | CAP, 100 PF, 5%, MICA | C | 55 | | |
| 71 | 1 | 51001274-068 | CAP, 47 UF, | C | 32 | | |
| 72 | 7 | 805074 | CAP, 390 PF, MONO | C | 8, 9, 10, 11, 12, 13 | | |
| | | | | C | 14 | | |
| 73 | 52 | 805046 | CAP 0.1UF 50V MONOLITH DIP | C | 4, 5, 6, 7, 15, 16 | | |
| | | | | C | 17, 18, 19, 20, 21 | | |
| | | | | C | 23, 24, 25, 26, 27 | | |
| | | | | C | 28, 29, 31, 34, 35 | | |
| | | | | C | 36, 37, 40, 43, 44 | | |
| | | | | C | 45, 47, 48, 49, 50 | | |
| | | | | C | 51, 52, 54, 56, 57 | | |
| | | | | C | 58, 60, 61, 62, 63 | | |
| | | | | C | 65, 66, 67, 68, 69 | | |
| | | | | C | 70, 71, 73, 74, 75 | | |
| | | | | C | 76 | | |
| 76 | 1 | 128533-680 | RES, CF, 68, 5%, 1/4W | R | 42 | | |
| 77 | 1 | 128533-470 | RES, CF, 47, 5%, 1/4 W | R | 15 | | |
| 78 | 2 | 128533-271 | RES, CF, 270, 5%, 1/4W | R | 28, 37 | | |
| 79 | 2 | 128533-751 | RES, CF, 750, 5%, 1/4 W | R | 13, 14 | | |
| 80 | 7 | 128533-102 | RES, CF, 1K, 5%, 1/4W | R | 16, 18, 19, 20, 21 | | |
| | | | | R | 27, 56 | | |
| 81 | 2 | 128533-472 | RES, CF, 4.7K, 5%, 1/4W | R | 23, 24 | | |
| 82 | 1 | 128533-183 | RES, CF, 18 K, 5%, 1/4 W | R | 9 | | |
| 83 | 1 | 128533-223 | RES, CF, 22K, 5%, 1/4 W | R | 25 | | |
| 84 | 1 | 128533-681 | RES, CF, 680, 5%, 1/4 W | R | 17 | | |
| 85 | 1 | 128533-393 | RES, CF, 39 K, 5%, 1/4 W | R | 10 | | |
| 86 | 1 | 128533-303 | RES, CF, 30K, 5%, 1/4W | R | 11 | | |
| 87 | 4 | 128533-103 | RES, CF, 10K, 5%, 1/4W | R | 8, 26, 36, 39 | | |
| 88 | 2 | 128533-473 | RES, CF, 47 K, 5%, 1/4 W | R | 22, 29 | | |
| 89 | 4 | 128533-563 | RES, CF, 56 K, 5%, 1/4 W | R | 31, 32, 33, 34 | | |
| 90 | 1 | 128533-682 | RES, CF, 6.8 K, 5%, 1/4 W | R | 35 | | |
| 91 | 2 | 128533-121 | RES, CF, 120, 5%, 1/4 W | R | 38, 40 | | |
| 92 | 2 | 128533-471 | RES, CF, 470, 5%, 1/4 W | R | 1, 7 | | |
| 93 | 2 | 128533-151 | RES, CF, 150, 5%, 1/4 W | R | 3, 54 | | |
| 94 | 1 | 128533-181 | RES, CF, 180, 5%, 1/4W | R | 2 | | |
| 95 | 1 | 128533-392 | RES, CF, 3.9 K, 5%, 1/4 W | R | 6 | | |
| 96 | 2 | 128533-683 | RES, CF, 68 K, 5%, 1/4 W | R | 4, 5 | | |
| 97 | 1 | 128533-222 | RES, CF, 2.2 K, 5%, 1/4 W | R | 55 | | |
| 98 | 1 | 819040 | RES NTWK, DIP, 10 K, 15 R | R | 43 | | |

PARTSLIST :PL132770 PC BOARD ASSY, LOGIC, ADM 36 REV :T

ASSY :-001

12/06/82 PAGE 3

| F/N | QTY | PART NO. | DESCRIPTION | TYPE | NOTES | C1 | C2 |
|---|---|---|---|---|---|---|---|
| 99 | 1 | 819078 | RES NTWK, DIP, 4.7 K, 15 R | R | 30 | | |
| 100 | 1 | 819074 | RES NTWK, DIP, 1 K, 8 R | R | 12 | | |
| 101 | 2 | 810001 | TSTR, 2N3904 | Q | 1,2 | | |
| 102 | 1 | 810003 | TSTR, 2N3906 | Q | 3 | | |
| 103 | 1 | 810036 | TSTR, 2N2222 | Q | 4 | | |
| 104 | 1 | 810022 | TSTR, 2N2907A | Q | 5 | | |
| 106 | 11 | 808042 | DIODE FASTSW 1N914B/1N4448 | CR | 1,2,3,4,5,6,7,8 | | |
| | | | | CR | 9,17,18 | | |
| 108 | 1 | 802030 | SOCKET, DIP, 14 PIN | XU | 16 | | |
| 109 | 8 | 802033 | DIP SOCKT 24P LOPROF TINPL | XU | 66,67,68,69,81 | | |
| | | | | XU | 82,83,84 | | |
| 110 | 8 | 802036 | SOCKET, DIP, 28 PIN | XU | 71,72,73,74,75 | | |
| | | | | XU | 76,56,3 | | |
| 111 | 4 | 802034 | DIP SOCKT 40P LOPROF TINPL | UX | 4,29,37,38 | | |
| 113 | 9 | 809293 | HEADER, 4 PIN, 2X2, 025 SQ | E | 2,4,5,6,7,8,9 | | |
| | | | | E | 10,11 | | |
| 114 | 1 | 809294 | HEADER, 18 PIN, 2X9, 025SQ | E | 3 | | |
| 115 | 1 | 809295 | HEADER, 16 PIN, 2X8, 025SQ | E | 1 | | |
| 116 | 1 | 809181 | HDR 9-PIN PCBMT 0.025" SQ | J | 1 | | |
| 117 | 2 | 809300 | CONN 25P RCPT DSUB RTANGL | J | 2,3 | | |
| 118 | 1 | 809292 | CONN, 4 PIN,.616 TEL HD SET | J | 4 | | |
| 119 | 1 | 809220 | HDR.10-PIN PCBMTG 0.025"SQ | J | 5 | | |
| 120 | 19 | 809296 | JACK, 2 PIN SHORTING | | | | |
| 122 | 4 | 824002 | RIVET SEMITUBULR 1/0Dx7/32 | | FOR J2 & 3 | | |
| 131 | 0 | 132772 | SCHEMATIC, ADM 36 | | | | |

********** END OF LIST **********

PARTSLIST :PL132770 PC BOARD ASSY, LOGIC, ADM 36 REV :T

ASSY :-002

12/06/82 PAGE 4

| F/N | QTY | PART NO. | DESCRIPTION | TYPE | NOTES | C1 | C2 |
|---|---|---|---|---|---|---|---|
| 6 | 1 | 132771-002 | PWB, ADM 36 LOGIC | | | | |
| 9 | 1 | 129467-02 | IC, TYPE 74LS02 | U | 33 | | |
| 10 | 1 | 129467-08 | IC, TYPE 74LS08 | U | 54 | | |
| 11 | 2 | 129467-14 | IC, TYPE 74LS14 | U | 17, 32 | | |
| 12 | 1 | 129467-27 | IC, TYPE 74LS27 | U | 55 | | |
| 13 | 2 | 129467-32 | IC, TYPE 74LS32 | U | 26, 53 | | |
| 14 | 2 | 129467-138 | IC, TYPE 74LS138 | U | 27, 58 | | |
| 15 | 2 | 129467-139 | IC, TYPE 74LS139 | U | 52, 78 | | |
| 16 | 1 | 129467-109 | IC, TYPE 74LS109 | U | 24 | | |
| 17 | 4 | 129467-158 | IC, TYPE 74LS158 | U | 39, 45, 59, 77 | | |
| 18 | 1 | 129467-166 | IC, TYPE 74LS166 | U | 47 | | |
| 19 | 1 | 129467-175 | IC, TYPE 74LS175 | U | 44 | | |
| 20 | 2 | 129467-191 | IC, TYPE 74LS191 | U | 48, 63 | | |
| 21 | 2 | 129467-244 | IC, TYPE 74LS244 | U | 64, 80 | | |
| 22 | 1 | 129467-245 | IC, TYPE 74LS245 | U | 60 | | |
| 23 | 5 | 129467-273 | IC, TYPE 74LS273 | U | 28, 57, 61, 62, 70 | | |
| 24 | 2 | 129467-283 | IC, TYPE 74LS283 | U | 49, 50 | | |
| 25 | 2 | 129467-374 | IC, TYPE 74LS374 | U | 65, 79 | | |
| 26 | 1 | 129467-377 | IC, TYPE 74LS377 | U | 22 | | |
| 27 | 1 | 129467-390 | IC, TYPE 74LS390 | U | 18 | | |
| 28 | 1 | 129467-113 | IC, TYPE 74LS113 | U | 40 | | |
| 30 | 3 | 129826-00 | IC, TYPE 74S00 | U | 9, 12, 20 | | |
| 31 | 1 | 129826-04 | IC, TYPE 74S04 | U | 11 | | |
| 32 | 1 | 129826-38 | IC, TYPE 74S38 | U | 42 | | |
| 33 | 1 | 129826-74 | IC, TYPE 74S74 | U | 10 | | |
| 34 | 1 | 129826-86 | IC, TYPE 74S86 | U | 23 | | |
| 35 | 3 | 129826-113 | IC, TYPE 74S113 | U | 34, 35, 46 | | |
| 36 | 1 | 129826-161 | IC, TYPE 74S161 | U | 19 | | |
| 37 | 1 | 129826-174 | IC, TYPE 74S174 | U | 14 | | |
| 38 | 1 | 129826-175 | IC, TYPE 74S175 | U | 13 | | |
| 39 | 2 | 128348-06 | IC, TYPE 7406 | U | 15, 25 | | |
| 40 | 1 | 128348-26 | IC, TYPE 7426 | U | 21 | | |
| 41 | 1 | 128348-92 | IC, TYPE 7492 | U | 31 | | |
| 42 | 2 | 128348-1488 | IC, RS232 DRVR, TYPE 1488 | U | 5, 7 | | |
| 43 | 2 | 128348-1489 | IC, RS232 RCVR, TYPE 1489 | U | 6, 8 | | |
| 45 | 1 | 136038-001 | IC, EAROM, 100X14, ER1400 | U | 16 | | |
| 46 | 1 | 128348-741 | IC, DUAL OP-AMP, TYPE 741 | U | 30 | | |
| 47 | 1 | 128348-1458 | IC, DUAL OP-AMP, TYPE 1458 | U | 36 | | |
| 48 | 2 | 132616-001 | OPTOCOUPLER, LOW-GAIN 4N35 | U | 1, 2 | | |
| 49 | 1 | 129762-4 | OSC, 14.728 MHZ | U | 41 | | |
| 50 | 1 | 129762-5 | OSC, 24.300 MHZ | U | 43 | | |
| 51 | 1 | 128348-5037 | IC, VTAC, TYPE 5037 | U | 38 | | |
| 52 | 1 | 132868-001 | IC, CPU, Z80 | U | 37 | | |
| 53 | 1 | 132868-002 | IC, PIO, 3881 | U | 29 | | |
| 54 | 1 | 132868-003 | IC, CTC, 3882 | U | 3 | | |
| 55 | 1 | 132868-004 | IC, SIO, 3887 | U | 4 | | |
| 56 | 4 | 129466-4802 | IC 2Kx8 STATIC RAM 120 nS | U | 67, 69, 82, 84 | | |
| 57 | 1 | 132869-004 | IC,RAM,1KX8,250 NS, 4118 | U | 76 | | |
| 60 | 1 | 129827-220 | EPROM, 36 V1.6 PROG 0000 | U | 71 | | |
| 61 | 1 | 129827-221 | EPROM, 36 V1.6 PROG 0800 | U | 72 | | |

PARTSLIST :PL132770 PC BOARD ASSY, LOGIC, ADM 36 REV :T

ASSY :-002

12/06/82 PAGE 5

| F/N | QTY | PART NO. | DESCRIPTION | TYPE | NOTES | C1 | C2 |
|---|---|---|---|---|---|---|---|
| 62 | 1 | 129827-222 | EPROM, 36 V1.6 PROG 1000 | U | 73 | | |
| 63 | 1 | 129827-223 | EPROM, 36 V1.6 PROG 1800 | U | 74 | | |
| 64 | 1 | 129827-224 | EPROM, 36 V1.6 PROG 2000 | U | 75 | | |
| 65 | 2 | 805075 | CAP, 1 UF, MONO | C | 38, 41 | | |
| 66 | 7 | 805056 | CAP 15UF 20V TANT | C | 1, 2, 3, 53, 64, 72 | | |
| | | | | C | 77 | | |
| 67 | 1 | 128518-1000 | CAP, 1000 PF, 1%, MICA | C | 22 | | |
| 68 | 2 | 805076 | CAP, 2.2 UF, MONO | C | 39, 42 | | |
| 69 | 3 | 132617-106 | CAP 10UF 35V AL ELECT RAD | C | 30, 33, 46 | | |
| 70 | 1 | 128518-101 | CAP, 100 PF, 5%, MICA | C | 55 | | |
| 71 | 1 | 51001274-068 | CAP, 47 UF, | C | 32 | | |
| 72 | 7 | 805074 | CAP, 390 PF, MONO | C | 8, 9, 10, 11, 12, 13 | | |
| | | | | C | 14 | | |
| 73 | 52 | 805046 | CAP 0.1UF 50V MONOLITH DIP | C | 4, 5, 6, 7, 15, 16 | | |
| | | | | C | 17, 18, 19, 20, 21 | | |
| | | | | C | 23, 24, 25, 26, 27 | | |
| | | | | C | 28, 29, 31, 34, 35 | | |
| | | | | C | 36, 37, 40, 43, 44 | | |
| | | | | C | 45, 47, 48, 49, 50 | | |
| | | | | C | 51, 52, 54, 56, 57 | | |
| | | | | C | 58, 60, 61, 62, 63 | | |
| | | | | C | 65, 66, 67, 68, 69 | | |
| | | | | C | 70, 71, 73, 74, 75 | | |
| | | | | C | 76 | | |
| 76 | 1 | 128533-680 | RES, CF, 68, 5%, 1/4W | R | 42 | | |
| 77 | 1 | 128533-470 | RES, CF, 47, 5%, 1/4 W | R | 15 | | |
| 78 | 2 | 128533-271 | RES, CF, 270, 5%, 1/4W | R | 28, 37 | | |
| 79 | 2 | 128533-751 | RES, CF, 750, 5%, 1/4 W | R | 13, 14 | | |
| 80 | 7 | 128533-102 | RES, CF, 1K, 5%, 1/4W | R | 16, 18, 19, 20, 21 | | |
| | | | | R | 27, 56 | | |
| 81 | 2 | 128533-472 | RES, CF, 4.7K, 5%, 1/4W | R | 23, 24 | | |
| 82 | 1 | 128533-183 | RES, CF, 18 K, 5%, 1/4 W | R | 9 | | |
| 83 | 1 | 128533-223 | RES, CF, 22K, 5%, 1/4 W | R | 25 | | |
| 84 | 1 | 128533-681 | RES, CF, 680, 5%, 1/4 W | R | 17 | | |
| 85 | 1 | 128533-393 | RES, CF, 39 K, 5%, 1/4 W | R | 10 | | |
| 86 | 1 | 128533-303 | RES, CF, 30K, 5%, 1/4W | R | 11 | | |
| 87 | 4 | 128533-103 | RES, CF, 10K, 5%, 1/4W | R | 8, 26, 36, 39 | | |
| 88 | 2 | 128533-473 | RES, CF, 47 K, 5%, 1/4 W | R | 22, 29 | | |
| 89 | 4 | 128533-563 | RES, CF, 56 K, 5%, 1/4 W | R | 31, 32, 33, 34 | | |
| 90 | 1 | 128533-682 | RES, CF, 6.8 K, 5%, 1/4 W | R | 35 | | |
| 91 | 2 | 128533-121 | RES, CF, 120, 5%, 1/4 W | R | 38, 40 | | |
| 92 | 2 | 128533-471 | RES, CF, 470, 5%, 1/4 W | R | 1, 7 | | |
| 93 | 2 | 128533-151 | RES, CF, 150, 5%, 1/4 W | R | 3, 54 | | |
| 94 | 1 | 128533-181 | RES, CF, 180, 5%, 1/4W | R | 2 | | |
| 95 | 1 | 128533-392 | RES, CF, 3.9 K, 5%, 1/4 W | R | 6 | | |
| 96 | 2 | 128533-683 | RES, CF, 68 K, 5%, 1/4 W | R | 4, 5 | | |
| 97 | 1 | 128533-222 | RES, CF, 2.2 K, 5%, 1/4 W | R | 55 | | |
| 98 | 1 | 819040 | RES NTWK, DIP, 10 K, 15 R | R | 43 | | |
| 99 | 1 | 819078 | RES NTWK, DIP, 4.7 K, 15 R | R | 30 | | |
| 100 | 1 | 819074 | RES NTWK, DIP, 1 K, 8 R | R | 12 | | |

PARTSLIST :PL132770 PC BOARD ASSY, LOGIC, ADM 36 REV :T

ASSY :-002

12/06/82 PAGE 6

| F/N | QTY | PART NO. | DESCRIPTION | TYPE | NOTES | C1 | C2 |
|---|---|---|---|---|---|---|---|
| 101 | 2 | 810001 | TSTR, 2N3904 | Q | 1,2 | | |
| 102 | 1 | 810003 | TSTR, 2N3906 | Q | 3 | | |
| 103 | 1 | 810036 | TSTR, 2N2222 | Q | 4 | | |
| 104 | 1 | 810022 | TSTR, 2N2907A | Q | 5 | | |
| 106 | 11 | 808042 | DIODE FASTSW 1N914B/1N4448 | CR | 1,2,3,4,5,6,7,8 | | |
| | | | | CR | 9,17,18 | | |
| 108 | 1 | 802030 | SOCKET, DIP, 14 PIN | XU | 16 | | |
| 109 | 4 | 802033 | DIP SOCKT 24P LOPROF TINPL | XU | 67,69,82,84 | | |
| 110 | 8 | 802036 | SOCKET, DIP, 28 PIN | XU | 71,72,73,74,75 | | |
| | | | | XU | 76,56,3 | | |
| 111 | 4 | 802034 | DIP SOCKT 40P LOPROF TINPL | UX | 4,29,37,38 | | |
| 113 | 9 | 809293 | HEADER, 4 PIN, 2X2, 025 SQ | E | 2,4,5,6,7,8,9 | | |
| | | | | E | 10,11 | | |
| 114 | 1 | 809294 | HEADER, 18 PIN, 2X9, 025SQ | E | 3 | | |
| 115 | 1 | 809295 | HEADER, 16 PIN, 2X8, 025SQ | E | 1 | | |
| 116 | 1 | 809181 | HDR 9-PIN PCBMT 0.025" SQ | J | 1 | | |
| 117 | 2 | 809300 | CONN 25P RCPT DSUB RTANGL | J | 2,3 | | |
| 118 | 1 | 809292 | CONN, 4 PIN,.616 TEL HD SET | J | 4 | | |
| 119 | 1 | 809220 | HDR 10-PIN PCBMTG 0.025"SQ | J | 5 | | |
| 120 | 19 | 809296 | JACK, 2 PIN SHORTING | | | | |
| 122 | 4 | 824002 | RIVET SEMITUBULR 1/8Dx7/32 | | FOR J2 & 3 | | |
| 127 | 1 | 132873-002 | IC EPROM ADM36 CHAR GEN | U | 56 | | |
| 131 | 0 | 132772 | SCHEMATIC, ADM 36 | | | | |

********** END OF LIST **********

PARTSLIST :PL132770 PC BOARD ASSY, LOGIC, ADM 36 REV :T

ASSY :-003

12/06/82 PAGE 7

| F/N | QTY | PART NO. | DESCRIPTION | TYPE | NOTES | C1 | C2 |
|---|---|---|---|---|---|---|---|
| 4 | 1 | 136261-012 | PGMD 2764 ADM36 V1.70 0000 | U | 71 | | |
| 5 | 1 | 129466-2016 | IC 2Kx8 STATIC RAM 200 nS | U | 76 | | |
| 7 | 1 | 132771-005 | PWB, ADM 36 LOGIC | | | | |
| 8 | 1 | 131671-015 | PGMD 2732 ADM36 V1.70 2000 | U | 72 | | |
| 9 | 2 | 129467-02 | IC, TYPE 74LS02 | U | 33,51 | | |
| 10 | 1 | 129467-08 | IC, TYPE 74LS08 | U | 54 | | |
| 11 | 2 | 129467-14 | IC, TYPE 74LS14 | U | 17,32 | | |
| 12 | 1 | 129467-27 | IC, TYPE 74LS27 | U | 55 | | |
| 13 | 2 | 129467-32 | IC, TYPE 74LS32 | U | 26,53 | | |
| 14 | 2 | 129467-138 | IC, TYPE 74LS138 | U | 27,58 | | |
| 15 | 2 | 129467-139 | IC, TYPE 74LS139 | U | 52,78 | | |
| 16 | 1 | 129467-109 | IC, TYPE 74LS109 | U | 24 | | |
| 17 | 4 | 129467-158 | IC, TYPE 74LS158 | U | 39,45,59,77 | | |
| 18 | 1 | 129467-166 | IC, TYPE 74LS166 | U | 47 | | |
| 19 | 1 | 129467-175 | IC, TYPE 74LS175 | U | 44 | | |
| 20 | 2 | 129467-191 | IC, TYPE 74LS191 | U | 48,63 | | |
| 21 | 2 | 129467-244 | IC, TYPE 74LS244 | U | 64,80 | | |
| 22 | 1 | 129467-245 | IC, TYPE 74LS245 | U | 60 | | |
| 23 | 5 | 129467-273 | IC, TYPE 74LS273 | U | 28,57,61,62,70 | | |
| 24 | 2 | 129467-283 | IC, TYPE 74LS283 | U | 49,50 | | |
| 25 | 2 | 129467-374 | IC, TYPE 74LS374 | U | 65,79 | | |
| 26 | 1 | 129467-377 | IC, TYPE 74LS377 | U | 22 | | |
| 27 | 1 | 129467-390 | IC, TYPE 74LS390 | U | 18 | | |
| 28 | 1 | 129467-113 | IC, TYPE 74LS113 | U | 40 | | |
| 29 | 1 | 129467-157 | IC, TYPE 74LS157 | U | 87 | | |
| 30 | 3 | 129826-00 | IC, TYPE 74S00 | U | 9,12,20 | | |
| 31 | 1 | 129826-04 | IC, TYPE 74S04 | U | 11 | | |
| 32 | 1 | 129826-38 | IC, TYPE 74S38 | U | 42 | | |
| 33 | 1 | 129826-74 | IC, TYPE 74S74 | U | 10 | | |
| 34 | 1 | 129826-86 | IC, TYPE 74S86 | U | 23 | | |
| 35 | 3 | 129826-113 | IC, TYPE 74S113 | U | 34,35,46 | | |
| 36 | 1 | 129826-161 | IC, TYPE 74S161 | U | 19 | | |
| 37 | 1 | 129826-174 | IC, TYPE 74S174 | U | 14 | | |
| 38 | 1 | 129826-175 | IC, TYPE 74S175 | U | 13 | | |
| 39 | 2 | 128348-06 | IC, TYPE 7406 | U | 15,25 | | |
| 40 | 1 | 128348-26 | IC, TYPE 7426 | U | 21 | | |
| 41 | 1 | 128348-92 | IC, TYPE 7492 | U | 31 | | |
| 42 | 2 | 128348-1488 | IC, RS232 DRVR, TYPE 1488 | U | 5,7 | | |
| 43 | 2 | 128348-1489 | IC, RS232 RCVR, TYPE 1489 | U | 6,8 | | |
| 45 | 1 | 136038-001 | IC, EAROM, 100X14, ER1400 | U | 16 | | |
| 46 | 1 | 128348-741 | IC, DUAL OP-AMP, TYPE 741 | U | 30 | | |
| 47 | 1 | 128348-1458 | IC, DUAL OP-AMP, TYPE 1458 | U | 36 | | |
| 48 | 2 | 132616-001 | OPTOCOUPLER, LOW-GAIN 4N35 | U | 1,2 | | |
| 49 | 1 | 129762-4 | OSC, 14.728 MHZ | U | 43 | | |
| 50 | 1 | 129762-5 | OSC, 24.300 MHZ | U | 41 | | |
| 51 | 1 | 128348-5037 | IC, VTAC, TYPE 5037 | U | 38 | | |
| 52 | 1 | 132868-001 | IC, CPU, Z80 | U | 37 | | |
| 53 | 1 | 132868-002 | IC, PIO, 3881 | U | 29 | | |
| 54 | 1 | 132868-003 | IC, CTC, 3882 | U | 3 | | |
| 55 | 1 | 132868-004 | IC, SIO, 3887 | U | 4 | | |

PARTSLIST :PL132770 PC BOARD ASSY, LOGIC, ADM 36 REV :T

ASSY :-003

12/06/82 PAGE 8

| F/N | QTY | PART NO. | DESCRIPTION | TYPE | NOTES | C1 | C2 |
|---|---|---|---|---|---|---|---|
| 56 | 4 | 129466-4802 | IC 2Kx8 STATIC RAM 120 nS | U | 67, 69, 82, 84 | | |
| 65 | 2 | 805075 | CAP, 1 UF, MONO | C | 38, 41 | | |
| 66 | 7 | 805056 | CAP 15UF 20V TANT | C | 1, 2, 3, 53, 64, 72 | | |
| | | | | C | 77 | | |
| 67 | 1 | 128518-1000 | CAP, 1000 PF, 1%, MICA | C | 22 | | |
| 68 | 2 | 805076 | CAP, 2.2 UF, MONO | C | 39, 42 | | |
| 69 | 3 | 132617-106 | CAP 10UF 35V AL ELECT RAD | C | 30, 33, 46 | | |
| 70 | 1 | 128518-101 | CAP, 100 PF, 5%, MICA | C | 55 | | |
| 71 | 1 | 51001274-068 | CAP, 47 UF, | C | 32 | | |
| 72 | 7 | 805074 | CAP, 390 PF, MONO | C | 8, 9, 10, 11, 12, 13 | | |
| | | | | C | 14 | | |
| 73 | 53 | 805046 | CAP 0.1UF 50V MONOLITH DIP | C | 4, 5, 6, 7, 15, 16 | | |
| | | | | C | 17, 18, 19, 20, 21 | | |
| | | | | C | 23, 24, 25, 26, 27 | | |
| | | | | C | 28, 29, 31, 34, 35 | | |
| | | | | C | 36, 37, 40, 43, 44 | | |
| | | | | C | 45, 47, 48, 49, 50 | | |
| | | | | C | 51, 52, 54, 56, 57 | | |
| | | | | C | 58, 60, 61, 62, 63 | | |
| | | | | C | 65, 66, 67, 68, 69 | | |
| | | | | C | 70, 71, 73, 74, 75 | | |
| | | | | C | 76, 59 | | |
| 76 | 1 | 128533-680 | RES, CF, 68, 5%, 1/4W | R | 42 | | |
| 77 | 1 | 128533-470 | RES, CF, 47, 5%, 1/4 W | R | 15 | | |
| 78 | 2 | 128533-271 | RES, CF, 270, 5%, 1/4W | R | 28, 37 | | |
| 79 | 2 | 128533-751 | RES, CF, 750, 5%, 1/4 W | R | 13, 14 | | |
| 80 | 7 | 128533-102 | RES, CF, 1K, 5%, 1/4W | R | 16, 18, 19, 20, 21 | | |
| | | | | R | 27, 57 | | |
| 81 | 5 | 128533-472 | RES, CF, 4.7K, 5%, 1/4W | R | 23, 24, 50, 51, 52 | | |
| 82 | 1 | 128533-183 | RES, CF, 18 K, 5%, 1/4 W | R | 9 | | |
| 83 | 1 | 128533-223 | RES, CF, 22K, 5%, 1/4 W | R | 25 | | |
| 84 | 1 | 128533-681 | RES, CF, 680, 5%, 1/4 W | R | 17 | | |
| 85 | 1 | 128533-393 | RES, CF, 39 K, 5%, 1/4 W | R | 10 | | |
| 86 | 1 | 128533-303 | RES, CF, 30K, 5%, 1/4W | R | 11 | | |
| 87 | 3 | 128533-103 | RES, CF, 10K, 5%, 1/4W | R | 26, 36, 39 | | |
| 88 | 2 | 128533-473 | RES, CF, 47 K, 5%, 1/4 W | R | 22, 29 | | |
| 89 | 4 | 128533-563 | RES, CF, 56 K, 5%, 1/4 W | R | 31, 32, 33, 34 | | |
| 90 | 1 | 128533-682 | RES, CF, 6.8 K, 5%, 1/4 W | R | 35 | | |
| 91 | 2 | 128533-121 | RES, CF, 120, 5%, 1/4 W | R | 38, 40 | | |
| 92 | 2 | 128533-471 | RES, CF, 470, 5%, 1/4 W | R | 1, 7 | | |
| 93 | 2 | 128533-151 | RES, CF, 150, 5%, 1/4 W | R | 3, 54 | | |
| 94 | 1 | 128533-181 | RES, CF, 180, 5%, 1/4W | R | 2 | | |
| 95 | 1 | 128533-392 | RES, CF, 3.9 K, 5%, 1/4 W | R | 6 | | |
| 96 | 2 | 128533-683 | RES, CF, 68 K, 5%, 1/4 W | R | 4, 5 | | |
| 97 | 1 | 128533-222 | RES, CF, 2.2 K, 5%, 1/4 W | R | 55 | | |
| 98 | 1 | 819040 | RES NTWK, DIP, 10 K, 15 R | R | 43 | | |
| 99 | 1 | 819078 | RES NTWK, DIP, 4.7 K, 15 R | R | 30 | | |
| 100 | 1 | 819074 | RES NTWK, DIP, 1 K, 8 R | R | 12 | | |
| 101 | 2 | 810001 | TSTR, 2N3904 | Q | 1, 2 | | |
| 102 | 1 | 810003 | TSTR, 2N3906 | Q | 3 | | |

PARTSLIST :PL132770 PC BOARD ASSY, LOGIC, ADM 36 REV :T

ASSY :-003

12/06/82 PAGE 9

| F/N | QTY | PART NO. | DESCRIPTION | TYPE | NOTES | C1 | C2 |
|---|---|---|---|---|---|---|---|
| 103 | 1 | 810036 | TSTR, 2N2222 | Q | 4 | | |
| 104 | 1 | 810022 | TSTR, 2N2907A | Q | 5 | | |
| 106 | 11 | 808042 | DIODE FASTSW 1N914B/1N4448 | CR | 1,2,3,4,5,6,7,8 | | |
| | | | | CR | 9,17,18 | | |
| 108 | 1 | 802030 | SOCKET, DIP, 14 PIN | XU | 16 | | |
| 109 | 4 | 802033 | DIP SOCKT 24P LOPROF TINPL | XU | 67,69,82,84 | | |
| 110 | 8 | 802036 | SOCKET, DIP, 28 PIN | XU | 71,72,73,74,75 | | |
| | | | | XU | 76,56,3 | | |
| 111 | 4 | 802034 | DIP SOCKT 40P LOPROF TINPL | UX | 4,29,37,38 | | |
| 113 | 9 | 809293 | HEADER, 4 PIN, 2X2, 025 SQ | E | 2,4,5,6,7,8,9 | | |
| | | | | E | 10,11 | | |
| 114 | 1 | 809294 | HEADER, 18 PIN, 2X9, 025SQ | E | 3 | | |
| 115 | 1 | 809295 | HEADER, 16 PIN, 2X8, 025SQ | E | 1 | | |
| 116 | 1 | 809181 | HDR 9-PIN PCBMT 0.025" SQ | J | 1 | | |
| 117 | 2 | 809300 | CONN 25P RCPT DSUB RTANGL | J | 2,3 | | |
| 118 | 1 | 809292 | CONN, 4 PIN,616 TEL HD SET | J | 4 | | |
| 119 | 1 | 809220 | HDR 10-PIN PCBMTG 0.025"SQ | J | 5 | | |
| 120 | 22 | 809296 | JACK, 2 PIN SHORTING | | | | |
| 122 | 6 | 824002 | RIVET SEMITUBULR 1/8Dx7/32 | | FOR J2 & 3 | | |
| 127 | 1 | 132873-002 | IC EPROM ADM36 CHAR GEN | U | 56 | | |
| 128 | 1 | 132793-002 | IC, TYPE Am26LS32PC | U | 85 | | |
| 129 | 1 | 132793-001 | IC, TYPE Am26LS31PC | U | 86 | | |
| 130 | 0 | 136231-001 | WIRE, JUMPER | | FOR R53 | | |
| 131 | 0 | 132772 | SCHEMATIC, ADM 36 | | | | |

********** END OF LIST **********

PARTSLIST :PL132770 PC BOARD ASSY, LOGIC, ADM 36 REV :T

ASSY :-004

12/06/82 PAGE 10

| F/N | QTY | PART NO. | DESCRIPTION | TYPE | NOTES | C1 | C2 |
|---|---|---|---|---|---|---|---|
| 2 | 1 | 131671-017 | PGMD 2732 ADM36I V1.1 2000 | U | 72 | | |
| 3 | 1 | 136261-017 | PGMD 2764 ADM36-I V1.10 | U | 71 | | |
| 7 | 1 | 132771-005 | PWB, ADM 36 LOGIC | | | | |
| 9 | 2 | 129467-02 | IC, TYPE 74LS02 | U | 33,51 | | |
| 10 | 1 | 129467-08 | IC, TYPE 74LS08 | U | 54 | | |
| 11 | 2 | 129467-14 | IC, TYPE 74LS14 | U | 17,32 | | |
| 12 | 1 | 129467-27 | IC, TYPE 74LS27 | U | 55 | | |
| 13 | 2 | 129467-32 | IC, TYPE 74LS32 | U | 26,53 | | |
| 14 | 2 | 129467-138 | IC, TYPE 74LS138 | U | 27,58 | | |
| 15 | 2 | 129467-139 | IC, TYPE 74LS139 | U | 52,78 | | |
| 16 | 1 | 129467-109 | IC, TYPE 74LS109 | U | 24 | | |
| 17 | 4 | 129467-158 | IC, TYPE 74LS158 | U | 39,45,59,77 | | |
| 18 | 1 | 129467-166 | IC, TYPE 74LS166 | U | 47 | | |
| 19 | 1 | 129467-175 | IC, TYPE 74LS175 | U | 44 | | |
| 20 | 2 | 129467-191 | IC, TYPE 74LS191 | U | 48,63 | | |
| 21 | 2 | 129467-244 | IC, TYPE 74LS244 | U | 64,80 | | |
| 22 | 1 | 129467-245 | IC, TYPE 74LS245 | U | 60 | | |
| 23 | 5 | 129467-273 | IC, TYPE 74LS273 | U | 28,57,61,62,70 | | |
| 24 | 2 | 129467-283 | IC, TYPE 74LS283 | U | 49,50 | | |
| 25 | 2 | 129467-374 | IC, TYPE 74LS374 | U | 65,79 | | |
| 26 | 1 | 129467-377 | IC, TYPE 74LS377 | U | 22 | | |
| 27 | 1 | 129467-390 | IC, TYPE 74LS390 | U | 18 | | |
| 28 | 1 | 129467-113 | IC, TYPE 74LS113 | U | 40 | | |
| 29 | 1 | 129467-157 | IC, TYPE 74LS157 | U | 87 | | |
| 30 | 3 | 129826-00 | IC, TYPE 74S00 | U | 9,12,20 | | |
| 31 | 1 | 129826-04 | IC, TYPE 74S04 | U | 11 | | |
| 32 | 1 | 129826-38 | IC, TYPE 74S38 | U | 42 | | |
| 33 | 1 | 129826-74 | IC, TYPE 74S74 | U | 10 | | |
| 34 | 1 | 129826-86 | IC, TYPE 74S86 | U | 23 | | |
| 35 | 3 | 129826-113 | IC, TYPE 74S113 | U | 34,35,46 | | |
| 36 | 1 | 129826-161 | IC, TYPE 74S161 | U | 19 | | |
| 37 | 1 | 129826-174 | IC, TYPE 74S174 | U | 14 | | |
| 38 | 1 | 129826-175 | IC, TYPE 74S175 | U | 13 | | |
| 39 | 2 | 128348-06 | IC, TYPE 7406 | U | 15,25 | | |
| 40 | 1 | 128348-26 | IC, TYPE 7426 | U | 21 | | |
| 41 | 1 | 128348-92 | IC, TYPE 7492 | U | 31 | | |
| 42 | 2 | 128348-1488 | IC, RS232 DRVR, TYPE 1488 | U | 5,7 | | |
| 43 | 2 | 128348-1489 | IC, RS232 RCVR, TYPE 1489 | U | 6,8 | | |
| 45 | 1 | 136038-001 | IC, EAROM, 100X14, ER1400 | U | 16 | | |
| 46 | 1 | 128348-741 | IC, DUAL OP-AMP, TYPE 741 | U | 30 | | |
| 47 | 1 | 128348-1458 | IC, DUAL OP-AMP, TYPE 1458 | U | 36 | | |
| 48 | 2 | 132616-001 | OPTOCOUPLER, LOW-GAIN 4N35 | U | 1,2 | | |
| 49 | 1 | 129762-4 | OSC, 14.728 MHZ | U | 43 | | |
| 50 | 1 | 129762-5 | OSC, 24.300 MHZ | U | 41 | | |
| 51 | 1 | 128348-5037 | IC, VTAC, TYPE 5037 | U | 38 | | |
| 52 | 1 | 132868-001 | IC, CPU, Z80 | U | 37 | | |
| 53 | 1 | 132868-002 | IC, PIO, 3881 | U | 29 | | |
| 54 | 1 | 132868-003 | IC, CTC, 3882 | U | 3 | | |
| 55 | 1 | 132868-004 | IC, SIO, 3887 | U | 4 | | |
| 56 | 4 | 129466-4802 | IC 2Kx8 STATIC RAM 120 nS | U | 67,69,82,84 | | |

PARTSLIST :PL132770 PC BOARD ASSY, LOGIC, ADM 36 REV :T

ASSY :-004

12/06/82 PAGE 11

| F/N | QTY | PART NO. | DESCRIPTION | TYPE | NOTES | C1 | C2 |
|---|---|---|---|---|---|---|---|
| 57 | 1 | 132869-004 | IC, RAM, 1KX8, 250 NS, 4118 | U | 76 | | |
| 65 | 2 | 805075 | CAP, 1 UF, MONO | C | 38, 41 | | |
| 66 | 7 | 805056 | CAP 15UF 20V TANT | C | 1, 2, 3, 53, 64, 72 | | |
| | | | | C | 77 | | |
| 67 | 1 | 128518-1000 | CAP, 1000 PF, 1%, MICA | C | 22 | | |
| 68 | 2 | 805076 | CAP, 2.2 UF, MONO | C | 39, 42 | | |
| 69 | 3 | 132617-106 | CAP 10UF 35V AL ELECT RAD | C | 30, 33, 46 | | |
| 70 | 1 | 128518-101 | CAP, 100 PF, 5%, MICA | C | 55 | | |
| 71 | 1 | 51001274-068 | CAP, 47 UF, | C | 32 | | |
| 72 | 7 | 805074 | CAP, 390 PF, MONO | C | 8, 9, 10, 11, 12, 13 | | |
| | | | | C | 14 | | |
| 73 | 53 | 805046 | CAP 0.1UF 50V MONOLITH DIP | C | 4, 5, 6, 7, 15, 16 | | |
| | | | | C | 17, 18, 19, 20, 21 | | |
| | | | | C | 23, 24, 25, 26, 27 | | |
| | | | | C | 28, 29, 31, 34, 35 | | |
| | | | | C | 36, 37, 40, 43, 44 | | |
| | | | | C | 45, 47, 48, 49, 50 | | |
| | | | | C | 51, 52, 54, 56, 57 | | |
| | | | | C | 58, 60, 61, 62, 63 | | |
| | | | | C | 65, 66, 67, 68, 69 | | |
| | | | | C | 70, 71, 73, 74, 75 | | |
| | | | | C | 76, 59 | | |
| 76 | 1 | 128533-680 | RES, CF, 68, 5%, 1/4W | R | 42 | | |
| 77 | 1 | 128533-470 | RES, CF, 47, 5%, 1/4 W | R | 15 | | |
| 78 | 2 | 128533-271 | RES, CF, 270, 5%, 1/4W | R | 28, 37 | | |
| 79 | 2 | 128533-751 | RES, CF, 750, 5%, 1/4 W | R | 13, 14 | | |
| 80 | 7 | 128533-102 | RES, CF, 1K, 5%, 1/4W | R | 16, 18, 19, 20, 21 | | |
| | | | | R | 27, 57 | | |
| 81 | 5 | 128533-472 | RES, CF, 4.7K, 5%, 1/4W | R | 23, 24, 50, 51, 52 | | |
| 82 | 1 | 128533-183 | RES, CF, 18 K, 5%, 1/4 W | R | 9 | | |
| 83 | 1 | 128533-223 | RES, CF, 22K, 5%, 1/4 W | R | 25 | | |
| 84 | 1 | 128533-681 | RES, CF, 680, 5%, 1/4 W | R | 17 | | |
| 85 | 1 | 128533-393 | RES, CF, 39 K, 5%, 1/4 W | R | 10 | | |
| 86 | 1 | 128533-303 | RES, CF, 30K, 5%, 1/4W | R | 11 | | |
| 87 | 3 | 128533-103 | RES, CF, 10K, 5%, 1/4W | R | 26, 36, 39 | | |
| 88 | 2 | 128533-473 | RES, CF, 47 K, 5%, 1/4 W | R | 22, 29 | | |
| 89 | 4 | 128533-563 | RES, CF, 56 K, 5%, 1/4 W | R | 31, 32, 33, 34 | | |
| 90 | 1 | 128533-682 | RES, CF, 6.8 K, 5%, 1/4 W | R | 35 | | |
| 91 | 2 | 128533-121 | RES, CF, 120, 5%, 1/4 W | R | 38, 40 | | |
| 92 | 2 | 128533-471 | RES, CF, 470, 5%, 1/4 W | R | 1, 7 | | |
| 93 | 2 | 128533-151 | RES, CF, 150, 5%, 1/4 W | R | 3, 54 | | |
| 94 | 1 | 128533-181 | RES, CF, 180, 5%, 1/4W | R | 2 | | |
| 95 | 1 | 128533-392 | RES, CF, 3.9 K, 5%, 1/4 W | R | 6 | | |
| 96 | 2 | 128533-683 | RES, CF, 68 K, 5%, 1/4 W | R | 4, 5 | | |
| 97 | 1 | 128533-222 | RES, CF, 2.2 K, 5%, 1/4 W | R | 55 | | |
| 98 | 1 | 819040 | RES NTWK, DIP, 10 K, 15 R | R | 43 | | |
| 99 | 1 | 819078 | RES NTWK, DIP, 4.7 K, 15 R | R | 30 | | |
| 100 | 1 | 819074 | RES NTWK, DIP, 1 K, 8 R | R | 12 | | |
| 101 | 2 | 810001 | TSTR, 2N3904 | Q | 1, 2 | | |
| 102 | 1 | 810003 | TSTR, 2N3906 | Q | 3 | | |

PARTSLIST :PL132770 PC BOARD ASSY, LOGIC, ADM 36 REV :T

ASSY :-004

12/06/82 PAGE 12

| F/N | QTY | PART NO. | DESCRIPTION | TYPE | NOTES | C1 | C2 |
|---|---|---|---|---|---|---|---|
| 103 | 1 | 810036 | TSTR, 2N2222 | Q | 4 | | |
| 104 | 1 | 810022 | TSTR, 2N2907A | Q | 5 | | |
| 106 | 11 | 808042 | DIODE FASTSW 1N914B/1N4448 | CR | 1, 2, 3, 4, 5, 6, 7, 8 | | |
| | | | | CR | 9, 17, 18 | | |
| 108 | 1 | 802030 | SOCKET, DIP, 14 PIN | XU | 16 | | |
| 109 | 4 | 802033 | DIP SOCKT 24P LOPROF TINPL | XU | 67, 69, 82, 84 | | |
| 110 | 8 | 802036 | SOCKET, DIP, 28 PIN | XU | 71, 72, 73, 74, 75 | | |
| | | | | XU | 76, 56, 3 | | |
| 111 | 4 | 802034 | DIP SOCKT 40P LOPROF TINPL | UX | 4, 29, 37, 38 | | |
| 113 | 9 | 809293 | HEADER, 4 PIN, 2X2, 025 SQ | E | 2, 4, 5, 6, 7, 8, 9 | | |
| | | | | E | 10, 11 | | |
| 114 | 1 | 809294 | HEADER, 18 PIN, 2X9, 025SQ | E | 3 | | |
| 115 | 1 | 809295 | HEADER, 16 PIN, 2X8, 025SQ | E | 1 | | |
| 116 | 1 | 809181 | HDR 9-PIN PCBMT 0.025" SQ | J | 1 | | |
| 117 | 2 | 809300 | CONN 25P RCPT DSUB RTANGL | J | 2, 3 | | |
| 118 | 1 | 809292 | CONN, 4 PIN, 616 TEL HD SET | J | 4 | | |
| 119 | 1 | 809220 | HDR 10-PIN PCBMTG 0.025"SQ | J | 5 | | |
| 120 | 22 | 809296 | JACK, 2 PIN SHORTING | | | | |
| 122 | 6 | 824002 | RIVET SEMITUBULR 1/8Dx7/32 | | FOR J2 & 3 | | |
| 127 | 1 | 132873-002 | IC EPROM ADM36 CHAR GEN | U | 56 | | |
| 128 | 1 | 132793-002 | IC, TYPE Am26LS32PC | U | 85 | | |
| 129 | 1 | 132793-001 | IC, TYPE Am26LS31PC | U | 86 | | |
| 130 | 0 | 136231-001 | WIRE, JUMPER | | FOR R53 | | |
| 131 | 0 | 132772 | SCHEMATIC, ADM 36 | | | | |
| 133 | 1 | 136261-004 | EPROM IC 2764 PROG 0000 | U | 71 | | |
| 134 | 1 | 131671-009 | EPROM IC 2732 PROG 2000 | U | 72 | | |
| 135 | 1 | 129466-4802 | IC 2Kx8 STATIC RAM 120 nS | U | 75 | | |

********** END OF LIST **********

# REVISION HISTORY

PARTSLIST : PL132770 REV : T

12/06/82 PAGE 13

**********

REV : X1 DCN : 3082 ASSY : ALL AUTH : KLK DATE : 02/05/82

| F/N | PART NO. | TYPE | NOTES | C1 | C2 |
|---|---|---|---|---|---|
| 0 | | | REV CHANGE | | |

REV : X2 DCN : 3126 ASSY : ALL AUTH : KLK DATE : 02/05/82

| F/N | PART NO. | TYPE | NOTES | C1 | C2 |
|---|---|---|---|---|---|
| 0 | | | REV CHANGE | | |

REV : X3 DCN : 3151 ASSY : ALL AUTH : KLK DATE : 02/05/82

| F/N | PART NO. | TYPE | NOTES | C1 | C2 |
|---|---|---|---|---|---|
| 0 | | | REV CHANGE | | |

REV : X4 DCN : 3287 ASSY : ALL AUTH : KLK DATE : 02/05/82

| F/N | PART NO. | TYPE | NOTES | C1 | C2 |
|---|---|---|---|---|---|
| 0 | | | REV CHANGE | | |

REV : X5 DCN : 3200 ASSY : ALL AUTH : KLK DATE : 02/05/82

| F/N | PART NO. | TYPE | NOTES | C1 | C2 |
|---|---|---|---|---|---|
| 0 | | | REV CHANGE | | |

REV : X6 DCN : 3378 ASSY : ALL AUTH : KLK DATE : 02/05/82

| F/N | PART NO. | TYPE | NOTES | C1 | C2 |
|---|---|---|---|---|---|
| 0 | | | REV CHANGE | | |

REV : A DCN : 3402 ASSY : ALL AUTH : KLK DATE : 02/15/82

| F/N | PART NO. | TYPE | NOTES | C1 | C2 |
|---|---|---|---|---|---|
| 60 | 129827-186 | U | | | |
| 61 | 129827-187 | U | | | |
| 62 | 129827-188 | U | | | |
| 63 | 129827-189 | U | | | |
| 64 | 129827-190 | U | | | |
| 127 | 136131-001 | U | | | |

REV : A DCN : 3402 ASSY : -003 AUTH : KLK DATE : 02/15/82

| F/N | PART NO. | QTY | TYPE | REF DES/NOTES | ACTION |
|---|---|---|---|---|---|
| 121 | 129473-3 | 4 | | FOR J2 & 3 | QTY/RD CHG |
| 122 | 824010 | 4 | | FOR J2 & 3 | QTY/RD CHG |

REV : A DCN : 3402 ASSY : ALL AUTH : KLK DATE : 02/15/82

| F/N | PART NO. | TYPE | NOTES | C1 | C2 |
|---|---|---|---|---|---|
| 121 | 129473-3 | | FOR J2 & 3 | | |

# REVISION HISTORY

PARTSLIST : PL132770 REV : T



**********

REV : B DCN : 3279 ASSY : -001 AUTH : KLK DATE : 10/11/82

| F/N | PART NO. | QTY | TYPE | REF DES/NOTES | ACTION |
|---|---|---|---|---|---|
| 121 | 129473-3 | 4 | | FOR J2, 3, 8 | F/N DELETED |

REV : B DCN : 3279 ASSY : -002 AUTH : KLK DATE : 10/11/82

| F/N | PART NO. | QTY | TYPE | REF DES/NOTES | ACTION |
|---|---|---|---|---|---|
| 121 | 129473-3 | 4 | | FOR J2, 3, 8 | F/N DELETED |

REV : B DCN : 3279 ASSY : -003 AUTH : KLK DATE : 10/11/82

| F/N | PART NO. | QTY | TYPE | REF DES/NOTES | ACTION |
|---|---|---|---|---|---|
| 121 | 129473-3 | 6 | | FOR J2, 3, 8 | F/N DELETED |

REV : B DCN : 3279 ASSY : ALL AUTH : KLK DATE : 10/11/82

| F/N | PART NO. | TYPE | NOTES | C1 | C2 |
|---|---|---|---|---|---|
| 117 | 809017 | J | | | |

REV : C DCN : 3488 ASSY : -002 AUTH : KLK DATE : 10/11/82

| F/N | PART NO. | QTY | TYPE | REF DES/NOTES | ACTION |
|---|---|---|---|---|---|
| 56 | 129466-4802 | 4 | U | 66, 67, 68, 69 | QTY/RD CHG |
| 109 | 802033 | 4 | XU | 66, 67, 68, 69 | QTY/RD CHG |

REV : C DCN : 3488 ASSY : -003 AUTH : KLK DATE : 10/11/82

| F/N | PART NO. | QTY | TYPE | REF DES/NOTES | ACTION |
|---|---|---|---|---|---|
| 56 | 129466-4802 | 4 | U | 66, 67, 68, 69 | QTY/RD CHG |
| 109 | 802033 | 4 | XU | 66, 67, 68, 69 | QTY/RD CHG |

REV : D DCN : 3507 ASSY : ALL AUTH : KLK DATE : 10/11/82

| F/N | PART NO. | TYPE | NOTES | C1 | C2 |
|---|---|---|---|---|---|
| 122 | 824010 | | FOR J2 & 3 | | |

REV : E DCN : 3542 ASSY : -003 AUTH : KLK DATE : 10/11/82

| F/N | PART NO. | QTY | TYPE | REF DES/NOTES | ACTION |
|---|---|---|---|---|---|
| 124 | 809305 | 1 | J | 7 | F/N DELETED |
| 125 | 809309 | 1 | J | 8 | F/N DELETED |

REV : F DCN : 3571 ASSY : ALL AUTH : KLK DATE : 10/11/82

| F/N | PART NO. | TYPE | NOTES | C1 | C2 |
|---|---|---|---|---|---|
| 60 | 129827-195 | U | | | |
| 61 | 129827-196 | U | | | |
| 62 | 129827-197 | U | | | |

## REVISION HISTORY

PARTSLIST : PL132770 REV : T



**********

| F/N | PART NO. | QTY | TYPE | REF DES/NOTES | ACTION |
|---|---|---|---|---|---|
| 63 | 129827-198 | | U | | |
| 64 | 129827-199 | | U | | |

REV : F DCN : 3571 ASSY : -001 AUTH : KLK DATE : 10/11/82

| F/N | PART NO. | QTY | TYPE | REF DES/NOTES | ACTION |
|---|---|---|---|---|---|
| 92 | 128533-471 | 3 | R | 1,7,41 | QTY/RD CHG |
| 93 | 128533-151 | 1 | R | 3 | QTY/RD CHG |
| 97 | | | | | F/N ADDED |

REV : F DCN : 3571 ASSY : -002 AUTH : KLK DATE : 10/11/82

| F/N | PART NO. | QTY | TYPE | REF DES/NOTES | ACTION |
|---|---|---|---|---|---|
| 92 | 128533-471 | 3 | R | 1,7,41 | QTY/RD CHG |
| 93 | 128533-151 | 1 | R | 3 | QTY/RD CHG |
| 97 | | | | | F/N ADDED |

REV : F DCN : 3571 ASSY : -003 AUTH : KLK DATE : 10/11/82

| F/N | PART NO. | QTY | TYPE | REF DES/NOTES | ACTION |
|---|---|---|---|---|---|
| 92 | 128533-471 | 3 | R | 1,7,41 | QTY/RD CHG |
| 93 | 128533-151 | 1 | R | 3 | QTY/RD CHG |
| 97 | | | | | F/N ADDED |

REV : G DCN : 3621 ASSY : ALL AUTH : KLK DATE : 10/11/82

| F/N | PART NO. | TYPE | NOTES | C1 | C2 |
|---|---|---|---|---|---|
| 130 | 812084 | | FOR R53 (.8LG) | | |

REV : J DCN : 3924 ASSY : ALL AUTH : KLK DATE : 10/11/82

| F/N | PART NO. | TYPE | NOTES | C1 | C2 |
|---|---|---|---|---|---|
| 60 | 129827-213 | U | | | |
| 61 | 129827-214 | U | | | |
| 62 | 129827-215 | U | | | |
| 63 | 129827-216 | U | | | |
| 64 | 129827-217 | U | | | |

REV : K DCN : 3928 ASSY : -001 AUTH : KLK DATE : 10/11/82

| F/N | PART NO. | QTY | TYPE | REF DES/NOTES | ACTION |
|---|---|---|---|---|---|
| 80 | 128533-102 | 6 | R | 16,18,19,20,21 | QTY/RD CHG |
| | | | R | 27 | |

REV : K DCN : 3928 ASSY : -002 AUTH : KLK DATE : 10/11/82

| F/N | PART NO. | QTY | TYPE | REF DES/NOTES | ACTION |
|---|---|---|---|---|---|
| 80 | 128533-102 | 6 | R | 16,18,19,20,21 | QTY/RD CHG |
| | | | R | 27 | |

REV : K DCN : 3928 ASSY : -003 AUTH : KLK DATE : 10/11/82

| F/N | PART NO. | QTY | TYPE | REF DES/NOTES | ACTION |
|---|---|---|---|---|---|
| 80 | 128533-102 | 6 | R | 16,18,19,20,21 | QTY/RD CHG |

## REVISION HISTORY

PARTSLIST : PL132770 REV : T

12/06/82 PAGE 16

**********

80 128533-102 6 R 27 QTY/RD CHG

REV : L DCN : 3974 ASSY : -001 AUTH : KLK DATE : 10/11/82

| F/N | PART NO. | QTY | TYPE | REF DES/NOTES | ACTION |
|---|---|---|---|---|---|
| 106 | 808042 | 9 | CR | 1, 2, 3, 4, 5, 6, 7, 8 | QTY/RD CHG |
| | | | CR | 9 | |

REV : L DCN : 3974 ASSY : -002 AUTH : KLK DATE : 10/11/82

| F/N | PART NO. | QTY | TYPE | REF DES/NOTES | ACTION |
|---|---|---|---|---|---|
| 106 | 808042 | 9 | CR | 1, 2, 3, 4, 5, 6, 7, 8 | QTY/RD CHG |
| | | | CR | 9 | |

REV : L DCN : 3974 ASSY : -003 AUTH : KLK DATE : 10/11/82

| F/N | PART NO. | QTY | TYPE | REF DES/NOTES | ACTION |
|---|---|---|---|---|---|
| 106 | 808042 | 9 | CR | 1, 2, 3, 4, 5, 6, 7, 8 | QTY/RD CHG |
| | | | CR | 9 | |

REV : H DCN : 3645 ASSY : ALL AUTH : KLK DATE : 10/11/82

| F/N | PART NO. | TYPE | NOTES | C1 | C2 |
|---|---|---|---|---|---|
| 0 | | | REV CHANGE | | |

REV : M DCN : 4195 ASSY : -001 AUTH : KLK DATE : 10/15/82

| F/N | PART NO. | QTY | TYPE | REF DES/NOTES | ACTION |
|---|---|---|---|---|---|
| 80 | 128533-102 | 7 | R | 16, 18, 19, 20, 21 | QTY/RD CHG |
| | | | R | 27, 53 | |

REV : M DCN : 4195 ASSY : -002 AUTH : KLK DATE : 10/15/82

| F/N | PART NO. | QTY | TYPE | REF DES/NOTES | ACTION |
|---|---|---|---|---|---|
| 80 | 128533-102 | 7 | R | 16, 18, 19, 20, 21 | QTY/RD CHG |
| | | | R | 27, 53 | |

REV : M DCN : 4195 ASSY : -003 AUTH : KLK DATE : 10/15/82

| F/N | PART NO. | QTY | TYPE | REF DES/NOTES | ACTION |
|---|---|---|---|---|---|
| 80 | 128533-102 | 7 | R | 16, 18, 19, 20, 21 | QTY/RD CHG |
| | | | R | 27, 53 | |

REV : L DCN : 4161 ASSY : ALL AUTH : KLK DATE : 11/30/82

| F/N | PART NO. | TYPE | NOTES | C1 | C2 |
|---|---|---|---|---|---|
| 0 | | | DEVIATION | | |

REV : N DCN : 4238 ASSY : -003 AUTH : KLK DATE : 11/30/82

| F/N | PART NO. | QTY | TYPE | REF DES/NOTES | ACTION |
|---|---|---|---|---|---|
| 80 | 128533-102 | 7 | R | 16, 18, 19, 20, 21 | QTY/RD CHG |

## REVISION HISTORY

PARTS LIST : PL132770 REV : T

12/06/82 PAGE 17

| F/N | PART NO. | QTY | TYPE | REF DES/NOTES | ACTION |
|---|---|---|---|---|---|
| 80 | 128533-102 | 7 | R | 27,56 | QTY/RD CHG |

REV : P DCN : 4171 ASSY : -004 AUTH : KLK DATE : 11/30/82

| F/N | PART NO. | QTY | TYPE | REF DES/NOTES | ACTION |
|---|---|---|---|---|---|
| 0 | | | | | ASSY ADDED |

REV : N DCN : 4238 ASSY : -004 AUTH : KLK DATE : 11/30/82

| F/N | PART NO. | QTY | TYPE | REF DES/NOTES | ACTION |
|---|---|---|---|---|---|
| 80 | 128533-102 | 7 | R | 16,18,19,20,21 | QTY/RD CHG |
| | | | R | 27,57 | |

REV : R DCN : 4306 ASSY : -003 AUTH : KLK DATE : 11/30/82

| F/N | PART NO. | QTY | TYPE | REF DES/NOTES | ACTION |
|---|---|---|---|---|---|
| 87 | 128533-103 | 4 | R | 8,26,36,39 | QTY/RD CHG |

REV : R DCN : 4306 ASSY : -004 AUTH : KLK DATE : 11/30/82

| F/N | PART NO. | QTY | TYPE | REF DES/NOTES | ACTION |
|---|---|---|---|---|---|
| 87 | 128533-103 | 4 | R | 8,26,36,39 | QTY/RD CHG |

REV : S DCN : 4303 ASSY : -003 AUTH : KLK DATE : 11/30/82

| F/N | PART NO. | QTY | TYPE | REF DES/NOTES | ACTION |
|---|---|---|---|---|---|
| 57 | 132869-004 | 1 | U | 76 | F/N DELETED |
| 60 | 129827-220 | 1 | U | 71 | F/N DELETED |
| 61 | 129827-221 | 1 | U | 72 | F/N DELETED |
| 62 | 129827-222 | 1 | U | 73 | F/N DELETED |
| 63 | 129827-223 | 1 | U | 74 | F/N DELETED |
| 64 | 129827-224 | 1 | U | 75 | F/N DELETED |

REV : S DCN : 4303 ASSY : -003 AUTH : KLK DATE : 12/03/82

| F/N | PART NO. | QTY | TYPE | REF DES/NOTES | ACTION |
|---|---|---|---|---|---|
| 4 | | | | | F/N ADDED |
| 5 | | | | | F/N ADDED |
| 8 | | | | | F/N ADDED |

REV : T DCN : 4302 ASSY : -004 AUTH : KLK DATE : 12/06/82

| F/N | PART NO. | QTY | TYPE | REF DES/NOTES | ACTION |
|---|---|---|---|---|---|
| 2 | | | | | F/N ADDED |
| 3 | | | | | F/N ADDED |

********** END OF LIST **********

## /129881 Parts List, Switching Power Supply Assembly, 115/230 VAC (Motorola)

| PART NUMBER | DESCRIPTION | REFERENCE DESIGNATION | QTY |
|---|---|---|---|
| 129881-5 | Switching Power Supply Assembly, 115 VAC (Motorola) (132600-003) | | REF |
| 129881-6 | Switching Power Supply Assembly, 230 VAC (Motorola) (132600-004) | | REF |
| 132612-002 | Inductor Assembly | L3 | 1 |
| 132612-003 | Inductor Assembly | L4,5 | 2 |
| 132611-036 | Inductor Assembly | L1 | 1 |
| 132611-041 | Inductor Assembly | L2 | 1 |
| 132610-001 | Balun Assembly | T1 | 1 |
| 132605-001 | Transformer Assembly | T2 | 1 |
| 822619 | PEM Nut, #6-32 | (8) | 2 |
| 822011 | PEM Nut, #10-32 | (9) | 1 |
| 822405 | Nut, #4-40 (With Lock Washer) | (10) | 3 |
| 821407 | Screw, #4-40 x .250 | (11) | 3 |
| 821602 | Screw, #6-32 x .375 | (12) | 2 |
| 128538-274 | Resistor, 270K ±5%, 1/2W | R1,40 | 2 |
| 128538-753 | Resistor, 75K ±5%, 1/2W | R2,3 | 2 |
| 128533-101 | Resistor, 100 Ohms ±5%, 1/4W | R21,25 | 2 |
| 128533-102 | Resistor, 1K ±5%, 1/4W | R7,8,9,37 | 4 |
| 128533-104 | Resistor, 100K ±5%, 1/4W | R11,12 | 2 |
| 128533-103 | Resistor, 10K ±5%, 1/4W | R42 | 1 |
| 128533-182 | Resistor, 1.8K ±5%, 1/4W | R13 | 1 |
| 128533-220 | Resistor, 22 Ohms ±5%, 1/4W | R26 | 1 |
| 128533-271 | Resistor, 270 Ohms ±5%, 1/4W | R10 | 1 |

* = USED ON 230V ONLY

POWER SUPPLY 129881 SHEET 1 OF 6

## Parts List, Switching Power Supply Assembly 115/230 VAC (Motorola) (cont'd)

| *PART NUMBER* | *DESCRIPTION* | *REFERENCE DESIGNATION* | *QTY* |
|---|---|---|---|
| 128533-332 | Resistor, 3.3K±5%, 1/4W | R20,24 | 2 |
| 128533-472 | Resistor, 4.7K±5%, 1/4W | R15,22,43 | 3 |
| 128533-241 | Resistor, 240 ohm 5% 1/4 W | R14 | 1 |
| 128533-150 | Resistor, 15 Ohm±5%, 1/4W | R4 | 1 |
| 128533-752 | Resistor, 7.5K±5%, 1/4W | R16 | 1 |
| 128533-821 | Resistor, 820 Ohm±5%,, 1/4W | R6 | 1 |
| 128533-823 | Resistor, 82K±5%, 1/4W | R17 | 1 |
| 128539-201 | Resistor, 200 Ohm±5%, 1W | R35 | 1 |
| 801037 | Potentiometer, 1K | R23 | 1 |
| 803094 | Resistor, 2.21K±5%, 1/4W | R41 | 1 |
| 803093 | Resistor, .33 Ohm±5%, 2W | R5 | 1 |
| 132615-001 | Surge Limiter, 25 Ohm | TR1 | 1 |
| 820016 | Compound, Heatsink | (34) | A/R |
| 839052 | Insulator, Shoulder Washer, #6 | (35) | 2 |
| 839053 | Insulator, Mica, TO-3 | (36) | 1 |
| 132617-107 | Capacitor, 100 MFD, 25V | C21,26 | 2 |
| 132622-471 | Capacitor, 470 MFD, 50V | C10 | 1 |
| 132623-102 | Capacitor, .001 MFD, 1KV | C13,18,19 C27-29 (C32,33*) | 6(8*) |
| 132623-681 | Capacitor, Ceramic, 680 PFD, 50V | C8 | 1 |
| 132621-472 | Capacitor, Ceramic, UL/CSA, .0047 MFD | C1 | 1 |
| 132618-105 | Capacitor, Electrolytic, 1 MFD, 50V | C6,12,15,25 | 4 |
| 132618-476 | Capacitor, Electrolytic, 47 MFD, 50V | C14 | 1 |

*Used on 129881-6 (230 VAC) only

## /29881 Parts List, Switching Power Supply Assembly, 115/230 VAC (Motorola) (cont'd)

| PART NUMBER | DESCRIPTION | REFERENCE DESIGNATION | QTY |
|---|---|---|---|
| 132619-228 | Capacitor, Electrolytic, 2200 MFD, 10V | C16,22 | 2 |
| 132620-107 | Capacitor, Electrolytic, 100 MFD, 200V | C2,3 | 2 |
| 128518-226 | Capacitor, Tantalum, 22 MFD±5%, 16V | C30 | 1 |
| 132622-104 | Capacitor, Monolithic, 0.1 MFD±20%, 50V | C11,41 | 2 |
| 132619-107 | Capacitor, Electrolytic, 100 MFD, 16V | C4,24 | 2 |
| 132619-226 | Capacitor, Electrolytic, 22 MFD, 16V | C5,9 | 2 |
| 132617-106 | Capacitor, Electrolytic, 10 MFD, 35V | C7 | 1 |
| 132617-108 | Capacitor, Electrolytic, 1000 MFD, 25V | C17,31 | 2 |
| 820020 | Heatsink, TO-3 | (53) | 1 |
| 820019 | Heatsink, TO-220 | (54) | 2 |
| 132613-001 | Heatsink, Rectifier | (55) | 1 |
| 132614-001 | Heatsink, Rectifier | (56) | 1 |
| 809277 | Connector, 12-Pin (Used on 129881-1) | J1 | 1 |
| 809278 | Connector, 14-Pin (Used on 129881-2) | J1 | 1 |
| 835052 | Ring, Terminal, #6 | (59) | 1 |
| 812084 | Wire, 20 AWG, Solid Bus Tinned | W1,2 | A/R |
| 812131 | Wire, 20 AWG, Standard Vinyl Insulator | W3 | A/R |
| 810047 | Transistor, TIP-32 | Q4 | 1 |
| 808074 | Rectifier, 1N4934 GP | CR6,12 | 2 |
| 810048 | Transistor, MPS-A20 | Q2,6 | 2 |
| 808075 | Rectifier, 1N3889 | CR8 | 1 |
| 808076 | Rectifier, MR852 | CR11 | 1 |
| 808077 | Rectifier, MDA206 | BR1 | 1 |

/2988/ **Parts List, Switching Power Supply Assembly 115/230 VAC (Motorola) (cont'd)**

| *PART NUMBER* | *DESCRIPTION* | *REFERENCE DESIGNATION* | *QTY* |
|---|---|---|---|
| 810055 | IC, Linear, TL431 CLP | U3 | 1 |
| 810049 | Transistor, MPS-A17 | Q8 | 1 |
| 810050 | Transistor, MPS-A70 | Q1,3 | 2 |
| 810051 | Transistor, SJ7608 | Q5 | 1 |
| 810052 | MCR100-2 | SCR1,3 | 2 |
| 128348-4093 | IC, 4093 | U1 | 1 |
| 808078 | Diode, 1N4148 | CR1 - CR4 | 4 |
| 128348-7812 | Regulator, MC 7812 CT | U4 | 1 |
| 808050 | Diode, Zener, 1N5232B | CR9 | 1 |
| 808080 | Diode, Zener, 1N5256B | CR5 | 1 |
| 808081 | Diode, Zener, 1N5269B | CR20 | 1 |
| 808005 | Rectifier, 1N4002 | CR21 | 1 |
| 808022 | Rectifier, 1N4007 | CR7 | 1 |
| 132616-001 | Opto-Coupler, 4N35 (General Electric) | U2 | 1 |
| 810053 | SCR, 2N6394 | SCR2 | 1 |
| 810054 | Transistor, TIP-31 | Q7 | 1 |
| 128533-394 | Resistor, 390K±5%, 1/4W | R18 | 1 |
| 128533-434 | Resistor, 430K±5%, 1/4W | R18* | 1 |
| 128533-474 | Resistor, 470K±5%, 1/4W | R18 | 1 |
| 128533-514 | Resistor, 510K±5%, 1/4W | R18 | 1 |
| 128533-624 | Resistor, 620K±5%, 1/4W | R18 | 1 |
| 128533-684 | Resistor, 680K±5%, 1/4W | R18 | 1 |
| 128533-564 | Resistor, 560K±5%, 1/4W (903021) | R18 | 1 |

*R18 Selected to match U1 for 25±25 KHz operation.

129881 **Parts List, Switching Power Supply Assembly 115/230 VAC (Motorola) (cont'd)**

| *PART NUMBER* | *DESCRIPTION* | *REFERENCE DESIGNATION* | *QTY.* |
|---|---|---|---|
| 128533-680 | Resistor, 68 Ohm±5%, 1/4W | R19,39 | 2 |
| 823602 | Washer, Split Lock #6 | (93) | 2 |
| 128533-331 | Resistor, 330 Ohm15%, 1/4W | R44 | 1 |
| 808079 | Diode, Zener, 1N5242B, 12V, 500MW, 5% | CR22 | 1 |
| 839054 | Teflon Sleeving | (96) | A/R |
| 132632-001 | Spacer, Heatsink | CR8 | 1 |

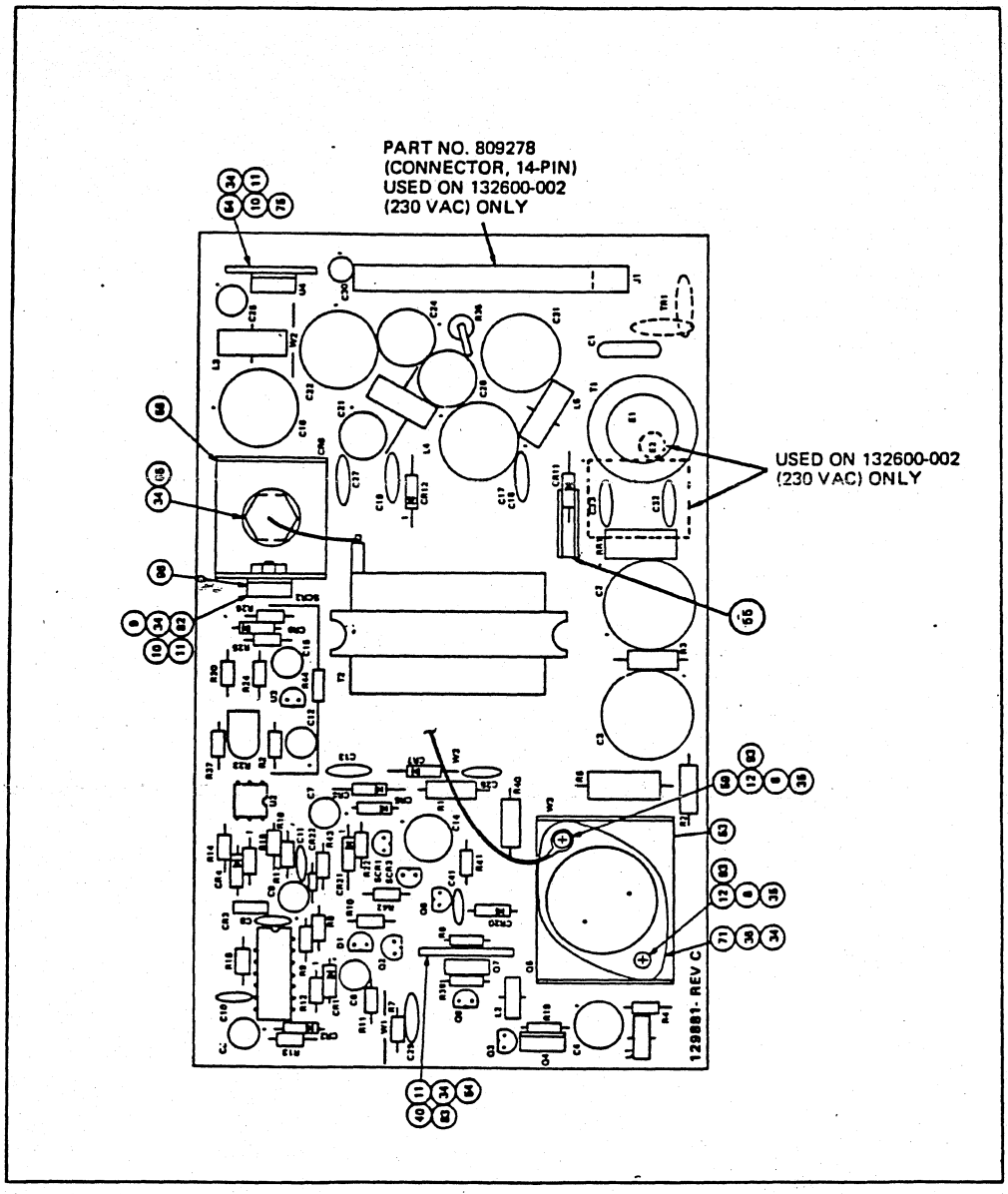


*129881* *Switching Power Supply Assembly, 115/230 VAC (Motorola)*

PARTSLIST :PL132670 PC BD ASSY, PS, +5 +-12 +27 V REV :B

ASSY :-001

APPR: APPR: REL: 10/01/82 PAGE 1

| F/N | QTY | PART NO. | DESCRIPTION | TYPE | NOTES | C1 | C2 |
|---|---|---|---|---|---|---|---|
| 1 | 1 | 132671-003 | PRINTED WIRING BOARD, P/S | | | | |
| 2 | 1 | 132612-002 | INDUCTOR ASSY, OUTPUT | L | 3 | | |
| 3 | 1 | 132612-003 | INDUCTOR ASSY, OUTPUT | L | 4 | | |
| 4 | 1 | 132611-036 | INDUCTOR ASSY | L | 1 | | |
| 5 | 1 | 132611-041 | INDUCTOR ASSY | L | 2 | | |
| 7 | 1 | 132657-001 | TFMR, 25 KHZ, 27V, VDE SW P/S | T | 1 | | |
| 8 | 2 | 822619 | PEM NUT SIZE 6-32 | | | | |
| 9 | 1 | 822011 | PEM NUT SIZE 10-32 | | | | |
| 10 | 3 | 822405 | KEPS NUT, 4-40 CADPL STEEL | | | | |
| 11 | 3 | 821407 | SCREW 4-40X1/4 PHIL RD CAD | | | | |
| 12 | 2 | 821602 | SCREW 6-32X1/2 PHIL RD CAD | | | | |
| 13 | 2 | 128538-274 | RES, CF, 270K, 5%, 1/2W | R | 1,30 | | |
| 14 | 2 | 128538-753 | RES, CF, 75K, 5%, 1/2W | R | 2,3 | | |
| 15 | 2 | 128533-101 | RES, CF, 100, 5%, 1/4W | R | 21,25 | | |
| 16 | 3 | 128533-102 | RES, CF, 1K, 5%, 1/4W | R | 7,8,9 | | |
| 17 | 2 | 128533-104 | RES, CF, 100K, 5%, 1/4W | R | 11,12 | | |
| 18 | 1 | 128533-103 | RES, CF, 10K, 5%, 1/4W | R | 32 | | |
| 19 | 1 | 128533-182 | RES, CF, 1.8K, 5%, 1/4W | R | 13 | | |
| 20 | 1 | 128533-220 | RES, CF, 22, 5%, 1/4W | R | 26 | | |
| 21 | 1 | 128533-271 | RES, CF, 270, 5%, 1/4W | R | 10 | | |
| 22 | 2 | 128533-332 | RES, CF, 3.3K, 5%, 1/4W | R | 20,24 | | |
| 23 | 3 | 128533-472 | RES, CF, 4.7K, 5%, 1/4W | R | 15,22,33 | | |
| 25 | 1 | 128533-150 | RES, CF, 15, 5%, 1/4W | R | 4 | | |
| 26 | 1 | 128533-752 | RES, CF, 7.5K, 5%, 1/4W | R | 16 | | |
| 27 | 1 | 128533-821 | RES, CF, 820, 5%, 1/4W | R | 6 | | |
| 28 | 1 | 128533-823 | RES, CF, 82K, 5%, 1/4W | R | 17 | | |
| 29 | 1 | 128539-201 | RES, CF, 200, 5%, 1W | R | 28 | | |
| 30 | 1 | 801037 | POT, FLAT TRIMMER, 1K LIN | R | 23 | | |
| 31 | 1 | 803094 | RES, MF, 2.21K, 1%, 1/4W | R | 31 | | |
| 32 | 1 | 803096 | THERMISTR DISC NTC 50-OHM | L | 5 | | |
| 33 | 1 | 132615-001 | SURGE LIMITER, 25-OHM | TR | 1 | | |
| 34 | 0 | 820016 | COMPD, HEATSINK: DOW #340 | | | | |
| 35 | 2 | 839052 | WSHR SHLDR INSULATOR #6 | | | | |
| 36 | 1 | 839053 | INSULATOR, MICA, TO3 TSTR | | | | |
| 37 | 3 | 132617-107 | CAP 100UF 25V AL ELECT RAD | C | 21,24,26 | | |
| 38 | 1 | 132622-471 | CAP 470PF 50V MONOLITHIC | C | 10 | | |
| 39 | 8 | 132623-102 | CAP 0.001UF 1KV CER DISC | C | 13,18,19,27,28 | | |
| | | | | C | 29,32,33 | | |
| 40 | 1 | 132623-681 | CAP 680PF 50V MONOLITHIC | C | 8 | | |
| 42 | 3 | 132618-105 | CAP 1UF 50V AL ELECT RAD | C | 6,12,15 | | |
| 43 | 1 | 132618-476 | CAP 47UF 50V AL ELECT RAD | C | 14 | | |
| 44 | 2 | 132619-228 | CAP 2200UF 10V AL ELCT RAD | C | 16,22 | | |
| 45 | 2 | 132620-107 | CAP 100UF 200V AL ELCT RAD | C | 2,3 | | |
| 46 | 1 | 920024 | HTSNK TO3 BLKANDZ TOPMTD | | FOR Q5 | | |
| 48 | 2 | 132622-104 | CAP 0.1UF 50V MONOLITHIC | C | 11,41 | | |
| 49 | 1 | 132619-107 | CAP 100UF 16V AL ELECT RAD | C | 4 | | |
| 50 | 2 | 132619-226 | CAP 22UF 16V AL ELECT RAD | C | 5,9 | | |
| 51 | 1 | 132617-106 | CAP 10UF 35V AL ELECT RAD | C | 7 | | |
| 52 | 1 | 129468-108 | CAP 1000uF 35V -20/+100% R | C | 17 | | |
| 53 | 1 | 820020 | HEATSINK, TO-3 | | FOR Q5 | | |

PARTSLIST :PL132670 PC BD ASSY, PS, +5 +-12 +27 V REV :B

ASSY :-001

10/01/82 PAGE 2

| F/N | QTY | PART NO. | DESCRIPTION | TYPE | NOTES | C1 | C2 |
|---|---|---|---|---|---|---|---|
| 54 | 1 | 820019 | HTSINK, TO-220: THM6025-TT | | FOR Q7 | | |
| 55 | 1 | 132613-002 | HEATSINK, RECTIFIER | | FOR CR11 | | |
| 56 | 1 | 132614-001 | HEATSINK, RECTIFIER | | FOR CR8 | | |
| 57 | 1 | 809285 | HEADER, FRLK, 5 RND PINS | J | 1 | | |
| 59 | 0 | 812101 | WIRE, 14 AWG TINNED BUS | | W5 (1.0 LG) | | |
| 60 | 0 | 812084 | WIRE, 20 AWG SOLID BUS | | W1,6 (.5 CL) | | |
| 61 | 0 | 812131 | WIRE, 20 STD VINYL INSL | | W4 (2.0 LG) | | |
| 62 | 1 | 810047 | TSTR, SI PWR, PNP TIP32 | Q | 4 | | |
| 63 | 2 | 808074 | RECT 1N4934 1A/100V FASTSW | CR | 6,12 | | |
| 64 | 2 | 810048 | TSTR, SI SMSIG, NPN MPSA20 | Q | 2,6 | | |
| 65 | 1 | 808075 | RECT 1N3889 12A/50V FASTSW | CR | 8 | | |
| 66 | 1 | 808076 | RECT MR852 3A/200V FASTSW | CR | 11 | | |
| 67 | 1 | 808095 | FWBR 5A/600V VDE-SPACD PCB | BR | 1 | | |
| 68 | 1 | 810055 | IC, ADJ SH REG TYPE TL431C | U | 3 | | |
| 69 | 1 | 810049 | TSTR, SI SMSIG, NPN MPSA17 | Q | 8 | | |
| 70 | 2 | 810050 | TSTR, SI SMSIG, PNP MPSA70 | Q | 1,3 | | |
| 71 | 1 | 810063 | TSTR HVPWSW TO3NPN MJ12005 | Q | 5 | | |
| 72 | 2 | 810052 | SCR, SG TO72 0.8A MCR100-2 | SC | 1,3 | | |
| 73 | 1 | 128348-4093 | IC, 4X2IN SCHMTRIG CD4093B | U | 1 | | |
| 74 | 4 | 808078 | DIODE 1N4148 0.1A/75V FSW | CR | 1,2,3,4 | | |
| 75 | 1 | 128348-7812 | IC, +12V REG, TYPE 7812 | U | 4 | | |
| 76 | 1 | 808050 | ZENER 5.6V 5% 0.5W 1N5232B | CR | 9 | | |
| 77 | 1 | 808080 | ZENER 30V 5% 0.5W 1N5256B | CR | 5 | | |
| 78 | 1 | 808081 | ZENER 87V 5% 0.5W 1N5269B | CR | 20 | | |
| 79 | 1 | 808005 | RECT GP 1A/100V 1N4002 | CR | 21 | | |
| 80 | 1 | 808022 | RECT GP 1A/1000V 1N4007 | CR | 7 | | |
| 81 | 1 | 853002 | OPTOISOLATOR,HV11AV1 | U | 2 | | |
| 82 | 1 | 810053 | SCR, TO220 12A/50V, 2N6394 | SC | 2 | | |
| 83 | 1 | 810054 | TSTR, SI PWR, NPN TIP31 B | Q | 7 | | |
| 84 | 1 | 132624-001 | RESISTOR, SELECTED | R | 18 | | |
| 92 | 2 | 128533-680 | RES, CF, 68, 5%, 1/4W | R | 19,29 | | |
| 94 | 1 | 128533-331 | RES, CF, 330, 5%, 1/4W | R | 34 | | |
| 95 | 1 | 808079 | ZENER 12V 5% 0.5W 1N5242B | CR | 22 | | |
| 96 | 1 | 132637-001 | CABLE ASSY, OUTPUT | | | | |
| 101 | 1 | 820013 | HEATSINK TO220 THM-6032BTT | | FOR U4 | | |
| 102 | 1 | 803093 | RES, WWND, 0.33, 5%, 2W | R | 5 | | |
| 103 | 1 | 128533-241 | RES CF 240 5% 1/4W | R | 14 | | |
| 104 | 2 | 803107 | RES 47 OHM 10% 5W WW AXL | R | 35,36 | | |
| 105 | 1 | 132632-002 | SPACER, HEATSINK | | FOR CR8 | | |
| 106 | 2 | 823602 | WSHR SPRGLK #6 CADPL STEEL | | | | |
| 107 | 1 | 835052 | TERM RING INSUL #6 | | | | |
| 108 | 1 | 823603 | WSHR #6 FL | | | | |

********** END OF LIST **********

PARTSLIST :PL132670 PC BD ASSY, PS, +5 +-12 +27 V REV :B

ASSY :-002

10/01/82 PAGE 3

| F/N | QTY | PART NO. | DESCRIPTION | TYPE | NOTES | C1 | C2 |
|---|---|---|---|---|---|---|---|
| 1 | 1 | 132671-003 | PRINTED WIRING BOARD, P/S | | | | |
| 2 | 1 | 132612-002 | INDUCTOR ASSY, OUTPUT | L | 3 | | |
| 3 | 1 | 132612-003 | INDUCTOR ASSY, OUTPUT | L | 4 | | |
| 4 | 1 | 132611-036 | INDUCTOR ASSY | L | 1 | | |
| 5 | 1 | 132611-041 | INDUCTOR ASSY | L | 2 | | |
| 7 | 1 | 132657-001 | TFMR,25 KHZ,27V,VDE SW P/S | T | 1 | | |
| 8 | 2 | 822619 | PEM NUT SIZE 6-32 | | | | |
| 9 | 1 | 822011 | PEM NUT SIZE 10-32 | | | | |
| 10 | 3 | 822405 | KEPS NUT, 4-40 CADPL STEEL | | | | |
| 11 | 3 | 821407 | SCREW 4-40X1/4 PHIL RD CAD | | | | |
| 12 | 2 | 821602 | SCREW 6-32X1/2 PHIL RD CAD | | | | |
| 13 | 2 | 128538-274 | RES, CF, 270K, 5%, 1/2W | R | 1,30 | | |
| 14 | 2 | 128538-753 | RES, CF, 75K, 5%, 1/2W | R | 2,3 | | |
| 15 | 2 | 128533-101 | RES, CF, 100, 5%, 1/4W | R | 21,25 | | |
| 16 | 3 | 128533-102 | RES, CF, 1K, 5%, 1/4W | R | 7,8,9 | | |
| 17 | 2 | 128533-104 | RES, CF, 100K, 5%, 1/4W | R | 11,12 | | |
| 18 | 1 | 128533-103 | RES, CF, 10K, 5%, 1/4W | R | 32 | | |
| 19 | 1 | 128533-182 | RES, CF, 1.8K, 5%, 1/4W | R | 13 | | |
| 20 | 1 | 128533-220 | RES, CF, 22, 5%, 1/4W | R | 26 | | |
| 21 | 1 | 128533-271 | RES, CF, 270, 5%, 1/4W | R | 10 | | |
| 22 | 2 | 128533-332 | RES, CF, 3.3K, 5%, 1/4W | R | 20,24 | | |
| 23 | 3 | 128533-472 | RES, CF, 4.7K, 5%, 1/4W | R | 15,22,33 | | |
| 25 | 1 | 128533-150 | RES, CF, 15, 5%, 1/4W | R | 4 | | |
| 26 | 1 | 128533-752 | RES, CF, 7.5K, 5%, 1/4W | R | 16 | | |
| 27 | 1 | 128533-821 | RES, CF, 820, 5%, 1/4W | R | 6 | | |
| 28 | 1 | 128533-823 | RES, CF, 82K, 5%, 1/4W | R | 17 | | |
| 29 | 1 | 128539-201 | RES, CF, 200, 5%, 1W | R | 28 | | |
| 30 | 1 | 801037 | POT, FLAT TRIMMER, 1K LIN | R | 23 | | |
| 31 | 1 | 803094 | RES, MF, 2.21K, 1%, 1/4W | R | 31 | | |
| 32 | 1 | 803096 | THERMISTR DISC NTC 50-OHM | L | 5 | | |
| 33 | 1 | 132615-001 | SURGE LIMITER, 25-OHM | TR | 1 | | |
| 34 | 0 | 820016 | COMPD, HEATSINK: DOW #340 | | | | |
| 35 | 2 | 839052 | WSHR SHLDR INSULATOR #6 | | | | |
| 36 | 1 | 839053 | INSULATOR, MICA, TO3 TSTR | | | | |
| 37 | 3 | 132617-107 | CAP 100UF 25V AL ELECT RAD | C | 21,24,26 | | |
| 38 | 1 | 132622-471 | CAP 470PF 50V MONOLITHIC | C | 10 | | |
| 39 | 8 | 132623-102 | CAP 0.001UF 1KV CER DISC | C | 13,18,19,27,28 | | |
| | | | | C | 29,32,33 | | |
| 40 | 1 | 132623-681 | CAP 680PF 50V MONOLITHIC | C | 8 | | |
| 42 | 3 | 132618-105 | CAP 1UF 50V AL ELECT RAD | C | 6,12,15 | | |
| 43 | 1 | 132618-476 | CAP 47UF 50V AL ELECT RAD | C | 14 | | |
| 44 | 2 | 132619-228 | CAP 2200UF 10V AL ELCT RAD | C | 16,22 | | |
| 45 | 2 | 132620-107 | CAP 100UF 200V AL ELCT RAD | C | 2,3 | | |
| 46 | 1 | 820024 | HTSNK TO3 BLKANDZ TOPMTD | | FOR Q5 | | |
| 48 | 2 | 132622-104 | CAP 0.1UF 50V MONOLITHIC | C | 11,41 | | |
| 49 | 1 | 132619-107 | CAP 100UF 16V AL ELECT RAD | C | 4 | | |
| 50 | 2 | 132619-226 | CAP 22UF 16V AL ELECT RAD | C | 5,9 | | |
| 51 | 1 | 132617-106 | CAP 10UF 35V AL ELECT RAD | C | 7 | | |
| 52 | 1 | 129468-108 | CAP 1000uF 35V -20/+100% R | C | 17 | | |
| 53 | 1 | 820020 | HEATSINK, TO-3 | | FOR Q5 | | |

PARTSLIST :PL132670 PC BD ASSY, PS, +5 +-12 +27 V REV :B

ASSY :-002

10/01/82 PAGE 4

| F/N | QTY | PART NO. | DESCRIPTION | TYPE | NOTES | C1 | C2 |
|---|---|---|---|---|---|---|---|
| 54 | 1 | 820019 | HTSINK, TO-220: THM6025-TT | | FOR Q7 | | |
| 55 | 1 | 132613-002 | HEATSINK, RECTIFIER | | FOR CR11 | | |
| 56 | 1 | 132614-001 | HEATSINK, RECTIFIER | | FOR CR8 | | |
| 57 | 1 | 809285 | HEADER, FRLK, 5 RND PINS | J | 1 | | |
| 59 | 0 | 812101 | WIRE, 14 AWG TINNED BUS | | W5 (1.0 LG) | | |
| 60 | 0 | 812084 | WIRE, 20 AWG SOLID BUS | | W1,6 (.5 CL) | | |
| 61 | 0 | 812131 | WIRE, 20 STD VINYL INSL | | W4 (2.0 LG) | | |
| 62 | 1 | 810047 | TSTR, SI PWR, PNP TIP32 | Q | 4 | | |
| 63 | 2 | 808074 | RECT 1N4934 1A/100V FASTSW | CR | 6,12 | | |
| 64 | 2 | 810048 | TSTR, SI SMSIG, NPN MPSA20 | Q | 2,6 | | |
| 65 | 1 | 808075 | RECT 1N3889 12A/50V FASTSW | CR | 8 | | |
| 66 | 1 | 808076 | RECT MR852 3A/200V FASTSW | CR | 11 | | |
| 67 | 1 | 808095 | FWBR 5A/600V VDE-SPACD PCB | BR | 1 | | |
| 68 | 1 | 810055 | IC, ADJ SH REG TYPE TL431C | U | 3 | | |
| 69 | 1 | 810049 | TSTR, SI SMSIG, NPN MPSA17 | Q | 8 | | |
| 70 | 2 | 810050 | TSTR, SI SMSIG, PNP MPSA70 | Q | 1,3 | | |
| 71 | 1 | 810063 | TSTR HVPWSW TO3NPN MJ12005 | Q | 5 | | |
| 72 | 2 | 810052 | SCR, SG TO92 0.8A MCR100-2 | SC | 1,3 | | |
| 73 | 1 | 128348-4093 | IC, 4X2IN SCHMTRIG CD4093B | U | 1 | | |
| 74 | 4 | 808078 | DIODE 1N4148 0.1A/75V FSW | CR | 1,2,3,4 | | |
| 75 | 1 | 128348-7812 | IC, +12V REG, TYPE 7812 | U | 4 | | |
| 76 | 1 | 808050 | ZENER 5.6V 5% 0.5W 1N5232B | CR | 9 | | |
| 77 | 1 | 808080 | ZENER 30V 5% 0.5W 1N5256B | CR | 5 | | |
| 78 | 1 | 808081 | ZENER 87V 5% 0.5W 1N5269B | CR | 20 | | |
| 79 | 1 | 808005 | RECT GP 1A/100V 1N4002 | CR | 21 | | |
| 80 | 1 | 808022 | RECT GP 1A/1000V 1N4007 | CR | 7 | | |
| 81 | 1 | 853002 | OPTOISOLATOR,HV11AV1 | U | 2 | | |
| 82 | 1 | 810053 | SCR, TO220 12A/50V, 2N6394 | SC | 2 | | |
| 83 | 1 | 810054 | TSTR, SI PWR, NPN TIP31 B | Q | 7 | | |
| 84 | 1 | 132624-001 | RESISTOR, SELECTED | R | 18 | | |
| 92 | 2 | 128533-680 | RES, CF, 68, 5%, 1/4W | R | 19,29 | | |
| 94 | 1 | 128533-331 | RES, CF, 330, 5%, 1/4W | R | 34 | | |
| 95 | 1 | 808079 | ZENER 12V 5% 0.5W 1N5242B | CR | 22 | | |
| 96 | 1 | 132637-001 | CABLE ASSY, OUTPUT | | | | |
| 101 | 1 | 820013 | HEATSINK TO220 THM-6032BTT | | FOR U4 | | |
| 102 | 1 | 803093 | RES, WWND, 0.33, 5%, 2W | R | 5 | | |
| 103 | 1 | 128533-241 | RES CF 240 5% 1/4W | R | 14 | | |
| 104 | 2 | 803107 | RES 47 OHM 10% 5W WW AXL | R | 35,36 | | |
| 105 | 1 | 132632-002 | SPACER, HEATSINK | | FOR CR8 | | |
| 106 | 2 | 823602 | WSHR SPRGLK #6 CADPL STEEL | | | | |
| 107 | 1 | 835052 | TERM RING INSUL #6 | | | | |
| 108 | 1 | 823603 | WSHR #6 FL | | | | |

********** END OF LIST **********

PARTSLIST :PL132670 PC BD ASSY, PS, +5 +-12 +27 V REV :B

ASSY :-003

10/01/82 PAGE 5

| F/N | QTY | PART NO. | DESCRIPTION | TYPE | NOTES | C1 | C2 |
|---|---|---|---|---|---|---|---|
| 1 | 1 | 132671-003 | PRINTED WIRING BOARD, P/S | | | | |
| 2 | 1 | 132612-002 | INDUCTOR ASSY, OUTPUT | L | 3 | | |
| 3 | 1 | 132612-003 | INDUCTOR ASSY, OUTPUT | L | 4 | | |
| 4 | 1 | 132611-036 | INDUCTOR ASSY | L | 1 | | |
| 5 | 1 | 132611-041 | INDUCTOR ASSY | L | 2 | | |
| 6 | 1 | 132673-001 | TFMR 25KHZ, 115/230, SW P/S | T | 1 | | |
| 8 | 2 | 822619 | PEM NUT SIZE 6-32 | | | | |
| 9 | 1 | 822011 | PEM NUT SIZE 10-32 | | | | |
| 10 | 3 | 822405 | KEPS NUT, 4-40 CADPL STEEL | | | | |
| 11 | 3 | 821407 | SCREW 4-40X1/4 PHIL RD CAD | | | | |
| 12 | 2 | 821602 | SCREW 6-32X1/2 PHIL RD CAD | | | | |
| 13 | 2 | 128538-274 | RES, CF, 270K, 5%, 1/2W | R | 1,30 | | |
| 14 | 2 | 128538-753 | RES, CF, 75K, 5%, 1/2W | R | 2,3 | | |
| 15 | 2 | 128533-101 | RES, CF, 100, 5%, 1/4W | R | 21,25 | | |
| 16 | 3 | 128533-102 | RES, CF, 1K, 5%, 1/4W | R | 7,8,9 | | |
| 17 | 2 | 128533-104 | RES, CF, 100K, 5%, 1/4W | R | 11,12 | | |
| 18 | 1 | 128533-103 | RES, CF, 10K, 5%, 1/4W | R | 32 | | |
| 19 | 1 | 128533-182 | RES, CF, 1.8K, 5%, 1/4W | R | 13 | | |
| 20 | 1 | 128533-220 | RES, CF, 22, 5%, 1/4W | R | 26 | | |
| 21 | 1 | 128533-271 | RES, CF, 270, 5%, 1/4W | R | 10 | | |
| 22 | 2 | 128533-332 | RES, CF, 3.3K, 5%, 1/4W | R | 20,24 | | |
| 23 | 3 | 128533-472 | RES, CF, 4.7K, 5%, 1/4W | R | 15,22,33 | | |
| 25 | 1 | 128533-150 | RES, CF, 15, 5%, 1/4W | R | 4 | | |
| 26 | 1 | 128533-752 | RES, CF, 7.5K, 5%, 1/4W | R | 16 | | |
| 27 | 1 | 128533-821 | RES, CF, 820, 5%, 1/4W | R | 6 | | |
| 28 | 1 | 128533-823 | RES, CF, 82K, 5%, 1/4W | R | 17 | | |
| 29 | 1 | 128539-201 | RES, CF, 200, 5%, 1W | R | 28 | | |
| 30 | 1 | 801037 | POT, FLAT TRIMMER, 1K LIN | R | 23 | | |
| 31 | 1 | 803094 | RES, MF, 2.21K, 1%, 1/4W | R | 31 | | |
| 32 | 1 | 803096 | THERMISTR DISC NTC 50-OHM | L | 5 | | |
| 33 | 1 | 132615-001 | SURGE LIMITER, 25-OHM | TR | 1 | | |
| 34 | 0 | 820016 | COMPD, HEATSINK: DOW #340 | | | | |
| 35 | 2 | 839052 | WSHR SHLDR INSULATOR #6 | | | | |
| 36 | 1 | 839053 | INSULATOR, MICA, TO3 TSTR | | | | |
| 37 | 3 | 132617-107 | CAP 100UF 25V AL ELECT RAD | C | 21,24,26 | | |
| 38 | 1 | 132622-471 | CAP 470PF 50V MONOLITHIC | C | 10 | | |
| 39 | 8 | 132623-102 | CAP 0.001UF 1KV CER DISC | C | 13,18,19,27,28 | | |
| | | | | C | 29,32,33 | | |
| 40 | 1 | 132623-681 | CAP 680PF 50V MONOLITHIC | C | 8 | | |
| 42 | 3 | 132618-105 | CAP 1UF 50V AL ELECT RAD | C | 6,12,15 | | |
| 43 | 1 | 132618-476 | CAP 47UF 50V AL ELECT RAD | C | 14 | | |
| 44 | 2 | 132619-228 | CAP 2200UF 10V AL ELCT RAD | C | 16,22 | | |
| 45 | 2 | 132620-107 | CAP 100UF 200V AL ELCT RAD | C | 2,3 | | |
| 46 | 1 | 820024 | HTSNK TO3 BLKANDZ TOPMTD | | FOR Q5 | | |
| 48 | 2 | 132622-104 | CAP 0.1UF 50V MONOLITHIC | C | 11,41 | | |
| 49 | 1 | 132619-107 | CAP 100UF 16V AL ELECT RAD | C | 4 | | |
| 50 | 2 | 132619-226 | CAP 22UF 16V AL ELECT RAD | C | 5,9 | | |
| 51 | 1 | 132617-106 | CAP 10UF 35V AL ELECT RAD | C | 7 | | |
| 52 | 1 | 129468-108 | CAP 1000uF 35V -20/+100% R | C | 17 | | |
| 53 | 1 | 820020 | HEATSINK, TO-3 | | FOR Q5 | | |

PARTSLIST :PL132670 PC BD ASSY, PS, +5 +-12 +27 V REV :B

ASSY :-003

10/01/82 PAGE 6

| F/N | QTY | PART NO. | DESCRIPTION | TYPE | NOTES | C1 | C2 |
|---|---|---|---|---|---|---|---|
| 54 | 1 | 820019 | HTSINK, TO-220: THM6025-TT | | FOR Q7 | | |
| 55 | 1 | 132613-002 | HEATSINK, RECTIFIER | | FOR CR11 | | |
| 56 | 1 | 132614-001 | HEATSINK, RECTIFIER | | FOR CR8 | | |
| 57 | 1 | 809285 | HEADER, FRLK, 5 RND PINS | J | 1 | | |
| 59 | 0 | 812101 | WIRE, 14 AWG TINNED BUS | | W5 (1.0 LG) | | |
| 60 | 0 | 812084 | WIRE, 20 AWG SOLID BUS | | W1,6 (.5 CL) | | |
| 61 | 0 | 812131 | WIRE, 20 STD VINYL INSL | | W4 (2.0 LG) | | |
| 62 | 1 | 810047 | TSTR, SI PWR, PNP TIP32 | Q | 4 | | |
| 63 | 2 | 808074 | RECT 1N4934 1A/100V FASTSW | CR | 6,12 | | |
| 64 | 2 | 810048 | TSTR, SI SMSIG, NPN MPSA20 | Q | 2,6 | | |
| 65 | 1 | 808075 | RECT 1N3889 12A/50V FASTSW | CR | 8 | | |
| 66 | 1 | 808076 | RECT MR852 3A/200V FASTSW | CR | 11 | | |
| 67 | 1 | 808095 | FWBR 5A/600V VDE-SPACD PCB | BR | 1 | | |
| 68 | 1 | 810055 | IC, ADJ SH REG TYPE TL431C | U | 3 | | |
| 69 | 1 | 810049 | TSTR, SI SMSIG, NPN MPSA17 | Q | 8 | | |
| 70 | 2 | 810050 | TSTR, SI SMSIG, PNP MPSA70 | Q | 1,3 | | |
| 71 | 1 | 810063 | TSTR HVPWSW TO3NPN MJ12005 | Q | 5 | | |
| 72 | 2 | 810052 | SCR, SG TO92 0.8A MCR100-2 | SC | 1,3 | | |
| 73 | 1 | 128348-4093 | IC, 4X2IN SCHMTRIG CD4093B | U | 1 | | |
| 74 | 4 | 808078 | DIODE 1N4148 0.1A/75V FSW | CR | 1,2,3,4 | | |
| 75 | 1 | 128348-7812 | IC, +12V REG, TYPE 7812 | U | 4 | | |
| 76 | 1 | 808050 | ZENER 5.6V 5% 0.5W 1N5232B | CR | 9 | | |
| 77 | 1 | 808080 | ZENER 30V 5% 0.5W 1N5256B | CR | 5 | | |
| 78 | 1 | 808081 | ZENER 87V 5% 0.5W 1N5269B | CR | 20 | | |
| 79 | 1 | 808005 | RECT GP 1A/100V 1N4002 | CR | 21 | | |
| 80 | 1 | 808022 | RECT GP 1A/1000V 1N4007 | CR | 7 | | |
| 81 | 1 | 853002 | OPTOISOLATOR,HV11AV1 | U | 2 | | |
| 82 | 1 | 810053 | SCR, TO220 12A/50V, 2N6394 | SC | 2 | | |
| 83 | 1 | 810054 | TSTR, SI PWR, NPN TIP31 B | Q | 7 | | |
| 84 | 1 | 132624-001 | RESISTOR, SELECTED | R | 18 | | |
| 92 | 2 | 128533-680 | RES, CF, 68, 5%, 1/4W | R | 19,29 | | |
| 94 | 1 | 128533-331 | RES, CF, 330, 5%, 1/4W | R | 34 | | |
| 95 | 1 | 808079 | ZENER 12V 5% 0.5W 1N5242B | CR | 22 | | |
| 96 | 1 | 132637-001 | CABLE ASSY, OUTPUT | | | | |
| 101 | 1 | 820013 | HEATSINK TO220 THM-6032BTT | | FOR U4 | | |
| 102 | 1 | 803093 | RES, WWND, 0.33, 5%, 2W | R | 5 | | |
| 103 | 1 | 128533-241 | RES CF 240 5% 1/4W | R | 14 | | |
| 104 | 2 | 803107 | RES 47 OHM 10% 5W WW AXL | R | 35,36 | | |
| 105 | 1 | 132632-002 | SPACER, HEATSINK | | FOR CR8 | | |
| 106 | 2 | 823602 | WSHR SPRGLK #6 CADPL STEEL | | | | |
| 107 | 1 | 835052 | TERM RING INSUL #6 | | | | |
| 108 | 1 | 823603 | WSHR #6 FL | | | | |

********** END OF LIST **********

PARTSLIST :PL132670 PC BD ASSY, PS, +5 +-12 +27 V REV :B

ASSY :-004

10/01/82 PAGE 7

| F/N | QTY | PART NO. | DESCRIPTION | TYPE | NOTES | C1 | C2 |
|---|---|---|---|---|---|---|---|
| 1 | 1 | 132671-003 | PRINTED WIRING BOARD, P/S | | | | |
| 2 | 1 | 132612-002 | INDUCTOR ASSY, OUTPUT | L | 3 | | |
| 3 | 1 | 132612-003 | INDUCTOR ASSY, OUTPUT | L | 4 | | |
| 4 | 1 | 132611-036 | INDUCTOR ASSY | L | 1 | | |
| 5 | 1 | 132611-041 | INDUCTOR ASSY | L | 2 | | |
| 6 | 1 | 132673-001 | TFMR 25KHZ,115/230,SW P/S | T | 1 | | |
| 8 | 2 | 822619 | PEM NUT SIZE 6-32 | | | | |
| 9 | 1 | 822011 | PEM NUT SIZE 10-32 | | | | |
| 10 | 3 | 822405 | KEPS NUT, 4-40 CADPL STEEL | | | | |
| 11 | 3 | 821407 | SCREW 4-40X1/4 PHIL RD CAD | | | | |
| 12 | 2 | 821602 | SCREW 6-32X1/2 PHIL RD CAD | | | | |
| 13 | 2 | 128538-274 | RES, CF, 270K, 5%, 1/2W | R | 1,30 | | |
| 14 | 2 | 128538-753 | RES, CF, 75K, 5%, 1/2W | R | 2,3 | | |
| 15 | 2 | 128533-101 | RES, CF, 100, 5%, 1/4W | R | 21,25 | | |
| 16 | 3 | 128533-102 | RES, CF, 1K, 5%, 1/4W | R | 7,8,9 | | |
| 17 | 2 | 128533-104 | RES, CF, 100K, 5%, 1/4W | R | 11,12 | | |
| 18 | 1 | 128533-103 | RES, CF, 10K, 5%, 1/4W | R | 32 | | |
| 19 | 1 | 128533-182 | RES, CF, 1.8K, 5%, 1/4W | R | 13 | | |
| 20 | 1 | 128533-220 | RES, CF, 22, 5%, 1/4W | R | 26 | | |
| 21 | 1 | 128533-271 | RES, CF, 270, 5%, 1/4W | R | 10 | | |
| 22 | 2 | 128533-332 | RES, CF, 3.3K, 5%, 1/4W | R | 20,24 | | |
| 23 | 3 | 128533-472 | RES, CF, 4.7K, 5%, 1/4W | R | 15,22,33 | | |
| 25 | 1 | 128533-150 | RES, CF, 15, 5%, 1/4W | R | 4 | | |
| 26 | 1 | 128533-752 | RES, CF, 7.5K, 5%, 1/4W | R | 16 | | |
| 27 | 1 | 128533-821 | RES, CF, 820, 5%, 1/4W | R | 6 | | |
| 28 | 1 | 128533-823 | RES, CF, 82K, 5%, 1/4W | R | 17 | | |
| 29 | 1 | 128539-201 | RES, CF, 200, 5%, 1W | R | 28 | | |
| 30 | 1 | 801037 | POT, FLAT TRIMMER, 1K LIN | R | 23 | | |
| 31 | 1 | 803094 | RES, MF, 2.21K, 1%, 1/4W | R | 31 | | |
| 32 | 1 | 803096 | THERMISTR DISC NTC 50-OHM | L | 5 | | |
| 33 | 1 | 132615-001 | SURGE LIMITER, 25-OHM | TR | 1 | | |
| 34 | 0 | 820016 | COMPD, HEATSINK: DOW #340 | | | | |
| 35 | 2 | 839052 | WSHR SHLDR INSULATOR #6 | | | | |
| 36 | 1 | 839053 | INSULATOR, MICA, TO3 TSTR | | | | |
| 37 | 3 | 132617-107 | CAP 100UF 25V AL ELECT RAD | C | 21,24,26 | | |
| 38 | 1 | 132622-471 | CAP 470PF 50V MONOLITHIC | C | 10 | | |
| 39 | 8 | 132623-102 | CAP 0.001UF 1KV CER DISC | C | 13,18,19,27,28 | | |
| | | | | C | 29,32,33 | | |
| 40 | 1 | 132623-681 | CAP 680PF 50V MONOLITHIC | C | 8 | | |
| 42 | 3 | 132618-105 | CAP 1UF 50V AL ELECT RAD | C | 6,12,15 | | |
| 43 | 1 | 132618-476 | CAP 47UF 50V AL ELECT RAD | C | 14 | | |
| 44 | 2 | 132619-228 | CAP 2200UF 10V AL ELCT RAD | C | 16,22 | | |
| 45 | 2 | 132620-107 | CAP 100UF 200V AL ELCT RAD | C | 2,3 | | |
| 46 | 1 | 820024 | HTSNK TO3 BLKANDZ TOPMTD | | FOR Q5 | | |
| 48 | 2 | 132622-104 | CAP 0.1UF 50V MONOLITHIC | C | 11,41 | | |
| 49 | 1 | 132619-107 | CAP 100UF 16V AL ELECT RAD | C | 4 | | |
| 50 | 2 | 132619-226 | CAP 22UF 16V AL ELECT RAD | C | 5,9 | | |
| 51 | 1 | 132617-106 | CAP 10UF 35V AL ELECT RAD | C | 7 | | |
| 52 | 1 | 129468-108 | CAP 1000uF 35V -20/+100% R | C | 17 | | |
| 53 | 1 | 820020 | HEATSINK, TO-3 | | FOR Q5 | | |

PARTSLIST :PL132670 PC BD ASSY, PS, +5 +-12 +27 V REV :B

ASSY :-004

10/01/82 PAGE 8

| F/N | QTY | PART NO. | DESCRIPTION | TYPE | NOTES | C1 | C2 |
|---|---|---|---|---|---|---|---|
| 54 | 1 | 820019 | HTSINK, TO-220: THM6025-TT | | FOR Q7 | | |
| 55 | 1 | 132613-002 | HEATSINK, RECTIFIER | | FOR CR11 | | |
| 56 | 1 | 132614-001 | HEATSINK, RECTIFIER | | FOR CR8 | | |
| 57 | 1 | 809285 | HEADER, FRLK, 5 RND PINS | J | 1 | | |
| 59 | 0 | 812101 | WIRE, 14 AWG TINNED BUS | | W5 (1.0 LG) | | |
| 60 | 0 | 812084 | WIRE, 20 AWG SOLID BUS | | W1,6 (.5 CL) | | |
| 61 | 0 | 812131 | WIRE, 20 STD VINYL INSL | | W4 (2.0 LG) | | |
| 62 | 1 | 810047 | TSTR, SI PWR, PNP TIP32 | Q | 4 | | |
| 63 | 2 | 808074 | RECT 1N4934 1A/100V FASTSW | CR | 6,12 | | |
| 64 | 2 | 810048 | TSTR, SI SMSIG, NPN MPSA20 | Q | 2,6 | | |
| 65 | 1 | 808075 | RECT 1N3889 12A/50V FASTSW | CR | 8 | | |
| 66 | 1 | 808076 | RECT MR852 3A/200V FASTSW | CR | 11 | | |
| 67 | 1 | 808095 | FWBR 5A/600V VDE-SPACD PCB | BR | 1 | | |
| 68 | 1 | 810055 | IC, ADJ SH REG TYPE TL431C | U | 3 | | |
| 69 | 1 | 810049 | TSTR, SI SMSIG, NPN MPSA17 | Q | 8 * | | |
| 70 | 2 | 810050 | TSTR, SI SMSIG, PNP MPSA70 | Q | 1,3 | | |
| 71 | 1 | 810063 | TSTR HVPWSW TO3NPN MJ12005 | Q | 5 | | |
| 72 | 2 | 810052 | SCR, SG TO92 0.8A MCR100-2 | SC | 1,3 | | |
| 73 | 1 | 128348-4093 | IC, 4X2IN SCHMTRIG CD4093B | U | 1 | | |
| 74 | 4 | 808078 | DIODE 1N4148 0.1A/75V FSW | CR | 1,2,3,4 | | |
| 75 | 1 | 128348-7812 | IC, +12V REG, TYPE 7812 | U | 4 | | |
| 76 | 1 | 808050 | ZENER 5.6V 5% 0.5W 1N5232B | CR | 9 | | |
| 77 | 1 | 808080 | ZENER 30V 5% 0.5W 1N5256B | CR | 5 | | |
| 78 | 1 | 808081 | ZENER 87V 5% 0.5W 1N5269B | CR | 20 | | |
| 79 | 1 | 808005 | RECT GP 1A/100V 1N4002 | CR | 21 | | |
| 80 | 1 | 808022 | RECT GP 1A/1000V 1N4007 | CR | 7 | | |
| 81 | 1 | 853002 | OPTOISOLATOR,HV11AV1 | U | 2 | | |
| 82 | 1 | 810053 | SCR, TO220 12A/50V, 2N6394 | SC | 2 | | |
| 83 | 1 | 810054 | TSTR, SI PWR, NPN TIP31 B | Q | 7 | | |
| 84 | 1 | 132624-001 | RESISTOR, SELECTED | R | 18 | | |
| 92 | 2 | 128533-680 | RES, CF, 68, 5%, 1/4W | R | 19,29 | | |
| 94 | 1 | 128533-331 | RES, CF, 330, 5%, 1/4W | R | 34 | | |
| 95 | 1 | 808079 | ZENER 12V 5% 0.5W 1N5242B | CR | 22 | | |
| 96 | 1 | 132637-001 | CABLE ASSY, OUTPUT | | | | |
| 101 | 1 | 820013 | HEATSINK TO220 THM-6032BTT | | FOR U4 | | |
| 102 | 1 | 803093 | RES, WWND, 0.33, 5%, 2W | R | 5 | | |
| 103 | 1 | 128533-241 | RES CF 240 5% 1/4W | R | 14 | | |
| 104 | 2 | 803107 | RES 47 OHM 10% 5W WW AXL | R | 35,36 | | |
| 105 | 1 | 132632-002 | SPACER, HEATSINK | | FOR CR8 | | |
| 106 | 2 | 823602 | WSHR SPRGLK #6 CADPL STEEL | | | | |
| 107 | 1 | 835052 | TERM RING INSUL #6 | | | | |
| 108 | 1 | 823603 | WSHR #6 FL | | | | |

********** END OF LIST **********

# REVISION HISTORY

PARTSLIST : PL132670 REV : B

10/01/82 PAGE 9

**********

REV : X2 DCN : 3368 ASSY : -003 AUTH : KLK DATE : 09/01/82

| F/N | PART NO. | QTY | TYPE | REF DES/NOTES | ACTION |
|---|---|---|---|---|---|
| 0 | | | | | ASSY ADDED |

REV : X2 DCN : 3368 ASSY : -004 AUTH : KLK DATE : 09/01/82

| F/N | PART NO. | QTY | TYPE | REF DES/NOTES | ACTION |
|---|---|---|---|---|---|
| 0 | | | | | ASSY ADDED |

REV : X2 DCN : 3368 ASSY : -001 AUTH : KLK DATE : 09/01/82

| F/N | PART NO. | QTY | TYPE | REF DES/NOTES | ACTION |
|---|---|---|---|---|---|
| 3 | 132612-003 | 2 | L | 4,5 | QTY/RD CHG |
| 46 | | | | | F/N ADDED |

REV : X2 DCN : 3368 ASSY : ALL AUTH : KLK DATE : 09/29/82

| F/N | PART NO. | TYPE | NOTES | C1 | C2 |
|---|---|---|---|---|---|
| 71 | 810063 | G | | | |
| 104 | 803107 | R | | | |

REV : X2 DCN : 3368 ASSY : -001 AUTH : KLK DATE : 09/30/82

| F/N | PART NO. | QTY | TYPE | REF DES/NOTES | ACTION |
|---|---|---|---|---|---|
| 32 | | | | | F/N ADDED |

REV : X2 DCN : 3368 ASSY : -002 AUTH : KLK DATE : 09/30/82

| F/N | PART NO. | QTY | TYPE | REF DES/NOTES | ACTION |
|---|---|---|---|---|---|
| 3 | 132612-003 | 2 | L | 4,5 | QTY/RD CHG |
| 32 | | | | | F/N ADDED |
| 46 | | | | | F/N ADDED |

REV : A DCN : 3543 ASSY : -001 AUTH : KLK DATE : 09/30/82

| F/N | PART NO. | QTY | TYPE | REF DES/NOTES | ACTION |
|---|---|---|---|---|---|
| 106 | | | | | F/N ADDED |
| 107 | | | | | F/N ADDED |

REV : A DCN : 3543 ASSY : -002 AUTH : KLK DATE : 09/30/82

| F/N | PART NO. | QTY | TYPE | REF DES/NOTES | ACTION |
|---|---|---|---|---|---|
| 106 | | | | | F/N ADDED |
| 107 | | | | | F/N ADDED |

REV : A DCN : 3543 ASSY : -003 AUTH : KLK DATE : 09/30/82

| F/N | PART NO. | QTY | TYPE | REF DES/NOTES | ACTION |
|---|---|---|---|---|---|
| 106 | | | | | F/N ADDED |

# REVISION HISTORY

PARTSLIST : PL132670 REV : B

10/01/82 PAGE 10

**********

107 F/N ADDED

REV : A DCN : 3543 ASSY : -004 AUTH : KLK DATE : 09/30/82

| F/N | PART NO. | QTY | TYPE | REF DES/NOTES | ACTION |
|---|---|---|---|---|---|
| 106 | | | | | F/N ADDED |
| 107 | | | | | F/N ADDED |

REV : B DCN : 3600 ASSY : -001 AUTH : KLK DATE : 09/30/82

| F/N | PART NO. | QTY | TYPE | REF DES/NOTES | ACTION |
|---|---|---|---|---|---|
| 108 | | | | | F/N ADDED |

REV : B DCN : 3600 ASSY : -002 AUTH : KLK DATE : 09/30/82

| F/N | PART NO. | QTY | TYPE | REF DES/NOTES | ACTION |
|---|---|---|---|---|---|
| 108 | | | | | F/N ADDED |

REV : B DCN : 3600 ASSY : -003 AUTH : KLK DATE : 09/30/82

| F/N | PART NO. | QTY | TYPE | REF DES/NOTES | ACTION |
|---|---|---|---|---|---|
| 108 | | | | | F/N ADDED |

REV : B DCN : 3600 ASSY : -004 AUTH : KLK DATE : 09/30/82

| F/N | PART NO. | QTY | TYPE | REF DES/NOTES | ACTION |
|---|---|---|---|---|---|
| 108 | | | | | F/N ADDED |

********** END OF LIST **********

# APPENDIX A
# BLOCK/EDIT MODE OPTION OPERATION

## A.1 INTRODUCTION

This Appendix describes the operation of the **ADM 36** when the Block/Edit Mode Option is installed. The changes and additions to the standard **ADM 36** Set-Up Mode, Keyboard Operation, Control Sequences and Communications Protocol are detailed in the paragraphs that follow.

## A.2 DESCRIPTION

The Block/Edit Mode option primarily provides the ability to format a screen of data prior to transmission to the host. The block of data may be a full or partial page and specified areas may be protected against transmission or erasure. The ability to edit screen data from the keyboard as well as from the host is included, with associated keycap changes. Also included is the ability to operate in applications using half-duplex code turnaround protocol. All of the standard features and control sequences of the **ADM 36** are retained as described in **Sections 1** through **3** of this manual, with the following two exceptions:

Control Sequence DAQ - Define Area Qualification
This control sequence is disabled when the Block/Edit Mode option is installed. The protected character feature is retained by the addition of a new control sequence which can utilize any visual attribute to signify protected data, as well as the standard reduced intensity attribute.

Control Sequence LSILL - Load LED's
The four user-programmable LEDs (L1-L4) on the standard keyboard are redefined on the Block/Edit keyboard version, and therefore this sequence is disabled. The new definitions are described in paragraph **A.5.8** of this Appendix.

## A.3 MAJOR OPERATIONAL MODES

The Block/Edit Mode option provides several modes of operation for the **ADM 36**, which are selectable from the keyboard or by host control sequences. The following paragraphs summarize the various operating modes and the associated interactions. The paragraphs are arranged such that those modes that are mutually exclusive are grouped together. The Power-ON/Reset condition for the various modes of operation is determined by the last saved set-up features stored in non-volatile memory.

### A.3.1 On-Line or Local Mode

When the **ADM 36** is in the On-Line Mode data being received by the terminal will be displayed or acted upon, as applicable. Data entered at the keyboard will be transmitted, transmitted and displayed, or displayed only, depending on the setting of Conversation or Block/Edit Mode, Full or Half Duplex, and Local Echo.

When the terminal is Off-Line (Local) all received data is ignored and no transmission can take place. Data typed on the keyboard is displayed or acted upon locally as applicable. Displayed data can be transmitted to printer while Off-Line.

## A.3.2 Block/Edit Mode or Conversation

The Block/Edit Mode feature of the ADM 36 allows the data to be formatted on the display prior to transmission. This is Block Mode operation and all data entered on the keyboard is routed to the display only — no transmission takes place. Therefore when Block Mode is set, the terminal is also effectively in Edit Mode, since the edit keys can now be used to manipulate the data on display. The editing operations supported include deleting and inserting lines or characters, and various erase and clear operations. The editing commands are performed relative to the cursor position within the top and bottom margins (scrolling region), which are user definable (refer to Control Sequences in Section 3). Scrolling is not permitted when a character or line feed is entered in the last position of the scrolling region.

The extent of the block of data that will be transmitted is determined by selections made in Set-Up Mode or Control Sequences from the host. The ENTER key is used to initate page transmissions, and, if Line Transmit Mode is enabled both the ENTER key and RETURN key will cause the line of data to be transmitted. When Block/Edit Mode is selected, received data will be accepted whether it is in blocks or on a character-by-character bases, as long as the terminal is On-Line.

When the terminal is operating in Conversation Mode all data that is typed on the keyboard is transmitted to the host as it is entered. The operation of Conversation Mode is further defined by the selection of Full-Duplex, Half-Duplex, or Local Echo Modes as follows:

### A.3.2.1 Full Duplex

Data that is entered on the keyboard is transmitted only. For data to be displayed it must be echoed from the host. The Communications Port can transmit and receive data simultaneously providing "Clear to Send" (CTS) is present and "Request to Send" (RTS) will be high as long as the terminal is On-Line.

### A.3.2.2 Half Duplex

In Half Duplex operation the communications port can only transmit or receive data, and the "direction" of the data transfer is governed by a line turnaround character, transmitted or received, which is used selectable. When the terminal is in Transmit Mode, RTS is turned ON, and, if CTS is ON, the terminal will unlock the keyboard and enable transmission until the turnaround character is transmitted to the host. At that point RTS is turned off and the keyboard is locked. The ADM 36 then receives data from the host until the host relinquishes line by transmitting the turnaround character, causing the terminal to re-enter Transmit Mode.

### A.3.2.3 Local Echo

When the host system does not provide a character echo in conversational protocols, this feature will allow the keyboard data to be transmitted and routed to the display. This feature is most typically used in Half-Duplex applications where simultaneous transmit and receive operation is not possible.

## A.3.3 Protect Mode

In addition to the visual attributes that can be assigned to display data, the data can be specified as protected through Set-Up Mode and Control Sequences. The control sequence to set a given visual attribute, or combination of attributes, will cause all subsequent data received to be highlighted as selected. If the "(Attribute) Protected" selection in Set-Up Mode is "ON" for any of the attributes on display, that data will be treated as protected data. Protected characters cannot be overwritten, erased, moved, or added to from the keyboard — only unprotected data may be edited from the keyboard. The host has the ability, through control sequences, to selectively edit protected data and reformat the display for transmission of unprotected data only.

**Note**

*Data displayed in the margins (non-scrolling region) is always treated as protected. Editing cannot be performed outside the scrolling region, and data will not be transmitted from outside the region during block sends.*

A group of characters with the same character attribute are referred to as a field. The use of editing keys while in a Protect Mode has the following results:

If, during normal typing, the cursor would have moved into a protected field, it will move forward to the beginning of the next unprotected field instead, where the character will be displayed.

Any attempt to enter data into a protected field will cause the bell tone. If there are no unprotected fields remaining on the display, the cursor is moved to the last display position and the character is discarded.

## A.4 SET-UP MODE ADDITIONS

When the Block/Edit Mode option is installed, there are several new features that are added to Set-Up B Mode selections, and, a Set-Up C Mode is added with additional features. Set-Up C Mode can be entered by sequencing forward or backward through Set-Up B Mode — Set-Up B and C Modes are continuous. Refer to **paragraph 2.6** for details on Set-Up Mode operation. **Table A-1** summarizes the additional Set-Up Mode features that are available, and **paragraphs A.4.1** through **A.4.20** detail the operation of each feature.

### A.4.1 Line Protocol

The Line Protocol feature allows the **ADM 36** to operate in either Full Duplex (FDX as a standard model), or, Half Duplex with code turnaround (HDX-B) protocol applications. When HDX-B is selected, the turnaround character that will be used is selectable in Set-Up Mode, or by a Host Control Sequence.

### A.4.2 Turnaround Char/EOB

The character to be used for turnaround when HDX-B operation is enabled, and the character that will be used for signifying the end of a transmission block in Block/Edit Mode is selected with the Turnaround Char/EOB feature. The following characters may be selected for desired operation:

NONE
FF (Form Feed - 0C Hex)
ETX (End of Text - 03 Hex)
EOT (End of Transmission - 04 Hex)
CR (Carriage Return - 0D Hex)
DC3 (X-OFF - 13 Hex)

### A.4.3 Auto Turnaround

When Auto Turnaround is ON, pressing the RETURN key causes the automatic transmission of the turnaround character when the terminal is operating in HDX-B Mode.

### A.4.4 Initial Direction

This feature selects the Power-Up/Reset communications direction when operating in HDX-B Mode. The **ADM 36** can be set for either Receive, or Transmit Mode of operation at initialization.

### A.4.5 Block Edit Mode

When set to ON the **ADM 36** will operate as a Block Mode terminal. Data typed on the keyboard will be sent to the display only. Transmission will take place only when commanded from the keyboard or remotely from the host. This allows the data on display to be edited prior to transmission. Keys are provided to perform the various editing operations, as well as commands from the host. When the Block Edit Mode is turned OFF, the **ADM 36** operates as a conversational terminal, transmitting character-by-character, as data is entered.

### A.4.6 Edit Key

This Set-Up feature selects the operation of the "EDIT" key. When set to "IMMEDIATE", the terminal makes the transition between Conversation and Block Mode (Block/Edit

## Table A-1. Additional Set-Up Mode Feature Summary

| FEATURE | OPTIONS (Factory Default Settings are indicated in in Bold Face type) |
|---|---|
| **SET-UP B** (added features) | |
| Line Protocol | **FDX** or HDX-B |
| Turnaround Char/EOB | **NONE**, Form Feed, ETX, EOT, CR, DC3, Reserved, or Reserved |
| Auto Turnaround | **OFF** or ON |
| Initial Direction | Receive or **TRANSMIT** |
| **SET-UP C** | |
| Block Edit Mode | **OFF** or ON |
| Edit Key | Deferred or **IMMEDIATE** |
| Guarded Area Transmit | Unprotect or **ALL** |
| Erasure Mode | Unprotect or **ALL** |
| Space Compression | **OFF** or ON |
| Line Transmit | **OFF** or ON |
| Transmit Termination | Partial or **FULL** |
| Transmit Execution | Deferred or **IMMEDIATE** |
| Bold Protected | **OFF** or ON |
| Underline Protected | **OFF** or ON |
| Blink Protected | **OFF** or ON |
| Reverse Protected | **OFF** or ON |
| Reduced Protected | **OFF** or ON |
| Normal Protected | **OFF** or ON |
| End Of Line Enable | OFF or **ON** |
| End Of Line Character | **CR/CRLF** or RS |

Mode ON or OFF) immediately when the SHIFT and EDIT keys are pressed. When set to deferred, pressing the SHIFT and EDIT keys causes the **ADM 36** to transmit the Block/Edit Mode set or reset control sequence. When the host echos the control sequence, the transition between modes takes place.

## A.4.7 Guarded Area Transmit

This Set-Up feature determines whether or not guarded fields are to be transmitted in a block tranmission, or to be replaced by a record separater (RS-Hex 1E).

When set to "ALL", all fields are transmitted regardless of protection. When "UNPROTEC" is set only unprotected fields are transmitted, and a record separator is transmitted every time an attribute change is encountered.

## A.4.8 Erasure Mode

This Set-Up feature determines whether a screen erase command from the host erases "ALL" data or "UNPROTECTED" data only. The extent of the erase function depends on the control sequence that was received.

## A.4.9 Space Compression

Selecting this Set-Up feature causes the trailing blanks of each field on a line to be omitted from a block transmission. Instead, the line is transmitted with each field separated by a record separator (RS-Hex 1E). When set to OFF, all data on the display will be transmitted exactly as presented, including spaces.

## A.4.10 Line Transmit

This Set-Up feature enables a line of data to be transmitted rather than a full or partial page when Block/Edit Mode is set. The line is transmitted from beginning to end, regardless of the position of the cursor in the line. When Line Transmit is "ON" the line at the cursor is transmitted by pressing the ENTER key or the RETURN key. If Line Transmit is OFF, the RETURN key performs the normal CR or CR/LF function as selected, and the ENTER key will cause a full or partial page to be transmitted, as selected in Set-Up Mode or by Control Sequences.

## A.4.11 Transmit Termination

The Transmit Termination feature determines if a block of characters transmitted to the computer is a full or partial page. Selecting full page transmits all characters within the margins (see "Set Top and Bottom Margins" - **Section 3**). Partial page being selected transmits the characters between a partial page marker and the cursor. If a partial page marker is not present, the top margin is used. The marker (which is not displayed) is automatically positioned at the last character transmitted. The transmission of data is initiated by using the ENTER key.

## A.4.12 Transmit Execution

The Transmit Execution feature determines how the ENTER key operates when Block/Edit Mode is ON. When deferred is selected, the terminal transmits a control sequence to request a block character transmission. When the computer is ready to receive the characters, it transmits a control sequence to initiate transmission. When immediate is selected, the terminal transmits the characters when the ENTER key is pressed.

## A.4.13 Bold Protected

When selected "ON", this feature specifies that characters with the Bold Attribute are protected. Protected characters can not be edited from the keyboard, and may be guarded from erasure or transmission, depending upon other features in Set-Up Mode.

## A.4.14 Reduced Protected

When selected "ON", this feature specifies that characters with the Reduced Intensity Attribute are protected. Protected characters can not be edited from the keyboard, and may be guarded from erasure or transmission, depending upon other features in Set-Up Mode.

### A.4.15 Underline Protected

When selected "ON", this feature specifies that characters with the Underlined Attribute are protected. Protected characters can not be edited from the keyboard, and may be guarded from erasure or transmission, depending upon other features in Set-Up Mode.

### A.4.16 Blink Protected

When selected "ON", this feature specifies that characters with the Blinking Attribute are protected. Protected characters can not be edited from the keyboard, and may be guarded from erasure or transmission, depending upon other features in Set-Up Mode.

### A.4.17 Reverse Protected

When selected "ON", this feature specifies that characters with the Reverse Video Attribute are protected. Protected characters can not be edited from the keyboard, and may be guarded from erasure or transmission, depending upon other features in Set-Up Mode.

### A.4.18 Normal Protected

When selected "ON", this feature specifies that characters with Normal Video - No Bold, Reduced Intensity, Underline, Blink, or Reverse Video are protected. Protected characters can not be edited from the keyboard, and may be guarded from erasure or transmission, depending upon other features in Set-Up Mode.

### A.4.19 End Of Line Enable

This Set-Up feature enables the transmission of an end of line character when set to "ON". At the end of each line transmitted during a block send, a character selected in Set-Up Mode is transmitted along with the display data. When OFF, no end of line character is transmitted.

### A.4.20 End Of Line Character

This feature selects the End of Line Character to be used if end of line enable is ON. When CR/CRLF is selected a CR (0D Hex); and a "LF" (0A Hex) if NEW LINE is ON, is transmitted at the end of each line.

If the end of line character is selected as "RS" an RS character (1E Hex) is transmitted at the end of each line.

**Note**

*If the Turnaround/EOB Char is selected as "CR" then the end of line character will always be an "RS" regardless of this set-up feature setting.*

## A.5 KEYBOARD OPERATION

To facilitate editing and transmit keyboard operations, the Block/Edit Mode option provides a special keycap set with appropriate legends. The seven keys with multiple legends are located on the numeric keypad keys, as indicated in **figure A-1**. The legends engraved yellow are used in Block/Edit Mode, legends in parentheses indicate the shifted function. White legends are as described in **Section 3**, as well as the control sequences that are transmitted in the various operational modes.

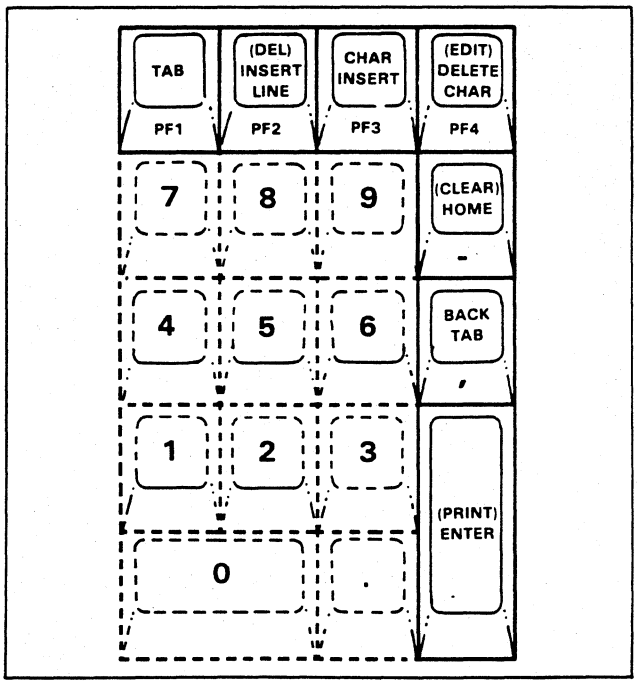


*Figure A-1. Additional Numeric Keypad Key Legends*

### A.5.1 TAB
### PF1

In Block/Edit Mode, pressing the TAB key will cause the cursor to tab over to the beginning of the next unprotected field, or the next tab stop in an unprotected field, whichever occurs first. If neither is found, the cursor will stop at the lower right margin or end of display.

If the **ADM 36** is in Conversation Mode, the key operates as the PF1 function key.

### A.5.2 (DEL)
### INSERT LINE
### PF2

In Block/Edit Mode, this key (unshifted) inserts the erased line at the cursor position and moves all lower lines down one line. Shifting this key will delete the current line and move all lower lines up one line, presenting an erased line at the bottom margin. If the line with the cursor contains a protected field, then a tone will sound and neither function will be performed. Note that a line being inserted has the same attributes as the first line moved down, and, the last line that is added at the bottom of the screen when deleting lines has the same attributes as the last line moved up. A protected field on a lower line will not move during either operation.

If the **ADM 36** is in Conversation Mode, this key operates as the PF2 function key.

### A.5.3 CHAR INSERT
### PF3

This key, when the **ADM 36** is in Block/Edit Mode, alternately sets or reset Insert Mode. When Insert Mode is set, the "Insert" indicator on the keyboard will be illuminated. In Insert Mode, data entered will move all characters in the field to the right, losing any character that advances to the end of the field or line. If the cursor is in a protected field, a tone will sound and the cursor moves to the next unprotected field, with no Insert operation taking place.

If the **ADM 36** is in Conversation Mode, this key operates as the PF3 function key.

### A.5.4 (EDIT)
### DELETE CHAR
### PF4

This key (shifted) alternately sets or resets Block/Edit Mode (Conversation or Block Mode). If the "Edit Key" Set-Up feature, or Control Sequence has been set to "Deferred", then the appropriate Set/Reset Mode control sequence (LSIEDM) is sent to the host, and the change of state will occur when the host echoes the sequence. When Block/Edit Mode is set, the "Edit" indicator on the keyboard will be illuminated.

While in Block/Edit Mode, this key (unshifted) deletes characters from a field. The character at the cursor position is erased and all characters to the right or the cursor move to the left one position, presenting a blank location at the end of the field or line. If the field is protected, a tone will sound and the cursor will move to the next unprotected field. Protected fields will not be moved by Delete Character commands.

If the **ADM 36** is in Conversation Mode, this key operates as the PF4 function key.

### A.5.5 (CLEAR)
### HOME
### -

In Block/Edit Mode, pressing the key (unshifted) will move the cursor to the upper left corner of the scrolling region, or upper left corner of the display, depending on the state of the applicable Set-Reset Mode control sequence (LSIOM). Shifting this key will cause the screen to clear only the unprotected data and the cursor to move to Home.

If the **ADM 36** is in Conversation Mode, this key operates as - (minus).

### A.5.6 BACK TAB
### ,

In Block/Edit Mode this key causes the cursor to tab back to the previous tab setting in an

unprotected field, or, the beginning of the previous unprotected field, whichever occurs first. If no tab stops or protected fields are encountered, then the cursor will home to the upper left corner of the scrolling region, or display, depending on the state of the applicable Set/Reset Mode control sequence (LSIOM).

If the **ADM 36** is in Conversation Mode, this key operates as , (comma).

## A.5.7 (PRINT) ENTER

In Block/Edit Mode the unshifted ENTER key is used to initiate block transmission. The extent of the block transferred is dependent on the selection of Line Transmit Mode (LSILTM), and Transfer Termination Mode (TTM), from either Set-Up Mode or by a Host Control Sequence. If the Transmit Execution feature (LSITEM or Set-Up selection) is set to "Deferred", the ENTER key will transmit the "Set Transmit State" (STS) control sequence to the host. The block of data will be sent only when the host issues a Send Block (LSISB) control sequence in response.

When Conversation Mode is set, the ENTER key sends either a CR, or CR and LF control code(s) as selected in Set-Up Mode or by a control sequence. The shifted ENTER key initiates the various print operations, as described in **Section 3** of the manual, in all modes of terminal operation.

The details of the two types of transmit functions that can be initiated by the ENTER key are as follows:

### A.5.7.1 Line Transmit

When the Line Transmit Mode function is set the **ADM 36** will transmit a line of data as follows:

PRESS ENTER - (or the RETURN key)
The "KBD LOCKED" indicator is turned on and the keyboard is locked until the transmission is complete. The cursor moves to either the first column of the current line, or the first column of the next line - depending on the selection of Line Feed/New Line Mode (Set-Up Mode or Control Sequence - LNM). If the cursor is at the bottom of the scrolling region, the cursor always moves to the first column of the current line.

### A.5.7.2 Page Transmit (Block Transmission)

When the Line Transmit Mode function is Reset, the **ADM 36** will transmit either a full or partial page, depending on the Transfer Terminal Mode function selected, as follows:

PRESS ENTER
The "KBD LOCKED" indicator is turned on, and the keyboard is locked until transmission is complete. The cursor does not change position.

**Note**

*To clear a pending transmission, cancel a transmission in progress, or unlock the keyboard, enter then exit Set-Up Mode.*

## A.5.8 Additional Indicators

The four user defined indicators, L1-L4, on the standard **ADM 36** keyboard are redefined when the Block/Edit Mode option is installed. The ON-LINE and KBD LOCKED indicator functions are unchanged from the standard terminal. The four added indicators consist of CTS, DSR, INSERT and EDIT, and are used as follows:

### A.5.8.1 CTS Indicator

The CTS indicator will turn ON when Clear To Send - CTS RS-232C Signal Level is in the true state. If Clear To Send is false, data transmission will be inhibited. If the input is allowed to "float" the level will be sensed as true.

### A.5.8.2 DSR Indicator

The Data Set Ready - DSR RS-232C Signal Level will cause the DSR indicator to turn ON when the level is true. DSR is normally used to indicate the ability of the local modem or data set to transfer data. If the input is allowed to "float", the level will be sensed as true.

### A.5.8.3 Insert Indicator

The selection of Insert Mode, while operating in Block/Edit Mode, will cause the indicator to illuminate. The ON state indicates that insert operations may be performed as described in **paragraph A.5.3.**

### A.5.8.4 Edit Indicator

The Edit Indicator will turn ON when the Block/Edit Mode of operation is selected in Set-Up Mode or by a control sequence. When illuminated, the Block Mode and Edit operations described in **paragraph A.3.2** can be performed.

## A.6 ADDITIONAL CONTROL SEQUENCES

When the Block/Edit Mode option is installed the ANSI compatible control sequences listed in **Table 3-11** are extended to support the added features. **Table A-2** summarizes the control sequences that have been added and the following paragraphs provide details of the operation.

**Table A-2. Additional Control Sequence Summary**

| FUNCTION GROUP | DESCRIPTION | MNEMONIC | CONTROL SEQUENCE |
|---|---|---|---|
| Cursor Functions | Back Tab | PU2 | ESC R |
| Screen Control and | Set Protected Attribute | LSIPRO* | ESC [ Ps; . . .Ps |
| Set/Reset Mode | Reset Mode | RM* | ESC [ Ps; . . .Psl |
| | Set Mode | SM* | ESC [ Ps; . . .Psh |
| (See Table A-3 for a list of features applicable to Set/Reset Mode Control Sequence) | | | |
| | Select Turnaround/ End of Block Character | LSITEBC* | ESC [ Ps |
| Output and Print | Send Block | LSISB | ESC 5 |
| | Set Transmit State | STS | ESC S |

* Also selectable in Set-Up Mode

### A.6.1 PU2 - BACK TAB (LSI Private)

ESC R

The BACK TAB (PU2) control sequence causes the cursor to move back to the:

Start of the unprotected field with the cursor

Start of the previous unprotected field

Previous Tab stop (selected in Set-Up A Mode)

The top margin (beginning of the scrolling region)

### A.6.2 LSIPRO - Set Protected Attribute (LSI Private)

ESC [ Ps;...Ps }

The visual attribute, or combinations, that will be treated as protected data, are specified by the Set Protected attribute control sequence. The selective parameter Ps specifies which attributes are used. Protected characters can not be erased, moved, changed, or overwritten by keyboard entries. Protected data can be handled uniquely by the host during Edit and Transmit operations.

Parameters Ps Values

| | |
|---|---|
| 0 | No Protection |
| 1 | Bold Protection |
| 2 | Reduced Protection |
| 4 | Underline Protection |
| 5 | Blink Protection |
| 7 | Reverse Protection |
| 254 | Normal Protection |

Example:

ESC [ 2;7 } - Causes all reduced intensity and reverse video data to be treated as protected data.

### A.6.3 SM/RM - Set/Reset Mode Sequences

ESC [ Ps;...Ps h Set Mode
ESC [ Ps;...Ps l Reset Mode

The Set/Reset Mode control sequences cause various operational modes to be set or reset depending on the sequence and selective parameter used. **Table A-3** summarizes the values for Ps, and the following paragraphs detail the action for each parameter.

#### A.6.3.1 GATM - Guarded Area Transmit Mode

ESC [ 1 h - Transmit All Data in a Block Send
ESC [ 1 l - Transmit only unprotected data in a block send

The **ADM 36** can be set to transmit data on a page or the unprotected data only. By sending only unprotected data, the overall throughput of the system can be improved. For each protected field that is encountered during transmission, the **ADM 36** will insert a record separator code (RS-1E Hex) in the data stream. When data is transmitted to the printer, spaces are inserted for each protected character encountered.

#### A.6.3.2 TTM - Transmit Termination Mode

ESC [ 16 h - Transmit Full Page in a Block Send
ESC [ 16 l - Transmit Partial Page in a Block Send

The set state of the TTM parameter will cause the entire scrolling region to be transmitted in a block transmission. When reset, the block that will be transmitted is from the partial page marker (not visable on the display) to the cursor. If the marker is not present, or the cursor is before the marker, the start point is the top margin. The marker will be placed at the end-point of the previous transmission.

#### A.6.3.3 LSIEDM - Block/Edit Mode (LSI Private)

ESC [ ?10h - Set Line Transmit Mode
ESC [ ?11l - Set Page Transmit Mode

The **ADM 36** can operate interactively or in Block/Edit Mode. When LSIEDM is set all keyboard editing features are available and data will be transmitted in blocks as previously indicated. In the Reset state the

**Table A-3. Additional Set/Reset Mode Control Sequence Parameters**

| PARAMETER Ps | SET MODE | RESET MODE | MNEMONIC |
|---|---|---|---|
| 1 | Guarded Area - Transmit - All | Guarded Area - Transmit - Unprotected | GATM* |
| 16 | Block - Full Page | Block - Partial | TTM* |
| ?10 | Block/Edit Mode | Conversation Mode | LSIEDM* |
| ?11 | Line Transmit | Page Transmit | LSILTM* |
| ?13 | Set Space Compression | Reset Space Compression | LSISCFDM* |
| ?14 | Transmit Key - Immediate | Transmit Key - Deferred | LSITEM* |
| ?16 | Edit Key - Immediate | Edit Key - Deferred | LSIEKEM* |

* Also selectable in Set-Up Mode

terminal will not perform keyboard editing, and data will be transmitted as it is entered, conversationally, character-by-character.

### A.6.3.4 LSILTM - Line Transmit Mode (LSI Private)

ESC [ ?10h - Set Line Transmit Mode
ESC [ ?11l - Set Page Transmit Mode

When LSILTM is set, either the ENTER or RETURN key will cause the active line to be transmitted. In the Reset state only the ENTER key initiates transmission, and the extent - Full or Partial Page - is determined by the Transmit Termination feature. The action of the Transmit (ENTER) key may be immediate or deferred, as selected by the Transmit Execution feature.

### A.6.3.5 LSISCFDM - Space Compression/Field Delimiter Mode (LSI Private)

ESC [ ?13h - Set Space Compression
ESC [ ?13l - Reset Space Compression

When set this feature causes trailing spaces at the end of a field to be supressed during transmission. All fields transmitted are terminated with a single record separator code (RJ-1E Hex), except the last field on a line which is terminated with the end of line character selected in Set-Up Mode. In the Reset state data is transmitted as it appears on the display, no field delimitation is included, and trailing spaces are included.

### A.6.3.6 LSITEM - Transmit Execution Mode (LSI Private)

ESC [ ?14h - Transmit Key Immediate
ESC [ ?14l - Transmit Key Deferred

When the mode is set, the ENTER (LSILTM) key (and RETURN key if Line Transmit (LSILTM) is set) will immediately initiate the transmission of data when pressed. If Transmit Execution Mode is Reset, pressing the ENTER key will cause only the Set Transmit State (STS) control sequence to be transmitted to the host. Transmission is deferred, and, until the Send Block (LSISB) control sequence is received, no further action takes place. Upon receipt of the Send Block

control sequence the terminal will transmit the block of data as specified by the appropriate mode settings.

### A.6.3.7 LSIEKEM - Edit Key Execution Mode (LSI Private)

ESC [ ?16h - Edit Key Immediate
ESC [ ?16l - Edit Key Deferred

If this mode is set, pressing the SHIFT/EDIT key will cause the terminal to alternate between Conversation and Block immediately for each keystroke. When Reset, pressing the SHIFT/EDIT key will transmit the Edit Mode control sequence to the host. The change of state will then take place only when the host echos the command.

### A.6.4 LSITEBC - Select Turn-around/End Of Block Character (LSI Private)

ESC [ Ps ¦

This control sequence provides a means of selecting the character that will be used for Half-Duplex (HDX-B) turnaround operation, or, if the terminal is in Block Mode, the character selected will be used as as the End of Block delimiter. The character to be used is established by the value of selective parameter Ps.

Parameter Ps Value

| | |
|---|---|
| 0 | None |
| 1 | Form Feed (0C Hex) |
| 2 | ETX (03 Hex) |
| 3 | EOT (04 Hex) |
| 4 | CR (0D Hex) |
| 5 | DC3 (13 Hex) |

Example:
ESC [ 3 ¦ - Selects the EOT character to become the Turnaround or End of Block character.

### A.6.5 LSISB - Send Block (LSI Private)

ESC 5

When received, the Send Block control sequence causes the **ADM 36** to transmit the block of data that has been defined by the applicable features in Set-Up Mode, or equivalent control sequences.

### A.6.6 STS - Set Transmit State

ESC S

The Set Transmit State control sequence is sent by the **ADM 36** when the ENTER key (and RETURN key if Line Transmit is selected) is pressed and the Transmit Execution feature is set to Deferred. No other transmission takes place until the Send Block control sequence is received by the **ADM 36**.

# APPENDIX B
# ADM 36I KEYBOARD

The ADM 36I keyboard is an addition to the standard **ADM 36** that offers a 94 key layout similiar to the IBM 3277 ASCII B. All **ADM 36** operation has been retained plus function keys and special keys have been added.

The keyboard layout displayed in **figure B-1** is separated into five clusters.

1. The main alpha/numeric area is typewriter style with a locking shift lock.
2. Special function pad includes erase, clear and control keys.
3. Function key cluster has twelve function keys (DEC type) plus escape, print, setup and caps lock.
4. Cursor control pad includes four cursor keys, rubout, PA1, and PA2.
5. The twelve key numeric pad includes . and - . .

The ADM 36I maintains the standard **ADM 36** "full duplex" operation; therefore, each key sends a one, two or three key sequence, causing no local function. The only non-transmit keys are caps lock, shift lock, control, print and shift/"test request". Print key (unshifted) causes a page print of the limits defined in Set-Up mode. Test request, when shifted, enables and disables Set-Up mode, for specific operation mode selections.

The following keyboard code table describes the actual ASCII characters transmitted by each key. Keys are listed by position number defined by **figure B-1**. If both shift and caps lock are enabled, shift lock column describes selection.

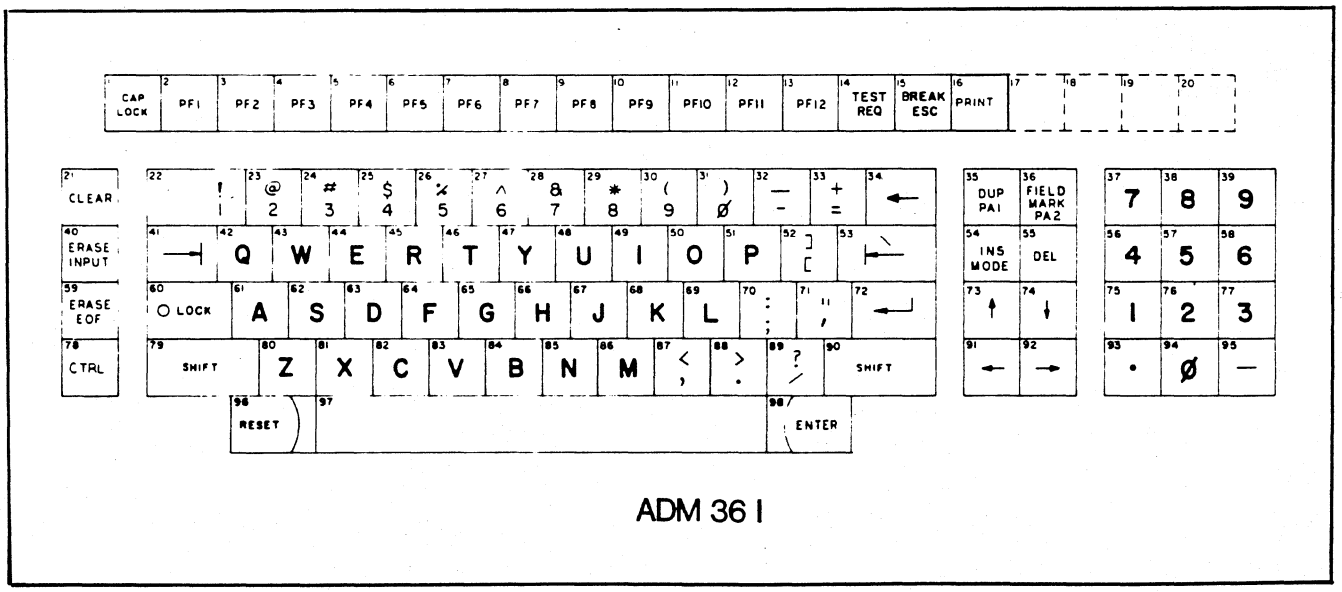


*Figure B-1. ADM 36I Keyboard Layout.*

## Table B-1. Keyboard Code

| KEY POS | LEGEND | NORM | SHIFT | CAP LOCK |
|---|---|---|---|---|
| 1 | CAP LOCK | (SHIFTS ALPHA KEYS TO UPPER CASE) (VALUES ARE HEX) | | |
| 2 | PF1 | PF50 | PF60 | PF50 |
| 3 | PF2 | PF51 | PF61 | PF51 |
| 4 | PF3 | PF52 | PF62 | PF52 |
| 5 | PF4 | PF53 | PF63 | PF53 |
| 6 | PF5 | PF54 | PF64 | PF54 |
| 7 | PF6 | PF55 | PF65 | PF55 |
| 8 | PF7 | PF56 | PF66 | PF56 |
| 9 | PF8 | PF57 | PF67 | PF57 |
| 10 | PF9 | PF58 | PF68 | PF58 |
| 11 | PF10 | PF59 | PF69 | PF59 |
| 12 | PF11 | PF5A | PF6A | PF5A |
| 13 | PF12 | PF5B | PF6B | PF5B |
| 14 | TEST REQ | PF5C | SETUP MODE | PF5C |
| 15 | ESC/BREAK | 1B | SHORT BREAK | 1B |
| 16 | PRINT | LOCAL PRINT | 1B7C | LOCAL PRINT |
| 21 | CLEAR | PF5F | PF6C | PF5F |
| 22 | 1! | 31 | 21 | 31 |
| 23 | 2@ | 32 | 40 | 32 |
| 24 | 3# | 33 | 23 | 33 |
| 25 | 4$ | 34 | 24 | 34 |
| 26 | 5% | 35 | 25 | 35 |
| 27 | 6 | 36 | 5E | 36 |
| 28 | 7& | 37 | 26 | 37 ERASE ENTRIES |
| 29 | 8* | 38 | 2A | 38 ( HT ) |
| 30 | 9( | 39 | 28 | 39 |

UNDERLINE KEYS DO NOT REPEAT WHEN HELD DOWN

PF = ESC O SEQUENCE

## Table B-1. Keyboard Code (continued)

| KEY POS | LEGEND | NORM | SHIFT | CAP LOCK |
|---|---|---|---|---|
| 31 | 0) | 30 | 29 | 30 |
| 32 | -_ | 2D | 5F | 2D |
| 33 | =+ | 3D | 2B | 3D |
| 34 | ← | 08 | 08 | 08 |
| 35 | DUP/PA1 | PF5D | 1B78 | PF5D |
| 36 | FIELDMARK | PF5E | 1B79 | PF5E |
| 37 | 7 | 37 | 37 | 37 |
| 38 | 8 | 38 | 38 | 38 |
| 39 | 9 | 39 | 39 | 39 |
| 40 | ERASE INPUT | 1B73 | 1B74 | 1B73 |
| 41 | →\| | 09 | 1B77 | 09 |
| 42 | Q | 71 | 51 | 51 |
| 43 | W | 77 | 57 | 57 |
| 44 | E | 65 | 45 | 45 |
| 45 | R | 72 | 52 | 52 |
| 46 | T | 74 | 54 | 54 |
| 47 | Y | 79 | 59 | 59 |
| 48 | U | 75 | 55 | 55 |
| 49 | I | 69 | 49 | 49 |
| 50 | O | 6F | 4F | 4F |
| 51 | P | 70 | 50 | 50 |
| 52 | ] [ | 5B | 5D | 5B |
| 53 | \|← | 1B70 | 5C | 1B70 TAB LEFT |
| 54 | INS MODE | 1B71 | 1B72 | 1B71 |
| 55 | DEL | 7F | 7F | 7F RUBOUT |
| 56 | 4 | 34 | 34 | 34 |
| 57 | 5 | 35 | 35 | 35 |

UNDERLINE KEYS DO NOT REPEAT WHEN HELD DOWN

PF = ESC ) SEQUENCE

## Table B-1. Keyboard Code (continued)

| KEY POS | LEGEND | NORM | SHIFT | CAP LOCK |
|---|---|---|---|---|
| 58 | 6 | 36 | 36 | 36 |
| 59 | ERASE EOF | 1B75 | 1B76 | 1B75 |
| 60 | LOCK | (LOCAL FUNCTION TYPEWRITER SHIFT) | | |
| 61 | A | 61 | 41 | 41 |
| 62 | S | 73 | 53 | 53 |
| 63 | D | 64 | 44 | 44 |
| 64 | F | 66 | 46 | 46 |
| 65 | G | 67 | 47 | 47 |
| 66 | H | 68 | 48 | 48 |
| 67 | J | 6A | 4A | 4A |
| 68 | K | 6B | 4B | 4B |
| 69 | L | 6C | 4C | 4C |
| 70 | ; : | 3B | 3A | 3B |
| 71 | ' " | 27 | 22 | 27 |
| 72 | ←\| | OD | OD | OD CARRIAGE RETURN |
| 73 | (UP) | 1B[A | 1B[A | 1B[A CURSOR UP |
| 74 | (DOWN) | 1B[B | 1B[B | 1B[B CURSOR DOWN |
| 75 | 1 | 31 | 31 | 31 |
| 76 | 2 | 32 | 32 | 32 |
| 77 | 3 | 33 | 33 | 33 |
| 78 | CONTROL | NO CHARACTER IS TRANSMITTED | | |
| 79 | SHIFT | (SHIFT - LOCAL FUNCTION) | | |
| 80 | Z | 7A | 5A | 5A |
| 81 | X | 78 | 58 | 58 |
| 82 | C | 63 | 43 | 43 |
| 83 | V | 76 | 56 | 56 |
| 84 | B | 62 | 42 | 42 |

UNDERLINED KEYS DO NOT REPEAT WHEN HELD DOWN

PF = ESC O SEQUENCE

## Table B-1. Keyboard Code (continued)

| KEY POS | LEGEND | NORM | SHIFT | CAP LOCK |
|---|---|---|---|---|
| 85 | N | 6E | 4E | 4E |
| 86 | M | 6D | 4D | 4D |
| 87 | < , | 2C | 3C | 2C |
| 88 | > . | 2E | 3E | 2E |
| 89 | / ? | 2F | 3F | 2F |
| 90 | SHIFT | (SHIFT - LOCAL FUNCTION) | | |
| 91 | (LEFT) | 1B[D | 1B[D | 1B[D CURSOR LEFT |
| 92 | (RIGHT) | 1B[C | 1B[C | 1B[C CURSOR RIGHT |
| 93 | . | 2E | 2E | 2E |
| 94 | 0 | 30 | 30 | 30 |
| 95 | – | 2D | 2D | 2D |
| 96 | RESET | 1B7A | 1B7A | 1B7A RESET |
| 97 | (SPACE BAR) | 20 | 20 | 20 |
| 98 | TRANSMIT | 1F | 1F | 1F |

UNDERLINED KEYS DO NOT REPEAT WHEN HELD DOWN

PF = ESC O SEQUENCE

The ADM 36I keyboard also provides interfaces for security key lock and credit card reader.

Keylock transmits ESCape { when the lock is turned on and ESCape ~ when turned off. The normally closed contacts are connected to J3 pins 1 and 2, a common AMP header with .1" centers.

The card reader transmits a forty character message, read from track two of a standard credit card. The keyboard reads and buffers the message until complete. The keyboard will beep when it detects a bad read. Some message will be transmitted in either event so that the host computer is aware of a read attempt. When complete, or timeout occurs, the message is sent to the Modem port in the following format.

CARD MESSAGE FORMAT:

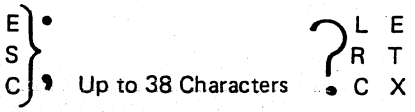


Characters maybe 0 1 2 3 4 5 6 7 8 9 : < =

The card reader is American Magnetics Modem 40 or 50. Interface is thru J2, a standard AMP eight conductor header with .1" centers.

Signals are as follows:

| PIN | SIGNAL |
|---|---|
| 1 | Data (TTL Levels) |
| 2 | Strope |
| 3 | Card Switch N.O. Contact |
| 4 | Switch Return (Ground in Keyboard) |
| 5 | N C |
| 6 | Chassis Ground |
| 7 | +5V |
| 8 | Logic Ground |

The firmware in the main **ADM 36** logic board must be updated with the five EPROMS.

# APPENDIX C
# OPERATORS
# QUICK REFERENCE
# CHARTS

# ASCII CONTROL CODE CHART

| BITS B7 B6 B5 / B4 B3 B2 B1 | 0 0 0 | 0 0 1 | 0 1 0 | 0 1 1 | 1 0 0 | 1 0 1 | 1 1 0 | 1 1 1 |
|---|---|---|---|---|---|---|---|---|
| | CONTROL | | NUMBERS SYMBOLS | | UPPER CASE | | LOWER CASE | |
| 0 0 0 0 | 0 NUL 0 0 | 20 DLE 10 16 | 40 SP 20 32 | 60 0 30 48 | 100 @ 40 64 | 120 P 50 80 | 140 ` 60 96 | 160 p 70 112 |
| 0 0 0 1 | 1 SOH 1 1 | 21 DC1 11 17 | 41 ! 21 33 | 61 1 31 49 | 101 A 41 65 | 121 Q 51 81 | 141 a 61 97 | 161 q 71 113 |
| 0 0 1 0 | 2 STX 2 2 | 22 DC2 12 18 | 42 " 22 34 | 62 2 32 50 | 102 B 42 66 | 122 R 52 82 | 142 b 62 98 | 162 r 72 114 |
| 0 0 1 1 | 3 ETX 3 3 | 23 DC3 13 19 | 43 # 23 35 | 63 3 33 51 | 103 C 43 67 | 123 S 53 83 | 143 c 63 99 | 163 s 73 115 |
| 0 1 0 0 | 4 EOT 4 4 | 24 DC4 14 20 | 44 $ 24 36 | 64 4 34 52 | 104 D 44 68 | 124 T 54 84 | 144 d 64 100 | 164 t 74 116 |
| 0 1 0 1 | 5 ENQ 5 5 | 25 NAK 15 21 | 45 % 25 37 | 65 5 35 53 | 105 E 45 69 | 125 U 55 85 | 145 e 65 101 | 165 u 75 117 |
| 0 1 1 0 | 6 ACK 6 6 | 26 SYN 16 22 | 46 & 26 38 | 66 6 36 54 | 106 F 46 70 | 126 V 56 86 | 146 f 66 102 | 166 v 76 118 |
| 0 1 1 1 | 7 BEL 7 7 | 27 ETB 17 23 | 47 ' 27 39 | 67 7 37 55 | 107 G 47 71 | 127 W 57 87 | 147 g 67 103 | 167 w 77 119 |
| 1 0 0 0 | 10 ← BS 8 8 | 30 CAN 18 24 | 50 ( 28 40 | 70 8 38 56 | 110 H 48 72 | 130 X 58 88 | 150 h 68 104 | 170 x 78 120 |
| 1 0 0 1 | 11 TAB HT 9 9 | 31 EM 19 25 | 51 ) 29 41 | 71 9 39 57 | 111 I 49 73 | 131 Y 59 89 | 151 i 69 105 | 171 y 79 121 |
| 1 0 1 0 | 12 ↓ LF A 10 | 32 SUB 1A 26 | 52 * 2A 42 | 72 : 3A 58 | 112 J 4A 74 | 132 Z 5A 90 | 152 j 6A 106 | 172 z 7A 122 |
| 1 0 1 1 | 13 ↑ VT B 11 | 33 ESC 1B 27 | 53 + 2B 43 | 73 ; 3B 59 | 113 K 4B 75 | 133 [ 5B 91 | 153 k 6B 107 | 173 { 7B 123 |
| 1 1 0 0 | 14 → FF C 12 | 34 FS 1C 28 | 54 , 2C 44 | 74 < 3C 60 | 114 L 4C 76 | 134 \ 5C 92 | 154 l 6C 108 | 174 ¦ 7C 124 |
| 1 1 0 1 | 15 RTN CR D 13 | 35 GS 1D 29 | 55 − 2D 45 | 75 = 3D 61 | 115 M 4D 77 | 135 ] 5D 93 | 155 m 6D 109 | 175 } 125 |
| 1 1 1 0 | 16 SO E 14 | 36 HOME RS 1E 30 | 56 . 2E 46 | 76 > 3E 62 | 116 N 4E 78 | 136 ^ 5E 94 | 156 n 6E 110 | 176 ~ 7E 126 |
| 1 1 1 1 | 17 SI F 15 | 37 NEW LINE US 1F 31 | 57 / 2F 47 | 77 UNL ? 3F 63 | 117 O 4F 79 | 137 _ 5F 95 | 157 o 6F 111 | 177 (DEL) RUBOUT 7F 127 |

**KEY**

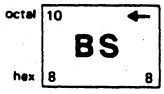


Get familiar with ASCII and LSI control codes with the help of this handy table.

# SET-UP MODE KEYS SUMMARIZED

| KEY | SET-UP A MODE | SET-UP B MODE |
|---|---|---|
| SET-UP | Exit SET-UP mode | Exit SET-UP mode |
| 2 (Set/clear tab) | Set/Clear tab at current position | Ignored |
| 3 (Clear all tabs) | Clear all tabs | Ignored |
| 4 (Line/local) | Go to SET-UP B - toggle line/local | Toggle line/local |
| 5 (Set-up A/B) | Go to SET-UP B | Go to SET-UP A |
| 6 (Toggle) | Ignored | Change feature setting |
| 7 (Transmit speed) | Go to SET-UP B transmit baud rate | Change transmit baud rate |
| 8 (Receive speed) | Go to SET-UP B receive baud rate | Change receive baud rate |
| 9 (80/132 columns) | Toggle 80/132 | Toggle 80/132 |
| 0 (Reset) | Resets terminal | Resets terminal |
| A (Shifted) | Ignored | Enter Answerback mode |
| R (Shifted) | Recall features from NVR | Recall features from NVR |
| S (Shifted) | Save features to NVR | Save features to NVR |
| T (Shifted) | Recall default tabs | Ignored |
| D (Shifted) | Recall default features | Recall default features |
| ↑ | Increase brightness | Increase brightness |
| ↓ | Decrease brightness | Decrease brightness |
| → | Moves cursor to right | Move to next features |
| ← | Moves cursor to left | Return to previous feature |
| Space | Move cursor to right | Move to next feature |
| RETURN | Return cursor to left | Return to first feature |

# SPECIAL GRAPHICS AND WIDE POINT GRAPHICS CHARACTER SETS

| Hex Code | USASCII | Wide Point Graphics | Line Graphics and VT52 Character Set |
|---|---|---|---|
| 5F | _ (underscore) | (Blank) | (Blank) |
| 60 | ` (Grave) | Horizontal line scan 9 and 10 | ◇ Diamond |
| 61 | a | Horizontal line scan 7 and 8 | ▒ Checkerboard |
| 62 | b | Horizontal line scan 7, 8, 9 and 10 | HT Horizontal Tab |
| 63 | c | Horizontal line scan 5 and 6 | FF Form feed |
| 64 | d | Horizontal line scan 5, 6, 9 and 10 | CR Carriage return |
| 65 | e | Horizontal line scan 5, 6, 7 and 8 | LF Line feed |
| 66 | f | Horizontal line scan 5, 6, 7, 8, 9 and 10 | ° Degree |
| 67 | g | Horizontal line scan 3 and 4 | ± Plus/minus |
| 68 | h | Horizontal line scan 3, 4, 9 and 10 | NL New line |
| 69 | i | Horizontal line scan 3, 4, 7 and 8 | VT Vertical tab |
| 6A | j | Horizontal line scan 3, 4, 7, 8, 9 and 10 | ┘ Lower right corner |
| 6B | k | Horizontal line scan 3, 4, 5 and 6 | ┐ Upper right corner |
| 6C | l | Horizontal line scan 3, 4, 5, 6, 9 and 10 | ┌ Upper left corner |
| 6D | m | Horizontal line scan 3, 4, 5, 6, 7, and 8 | └ Lower left corner |
| 6E | n | Horizontal line scan 3, 4, 5, 6, 7, 8, 9 and 10 | ┼ Crossing lines |

# ANSI CONTROL SEQUENCES SUMMARY

| FUNCTION GROUP | DESCRIPTION | CONTROL SEQUENCE |
|---|---|---|
| Special Graphics and Character Set Selection | Double-High Line | ESC # 3 (top half) |
| | Double-Wide Line | ESC # 4 (bottom) |
| | Select Character Set | ESC ( Fs<br>Designate G0 Character Set |
| | | ESC ) Fs<br>Designate G1 Character Set |
| | Single-Wide, Single-High Line | ESC # 5 |
| Cursor Functions | Cursor Backward | ESC [ Pn D |
| | Cursor Down | ESC [ Pn B |
| | Cursor Forward | ESC [ Pn C |
| | Cursor Position | ESC [ Pn; Pn H |
| | Cursor Position Report | ESC [ Pn; Pn R |
| | Cursor Up | ESC [ Pn A |
| | Horizontal and Vertical Position (Set Cursor) | ESC [ Pn; Pn f |
| | Index (Cursor Down With Scroll) | ESC D |
| | New Line With Scroll | ESC E |
| | Restore Cursor and Attributes | ESC 8 |
| | Reverse Index (Cursor Up With Scroll) | ESC M |
| | Save Cursor and Attributes | ESC 7 |

# VT-52 MODE ESCAPE SEQUENCE SUMMARY

| VT-52 MODE FUNCTIONS | ESCAPE SEQUENCE |
|---|---|
| Cursor Up | ESC A |
| Cursor Down | ESC B |
| Cursor Left | ESC D |
| Cursor Right | ESC C |
| Cursor To Home | ESC H |
| Cursor Up With Scroll | ESC I |
| Direct Cursor Address | ESC Y Pn Pn |
| Enter Alternate Keypad Mode | ESC = |
| Enter ANSI Mode | ESC < |
| Enter Graphics Mode | ESC F |
| Erase To End Of Line | ESC K |
| Erase To End Of Screen | ESC J |
| Exit Alternate Keypad Mode | ESC > |
| Exit Graphics Mode | ESC G |
| Identify | ESC Z |
| Inverse Video | ESC 3 |
| Normal Video | ESC 4 |
| Print Cursor Line Function | ESC V |
| Print Screen Function | ESC [ |
| Select Auto Print (Line-at-a-Time) Mode | ESC ^ |
| Select Printer Controller Mode | ESC W |
| Terminate Auto Print (Line-at-a-Time) Mode | ESC _ |
| Terminate Printer Controller Mode | ESC X |

MOTOROLA

# SERVICE MANUAL

# MDS3000, 3003 SERIES (12-INCH)
# MDS4000, 4003 SERIES (15-INCH)
# CRT DISPLAY MONITORS

StepScan™ MOTOROLA

## GENERAL INFORMATION

The monitors described herein are fully transistorized (except CRT) and applicable for displaying alphanumeric characters. The MDS3000, MDS3003 series monitors use a 12-inch CRT and the MDS4000, MDS4003 series monitors use a 15-inch CRT. Each monitor accepts a TTL non-composite video, with separate TTL horizontal and vertical sync pulses. Additional inputs include optional TTL StepScan, and/or optional +24VDC to operate the monitor.

A universal power transformer permits operating the monitor from 120, 220 or 240 volts AC, 50/60 Hz. A built-in regulated power supply provides operating voltages of +24V, +13V and +5V.

Input and output connections for the monitor are made through a standard 10-pin edge connector, (or optional 20-pin connector) on the circuit card. Inputs consist of non-composite video, horizontal sync, vertical sync, and signal ground. The optional TTL level StepScan and +24VDC are also connected to the monitor via the 10-pin edge connector. Three pins on the edge connector are also provided for alternate interconnecting of the remote brightness control.

Circuitry consists of two stages for non-composite video amplification, one integrated circuit for vertical sync and deflection processing, five stages for horizontal sync and deflection processing, and a three stage regulated power supply. All models also contain dynamic focusing and spot kill circuitry.

One etched circuit card is utilized, which contains all necessary circuitry. Components are mounted on the top of the circuit card and plated copper foil on the bottom. Schematic reference numbers are printed on the top and bottom of each circuit card to aid in the location and identification of components for servicing. All standard operating/adjustment controls are mounted in a convenient manner on the circuit card.

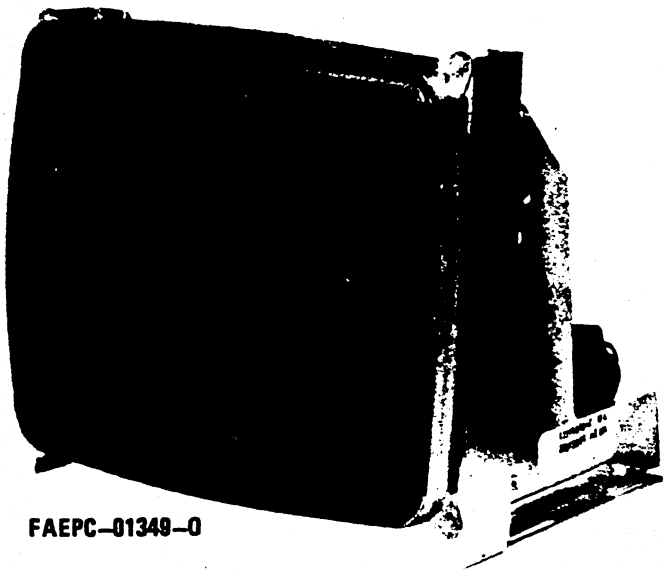

FAEPC-01349-O

*Model MDS4000, MDS4003 Series (15" CRT)*

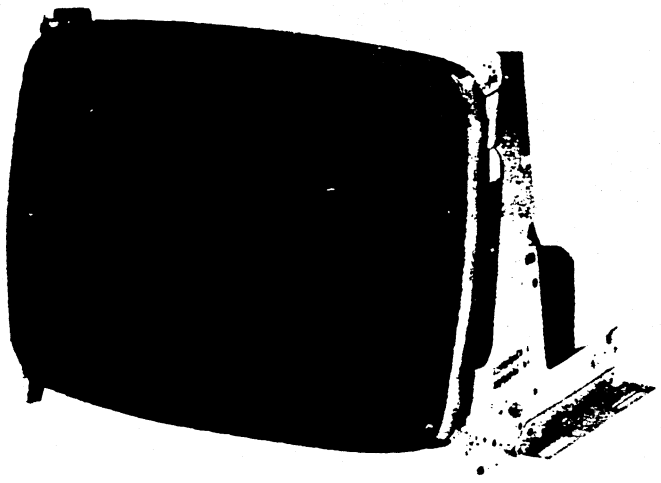

*Model MDS3000, MDS3003 Series (12" CRT)*

MOTOROLA INC.
*Display Systems*

1299 E. Algonquin Road, Schaumburg, IL. 60196 (312) 397-8000

MANUAL VP38
1/81

PART NO. 68P25253A82
©MOTOROLA, INC. 1981

# SAFETY WARNING

**CAUTION: NO WORK SHOULD BE ATTEMPTED ON AN EXPOSED MONITOR CHASSIS BY ANYONE NOT FAMILIAR WITH SERVICING PROCEDURES AND PRECAUTIONS.**

1. SAFETY PROCEDURES should be developed by habit so that when the technician is rushed with repair work, he automatically takes precautions.

2. A GOOD PRACTICE, when working on any unit, is to first ground the chassis and to use only one hand when testing circuitry. This will avoid the possibility of carelessly putting one hand on chassis or ground and the other on an electrical connection which could cause a severe electrical shock.

3. Extreme care should be used in HANDLING THE PICTURE TUBE as rough handling may cause it to implode due to atmospheric pressure (14.7 lbs. per sq. in.). Do not nick or scratch glass or subject it to any undue pressure in removal or installation. When handling, safety goggles and heavy gloves should be worn for protection. Discharge picture tube by shorting the anode connection to chassis ground (not cabinet or other mounting parts). When discharging, go from ground to anode or use a well insulated piece of wire. When servicing or repairing the monitor, if the cathode ray tube is replaced by a type of tube other than that specified under the Motorola Part Number as original equipment in this Service Manual, then avoid prolonged exposure at close range to unshielded areas of the cathode ray tube. Possible danger of personal injury from unnecessary exposure to X-ray radiation may result.

4. An ISOLATION TRANSFORMER should always be used during the servicing of a unit whose chassis is connected to one side of the power line. Use a transformer of adequate power rating as this protects the serviceman from accidents resulting in personal injury from electrical shocks. It will also protect the chassis and its components from being damaged by accidental shorts of the circuitry that may be inadvertently introduced during the service operation.

5. Always REPLACE PROTECTIVE DEVICES, such as fishpaper, isolation resistors and capacitors and shields after working on the unit.

6. If the HIGH VOLTAGE is adjustable, it should always be ADJUSTED to the level recommended by the manufacturer. If the voltage is increased above the normal setting, exposure to unnecessary X-ray radiation could result. High voltage can accurately be measured with a high voltage meter connected from the anode lead to chassis.

7. BEFORE RETURNING A SERVICED UNIT, the service technician must thoroughly test the unit to be certain that it is completely safe to operate without danger of electrical shock. DO NOT USE A LINE ISOLATION TRANSFORMER WHEN MAKING THIS TEST.

In addition to practicing the basic and fundamental electrical safety rules, the following test, which is related to the minimum safety requirements of the Underwriters Laboratories should be performed by the service technician before any unit which has been serviced is returned.

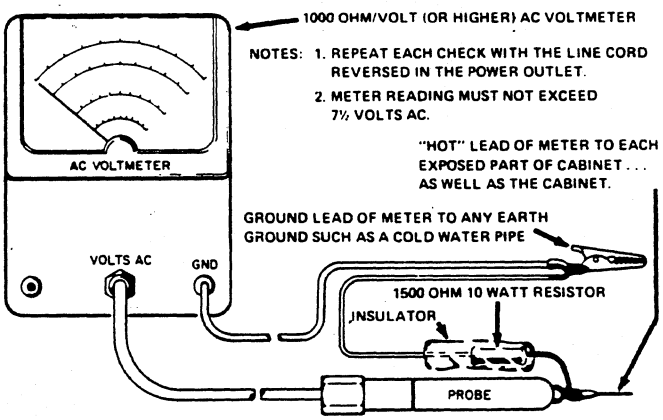


Voltmeter Hook-up for Safety Check

A 1000 ohm per volt AC voltmeter is prepared by shunting it with a 1500 ohm, 10 watt resistor. The safety test is made by contacting one meter probe to any portion of the unit exposed to the operator such as the cabinet trim, hardware, controls, knobs, etc., while the other probe is held in contact with a good "earth" ground such as a cold water pipe.

The AC voltage indicated by the meter may not exceed 7½ volts. A reading exceeding 7½ volts indicates that a potentially dangerous leakage path exists between the exposed portion of the unit and "earth" ground. Such a unit represents a potentially serious shock hazard to the operator.

The above test should be repeated with the power plug reversed, when applicable.

NEVER RETURN A MONITOR which does not pass the safety test until the fault has been located and corrected.

# Table of Contents


GENERAL INFORMATION ..... 1
SAFETY WARNING ..... 2
SPECIFICATIONS ..... 4

SERVICE NOTES
- BLOCK/SCHEMATIC DIAGRAMS* ..... 5
- ELECTRICAL/MECHANICAL PARTS LISTS* ..... 5
- CIRCUIT TRACING ..... 5
- COMPONENT REMOVAL ..... 5
- POWER TRANSISTOR REPLACEMENT ..... 5
- INSTALLATION-MOUNTING SLOT HOLE DIMENSIONS ..... 6
- CRT REPLACEMENT ..... 6
- SERVICE PHOTOGRAPHS ..... 6

OPERATIONAL CHECK/ADJUSTMENT PROCEDURES
- GENERAL ..... 9
- EQUIPMENT REQUIRED ..... 9
- ISOLATED GROUND/COMMON RETURN CHECK ..... 9
- +24V VOLTAGE REGULATOR CONTROL ADJUSTMENT ..... 9
- BRIGHTNESS/CONTRAST ADJUSTMENT ..... 10
- HORIZONTAL OSCILLATOR ADJUSTMENT ..... 10
- HORIZONTAL SIZE ADJUSTMENT ..... 10
- VERTICAL HOLD ADJUSTMENT ..... 10
- VERTICAL SIZE/LINEARITY ADJUSTMENT ..... 10
- STEPSCAN ADJUSTMENT ..... 11
- RASTER CENTERING ADJUSTMENT ..... 11
- RASTER GEOMETRY ADJUSTMENTS ..... 12
- FOCUS ADJUSTMENT ..... 13

THEORY OF OPERATION
- POWER SUPPLY CIRCUIT ..... 15
- VIDEO AMPLIFIER CIRCUIT ..... 15
- SPOT KILL CIRCUIT ..... 16
- STEPSCAN FUNCTION ..... 16
- STEPSCAN CIRCUIT ..... 17
- VERTICAL SCAN CIRCUITRY ..... 17
- HORIZONTAL DRIVE/SYNC DELAY AND REGENERATOR CIRCUITS ..... 18
- PHASE DETECTOR CIRCUIT ..... 18
- HORIZONTAL OSCILLATOR/DRIVER CIRCUITS ..... 19
- HORIZONTAL OUTPUT CIRCUITRY ..... 19
- DYNAMIC FOCUS CIRCUIT ..... 20

SERVICE DIAGRAMS
- BLOCK DIAGRAM ..... 21
- CIRCUIT CARD LAYOUT - COMPONENT SIDE ..... 22
- CIRCUIT CARD LAYOUT - SOLDER SIDE ..... 23


*** NOTE:** A service schematic diagram and electrical/mechanical parts list for the basic MDS-Series CRT monitors is not included in this manual; instead, it accompanies this manual as a separate sheet, Motorola Part No. 68P25253A84.

For users of unique variations of the MDS-Series CRT monitors, however, order the schematic diagram by its complete model number.

# SPECIFICATIONS

## DISPLAY

- **MDS3000** – 12" diagonal measure
- **MDS4000** – 15" measured diagonally, 14" diagonal viewable area
- 110° deflection angle
- 3 x 4 aspect ratio
- P4 phosphor standard (other EIA phosphors available)
- T band U.L. implosion protection
- Direct etch and PPG optional
- **Standard Display Size:** (MDS3000) 8.5 x 6.0, (MDS4000) 10.0 x 7.5
- Capable of displaying over 3400 characters.

## VIDEO PERFORMANCE

- **Resolution:** 1200 lines center, 950 lines corners (P4 phosphor)
- **Bandwidth:** within 3 dB, 10 Hz to 30 MHz is typical.

## PERFORMANCE FEATURES

- **StepScan™:** Stepped vertical scanning option provides an increased capacity display at any horizontal frequency, thus conserving bandwidth and in many cases, eliminating the need for a higher frequency clock for increased performance.
- **Dynamic Focus:** Excellent corner focus is achieved by supplying dynamic voltage to the focus element of the cathode ray tube.

## SYNCHRONIZATION

- **Horizontal:** 15.7 kHz ± 500 Standard; 18.7 kHz ± 500 optional
- **Vertical:** 47 to 63 Hz
- **Horizontal Blanking:** 11 uSec minimum (for scanning frequency of 15.7 kHz). 10 uSec minimum (at 18.7 kHz). Time includes retrace and delay.
- **Vertical Blanking:** 800 uSec (includes retrace and video delay)

## INPUT SIGNALS

- **Horizontal:** 4 to 32 uSec, input TTL compatible, positive-going (negative optional), 4.0V PP ± 1.5
- **Vertical:** 50 to 1400 uSec, input TTL compatible, positive (negative optional), 4.0V PP ± 1.5
- **Video:** positive white, input termination 470 ohms ± 5%, 2.5 - 5.0V PP

  Composite video input with DHHS protection circuit optionally available.

## POWER INPUT

- 120/240V AC (105–135), 50/60 Hz, 65VA max.
- 24V DC optional

## INTERCONNECT TO CUSTOMER SYSTEM

- 10 pin edge connector standard
- 20 pin ribbon cable optional

## CONTROLS

- **Internal:** Horizontal size, horizontal video centering, brightness, focus, vertical hold, vertical size, vertical linearity. (All controls adjustable from top or back of unit).
- **External:** Brightness (as an operator control.
- Optional contrast control available.

## GEOMETRY (Pin & Barrel)

- Sides equal less than 1% of height.
- Top and bottom equal less than 1% of width.

## LINEARITY

- Character height or width will not vary ±7% from the average character size.
- Adjacent characters will not vary more than 5%.

## ENVIRONMENT

- **Operating Temperature:** 0° to +55°C
- **Storage Temperature:** –40°C to +65°C

  **Note:** CRT's with bonded etched panels should not be subjected to storage or operating temperatures above 50°C
- **Operating Altitude:** 10,000 ft. max.

  Designed to comply with DHHS Radiation Performance Standards and U.L. specifications.

*In a continual effort to upgrade our standard products as new technological advances are made, specifications are subject to change without notice.

**– NOTE –**

This manual is up-to-date and correct as of the printing date.

**– CAUTION –**

NO WORK SHOULD BE ATTEMPTED ON ANY EXPOSED MONITOR CHASSIS BY ANYONE NOT FAMILIAR WITH SERVICING PROCEDURES AND PRECAUTIONS.

## SERVICE NOTES

### BLOCK/SCHEMATIC DIAGRAMS

Refer to Figure 1 for a functional view of an MDS-Series Display Monitor in block form. It will help in becoming familiar with the overall schematic diagram, which accompanies this manual as a separate service sheet (Motorola Part No. 68P25253A84).

### ELECTRICAL/MECHANICAL PARTS LISTS

A complete listing of field replaceable parts in alphanumeric sequence is included on the back of the accompanying schematic diagram.

### CIRCUIT TRACING

Component reference numbers are printed on the top and bottom of the circuit card to facilitate circuit tracing. In addition, top (component) and bottom (solder) view drawings are included for convenient viewing of the circuit card. Transistor elements are identified as follows:

E – emitter, B – base, and C – collector

### COMPONENT REMOVAL

On the circuit card, component removal requires the use of a "desoldering" iron, carefully applied to prevent lifting of the foil from the circuit card. An iron with a temperature controlled heating element is recommended to reduce the possibility of card damage. Use latest recommended desoldering procedures. The nozzle of the solder extracting gun should be inserted directly over the component lead which is heated only long enough to melt the solder and draw it away. This should leave the component lead free of the circuit card.

### POWER TRANSISTOR REPLACEMENT

When replacing transistors Q101 (+24V Reg.) or Q402 (Horiz. Output), use the following information and observe all precautions:

1. There are no plug-in sockets; instead, two (2) screws are soldered from the bottom of the circuit card to protrude up through the circuit card and its bracket. The transistors are secured with two (2) nuts each on the top of the circuit card bracket, which also serves as a heat sink.

2. When replacing a transistor, silicone grease (Motorola Part No. 11M490487) should be applied evenly to the top of the heat sink (circuit card bracket) and bottom of the transistor. In addition, be sure a mica insulator is positioned properly between the transistor and heat sink.

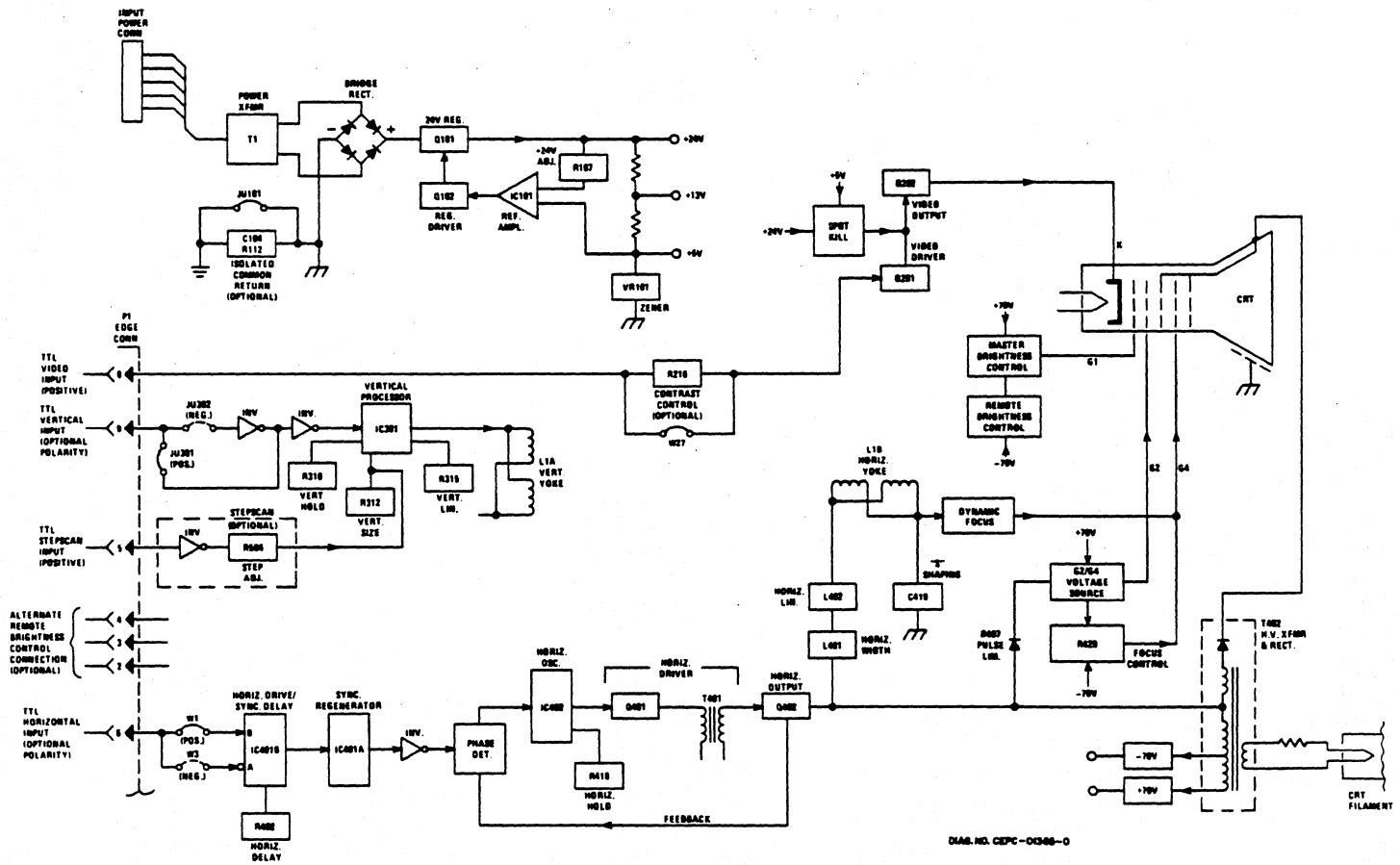


*Figure 1. MDS-Series Display Monitor – Functional Block Diagram*

3. The transistor mounting nuts must be tight before applying power to the monitor. This insures proper cooling and electrical connections. NON-COMPLIANCE WITH THESE INSTRUCTIONS CAN RESULT IN FAILURE OF THE TRANSISTOR AND/OR ITS RELATED COMPONENTS.

**– NOTE –**

Use caution when tightening transistor mounting nuts. If the screw or nut threads are stripped by excessive pressure, a poor electrical and mechanical connection will result.

## INSTALLATION–MOUNTING SLOT HOLE DIMENSIONS

Figure 2 is a bottom view drawing that clearly illustrates mounting slot hole dimensions. Use it to identify mounting clearances in the final installation.

## CRT REPLACEMENT

### General

Use extreme care in handling the CRT as rough handling may cause it to implode due to high vacuum pressure.

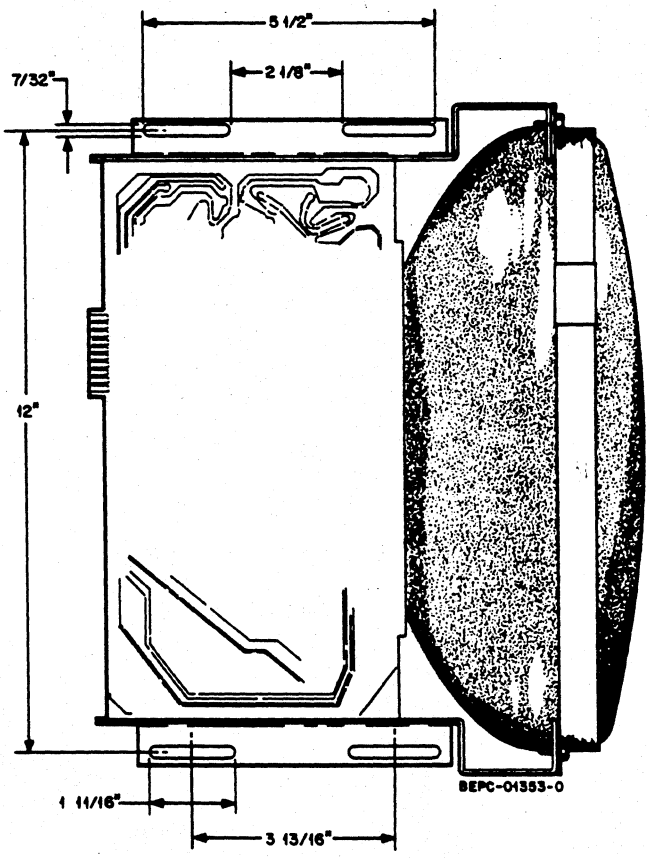


*Figure 2. Mounting Slot Hole Dimensions*

Do not nick or scratch glass or subject it to any undue pressure in removal or installation. Use goggles and heavy gloves for protection. Also, be sure to disconnect the monitor from all external voltage sources. Refer to Figure 5 for location of the CRT identification label. Information on the label is essential for ordering the correct replacement CRT!

### Procedure

Step 1. Connect a grounding strap (first) to the metal chassis for a good earth ground; then discharge CRT by shorting the H.V. 2nd anode to ground.

Step 2. Remove the CRT socket, deflection yoke (loosen clamp screw) and 2nd anode lead.

Step 3. Remove CRT from the front of the chassis by loosening and removing four screws, one at each corner of CRT.

Step 4. Reverse the above steps to re-install the new CRT.

Step 5. After installation perform operational check/adjustment procedures.

## SERVICE PHOTOGRAPHS

**Figure 3:**

Figure 3 shows the rear view of a typical MDS-Series display monitor. Callouts identify the circuit card edge connector (P1) for signal inputs, a six (6) pin power input connector, and a remote brightness control (R213) soldered to the circuit card. Variations to the aforementioned will include a different type of power connector, and the remote brightness control can be interconnected via the circuit card edge connector.

**Figure 4:**

For convenient access to the component (top) side of the circuit card, reference Figure 4. Callouts accompanying the illustration are self-explanatory.

**Figure 5:**

For convenient unobstructed troubleshooting of the circuit card, stand the monitor on its side as shown in Figure 5. Notice also in this illustration the location of the CRT identification label. The information on this label is essential for ordering the correct replacement CRT.

**Figure 6:**

Reference Figure 6 for quick identification and location of adjustable controls, transistors, integrated circuits, etc.

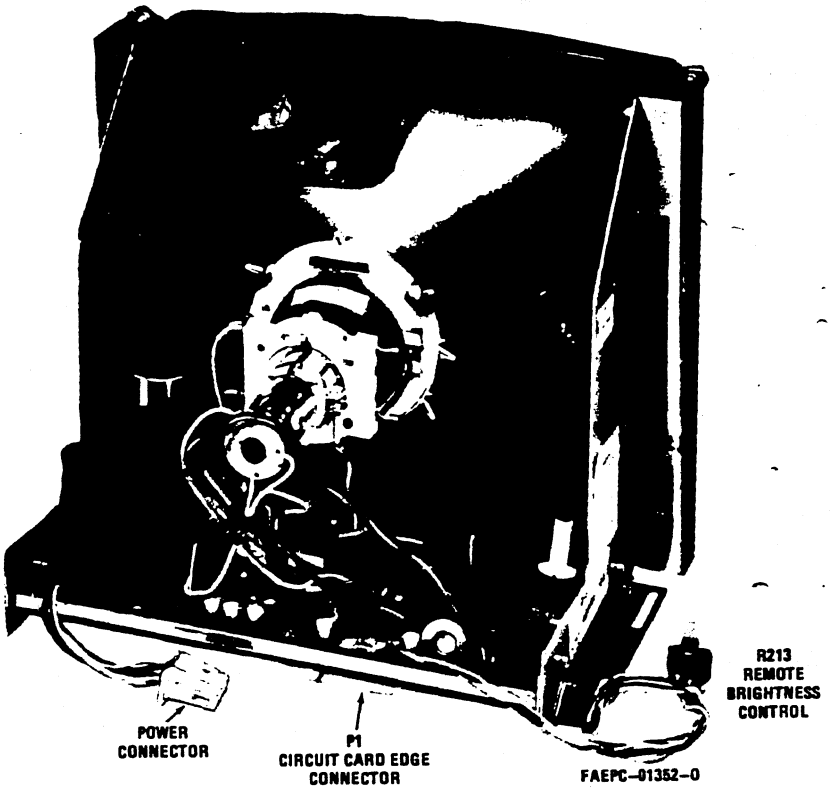


*Figure 3. Typical MDS-Series Display Monitor — Rear View*

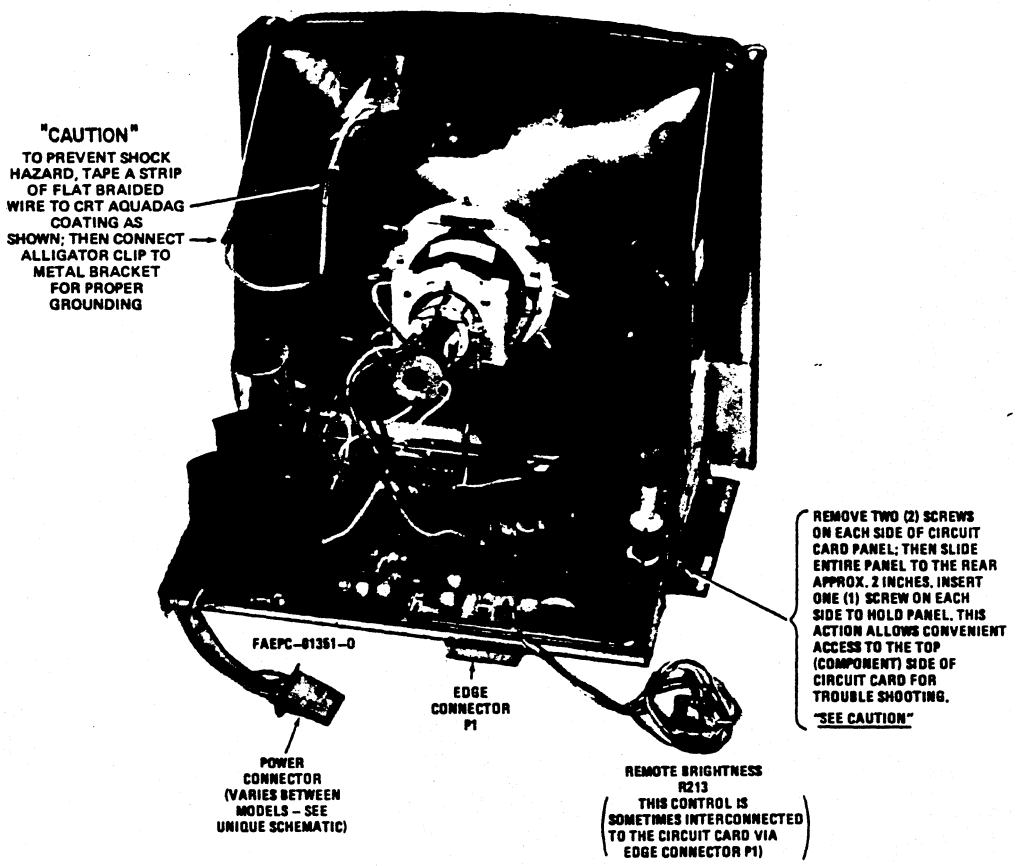


*Figure 4. Circuit Card Troubleshooting from Component Side*

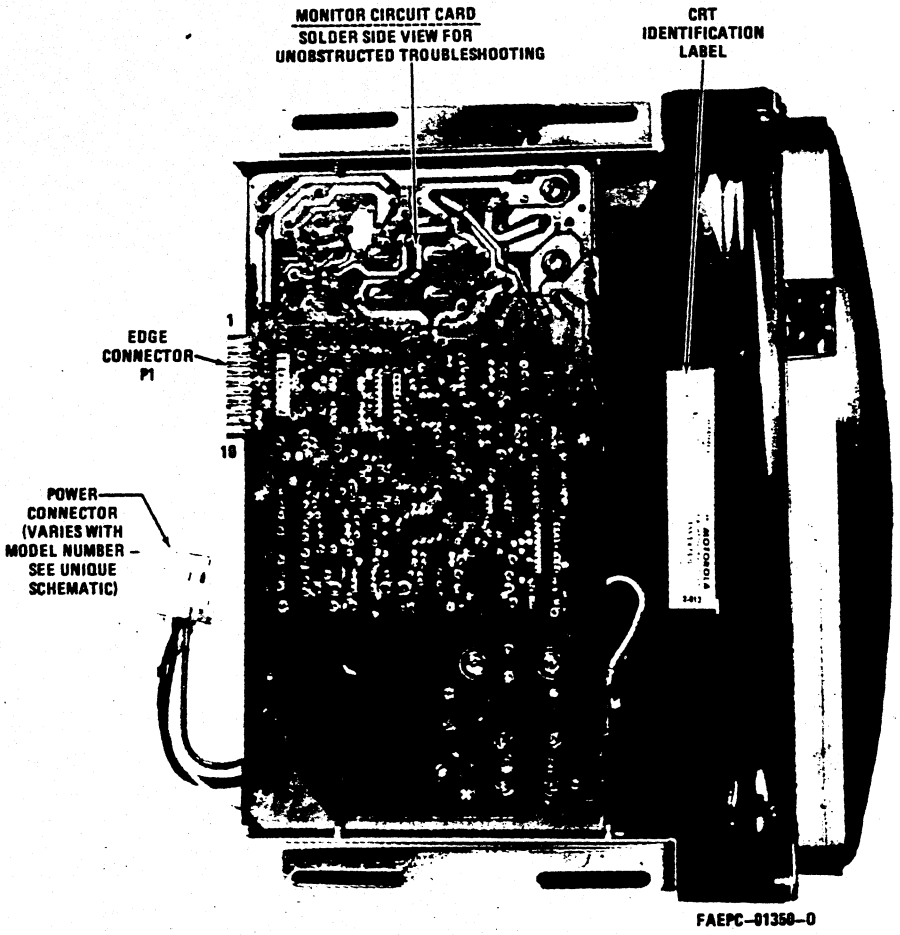


*Figure 5. Circuit Card Troubleshooting from Component Side*

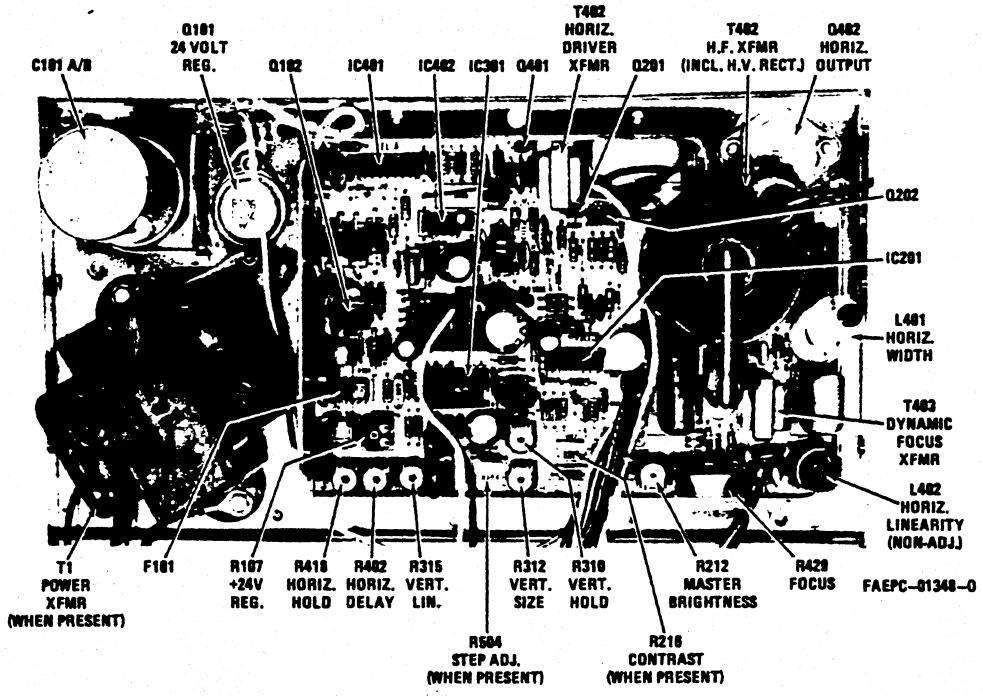


*Figure 6. Identification and Location of Circuit Card Components – Adjustable Controls, Transistors, Integrated Circuits, Etc.*

## OPERATIONAL CHECK/ADJUSTMENT PROCEDURES

### GENERAL

The following procedures are provided to check the operation of the monitor and perform simple preinstallation adjustments (if required), or readjust after servicing and component replacement.

When reference is made to adjust to a specific size display (vertically and horizontally), refer to original model specifications for correct dimensions by the monitor model number. This also applies to minimum and maximum tolerances when adjusting for correct CRT geometry, linearity, focus, etc.

**– NOTE –**

To assist in understanding more of the preceding terminology, refer to a separate Motorola Manual, "Incoming Inspection Guide" (Motorola part number 68P25253A71).

Perform the procedures in the sequence presented, and allow at least five (5) minutes warm-up before adjusting the monitor. In addition, when instructed to disconnect an input signal, do not ground the signal at the circuit card edge connector (P1). This action could damage the signal source generator. Instead, disconnect the signal at its source.

CCW = Counter Clockwise Rotation, CW = Clockwise Rotation. (As viewed from rear of circuit card.)

### EQUIPMENT REQUIRED

Variac (0-150 Volts AC)

Precision Digital Voltmeter

Non-Metallic Alignment Tool

Test Signals (Bench test signals must be same amplitude, polarity, and frequency as final installed operating signal source. Refer to original specifications for values by monitor model number.)

The following Motorola gauges are required for performing complete and accurate CRT geometry and linearity alignment. Refer to original model specifications for correct gauges to use.

Linearity Gauge

Slot Gauge

Parallelogram Gauge

### ISOLATED GROUND/COMMON RETURN CHECK

**– CAUTION –**

Do not connect power or signals to monitor.

**Procedure No. 1.** For monitors with circuit card common return foil isolated from metallic chassis/earth ground. Isolating components are R112 (22K resistor) and C104 (0.1 $\mu$F capacitor); jumper JU101 is out.

Step 1. Connect ohmmeter leads between edge connector P1, pin 1, and chassis (earth) ground. Resistance reading should be 22K ohms, $\pm$ 5%.

Step 2. Connect ohmmeter leads between edge connector P1, pin 10, and chassis (earth ground. Resistance reading should be 22k ohms, $\pm$ 5%.

**– NOTE –**

Step 3 is only for monitors that have their Remote Brightness control (R213) interconnected to the circuit card via edge connector P1, pins 2, 3 and 4.

Step 3. Connect ohmmeter leads between edge connector P1, pin 2, and chassis (earth) ground. Resistance reading should be 22K ohms, $\pm$ 5%.

**Procedure No. 2.** For monitors with non-isolated circuit card common return foil; whereby, the foil is connected direct to the metallic chassis/earth ground via a (white) wire. (Jumper JU101 is in, while components R112 and C104 are out.)

Step 1. Measure between edge connector pins and chassis (earth) ground as described in Procedure No. 1. Resistance readings should be 0.2 ohms or less.

### +24V VOLTAGE REGULATOR CONTROL ADJUSTMENT

**Procedure**

Step 1. Connect monitor to AC line supply. Adjust supply to 120 volts.

Step 2. Apply signal connector to circuit card edge connector, P1.

Step 3. Adjust Vertical (R310) and Horizontal (R418) Hold controls until display is synced.

Step 4. Connect a DC digital voltmeter or other precision accuracy voltmeter to the collector (case) of the regulator output transistor, Q101.

Step 5. Adjust the +24V Voltage Regulator control, R107, for output of +24 volts $\pm$ 0.5 volts.

Step 6. When adjustment is complete, vary the AC line supply voltage between 105 and 135 volts to check for proper regulator operation. If regulator is operating properly there should be no change in display size.

## BRIGHTNESS/CONTRAST ADJUSTMENT

**Procedure**

Step 1A. Disconnect video signal input (only) at pin 8 of edge connector P1 . . .

or

Step 1B. If monitor is equipped with a Contrast control (R216 on monitor circuit card or customer supplied off-circuit card), rotate to the position that cuts off the video input signal.

Step 2. Rotate Master Brightness control (R212) fully CCW (raster off).

Step 3. Rotate Remote Brightness control (R213) fully CCW (raster off).

Step 4. Rotate Master Brightness control (R212) until the raster just begins to appear on the CRT; then back off slightly to the threshold of raster cutoff.

Step 5A. Reconnect video signal . . .

or

Step 5B. Adjust Contrast control (if present) for desired video display level on CRT.

Step 6. Adjust Remote Brightness control (R213) for desired (overall) brightness level.

## HORIZONTAL OSCILLATOR ADJUSTMENT

**Procedure**

Step 1. Disconnect horizontal sync input (only) at pin 6 of edge connector P1.

Step 2. Adjust Horizontal Hold control (R418) until video display approaches best horizontal sync condition. (Without the horizontal sync input connected, however, the display will never quite lock in.)

**– NOTE –**

It may be necessary to temporarily increase the raster brightness with the Remote Brightness control (R213) to view the raster edges.

Step 3. Reconnect the horizontal sync signal. (At this point the video display should be in sync.)

Step 4. Adjust the Horizontal Delay control (R402) until the video display is centered horizontally within the raster (as viewed from the left side to the right side of the raster).

## HORIZONTAL SIZE ADJUSTMENT

**Procedure**

Adjust Horizontal Width coil (L401) for specified video width (horizontally).

**– NOTE –**

To increase width, rotate coil slug CCW (away from circuit card); to decrease width, rotate coil slug CW (toward circuit card).

## VERTICAL HOLD ADJUSTMENT

**Procedure**

If video display is rolling, adjust the Vertical Hold control (R310) until the video display remains locked in.

## VERTICAL SIZE/LINEARITY ADJUSTMENT

**Procedure No. 1 (Monitors without StepScan)**

Step 1. Adjust the Vertical Size control (R312) until the specified size display (vertically) is obtained.

Step 2. (Refer to Figure 7.) Adjust the Vertical Linearity control (R315) until the extreme top and bottom characters (designated "A" and "B") are equal in height to the center characters (designated "C").

Step 3. Readjust the Vertical Size control (R312), if necessary, for specified size display (vertically).

**Procedure No. 2 (Monitors with StepScan)**

Step 1. With specified StepScan input connected to pin 5 of edge connector P1, rotate the Step Adjust control (R504) for minimum vertical size. (This control will be final adjusted later.)

Step 2. Adjust Vertical Size control (R312) for specified vertical size display – before StepScan is actively applied with Step Adjust control, R504.

Step 3. (Refer to Figure 7.) Adjust the Vertical Linearity control (R315) until the extreme top and bottom characters (designated "A" and "B") are equal in height to the center characters (designated "C").

Step 4. Readjust the Vertical Size control (R312), if necessary, for specified size display (vertically) as described in Step 2.

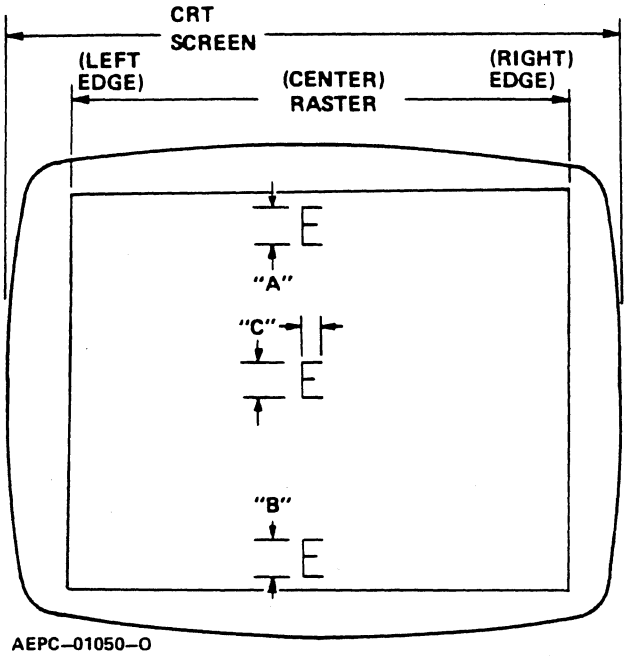


*Figure 7. Partial CRT Display of Characters for Vertical Linearity Adjustment*

**STEPSCAN ADJUSTMENT (Applicable to monitors with StepScan only)**

**General**

StepScan is a unique input signal that is accounted for, and incorporated, when the original video signal format is being developed. As a result, it cannot be connected to just any monitor, even if the monitor has the necessary StepScan circuitry. Check original video signal format specification.

**Procedure:**

Step 1. Be sure specified positive-going TTL Level StepScan signal is connected to pin 5 of edge connector P1.

Step 2. Rotate the Step Adjust control (R504) through its entire range slowly, and observe that the display size increases vertically.

Step 3A. Adjust the Step Adjust control (R504) for correct vertical size per original model specifications . . .

or

Step 3B. If the StepScan is not required in the final installed application, rotate the Step Adjust control (R504) for minimum vertical size. (See following NOTE.)

**– NOTE –**

In Step 3B this is applicable only if the StepScan input remains connected to the edge connector from its source. However, if the StepScan source is physically disconnected from pin 5 of the edge connector, pin 5 must be grounded to pin 1 or 10. In either of these conditions, proceed to Step 4.

Step 4. Readjust Vertical Size control (R312) to desired height vertically.

**RASTER CENTERING ADJUSTMENT (Applicable only if the CRT and/or deflection yoke have been changed.)**

**– NOTE –**

Depending on the input signal format, the video display on some monitors will be down-centered more than normal within the raster. As a result, an up-centering resistor (R325) is added, which shifts the entire raster (and video display) up. (The shift will vary between 0.1 – 0.4 inches.) This action is necessary to minimize over-adjusting the Centering Magnets to recenter the video display. (Excessive adjustment of the Centering Magnets could cause geometric distortion.)

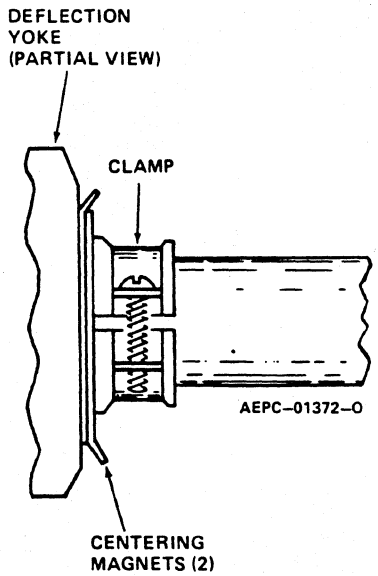


*Figure 8. Partial View of CRT Neck/Deflection Yoke – Centering Magnets*

**General**

This procedure should be performed while the monitor is free-standing on a bench, and in the correct sequence (preceding the Raster Geometry Adjustment procedure). Do not readjust after the monitor has been installed in a cabinet or terminal.

**Procedure No. 1 (For monitors without up-centering resistor R325.)**

Step 1. Turn up the Remote Brightness control (R213) until the four (4) edges of the raster are visible.

Step 2. (Reference Figure 8.) Rotate the two (2) centering magnets (simultaneously) until the raster is centered (horizontally and vertically) within the active phosphor area of the CRT. (Reference Figure 9.)

Step 3. Readjust the Remote Brightness control (R213) for desired (overall) brightness level.

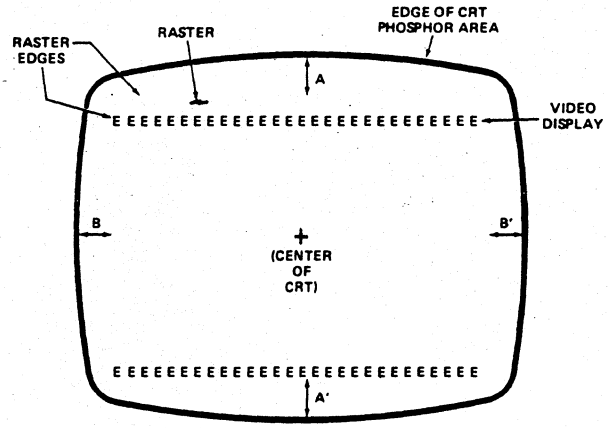


*Figure 9. Raster Centering Without Up-Centering Resistor, R325*

**Procedure No.2 (For monitors with up-centering resistor R325.)**

Step 1. Turn up the Remote Brigntness control (R213) until the four (4) edges of the raster are visible.

Step 2. (Reference Figure 8.) Rotate the two (2) centering magnets (simultaneously) until the left and right edges of the raster are centered horizontally, and the top and bottom edges of the video display are centered vertically within the active phosphor area of the CRT. (Reference Figure 10.)

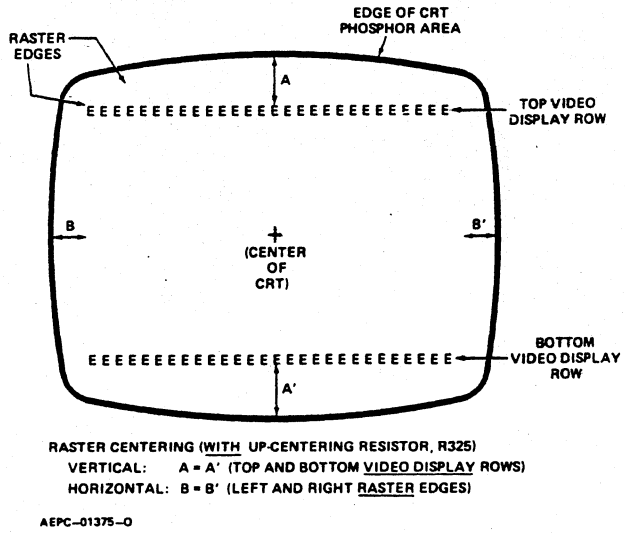


*Figure 10. Raster Centering With Up-Centering Resistor, R325*

Step 3. Readjust the Remote Brightness control (R213) for desired (overall) brightness level.

**– CAUTION –**

Remember, do not readjust the centering magnets after performing the CRT Raster Geometry Adjustment procedure that follows, or after final installation. CRT raster geometry will be affected.

## RASTER GEOMETRY ADJUSTMENTS

**General**

This adjustment is normally required only if the yoke and/or CRT have been replaced. Upon completion of the geometry adjustments, there may not be a yoke magnet installed on every yoke mounting pin. Normal installation ranges from one to four yoke magnets per deflection yoke. In addition, keep in mind that there will be some interaction between yoke magnets on the deflection yoke mounting pins. Whereby, as the geometry adjustment proceeds, it may be necessary to remove an earlier positioned magnet from one pin when a new magnet is positioned (or added) on a different pin.

There are two (2) different strength yoke magnets available for correcting CRT geometry. The soft core (or flexible) magnet is the stronger of the two magnets. (Reference Figure 11 to identify their north poles.) Pincushion and trapezoidal correction generally require high strength magnets, and barrel correction requires a lower strength magnet for correction.

**– WARNING –**

High voltages are present at the deflection yoke and are a potential shock hazard. Exercise caution when performing the following adjustment procedures.

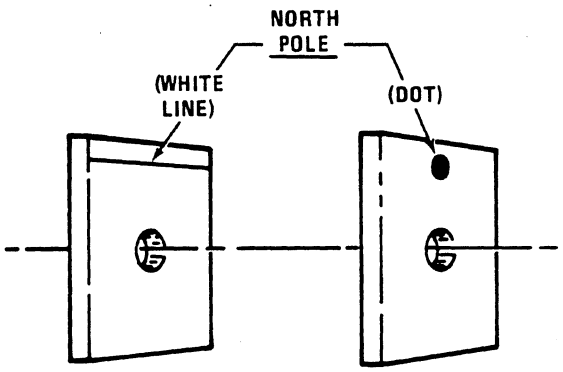


*Figure 11. Yoke Magnet North Pole Identification*

**Pincushion/Barrel Correction (top, bottom and sides) Procedure**

Perform this adjustment if the raster exhibits the abnormal effects shown in Figure 13.

Step 1. Push a magnet on the yoke mounting pin as shown in Figure 13. A magnet should be placed only on the pin that corresponds to the affected area.

Step 2. Rotate the magnet to obtain the desired raster, labeled "NORMAL" on Figure 13.

Step 3. If the desired raster cannot be obtained, add a second magnet to the yoke mounting pin. Both magnets must be aligned as shown in Figure 12; then rotated simultaneously.

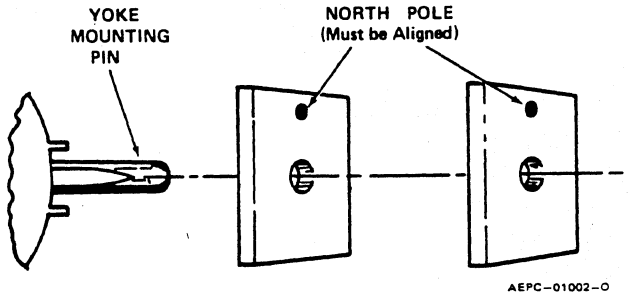


*Figure 12. Installing a Second Yoke Magnet*

**Trapezoidal Correction (corners) Procedure**

Perform this adjustment if the raster exhibits the abnormal effects shown in Figure 14.

Step 1. Push a magnet onto the yoke mounting pin as shown in Figure 14. Magnet should be placed only on the pin that corresponds to the affected area.

Step 2. Rotate the magnet to obtain the desired raster, labeled "NORMAL" in Figure 14.

Step 3. If the desired raster cannot be obtained, add a second magnet to the yoke mounting pin. Both magnets must be aligned as shown in Figure 12; then rotated simultaneously.

## FOCUS ADJUSTMENT

**Procedure**

The optimum focus of the display is obtained by adjusting the focus control, R429, for best focus at a point which is near the center and approximately one-third (1/3) down from the top of the display.

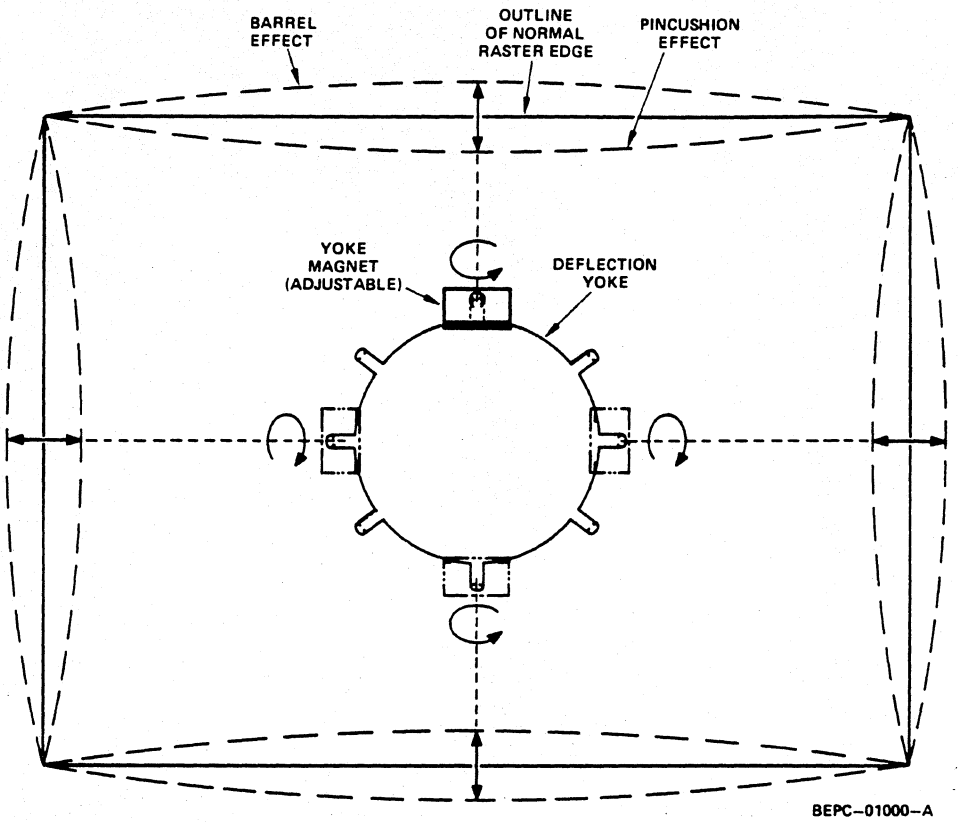


*Figure 13. Pincushion/Barrel Effects and Adjustment*

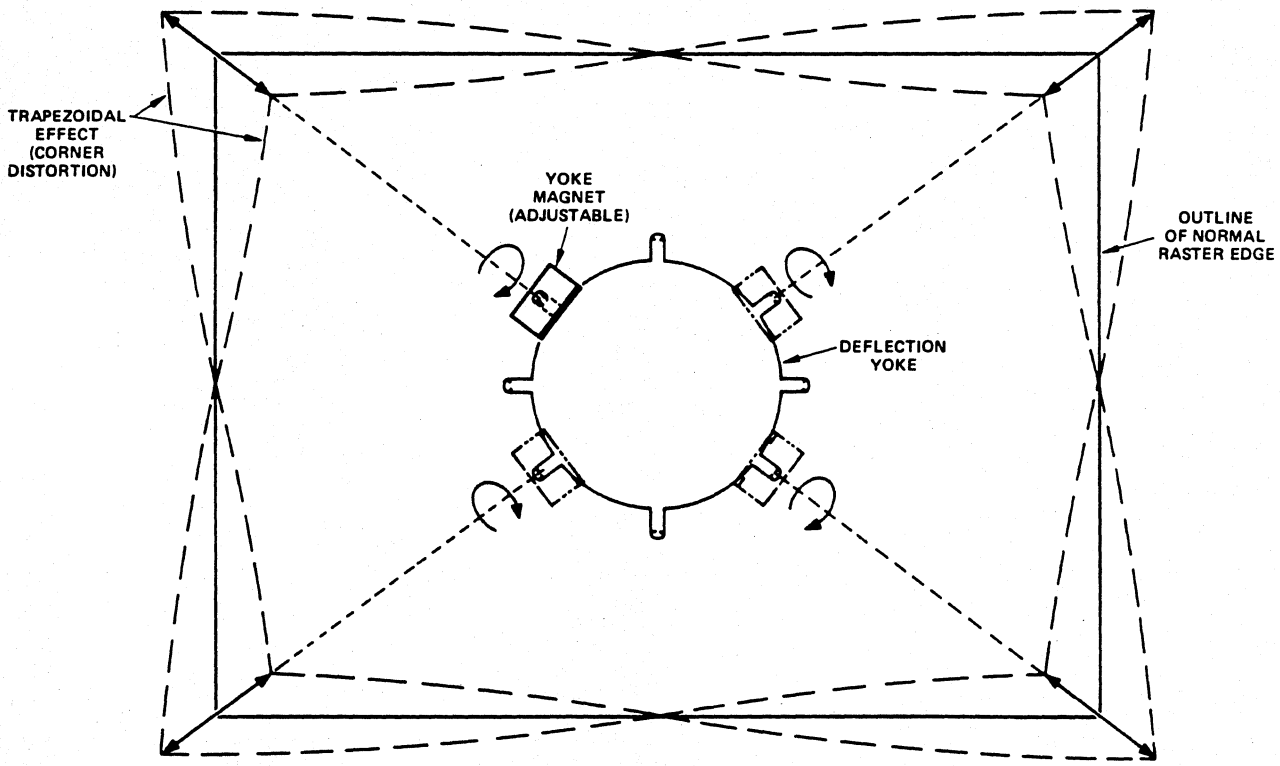


*Figure 14. Trapezoidal Effect and Adjustment*

## THEORY OF OPERATION

### POWER SUPPLY (Refer to Figure 15)

The power supply is a transformer operated, full wave, regulated series pass circuit that maintains a constant output voltage with line input variations of ± 12.5%. Depending on how connector S1 is wired, operation from 120, 220 or 240 volts, 50/60 Hz is possible. Integrated circuit IC101 is the reference amplifier, transistor Q102 is the regulated output driver, and Q101 is the series pass transistor.

The output voltage, +24V, appears at the collector of Q101. This voltage is divided between R106, R107 and R109. Resistor R108 limits the range of R107. The voltage appearing on the arm of potentiometer R107 (24V ADJ. control) is the reference input to the inverting input (–) of reference amplifier IC101.

A temperature compensated zener diode, VR101, establishes a fixed reference voltage at the non-inverting input (+) to IC101. Resistors R110 and R111 and diode D105 provide bias current for VR101. The junction of R110 and R111 is the +13V source for the horizontal oscillator, IC402. Regulator VR101 is also the 5 volt source for the monitor circuitry. Operating voltage for IC101 is derived from resistor network R101 and R105.

An increase in output current will cause a decrease in output voltage due to internal supply impedance. This will cause the voltage at the base of Q102 to become more positive via the inverting amplifier IC101. With the base more positive, Q102 will conduct more, increasing its collector current. This increases the base current in Q101. The result is increased output current from Q101, raising the output voltage and maintaining the proper output voltage level.

Electrolytic capacitor C101, section "A", filters the bridge rectifier (D101–D104) output, while section "B" provides additional filtering of the +24V regulator output. Capacitor C103 filters the +5 volt source. R102 is the load resistor for Q102. Resistors R103, R104 bias Q102. Capacitor C102 increases regulation at high frequencies for improved transient response.

### VIDEO AMPLIFIER (Refer to Figure 16)

The linear video amplifier consists of two stages, Q201 and Q202, which are connected in a cascode configuration. This common emitter-common base arrangement greatly reduces the effect of Miller capacity (when compared to a conventional single transistor video amplifier/output stage).

A TTL compatible non-composite video signal, approximately 4.0 volts P-P, is DC coupled to the base of Q201 via R202. Resistor R201 provides proper termination for the high frequency input video signal. R203 and C201 provide high frequency compensation to maintain a flat response when Q201 and Q202 conduct. Contrast control R216 (when present) is used to limit the input video signal, which indirectly varies the amplitude of the video drive to the CRT cathode. This action is necessary to provide a contrast function when more than one level of video is applied to the input. Capacitor C208 (when present) provides high frequency compensation for the input video signal.

During a no-signal condition, video driver transistor Q201 is off. At the same time, video output transistor Q202 is base

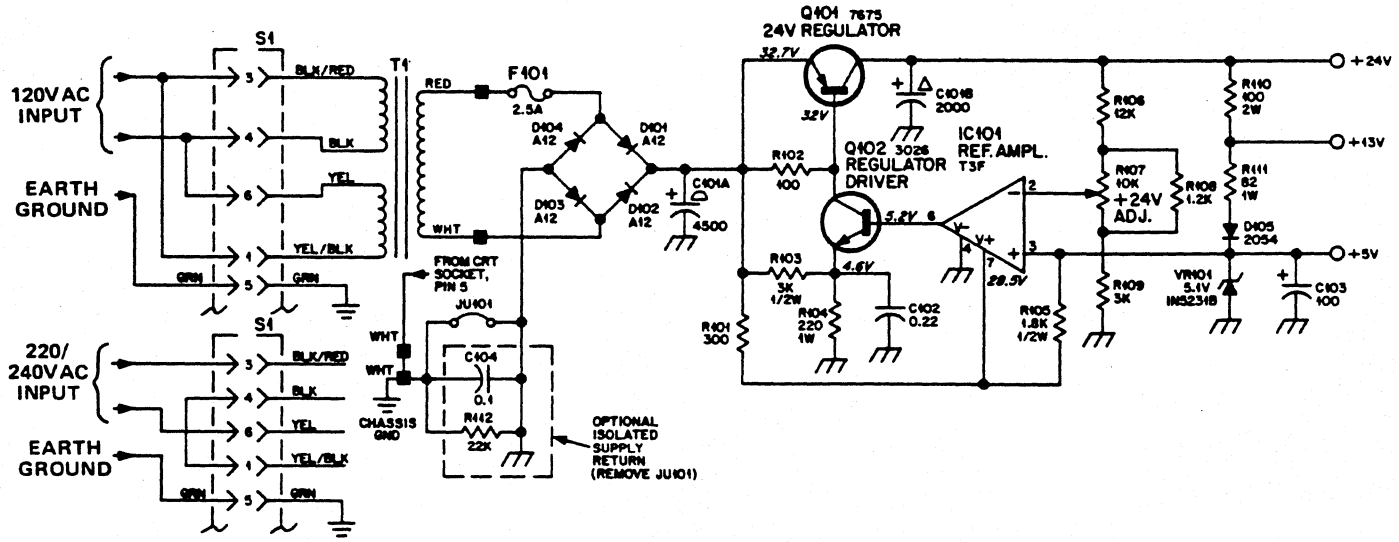


*Figure 15. AC Power Input/Regulated Power Supply Output*

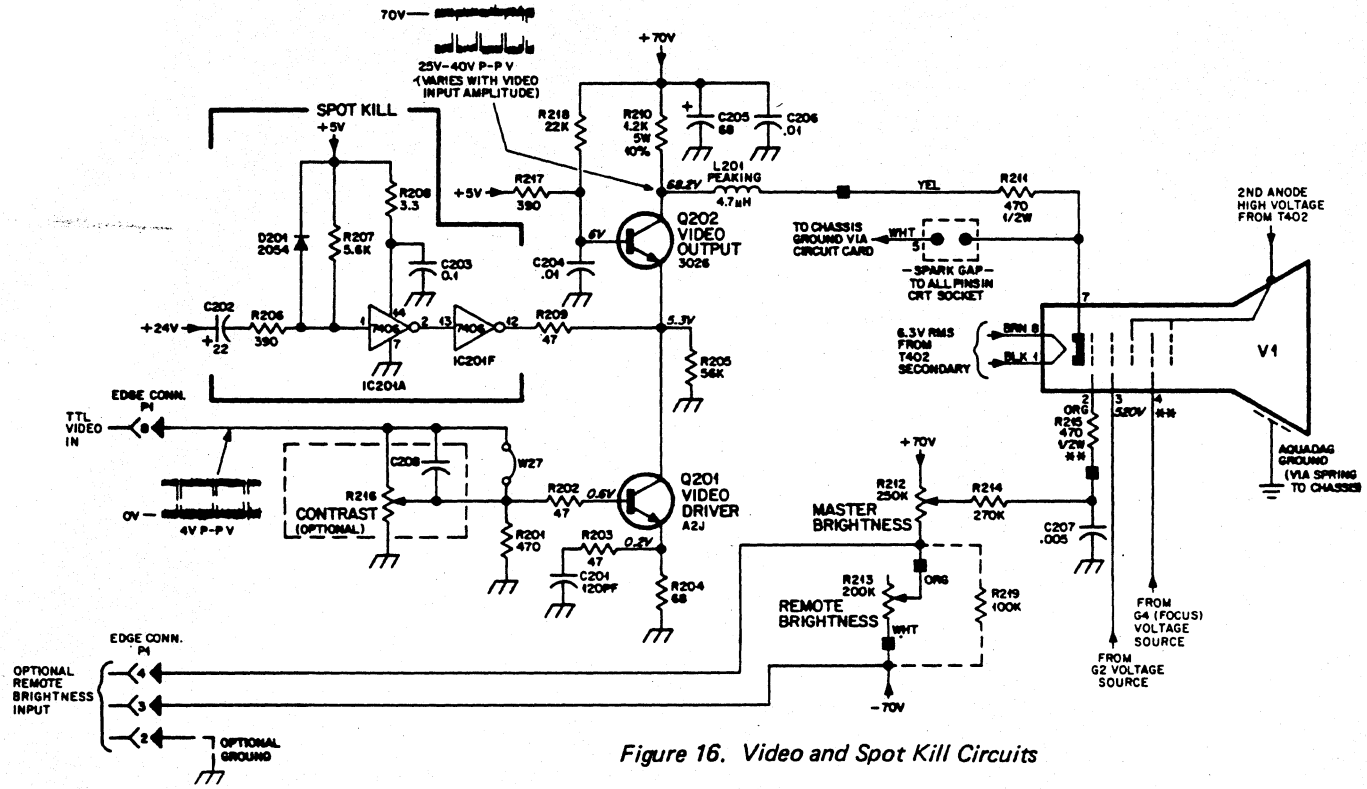


*Figure 16. Video and Spot Kill Circuits*

biased at 6.0V by R217 and R218. When a video signal is applied to the base of Q201, it turns on, allowing Q202 to conduct. The resultant output is developed across collector load resistor R210 and DC coupled to the CRT cathode via peaking coil L201 and resistor R211. Q202 is protected from CRT arcing by a spark gap built into the CRT socket, and R211 further isolates Q202 from transcients. Capacitor C204 shorts video frequency signals from the base of Q202 to ground. Peaking coil L201 increases the high frequency response of the video amplifier. Capacitor C205 provides filtering of the +70V supply, while C206 is a high frequency AC bypass capacitor to ground.

**SPOT KILL (Refer to Figure 16)**

When power is removed from the monitor, the horizontal and vertical scans collapse and a bright spot is left that will burn a spot in the phosphor screen unless prevented from doing so.

When the monitor is turned off, the decrease in the 24V supply voltage is coupled through capacitor C202 and resistor R206 to pin 1 of IC201A. This TTL input is normally held in the high state by resistor R207. The falling 24V supply switches IC201A to the low state at pin 1, which is inverted to a high at pin 2 of IC201A; then inverted to a low again by IC201F at pin 12. The open collector output of IC201F, now in the low state (conducting), pulls R209 to ground to become the emitter resistor of Q202. With 6.0 volts on its base, Q202 saturates. The resulting low collector voltage on Q202 is coupled to the CRT cathode causing it to conduct heavily. The large cathode current in the CRT discharges the second anode during scan collapse. The second anode is completely discharged before the scan currents collapse completely so that a spot can not form.

**STEPSCAN FUNCTION (Reference Figure 17)**

StepScan is useful when it is desired to display more rows of data characters than the existing "alphanumeric video" signal format will permit. A typical display consists of 240 horizontal scan lines which form character rows of data. Between each character row is a desired amount of blank spacing which is made up of horizontal scan lines without video information. By accelerating the vertical deflection between character rows, one (1) horizontal scan line could provide the spacing between rows that would normally be occupies by three (3) horizontal scan lines (see Figure 17). This would reduce the number of blank horizontal scan lines between character rows from three (3) down to one (1). However, the physical spacing between the character rows would not change. Since two (2) horizontal lines are saved between each row, a 24 row format will accumulate 48 unused scan lines. These 48 extra scan lines will reside at the bottom of the display since the CRT still scans a total of 240 horizontal lines. Therefore, the 48 additional lines at the bottom can also be used to display data. This means an additional six (6) rows of characters can be displayed. (For example, 7 lines for char. height plus 1 line for spacing = 8 lines per char. block. 48 unused lines divided by 8 char. block lines = 6 additional rows.)

**– NOTE –**

StepScan does not actually produce the six (6) additional rows; instead, it simply provides space (and horizontal lines) for them. The six (6) additional rows of video must be designed into the original video signal format during its development.

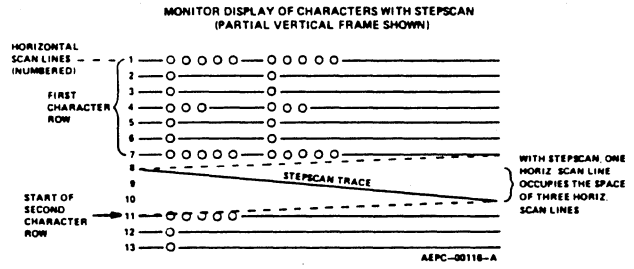


*Figure 17. Displaying Characters on a Monitor with StepScan*

## STEPSCAN CIRCUIT (Refer to Figure 18)

The StepScan circuit requires an external TTL positive-going pulse of approximately 4.0 volts P-P. These pulses are applied to pin 5 of IC201C through the protective network R501, D501 and D502. These pulses switch the TTL input of IC201C from the low state, normally maintained by resistor R502, to the high state. The open collector output of IC201C, pin 6, conducts during these pulses. These current pulses, regulated by control R504, are applied to the height control pin of the vertical processor, IC301. The slope of the output sawtooth current is increased during these pulses to "step" the vertical position to the next character.

The rate at which the vertical processor steps is determined by the repetition rate of the incoming SetpScan pulses. The slope (charge rate) of the stepped portion of the sawtooth is adjustable with the STEP ADJ. control, R504, which varies the spacing between the character rows. With the vertical sawtooth thus modified, the yoke vertical deflection current will be "stepped" during the line between character rows chosen. One additional component associated with StepScan operation is capacitor C307. It increases the response of IC301 internal amplifier output (pin 4) by coupling the leading edge of the StepScan pulses into the amplifier input of IC301 (pin 10).

## VERTICAL SCAN (Refer to Figure 18)

Input TTL level pulses pass through resistor R301 and protective diodes D301 and D302 to IC201B or IC201E inputs. The input to IC201B accepts, through jumper JU302, negative vertical sync and the input to IC201E accepts, through jumper JU301, positive vertical sync. R303 holds the input of IC201B low to prevent its output, an open collector, from shorting the input to IC201E when negative sync is not selected.

Output pulses from IC201E (pin 10) are differentiated by capacitor C301 and resistor R306. Diode D303 couples only the negative-going spikes from the differentiator circuit to the sync input of IC301 (pin 8). R307 and R308 provide input current limiting. The sync input (pin 8) performs several functions. It strips away any random noise that may be present on the input line and conditions the vertical pulses for processing. It also converts the input voltage pulses to current to control the internal oscillator. The oscillator generates a non-symetrical square wave with a short duty cycle at the vertical scan frequency (50 to 60 Hz). Components R310, R311 and C304 determine the frequency. This square wave signal is applied to a ramp generator whose slope and amplitude is determined by R312, R313, C305 and C306. The ramp voltage signal is applied to a buffer stage which isolates the ramp generator from the output stages and reduces any loading effect on the previous stages. Components R314, R316 and R315 reshape the ramp voltage to make it extremely linear.

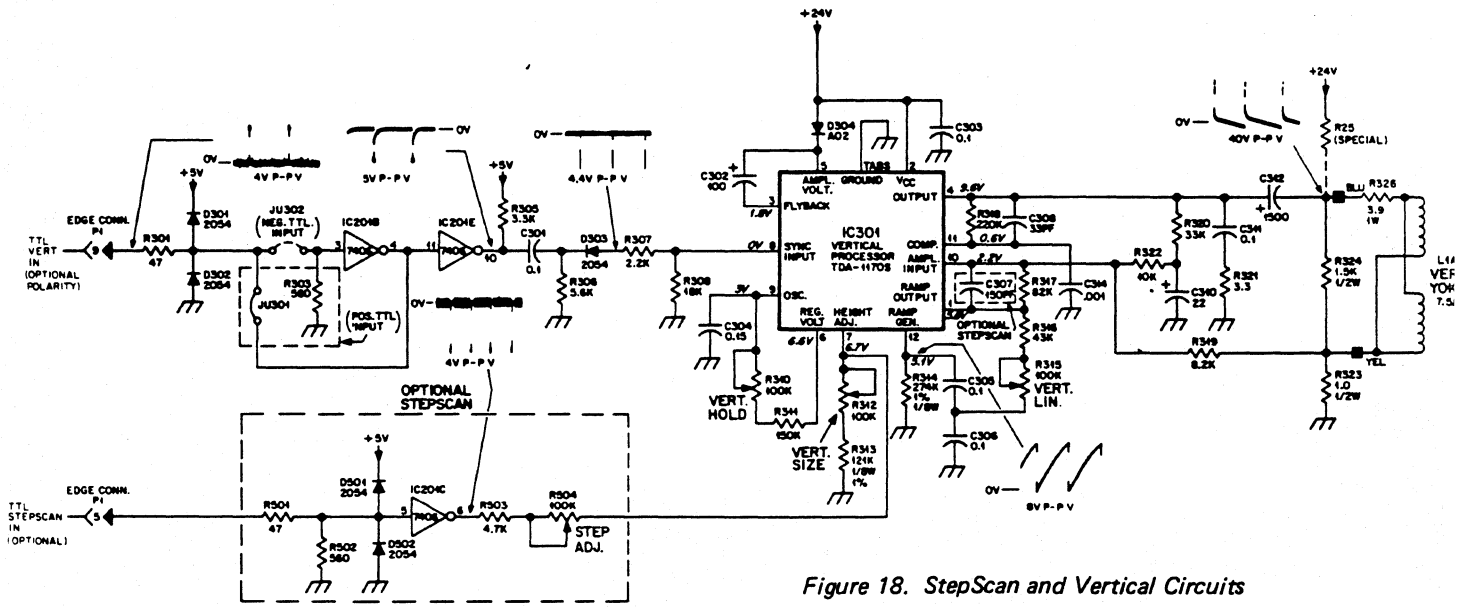


*Figure 18. StepScan and Vertical Circuits*

The output signal from pin 4 (IC301) drives the vertical deflection coils directly via coupling capacitor C312. Components R321 and C311 provide damping to prevent any oscillations in the output circuit. R320, R322, R319, R318, R323, C310 and C308 provide AC and DC feedback for the output stage to maintain proper gain and linearity. When the scan reaches the bottom of the screen a sync pulse initiates retrace. To insure a quick return to the top of the screen the voltage across the yoke is doubled during retrace to quickly discharge the yoke inductance. This voltage doubling circuit consists of diode D304, capacitor C302 and a transistor network in IC301. Capacitor C314 provides additional (external) compensation for IC301, pin 11. Resistor R325 (when present) is used to up-center the raster and video display.

## HORIZONTAL DRIVE/SYNC DELAY AND REGENERATOR (Refer to Figure 19)

TTL horizontal rate sync is coupled to the input of IC401B through the protective network consisting of resistor R401 and diodes D401 andD402. Jumpers W1 or W2 and W3 select positive or negative sync respectively. IC401B is a monostable multivibrator with its time constant being established by resistor R403, HORIZ. DELAY control R402, and capacitor C401. A positive pulse appears at pin 13 of IC401B, the leading edge coincident with the selected leading edge of horizontal sync and the trailing edge determined by the HORIZ. DELAY control, R402.

The falling edge of this pulse triggers IC401A, another monostable multivibrator, whose time constant (established by R406 and C403) regenerate a positive pulse at pin 5 of IC401A. Pulse width at this point is approximately equal to the input sync pulse. This pulse is inverted and increased in amplitude to 24V P-P by IC201D.

## PHASE DETECTOR (Refer to Figure 19)

The phase detector consists of two diodes D403 and D404 in a keyed clamp circuit. Its function is to develop a control voltage for synchronizing the horizontal oscillator with the incoming sync pulses. Two inputs are required to generate the required output; one from the horizontal sync regenerator IC401A, and one from the horizontal output circuit, Q402. The required output must be of the proper polarity and amplitude to correct phase differences between the input horizontal sync pulses and the horizontal time base. Each pulse from the collector of the horizontal output, Q402, is integrated into a sawtooth by R411 and C405. Capacitor C406 blocks DC from the collector of Q402. The output transistor of IC201D is normally at cut-off and its collector voltage rests at approximately 24 volts. Since C404 is connected to the output of IC201D, it will charge up to the collector voltage. When a pulse turns on and saturates the output of IC201D, its collector voltage drops to near ground potential. C404 will now discharge, coupling a negative-going sync pulse to the cathodes of D403 and D404. This negative potential is sufficient to forward bias both diodes to conduct and discharge any positive or negative charge on C405 to ground. In other words, it clamps the voltage on capacitor C405 during sync pulse time to approximately zero volts.

Without considering the sync pulses, the sawtooth wave would cause current flow into capacitor C405 when it is negative, and out of C405 when it is positive. Since the sawtooth is symmetrical about its AC axis, the charge and discharge currents of C405 are equal. C405 would therefore average a zero voltage level. A sync pulse (waveform A, Figure 20) clamping the sawtooth as it passes through its AC axis (waveform B, Figure 20), will not affect its positive and negative symmetry. Therefore, the average voltage on C405 would remain zero. However, if the horizontal time base begins to lag, the sync pulse will clamp the sawtooth to ground at a point below its AC axis, resulting in a non-symmetrical charge on C405. This clamping action will cause the sawtooth's AC axis to shift to a point above the

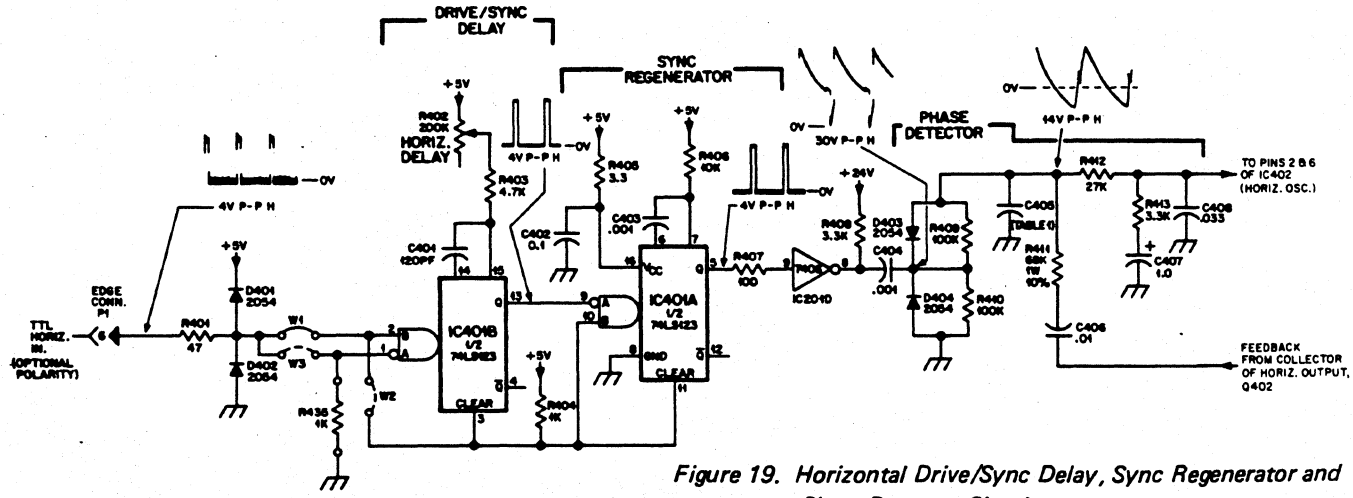


*Figure 19. Horizontal Drive/Sync Delay, Sync Regenerator and Phase Detector Circuits*

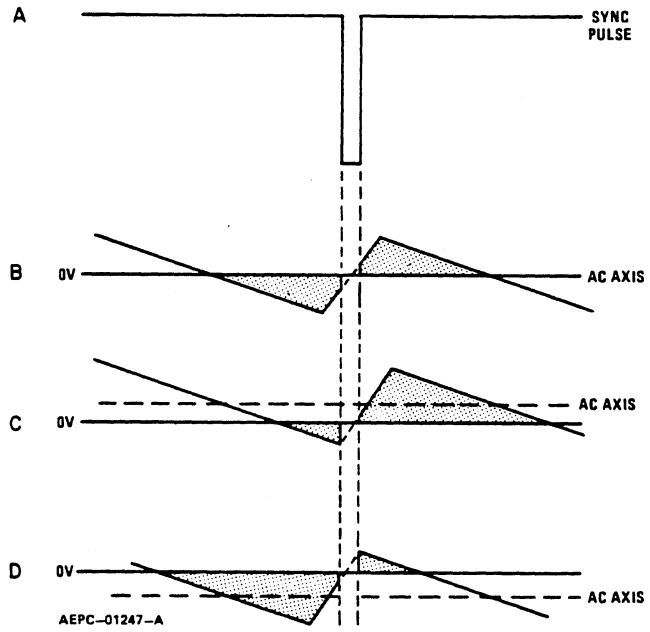


*Figure 20. Phase Synchronization Waveforms*

ground reference (waveform C, Figure 20). Therefore, most of the sawtooth's waveform is now above ground which will produce a positive voltage on C405. This is the correct polarity to cause the horizontal oscillator to speed up to correct the phase lag. Likewise, if the horizontal time base is leading the sync pulse, the sawtooth will be clamped to ground at a point above its AC axis. This clamping action will cause the sawtooth's AC axis to shift to a point below the ground reference (waveform D, Figure 20). Now most of the sawtooth's waveform is below ground, which will produce a negative voltage on C405. This is the correct polarity to cause the horizontal oscillator to slow down. The voltage level on C405 is dependent upon which point of the sawtooth is clamped. This also determines how far its AC axis will shift above or below ground.

R412, C407, R413 and C408 comprise the phase detector filter. The bandpass of this filter is designed to provide correction of horizontal oscillator phase without ringing or hunting.

## HORIZONTAL OSCILLATOR/DRIVER (Refer to Figure 21)

Integrated circuit timer IC402 operates as an astable square wave oscillator. Its free running frequency is determined by resistors R415, R416, and capacitor C409. The phase detector correction voltage is coupled through resistor R414 to pins 2 and 6 of IC402 to vary the frequency of the oscillator. A second input to IC402, pin 5, allows control of the oscillator free-run frequency by means of R418, HORIZ. HOLD control.

The non-symmetrical output of IC402 (pin 3) is coupled to the horizontal driver transistor, Q401, through C411 and current limiting resistor R419. D405 protects Q401 from reverse base-emitter voltage. Q401 operates as a switch to drive the horizontal output transistor Q402 through transformer T401. T401 is a voltage stepdown transformer to provide a low impedance drive to Q402. R421 is a current limiting resistor for Q401 and C414 is an AC bypass capacitor. R420 and C413 damp the transformer to prevent ringing when Q401 goes into cutoff.

## HORIZONTAL OUTPUT (Refer to Figure 21)

The secondary of T401 provides the required low drive impedance for Q402. Components R422 and C415 form a time constant for fast turn-off of Q402. The horizontal output transistor, Q402, is simply a switch that is turned on and off at the horizontal scan rate by the drive signal applied to its base. A sawtooth current through the deflection coils is required to sweep the beam linearly across the CRT screen. The sweep begins at the center of the CRT and sweeps to the right. This happens when Q402 is turned on and its collector voltage drops to near zero. C419 begins discharging through the deflection coils to deflect the beam to the right edge of the CRT. At this time, Q402 cuts off and C419 ceases to supply current to the deflection coils. However, an induced voltage appears across the deflection coil as the magnetic field collapses, and an oscillation occurs between the deflection coils and C416.

During the first half cycle of this oscillation, the induced voltage is felt across the collector of now cut off Q402, C416, and the primary of T402, the flyback transformer. This voltage is stepped up by T402 and rectified to produce the required high voltage that is applied to the 2nd anode of the CRT. The electron beam is also deflected to the left edge of the CRT at this time because the collapsing magnetic field of the deflection coils reverses polarity.

During the second half cycle of the deflection coils/C416 oscillation, the voltage on the collector of still cut off Q402 becomes negative. At this time, camper diode D406 becomes forward biased and begins conduction. The deflection coil current gradually decreases to zero during damper conduction allowing the beam to sweep linearly to the center of the screen.

The horizontal retrace pulse charges C422 through D407 to provide operating voltage for G2 of the CRT. Momentary transients at the colleator of Q402, should they occur, are limited to the voltage on C422 since D407 will conduct if the collector voltage exceeds this value. Coil L402 is a magnetically biased Horiz. Linearity coil that shapes the deflection current for optimum trace linearity. Coil L401 is a series Horiz. Width control. Components R425 and C418, R424 and C417 are damping network components for the Horizontal Linearity (L402) and Width (L401) controls.

The 24 volt supply to the horizontal output is coupled through diode D409 to pin 3 of the transformer, T402. Autoformer action of the transformer boosts the effec-

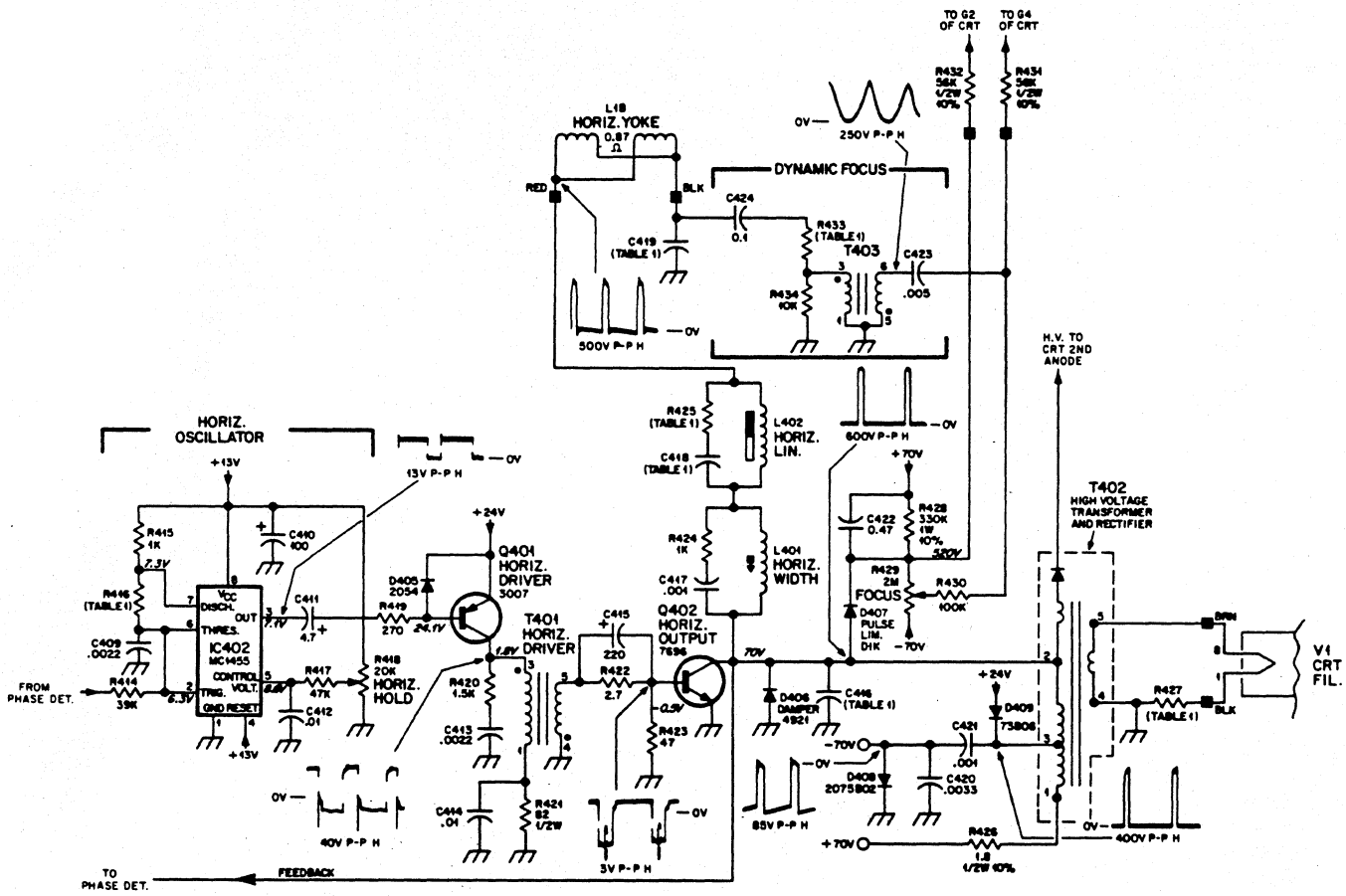


*Figure 21. Horizontal Oscillator, Driver and Output Circuits, and Dynamic Focus Circuit*

tive supply voltage to the transformer to the 70 volts appearing on pin 1 of T402. This voltage is filtered by C205 and provides the 70 volt source for the chassis. A capacitive divider, C421 and C420, and diode D408 provides a −70 volt supply for the CRT G1 electrode.

### DYNAMIC FOCUS (Refer to Figure 21)

Due to the geometry of a CRT, the electron beam travels a greater distance when deflected to a corner as compared to the distance traveled at the center of the CRT screen. As a result of these various distances traveled, optimum focus can be obtained at only one point. For general applications, an adequate adjustment can be realized by setting the focus while viewing some point mid-way between the center of the CRT screen and a corner, thus optimizing the overall screen focus. When an application requires a tighter specification, one of the simplest methods for improvement is to modulate the focus voltage at a horizontal sweep rate. Now optimum focus voltage is made variable on the horizontal axis of the CRT, which compensates for the beam travel along this axis. The AC component of the focus voltage is developed by stepping up the voltage across capacitor C419 via transformer T403. The linear current ramp in the horizontal yoke winding, L1B, also flows through capacitor C419. The ramp is integrated, the result being a parabolic waveform. This parabola is coupled through capacitor C424 and resistor R433 to the primary of transformer T403. The approximately 250V P-P parabola present at pin 6 of T403 is superimposed on the DC voltage from the FOCUS control, R429, via capacitor C423. This mixed AC and DC voltage results in a waveform of proper phase and amplitude, which is coupled through isolating resistor R431 to the CRT focus anode.

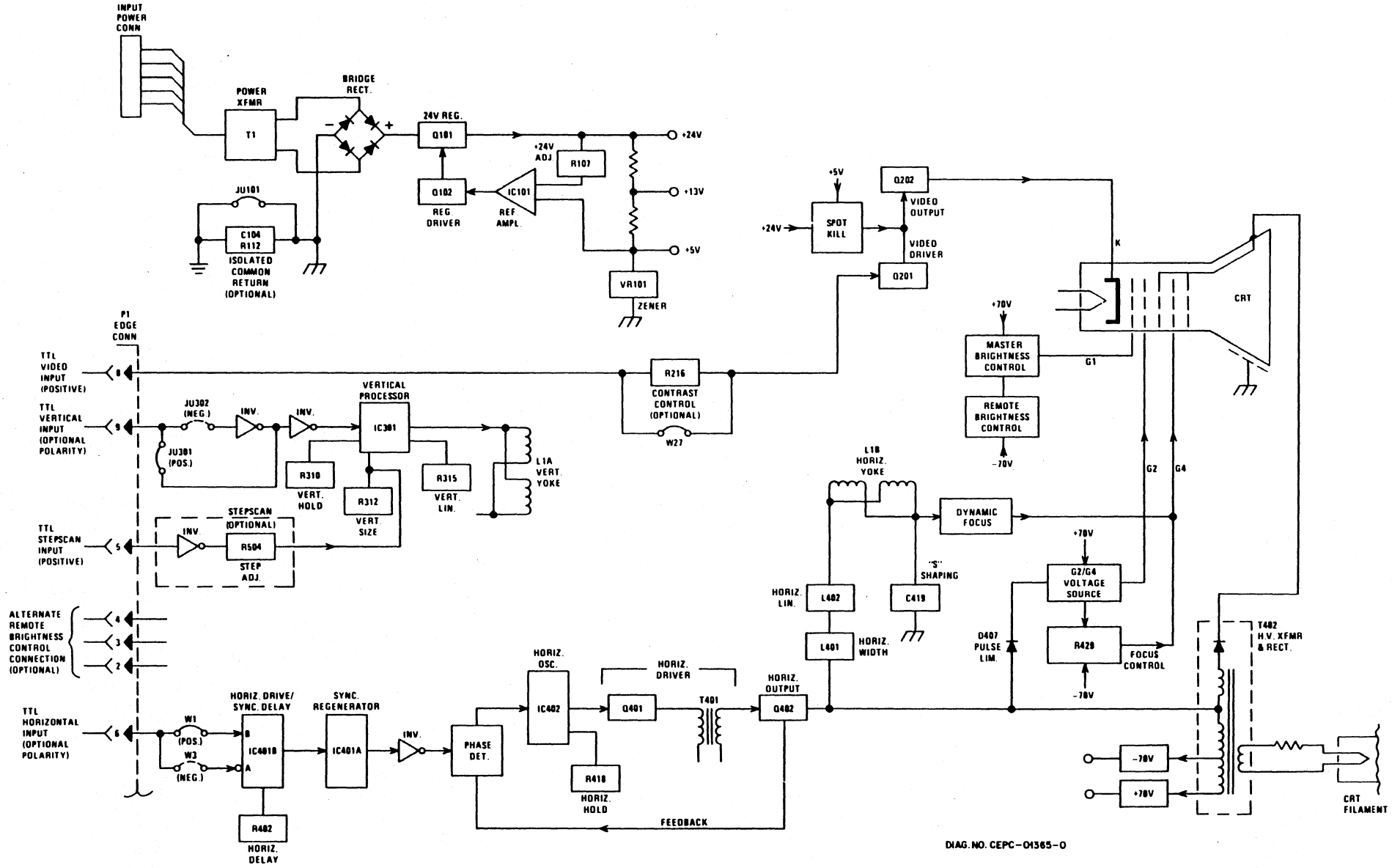


*Block Diagram*

BASE PLATE ASSY, COMPLETE PN- 916025
MOTOROLA ADM-42 MONITOR ASSY

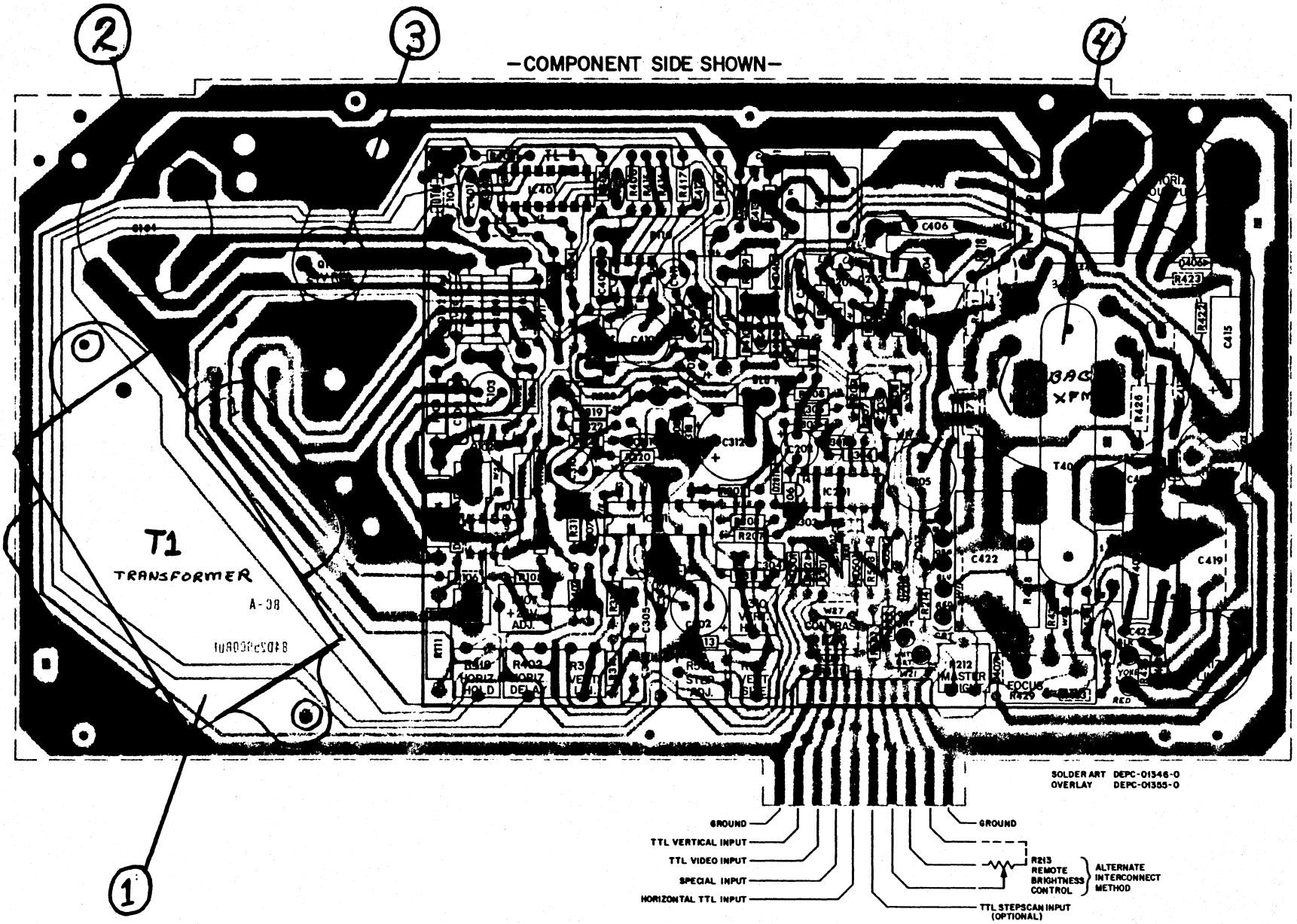


ASSY 916025 *Circuit Card Layout – Component Side*

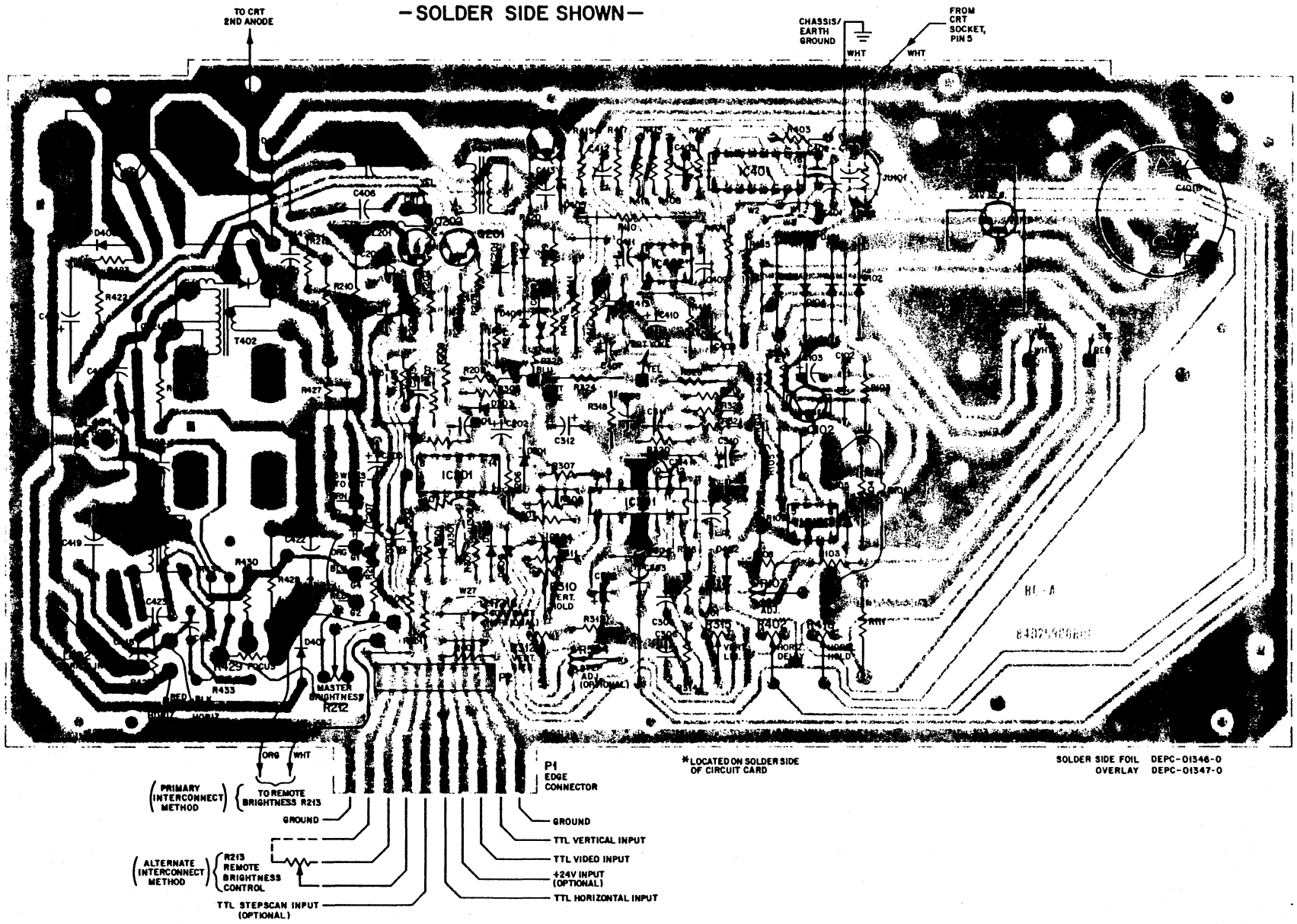


*Circuit Card Layout – Solder Side*

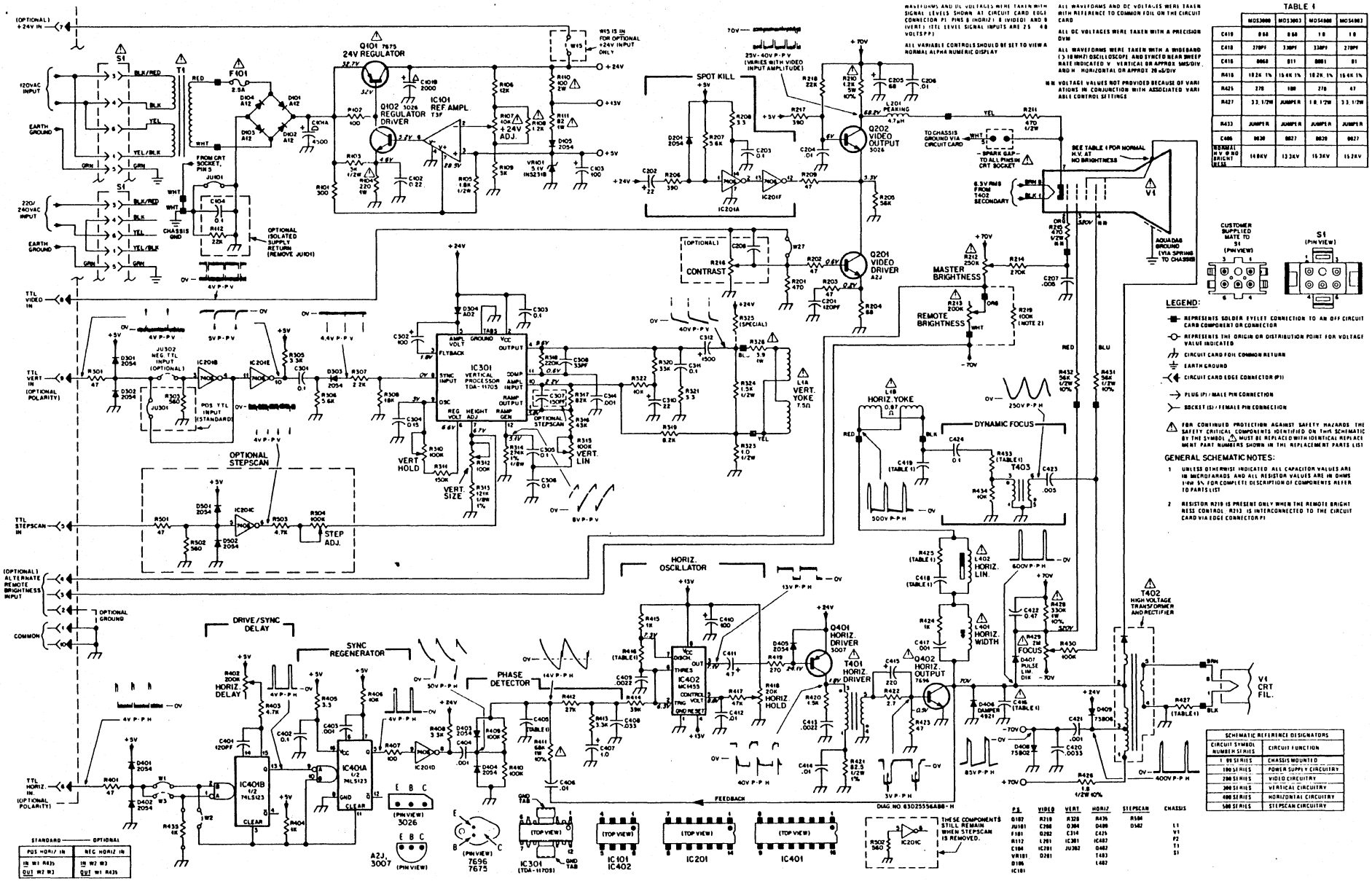

# BASIC MDS SERIES SCHEMATIC DIAGRAM

*(Use in conjunction with Service Manual 68P25253A82; VP38)*

# SM-12DN4KA

## DATA DISPLAY MONITOR

SAMSUNG ELECTRON DEVICES CO., LTD.

| REV. NO | DATE | BY | APPD. | REVISION DESCRIPTION |
|---|---|---|---|---|
| | | | | |

| MODEL | SED P/N | CUSTOMER P/N |
|---|---|---|
| SM-12DN31KA | 012-22-901 | 132509-002 |
| SM-12DN4KA | 012-12-901 | 132509-001 |

MONITOR PART NUMBER

| | |
|---|---|
| DATE | Apr. 15, 1981 |
| ORIGI. APP. | H. D. JANG Hyun Duk JANG |
| DESIGN | W. S. SHIN SHIN W. S. |
| CHECK | S. H. JEONG |
| APPD. | D. JO |

**SAMSUNG**
ELECTRON DEVICES CO., LTD.
COMPUTER DIVISION

TITLE

12" MONITOR ENGINEERING SPECIFICATION

| DOCUMENT NUMBER | REVISION |
|---|---|
| L012-12-901 | |

DEVICE: SM-12DN4KA CUSTOMER CODE: LS-001

SPEC. NO: F-018 SHEET i OF ii

CONTENTS


| SECTION | | PAGE |
|---|---|---|
| I. | Specifications | |
| | A. Cathode Ray Tube | 1 - I |
| | B. Electrical characteristics | 1 - I |
| | C. Picture quality | 2 - I |
| | D. Controls | 2 - I |
| | E. Environmental | 2 - I |
| | F. Weight | 2 - I |
| | G. Input signal connection | 3 - I |
| | H. Input connector | 3 - I |
| | I. Others | 3 - I |
| II. | Service information | 1 - II |
| | A. Adjustments | 1 - II |
| III. | Troubleshooting for respective symptoms | 1 - III |
| IV. | Figures | 1 - IV |
| | A. Timing chart. (FIG.1) & (FIG.2) | 1 - IV |
| | B. Adjustors,connector & cabling locations.(FIG,3) | 2 - IV |
| | C. Voltage waveforms.(FIG.4) | 3 - IV |
| | D. P.C.board assy dimensions.(FIG.5) | 4 - IV |
| | E. Mechanical dimensions for C.R.T (12ZB) (FIG.6) | 5 - IV |
| | F. Monitor display area. (FIG.7) | 6 - IV |
| V. | Drawings. | 1 - V |
| | A. Schematic 12" monitor | 1 - V |
| | B. Components location (component side) | 2 - V |
| | C. Components location (copper side) | 3 - V |
| VI. | Parts list | 1 - VI |
| VII. | Appendix | 1 - VII |

## SECTION I. SPECIFICATIONS

A. Cathode Ray Tube (12 ZB)

1. Size : 12 inch diagonal.
2. Deflection angle : $90^{o}$
3. Glass area : 74 square inches.
4. Implosion protection : Tension band with mounting lugs.
5. Phosphor : P4
6. Anode voltage : Approx. 11.5KV
7. Display size : 8.3/8"(H) x 5.3/4"(V)
8. Face : Direct etched.

B. Electrical characteristics

1. Video : TTL positive going pulse(4.0Vp-p±1.5V)

   Input impedance: More than 3.3Kohms shunted by 60PF.
   Rise and fall time: 35nano-seconds or less.

   Video bandwidth: 18MHZ

2. Horizontal : TTL positive going pulse(4.0Vp-p±1.5V)

   Input impedance : More than 470ohms shunted by 40PF.

   pulse width: 22 to 30 micro-seconds at 16.2KHZ
   18 to 24 micro-seconds at 19.2KHZ
   Scan frequency: 19.2± 0.5KHZ
   16.2± 0.5KHZ by changing a jumper(JPR1B to JPR1C)

   Retrace time: Approx. 7.5micro- seconds.

3. Vertical : TTL negative going pulse(4.0Vp-p±1.5V)

   input impedance : More than 3.3Kohms shunted by 40PF
   pulse width:5 to 1000 micro-seconds.

   Scan frequency : 47 to 63 HZ

   Retrace time : 926 micro-seconds.

4. Power : 15VDC±0.2V/0.8AMP or less nominal

* Note : Refer to timing chart figure 1.

C. Picture quality

1. Resolution : 900TV lines at center.
800TV lines at corners at 40 footlambert.

2. Geometric distortion: The outside dots of all outside rows and columns shall fall within the area defined by the space between the two rectangles shown in FIG 6. This alignment shall fulfill the Pincushioning, barreling, parallelogram and trapezoidal distortion requirements of the monitor display area.

3. Horizontal linearity: Less than 10% for adjacent characters.
Less than 20% for any two characters on the entire display field.

4. Vertical linearity : Same as for horizontal linearity.

5. Display capability : 80 characters per row. 24 rows.

D. Controls

1. Brightness : Internal.

2. Contrast : External (User will supply external control volume and wire)

3. Vertical hold : Internal.

4. Vertical height : Internal.

5. Vertical linearity : Internal.

6. Horizontal width : Internal.

7. Horizontal linearity: Internal.

8. Focus-static : Internal.

E. Environmental

1. Operating temperature: $+5^{o}C$ through $+55^{o}C$

2. Storage temperature : $-35^{o}C$ through $+60^{o}C$

F. Weight

1. Kit form : Approx. 4 Kg

G. Input signal connection

| | | |
|---|---|---|
| 1 | ..... | Ground(H.D return. power return) |
| 2 | ..... | Not Applicable |
| 3 | ..... | Not Applicable |
| 4 | ..... | Not Applicable |
| 5 | ..... | ARC ground. |
| 6 | ..... | Horizontal input. |
| 7 | ..... | 15V DC. |
| 8 | ..... | Video input. |
| 9 | ..... | Vertical input. |
| 10 | ..... | Ground(V.D return, video return) |

H. Input connector

Board edge connector

* Viking # 2VK 10S/1-2
* Amphenol # 225-21031-101
* Hirose # CR8E-20DA-3.96E
* Or equivalent

I. Others

All components are capable of meeting UL,CSA and DHEW requirement.

## SECTION II. SERVICE INFORMATION

### A. ADJUSTMENTS

#### 1. BRIGHTNESS

Normally, the monitor will be used to display alphanumeric or other black and white information. Moreover, the video polarity is usually white characters on a black background.

The internal brightness control should be adjusted at a point where the white raster is just extinguished. The CRT will then be at its cutoff point, and a maximum contrast ratio can be obtained when a video signal is applied.

#### 2. VIDEO CONTRAST

Q201 is designed to operate linearly where a +2.5V signal is applied to its base. This control, or a fixed resistor,should be adjusted for a typical signal level of +2.5V peak-to-peak when measured at the video input terminal of the printed circuit board edge connector.

In all cases, the output DC impedance of the video signal source must be 500ohms, or less.

#### 3. VERTICAL ADJUSTMENTS

There is a slight interaction among the vertical frequency, height, and linearity controls. A change in the height of the picture may affect linearity.

a. Set the vertical-hold control, R302 near the mechanical center of its rotation.

b. Adjust the vertical linearity control, R306 for best vertical linearity.

c. Adjust the vertical height control.R304 for desired height

d. Readjust the vertical hold control.R302 until the picture "locks" on vertical sync.

e. Recheck height and linearity, and readjust if necessary.

f. Slight readjustment of vertical hold control, R302, may be required if the picture "rolls" up or down after a power OFF/ON sequence.

4. HORIZONTAL ADJUSTMENTS

Raster width is affected by a combination of the DC power supply, horizontal width coil L402 and the horizontal linearity coil L403.

a. Horizontal linearity.

When character width variation is observed in characters of one row, turn the core of adjustor L403 so that character widths should become uniform.

b. Horizontal width.

Adjust horizontal width by turning the core of L402 with a plastic hexdriver for the desired width.

c. Readjust horizontal linearity and width coil, for proper width.

d. Observe final horizontal linearity and width, and touch up either adjustment if needed.
The raster should be properly locked and centered when the horizontal drive signal adjustments (described in steps a-d above) have been completed.

5. DEFLECTION YOKE ASSEMBLY ADJUSTMENTS

a. Raster centering

If the raster is not properly centered, it may be repositioned by rotating the ring magnets behind the deflection yoke.

The ring magnets should not be used to offset the raster from its nominal center position because it would degrade the resolution of the display.

If the picture is tilted, rotate the entire yoke.

b. Geometric corrections

The magnets on the yoke assembly shall be polarized so as to provide adjustment of pin-cushion, barreling and other geometric deformities by simply rotating the magnets until the desired display is achieved. Readjust if necessary.

6. FOCUS ADUSTMENT

Although the focus control, R508.does not have a large effect on focus because of the CRT gun-assembly construction. It provides some adjustment for maintaining the best overall display focus.

## SECTION III. TROUBLESHOOTING FOR RESPECTIVE SYMPTOMS

A. No Raster

1. Turn the internal brightness control clockwise fully.

   If raster appears : Good

   If raster does not appear : No good. To next check.

2. Is CRT heater on?

   It is not on : Check CRT, heater voltage, power supply circuit and CRT socket for normality.

   It is on : Proceed to next check item.

3. Check high voltage by high-voltage voltmeter.

   High voltage is not obtained :

   Check of flyback transformer T402. Check of collector pulse of Q404. check of base pulse of Q404, check of collector and base waveforms of Q403, check of input HD.

   High voltage is obtained : To next check item.

4. Check respective CRT electrode voltages for normality with a multi-tester.

   G2 : 350V - 450V

   G4 : -100V - +400V

   G1 : -100V - +20V

   K : 0 - +50V

   When voltages of G2 and G4 are not obtained :

   Check of CR501, CR503. C501. C503. R501. R503. R505, R507 R508. R509. and T402.

   Voltage of G1 is not obtained :

   Check of CR502. CR503. C502. C503. C504. R502, R506, R510 R511, E502 and T402.

   Voltage of K is not obtained :

   Check of CR502. C502. R204. R206. E501. and T402

   Voltages of G2, G4. G1. and K are normal :

   CRT is faulty Replace CRT.

B. Only one raster line appears in horizontal direction.

Check of deflection yoke vertical coil
When deflection yoke vertical coil is shorted or opened. deflection yoke is faulty and should be replaced. When 30-50 OHMS, the coil is good.

C. Only one raster line appears in vertical direction

Wire breakdown or deflection yoke horizontal coil or L402, L403, or C413 open.

D. Raster is deformed abnormally.
Rare shorting of deflection yoke coil, replace deflection yoke.

E. Raster runs abnormally as if winding or excessive picture fluctuation is caused.

Check by measurement that ripples of power supply is less than 10mV p-p. when ripples are normal, check to determine whether there is any such source that causes alternating magnetic field near the unit.

F. When power is turned off, spot remains.

Check C502, C503, and CRT for deterioration.

G. Brightness range is abnormal.

Deterioration of CR503, C503. or CRT, Check of voltage of G2.
Check of heater voltage.
Check of Q201, and E501. check of R203.R204, R205, and check of CR502, and C502

H. Raster size is small and picture is abnormally bright (high voltage is abnormally high.)

Check of C409, and C410. Check of T402

I. Vertical synchronization is not achieved.

Check of VD. Check of C301.C302. CR301, R301. R302, and U301

J. Raster position is deviated relative to CRT face.

Turn deflection yoke centering magnet so that raster should be positioned at center.

K. Picture or characters do not appear. contrast is unachievable.

Check of Q201 and associated components. Check of input signal. Check of CRT.

L. Picture or characters are displayed but inclined.

Untighten clamp screw on deflection yoke. Rectify the inclination by turning the entire deflection yoke.

M. Fine noises appear is the picture and characters shiver.

Check high-voltage portion for leakage.
Check connectors for complete contact.
Check FBT for wire breakdown.

N. It takes long for picture to appear (more than 15 seconds.)

Service life of CRT has reached. Replace CRT.

O. Sync noise not related with input data appears in picture.

Check grounding wire for poor contact. VIDEO grounding for incompleteness, input signal for normality, and power supply return for incompleteness.

P. Picture appears and disappears alternately.

Check of input signal. Check of card edge connector. Check of video circuit for poor soldering. Check of CRT socket.

Q. Horizontal linearity is not achieved.

Check of L403. C413. and Q404

R. Vertical linearity is not achieved.

Check of R305, R306. R307. C304. C305. and U301

S. Focusing is not achievable.

Check of voltages G2 and G4. Readjustment of R508.
Check of high voltage. Check of CR501, R501, C501, R503,and R509
When all above items are normal. CRT is faulty and should be replaced.

Note : Refer to voltage waveforms(Figure 1.)

# SECTION IV FIGURES

## TIMING CHART

AT HORIZONTAL DIRECT DRIVE
H= 19200 Hz
V= 60 Hz
V RETRACE TIME= 926 μSec.

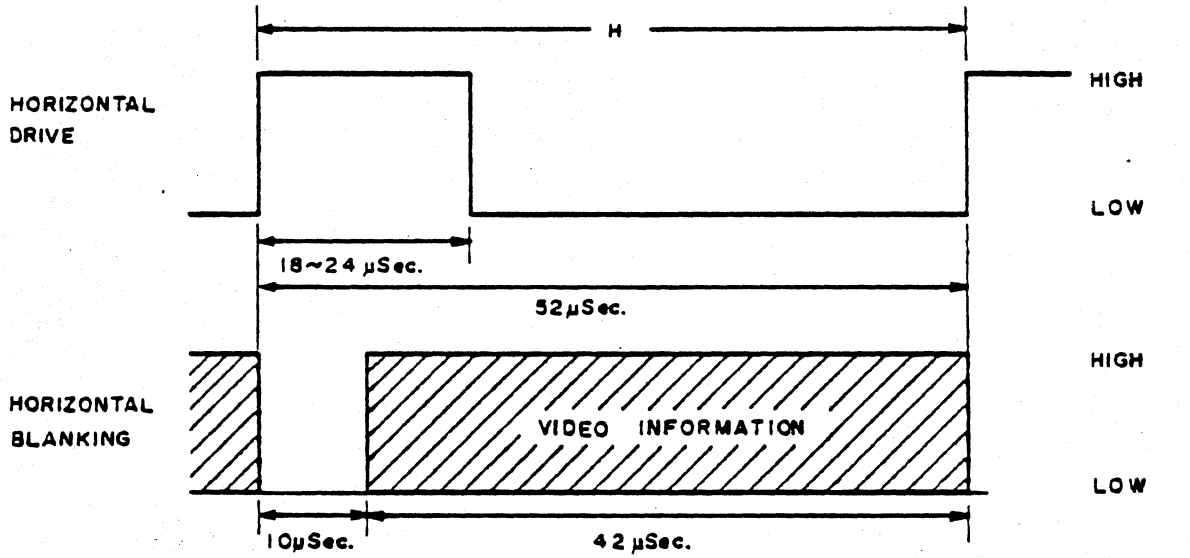


HORIZONTAL BLANKING TIME

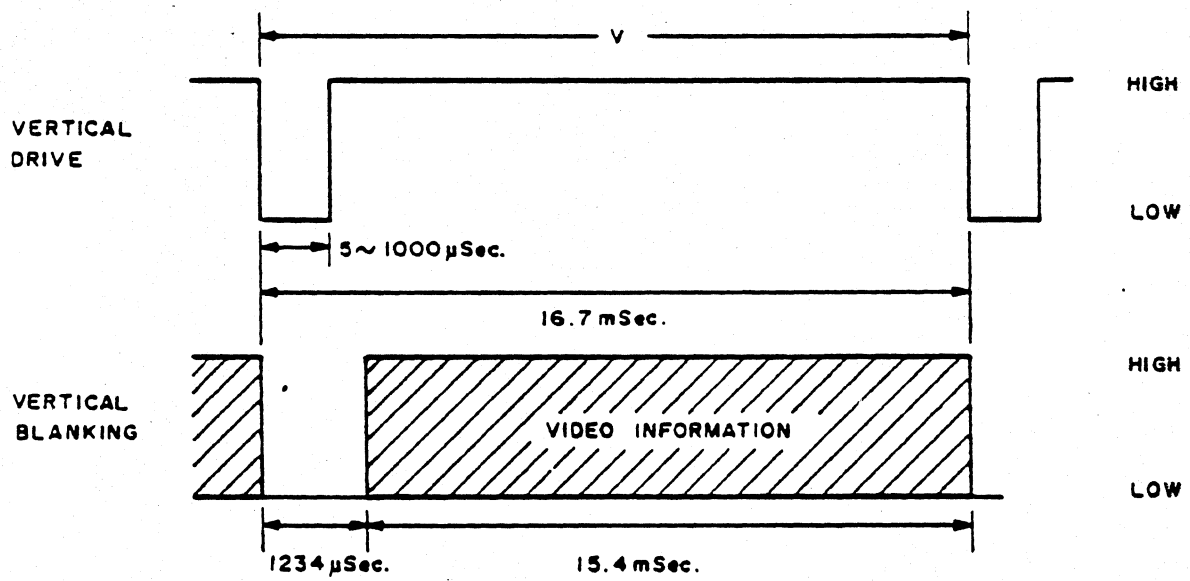


VERTICAL BLANKING TIME

(FIG.1)

| CUSTOMER CODE | DEVICE | TITLE | SPEC. NO. | PAGE |
|---|---|---|---|---|
| LS-001 | SM-12DN4KA | 12"Monitor ENG.SPEC. | E-018 | 1A OF IV |

# TIMING CHART

AT HORIZONTAL DIRECT DRIVE
H= 16200 Hz
V= 60 Hz
V RETRACE TIME = 926μSec.

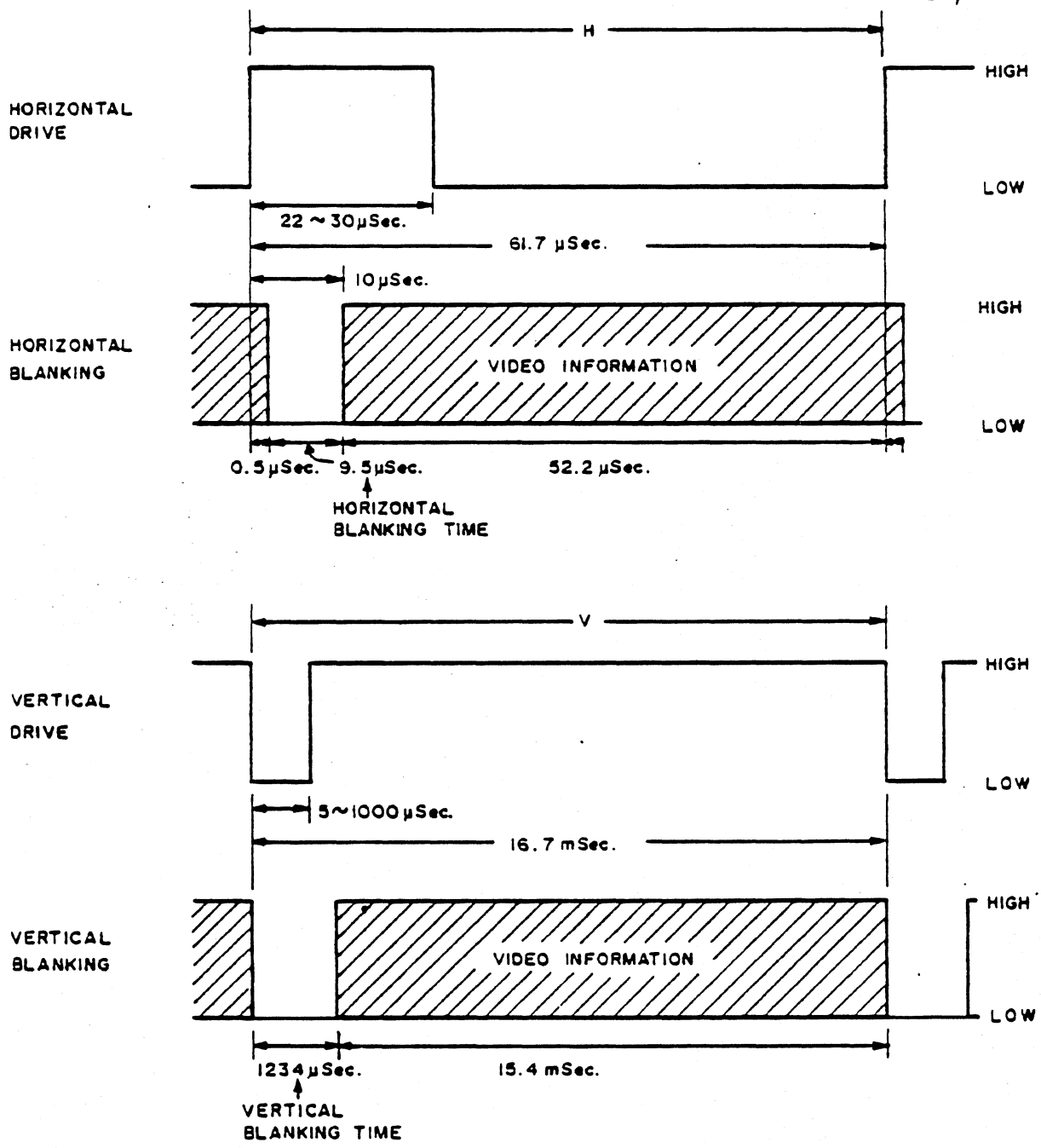


(FIG. 2)

| CUSTOMER CODE | DEVICE | TITLE | SPEC. NO. | PAGE |
|---|---|---|---|---|
| LS-001 | SM-12DN4KA | 12"Monitor ENG.SPEC. | E-018 | 1B OF IV |

| CUSTOMER CODE | DEVICE | TITLE | SPEC. NO. | PAGE |
|---|---|---|---|---|
| LS-001 | SM-12DN4KA | 12" Monitor ENG. SPEC. | E-018 | 2 OF IV |

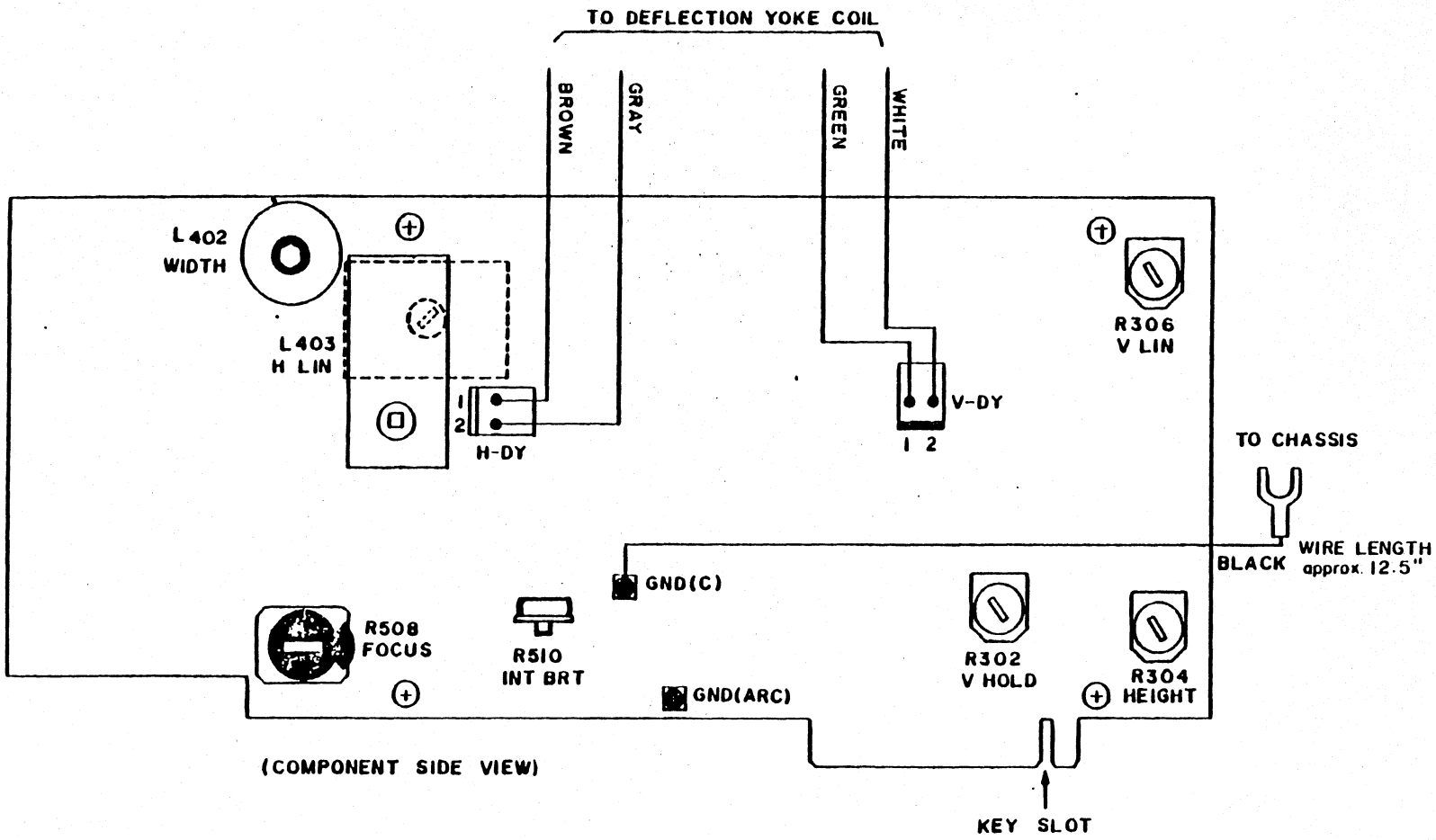


## ADJUSTORS, CONNECTORS & CABLING LOCATIONS

(FIG. 3)

# VOLTAGE WAVEFORMS

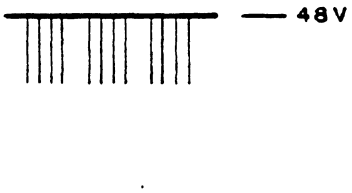


Q 201 ( COLLECTOR )

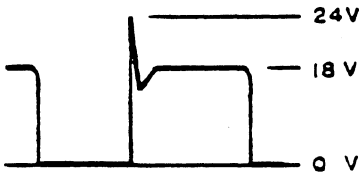


Q 403 ( COLLECTOR )

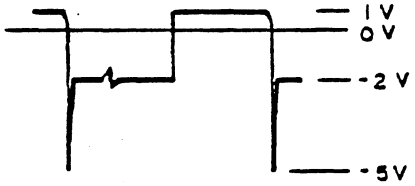


Q 404 ( BASE )

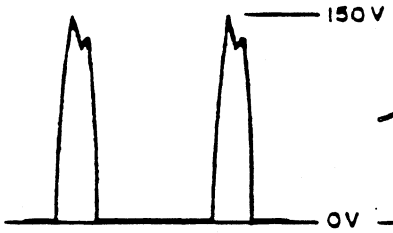


Q 404 ( COLLECTOR )

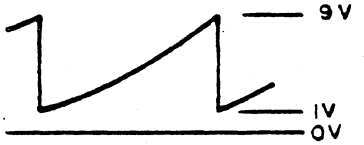


PIN 1 OF U301

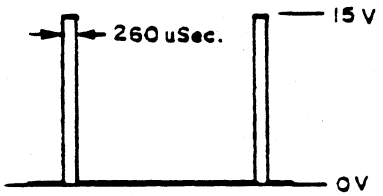


PIN 3 OF U301

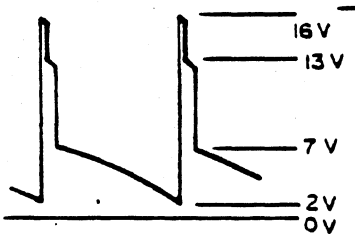


PIN 4 OF U301

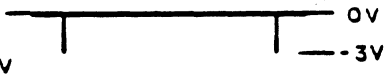


PIN 8 OF U301

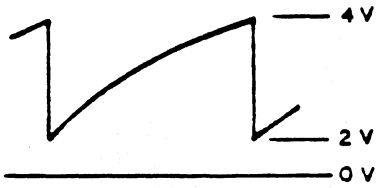


PIN 9 OF U301

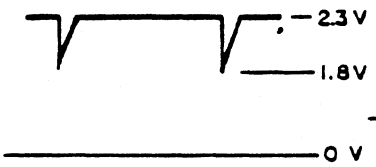


PIN 10 OF U301

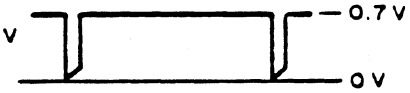


PIN 11 OF U301

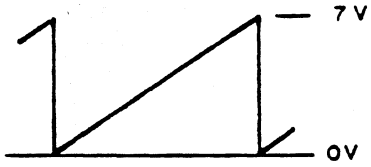


PIN 12 OF U301

(FIG. 4)

| CUSTOMER CODE | DEVICE | TITLE | SPEC. NO. | PAGE |
|---|---|---|---|---|
| LS-001 | SM-12DN4KA | 12"Monitor ENG. SPEC. | E-018 | 3 OF IV |

# PC BOARD ASSY DIMENSIONS

INCH
(mm)

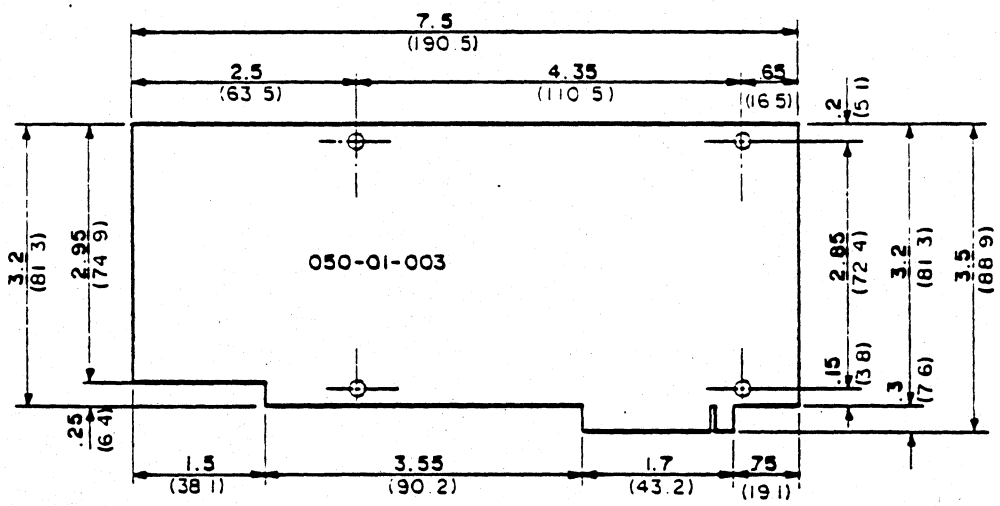


( COMPONENT SIDE VIEW )

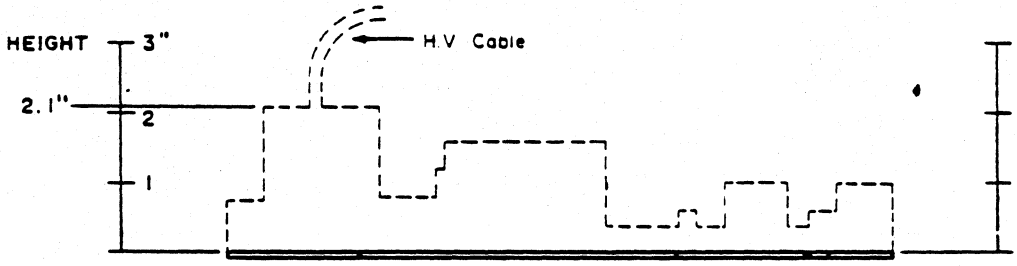


( FRONT SIDE VIEW )

(FIG.5)

| CUSTOMER CODE | DEVICE | TITLE | SPEC. NO. | PAGE |
|---|---|---|---|---|
| LS - 001 | SM-12DN4KA | 12"Monitor ENG.SPEC. | E-018 | 4 OF IV |

Mechanical Outline. MECHANICAL DIMENSION Dimension in MM.

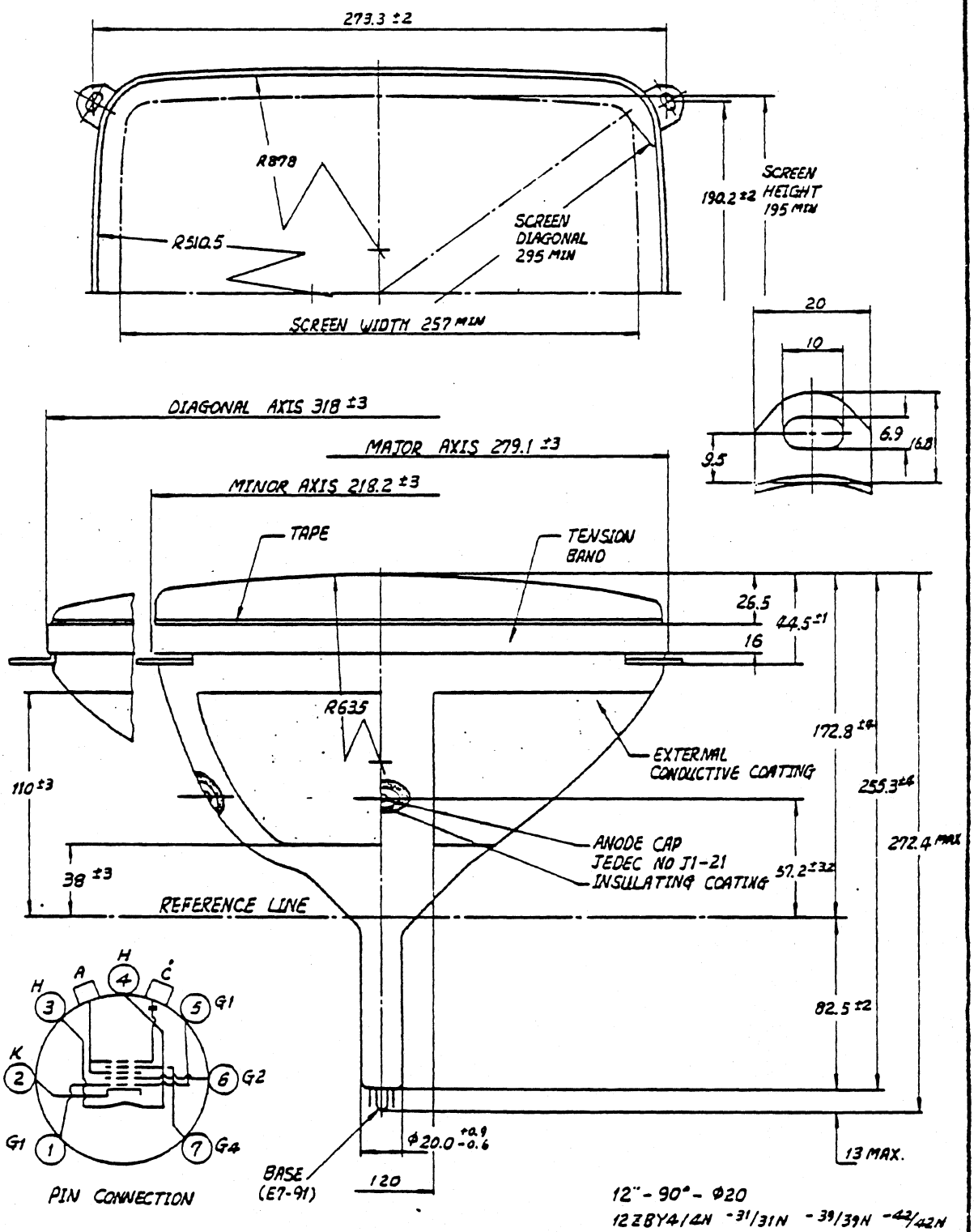


12"-90°-φ20
12ZBY4/4N -31/31N -39/39N -42/42N
12ZBZ4/4N -31/31N -39/39N -42/42N

1981. 2. 1
CF 007 - D1200 - 1

(FIG. 6)

| CUSTOMER CODE | DEVICE | TITLE | SPEC. NO. | PAGE |
|---|---|---|---|---|
| LS - 001 | SM-12DN4KA | 12"Monitor ENG.SPEC. | E - 018 | 5 OF IV |

## 12" MONITOR DISPLAY AREA

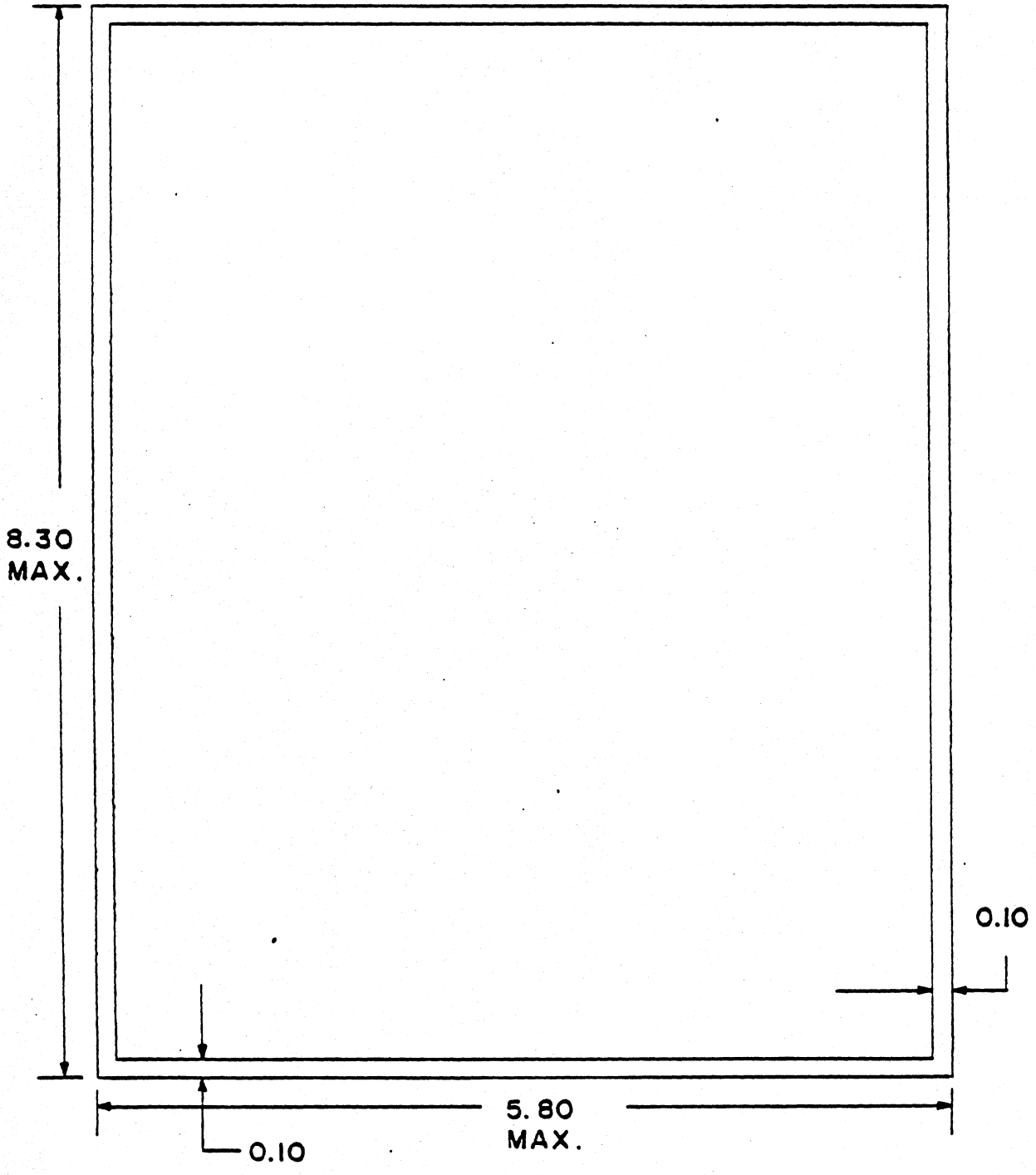


(FIG.7)

| CUSTOMER CODE | DEVICE | TITLE | SPEC. NO. | PAGE |
|---|---|---|---|---|
| LS-001 | SM-12DN4KA | 12"Monitor ENG.SPEC | E-018 | 6 OF IV |

| PART NUMBER | DESCRIPTION | QTY | LOCATION |
|---|---|---|---|
| 916030 | Monitor control board assy SAMSUNG. (when ordering this board, please note if board is for the ADM32 or not, The MCB for the 32 must have an extra long cable to monitor installed.) | 1 | see breakdowr |
| 919020 | TUBE, std crt Samsung | 1 | |
| 919018 | TUBE, Green crt, Samsung | | |
| 919019 | YOKE Assy, Samsung | 1 | |
| 902525 | Magnet, ring type (for yoke) | A/R | |

THE ABOVE PARTS ARE FOR THE SAMSUNG MONITOR ASSY ONLY!

| | |
|---|---|
| 132509-003 | Monitor Assy, white (std) Samsung |
| 132509-004 | Monitor Assy, Green Samsung |

LEAR SIEGLER INC.
DATA PRODUCTS DIVISION

ASSY 916030 MONITOR CONTROL BOARD ASSY, SAMSUNG

| PART NUMBER | DESCRIPTION | QTY | LOCATION |
|---|---|---|---|
| 905355 | Cap 100uf 25V Electro | 2 | C103,412 |
| 905045 | Cap 680pf 50V Ceramic | 1 | C201 |
| 905435 | Cap 0.001uf 50V mylar | 1 | C301 |
| 905434 | Cap 0.15uf 100V mylar | 1 | C302 |
| 805022 | Cap 0.1uf 100V mylar | 4 | C304,305, 306,309 |
| 905046 | Cap 22pf 50V Ceramic | 1 | C306 |
| 905308 | Cap 1000uf 16V Electro | 2 | C307,411 |
| 905365 | Cap 47uf 16V Electro | 2 | C308,408 |
| 905436 | Cap 0.01uf 100V Mylar | 1 | C407 |
| 905716 | Cap 0.01uf 400V Poly | 1 | C409 |
| 905717 | Cap 0.022uf 400V poly | 1 | C410 |
| 905366 | Cap 16uf 63V bi-polar | 1 | C413 |
| 905718 | Cap 0.047uf 630V poly | 1 | C501 |
| 905367 | Cap 220uf 50V Electro | 1 | C502 |
| 905437 | Cap 0.01uf 200V mylar | 1 | C503 |
| 905368 | Cap 3.3uf 50V electro | 1 | C504 |
| 905719 | Cap 0.01uf 630V poly | 1 | C505 |
| 908033 | Diode IN60FM Germanium | 1 | CR301 |
| 908528 | Diode U06E Silicon | 2 | CR402,403 |
| 808022 | Diode IN4007 Silicon | 1 | CR501 |
| 908034 | Diode IN4003 Silicon | 1 | CR502 |
| 908011 | Diode IN4004 Silicon | 1 | CR503 |
| 917039 | Coil, Horiz width HW-160 | 1 | L402 |
| 917040 | Coil, Horiz Linearity DL-284 | 1 | L403 |
| 910030 | Trans 2N2219 | 1 | Q201 |
| 910530 | Trans KCS1008 | 1 | Q403 |
| 910510 | Trans BU407 | 1 | Q404 |
| 913025 | IC TDA1170 | 1 | U301 |
| 916029 | Flyback Transf. output TMF-110 | 1 | T402 |
| 916988 | Transformer, Horiz Drive | 1 | T401 |

ASSY 916030 cont. MONITOR CONTROL BOARD ASSY, SAMSUNG

| PART NUMBER | | DESCRIPTION | QTY | LOCATION |
|---|---|---|---|---|
| 128533-330 | FS | Res 33 ohm 5% $\frac{1}{4}$w | 1 | R201 |
| 128533-470 | FS | Res 47 ohm 5% $\frac{1}{4}$w | 1 | R203 |
| 903719 | | Res 680 ohm 5% $\frac{1}{4}$w | 1 | R204 |
| 128533-104 | FS | Res 100K ohm 5% $\frac{1}{4}$w | 2 | R308, 205 |
| 128533-101 | FS | Res 100 ohm 5% $\frac{1}{4}$w | 5 | R206, 408, 410, 501, 503 |
| 128533-154 | FS | Res 150K ohm 5% $\frac{1}{4}$w | 2 | R301, 303 |
| 901036 | | Res 100K ohm 20% 1w VAR | 2 | R302, 304 |
| 903050 | | Res 330K ohm 5% $\frac{1}{4}$w carb straight | 1 | R305 |
| 901037 | | Res 200K ohm 20% 1w VAR | 1 | R306 |
| 128533-393 | FS | Res 39K ohm 5% $\frac{1}{4}$w | 1 | R307 |
| 903044 | | Res 3.3 ohm 5% $\frac{1}{4}$w | 1 | R309 |
| 903033 | | Res 56K ohm 5% $\frac{1}{4}$w | 2 | R310, 311 |
| 903051 | | Res 470K ohm 5% $\frac{1}{4}$w carb straight | 1 | R312 |
| 128533-683 | FS | Res 68K ohm 5% $\frac{1}{4}$w | 1 | R313 |
| 903052 | | Res 2.2 ohm 5% $\frac{1}{4}$w | 1 | R314 |
| 903053 | | Res 1 ohm 5% $\frac{1}{4}$w | 1 | R411 |
| 903559 | | Res 82 ohm 5% $\frac{1}{2}$w | 1 | R412 |
| 903613 | | Res 0.5 ohm 5% 1w metal oxide | 1 | R413 |
| 128533-333 | FS | Res 33K ohm 5% $\frac{1}{4}$w | 1 | R502 |
| 901038 | | Res 5M ohm 20% 5w VAR | 1 | R508 |
| 128533-224 | FS | Res 220K ohm 5% $\frac{1}{4}$w | 1 | R509 |
| 901035 | | Res 100K ohm 20% 2w VAR | 1 | R510 |
| 128533-473 | FS | Res 47K ohm 5% $\frac{1}{4}$w | 1 | R511 |
| 129472-390 | | Res 39 ohm 5% 1w metal oxide | 1 | R504 |
| 128533-472 | FS | Res 4.7K ohm 5% $\frac{1}{4}$w | 2 | R505, 507 |
| 128533-102 | FS | Res 1K ohm 5% $\frac{1}{4}$w | 1 | R506 |

LEAR SIEGLER, INC.
DATA PRODUCTS DIVISION
901 EAST BALL ROAD, ANAHEIM, CALIFORNIA 92805
PHONE: (714) 778-3500 TELEX: 65-5444 TWX: 910-591-1157