WANG

5105

OFFICE INFORMATION SYSTEMS

Models:
OIS-105
OIS-115
OIS-125A
OIS-130A-E

Customer Engineering
Product Maintenance Manual

729-0886-A

PREFACE

This document is the standard Product Maintenance Manual (PPM) for the Wang Office Information Systems 105/115, 125A, and 130A-E. It's purpose is to provide the Wang Customer Engineer (CE) with instructions to unpack, install, operate and maintain these systems.

Second Edition (April, 1983)

This publication is a major revision of and obsoletes publication numbers 729-0886 and 729-0885. It also incorporates Product Service Notices 729-0985-A and 729-1109. Use of the material in this publication is only for the purposes stated in the Preface. Updates or changes made to the information in this publication will be published as Product Service Notices (PSNs) or subsequent editions.

This document is the property of Wang Laboratories, Inc. All information contained herein is considered company proprietary information, and its use is restricted solely to the purpose of asssisting the Customer Engineer in servicing Wang products. Reproduction of all or any part of this document without the prior consent of Wang Laboratories, Inc. is prohibited.

© Copyright WANG Labs., Inc. 1981, 1982, 1983

TABLE OF CONTENTS

		PAGE
LIST OF TABLES		v
LIST OF ILLUSTRATIONS		vi
CHAPTER 1	INTRODUCTION	
1.1	SCOPE AND PURPOSE	1-1
1.2	ORGANIZATION	1-2
1.3	RELATED DOCUMENTATION	1-3
1.4	GENERAL SYSTEM DESCRIPTION	1-4
1.5	SYSTEM CONFIGURATIONS	1-5
1.5.1	The OIS 105 Systems	1-5
1.5.2	The OIS 115 systems	1-6
1.5.3	The OIS 125A and 130A-E systems	1-7
1.6	GENERAL LAYOUT OF MASTER PROCESSOR	1-9
1.7	REAR PANEL OF MASTER PROCESSOR	1-13
1.8	MASTER PROCESSOR SPECIFICATIONS	1-15
1.8.1	Specifications for Shugart SA901 Diskette Drive	1-16
1.8.2	Specifications for the Winchester Drives	1-16
1.9	SPECIFICATIONS FOR THE HAWK DISK DRIVE	1-17
1.10	ENVIRONMENTAL SPECIFICATIONS	1-17
1.11	OPTIONAL PERIPHERALS	1-18
CHAPTER 2	THEORY OF OPERATION	
2.1	GENERAL	2-1
2.2	THE CPU/MEMORY BOARD	2-1
2.3	MEMORY-MAPPED I/O DEVICE ADDRESSES	2-3
2.4	MASTER UNIT DATA FLOW	2-4
2.5	AUTOMATIC STATUS OPERATION (ASOP)	2-5
2.6	THE CHANNEL SERIAL DATA LINK	2-6
2.7	THE DISK DRIVE CONTROLLERS	2-7
CHAPTER 3	OPERATIONS	
3.1	INTRODUCTION	3-1
3.2	MASTER-PROCESSOR CONTROLS AND INDICATORS	3-2
3.2.1	Master Processor Front Panel	3-2
3.2.2	Master Processor Internal Controls and Indicators	3-4
3.2.2.1	7501-D CPU/MEMORY Board	3-4
3.2.2.2	7502 - 10 MEG/FLOPPY CONTROLLER Board	3-6
3.2.2.3	Voltage-Selector Switch	3-7
3.2.2.4	7653 WINCHESTER "B" CONTROLLER Board	3-8
3.2.2.5	Winchester Disk Drive Unit	3-9
3.3	HAWK DISK UNIT CONTROLS AND INDICATORS	3-10
3.4	CRT WORKSTATION CONTROLS AND INDICATORS	3-11
CHAPTER 4	INSTALLATION	
4.1	INTRODUCTION	4-1
4.2	CHECKLIST FOR SITE PREPARATION	4-2
4.3	TOOLS AND EQUIPMENT	4-4
4.3.1	Recommended Test Equipment / Tool List	4-4
4.3.2	Software Tools	4-4

TABLE OF CONTENTS (continued)

		PAGE
4.4	UNPACKING & INITIAL INSPECTION	4-5
4.4.1	Unpacking the Master Processor	4-5
4.4.2	Unpacking the Hawk Disk Drive	4-6
4.4.3	Unpacking the CRT Workstation	4-7
4.4.4	Inspecting the Master Processor	4-8
4.4.5	Inspecting the Hawk Disk Drive	4-9
4.4.6	Inspecting the CRT Workstation	4-10
4.5	SYSTEM INTERCONNECTIONS	4-10
4.5.1	Cable Connections	4-10
4.5.2	Electrical Connections	4-11
4.6	INITIAL SETUP, CHECKS, AND ADJUSTMENTS	4-12
4.6.1	Initial Checks and Adjustments for the Master Processor	4-12
4.6.2	Initial Checks and Adjustments for the Hawk Disk Drive	4-13
4.6.3	Initial Checks and Adjustments for the CRT Workstation	4-13
4.7	POWER-UP PROCEDURE	4-15
4.8	MASTER UNIT POWER-UP DIAGNOSTIC	4-16
4.9	POWER-DOWN PROCEDURE	4-16
4.10	SYSTEM CHECKOUT	4-17
4.11	FINAL WORD PROCESSING CHECK	4-18
4.12	DETAILED PROCEDURES	4-19
4.12.1	Inspecting the Master Processor	4-19
4.12.1.1	Removing the Top Cover	4-19
4.12.1.2	Removing the Diskette Drive Unit	4-20
4.12.1.3	Tightening Wiring Connections	4-21
4.12.1.4	Positioning the Voltage-Selector Switch	4-22
4.12.1.5	Seating PCAs and Connectors	4-23
4.12.1.6	Connecting the I/O Channels to the Data-Buffer Board	4-24
4.12.1.7	Replacing the Diskette-Drive Unit	4-25
4.12.1.8	Removing the Winchester Drive Unit	4-26
4.12.1.9	Winchester Drive Shipping Locks	4-27
4.12.1.10	Replacing the Winchester Drive Unit	4-29
4.12.1.11	Mailing the Shipping Card and Reporting Damage	4-30
4.12.2	Cabling	4-31
4.12.2.1	Inspecting the Hawk Ribbon Cables	4-31
4.12.2.2	Installing Master-Processor Cable Clamp	4-32
4.12.2.3	Connecting the Ribbon Cable to the Master Processor	4-33
4.12.2.4	Grounding the Ribbon Cable at the Hawk Disk Unit	4-34
4.12.2.5	Connecting the Ribbon Cable to the Hawk Disk Unit	4-35
4.12.2.6	Setting the Winchester I/O-Board Switches (Hawk disk unit)	4-36
4.12.2.7	Connecting the CRT Workstation to the Master Processor	4-37
4.12.3	Initial Checks and Adjustments for the Master Processor	4-38
4.12.3.1	Checking the Board E-Revision Levels	4-38
4.12.3.2	Setting the Switches	4-39
4.12.3.3	Adjusting Voltages on the CPU/MEM Board	4-41
4.12.3.4	Testing the Diagnostic LEDs	4-42
4.12.3.5	Aligning the Diskette Drive Unit	4-43
4.12.3.6	Replacing the Top Cover	4-44

CHAPTER 5 PREVENTIVE AND CORRECTIVE MAINTENANCE

5.1	GENERAL	5-1
5.2	PREVENTIVE MAINTENANCE	5-1
5.2.1	Materials Required	5-1

TABLE OF CONTENTS (continued)

		PAGE
5.2.2	PM Schedules for the Master Processor	5-2
5.2.3	Detailed Procedures	5-2
5.2.3.1	Equipment Operational Check	5-2
5.2.3.2	Cleaning	5-2
5.2.3.3	Inspection	5-3
5.2.3.4	Alignments/Adjustments	5-4
5.3	CORRECTIVE MAINTAINENCE	5-5
5.3.1	Table of Field-Replaceable Items	5-5
5.3.2	Remove/Replace Procedures for the Master Processor	5-6
5.3.2.1	Removing/Replacing the Top Cover	5-6
5.3.2.2	Removing the Floppy Diskette Drive	5-7
5.3.2.3	Replacing the Floppy Diskette Drive	5-8
5.3.2.4	Removing/Replacing the Diskette-Drive Baseplate	5-9
5.3.2.5	Removing/Replacing the Diskette-Drive Headpad	5-10
5.3.2.6	Removing/Replacing the Floppy Diskette Cable	5-11
5.3.2.7	Upgrading the Diskette Drive Door Lock	5-12
5.3.2.8	Upgrading the Diskette Drive PCA	5-13
5.3.2.9	Removing the PCAs	5-14
5.3.2.10	Replacing the PCAs	5-15
5.3.2.11	Removing/Replacing the Regulator PCA	5-16
5.3.2.12	Removing the Transformer Assembly	5-17
5.3.2.13	Replacing the Transformer Assembly	5-18
5.3.2.14	Removing/Replacing the Front Panel	5-19
5.3.2.15	Removing the Motherboard	5-20
5.3.2.16	Replacing the Motherboard	5-21
5.3.2.17	Removing/Replacing the Power Box Assembly	5-22
5.3.2.18	Removing/Replacing the Serial Connector Plate Assembly	5-23
5.3.2.19	Removing/Replacing the Fan	5-24
5.3.2.20	Removing/Replacing the Hawk Ribbon Cables	5-25
5.3.2.21	Winchester Disk Drive Removal/Replacement	5-26
5.3.2.22	Shugart Winchester Drive Shipping Locks	5-28
5.3.2.23	Quantum Winchester Drive Shipping Locks	5-30
5.3.3	Adjustments/Alignments for the Master Processor	5-31
5.3.3.1	Adjusting the PCA Racks	5-31
5.3.3.2	Adjusting the Voltage Levels	5-32
5.3.3.3	Aligning the Diskette Drive Unit	5-33

LIST OF TABLES

		PAGE
TABLE 3-1	OIS 105/115/125A/130A-E CONTROLS AND INDICATORS	3-1
TABLE 3-2	MASTER PROCESSOR FRONT-PANEL CONTROLS AND INDICATORS	3-3
TABLE 3-3	MASTER PROCESSOR INTERNAL CONTROLS AND INDICATORS	3-5
TABLE 3-4	CONTROLS AND INDICATORS FOR THE HAWK DISK UNIT	3-10
TABLE 3-5	WORKSTATION CONTROLS AND INDICATORS	3-11
TABLE 4-1	SITE PREPARATION CHECKLIST	4-2
TABLE 4-2	ELECTRICAL AND ENVIRONMENTAL REQUIREMENTS	4-3
TABLE 4-3	E-REVISION LEVELS	4-38
TABLE 4-4	DC VOLTAGE ADJUSTMENTS	4-41
TABLE 5-1	FIELD-REPLACEABLE ITEMS	5-5
TABLE 5-2	DC VOLTAGE ADJUSTMENTS	5-32

LIST OF ILLUSTRATIONS

		PAGE
Figure 1-1.	Minimum Configuration for OIS systems 105, 105-1	1-5
Figure 1-2.	Minimum Configuration for OIS systems 115-1,-2,-3,-4	1-6
Figure 1-3.	Minimum Configuration for OIS 125A and 130A-E systems	1-8
Figure 1-4.	Master Processor Layout for OIS Systems 105, 105-1,	1-10
Figure 1-5.	Master Processor Layout for OIS Systems 130B, 130C,	1-11
Figure 1-6.	Master Processor Layout for OIS Systems 125A, 130A	1-12
Figure 1-7.	Master Processor Rear Panel for OIS Systems 105, 105-1	1-13
Figure 1-8.	Master Processor Rear Panel for OIS Systems 125A, 130A,	1-14
Figure 2-1.	OIS 105/115/125A/130A-E System Simplified Block Diagram	2-2
Figure 3-1.	Master Processor Front-Panel Controls and Indicators	3-2
Figure 3-2.	Master Processor Internal Controls and Indicators	3-4
Figure 3-3.	Master Processor Internal Controls and Indicators	3-6
Figure 3-4.	Location of Voltage-Selector Switch	3-7
Figure 3-5.	7653 WINCHESTER "B" CONTROLLER Switch Configurations	3-8
Figure 3-6.	Winchester Drive Option Jumper Placement	3-9
Figure 3-7.	Hawk Disk Unit Controls and Indicators	3-10
Figure 3-8.	CRT Workstation Controls and Indicators	3-11
Figure 4-1.	Packaging for the Master Processor	4-5
Figure 4-2.	Packaging for the Hawk Disk Unit	4-6
Figure 4-3.	Packaging for the CRT Workstation	4-7
Figure 4-4.	Inspection items for the Master Processor	4-8
Figure 4-5.	Inspecting the Hawk Disk Unit	4-9
Figure 4-6.	Initial Checks and Adjustments for the Master Processor	4-12
Figure 4-7.	CRT Workstation Checks and Adjustments	4-14
Figure 4-8.	Controls for Power-up	4-15
Figure 4-9.	Master Unit Front Control Panel	4-16
Figure 4-10.	Top-Cover Removal	4-19
Figure 4-11.	Diskette Drive Unit Removal	4-20
Figure 4-12.	Wiring Connections	4-21
Figure 4-13.	Voltage-Selector Switch	4-22
Figure 4-14.	PCAs and Connectors	4-23
Figure 4-15.	Data-Buffer Board Connections	4-24
Figure 4-16.	Replacing the Diskette-Drive Unit	4-25
Figure 4-17.	Removing the Winchester Drive Unit	4-26
Figure 4-18.	Shugart Fixed Drive Spindle Lock	4-27
Figure 4-19.	Quantum Spindle Lock (left), Actuator lock (right)	4-28
Figure 4-20.	Replacing the Winchester Drive Unit	4-29
Figure 4-21.	Ribbon Cables	4-31
Figure 4-22.	Installing Master-Processor Cable Clamp	4-32
Figure 4-23.	Ribbon-Cable Connections	4-33
Figure 4-24.	Grounding the Ribbon Cable	4-34
Figure 4-25.	Connecting the Hawk Disk Unit	4-35
Figure 4-26.	Winchester I/O-Board Switches (Hawk disk unit)	4-36
Figure 4-27.	Connecting the CRT Workstation	4-37
Figure 4-28.	E-Revision Levels	4-38
Figure 4-29.	CPU/MEM Board Switch Configurations	4-39
Figure 4-30.	Switch Configurations for Winchester "B" Controller Board	4-40
Figure 4-31.	Voltage Adjustments	4-41
Figure 4-32.	Testing the Diagnostic LEDs	4-42
Figure 4-33.	Top-Cover Replacement	4-44
Figure 5-1.	Checking/Replacing the Diskette Drive Head Pad	5-4
Figure 5-2.	Top-Cover Removal	5-6
Figure 5-3.	Removing the Diskette-Drive Unit	5-7

LIST OF ILLUSTRATIONS (continued)

		PAGE
Figure 5-4.	Replacing the Diskette-Drive Unit	5-8
Figure 5-5.	Removing/Replacing the Diskette-Drive Baseplate	5-9
Figure 5-6.	Removing/Replacing the Diskette-Drive Headpad	5-10
Figure 5-7.	Removing/Replacing the Floppy Diskette Cable	5-11
Figure 5-8.	Diskette Drive Door Lock Assembly	5-12
Figure 5-9.	928 Door Lock PCA Upgrade	5-13
Figure 5-10.	Removing the PCAs	5-14
Figure 5-11.	Replacing the PCAs	5-15
Figure 5-12.	Removing/Replacing the Regulator PCA	5-16
Figure 5-13.	Removing the Transformer Assembly	5-17
Figure 5-14.	Replacing the Transformer Assembly	5-18
Figure 5-15.	Removing/Replacing the Front Panel	5-19
Figure 5-16.	Removing the Motherboard Assembly	5-20
Figure 5-17.	Replacing the Motherboard Assembly	5-21
Figure 5-18.	Removing/Replacing the Power Box Assembly	5-22
Figure 5-19.	Removing/Replacing the Serial Connector Plate Assembly	5-23
Figure 5-20.	Removing/Replacing the Fan	5-24
Figure 5-21.	Removing/Replacing the Hawk Ribbon Cables	5-25
Figure 5-22.	Winchester Disk Drive Removal	5-27
Figure 5-23.	Shugart Shipping Lock Removal	5-29
Figure 5-24.	Quantum Spindle Lock (left) and Actuator lock (right)	5-30
Figure 5-25.	Adjusting the PCA Racks	5-31
Figure 5-26.	Adjusting the Voltage Levels	5-32

CHAPTER 1 INTRO-DUCTION

CHAPTER 1

INTRODUCTION

1.1 SCOPE AND PURPOSE

This Product Maintenance Manual concerns the 105/115/125A/130A-E line of Office Information Systems (OIS) and provides field personnel with the information necessary to:

A. Understand the functions of the principal parts of the system and all the relationships and interactions among these parts

B. Unpack and install the system

C. Perform preventive maintenance

D. Perform diagnostic tests

E. Analyze failure indications

F. Replace failed assemblies

A block level description of the logic internal to the Master Unit is presented in Chapter 2, "Theory of Operation". This document also serves as a reference to those publications necessary for the installation and maintenance of optional peripherals and accessories.

This manual is written for Customer Engineering personnel. Familiarity with WANG Word Processing, OIS-140/145 and the Hawk and Winchester disk units is essential for effective use of this manual.

1.2 ORGANIZATION

This manual describes the following set of OIS systems:

OIS 105, 105/1
OIS 115/1, 115/2, 115/3, 115/4
OIS 125A
OIS 130A, 130B, 130C, 130D, 130E

While the majority of characteristics described in this manual are common to the entire group of OIS systems listed above, there are some characteristics unique to certain subsets of the group. Chapter 1, INTRODUCTION, describes the similarities and differences among systems. The CE is expected to use this chapter to familiarize him/herself with the characteristics and components unique to his/her particular system and is also expected to retain that knowledge when consulting the remaining chapters. For this reason, the remaining chapters address the totality of components and characteristics as if they all pertained to a single system. It is left up to the CE to determine which sections apply to his/her particular system, based on the differentiation provided in Chapter 1. However, in cases where one system possesses unique characteristics, explicit reference to that system will be made.

Thoughout the manual, references to a certain group of systems will be made by indicating that group's generic name. For instance, when speaking of the OIS 115-1, 115-2, 115-3, and 115-4 systems, the writer will simply make reference to 'the OIS 115 systems'.

In accordance with the stated scope and purpose, this manual is arranged into 8 chapters:

CHAPTER 1	INTRODUCTION
CHAPTER 2	THEORY OF OPERATION
CHAPTER 3	OPERATIONS
CHAPTER 4	INSTALLATION
CHAPTER 5	PREVENTIVE AND CORRECTIVE MAINTENANCE
CHAPTER 6	SCHEMATICS
CHAPTER 7	ILLUSTRATED PARTS BREAKDOWN
CHAPTER 8	TROUBLESHOOTING

This manual is further organized and arranged so that all information pertaining to a task or subject is complete on a single page. Obviously, more than one page is required for complicated and difficult subjects. In these instances, all the information written at the "level of the page" is presented on that page; references are given for further details. The referenced material is also organized in the same fashion.

That is to say: when the CE has completed a page, s/he has completed the task described on that page; there is no more to be done. If the CE is not familiar with, or needs reminding about, some item on that page s/he is referenced to a page which details that item (the details also being complete on one page). This arrangement allows the experienced CE to quickly run through all the steps in a task without being slowed by details with which s/he is already familiar. At the same time, all the details needed by a less experienced CE are also available.

1.3 RELATED DOCUMENTATION

MISCELLANEOUS

Systems Installation Guide for VS, 2200, WP/OIS Systems	(729-0907)
Site Preparation Guide	(700-5978)
OIS Supervisor Procedures Manual	(700-5562C)
OIS Supervisor Quick Reference Guide	(700-5741C)
OIS 140/145 Product Maintenance Manual	(729-0664A)

CRT WORKSTATION (Models 5536-2,-3,-4)

Model 5536 Series Workstation PMM	(729-0522A)

HAWK CDC DISK DRIVE (Model 6560)

CDC 9427H Field Maintenance Manual (HAWK)	(729-0884)
Wang/CDC 9427H Disk Drive Manual (HAWK)	(729-0181)

SHUGART FLOPPY DISKETTE DRIVE (Model SA901)

Shugart SA901 Maintenance Information, SB No. 46.3/3a	(729-0116)
SA901 Head Alignment, WPNL No. 21	(729-0113)
SA901 Head Load Pads, WPNL No. 64	(729-0114)

SHUGART WINCHESTER DISK DRIVES (models SA1002, SA1004)

Shugart SA1000 OEM Manual	(729-0898)
SA1000 Damper Replacement, PSN-2	(729-0992)
SA1000 Options/Jumpers, PSN-3	(729-1049)

QUANTUM WINCHESTER DISK DRIVES (models Q2020, Q2040)

Quantum Q2000 Disk Drive OEM Reprint	(729-1060)

OPTIONAL PERIPHERALS

Product Maintenance Manual: Wang Daisy Printers	(729-0372A)
Archiving Workstation - Service Information, WPNL #77	(729-0521)
Mag-Card Reader for WPS, WPNL #78	(729-0545)
Model 61/62 Matrix Printer Maintenance Manual	(729-0339)
Model 44, 48 Phototypesetter	(729-0465)
Image Printer Maintenance Manual	(729-0447)
Model 5538 Twin Sheet Feeder Installation & Adjustment Manual	(729-0549)
Envelope Feeder (EF) Product Maintenance Manual	(729-0873)
WISE Model 6550-1 PMM	(729-0906)
TCB-1 TC Controller Self Study Workbook	(729-1057)
TCB-1 Product Maintenance Manual	(729-0887)

1.4 GENERAL SYSTEM DESCRIPTION

The OIS 105/115/125A/130A-E systems are part of the continuing series of versatile text processors in Wang Laboratories' Office Information Systems (OIS) family. Master processing and data-storage equipment form the core of these OIS systems; User devices are clustered around this core. Extensive options provide system configurations that are versatile and expandable.

These systems are designed for the user with moderate data handling requirements The master processor is a desk top unit. Off-line data storage is provided by a Shugart SA901 floppy diskette drive while on-line storage is present in the form of a Winchester disk drive and/or Hawk hard disk unit. The different combinations and various storage capacities account for the differences between models. Section 1.5 describes these diferences.

These systems use standard OIS system architecture and software. User devices (workstations, printers, typesetters, etc.), software packages, and operating procedures are identical throughout. Standard software features include Sort, System Security, and the Mathematics Support Packages.

A Wang OIS system is a multi-microprocessor based data processing system interconnected in such a way as to provide a general purpose, expandable configuration suitable for a variety of end user tasks. These systems may be thought of as Multiple processor distributed processing networks with one processor, the master, performing the network control function and file storage activities. The slave microprocessors provide the local user processing power, memory workspace, and usually support a single peripheral device. Slaves are not restrained to one type of peripheral by any hardware or software limitations.

The Processor Communications Channel provides the communications link between the master processor and the 1 to 16 slave processors (depending on model) that constitute a system. This communications channel carries both master/slave control information and blocked data at a 4.275 MHz serial bit rate for distances of up to 2000 feet. Blocked data can flow directly between a slave's memory and another selected peripheral without tying up the CPU's processing capabilities (DMA).

Key to the versatility and power of the OIS multiprocessor architecture is the operating system software which allows the master processor to execute tasks for each slave, control large capacity high-speed file storage devices, and provide network housekeeping functions necessary for the multitask environment of these systems. The operating system controls Initial Program Loading (IPL) of all slave processors. Once each slave is running, the operator at each station may request the master CPU to load the slave processor with one of many software packages such as Word Processing, BASIC, etc.

1.5 SYSTEM CONFIGURATIONS

The minimum configuration addressed in this manual comprises the Master Processor, and a 5536-series workstation (required to initialize, configure, and checkout the system). Minimum configuration for the OIS 125A and 130A-E lines also include a HAWK disk unit. ALL OIS systems contain a Shugart SA901 Floppy Diskette drive housed in the Master Processor. Most also include a Shugart or Quantum Winchester disk drive similarly housed in the Master Processor.

1.5.1 The OIS 105 Systems

Figure 1-1 below depicts the minimum configuration for the OIS 105 and OIS 105-1 systems. They are comprised of the following:

MODEL	NO. OF PORTS	DISK DRIVES	CAPACITY (MB)**
OIS 105	3(4) *	Shugart SA1002 Winchester Shugart SA901 Floppy	3.0 / 3.8
OIS 105-1	3(4) *	Shugart SA1002 Winchester Shugart SA901 Floppy	4.2 / 5.3

* The 105 systems are limited to two workstations and one printer. An optional fourth port is available for either TC, or WISE.

** 'formatted' / 'unformatted'

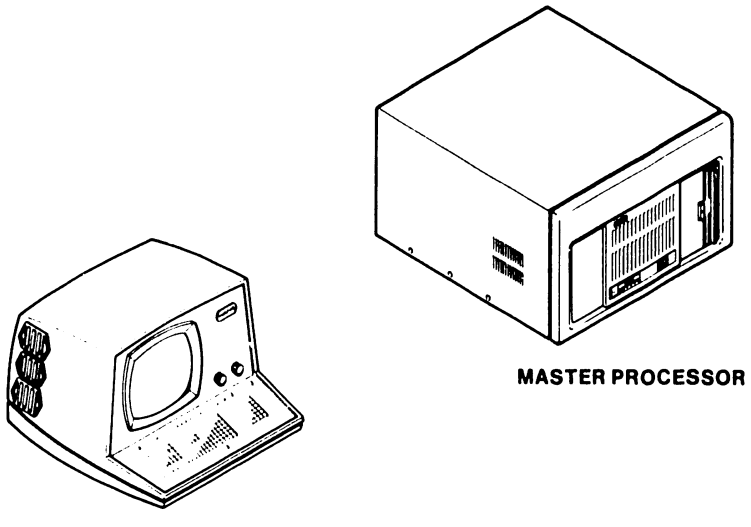

Figure 1-1. Minimum Configuration for OIS systems 105, 105-1

1.5.2 The OIS 115 systems

Figure 1-2 below depicts the minimum configuration for the OIS 115-1, -2, -3, and -4 systems. They are comprised of the following:

MODEL	NO. OF PORTS	DISK DRIVES	CAPACITY (MB)**
OIS 115-1	8	Shugart SA1002 Winchester Shugart SA901 Floppy	4.2 / 5.3
OIS 115-2	8	Shugart SA1004 Winchester Shugart SA901 Floppy	8.4 / 10.7
OIS 115-3	8	Quantum Q2020 Winchester Shugart SA901 Floppy	16.8 / 21.3
OIS 115-4	8	Quantum Q2040 Winchester Shugart SA901 Floppy	33.6 /42.7

** 'formatted' / 'unformatted'

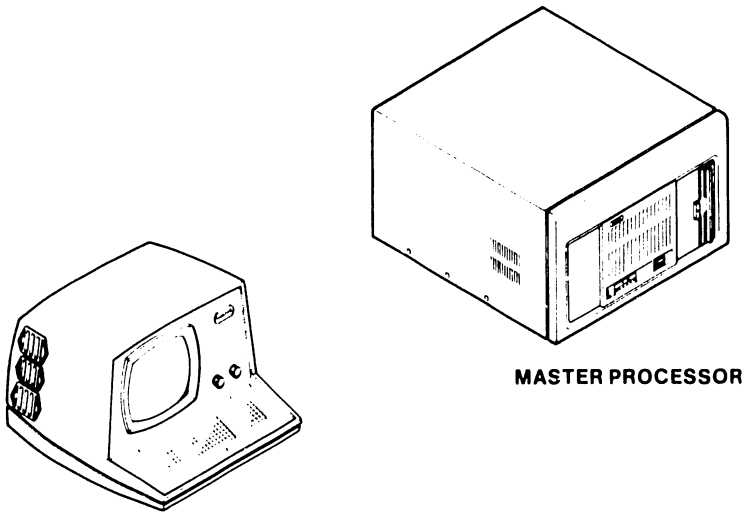

Figure 1-2. Minimum Configuration for OIS systems 115-1,-2,-3,-4

1.5.3 The OIS 125A and 130A-E systems

Figure 1-3 below depicts the minimum configuration for the OIS 125A, 130A 130B, 130C, 130D, and 130E systems. They are comprised of the following:

MODEL	NO. OF PORTS	DISK DRIVES	CAPACITY (MB)**
OIS 125A	16	CDC Hawk disk drive Shugart SA901 Floppy	5.0 / 6.4
OIS 130A	16	CDC Hawk disk drive Shugart SA901 Floppy	5.0 / 6.4
OIS 130B	16	Shugart SA1002 Winchester CDC Hawk disk drive Shugart SA901 Floppy	4.2 / 5.3 10.0 / 12.8
OIS 130C	16	Shugart SA1004 Winchester CDC Hawk disk drive Shugart SA901 Floppy	8.4 / 10.7 10.0 / 12.8
OIS 130D	16	Quantum Q2020 Winchester CDC Hawk disk drive Shugart SA901 Floppy	16.8 / 21.3 10.0 / 12.8
OIS 130E	16	Quantum Q2040 Winchester CDC Hawk disk drive Shugart SA901 Floppy	33.6 / 42.7 10.0 / 12.8

** 'formatted' / 'unformatted'

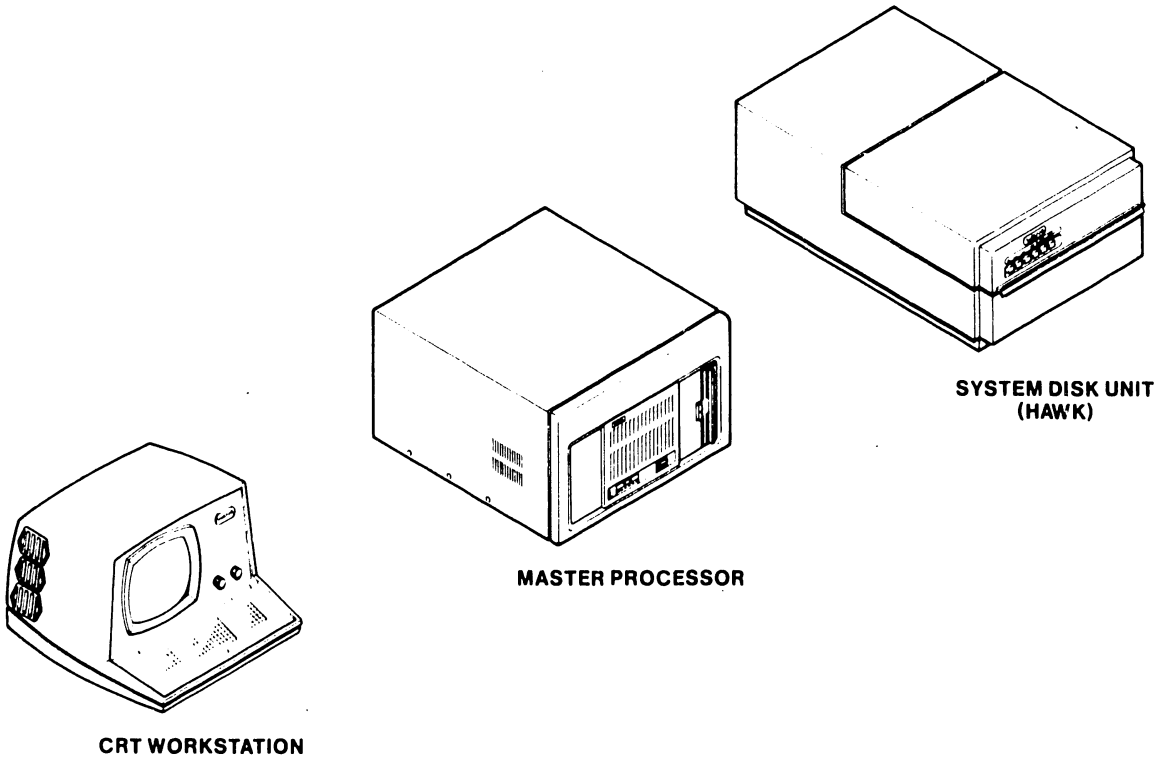

Figure 1-3. Minimum Configuration for OIS 125A and 130A-E systems

1.6 GENERAL LAYOUT OF MASTER PROCESSOR

All of the OIS system Masters addressed in this manual (with the exception of OIS 125A and 130A systems) contain seven Printed Circuit Assemblies (PCAs), a motherboard, power supply assembly, floppy diskette drive, and fixed Winchester disk drive. The 125A and 130A systems differ from the rest in that their Masters do not contain a fixed Winchester drive or Winchester controller logic. Therefore, the 125A and 130A systems have only five PCAs instead of seven. All the OIS systems addressed in this manual have a 210-7649 Motherboard assembly and the following PCAs in common:

7501-D	CPU/MEMORY BOARD
7502	10 MEG/FLOPPY CONTROLLER
7503	DATA LINK CONTROLLER
7504	DATA BUFFER
7887	POWER SUPPLY REGULATOR

The systems with fixed Winchester drives (i.e. all except 125A and 130A) have an additional two PCAs which contain Winchester controller logic. These two boards are:

7950	WINCHESTER "A" CONTROLLER
7653-A	WINCHESTER "B" CONTROLLER

---NOTE---

Some OIS systems containing Shugart fixed Winchester drives employ the 7650 PCA as WINCHESTER "A" CONTROLLER. These boards function only for Shugart drives. In more recent systems the 7950 has replaced the 7650 and is capable of controlling either Shugart or Quantum fixed drives.

Figures 1-4 and 1-5 show the Master Processor layout for OIS systems containing Winchester drives. Figure 1-4 depicts the layout for OIS 105, 105-1, 115-1, 115-2, 115-3, and 115-4 systems, while Figure 1-5 depicts the same for OIS 130B, 130C, 130D, and 130E systems. The two groups differ only in the number of I/O ports and Winchester drive characteristics. The Winchester fixed disk drive is mounted to the left of the Front Panel Assembly. The floppy diskette drive is mounted to the right of the Front Panel Assembly. The Power Supply Assembly is mounted immmediately to the rear of the floppy diskette drive (i.e. in the right-rear corner).

The Front Panel Assembly provides the power switch, the DISK-SELECT switch, the RESET pushbutton, and diagnostic LEDs. This panel is changeable to incorporate the TC (Telecommunications) option.

The Master Processor layout for non-Winchester systems (OIS 125A, 130A) is depicted in Figure 1-6. It is essentially the same layout pictured in Figure 1-5 (the 130B through 130E systems) minus the Winchester drive and its two controller boards.

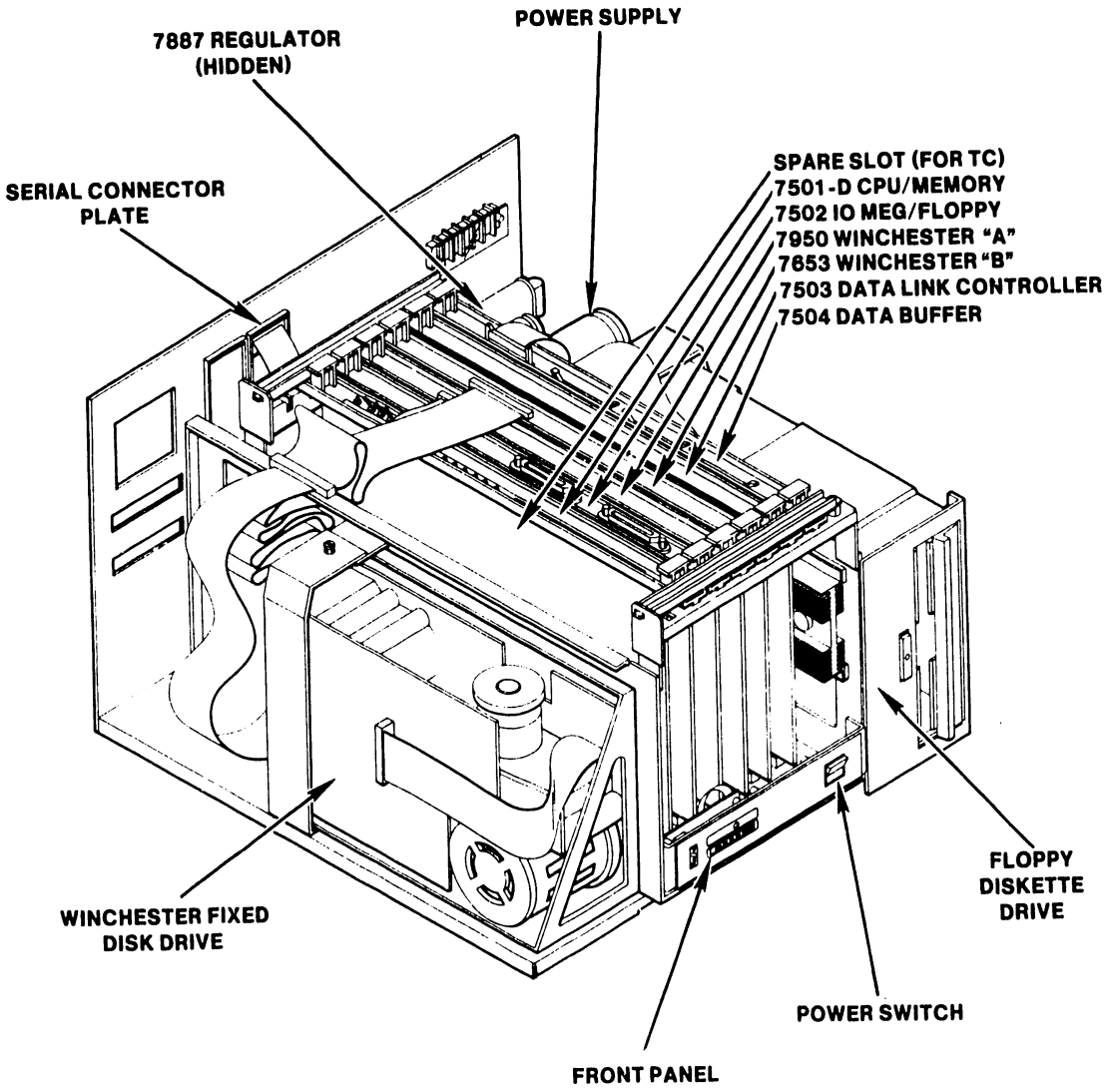

Figure 1-4. Master Processor Layout for OIS Systems 105, 105-1, 115-1, 115-2, 115-3, 115-4

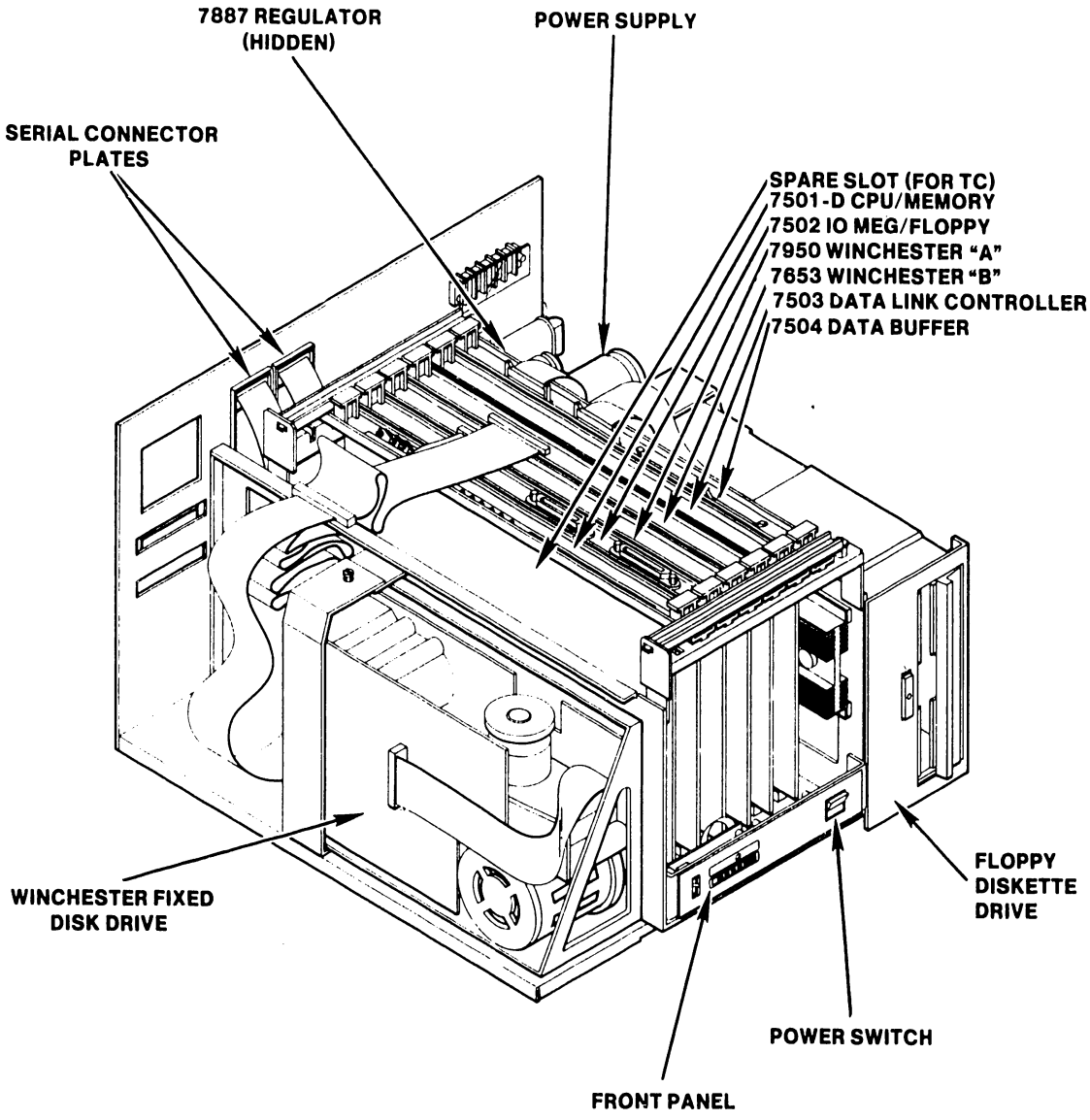

Figure 1-5. Master Processor Layout for OIS Systems 130B, 130C, 130D, and 130E

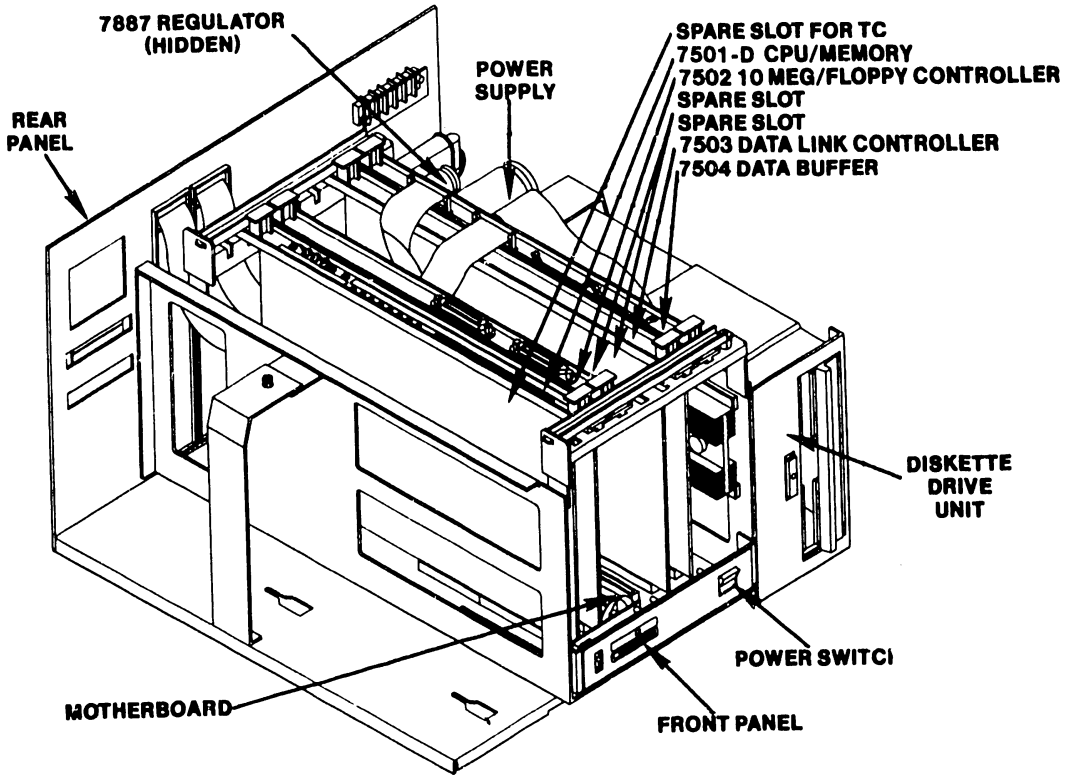

Figure 1-6. Master Processor Layout for OIS Systems 125A, 130A

1.7 REAR PANEL OF MASTER PROCESSOR

Figure 1-7 depicts the Master Processor rear panel for OIS 105, 105-1 systems. The same figure applies to OIS 115-1, 115-2, 115-3, and 115-4 systems with one exception: The 115 series contains a Serial Connector Plate having 8 rather than 3 pairs of BNC-TNC connectors. All connections are made at the rear of the unit. A grounded power cable, fuse holder, and power receptacle (8 Amperes maximum) are located at the lower-left corner. The fan and a blank panel for incorporation of the Telecommunications Option are also located on the rear panel.

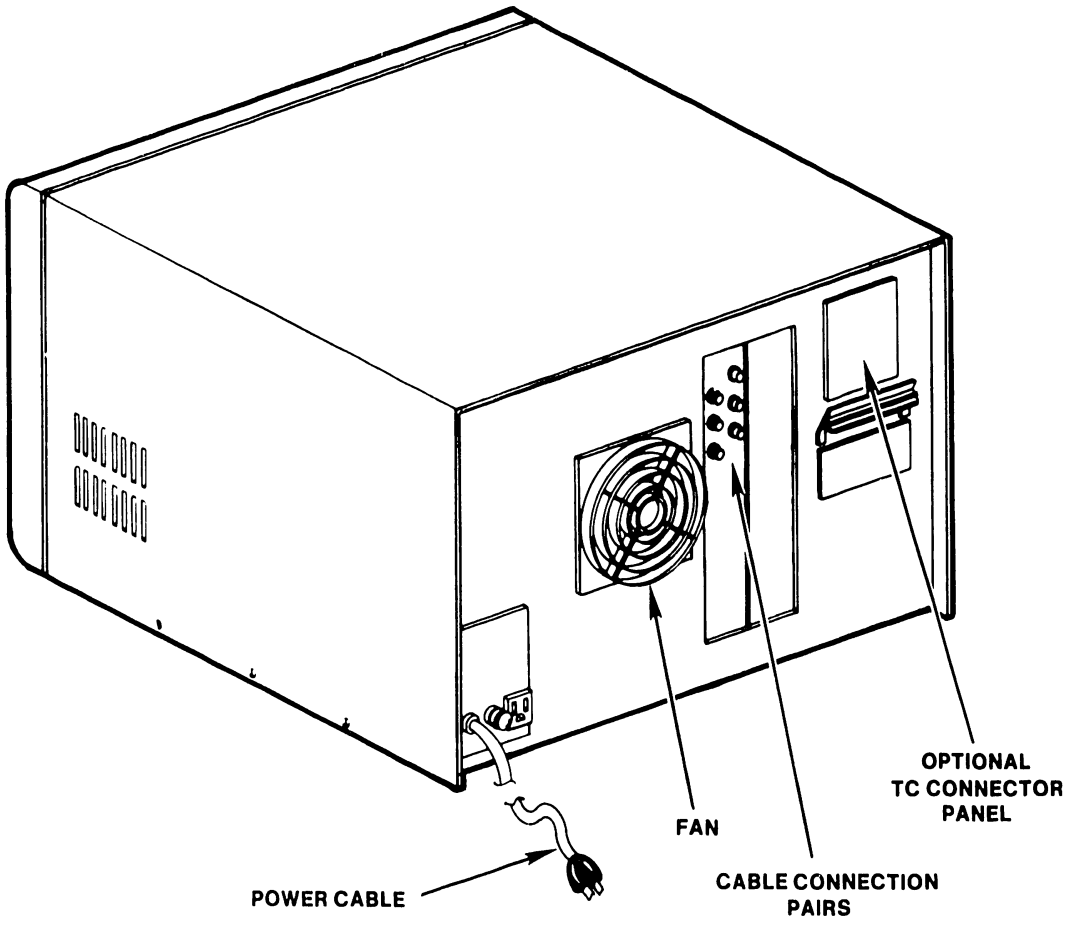

Figure 1-7. Master Processor Rear Panel for OIS Systems 105, 105-1

Figure 1-8 depicts the Master Processor rear panel for OIS 125A, 130A, 130B, 130C, 130D, and 130E systems. It differs from the preceding figure in that it contains two Serial Connector Plates, each containing 8 pairs of BNC-TNC connectors, and a ribbon cable for connection to a Hawk disk drive.

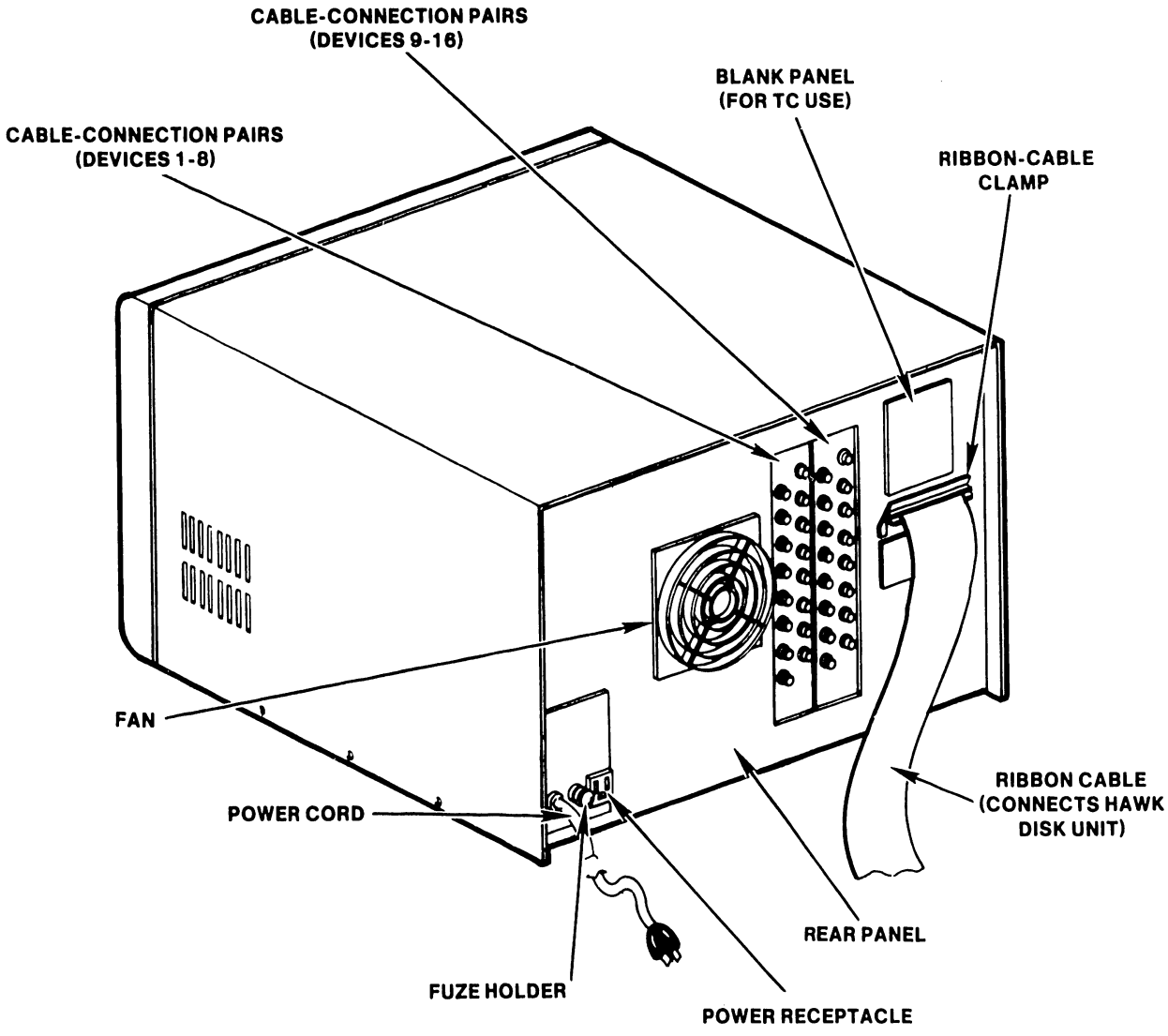

Figure 1-8. Master Processor Rear Panel for OIS Systems 125A, 130A, 130B, 130C, 130D, 130E

1.8 MASTER PROCESSOR SPECIFICATIONS

A Z80-based Master CPU is a standard hardware feature of the OIS systems described in this manual. Operating at 4 MHz, it operates at a faster transfer rate than previous processing systems. Included on the same board as the Master CPU is a programmable Counter Timer Circuit (CTC), 3K of PROM, 1K of address space devoted to Memory-Mapped I/O, and 60K of RAM. If the Extended Memory Option is purchased, an additional 3K of PROM and 60K of RAM is available to the customer for a total of 128K in all.

Following is a list of printed circuit boards used in the OIS 105/115/125A/130A-E Master Processor:

BOARD/CHASSIS #	NAME
210-7501-D	64K CPU/Memory Board
210-7502	Floppy/10 Meg Controller Board
210-7503	Data Link Controller Board
210-7504	Data Buffer Board
210-7950	Winchester "A" Controller Board
210-7653-A	Winchester "B" Controller Board
210-7649	Motherboard
210-7887	Regulator Board
210-7651	Front Panel PCB
212-3025	128K Extended Memory Option (Mother/daughterboard combination)

MASTER UNIT SPECIFICATIONS

Height	14.2 in.	(36.2 cm)
Width	21.2 in.	(53.0 cm)
Depth	23.0 in.	(58.4 cm)
Weight	70 lbs.	(31.5 kg)
	40 lbs.	(18.0 kg) **
Power Requirements	115 or 230 VAC ± 10%	
	60 or 50 Hz ± 10%	
	4.0 Amps @ 115 VAC	
	2.0 Amps @ 230 VAC	
Power consumption	460 Watts (max)	
Heat Output	1500 Btu/hr	(378 Kcal/hr)
Fuse Size	5A @ 115 VAC, Slo-Blo	
	3A @ 230 VAC, Slo-Blo	

** value applicable to OIS Systems 125A and 130A only.

1.8.1 Specifications for Shugart SA901 Diskette Drive

Height	12.75 Inches (32.4 cm)
Width	6.0 Inches (15.3 cm)
Depth	16.5 inches (42 cm)
Diskette Capacity	315,392 Characters
Rotational Speed	360 RPM
Rotational Period	166.72 msec
Average Access Time	424 msec
Average Latency	83 msec
Data Transfer Rate	31,250 Bytes/sec.
Bit Cell Time	4 usec
Track to Track Access Time	10 msec
Head Settling Time	10 msec
Sectors per Track	16
No. of Tracks	77
Total Sectors	1232
Sector Mark Duration	400 usec $\pm$ 200 usec
Index Mark Duration	400 usec $\pm$ 200 usec
Direction Select Pulse Duration	1 usec minimun
Time Between Head Load and Valid Data	50 msec
Time Between Head Load and step	30 msec

Refer to Service Bulletin 46.3/3a (729-0116) for additional information on the floppy diskette drive.

1.8.2 Specifications for the Winchester Drives

Four types of Winchester drives are used by the OIS systems addressed in this manual. The Shugart SA1002 is used in OIS 105, 105-1, 115-1, and 130B systems. The Shugart SA1004 is used in OIS 115-2 and 130C systems. The Quantum Q2020 is used in OIS 115-3 and 130D systems. The Quantum Q2040 is used in OIS 115-4 and 130E systems. Specifications for all four types follow:

	SA1002	SA1004	Q2020	Q2040
No. of Platters	1	2	2	4
No. of Surfaces	2	4	4	8
Total Formatted Capacity (MB)	4.2	8.4	16.8	33.6

	SHUGART SA1002, SA1004	QUANTUM Q2020, Q2040
Rotational Speed (nominal)	3125 RPM	3000 RPM
Rotational Period (nominal)	19.2 msec.	20 msec.
Average Rotational Latency (nominal)	9.6 msec.	10 msec.
Single Track Seek Time	19 msec.	15 msec.
Average Max. Seek Time	70 msec.	65 msec.
Maximum Seek Time	150 msec.	100 msec.
Head Switching Time	20 usec.	20 usec.
Data Transfer Rate (per 8 bit byte)	1.843 usec.	1.843 usec.
Tracks per surface	256	512

1.9 SPECIFICATIONS FOR THE HAWK DISK DRIVE

The Hawk Cartridge Disk Drive (Model 6560) is part of the Minimum Configuration for OIS Systems 125A, 130A, 130B, 130C, 130D, and 130E. Following are the electrical and physical characteristics of the HAWK Cartridge Disk Drive:

	Domestic	International
Height	10.3 Inches	(262 mm)
Width	18.9 Inches	(480 mm)
Depth	30.6 Inches	(778 mm)
Weight	150 lbs.	(68.2 kg)
Power Requirements	115VAC ± 10% 60Hz ± 1Hz 4.6A @ 120 VAC 310 Watts	(230VAC ± 10%) (50Hz ± 1 Hz) (2.5A @ 230 VAC)
Track Density	200 TPI	
Access Time	60 msec	
Average Access Time	35 msec ± 1 msec	
Spindle Speed	2400 RPM (± 48 RPM) at + 0.5 -1.0 Hz of input freq. and + 10%, -15% of input voltage.	
Avg. Latency Time	12.5 msec (@ 2400 RPM)	
Nominal Recording Bit Rate	2.5 MHz	
Data Capacity (formatted)	10 Mbytes	

Refer to the Wang/CDC HAWK Disk Drive Manual (729-0181) for additional details.

1.10 ENVIRONMENTAL SPECIFICATIONS

The operating environment is an important consideration when installing a processing system. Although OIS systems are designed to operate efficiently under less-than-ideal conditions, a dust-free, temperature-controlled environment is recommended.

Adhering to the following system environmental specifications will ensure that maximum operating efficiency is maintained:

1.	Relative Humidity	40% to 60% (non-condensing)
2.	Ambient Temperature	60°F (15°C) to 80°F (28°C)
3.	Temperature Gradient	12°F/Hr (6.7°C/Hr)
4.	Max. Wet Bulb Temp.	75°F (24.5°C)

1.11 OPTIONAL PERIPHERALS

The basic OIS system consists of a Master Unit, a workstation, and in some cases a Hawk disk drive. However, to communicate with the system, peripheral devices such as additional CRT/Workstations and printers are necessary items.

For OIS Systems 125A and 130A through E, a second Hawk disk unit (Model 6560) is available as an option. Other optional peripherals for the entire OIS line include:

- Archiving Workstation
- Mag Card Reader
- MAILWAY
- Multilingual Support Package
- Numeric Keypad
- Optical Character Reader
- Phototypesetter
- Telecommunications
- Twin Sheet Feeder
- WISE (Wang Inter-System Exchange)
- Envelope Feeder
- Bidirectional Forms Tractor
- 35-CPS Daisy Printer
- 35-CPS Wide Carriage Daisy Printer
- Twin-Headed Daisy Printer
- 120-CPS Matrix Printer
- 200-CPS Matrix Printer
- 425-LPM Line Printer
- Intelligent Image Printer

CHAPTER 2

THEORY OF OPERATIONS

CHAPTER 2

THEORY OF OPERATION

2.1 GENERAL

The Master CPU can be functionally divided into four components; the CPU/MEMORY board, TEN MEG/FLOPPY CONTROLLER, WINCHESTER CONTROLLER, and the CHANNEL SERIAL DATA LINK (CSDL). The WINCHESTER Control Logic resides on two boards, WINCHESTER CONTROLLER "A" (#1), and WINCHESTER CONTROLLER "B" (#2). Similarly, the CSDL Logic also consists of two boards - the DATA LINK CONTROL board and the DATA BUFFER board. Figure 2-1 presents a simplified block diagram of the OIS 105/115/125A/130A-E Master Unit.

2.2 THE CPU/MEMORY BOARD

The heart of the Master Unit is its 7501 CPU/MEMORY board, which includes a Z80A Microprocessor operating at 4 Megahertz. In addition to the Z80A and its associated timing and control logic, this board contains:

1. 3K of PROM
2. 1K of Memory-Mapped I/O allocations
3. a Counter/Timer Circuit (CTC)
4. parity generation and checking
5. a priority interrupt structure
6. 60K of RAM memory (expandable to 120K with Expanded Memory option).

The PROM portion of memory occupies the bottom 3K of addressable locations, 0000 to 0BFF Hex. The first 1K of PROM contains the "Bootstrap Loader" program while the remaining 2K contains the "Power-up Diagnostics". At power-up, the Bootstrap Loader gains program control briefly before passing it on to the Power-up Diagnostics. The diagnostics then test all basic system functions before allowing the system to proceed any further. If not satisfied with the state of the system , the Power-up Diagnostic program posts error codes on the Master Unit front panel indicators and the CPU/Memory board's diagnostic LEDs. The power-on light on the unit's front panel is set flashing and the system remains in this state until corrective measures are taken. When the Power-up Diagnostics program has determined the system to be operational, Z80A program control is passed back to the Bootstrap Loader program which then commences to Initial Program Load (IPL) the system.

The CPU/MEMORY board contains 64K bytes of Dynamic RAM memory, which must be continually refreshed in order to maintain its data. The Z80A provides a refresh pulse to serve this purpose. Because the PROM and Memory-Mapped I/O take up the lower 4K of memory addresses, only the upper 60K of RAM is addressable by the Z80A CPU. This 60K of RAM is referred to as "Master Memory". When the system is IPL'ed, the system operating software is loaded into Master Memory from the System Disk. The System Disk may reside in any one of three drives (floppy, Hawk, or Winchester); its location is revealed to the CPU via the three-position switch on the Master Unit's front panel.

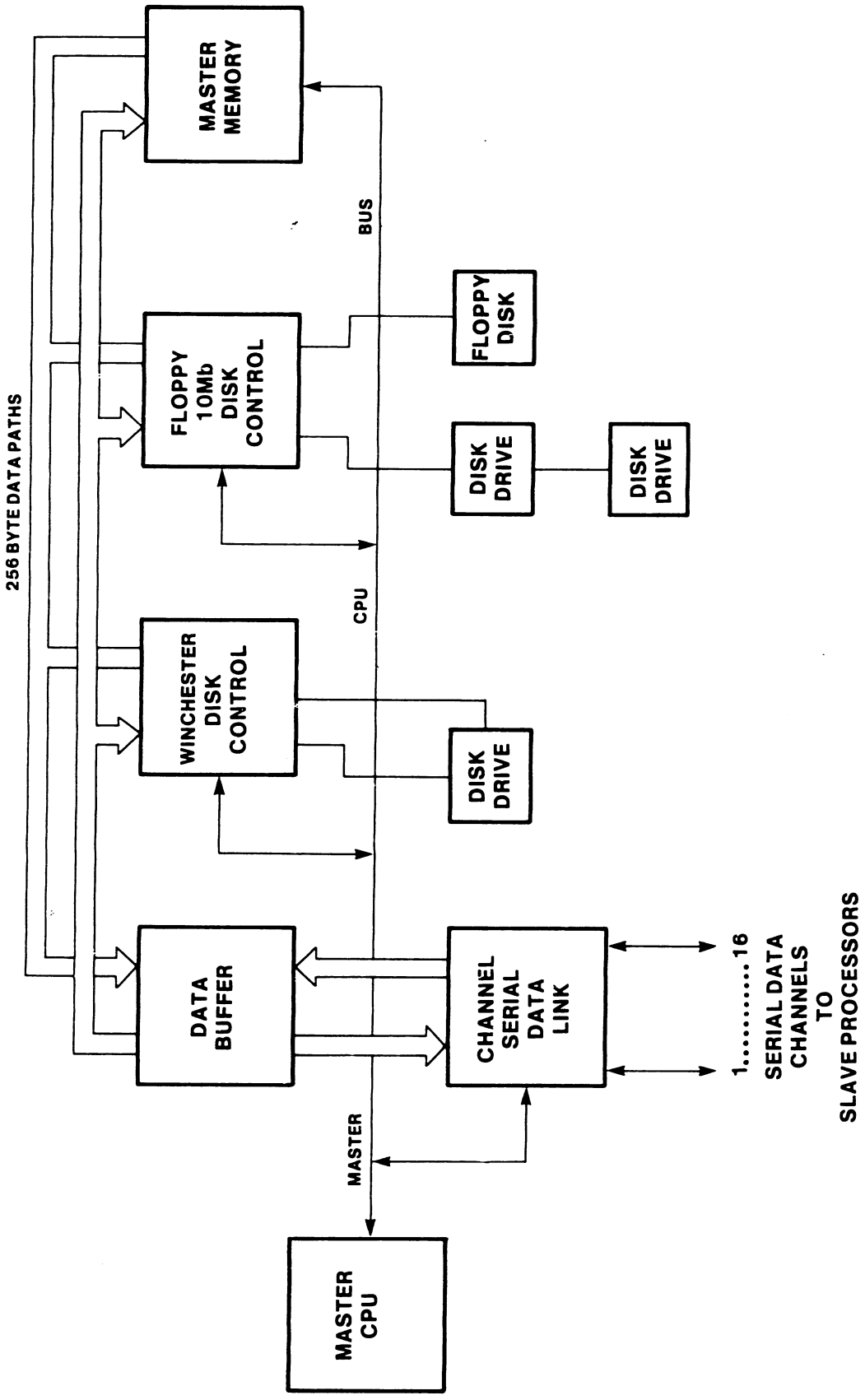

Figure 2-1. OIS 105/115/125A/130A-E System Simplified Block Diagram

The CPU/MEMORY logic uses a Memory-Mapped I/O technique (MMI/O) to transfer all I/O commands. In MMI/O, I/O devices pose as memory devices, and as long as they respond like memory devices, the CPU can not tell the difference. By using MMI/O, one is able to take advantage of the larger Z80A instruction set that references memory address space. It permits direct arithmetic and logical operations on port data as well as transfers between any of the Z80A internal registers and the I/O port. Conventional I/O interfacing methods do not offer this versatility. Blocks of memory addresses are assigned to each of the system I/O devices and when specific locations are addressed they are decoded into commands on the associated device controllers. In the OIS 105/115/125A/130A-E systems, memory address locations 0C00 to 0FFF Hex are reserved for Memory-Mapped I/O, sandwiched between 3K of PROM (0000 to 0BFF Hex) and 60K of RAM (1000 to FFFF Hex). Although 1000 bytes are available for this purpose, only 256 bytes are needed at present.

2.3 MEMORY-MAPPED I/O DEVICE ADDRESSES

The I/O devices referred to are the TEN MEG/FLOPPY CONTROLLER, WINCHESTER CONTROLLER, DATA LINK CONTROLLER, and the CPU/MEMORY board itself. Each is assigned MMI/O address space according to the following table:

DEVICE TYPE	DEVICE NUMBER	ADDRESS SPACE (Hex)
CPU/MEM BOARD	0	0C00 to 0C3F
10 MEG/FLOPPY CONT.	1	0C40 to 0C7F
WINCH. CONTROLLER BD.	2	0C80 to 0CBF
DATA LINK CONT. BD.	3	0CC0 to 0CFF

The Master CPU's Z-80A is designed with an address bus of 16 bits for address selection (A_{15}-A_0). These address bits break down as follows for I/O operations:

1. Address bits A_{15}- A_{12} are used to select either a RAM memory bank or PROM.

2. Address bits A_{11}-A_{10} are used to select one of the four 1K memory locations within PROM. (The fourth 1K of PROM is Memory Mapped In/Out (MMI/O).

3. Address bits A_9-A_6 are used for Device selection (MCPU, 10 Megabyte and Floppy Disk controller, Data Link Control or Winchester disk controller). See table above.

4. Address bits A_5-A_0 are used for one of sixty-four command selections.

For example, when the CPU Address Bus holds address ($0CC0_H$ = 0000 1100 1100 0000), an 0CC0 MMI/O command is generated on device 03, the DATA LINK CONTROLLER Board, as follows:

$A_{15} - A_{12}$	$A_{11} - A_{10}$	$A_9 - A_6$	$A_5 - A_0$
0 0 0 0	1 1	0 0 1 1	0 0 0 0 0 0
1 of 16 MEMORY BANK SELECTIONS	1 of 4 PROM SELECTIONS	1 of 16 DEVICE SELECTIONS	1 of 64 COMMAND SELECTIONS
0000 SELECTS PROM	11 SELECTS MMI/O	0011 SELECTS DATA LINK CONTROLLER	000000 SELECTS 1-BYTE STATUS COMMAND

2.4 MASTER UNIT DATA FLOW

Data Flow in OIS 105/115/125A/130A-E systems can be divided into eight functional categories:

1. DISK WRITE TO MASTER MEMORY

   256-Byte Sectors are read from a Disk and written into Master 'RAM' Memory, a sector at a time. This is how the Initial Program Load, (IPL) is accomplished.

2. DISK READ FROM MASTER MEMORY

   256 Byte 'Pages' are read from Master 'RAM' Memory and written to the Disk, a Sector at a time. This is how Volume Label information is written to the disk.

3. INPUT SLAVE STATUS

   The Master CPU commands a specified 'Slave' Work Station or Printer to send its current status to the CPU. The 4 status conditions are:

   a. Power On (PO) - Slave power on or off.

   b. Memory Parity Error (MPE) - A parity error occurred in the Slave's memory.

   c. Channel Parity Error (CPE) - The slave data channel logic detected a parity error on one or more of the previously received characters.

   d. Initial Program Load State (IPL) - The slave device has been powered on but is not running because it:

      1. is waiting for an "IPL" from the Master.
      2. is waiting on a RESTART command from the Master.
      3. has had a hard failure.

4. SLAVE RESTART

   The Master CPU commands a specified 'Slave' Work Station or Printer to do a 'Restart' due to a reported error from that unit or because that unit was just powered up.

5. ONE-BYTE WRITE

   The Master CPU sends a 1 Byte Function Code, Slave Code, Drive Status or Function Release to a specific address in the selected slave's memory.

6. ONE-BYTE READ

   The Master CPU commands a Slave to send it a One Byte Function code, Data Address (2 Bytes), or Slave Code from a specified address in that Slave's memory.

7. BLOCK WRITE TO SLAVE

   A 256 Byte Sector is read from a Disk sector specified by the CPU and written to a specified page of a selected Slave Memory under Master CPU control.

8. BLOCK READ FROM SLAVE

   A 256 Byte 'Page' is read from a selected Slave Memory and written to a specified disk sector under Master CPU control.

2.5 AUTOMATIC STATUS OPERATION (ASOP)

The OIS 105/115/125A/130A-E System data link expands on the basic slave protocol by performing an Automatic Status Operation (ASOP) after each transfer operation except for the STATUS transfer command. The ASOP automatic slave STATUS read always reflects the slave's evaluation of the last transfer command. This relieves the Master software of the task of queueing a STATUS request following each command while other requests for the data link are backed up.

In addition, the received slave status error type bits are OR'ed together and presented in the master status word allowing the controlling software to see the result of each transfer as seen at both ends of the cable, by just examining one location.

2.6 THE CHANNEL SERIAL DATA LINK

The DATA LINK CONTROL board (210-7503) combined with the DATA BUFFER board (210-7504) provide the interface between the Master CPU and all peripheral devices. Together the two boards are referred to as the CHANNEL SERIAL DATA LINK (CSDL). The CSDL logic can be divided into five functional blocks, one of which is the 7504 DATA BUFFER. The other four blocks, located on the DATA LINK CONTROL board, are:

1. Master CPU (MCPU) command and Status interface
2. Slave channel selection logic
3. Serial data transmitting and receiving logic
4. Line protocol command transmission and timing logic

The DATA LINK CONTROL board provides the communication interface between the Master CPU and slave devices such as workstations and printers. It interprets and executes CPU MMI/O commands to control the flow and direction of communications between the master and its slaves. In addition, it resolves conflicting line use requests and provides the neccessary control signals to the DATA BUFFER board.

The 7504 DATA BUFFER board serves as an intermediate storage area for data transfers between Master Memory and slave devices. It contains 256 bytes of Static RAM FIFO in addition to a 32 channel coaxial transmitter/receiver section. The data transfer is set up by a few commands from the CPU to the DATA LINK CONTROL board and one of the Disk Drive Controller boards. Then the hardware on the respective boards execute the transfer, leaving the CPU free to perform other tasks as needed. Four different types of data transfer involve the Data Buffer board. They are:

1. Block Read from Slave
2. Block Write to Slave
3. Disk Read from Master Memory (DMA READ)
4. Disk Write to Master Memory (DMA WRITE)

The DATA BUFFER board services a maximum of 16 lines. Each line (or channel) is a coaxial cable pair that can be up to 2000 feet long. The 16 channels are labeled CH01 through CH16 with CH00 (Channel Zero) being reserved for Master Memory. The CSDL logic remains in the transmit state except when actually receiving data from a selected slave. All slaves remain in the receive state except when individually selected and commanded by the master to transmit.

The CSDL logic (DATA BUFFER plus DATA LINK CONTROL board) is the only controller capable of executing a DMA block transfer. A DMA block is 256 bytes of data to be transferred between Master Memory and the DATA BUFFER (in either direction). The DMA transfer is initiated by the Z80A CPU when it issues a string of MMI/O commands to the DATA LINK CONTROL board. This board decodes these commands into either a Block Read from Master Memory, or a Block Write to Master Memory. The DATA LINK CONTROL board then generates a CBUSREQ signal which causes the Z80A on the CPU/MEM board

to enter a WAIT state. In addition, the CPU Address, Data, and Control Busses are tri-stated so that the DMA transfer logic can use the busses to access Master Memory. The DATA LINK CONTROLLER then provides the proper address and control signals to execute the transfer.

2.7 THE DISK DRIVE CONTROLLERS

The 7502 TEN MEG/FLOPPY DISK CONTROLLER interfaces the OIS Master to a 300 kilobyte Shugart type Floppy Diskette drive and one or two 5 or 10 Megabyte HAWK hard disk drives. The 7653/7950 WINCHESTER DISK CONTROLLER interfaces the OIS Master to either a Shugart or Quantum fixed disk drive, depending on model. The Winchester drives range from 2.5Mb to 33.6Mb formatted capacity and are generally used to store the system operating software as well as all active document files. The floppy diskette drive is used for archiving and for loading diagnostics and operating software into the system.

All disk operations are controlled by a series of MMI/O commands issued by the MCPU and all the data transfers occur in 256 byte blocks between the DATA BUFFER and the particular disk controller. When writing to a disk, a disk controller converts the parallel data from the DATA BUFFER to serial data for transfer to the disk drive. Similarly, when reading from a disk, the controller will convert the serial data obtained into parallel data to be supplied to the DATA BUFFER.

The 10-Megabyte (Hard Disk Drive) and Floppy disk controller board 7502 is the interface between the MCPU and the selected disk drive (Floppy or 10 Megabyte/Hard Disk drives). Both the Floppy and Hard Disk Drives are controlled by a series of Memory Mapped Input/Output (MMI/O) commands issued by the MCPU which permits the selected disk to read or write data to or from any selected bank of memory. The data transfers are always via the Processor Communication Channel (DMA). The commands for both the floppy and hard disk drives are general enough to permit both types of drives to operate with the 7502 controller.

The operating commands controlled by the disk controller and performed by the disk drives are the "READ", "WRITE" and "FORMAT" operations. The Read and Write operations are 256-byte transfers from a selected disk to a selected slave or master memory bank or from a selected slave or master memory bank to a selected disk. The Format is an operation that prepares the disk by loading the preamble and identifying each sector with the Header bytes for a specific Track and Sector address for the controller to identify.

The time required to transfer data internally to or from the disk drives depends on the type of disk drive selected. The Hard disk can Read and Write data at ten times the rate of the Floppy drive. This situation requires the controller to be capable of processing the data at a higher rate. The A and B clock generator is designed to operate at these two rates; generating clocks that will fill the requirements.

The 10 Meg/Floppy controller board is addressed as DEVICE TYPE 01 and will use PROM Memory Mapped I/O addresses $0C40_H$ to $0C7F_H$ for operating commands. The controller board will always be attached to a Floppy drive. In addition the controller will support a maximum of two 10-megabyte CDC HAWK (Model 6560) disk drives.

CHAPTER 3 OPERATIONS

CHAPTER 3

OPERATIONS

3.1 INTRODUCTION

This chapter describes the main switches, controls, and indicators for the OIS 105/115/125A/130A-E Master Processors addressed in this manual. Controls and indicators for the CRT workstation and Hawk disk unit are also discussed in this chapter.

TABLE 3-1 OIS 105/115/125A/130A-E CONTROLS AND INDICATORS

NAME	SECTION
Power Switch	3.2.1
Front (Operator) Panel	3.2.1
Option Switches	3.2.2.1
Diagnostic Switches	3.2.2.1
Diagnostic LEDs	3.2.2.1
10 Meg/Floppy Disk Activity LED	3.2.2.2
Voltage Selector Switch	3.2.2.3
7653 WINCHESTER "B" CONTROLLER Board Switch	3.2.2.4
Winchester Disk Drive Unit	3.2.2.5
Hawk disk unit controls and indicators	3.3
CRT workstation controls and indicators	3.4

3.2 MASTER-PROCESSOR CONTROLS AND INDICATORS

Controls and indicators for the Master Processor are located on the front panel, the PCBs, and on the side of the power supply chassis.

3.2.1 Master Processor Front Panel

The locations of front-panel controls and indicators are called out in Figure 3-1. Their functions and settings are described in the associated Table 3-2.

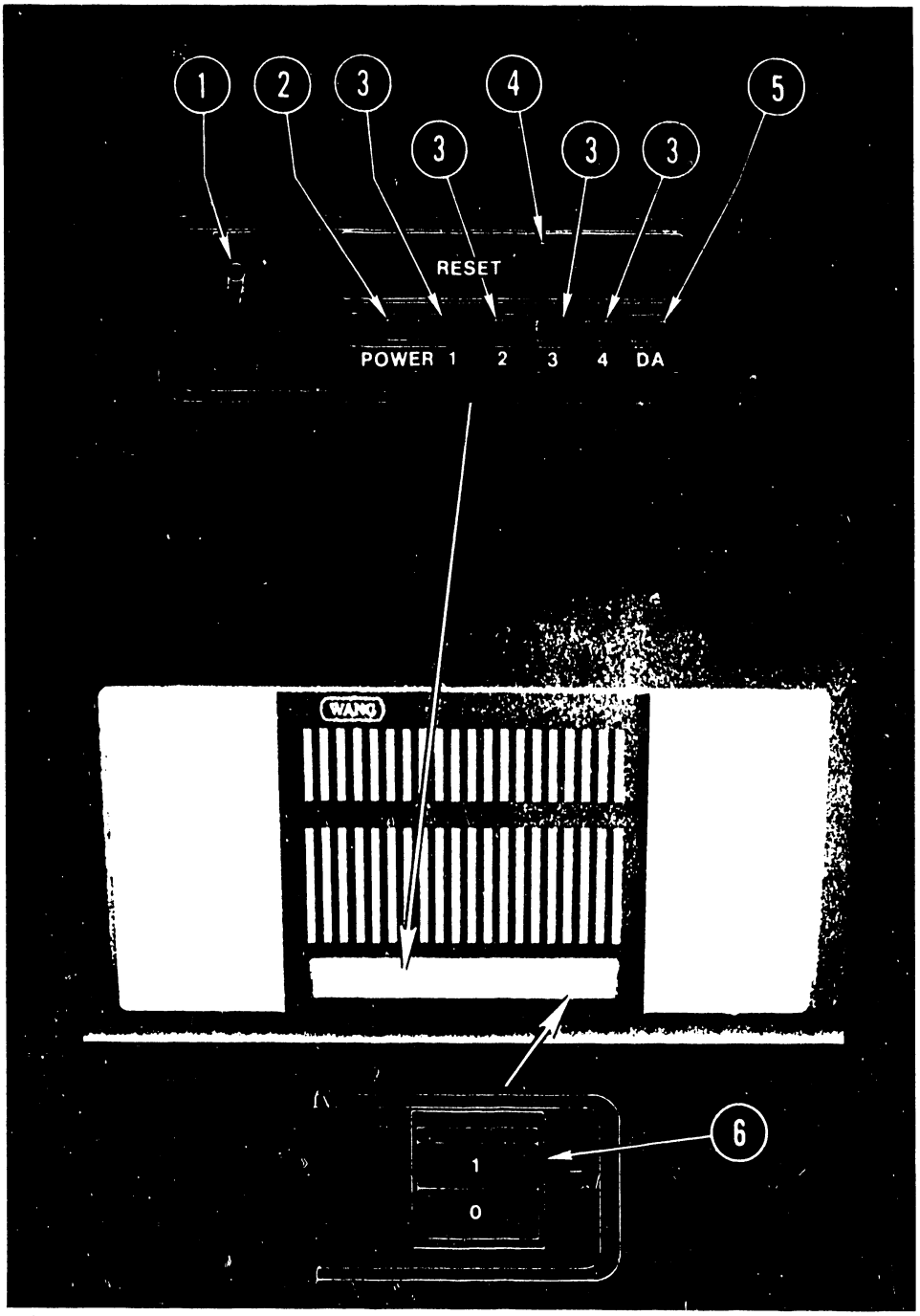

Figure 3-1. Master Processor Front-Panel Controls and Indicators

TABLE 3-2 MASTER PROCESSOR FRONT-PANEL CONTROLS AND INDICATORS

ITEM	NAME	TYPE AND FUNCTION
1	DISK-SELECT	Three-position toggle switch. Set to System Disk where IPL program is located. UP (-) = Floppy diskette MIDDLE (--) = Hawk disk unit DOWN (---) = Winchester disk drive
2	POWER LED	Indicates AC power applied to Master processor. Flashes during power-up diagnostics and when an error condition is detected. Steadily illuminated while the system is operational.
3	ERROR LEDs 1, 2, 3, 4	Error lights; indicate type of error detected during power-up diagnostics. LED 1 indicates a fatal error. LEDs 2, 3, and 4 indicate errors which are correctable by the operator. Refer to Appendices D and E for error descriptions.
4	RESET	Red pushbutton; IPL's system by forcing system to address 0000H. When released forces system into Power Up Diagnostics.
5	DA	LED; indicates Winchester disk activity. Not used on OIS 125A/130A systems.
6	POWER-ON SWITCH	Rocker-type switch; Energizes Master Unit and forces system into Power-up diagnostics.

3.2.2 Master Processor Internal Controls and Indicators

3.2.2.1 7501-D CPU/MEMORY Board

Internal controls and indicators located on the 7501-D board comprise those used for diagnostics and those used for options. The locations of the controls and indicators are called out in Figure 3-2, their function and use, in Table 3-3.

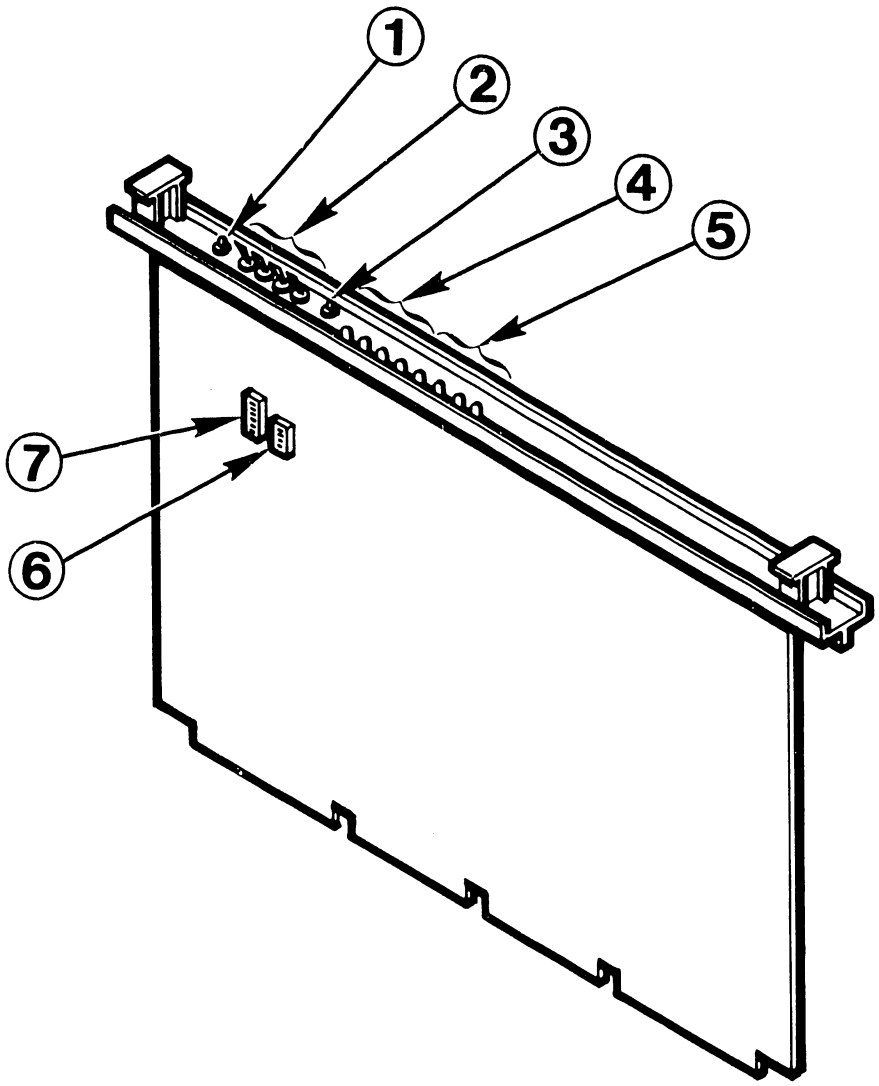

Figure 3-2. Master Processor Internal Controls and Indicators
7501-D CPU/MEMORY Board

TABLE 3-3 MASTER PROCESSOR INTERNAL CONTROLS AND INDICATORS
7501-D CPU/MEMORY BOARD

ITEM	NAME	TYPE AND FUNCTION
1	RST	Restart pushbutton; forces system to trap at address 0066H; same effect as non-maskable interrupt.
2	DS4, DS3, DS2, DS1	Diagnostic switches; used to start diagnostic programs at particular locations. All switches should be positioned OFF for normal operation. Appendices D and E contain information concerning their use.
3	DPB	Diagnostic pushbutton; initializes requested diagnostic programs.
4	DL7-DL4	Diagnostic LEDs; display fatal "detailed error code" during power-up diagnostics. The detailed error codes do not apply if the error is not fatal. (See Appendices D and E.)
5	DL3-DL0	Diagnostic LEDs; display the test number being executed during power-up diagnostics. Also used to display Extended Error information. (See Appendices D and E.)
6	SW1	Option switches; 5-bank DIP switch. For future use. Position all switches to OFF.
7	SW2	Option switches; 8-bank DIP switch. OIS 125A: position switch 1 ON All other OIS: position switch 1 OFF BASIC purchased, position switch 3 ON BASIC not purchased, position switch 3 OFF Position switches 2, 4, 5, 6, 7, and 8 OFF.

3.2.2.2 7502 - 10 MEG/FLOPPY CONTROLLER Board

The activity LED indicates activity on either a Hawk disk drive or on the Shugart floppy diskette drive.

ITEM 1 10 Meg/Floppy Disk Activity LED

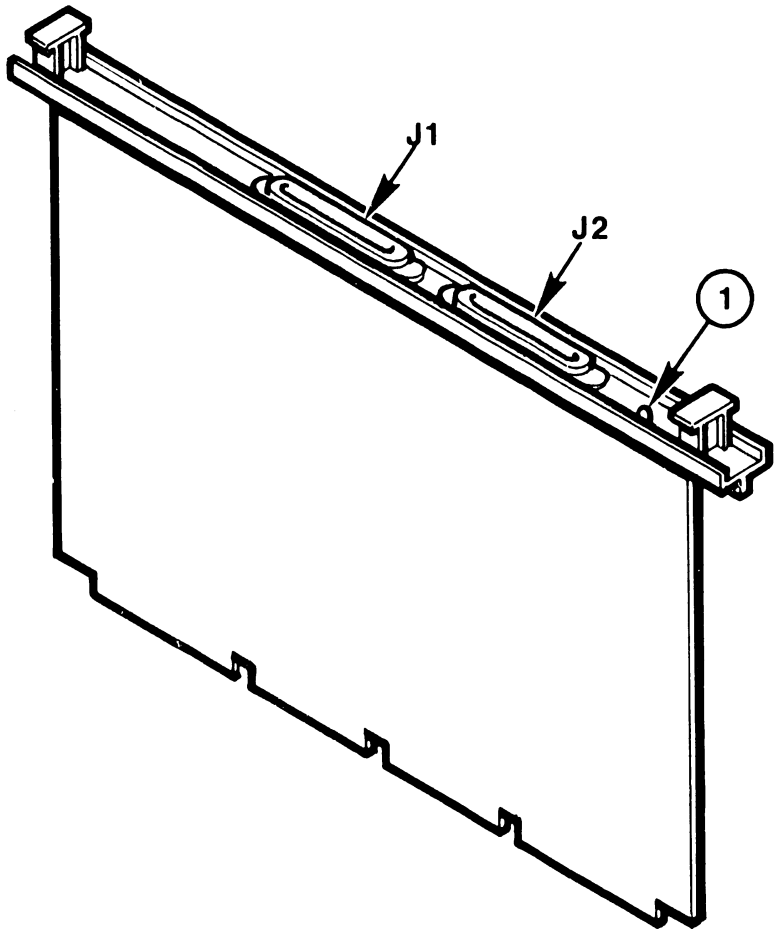

Figure 3-3. Master Processor Internal Controls and Indicators
7502 - 10 MEG/FLOPPY CONTROLLER Board

3.2.2.3 Voltage-Selector Switch

The voltage-selector switch, located on the side panel of the power-supply chassis, is used to select 115 VAC or 230 VAC according to the line voltage available. Changes in operating frequency (50/60 Hz) require a complete change of power supply and floppy diskette. The part numbers necessary to make such a change may be found in the IPB of Chapter 7.

1 Slide switch; sets Master Processor to correct line voltage.

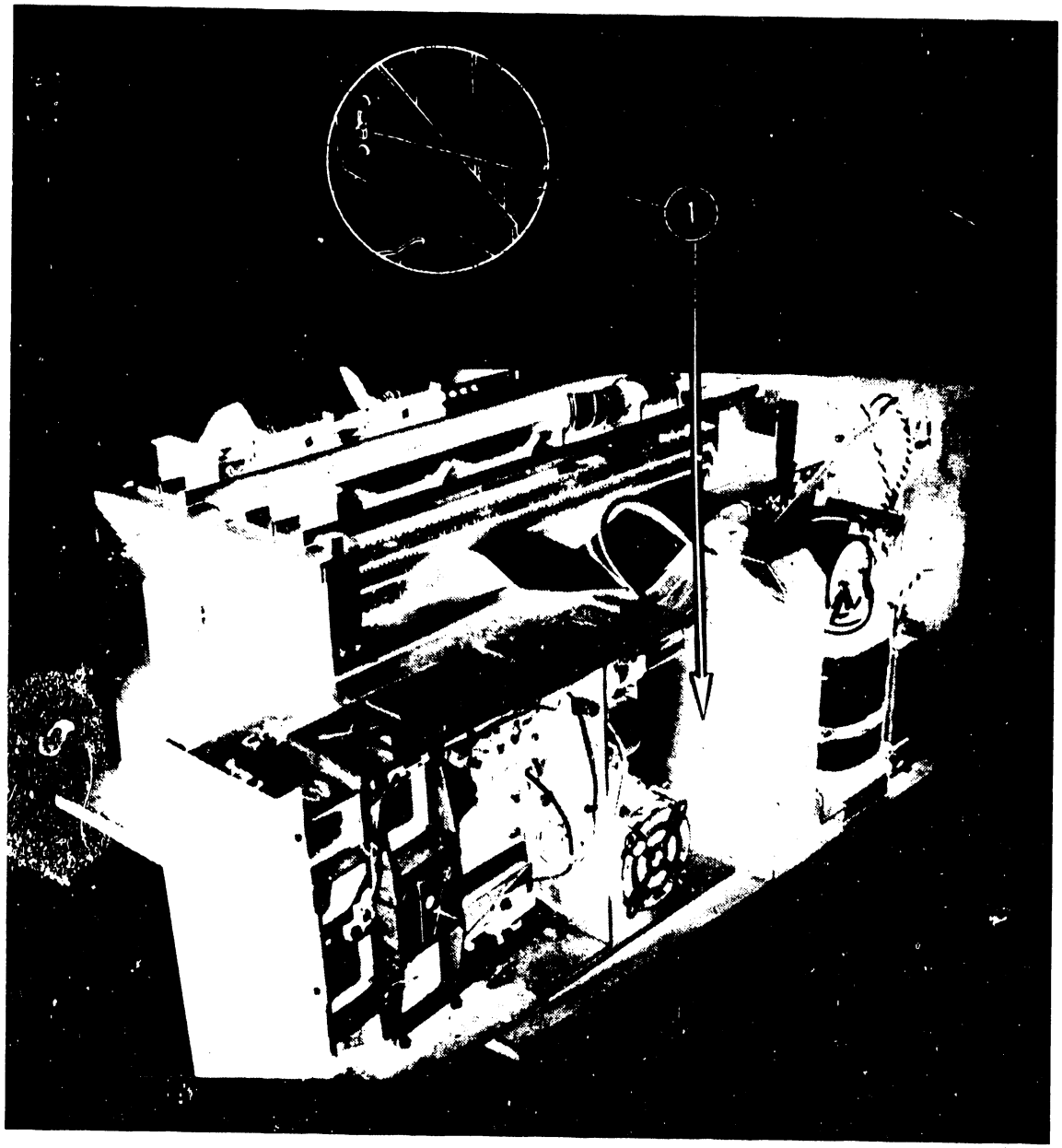

Figure 3-4. Location of Voltage-Selector Switch

3.2.2.4 7653 WINCHESTER "B" CONTROLLER Board

The 7653 board has a 4-bank DIP switch for Winchester disk drive model selection. The positioning of these switches is shown in Figure 3-5.

1 105 Switch setting.
2 115-1 and 130B switch setting.
3 115-2 and 130C switch setting.
4 115-3 and 130D switch setting.
5 115-4 and 130E switch setting.

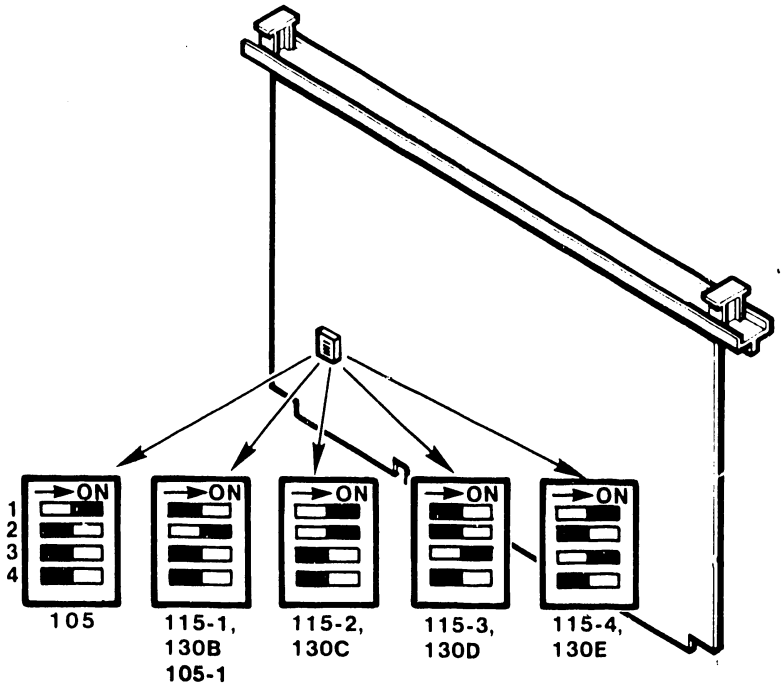

Figure 3-5. 7653 WINCHESTER "B" CONTROLLER Switch Configurations

3.2.2.5 Winchester Disk Drive Unit

The Winchester disk drive unit control board (for both Quantum and Shugart) has a drive select option and a voltage option. These options are selected by placing the shorting jumpers on the appropriate pins.

The drive select option is always DS1 and the voltage option is always -5V. Figure 3-6 shows the placement of the shorting jumpers.

1 Drive select option jumper.
2 Voltage option jumper.

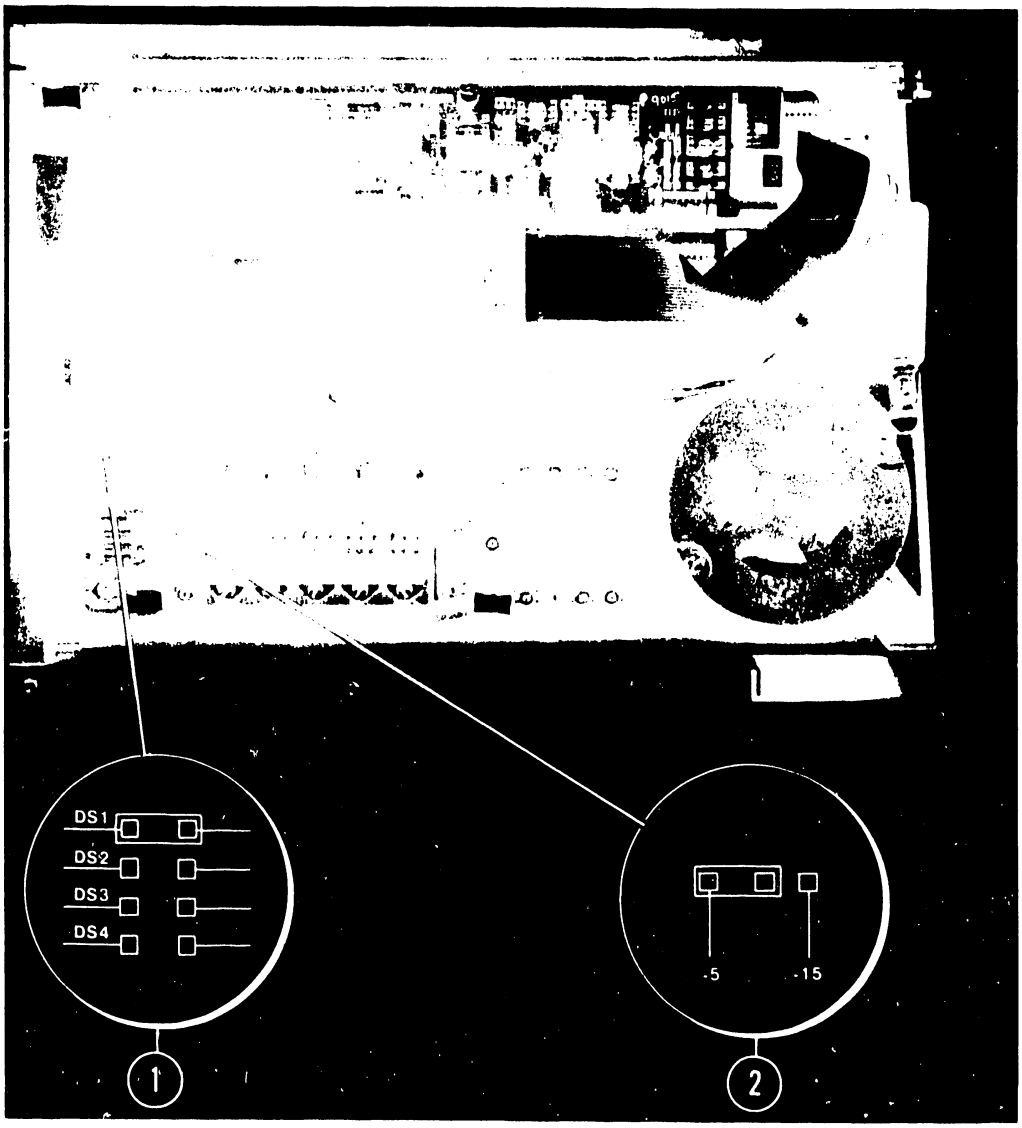

Figure 3-6. Winchester Drive Option Jumper Placement

3.3 HAWK DISK UNIT CONTROLS AND INDICATORS

Operator controls and indicators for the Hawk disk unit are described in the CDC HAWK Field Maintenance Manual (729-0884); refer to this document for further information.

TABLE 3-4. CONTROLS AND INDICATORS FOR THE HAWK DISK UNIT

ITEM	NAME	TYPE AND FUNCTION
1	POWER SWITCH	Rocker switch; energizes disk unit.
2	CB1 , CB2	Circuit breakers; provide protection for AC-power and DC-logic circuits, respectively.
3	TRACK INDICATOR	Vernier scale; indicates the tens- and units-digit of the track number.
4	BRUSH INDICATOR	Slot and alignment mark; indicates position of the brush motor.
5	CONTROL PANEL	Pushbuttons/lights; operator controls and fault indicators used during operation.

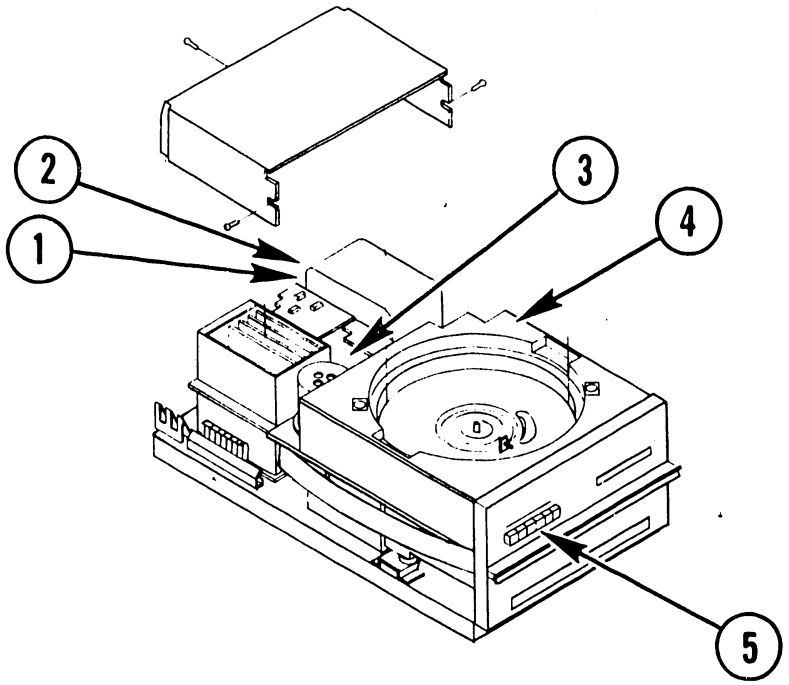

Figure 3-7. Hawk Disk Unit Controls and Indicators

3.4 CRT WORKSTATION CONTROLS AND INDICATORS

The CRT workstation is described in Model 5536 Series Workstation PMM (729-0522A). For more information on these controls and indicators, and the internal controls, refer to this publication.

TABLE 3-5 WORKSTATION CONTROLS AND INDICATORS

ITEM	NAME	TYPE AND FUNCTION
1	DISPLAY	CRT screen; displays input and output data.
2	CONTRAST	Potentiometer; adjusts contrast of "highlights".
3	BRIGHTNESS	Potentiometer; adjusts brightness of display.
4	KEYBOARD	"Typewriter" keys; input data.
5	CONNECTORS	BNC & TNC connectors; connects Master Processor.
6	POWER SWITCH	Toggle switch; energizes the workstation.
7	FUSE	2.5A Slow-Blow fuse; protection for all circuits.
8	TONE	Potentiometer; adjusts volume of "beep".
9	CLICKER	Potentiometer; adjusts volume of "clicker".

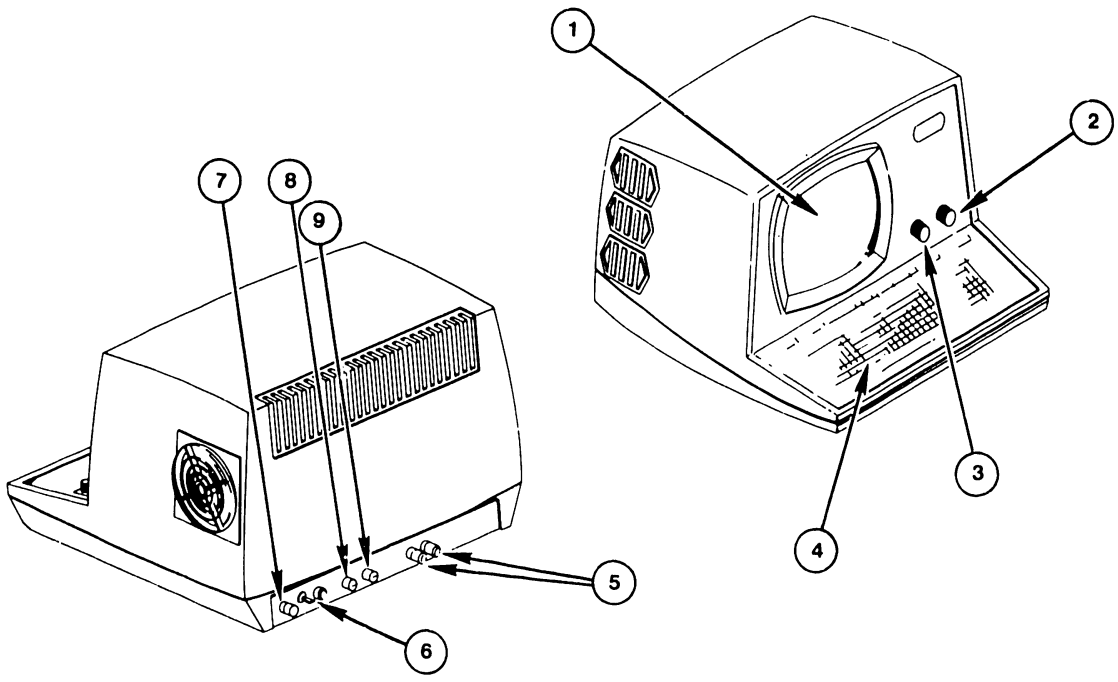

Figure 3-8. CRT Workstation Controls and Indicators

CHAPTER 4 INSTAL-LATION

CHAPTER 4

INSTALLATION

4.1 INTRODUCTION

The configuration addressed in this manual is a minimum configuration and comprises a Master Processor with single diskette drive, Winchester disk drive, CRT workstation, and Hawk disk drive. Although many of the systems addressed in this manual possess only some of the above items, it is necessary to address the entire range of characteristics. A system disk is provided by the Winchester disk drive, while "off-line" data storage is provided by the diskette drive. System control is accomplished at the CRT workstation.

This chapter sets forth a checklist for site preparation and the information necessary to unpack, inspect, make initial adjustments, and power-up the basic system. Specifically, this chapter provides:

ITEM	SECTION
Checklist for site preparation	4.2
Tools and Equipment	4.3
Unpacking & initial inspection	4.4
System Interconnections	4.5
Initial Setup, checks, and adjustments	4.6
Power-up Procedure	4.7
Master Unit Power-up Diagnostic	4.8
Power-down procedure	4.9
System Checkout	4.10
Final Word Processing Check	4.11
Detailed Procedures	4.12

4.2 CHECKLIST FOR SITE PREPARATION

Proper location and site preparation are important for overall operating efficiency. Ideally, the area should be easily accessible, relatively dust free, and temperature and humidity controlled. An adequate number of dedicated, regulated, noise-free AC power outlets should be provided to minimize electromagnetic interference. Additional information is provided in the Systems Installation Guide (729-0907), and the Site Preparation Guide (700-5978).

Selection and preparation of the site should already be completed. The purpose of this checklist in Table 4-1 is to highlight key items, and thereby promote the best operating environment.

TABLE 4-1. SITE PREPARATION CHECKLIST

ITEM	NOTES
Location	Master Processor near the primary user; devices may be as much as 2000 feet from the Master Processor, if necessary.
Space	Easy access by user and service personnel.
Storage	For manuals, materials (ribbon, paper, spare disks), etc.
Environment	An air-conditioned and humidity-controlled environment is recommended (see Table 4-2).
Power Circuits	(1) Separate, noise-free, 3-wire, 20 amp dedicated lines (properly installed in rigid metal conduits that are correctly joined to junction boxes). (2) Branch circuits protected by circuit breakers suitable for motor load application (see Table 4-2).
Grounding	Extremely important that the CPU and all disks be connected to a Grounding Conductor, which is securely attatched to the ground bus in the service panel. The Grounding Conductor is green, green with yellow stripe, or bare. In addition, all outlets used by the system peripherals must be properly grounded.
Dust Free	No noticeable accumulation of dust in a 24-hour period.
Static Electricity	Preferably non-static floor materials.
Access	All doorways and corridors wide enough to allow passage of the system, and sufficient elevator weight-capacity (if used).

TABLE 4-2 ELECTRICAL AND ENVIRONMENTAL REQUIREMENTS *

DEVICE	VOLTAGE REQUIREMENTS	AMPS	BTU/HR (max.)
MASTER UNIT			
Domestic	115 VAC ± 10% (60 Hz ± 1 Hz)	4A	1700
International	230 VAC ± 10% (50 Hz ± 1 Hz)	3A	
5536 SERIES CRT/WS			
Domestic	115 VAC ± 10% (60 Hz ± 1 Hz)	2.5A	480
International	230 VAC ± 10% (50 Hz ± 1 Hz)	1.5A	
HAWK DISK DRIVE			
Domestic	115 VAC ± 10% (60 Hz ± 1 Hz)	4.6A	310
International	230 VAC ± 10% (50 Hz ± 1 Hz)	2.5A	

SYSTEM ENVIRONMENTAL SPECIFICATIONS

1.	Relative Humidity	40% to 60% (non-condensing)
2.	Ambient Temperature	60°F (15°C) to 80°F (28°C)
3.	Temperature Gradient	12°F/Hr (6.7°C/Hr)
4.	Max. Wet Bulb Temp.	75°F (24.5°C)

* All AC outlets used by the system and peripherals must be checked with the AC Outlet Impedence Tester (WL #727-0143) for proper polarity and grounding quality.

----------CAUTION----------

The AC Outlet Impedence Tester, when used on circuits employing a GFI, will cause the GFI to trip. In environments containing extremely important equipment, such as life support equipment, tripping a GFI could be disasterous.

4.3 TOOLS AND EQUIPMENT

4.3.1 Recommended Test Equipment / Tool List

OIS installation, repair, and maintenance procedures can be performed using the following tools and test equipment:

A. Customer Engineering Standard Tool Kit (WLI P/N 726-9401) containing the following :

1. Allen Wrench (Hex Key) Set.
2. Small Slotted Screwdriver (insulated shaft) (WL #726-9406) - for voltage adjustments.
3. Medium Phillips Screwdriver (WL #726-9407).
4. Medium Slotted Screwdriver (WL #726-9408).
5. Handle and Assorted Nutdrivers (WL #726-9478, 726-9459 through 9477).
6. Diagonal cutters (WL #726-9416)

B. Digital Voltmeter - (e.g. FLUKE Model 8022A, WL #727-0119).
C. Oscilloscope with two X1 probes and/or two X10 probes. (e.g. Phillips Model 3262, WL# 727-0054, probes - WL# 726-9689; Tektronix Model 465B, WL# 727-0001, probes - WL# 726-9690.)
D. Alcohol Pads (WL #660-0130).
E. Hypot/DC ESD Tester (WL #727-0144) (WL #727-0146 for 230 VAC, 50 Hz).
F. AC Outlet Impedence Tester (WL #727-0143).
G. Dry Air (WL #726-5816).
H. Media Solution (WL #726-8018).

4.3.2 Software Tools

Software diskettes and documents referenced in this manual are:

TITLE	DISKETTE/DOCUMENT
OIS 140-Class Power Up (PROM)	(702-0042)
OIS 140 Extended Memory Power Up (PROM)	(702-0123)
SYSEX15	(702-0127)
OIS 140-Class Master Monitor	(702-0057)
OIS Online Device Monitor	(702-0174)
OIS Online Device Part I	(702-0200)
OIS Online Printer Part I	(702-0176)
OIS Online Printer Part II	(702-0149)

4.4 UNPACKING & INITIAL INSPECTION

4.4.1 Unpacking the Master Processor

---------- CAUTION ----------
Inspect the shipping cartons and report any damage to the carrier. Do not proceed with unpacking until certain that this will not void any claims to the carrier.

Unpacking the Master Processor follows standard procedures for "foam in place" packaging:

A. Cut the sealing tape and open the top of the shipping carton
B. Remove the foam padding at the top and sides of the Master Processor
C. Carefully, lift the Master Processor clear of the shipping carton and place it on the mounting provided.

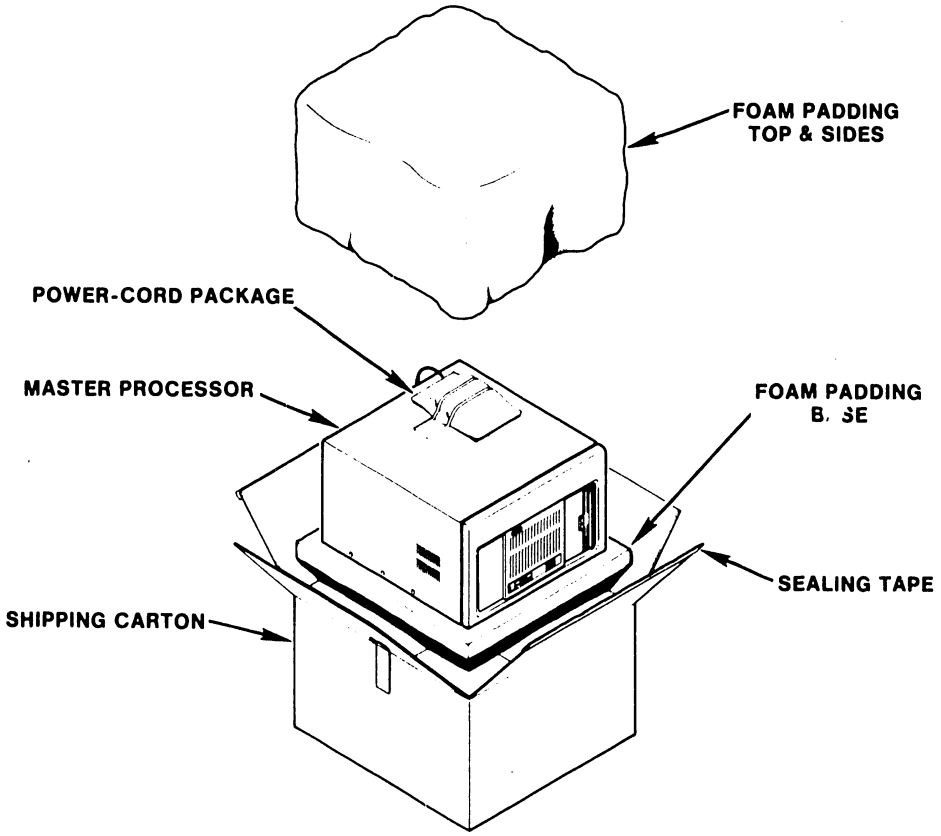

Figure 4-1. Packaging for the Master Processor

4.4.2 Unpacking the Hawk Disk Drive

```
----------CAUTION----------
Inspect the shipping cartons and report any damage to the
carrier.  Do not proceed with unpacking until certain that
this will not void any claims to the carrier.
-------------------------------------------------------
```

The Hawk disk unit is strapped to a cushioned pallet for shipping. A corrugated shipping carton covers the unit and is also strapped down.

Unpacking procedures comprise 6 steps:

A. Using diagonal cutters (or other suitable tool), cut the steel straps securing the shipping carton.
B. Using a slotted screwdriver, remove the staples which attach the carton to the pallet and lift off the carton.
C. Remove any packing material.
D. Cut the steel straps securing the Hawk disk unit.
E. Carefully, lift the Hawk disk unit clear of the pallet and place it on the mounting cabinet.
F. Thoroughly clean the unit of all particles of shipping dust.

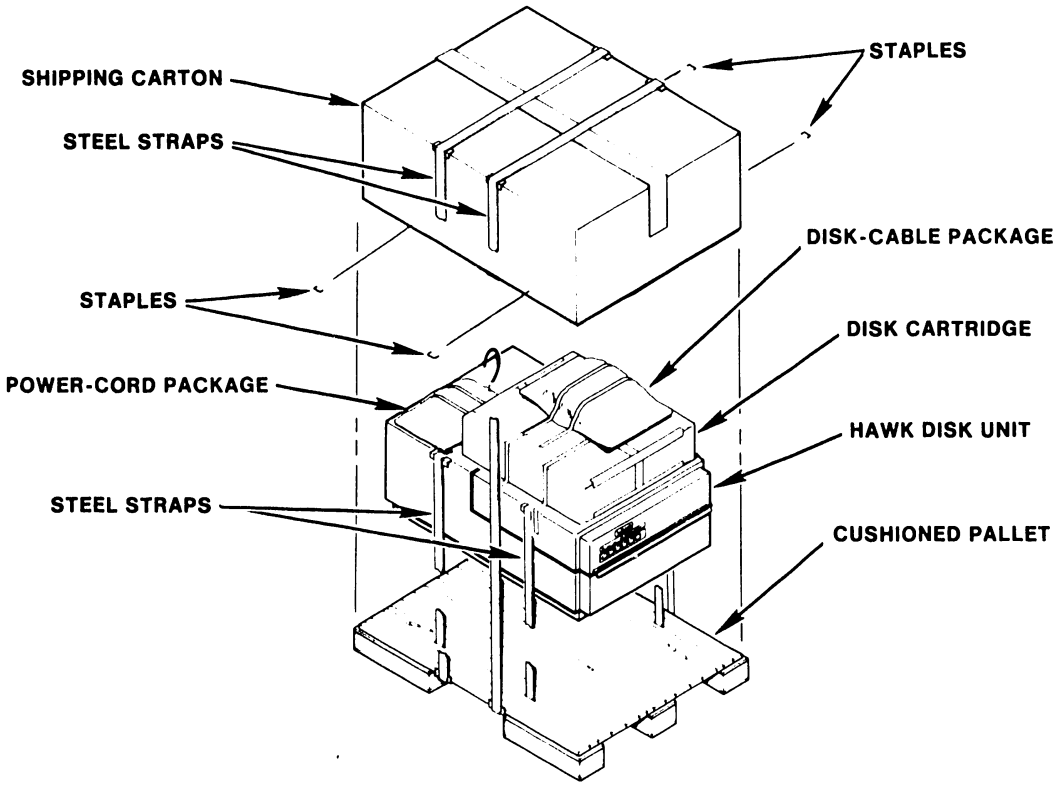

Figure 4-2. Packaging for the Hawk Disk Unit

4.4.3 Unpacking the CRT Workstation

---------- CAUTION ----------
Inspect the shipping cartons and report any damage to the carrier. Do not proceed with unpacking until certain that this will not void any claims to the carrier.

Unpacking the CRT workstation follows standard procedures for "foam in place" packaging:

A. Cut the sealing tape and open the top of the shipping carton
B. Remove the foam padding at the top and sides of the CRT workstation
C. Carefully, lift the CRT workstation clear of the shipping carton and place it in its designated location.
D. Remove CRT cover and discard shipping foam and film on CRT screen.

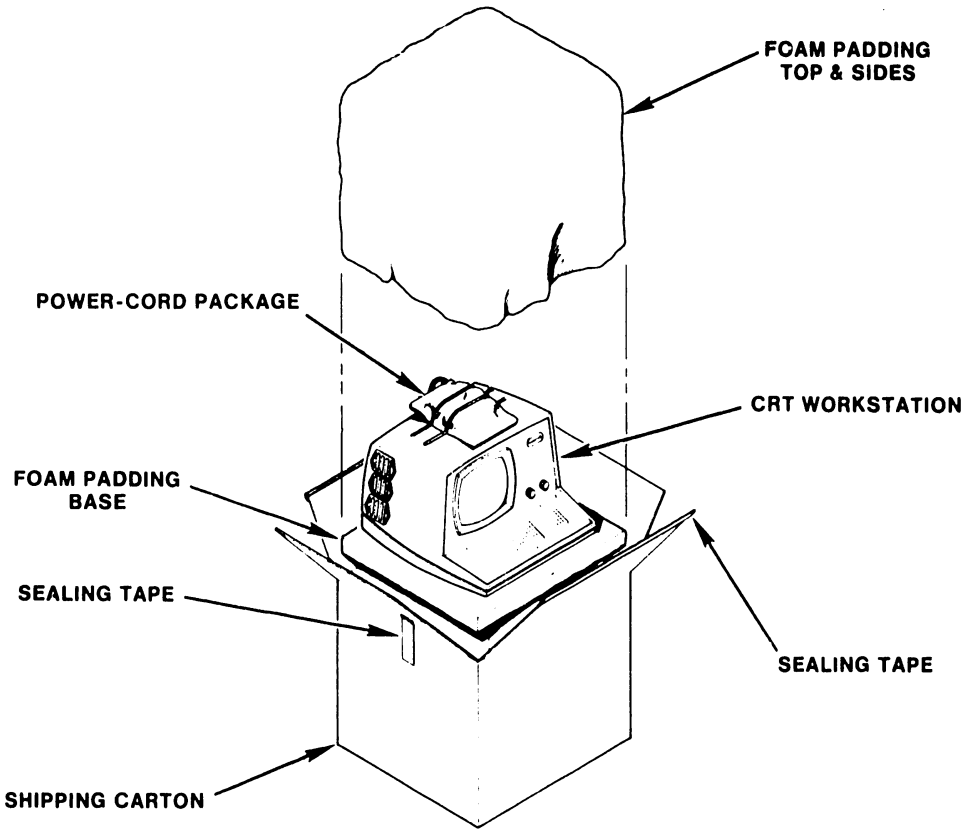

Figure 4-3. Packaging for the CRT Workstation

4.4.4 Inspecting the Master Processor

---------- CAUTION ----------

Do not apply power to the Master Processor until the shipping lock has been removed from the Winchester drive unit. Damage to the drive will result if this warning is not heeded.

A. Position the power switch to 0 (OFF).
B. Remove the top cover. (See paragraph 4.12.1.1)
C. Inspect the inside, the motherboard, and the power supply chassis for wire clippings, metal shavings, etc.
D. Clean as necessary.
E. Remove the diskette drive unit. (See paragraph 4.12.1.2)
F. Check and tighten wiring connections. (See paragraph 4.12.1.3)
G. Correctly position the voltage-selector switch. (See paragraph 4.12.1.4)
H. Check and properly seat all PCBs and connectors. (See paragraph 4.12.1.5)
I. Connect the I/O channels to the data-buffer board. (See paragraph 4.12.1.6)
J. Replace the diskette drive unit. (See paragraph 4.12.1.7)
K. Remove the Winchester disk drive unit. (See paragraph 4.12.1.8)
L. Remove shipping lock(s) on Winchester drive unit. (See paragraph 4.12.1.9)
M. Replace the Winchester drive unit. (See paragraph 4.12.1.10)
N. Complete and mail the shipping card. (See paragraph 4.12.1.11)
O. The top cover need not be replaced until the system installation and checkout is complete.

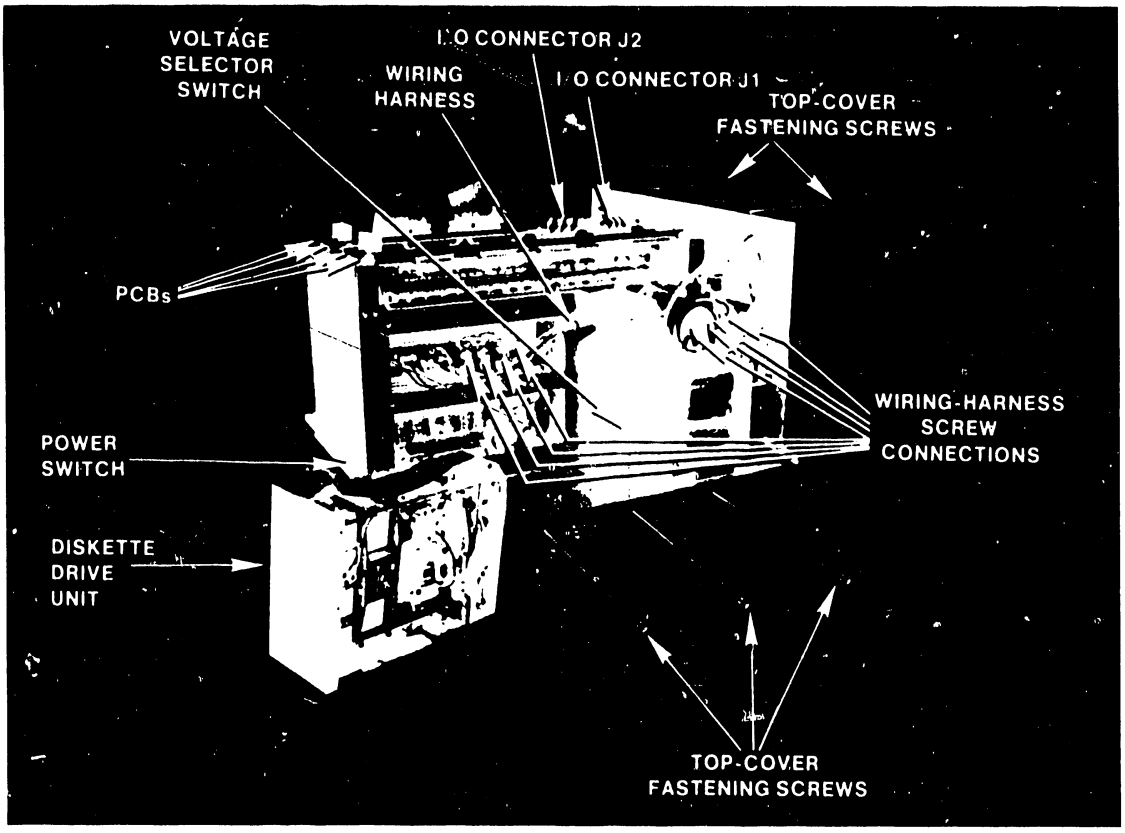

Figure 4-4. Inspection items for the Master Processor

4.4.5 Inspecting the Hawk Disk Drive

The following procedures are detailed in the Wang/CDC Hawk Disk Drive Manual (729-0181); refer to this document for further information unless directed otherwise.

A. Remove the electronics cover.
B. Remove the carriage lock pin.
C. Remove the card-cage cover.
D. Remove the PCAs.
E. Set the option switches per Section 4.12.2.6.
F. Ensure that the ribbon cable is properly grounded and connected to the rear of the Hawk unit (see Sections 4.12.2.4 and 4.12.2.5).
G. Complete and mail the shipping card.
H. The electronics cover need not be replaced until the Initial Checks and Adjustments have been completed.

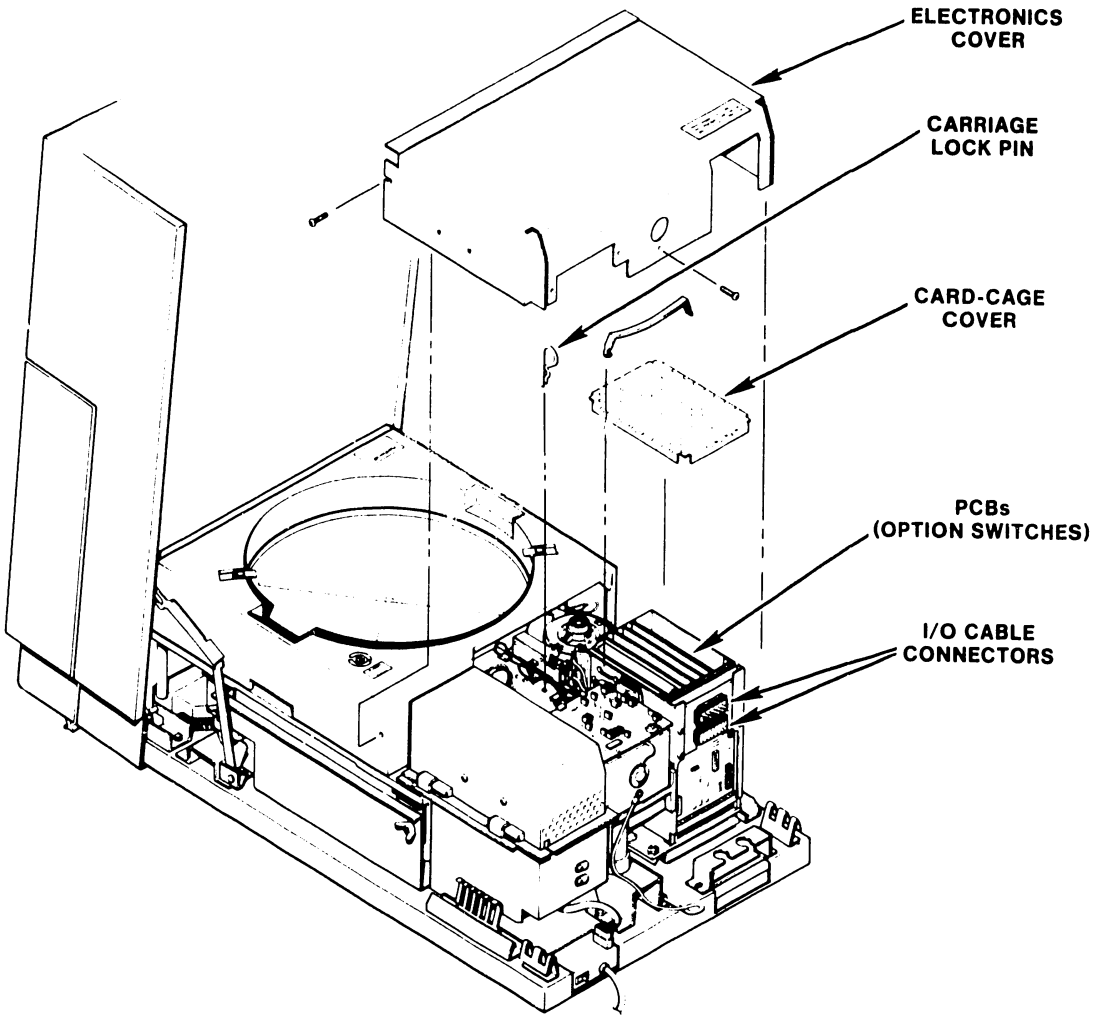

Figure 4-5. Inspecting the Hawk Disk Unit

4.4.6 Inspecting the CRT Workstation

These procedures are detailed in the Model 5536 Series Workstation PMM (729-0522A).

Inspection requires:

A. Removing the keyboard and main covers and discarding shipping foam and screen shield.
B. Inspecting for wire clippings, metal shavings, etc.
C. Setting the switches
D. Seating all plugable ICs.
E. Verifying voltages.
F. Completion and mailing of the shipping card

The covers need not be replaced until the Initial Checks and Adjustments have been completed.

4.5 SYSTEM INTERCONNECTIONS

4.5.1 Cable Connections

The Master Unit is connected to its various peripherals as follows:

A. Connect all slave devices to the serial connector plates at the rear of the Master Unit. A CRT/Workstation should be close to the master processor to serve as a 'system console' for running Master Monitor Diagnostics and the like.

   Be sure to number the coaxial cables at both ends, master and slave. Slave devices can be located up to 2000 feet from the Master Unit.

B. Connect the ribbon cable(s) from the serial connector plate(s) to the top of the 7504 DATA BUFFER board. The ribbon cable from adapter plate number one (channels 1-8) plugs into the J_1 connector. For OIS 125A, 130A-E systems, the second ribbon cable, channels 9-16 on connector plate number two, plugs into the J_2 connector.

C. In OIS 125A, 130A-E systems, the cables from the Hawk disk drive are inserted through clamps at the rear of the main chassis. The J_1 and J_2 plugs of the Hawk cable are inserted into the J_1 and J_2 connectors, respectively, of the 210-7502 PCB. See Sections 4.12.2.1 through 4.12.2.3 for detailed procedures.

4.5.2 Electrical Connections

---------- WARNING ----------

It is extremely important that all system equipment and all outlets are properly grounded: The Master Unit and all disks must be connected to a Grounding Conductor which is securely attached to the ground bus in the service panel. "The Grounding Conductor shall be...green...or green with yellow stripes, unless it is bare." -- National Electrical Code, Article 210, National Fire Protection Association.

All AC outlets used by the system and peripherals must first be checked with the AC Outlet Impedence Tester (WL #727-0143) for proper polarity and grounding quality.

A. Ensure that all equipment power switches are positioned "OFF" and the Master Processor Voltage Selector switch is positioned correctly (see Section 4.12.1.4)

B. Visually check the Winchester Drive Unit to see if shipping lock(s) have been removed. (see Section 4.12.1.9)

---------- WARNING ----------

Do not apply power to the Master Processor until the spindle lock (and actuator lock on Quantum drives) have been unlocked or removed from the Winchester drive unit. Damage to the drive will result if this warning is not heeded.

C. Plug the Master Processor power cable into the outlet provided and check voltages.

D. If applicable, plug the Hawk disk drive power cable into the outlet provided.

E. Plug the CRT Workstation power cable into the outlet provided.

4.6 INITIAL SETUP, CHECKS, AND ADJUSTMENTS

4.6.1 Initial Checks and Adjustments for the Master Processor

---------- WARNING ----------
Do not touch the heat sink: serious injury could result. The heat sink reaches very high temperatures when the unit is running and the top cover is removed.

A.	If applicable, remove the top cover.	(See Section 4.12.1.1)
B.	Check the PC board E-revision level.	(See Section 4.12.3.1)
C.	Properly set all switches.	(See Section 4.12.3.2)
D.	Position the power switch to "ON".	

---------- CAUTION ----------
Avoid touching bare leads and causing a short circuit: very little clearance is provided for these adjustments.

E.	Adjust voltages on CPU/MEM board.	(See Section 4.12.3.3)
F.	Test the diagnostic LEDs.	(See Section 4.12.3.4)
G.	Align the diskette drive unit.	(See Section 4.12.3.5)
H.	Replace the top cover.	(See Section 4.12.3.6)

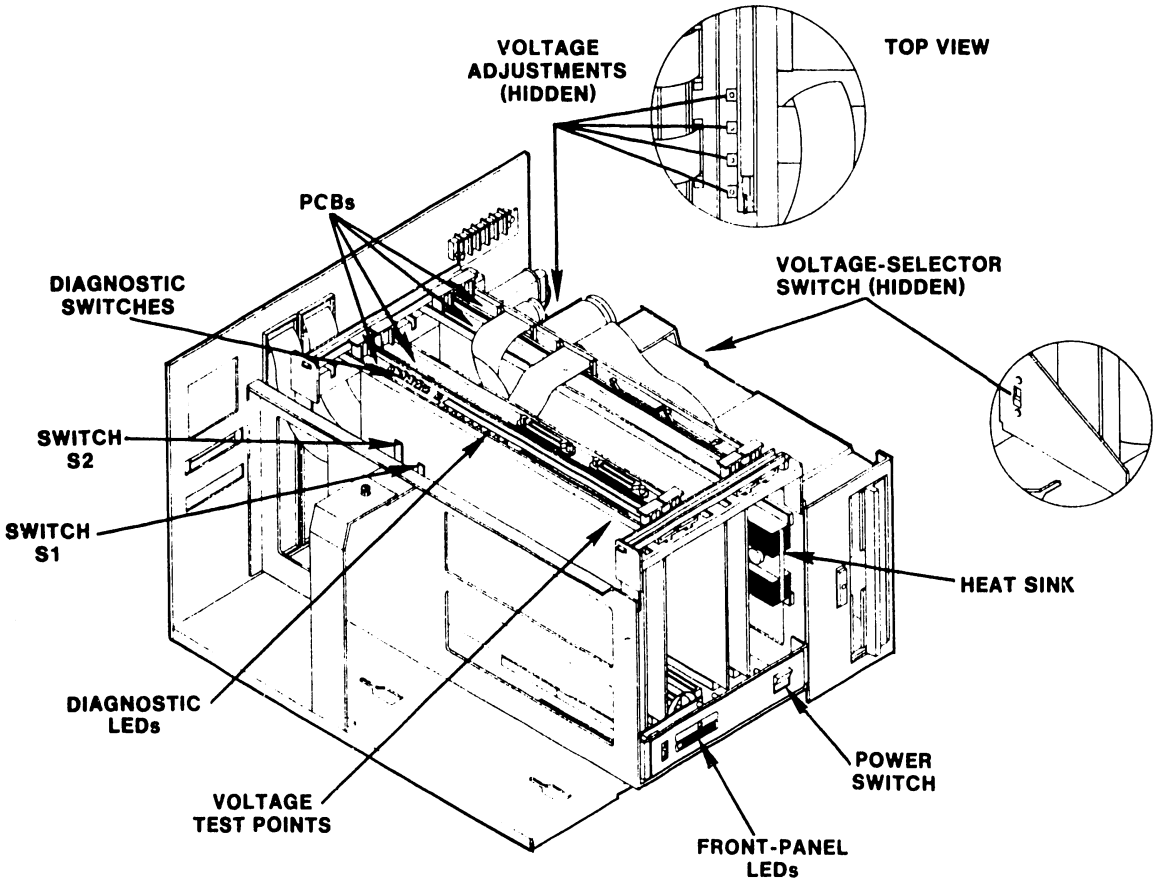

Figure 4-6. Initial Checks and Adjustments for the Master Processor

4.6.2 Initial Checks and Adjustments for the Hawk Disk Drive

The following procedures are detailed in the Wang/CDC Hawk Disk Drive Manual (729-0181); refer to this document for further information unless directed otherwise.

CAUTION

Stop the unit immediately if a pinging or scratching sound (caused by head-to-disk contact) is heard and persists. Also, keep the access door closed to prevent unnecesssary entry of atmospheric dust in order to obtain maximum performance and reliability.

A. Power up the Hawk unit(s).

B. Install the Cartridge Module(s).

C. Perform compatibility alignments as outlined in Section 3 of the manual cited above.

D. Replace all covers.

4.6.3 Initial Checks and Adjustments for the CRT Workstation

These procedures are detailed in the Model 5536 Series Workstation PMM (729-0522A).

Initial checks and adjustments comprise the following steps.

A. Turn power ON and adjust voltages
B. Turn power OFF and connect video cable
C. Connect fan
D. Connect brightness/contrast cable
E. Replace covers
F. Ensure free rotation of the fan blades
G. Tighten all screws

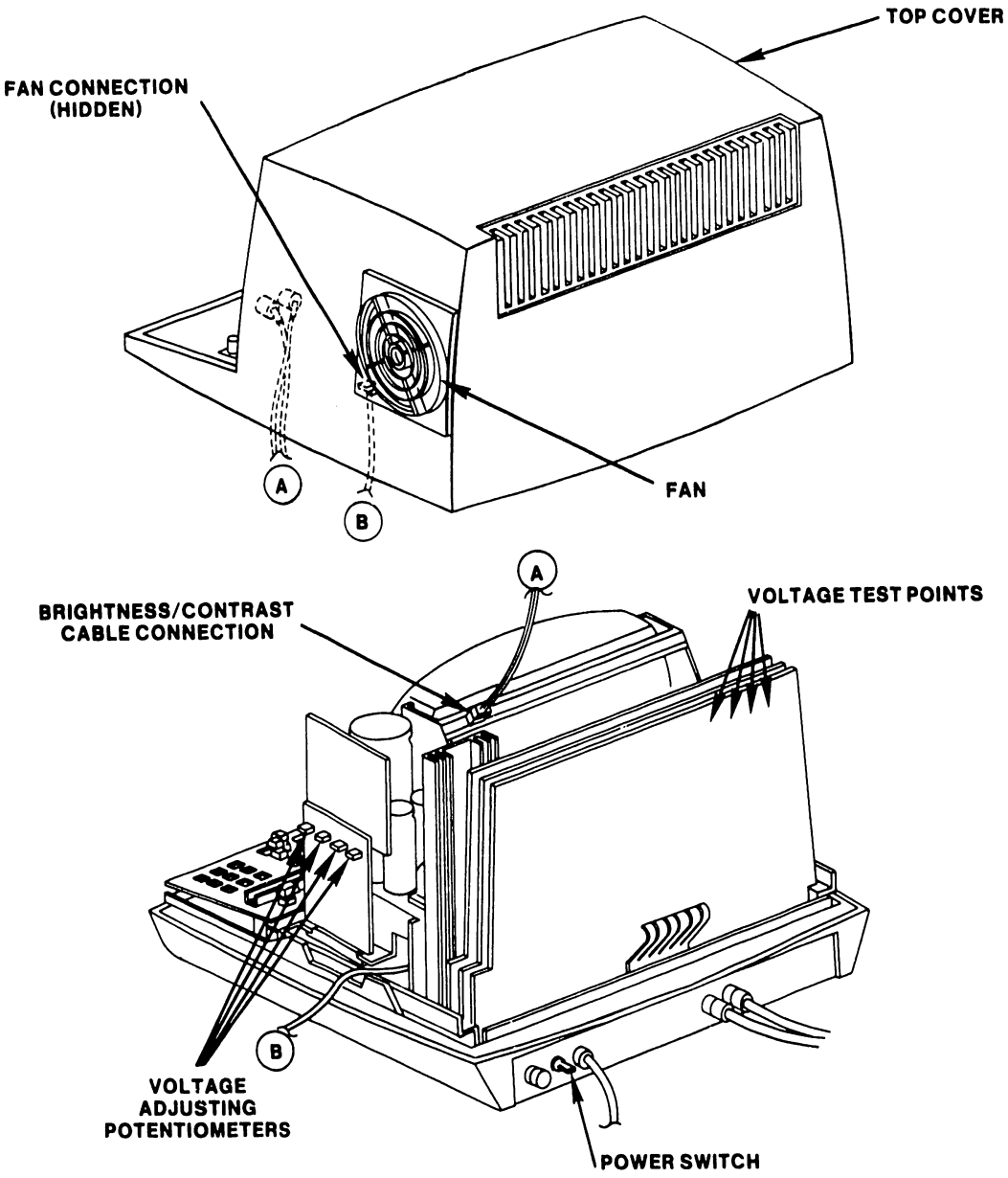

Figure 4-7. CRT Workstation Checks and Adjustments

4.7 POWER-UP PROCEDURE

Power is applied to the system upon completion of all installation checks and adjustments. The power switches for the Hawk and CRT Workstation are located at the rear of each unit. The START/STOP switch for the Hawk drive is located on its front panel. To minimize risk of damage to the system, follow the power-up procedure outlined below:

A. Position the Disk Select Switch on the Master Processor to indicate the location of the System Disk (see Section 3.2.1).
B. Position the power switch on the Master Processor to ON.

NOTE: Steps C, D, & E are not applicable to OIS 105/115 systems.

C. Position the power switch on the Hawk disk unit to "ON" and ensure that the blower motor starts. (This is the "standby mode".)

---------- CAUTION ----------

Do not power-up (or down) any optional drive unit if the system has been IPLed and is operating. Do not activate any drive units simultaneously: allow an interval of at least one minute to avoid overloading circuits. Wait a minimum of 5 minutes (30 minutes if room temperature was below 50°F during shutdown) for the equipment to stabilize before proceeding to activate the disk units.

D. If the optional disk unit is required, activate the unit by pressing the START/STOP pushbutton. (Note that the optional drive may be left in the standby mode if not required for daily operation; when required, activate and mount volume(s) using Disk Control.)
E. Activate the System Disk unit (Hawk) by pressing its START/STOP pushbutton.
F. Power-up all workstations and devices to be used.
G. Press RESET on the Master Processor.
H. Enter correct date and time when the IPL menu is displayed.

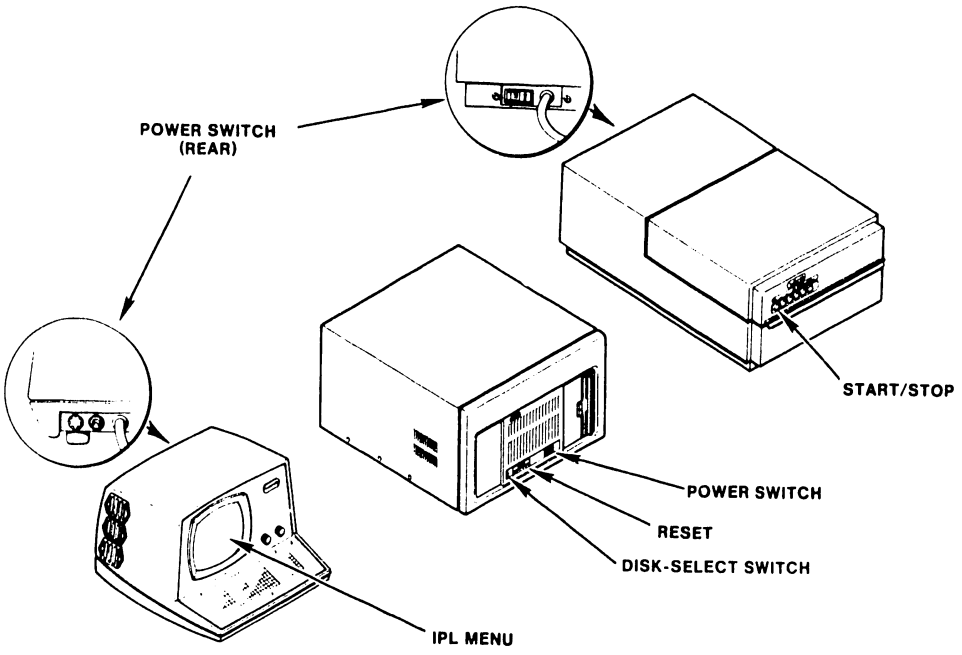

Figure 4-8. Controls for Power-up

4.8 MASTER UNIT POWER-UP DIAGNOSTIC

The Power-Up Diagnostic begins whenever the Master Unit is powered up, IPL'ed, or Reset and the system disk reaches operating speed. The diagnostics take approximately 15 seconds to complete.

Once the Power-Up diagnostic begins, the Power LED starts to flash. If all tests pass, the Power LED ceases flashing and goes to a steady-on state and the DATE/TIME sceen is displayed on the CRT. If an error occurs, an error code is displayed on the Front Panel Error LEDs of the Master Unit and the Power LED continues flashing (See Fig. 4-9). For detailed information concerning the OIS 140-Class Power-Up Diagnostic and is associated error codes, refer to Appendix D for the standard 64K CPU, and Appendix E for the 128K CPU.

4.9 POWER-DOWN PROCEDURE

A. Power down all system devices (excluding the Master Processor and disk units).

B. Press RESET on the Master Processor.

C. Press START/STOP pushbutton on the optional Hawk disk unit (if used).

D. Press START/STOP pushbutton on the System Disk unit (Hawk), if applicable.

---------- NOTE ----------
It is recommended that the drive units be left in standby mode (AC power only, and the blower motors running). This will keep the drive units stabilized and reduce contaminants.

F. Position the power switch(es) on Hawk disk unit(s) to OFF only after the START/STOP indicator is off (If applicable).

G. Position the power switch on the Master Processor to OFF.

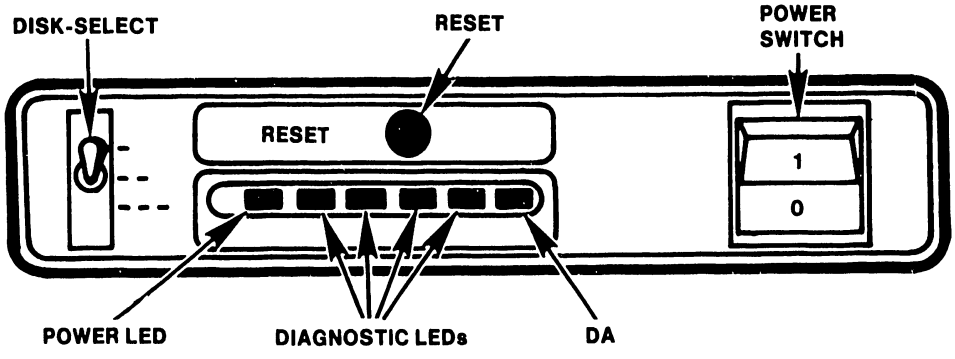

Figure 4-9. Master Unit Front Control Panel

4.10 SYSTEM CHECKOUT

System checkout is complete when the items on the following checklist have been accomplished:

A. Verify PCBs are properly seated and the switch settings for Master Processor and all peripherals are set correctly.

B. Verify connectors/cables are installed correctly on the Master Processor and peripherals.

C. Verify correct head alignment for all disk drives.

D. Verify static immunity for all system components (except standard archiving workstation) by ESD testing to 2500 V. (Refer to Chapter 5 of the Systems Installation Guide, WL# 729-0907.)

E. Exercise the Master Diagnostics Monitor for at least two passes of each diagnostic program. (See Section 8.3.3)

F. Run On-Line diagnostics for all peripheral devices attatched to the system. (See Section 8.3.5)

G. Adjust Printers for proper print quality.

H. Format and initialize System Disk, load software packages, format amd initialize the remaining volumes. Consult OIS Supervisor Procedures Manual (700-5562) for detailed instructions.

I. Perform Final Word Processing Check (See Section 4.11)

For persistent problems that can not be isolated by any of the above means, employ SYSEX15 to troubleshoot the system.

4.11 FINAL WORD PROCESSING CHECK

Assign a library to each workstation. The libraries should be equally divided among the volumes available to the system. Each workstation should run the glossary listed in Appendix C. This glossary will:

A. Create a New Document

B. Edit a Document by:

1. supercopying text from another document
2. super global replace words contained within the text
3. deleting words within the text

C. File document to archive diskette

D. Retrieve document from archive diskette

E. Delete document from archive diskette

F. Delete document from library

G. Start process all over again

Only archiving workstations and one standard workstation using the central archive drive, can perform steps C, D, and E simultaneously. This checkout should be run for one to two hours. Upon completion of this test, documents should be queued to every printer and printed out. At least 2 documents should be printed per printer.

Upon completion of this final check, all volumes should be reinitialized and software verified (i.e. Check to see that the software already loaded is correct, and all purchased options are on the system).

4.12 DETAILED PROCEDURES

4.12.1 Inspecting the Master Processor

4.12.1.1 Removing the Top Cover

Eight Phillips screws secure the top cover of the Master Unit: three at each side and two at the rear.

A. Remove the two Phillips screws at the rear of the unit.
B. Remove the three Phillips screws at each side of the unit.
C. Slide the cover forward and lift off.
D. Inspect the inside, the motherboard, and the power-supply chassis for wire clippings, metal shavings, etc.
E. Clean as necessary.

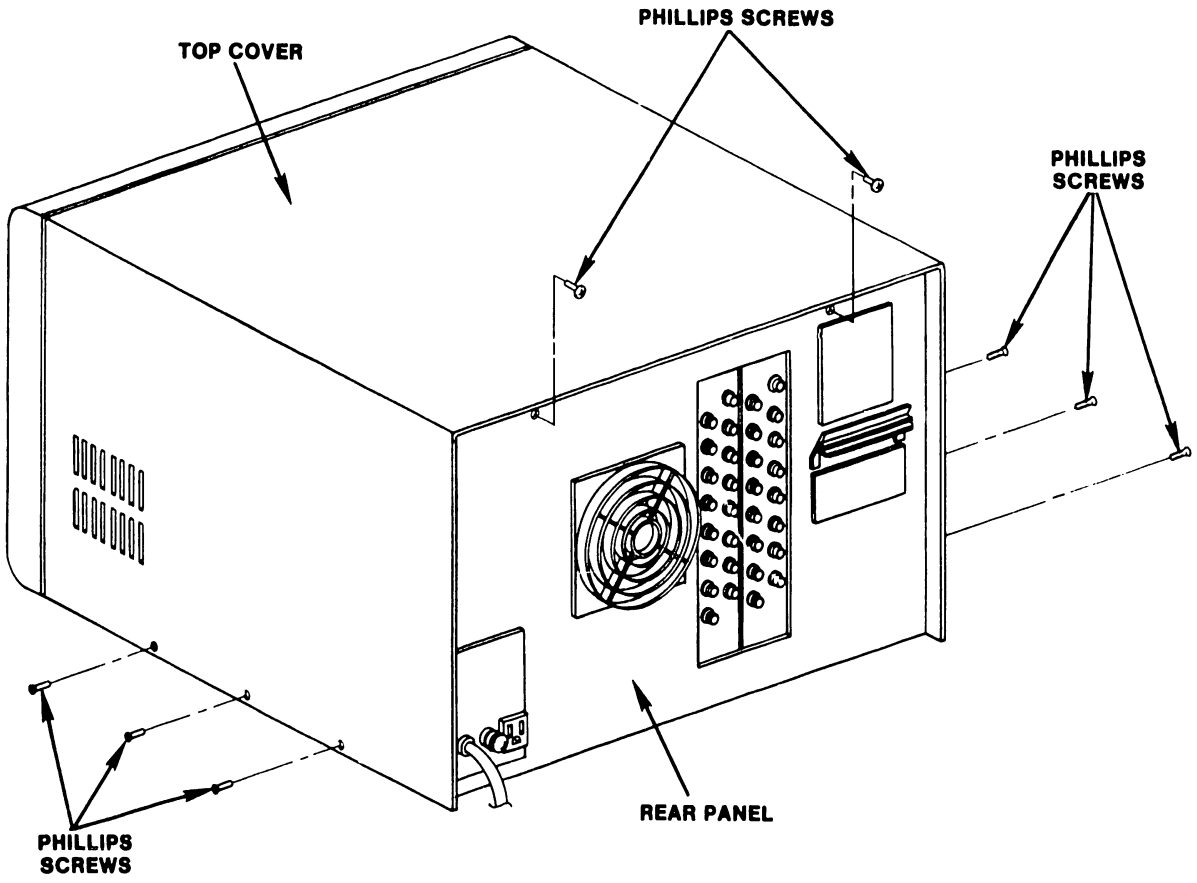

Figure 4-10. Top-Cover Removal

4.12.1.2 Removing the Diskette Drive Unit

The diskette drive unit is mounted on a base plate whose guides fit into corresponding slots in the Master Processor bottom pan. The entire unit is secured by a "captured" hold-down screw.

To remove:

A. Slide the Diskette (Floppy) Cable out of its retainer.
B. Disengage the "captured" hold-down screw.
C. Slide the diskette drive halfway out by firmly grasping the front of the unit and pulling out and up.
D. Disconnect the power cord and the Diskette (Floppy) Cable at the rear of the diskette-drive unit.
E. Pull the diskette drive clear of the Master Processor.

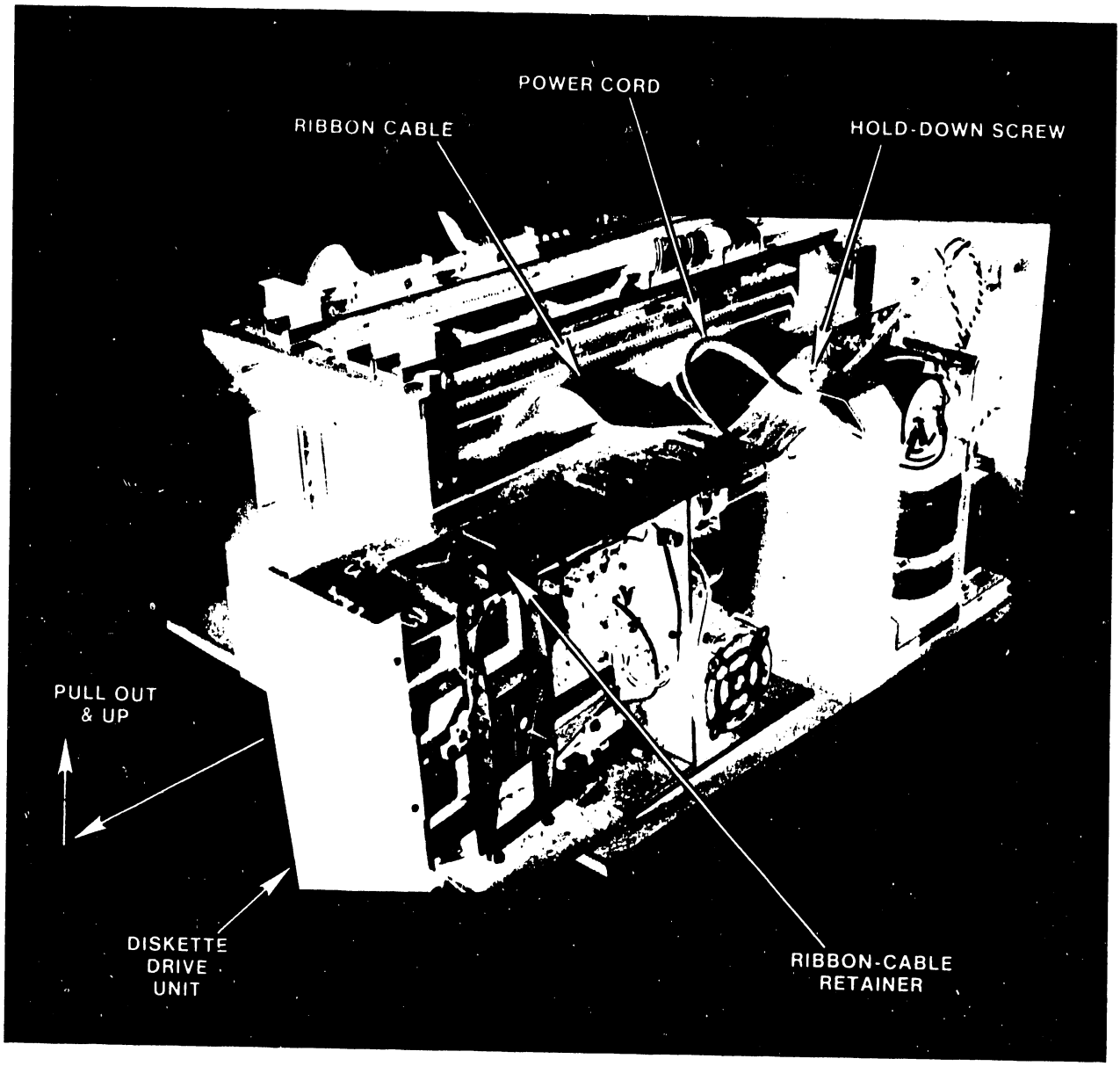

Figure 4-11. Diskette Drive Unit Removal

4.12.1.3 Tightening Wiring Connections

Screw connectors are used on the power supply and the heat sink wiring. There are 4 screw connections on the power supply and 4 on the heat sink.

---------- NOTE ----------
Solder connections have replaced these screw connectors on newer units.

A. The diskette drive must be removed in order to check or tighten the screw connectors on the heat sink.
B. Carefully tighten the screw connections on the heat sink. 3/16" and 5/16" open-end wrenches are needed to tighten the nuts. An offset screwdriver may be necessary to prevent the machine screws from turning.
C. Carefully tighten the screw connections on the power supply. A medium screwdriver may be used for this operation.

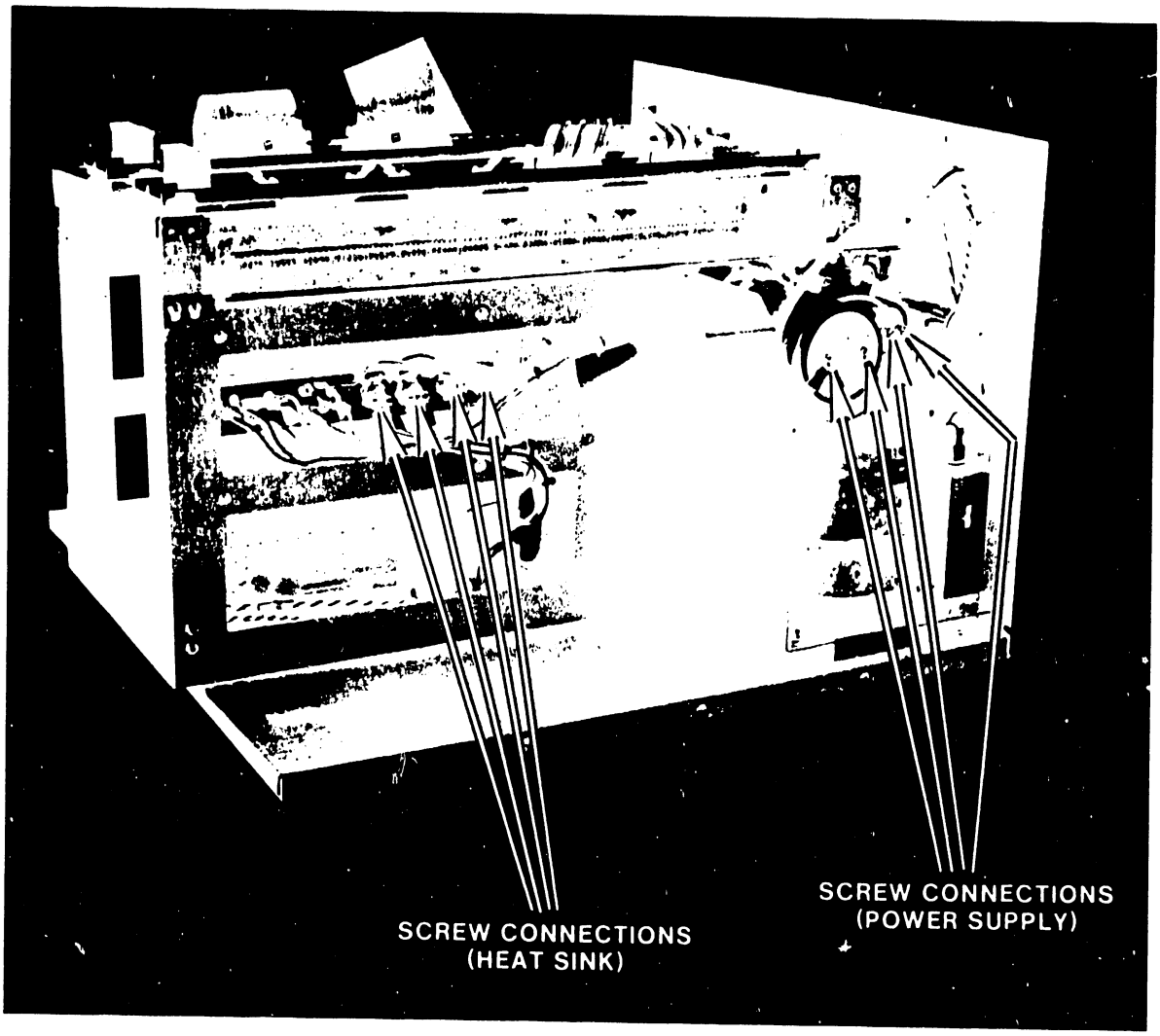

Figure 4-12. Wiring Connections

4.12.1.4 Positioning the Voltage-Selector Switch

The Master Processor is designed to operate on either 115-Vac 60Hz power input, or 230-Vac 50 Hz. A voltage-selector switch, located behind the diskette drive unit on the side of the power-supply chassis, is used to select the voltage to be used.

A. The diskette drive unit must be at least partially removed in order to check or reposition the voltage-selector switch.
B. Position the voltage-selector switch to the correct voltage; down selects 115 Vac, up selects 230 Vac. Both 115 and 230 are clearly marked on the switch.

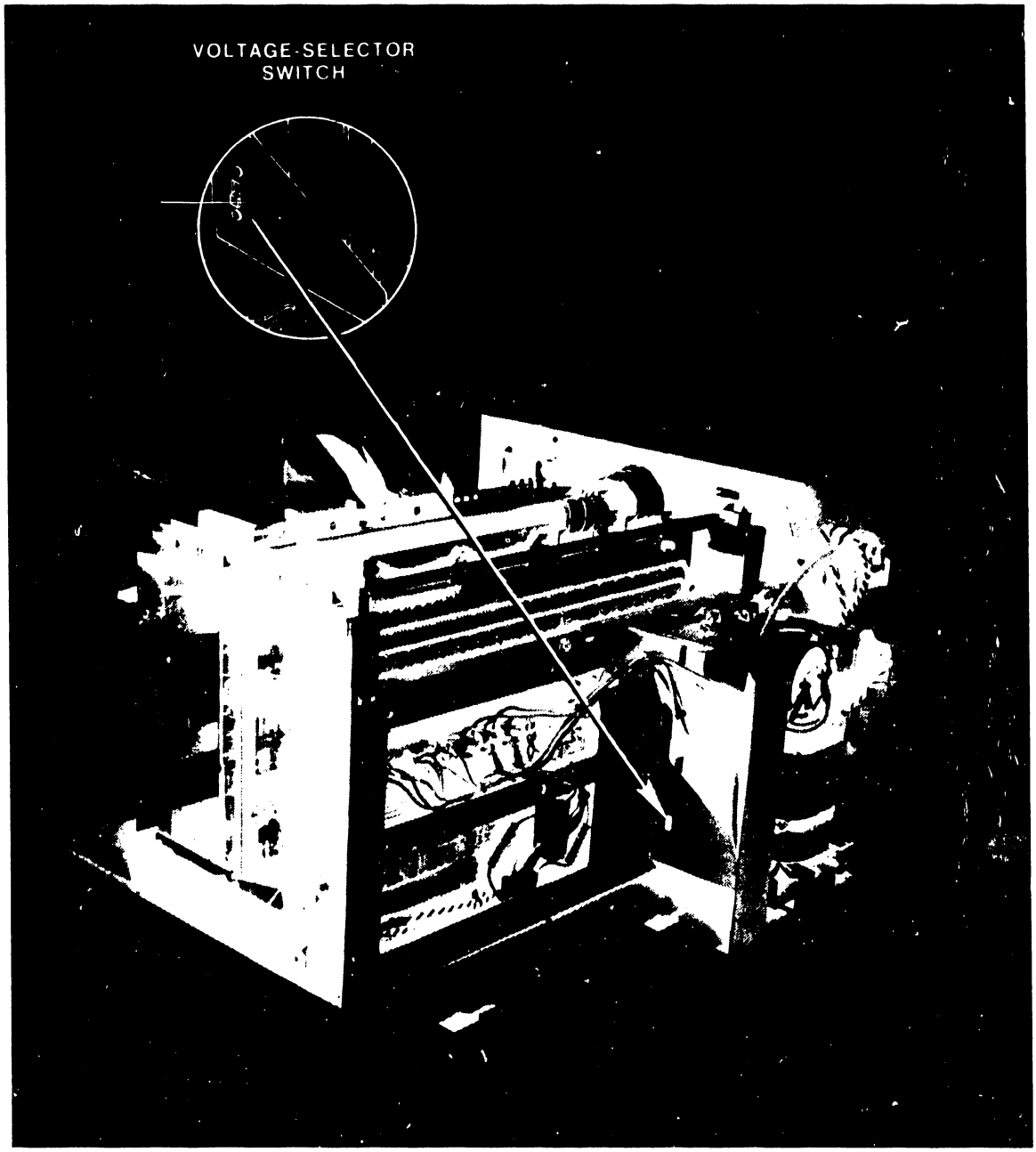

Figure 4-13. Voltage-Selector Switch

4.12.1.5 Seating PCAs and Connectors

The PCAs are secured by two board retainers. These board retainers are held in place by a single Phillips screw and a tab. The PCA faceplates should not fit snugly against the board racks: the clearance should allow 0.015 inches between the faceplate and the rack. (Note that a matchbook cover is approximately 0.015 inches thick.)

The diskette drive unit must be at least partially removed in order to seat its ribbon-cable connector on the motherboard.

A. Firmly seat the diskette drive ribbon-cable connector on the motherboard (push down on the connector).
B. Check the clearance between the PCA faceplates and the board racks: adjust if necessary. (See paragraph 5.3.3.1)
C. With correct clearance, firmly seat the PCAs in their connectors on the motherboard (push down on the PCA handles).

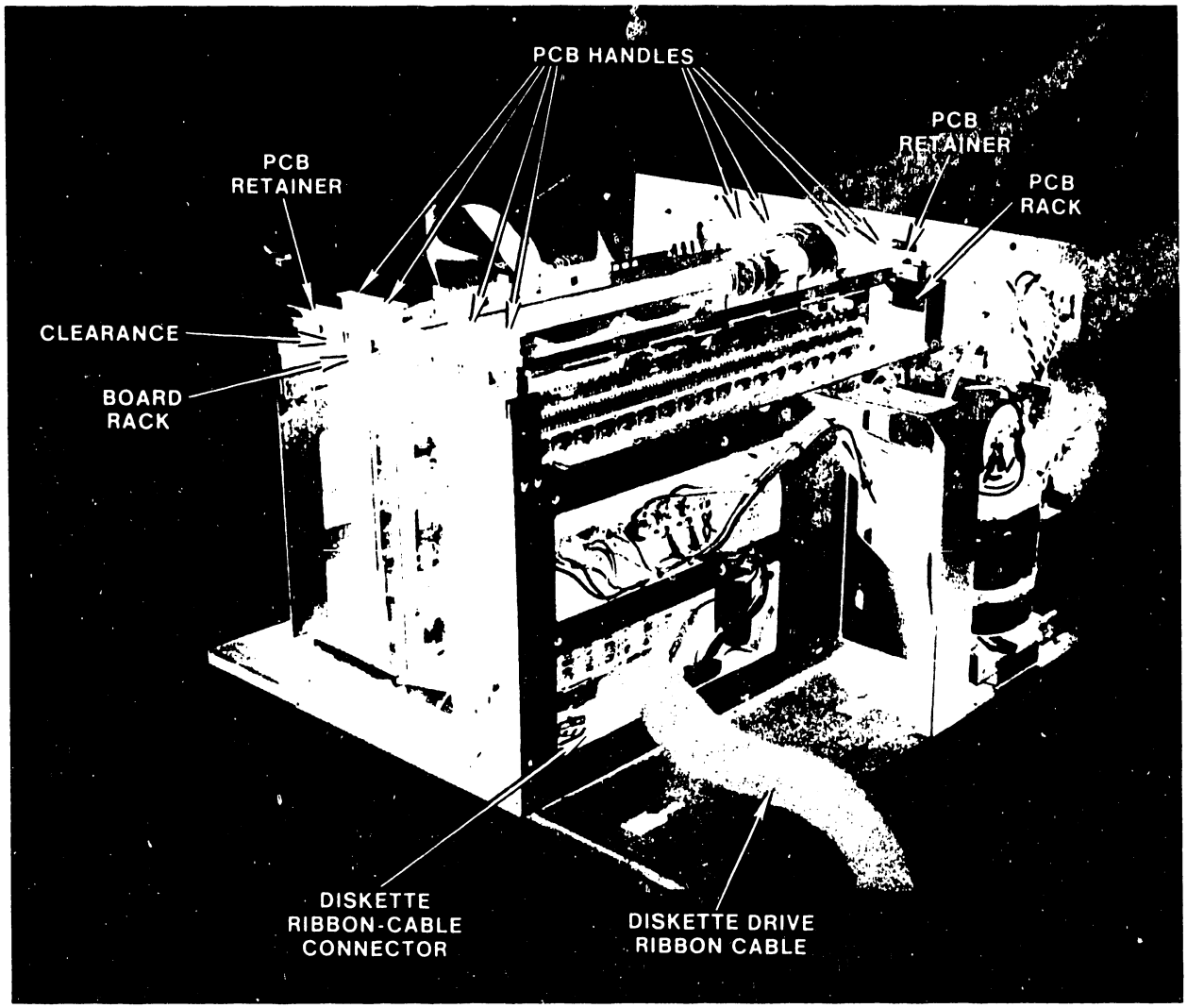

Figure 4-14. PCAs and Connectors

4.12.1.6 Connecting the I/O Channels to the Data-Buffer Board

One or two cables connect the data-buffer board (7504) with the Serial Connector Plate(s) (depending on model). If these cables are not connected when the system is delivered,

A. Connect the ribbon cable from I/O channels 1-8 (closest to the cooling fan) to connector J1 on the 7504-board.
B. If applicable, connect the ribbon cable from I/O channels 9-16 to connector J2.

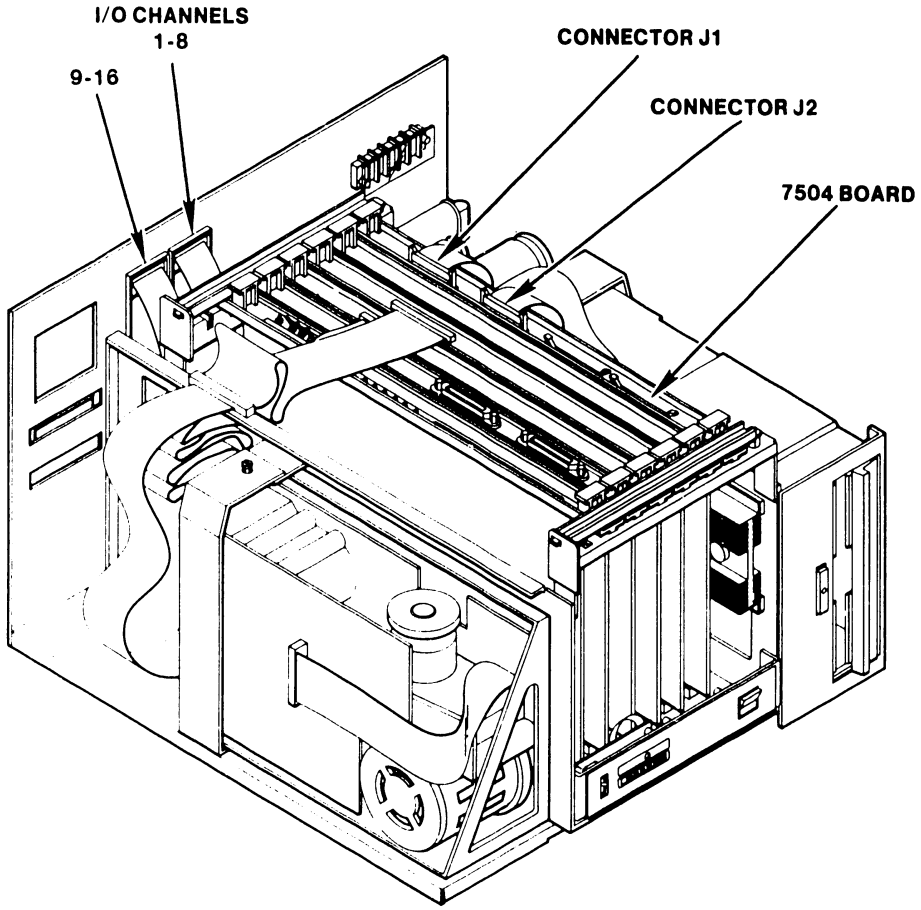

Figure 4-15. Data-Buffer Board Connections

4.12.1.7 Replacing the Diskette-Drive Unit

A. Slide the unit part way onto the bottom pan such that the base-plate guides engage the corresponding slots.

---------- CAUTION ----------
Connect the diskette (floppy) cable such that the cable-connection end of the connector is at the top.

B. Connect the power cord and Diskette (Floppy) Cable at the rear of the diskette-drive unit. The other end of the Floppy Cable should be connected to the motherboard so that the marking on the cable faces the front of the Master Unit.
C. Firmly push the unit into the slots until the hold-down screw and threaded hole are aligned. (The unit may be positioned by aligning the bracket and casting "shoulder" with the finger and thumb.)
D. Tighten the "captured" hold-down screw.
E. Insert the Diskette (Floppy) Cable into its retainer.

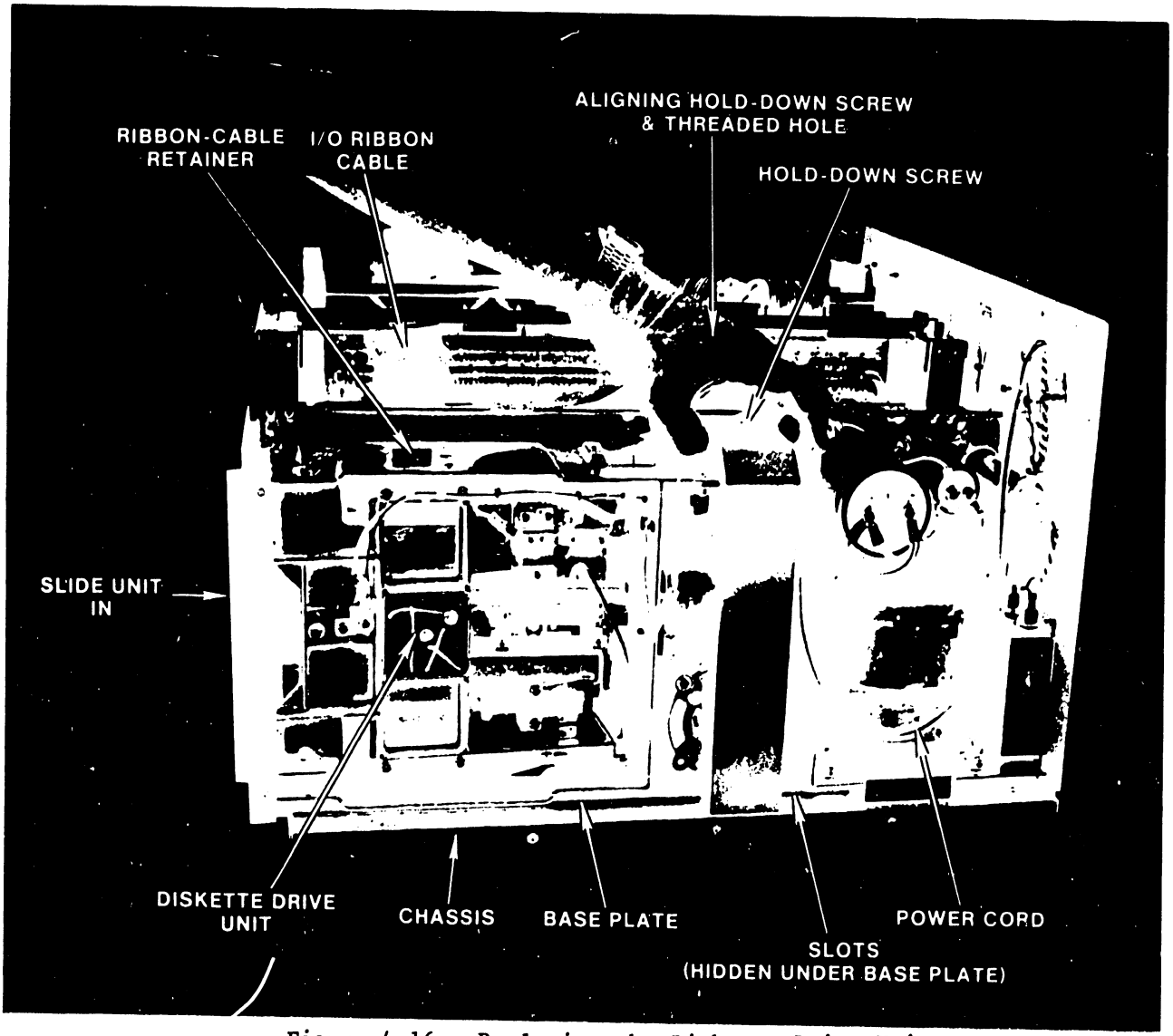

Figure 4-16. Replacing the Diskette-Drive Unit

4.12.1.8 Removing the Winchester Drive Unit

The Winchester drive unit is mounted on a base plate with a guide that fits into a corresponding slot in the Master Processor chassis. The entire unit is secured by a single hold-down screw.

A. Remove the hold-down screw: insert a long-shank screwdriver through the access hole in the power supply bracket to reach the hold-down screw.
B. Disconnect the AC connector, DC connector and the two ribbon cables at the rear of the Winchester drive unit.
C. Slide the Winchester drive unit out by firmly grasping the front of the unit and pulling out.

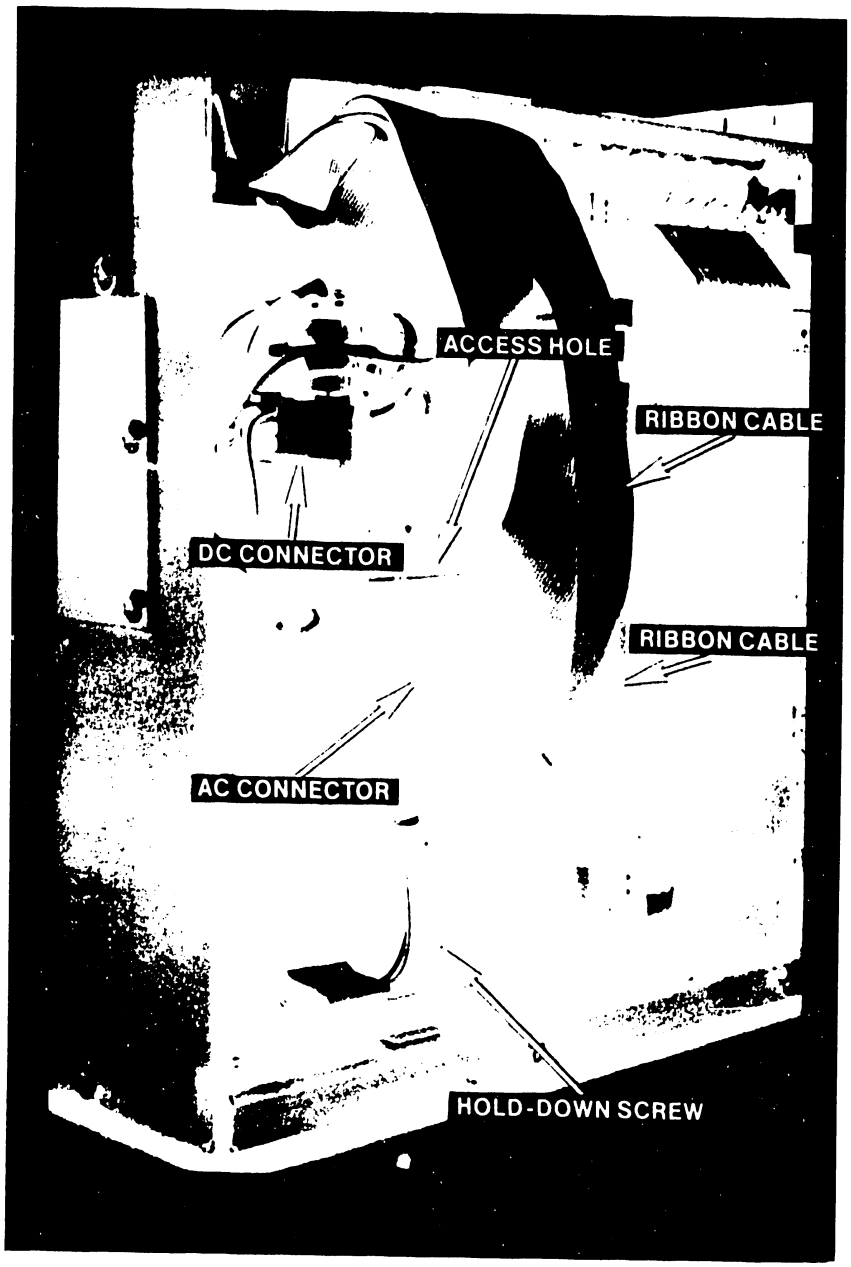

Figure 4-17. Removing the Winchester Drive Unit

4.12.1.9 Winchester Drive Shipping Locks

---CAUTION---

The Winchester drive will be severly damaged if the following procedures are not observed prior to applying system power.

For systems containing Shugart fixed disk drives, the following procedure applies:

A. Remove the spindle lock that prevents the spindle drive motor from rotating.
B. Put the spindle lock together and store as shown below.
C. Remove the caution tag on Master Processor power plug, and keep it by taping to the back of the master unit for future use.

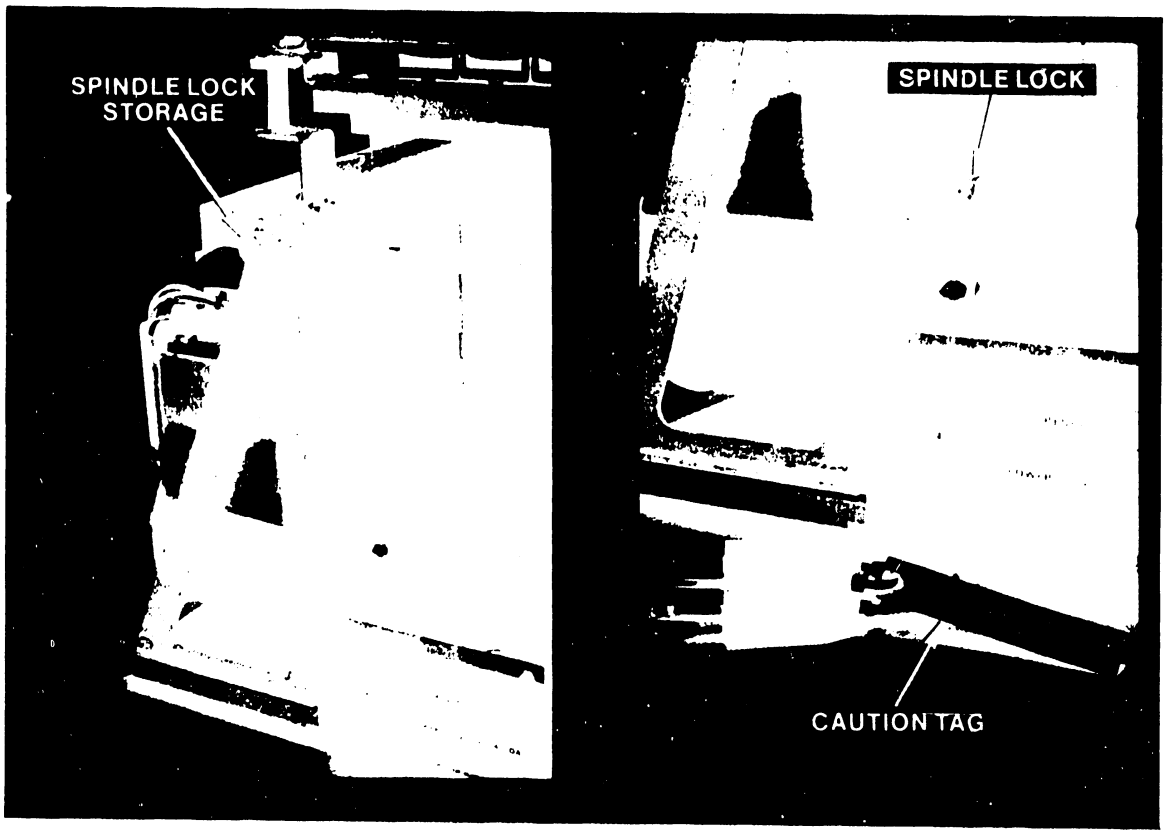

Figure 4-18. Shugart Fixed Drive Spindle Lock

For OIS systems containing Quantum fixed drives, the following procedure applies:

A. To unlock the spindle lock, loosen the 11/32 inch hex nut.
B. Rotate the locking clip away from the pulley. DO NOT ROTATE PULLEY.
C. Retighten 11/32 inch hex nut.
D. Unlock the actuator by rotating the actuator lock counter clockwise as far as it will go (approx. 1/2 turn). The embossed arrow will now point to RUN (see Figure 4-19). DO NOT FORCE.

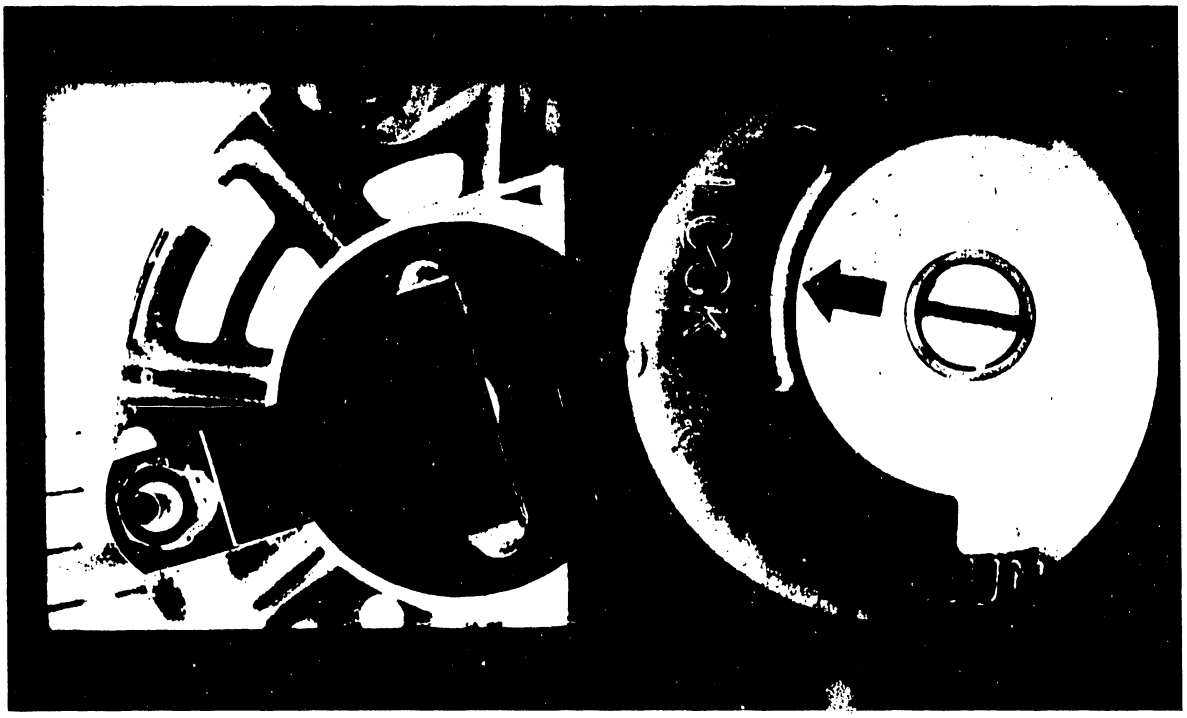

Figure 4-19. Quantum Spindle Lock (left), Actuator lock (right)

4.12.1.10 Replacing the Winchester Drive Unit

A. Slide the Winchester drive unit into the Master Processor chassis until the base-plate guide engages the corresponding slot.

CAUTION

Ensure conductor #1 is connected to pin 1. The ribbon cables have a marked edge (red or blue) denoting conductor #1 for connection to pin 1. The connector face plate also has a " " mark indicating pin 1 for proper connection. When connecting the cables the marked edge of the cable is positioned up and to the front of the unit.

B. Connect the 50-conductor ribbon cable between J1 on the Winchester drive unit and J1 on the 7950 board. Note that J1 on the Winchester drive unit is a keyed connector.

C. Connect the 20-conductor ribbon cable between J2 on the Winchester drive unit and J1 on the 7653 board. Note that J2 on the Winchester drive unit is a keyed connector.

D. Connect the 6-pin Mate N-Lok DC power connector J3 to the Winchester drive power supply.

E. Connect the 3-pin AC power connector J4 to the Winchester drive unit.

F. Insert and tighten the hold-down screw.

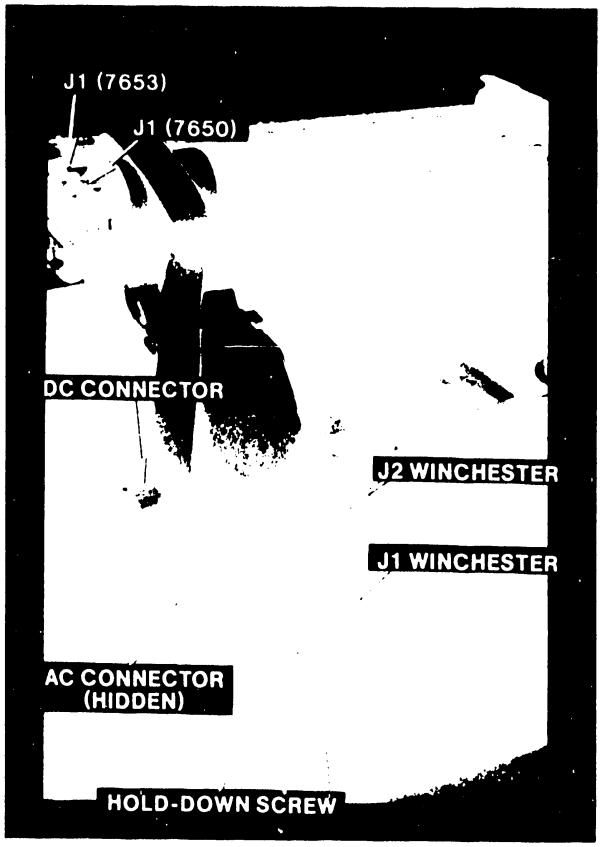

Figure 4-20. Replacing the Winchester Drive Unit

4.12.1.11 Mailing the Shipping Card and Reporting Damage

A. Fill out the shipping card enclosed with each piece of equipment.
B. Ensure that the card is signed and mailed.
C. If damage is noted, promptly file a claim with the carrier involved.
D. Note the nature and extent of damage, and notify

WLI Distribution Center (Dept. #90)
Quality Assurance Dept.
Tewksbury, MA 01876.

E. If necessary, arrange for equipment replacement.

4.12.2 Cabling

4.12.2.1 Inspecting the Hawk Ribbon Cables

Flat, 50-conductor, shielded ribbon cable connects the Master Processor with the Hawk disk unit(s) in OIS 125A and 130A-E type systems. This cable is shipped with the system in its own container. Inspect the cable before further assembly.

A. Ensure that the proper cables have been received:
   1. WLI #220-0236 for a system with only one Hawk disk unit.
   2. WLI #220-0169-1 and WLI #220-0187-1 for a system with two Hawks. Cable WLI #220-0169-1 connects the Master Processor to the system disk unit; WLI #220-0187-1 "daisy chains" the optional Hawk.

---------- NOTE ----------
Verify the cables connecting the Master Processor by the terminating PCAs: Cable 220-0236 with PCA 7680,
Cable 220-0169-1 with PCA 7481 (R1).
These cables are often unmarked and could become mixed.

B. Ensure that approximately 2 feet of cable (the Master Processor end) are unshielded and unjacketed.
C. Ensure that approximately 2 inches of shield are exposed on each end of the cable.

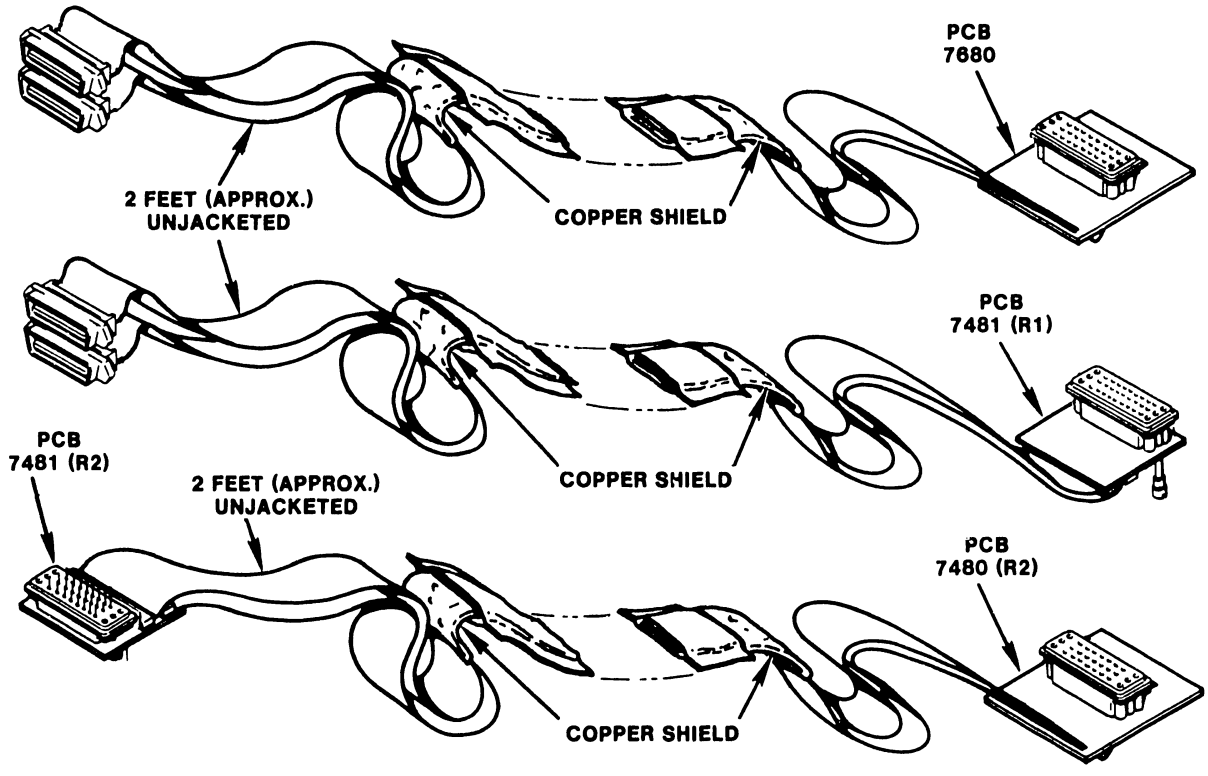

Figure 4-21. Ribbon Cables

4.12.2.2 Installing Master-Processor Cable Clamp

The ribbon cable connecting the Master Processor and Hawk disk unit is copper clad for good shielding. To ensure proper contact, install the cable clamp at the Master Processor as follows:

A. Remove the cable clamp from the Master-Processor rear panel and separate the two halves of the clamp.
B. Insert the grounding clip (only) between the copper shield and the outer jacket.
C. Push the upper half of the clamp onto the cable; fully inserting the grounding clip.
D. Install the lower half of the clamp in the same manner.

---------- CAUTION ----------
Do not overtighten the screws which secure the two halves of the clamp: doing so could damage the cable.

E. Assemble and secure the two halves of the clamp: tighten the two screws evenly, ensuring that the copper shield remains in good contact with both grounding clips.

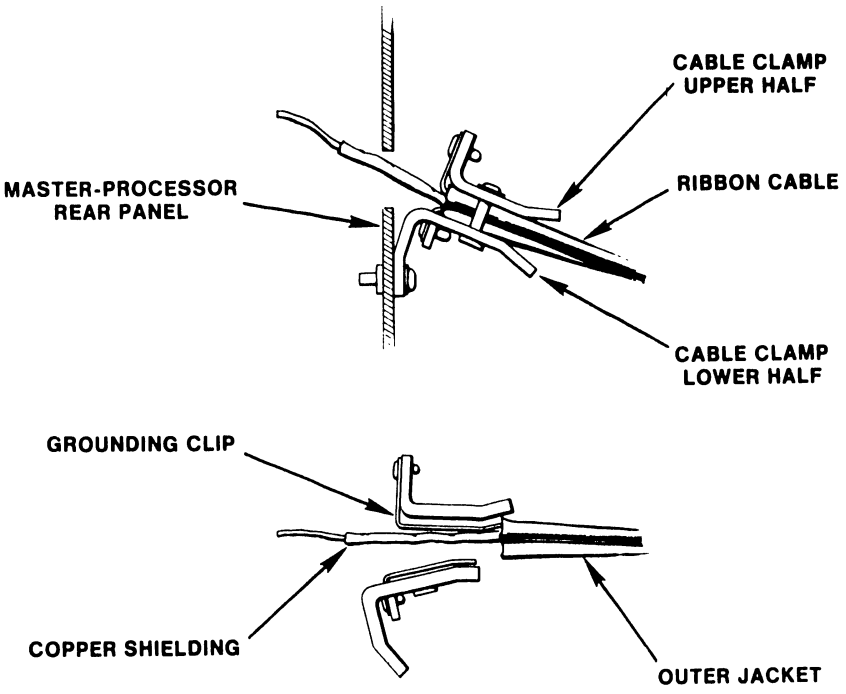

Figure 4-22. Installing Master-Processor Cable Clamp

4.12.2.3 Connecting the Ribbon Cable to the Master Processor

For OIS 125A and 130A-E type systems, the Hawk cable connectors 1 and 2 are to be connected to the 7502-board (10 MEG/ FLOPPY CNTRL).

A. Insert the connectors (to the Master Processor) and about 2 feet of the cable through the rear panel and into the Master Processor.
B. Reattach and secure the cable clamp to the rear panel.
C. Attach cable connectors 1 and 2 to connectors J1 and J2, respectively, on the 7502-board. Tighten the securing screws.

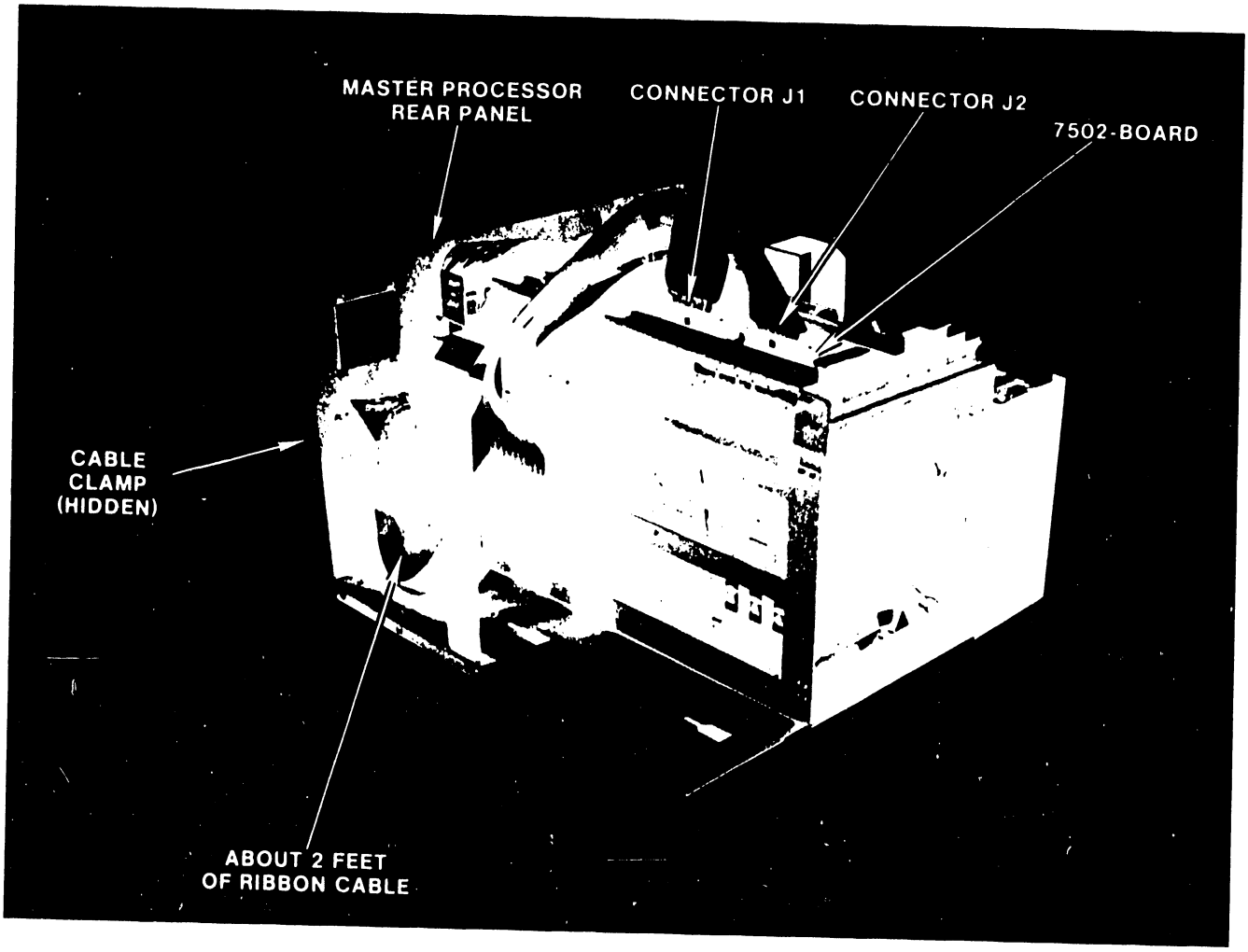

Figure 4-23. Ribbon-Cable Connections

4.12.2.4 Grounding the Ribbon Cable at the Hawk Disk Unit

For OIS 125A and 130A-E systems, the ribbon cable is also connected to the Hawk disk unit. The connection is made at the rear of the unit. Before making the connection, the shield on the ribbon cable must also be grounded to this unit.

A. Tilt the top cover forward to access the I/O board at the rear of the unit.
B. Feed the cable under the cable clamp, located just below the I/O board.
C. Ensure that the bare shield is in contact with the clamp.
D. Tighten the screws evenly: ensuring good electrical contact between the clamp and copper shield.

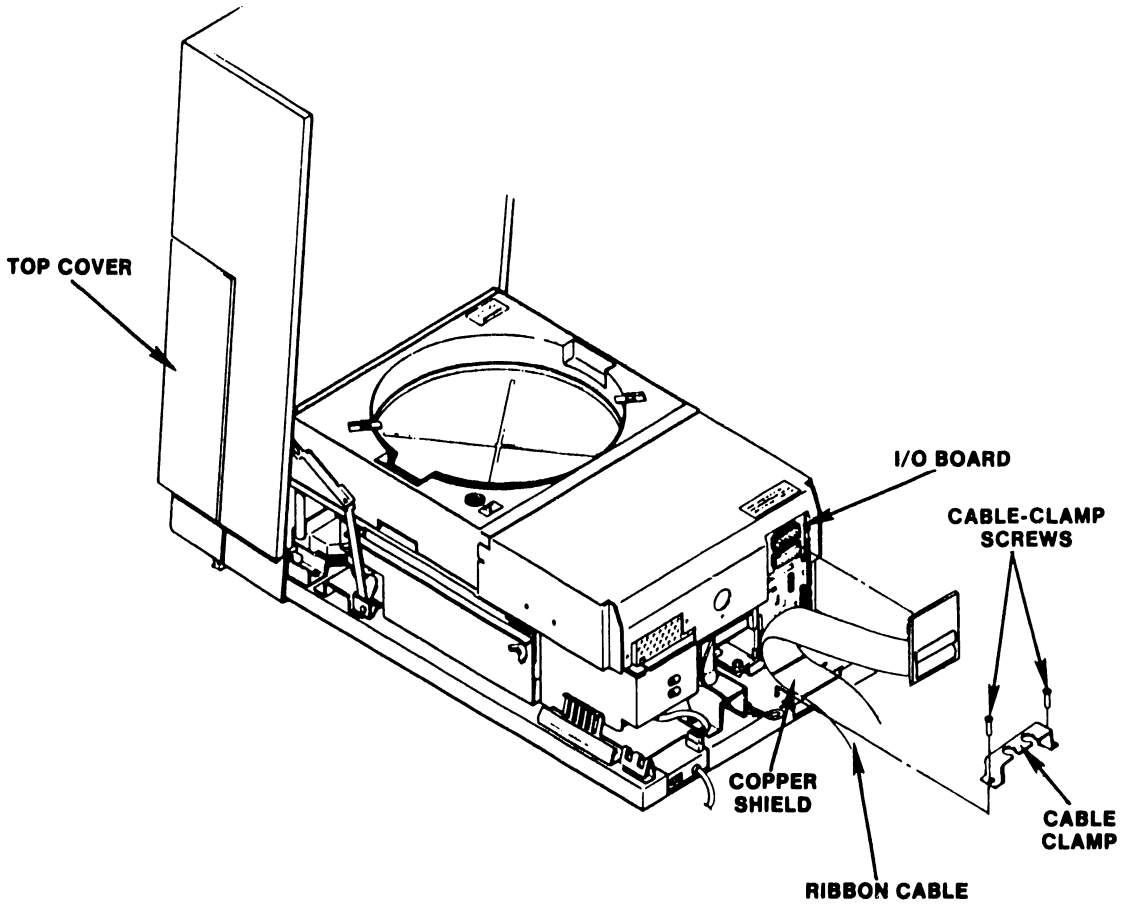

Figure 4-24. Grounding the Ribbon Cable

4.12.2.5 Connecting the Ribbon Cable to the Hawk Disk Unit

The connecting cables are plugged into the Winchester I/O-board at the rear of the Hawk unit. The "daisy chain" connection (properly grounded at both disk units) is also made at this I/O-board.

A. Plug the ribbon cable from the Master Processor into the upper (male) connector on the Winchester I/O board. If there is only one HAWK in the system configuration, this ribbon cable should include a terminator at its connector (220-0236).
B. If a second HAWK is to be included in the system, plug the 'daisy chain' ribbon cable (220-0187-1) into the lower (female) connector on the Winchester I/O board. The other end of the 'daisy chain' cable should include a terminator and be connected to the upper (male) connector of the 'downstream'* HAWK.
C. Turn down the securing screws on the connector by an equal amount.

* Downstream HAWK is unit furthest from Master Processor in daisy chain.

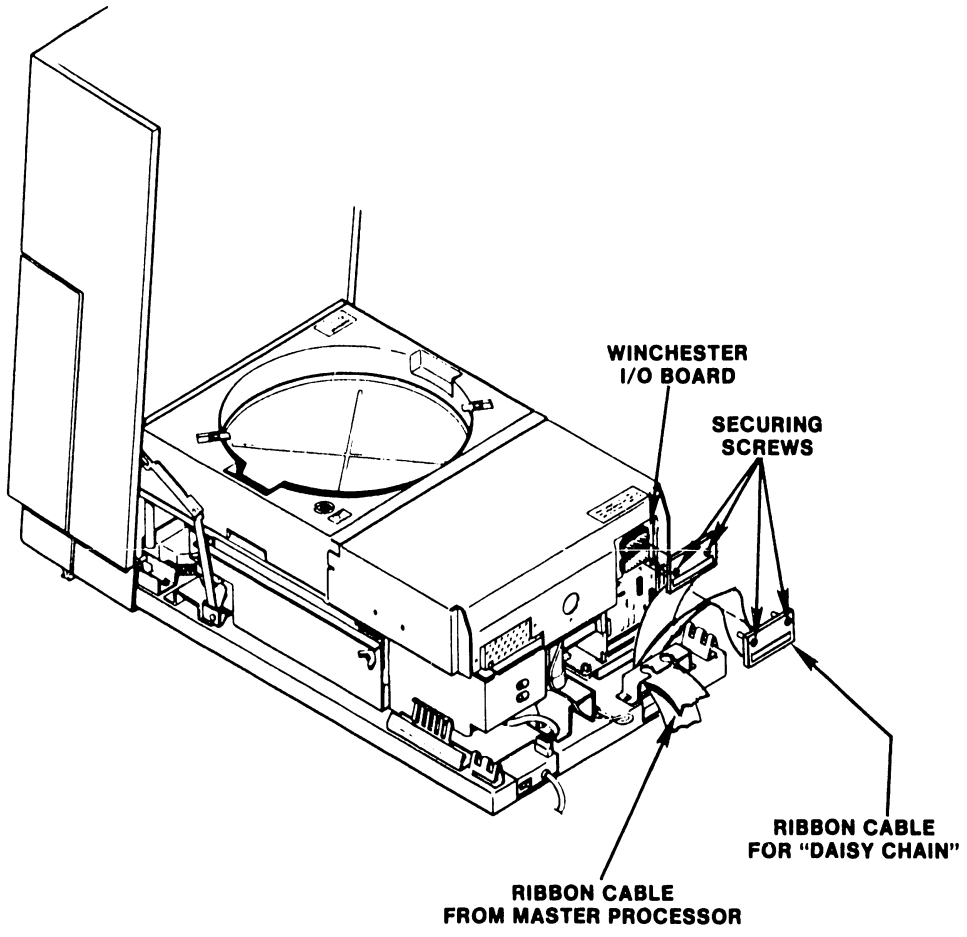

Figure 4-25. Connecting the Hawk Disk Unit

4.12.2.6 Setting the Winchester I/O-Board Switches (Hawk disk unit)

Switch-settings 1-4 on switches S1 and S2 determine the drive identification; switch-setting 1 identifies drive number 1, and switch-setting 2 identifies drive number 2. The system drive will always be unit number 1; an optional second drive will be unit number 2.

A. Select the disk unit which is to be the system disk.
B. Position switch-setting 1 on both S1 and S2 to ON.
C. Position switch-settings 2 ,3, and 4 on both S1 and S2 to OFF.
D. Position the remaining switch settings on the I/O board to correspond with the diagram below.
E. If applicable, select the optional disk unit.
B. Position switch-setting 2 on both S1 and S2 to ON.
C. Position switch-settings 1 ,3, and 4 on both S1 and S2 to OFF.
D. Position the remaining switch settings on the I/O board to correspond with the diagram below.

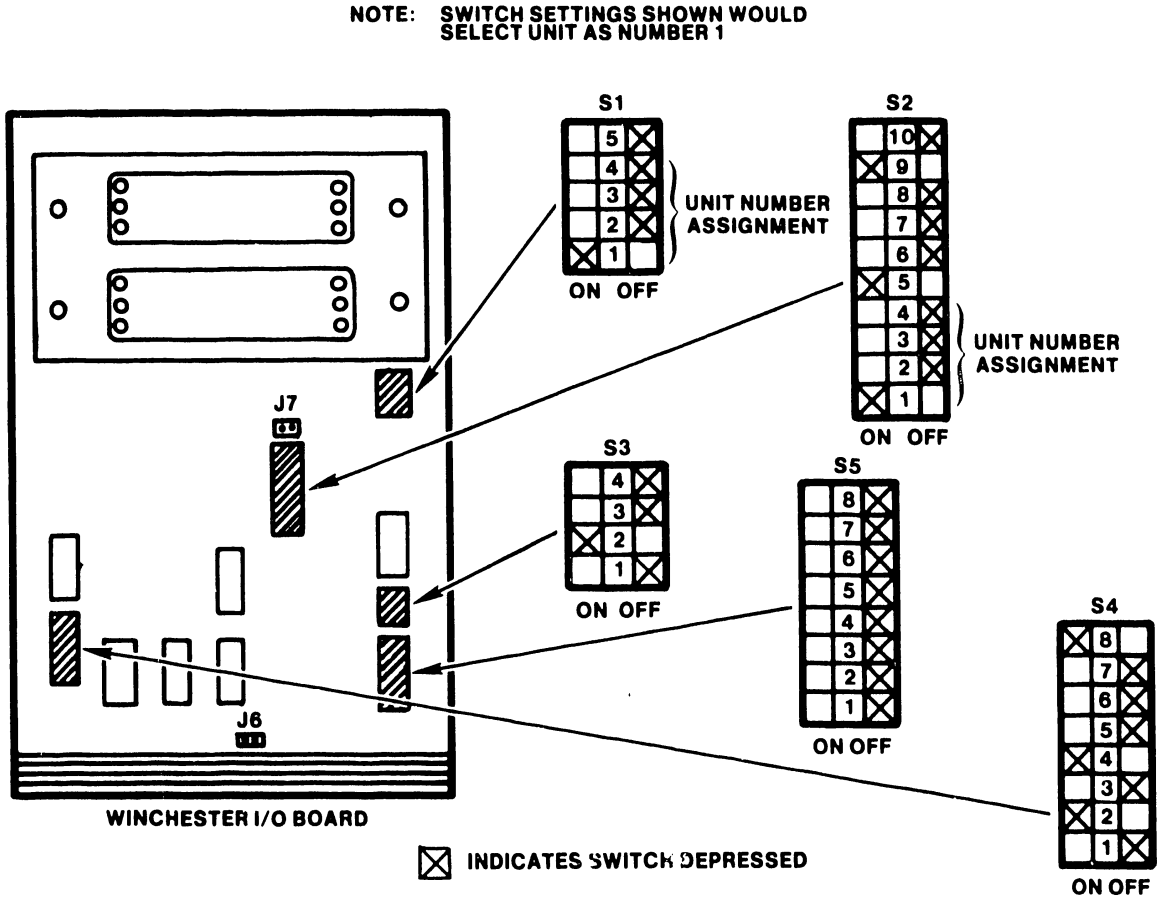

Figure 4-26. Winchester I/O-Board Switches (Hawk disk unit)

4.12.2.7 Connecting the CRT Workstation to the Master Processor

Dual coaxial cables (up to 2000 feet) connect the CRT workstation (and other devices) to the Master Processor.

A. Number the dual coaxial cables at both ends to aide correct device numbering: Ty-wrap Ident Markers (WLI #605-1011) are suggested.
B. The CRT workstation closest to the Master Processor is to be connected at I/O-channel number 1; thereby facilitating use of the Master Diagnostics Monitor and the Password Displayer diskettes.
C. Connect the dual coaxial cable at the CRT workstation and at the I/O ports on the rear panel of the Master Processor.

---------- NOTE ----------
When installing a system, ensure good coaxial cabling:
1. Connect all cables to the Master Processor.
2. Verify that the resistance between the connector bodies is less than 0.0 ± .005 ohms.
3. Verify that all cables meet a pull test of 35 lbs.
4. Power-on the Master Processor.
5. Verify the following voltage measurements from center conductor to connector body.
   TNC: +3.0 Vdc, or greater
   BNC: +0.1 Vdc, approximately.

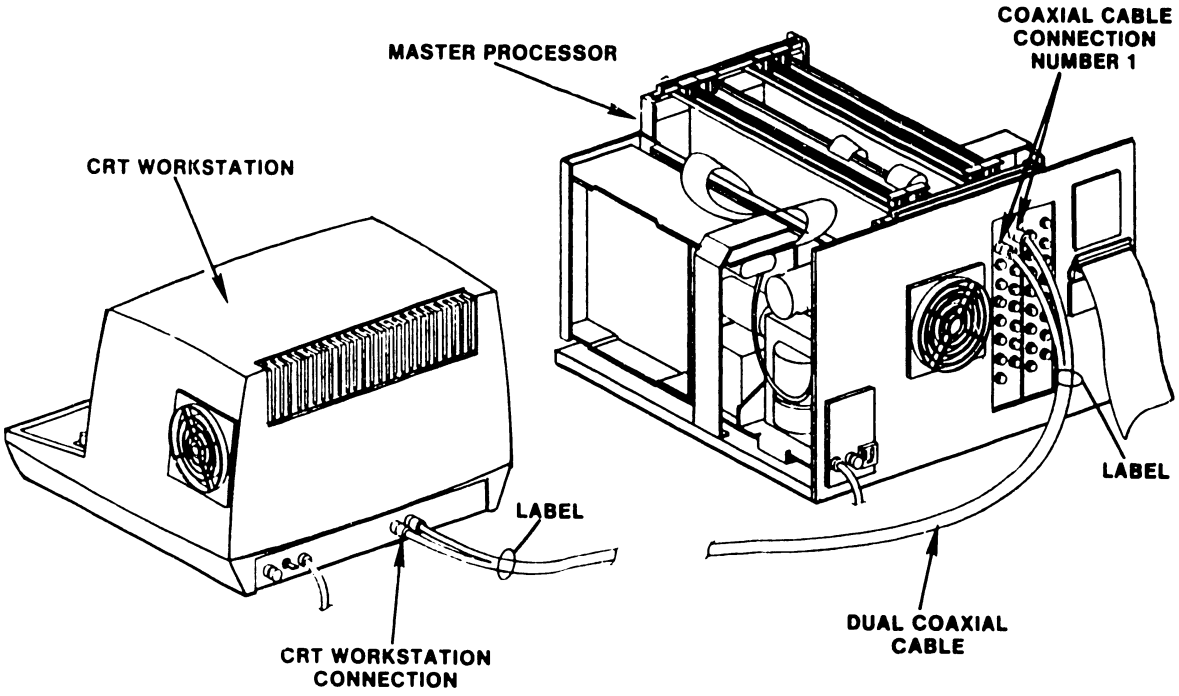

Figure 4-27. Connecting the CRT Workstation

4.12.3 Initial Checks and Adjustments for the Master Processor

4.12.3.1 Checking the Board E-Revision Levels

The E-revision level is noted on a sticker affixed to the non-component side of each board. Note that occasionally the E-revision level is only scratched into the board in the square where the sticker should be affixed.

A. Remove the PCA retainers.
B. Remove the PCAs by pulling up on the board handles.
B. Verify that the board E-revision levels are at or above those listed in Table 4-3.

TABLE 4-3 E-REVISION LEVELS

BOARD		REVISION	BOARD		REVISION
7501-D	CPU & MEMORY	3	7950	WINCH. "A" CNTRLLR	3
7502	10 MEG/FLOPPY CNTRLLR	4	7653-A	WINCH. "B" CNTRLLR	11
7503	DATA LINK CNTRLLR	9	7887	REGULATOR	7
7504	DATA BUFFER	1	7649	MOTHERBOARD	0

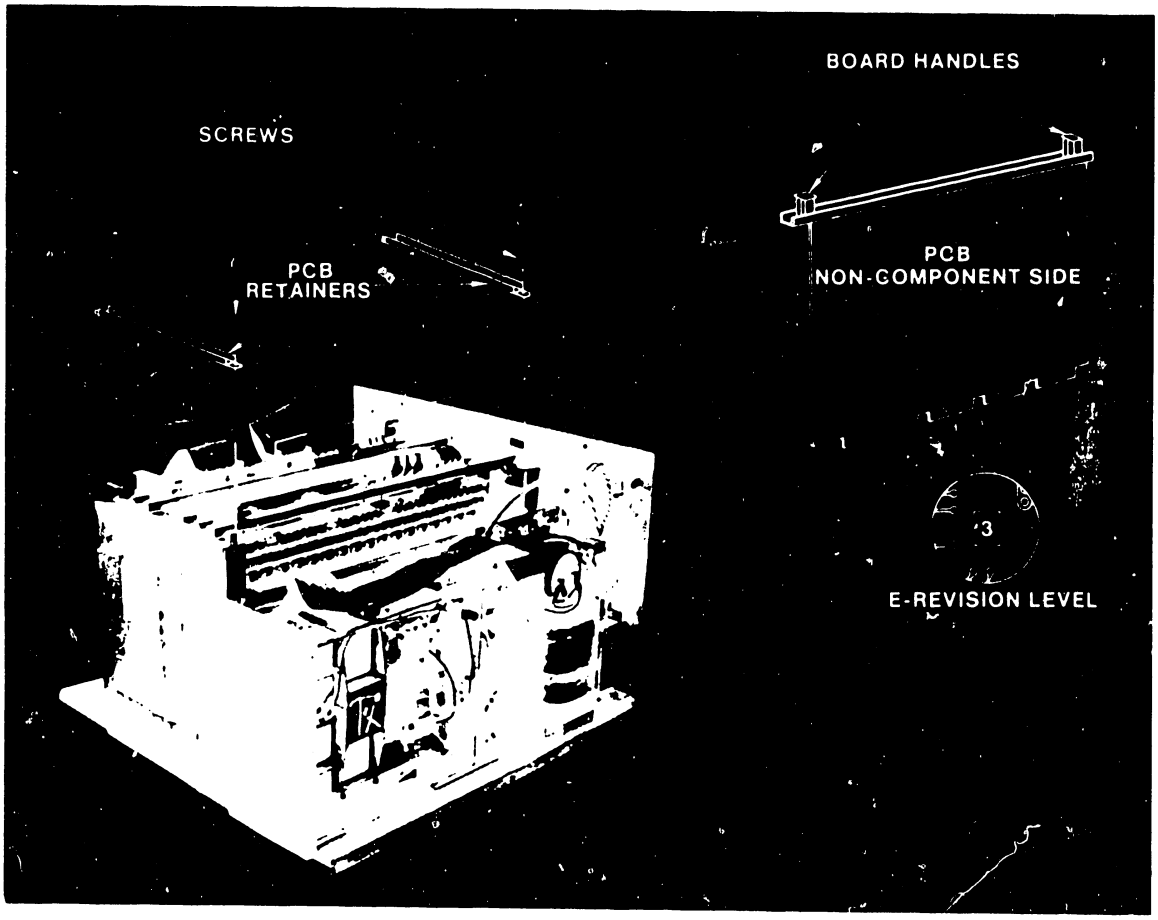

Figure 4-28. E-Revision Levels

4.12.3.2 Setting the Switches

Internal switches comprise the voltage-selector switch and those on the CPU/MEM and 7653 boards.

A. Verify that the voltage-selector switch has been set correctly. (See paragraph 4.12.1.4)
B. Position all diagnostic switches OFF (toward component side of board).
C. On the CPU/MEM board, position all switches of DIP switch SW1 to OFF.
D. On the CPU/MEM board, configure DIP switch SW2 as follows:

switch 1	ON for OIS 125A, OFF otherwise
switch 3	ON if BASIC selected, OFF otherwise
switches 2,4,5,6,7,8	All OFF

E. On the 7653 board, configure the DIP switch as shown in Figure 4-30.

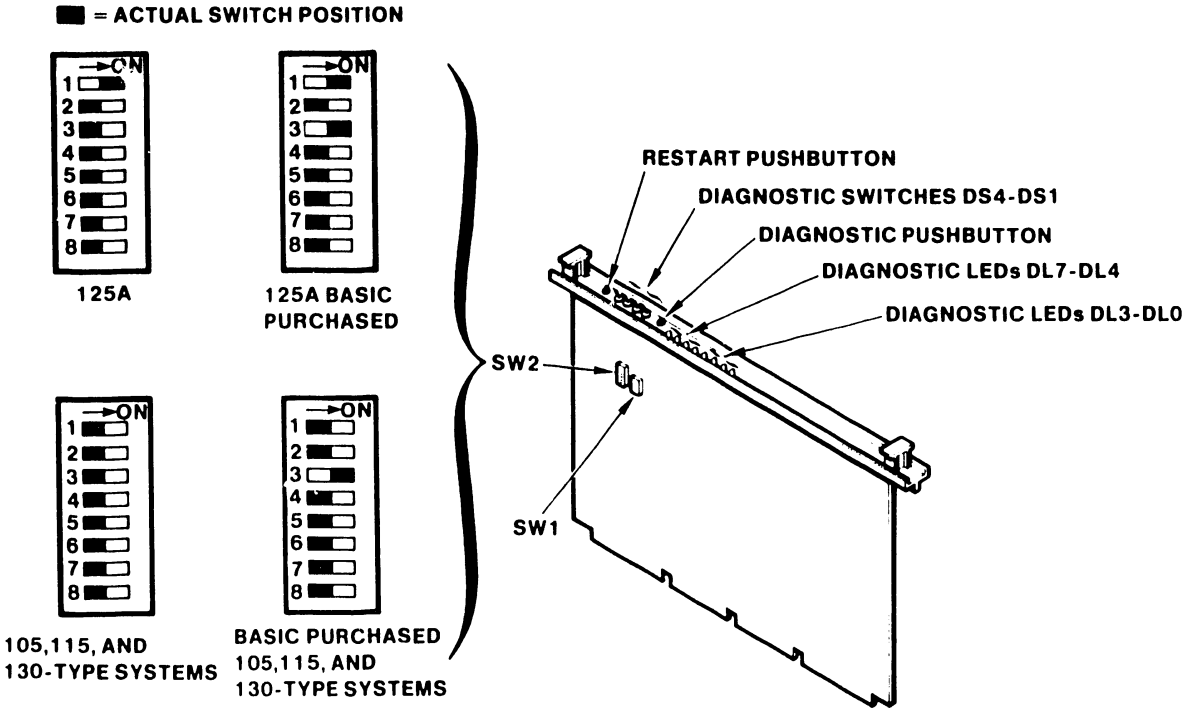

Figure 4-29. CPU/MEM Board Switch Configurations

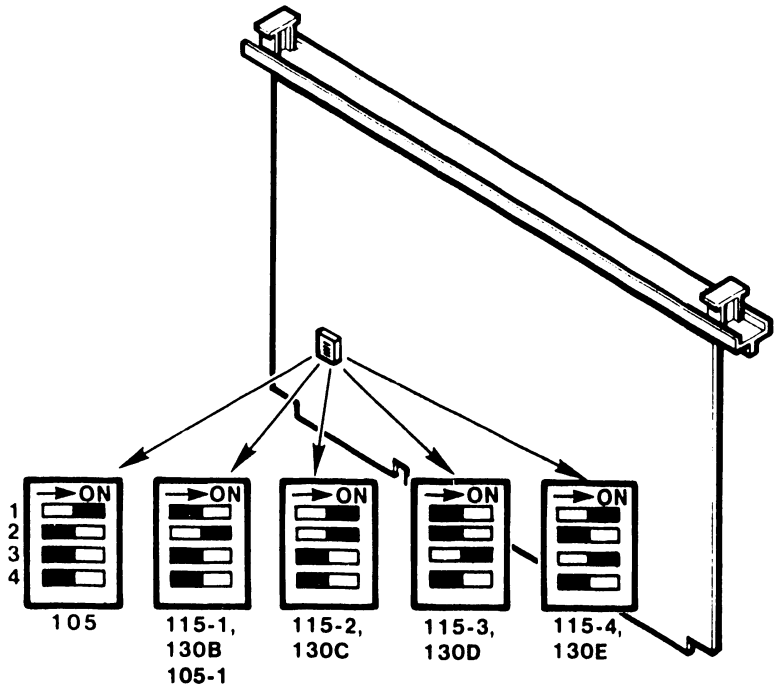

Figure 4-30. Switch Configurations for Winchester "B" Controller Board

4.12.3.3 Adjusting Voltages on the CPU/MEM Board

The measurement test points are located on the CPU/MEMORY Board. The adjusting potentiometers are on the 7887-board (Regulator).

---------- CAUTION ----------
Avoid touching bare leads and causing a sort circuit: very little clearance is provided for these adjustments. Use the small slotted screwdriver with insulated shaft (WL #726-9406) for these voltage adjustments.
All PCAs must be inserted and the system drive connected and powered-on for these adjustments
---

A. Use a DVM (Digital Voltmeter) for all voltage measurements.
B. Position the power switch to 1 (ON).
C. Measure the DC voltages at the test points on the CPU/MEM board, using GND as reference.
D. If necessary, adjust the potentiometers on the 7887-board to bring the DC voltages within limits (Table 4-4).
E. The -12 volts cannot be adjusted: replace the 7887-board (Regulator) if this voltage is less than -15.0 Vdc or greater than -9.0 Vdc.

TABLE 4-4 DC VOLTAGE ADJUSTMENTS

Test Point	Limits(VDC)		Adjustment	Test Point	Limits(VDC)		Adjustment
+24	+23.5	+24.5	pot.	-5	-4.9	-5.1	pot.
-12	-15.0	-9.0	none	$+5V_1$	+4.9	+5.1	pot. **
+12	+11.75	+12.25	pot.	$+5V_2$	+4.9	+5.1	

** $5V_1$ and $5V_2$ are the same supply and are adjusted by the same pot.

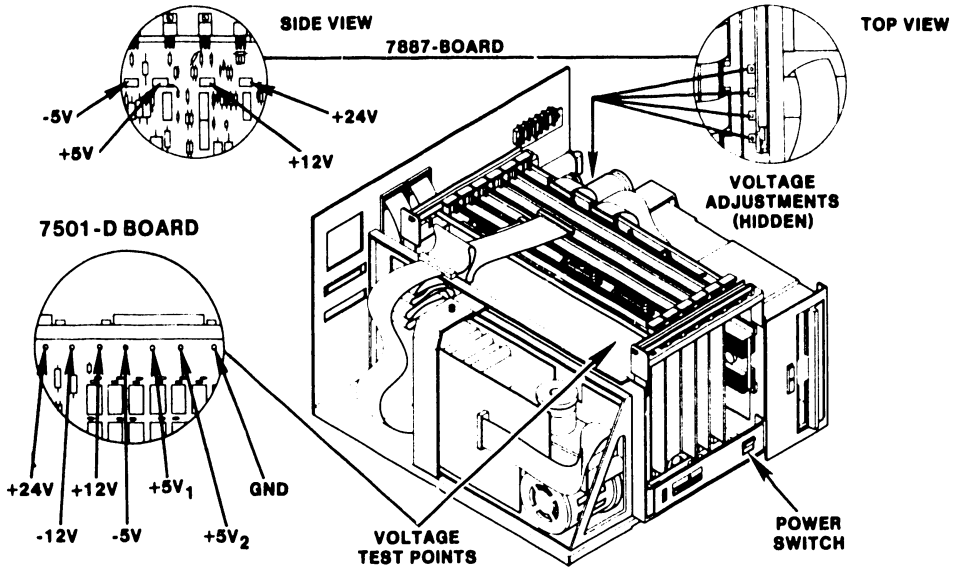

Figure 4-31. Voltage Adjustments

4.12.3.4 Testing the Diagnostic LEDs

A. Press and hold the Diagnostic Pushbutton on the CPU/MEM board.
B. While continuing to press the Diagnostic Pushbutton, press then release RESET on the front panel of the Master Processor.
C. Pressing both pushbuttons in this sequence lights all diagnostic LEDs, both on the CPU/MEM board and on the Front Panel.
D. Replace the CPU/MEM board and/or the front panel on which any LED fails to light.

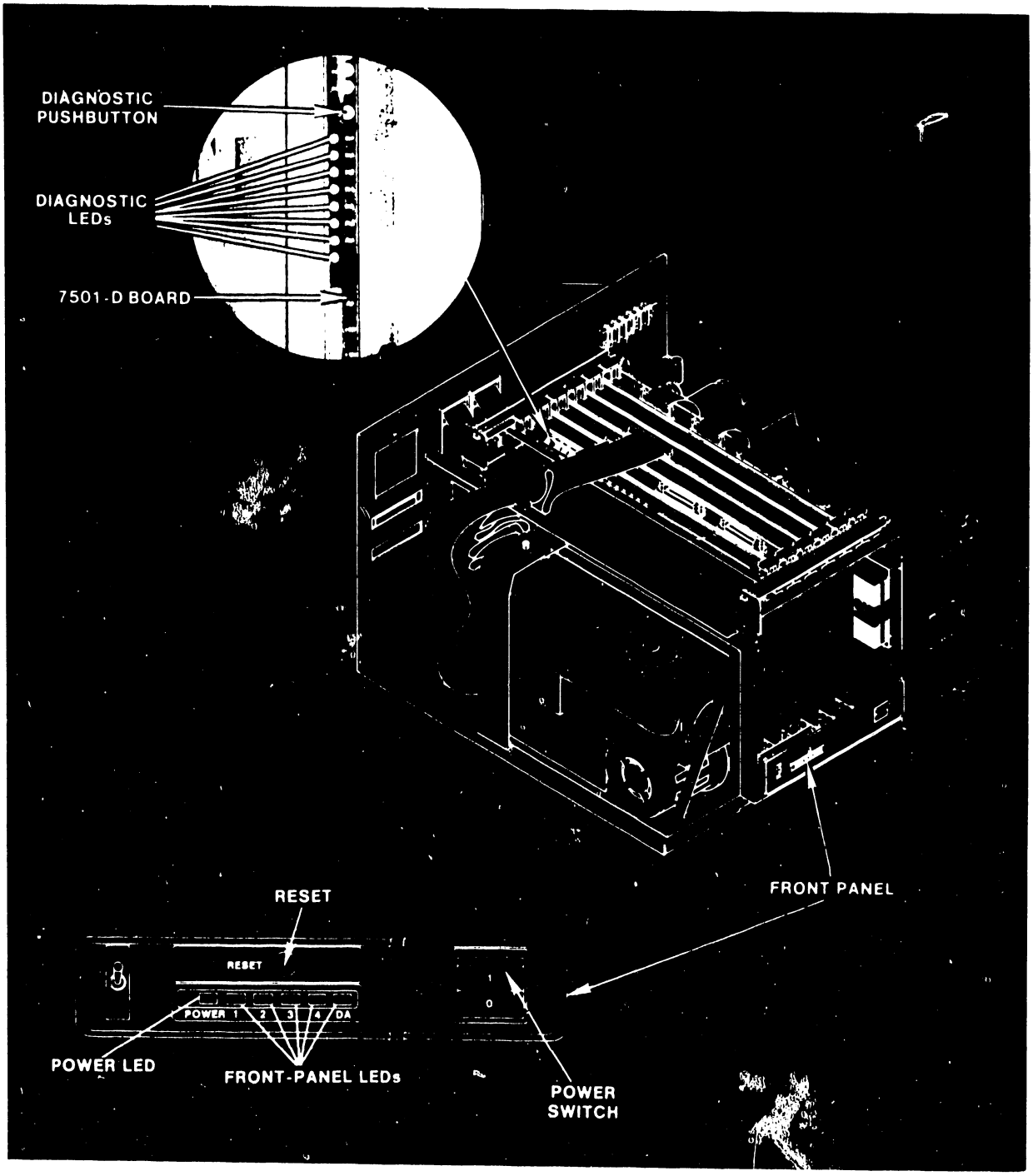

Figure 4-32. Testing the Diagnostic LEDs

4.12.3.5 Aligning the Diskette Drive Unit

The diskette-drive alignment procedures for 140 class systems are set forth in WPNL No. 21, Shugart SA901 Diskette Drive Head Alignnment Procedure, (729-0113).

In lieu of this alignment procedure, at least verify that the diskette drive is properly aligned. A suggested procedure follows:

A. Secure a known good diskette.
B. Access Word Processing.
C. Access Utilities.
D. Select and execute Duplicate Disk.
E. Verify that the diskette was read for duplication without error, or any re-tries.
F. If any re-tries, or errors, were noted, replace the diskette drive.

4.12.3.6 Replacing the Top Cover

The top cover slides onto the Master Processor and is secured by eight Phillips screws; three at each side and two at the rear.

A. Set the top cover over the front of the Master Processor and slide fully to the rear.
B. Insert and start the two Phillips screws at the rear panel: do not tighten.
C. Insert and start the six Phillips screws (three each side) at the sides of the top cover.
D. Tighten all screws.

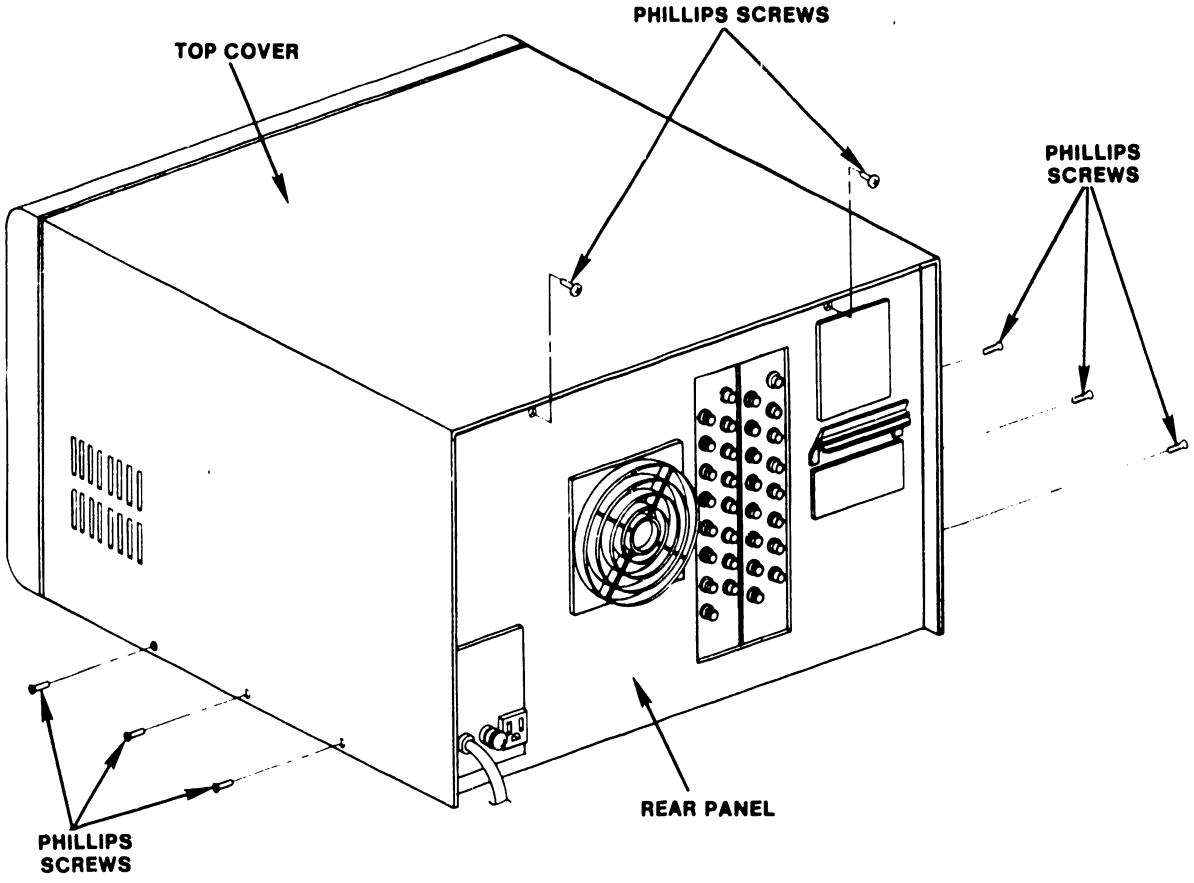

Figure 4-33. Top-Cover Replacement

CHAPTER 5

PREVENTIVE AND CORRECTIVE MAINTENANCE

CHAPTER 5

PREVENTIVE AND CORRECTIVE MAINTENANCE

5.1 GENERAL

This chapter contains a preventive maintenance schedule along with required materials and detailed maintenance procedures for the OIS 105/115/125A/130A-E Master Unit. Proper and timely implementation of the information contained in this chapter is necessary to ensure maximum operating efficiency of these systems.

Preventive maintenance procedures for the Hawk disk drive and CRT workstations do not fall within the scope of this manual. PM schedules and procedures for these peripheral devices may be found in the following documents:

A. HAWK DRIVE: PM schedules and procedures for the HAWK drive are found in section 4 of the Wang/CDC HAWK Disk Drive Manual (729-0181).

B. CRT/WORKSTATION: (5536-2,-3,-4) For information on maintenance procedures for the CRT workstation consult section 5 of Model 5536 Series Workstation PMM (729-0522A).

This chapter also provides the information necessary to remove and replace OIS 105/115/125A/130A-E parts and assemblies. In general, most parts and assemblies are accessed with the top cover of the Master Processor removed. Thus, the top cover removal/replacement procedure is provided first and is referenced by most of the following repair procedures.

5.2 PREVENTIVE MAINTENANCE

5.2.1 Materials Required

Materials required to perform a thorough and efficient job of preventive maintenance on OIS Systems include:

1. Cleaning agents for use on the system cabinetry and special cleaning agents for use on heads, contacts, etc.
2. Dusting tools and aids such as assorted brushes, swabs, a vacuum, and aerosol can filled with compressed air.
3. Materials for cleaning electrical contacts.
4. Touchup paints.
5. CE tool kit.
6. Oscilloscope.
7. Diagnostics -- OIS 140-Class Power Up (PROM) (702-0042)
   OIS 140 Extended Memory Power Up (PROM) (702-0123)
   SYSEX15 (702-0127)
   OIS 140-Class Master Monitor (702-0057)
   OIS Online Device Monitor (702-0174)
   OIS Online Printer Part I (702-0176)
   OIS Online Printer Part II (702-0149)

8. Manuals -- OIS 105/115/125A/130A-E Systems PMM (729-0886A),
Wang/CDC HAWK Disk Drive Manual (729-0181),
CDC Hawk Field Maintenance Manual (729-0884)
Word Processing Newsletter No. 81 (729-0522)

5.2.2 PM Schedules for the Master Processor

ACTION / FREQUENCY	WEEKLY	6 MONTHS	12 MONTHS	SECTION
Equipment operational check (IPL)	X			5.2.3.1
Clean exterior		X		5.2.3.2
Clean interior		X		5.2.3.2
Inspect		X		5.2.3.3
Align/Adjust		X		5.2.3.4
Diagnostic check		X		
Clean contacts and connectors			X	5.2.3.2
Apply ECN's			X	
Replace parts			X	
Repair scratches and blemishes			X	

5.2.3 Detailed Procedures

5.2.3.1 Equipment Operational Check

It is recommended that the customer perform an equipment operational test at least once weekly. This test constitutes running the Power-Up Diagnostic and checking the front panel Diagnostic LEDs for possible error codes. The test takes approximately 15 seconds to complete and is activated when the customer re-IPL's the system.

5.2.3.2 Cleaning

A. Exterior:

1. Remove excess dust and debris from exterior with cloth and vacuum.
2. Apply general cleaning agent to soft cloth or towel and wipe case clean.

B. Interior:

1. Remove top cover, dust, then vacuum dust and debris from interior.
2. Clean fan blades with cloth and cleaning agent.

C. Contacts and Connectors:

1. Remove all PCB assemblies and clean contacts if necessary, also brush and vacuum dust accumulated on PCBs.
2. Clean PCB and I/O cable connectors.

D. Shugart Floppy:

1. Using brush and vacuum cleaner, remove dust and debris from drive.
2. Inspect the head load pad and head for dirt and/or damage. The head should be cleaned if it has an oxide build-up that is visible to the naked eye. Cleaning methods and materials other than those listed can permanently damage the head and should be avoided.

   a. Lightly dampen a piece of clean, lintless tissue with isopropyl alcohol (use sparingly).
   b. Lift the load arm off the head, being careful not to touch the load button (see Fig. 5-1). Note: Do not bend back the head load arm more than 90°.
   c. Gently wipe the head with the moistened portion of the tissue.
   d. After the alcohol has evaporated, gently polish the head with a clean, dry piece of lintless tissue.
   e. Carefully lower the load arm onto the head. DO NOT let it snap back.

5.2.3.3 Inspection

A. Inspect for loose, missing, or damaged parts.

1. Replace, if part on hand.
2. Order for next PM, or call.

B. Check PCB E-Rev, and PROM Rev levels.

1. Update, if parts available.
2. Order parts for update on next PM, or call.

C. Check PCB and I/O cable security.

D. Clean and check fan operation.

E. Inspect covers for scratches or blemishes.

F. Check controller address switch setting for correctness.

G. Inspect the Shugart floppy disk drive as follows:

1. Check for and correct any loose connections.

2. Check for excessive noise from spindle or head movement motors.

3. Inspect drive belt for worn, frayed, or weak spots.

   NOTE: Hands and fingers should be clean, free of oil and grease when handling drive.

4. Check spindle lock nut for tightness. Do not take apart spindle and lubricate it.

5.2.3.4 Alignments/Adjustments

A. Mechanical: None required.

B. Voltage:

Adjust voltages per section 4.12.3.3 and Figure 4-31, using test points located on CPU/MEM board and adjusting potentiometers located on the Power Supply Regulator board.

----------CAUTION----------

Avoid touching bare leads and causing a short circuit: very little clearance is provided for these adjustments. If possible, insulate the shank of the adjusting screwdriver or use an insulated alignment tool. All PCBs must be inserted and the system drive connected for these adjustments.

C. Shugart Floppy:

Check and/or replace worn read/write head load pad buttons to prevent excessive wear on the diskette (see Fig. 5-1).

1. To remove the button, hold the load arm out away from the head (not more than 90°), squeeze the locking tabs together with a pair of needle-nosed pliers and press forward.
2. To install the button, press the button into the head load arm and it will snap into place.
3. Check integrity of floppy door and door locking mechanism. Adjust as necessary.

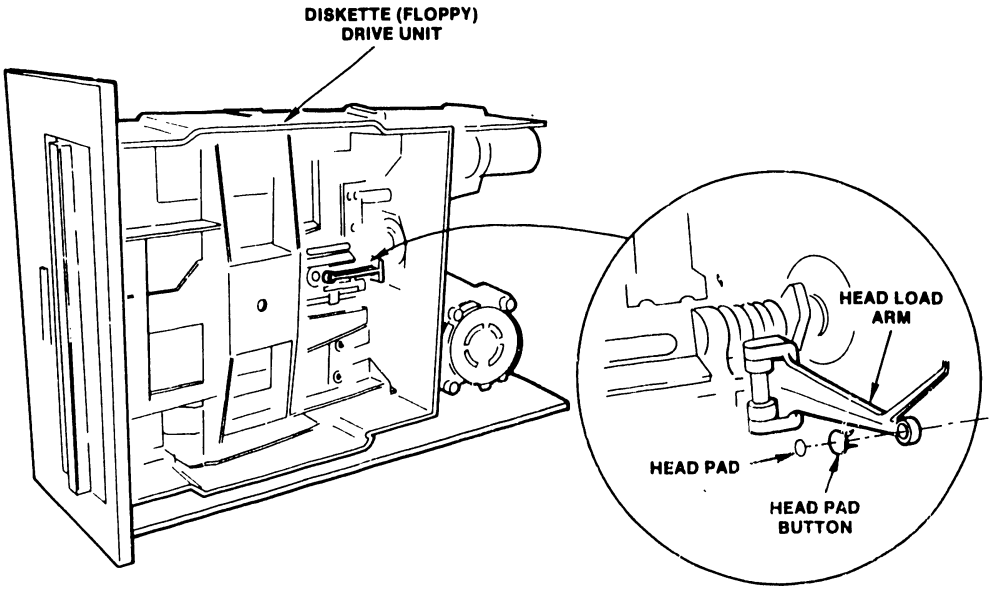

Figure 5-1. Checking/Replacing the Diskette Drive Head Pad

5.3 CORRECTIVE MAINTAINENCE

This section provides the information necessary to remove and replace OIS 105/115/125A/130A-E parts and assemblies. In general, most parts and assemblies are accessed with the top cover of the Master Processor removed. Thus, the top cover removal/replacement procedure is provided first and is referenced by most of the following repair procedures.

5.3.1 Table of Field-Replaceable Items

TABLE 5-1. FIELD-REPLACEABLE ITEMS

ITEM	PART NUMBER
Floppy Diskette Drive w/Door Lock (60Hz)	278-4003-M
Floppy Diskette Drive w/Door Lock (50Hz)	278-4003-1M*
Shugart (4Mb) Fixed Disk Drive (60Hz)	278-4013
Shugart (4Mb) Fixed Disk Drive (50Hz)	278-4013-1*
Shugart (8Mb) Fixed Disk Drive (60Hz)	278-4014
Shugart (8Mb) Fixed Disk Drive (50Hz)	278-4014-1*
Quantum (16Mb) Fixed Disk Drive (60Hz)	278-4024
Quantum (16Mb) Fixed Disk Drive (50Hz)	278-4024-1*
Quantum (32Mb) Fixed Disk Drive (60Hz)	278-4025
Quantum (32Mb) Fixed Disk Drive (50Hz)	278-4025-1*
Load Button Kit	726-1005
Floppy Diskette Cable	220-3011
Floppy Door Lock kit	725-0053-93
PCA 25006	726-1009
PCA OIS CPU Memory	210-7501-D
PCA OIS 10 Meg/Flopppy Controller	210-7502
PCA OIS Data Link Controller	210-7503
PCA OIS Data Buffer	210-7504-A
PCA OIS Winchester "B" Controller	210-7653-A
PCA OIS Winchester "A" Controller	210-7950
PCA Regulator	210-7887
PCA OIS 128K Extended Memory (Mother/Daughter)	212-3025
Cable 10 Mg Daisy Chain Drive 1 (OIS 125A/130A-E)	220-0169-1
Cable 10 Mg Daisy Chain Drive 2 (OIS 125A/130A-E)	220-0187-1
Cable 10 Meg (OIS 125A/130A-E)	220-0236
Motherboard Assembly	270-0456
Front Panel Assembly	270-0608
Transformer Assembly 60Hz	270-0619
Transformer Assembly 50Hz	270-0619-1*
Main Chassis Assembly 60Hz	279-0373
Main Chassis Assembly 50Hz	279-0373-1*
Power Box Assembly	279-0374
Serial Connector Plate Assembly	279-0397
Fuse 3 Amp	360-1031-SB*
Fuse 5 Amp	360-1051-SB
Fan Muffin	400-1003

* International Only.

5.3.2 Remove/Replace Procedures for the Master Processor

5.3.2.1 Removing/Replacing the Top Cover

ITEM: Top Cover Weldment	WLI #: 458-0855

To remove:

Eight Phillips screws secure the top cover of the Master Unit: three at each side and two at the rear.

A. Remove the two Phillips screws at the rear of the unit.
B. Remove the three Phillips screws at each side of the unit.
C. Slide the cover forward and lift off.

To replace:

The top cover slides onto the Master Processor and is secured by eight Phillips screws: three at each side and two at the rear.

A. Set the top cover over the front of the Master Processor and slide fully to the rear.
B. Insert and start the two Phillips screws at the rear panel: do not tighten.
C. Insert and start the six Phillips screws (three each side) at the sides of the top cover.
D. Tighten all screws.

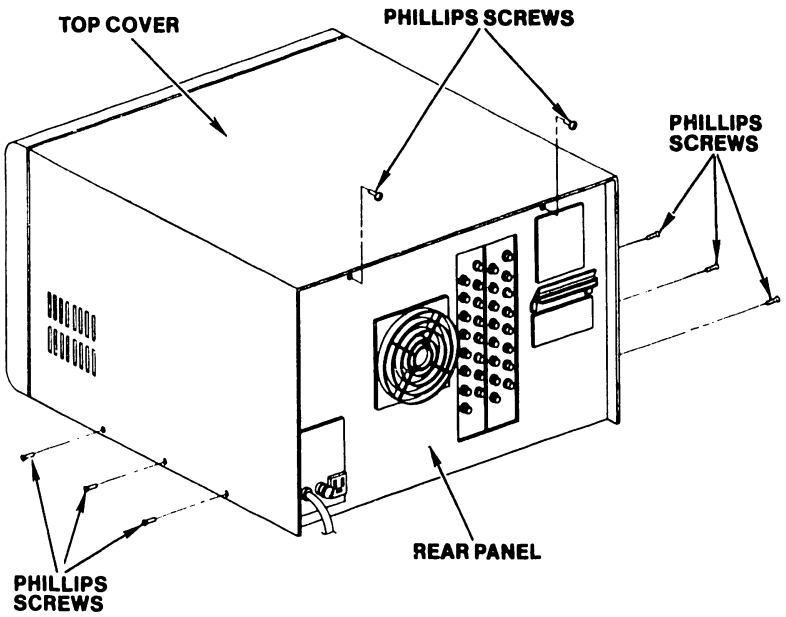

Figure 5-2. Top-Cover Removal

5.3.2.2 Removing the Floppy Diskette Drive

ITEM: Floppy Diskette Drive	WLI #: 278-4003-M

The diskette drive unit is mounted on a base plate whose guides fit into corresponding slots in the Master Processor bottom pan. The entire unit is secured by a "captured" hold-down screw.

To remove:

A. Slide the Floppy Diskette Cable out of its retainer.
B. Disengage the "captured" hold-down screw.
C. Slide the diskette drive halfway out by firmly grasping the front of the unit and pulling out and up.
D. Disconnect the power cord and the Floppy Diskette Cable at the rear of the diskette-drive unit.
E. Pull the diskette drive clear of the Master Processor.

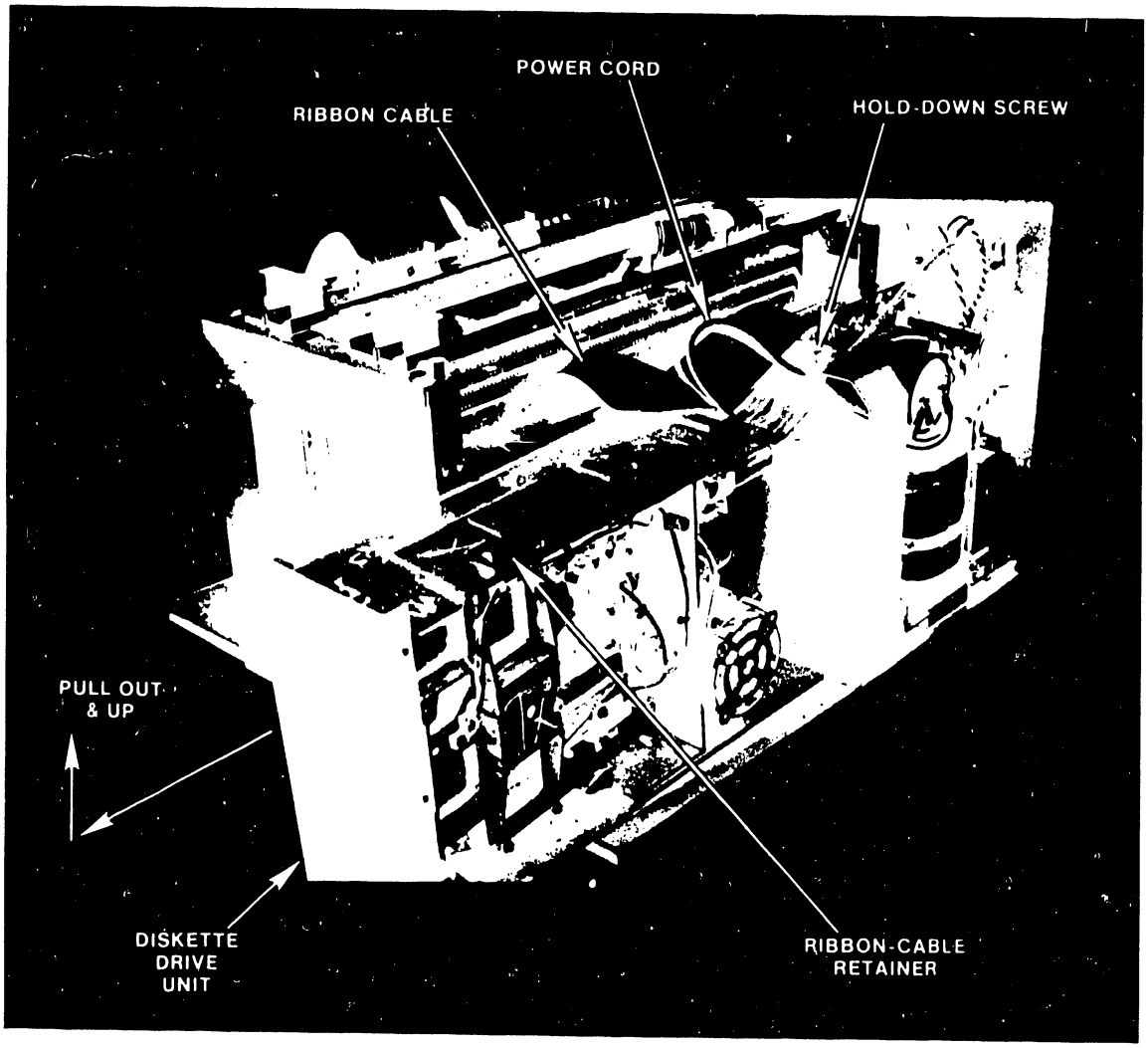

Figure 5-3. Removing the Diskette-Drive Unit

5.3.2.3 Replacing the Floppy Diskette Drive

ITEM: Floppy Diskette Drive	WLI #: 278-4003-M

The diskette drive unit is mounted on a base plate whose guides fit into corresponding slots in the Master Processor bottom pan. The entire unit is secured by a "captured" hold-down screw.

To replace:

A. Slide the unit part way onto the bottom pan such that the base-plate guides engage the corresponding slots.

> **CAUTION**
> Connect the floppy diskette cable such that the cable-connection end of the connector is at the top.

B. Connect the power cord and Floppy Diskette Cable at the rear of the diskette-drive unit.
C. Firmly push the unit into the slots until the hold-down screw and threaded hole are aligned. (The unit may be positioned by aligning the bracket and casting "shoulder" with the finger and thumb.)
D. Tighten the "captured" hold-down screw.
E. Insert the Floppy Diskette Cable into its retainer.

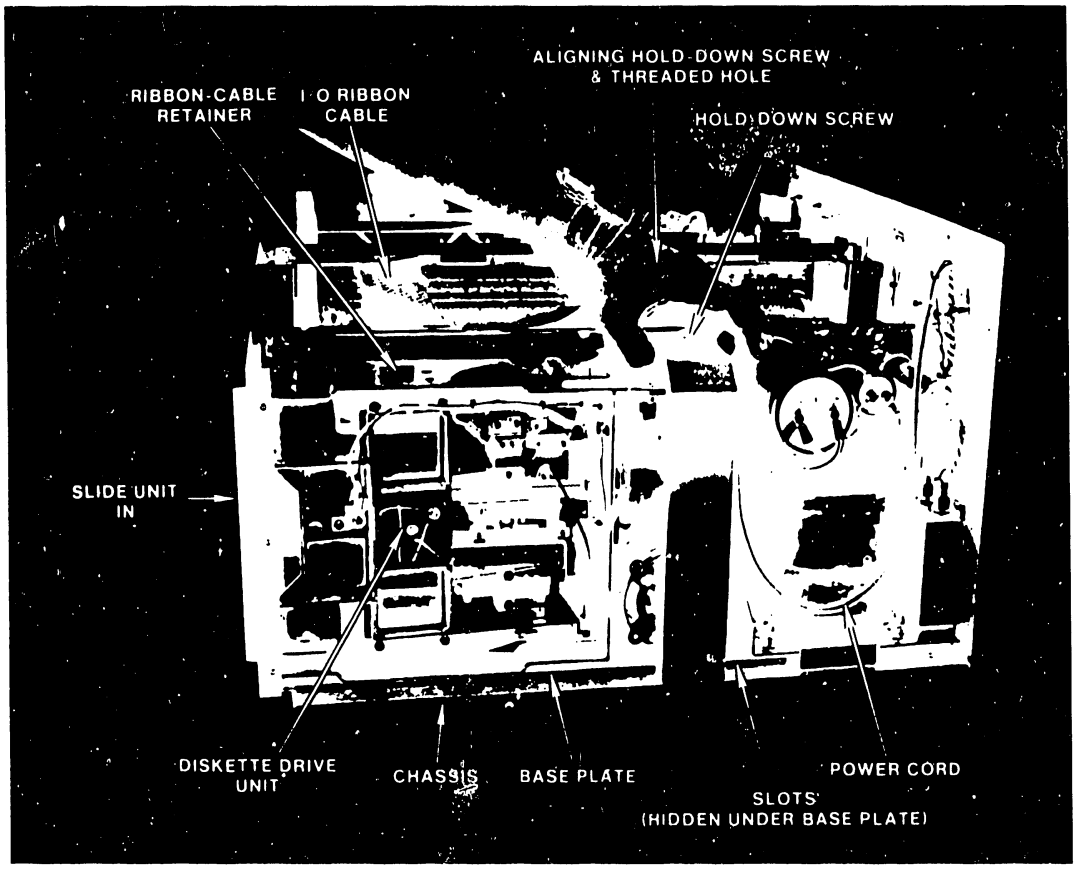

Figure 5-4. Replacing the Diskette-Drive Unit

5.3.2.4 Removing/Replacing the Diskette-Drive Baseplate

---------- NOTE ----------
When removing a diskette drive unit that is to be replaced, remove the baseplate and install it on the replacement unit.

Three Phillips screws mount the baseplate to the drive unit.

To remove:

A. Turn the diskette drive unit on its side.
B. Remove the three baseplate mounting screws.
C. Lift the baseplate from the drive unit.

To replace:

A. Fit the baseplate to the diskette drive unit.
B. Insert and tighten the three baseplate mounting screws.
C. Ensure that the screws securing the slides are tight.

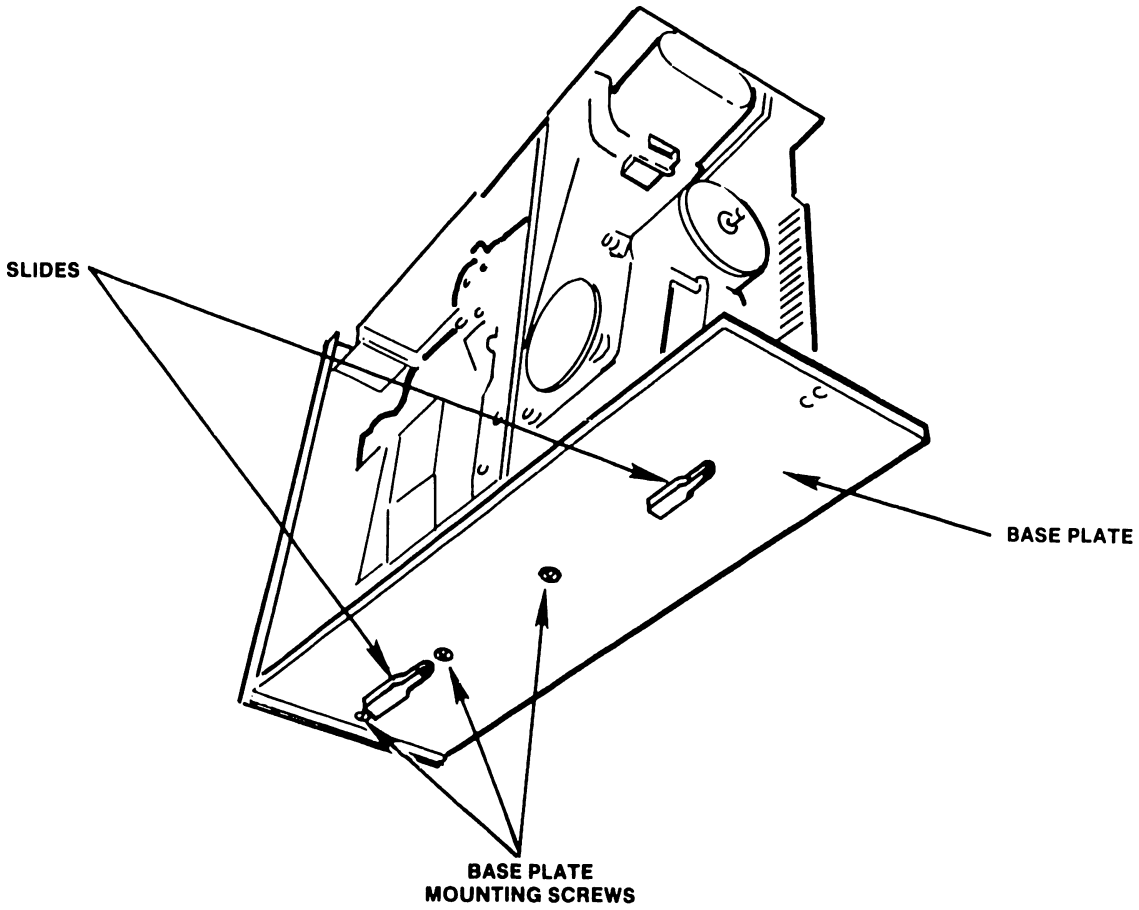

Figure 5-5. Removing/Replacing the Diskette-Drive Baseplate

5.3.2.5 Removing/Replacing the Diskette-Drive Headpad

ITEM: Load Button Kit	WLI # 726-1005

The headpad is cemented to the head load button, which in turn, fits onto the head load arm. The headpad is replaced by replacing the head load button. Removing and replacing the headpad does not require that the diskette drive unit be removed from the Master Processor.

To remove:

CAUTION

Do not twist the head load arm or raise the arm too far.

A. Raise the head load arm (no more than 90°) to access the head load button.
B. Remove the button: squeeze the prongs of the button together and push through the hole in the arm.
C. Discard the button.

To replace:

A. Prior to inserting the new head load button, ensure that its headpad is securely fastened. If not, replace the head load button.
B. Raise the head load arm to access the mounting hole in the head load arm.
B. Insert the new head load button into the head load arm.
C. Carefully lower the arm.

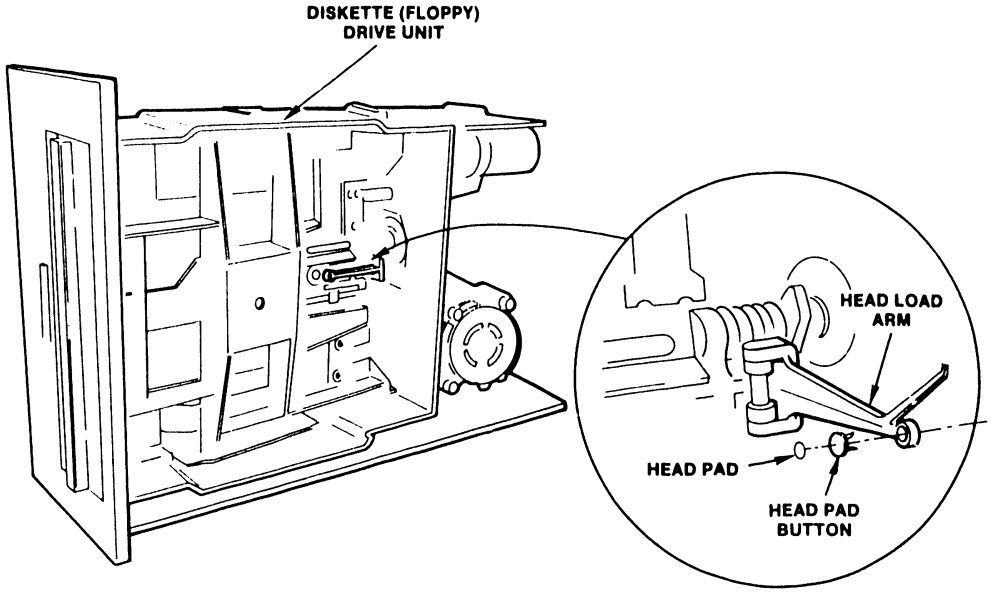

Figure 5-6. Removing/Replacing the Diskette-Drive Headpad

5.3.2.6 Removing/Replacing the Floppy Diskette Cable

ITEM: Cable Floppy Diskette	WLI # 220-3011

To remove:

A. Slip cable from the hold-down clip on the diskette drive unit.
B. Partially remove diskette drive unit from Master Processor.
C. Disconnect Floppy Diskette Cable from the back of the drive unit.
D. Disconnect Floppy Diskette Cable from its motherboard connector.

To replace:

The diskette drive unit must be at least partially removed in order to seat its ribbon-cable connector on the motherboard.

A. Firmly seat the Floppy Diskette cable connector on the motherboard. Align pin 1 (marked edge of cable to front of unit).
B. Route the cable over the top of the U-chassis and the Hold-down/ Protection Bracket.

CAUTION

Connect the floppy diskette cable to the drive such that the cable-connection end of the connector is at the top.

C. Connect the cable to the rear of the diskette drive unit.
D. Replace the diskette drive unit and insert the cable into its retainer.

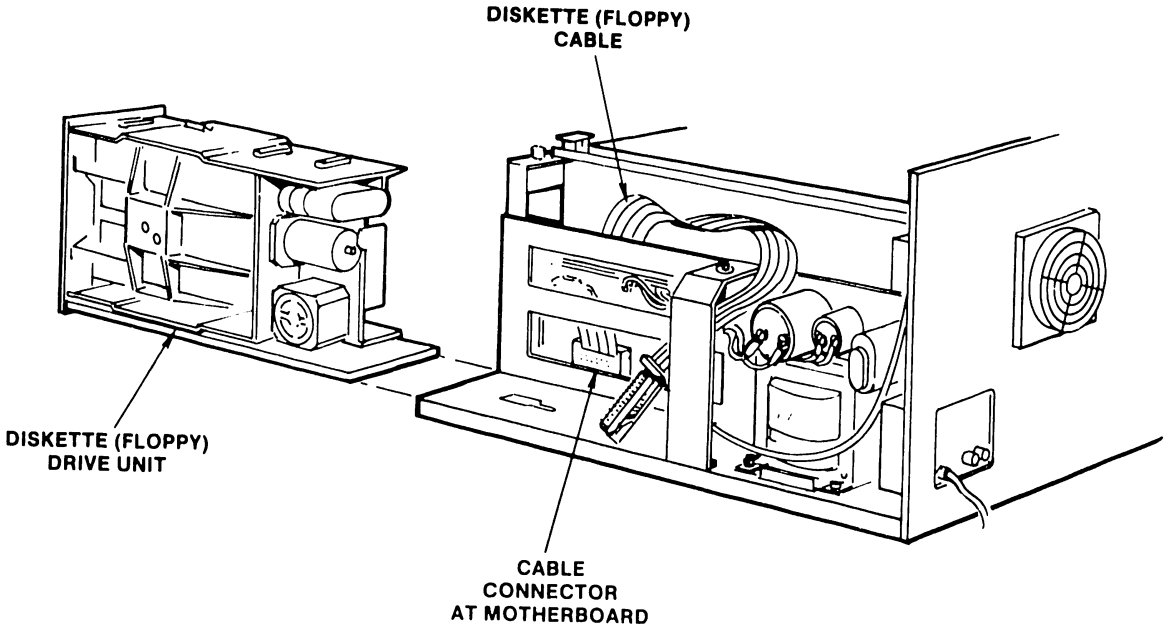

Figure 5-7. Removing/Replacing the Floppy Diskette Cable

5.3.2.7 Upgrading the Diskette Drive Door Lock

ITEM: Door Lock Kit	WLI #: 725-0053-93

Perform the following steps to convert a 928 Diskette Drive (WL# 278-4003) to a OIS-140 class Diskette Drive (WL# 278-4003-M). Note: This procedure is neccessary only if the 278-4003-M diskette drive is not available.

A. Remove the Diskette Drive Assembly from the Master Processor chassis.
B. Remove the (Wang) Faceplate Cover Assembly from the Diskette Drive Assembly. (Fastened by five Phillips screws.)
C. With the drive assembly door latched, remove and save the door handle and its hardware for step H. (Attached with two Allen screws.)
D. Remove the (Shugart) Functional Faceplate Assembly "A" from the drive chassis. (Save the four one-quarter inch hex screws for step G.)
E. Remove and discard the original push bar "B" from the (Shugart) Functional Faceplate Assembly. Save the hardware.
F. Attach the new Door Lock Latch Assembly "C" and LED push bar "B" onto the (Shugart) Functional Faceplate Assembly "A". Spring Plate "D" secures "C". Shock Pad "E" cushions door action.
G. Re-attach the (Shugart) Functional Faceplate Assembly onto the drive chassis. Use the hardware removed in step D.
H. Re-attach the door handle to the Diskette Drive Assembly using the Allen screws removed in step C.
I. Re-attach the (Wang) Faceplate Cover Assembly using the hardware removed in step B.
J. Check the cartridge guide adjustment using the cartridge guide tool.
K. Proceed to the Door Lock PCA Upgrade procedure. (7.3.7)

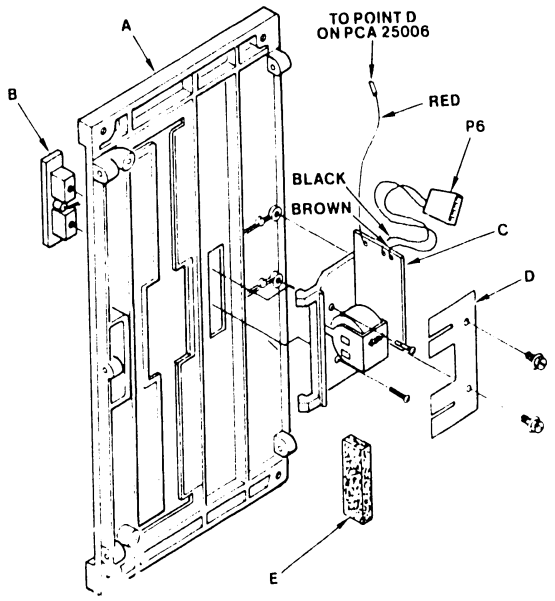

Figure 5-8. Diskette Drive Door Lock Assembly

5.3.2.8 Upgrading the Diskette Drive PCA

ITEM: PCA 25006	WLI #: 726-1009

Perform the following steps to upgrade the 928 series Diskette Drive printed circuit assembly (PCA 25006) after the OIS-140 class Diskette Drive Door Lock Upgrade procedure has been performed. Note: This procedure is neccessary only if the 278-4003-M diskette drive is not available.

A. Cut the circuit etch between U3E and pin 7 of U3F.
B. Solder a jumper wire between PCA point "B" and pin 7 of U3F.
C. Remove and save the "push-on" pin at pin 3 of J6.
D. Insert and solder the pin saved from the previous step into the feed-thru hole at point "D" near circuit board pin 8.
E. Plug the red wire from the new door lock assembly onto the new push-on pin installed at point "D".
F. Plug the 2-wire drive/board connector from the new door lock assembly onto pins 1 and 2 of J6. (Black wire to pin 1.)

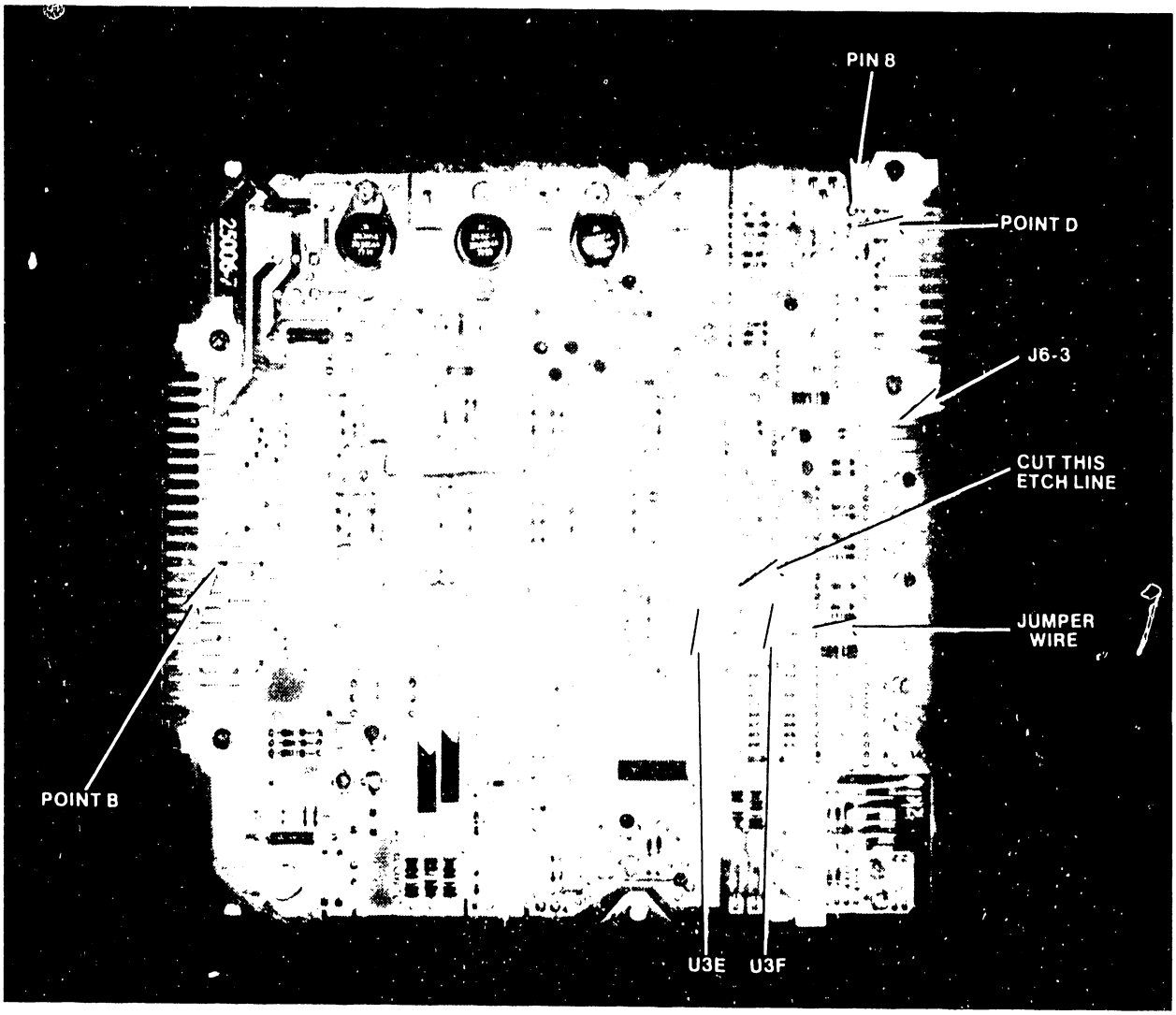

Figure 5-9. 928 Door Lock PCA Upgrade

5.3.2.9 Removing the PCAs

ITEM	WLI #
PCA OIS CPU Memory	210-7501-D
PCA OIS 10 Meg/Floppy Controller	210-7502
PCA OIS Data Link Controller	210-7503
PCA OIS Data Buffer	210-7504-A
PCA OIS Winchester "B" Controller	210-7653-A
PCA OIS Winchester "A" Controller	210-7950

These six PCAs are secured by two board retainers. These board retainers are held in place by a single Phillips screw and a tab.

To remove:

A. Disconnect a.c. power.
B. Remove the top cover.
C. Remove the two board retainers. (These are each secured by a Phillips screw and a tab.)
D. Remove the PCAs by pulling up on the board handles.

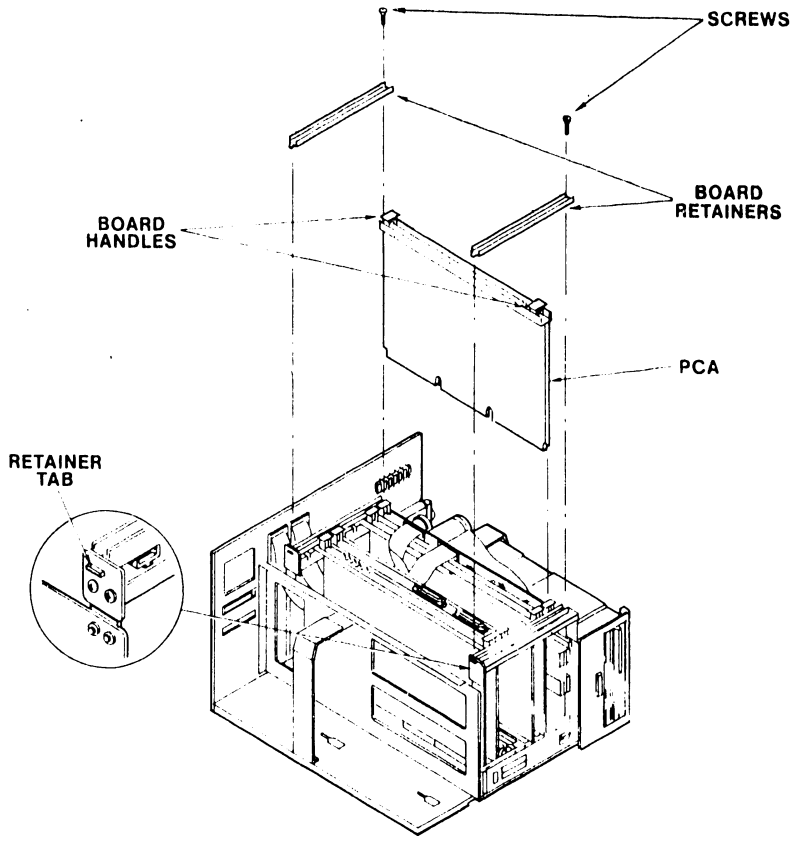

Figure 5-10. Removing the PCAs

5.3.2.10 Replacing the PCAs

The six PCAs (7501-D, 7502, 7503, 7504, 7653, and 7950) are secured by two board retainers. These board retainers are held in place by a single Phillips screw and a tab. The PCA faceplates should not fit snugly against the board racks: the clearance should allow 0.015 inches between the faceplate and the rack. (Note that a matchbook cover is approximately 0.015 inches thick.) The retainers should fit just tightly enough to deform the RF gasket.

To replace:

A. Fit each PCA into the board connectors on the motherboard, respectively as shown in Figure 5-11. (The board connectors on the motherboard are provided with card-guides to ease insertion, and card-keys to center the boards.)
B. Seat the boards by pushing down fimly on the board handles.
C. Verify the adjustment of the racks; allow 0.015 inches between the PCA faceplate and the rack.
D. Adjust the racks if necessary. (See paragraph 5.3.3.1)
E. Replace the board retainers and verify their adjustment; the RF gasket should be snug but only slightly deformed.
F. Adjust the retainers if necessary. (See paragraph 5.3.3.1)
F. Tighten all screws.

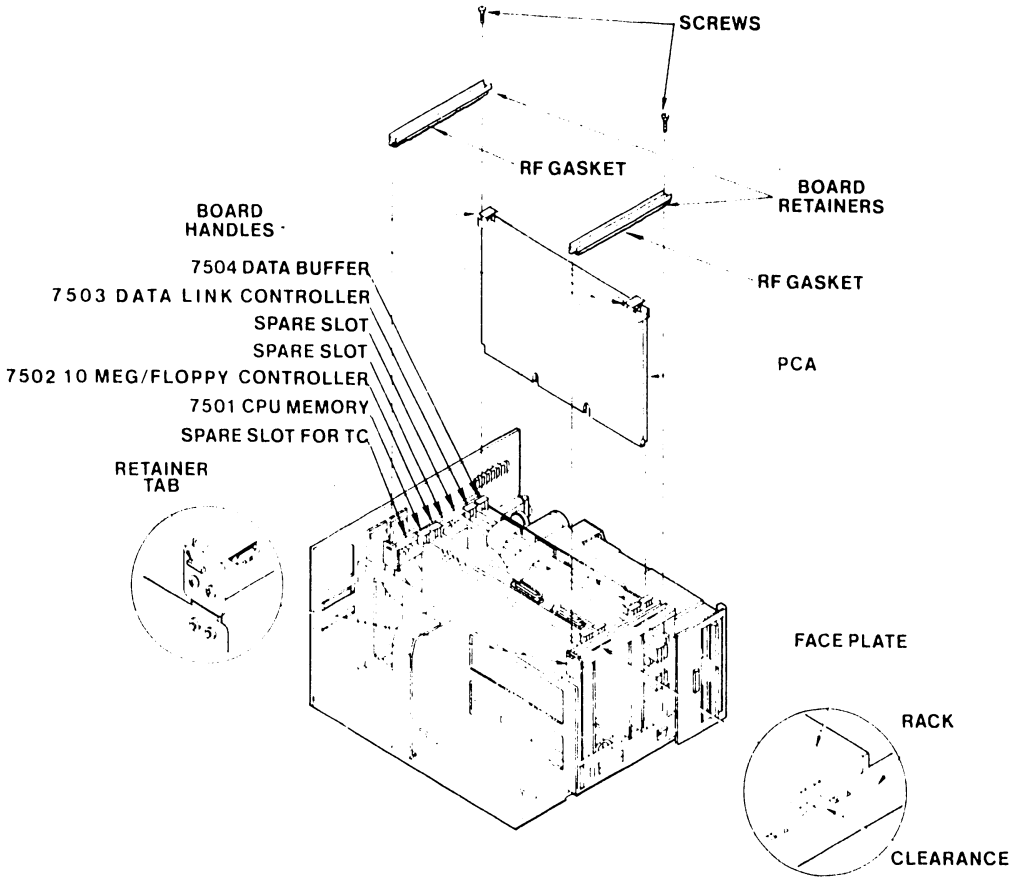

Figure 5-11. Replacing the PCAs

5.3.2.11 Removing/Replacing the Regulator PCA

ITEM: PCA Regulator	WLI #: 210-7887

The regulator PCA is held in place by two snap-lock fasteners which fit into holes in the U-chassis. Black plastic knobs (see Figure 5-12) fit into the snap-lock fasteners and exert a spreading force to lock the board in place. Pulling out the knobs unlocks the snap-lock fasteners and the board can be unsnapped from the U-chassis and removed.

To remove:

A. Disconnect a.c. power.
B. Remove the top cover.
C. Pull out the two black plastic knobs.
D. Gently pull the board away from the U-chassis to unsnap the fasteners.
E. Lift the board up and out of the connectors on the motherboard.

To replace:

A. Fully insert the board into the connectors on the motherboard.
B. With the snap-fasteners unlocked, push the board against the U-chassis until the snap-fasteners are inserted.
C. Push the black plastic knobs in to lock the fasteners.

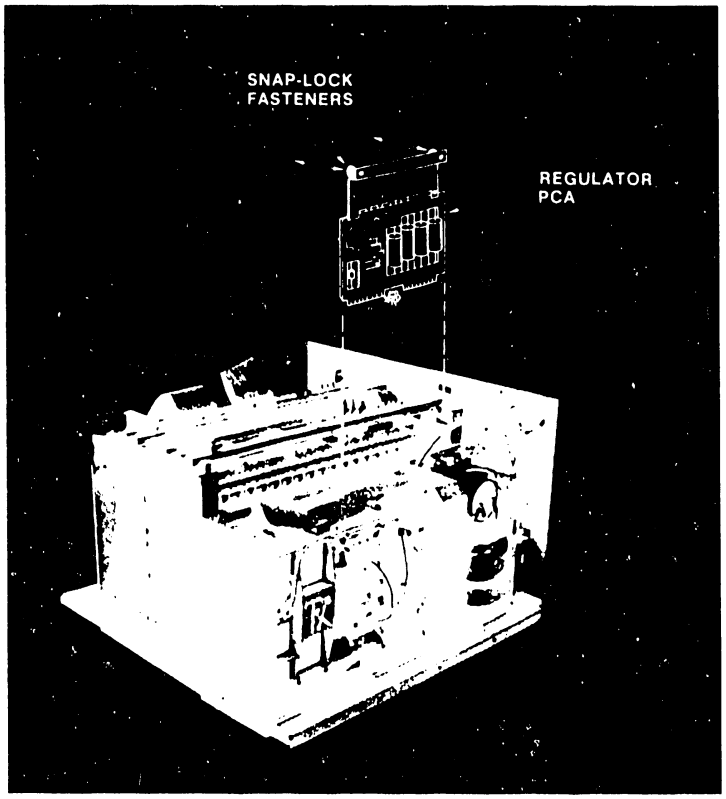

Figure 5-12. Removing/Replacing the Regulator PCA

5.3.2.12 Removing the Transformer Assembly

ITEM:		
Transformer Assembly 60Hz	WLI #:	270-0619
Transformer Assembly 50Hz	WLI #:	270-0619-1

To remove:

A. Disconnect a.c. power.
B. Remove the top cover.
C. Remove all PCAs (including the Regulator PCA).
D. Remove the floppy diskette drive.
E. Disconnect the Transformer Assembly a.c. power cord (twisted pair) at the a.c. terminal strip (see Figure 5-13).
F. Disconnect the two Transformer Assembly connectors at the motherboard.
G. Disconnect the four orange and two violet leads of the Transformer Assembly wiring harness at the heat sink.
H. Disconnect the dark violet and two blue (connected) leads from the Heat Sink Assembly wiring harness at the positive posts on the Transformer Assembly capacitors.
I. If necessary, snip the cable ties and separate the wiring harnesses.
J. Remove all screws which secure the Transformer Assembly chassis:
   a. the two lower screws for the power box
   b. two flat head screws at the top edge of the U-chassis
   c. four screws on the inside face of the U-chassis.
K. Taking care not to snag the cabling, slide the transformer assembly out of the Master Processor.

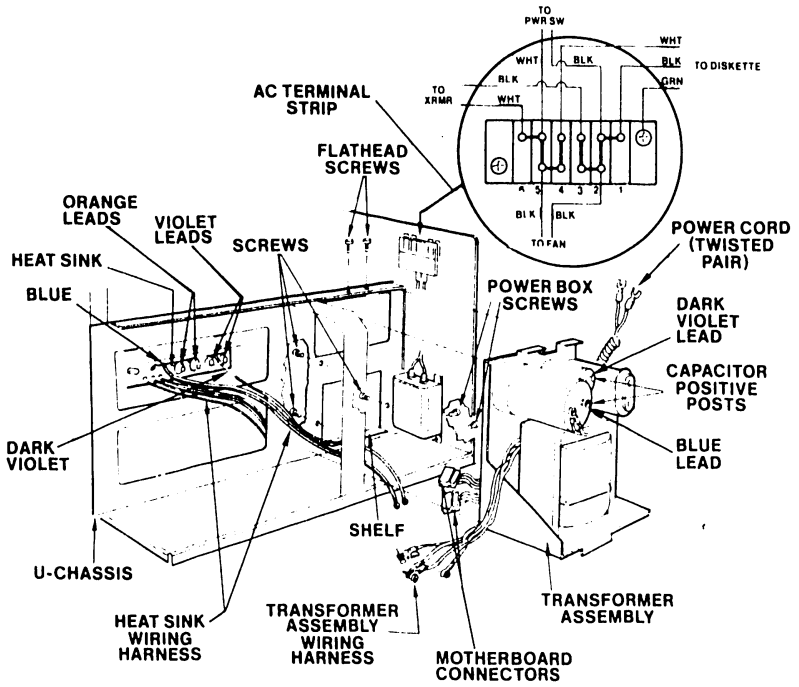

Figure 5-13. Removing the Transformer Assembly

5.3.2.13 Replacing the Transformer Assembly

ITEM:	Transformer Assembly 60Hz	WLI #:	270-0619
	Transformer Assembly 50Hz	WLI #:	270-0619-1

To replace:

A. Carefully feed the (two) Transformer Assembly connectors through the U-chassis cutout while positioning the Transformer Assembly onto the lip of the U-chassis support shelf.
B. Align the screw holes and insert the four screws at the side of the U-chassis, the two flat head screws at the top edge of the U-chassis, and the two lower screws for the power box.
C. Tighten all eight screws.
D. Connect the Heat Sink wiring harness to the positive posts of the Transformer Assembly capacitors (one dark violet and two connected blue leads; see Figure 5-14).
E. Connect the Transformer Assembly wiring harness to the Heat Sink Assembly (four orange and two violet leads; see Figure 5-14).
F. Attach the two Transformer Assembly connectors to the motherboard.
G. Connect the Transformer Assembly power leads to the a.c. terminal strip. (See Figure 5-14.)
H. Replace the diskette drive and connect the diskette cable.
I. Replace the PCAs (including the Regulator PCA).
J. Replace the top cover.

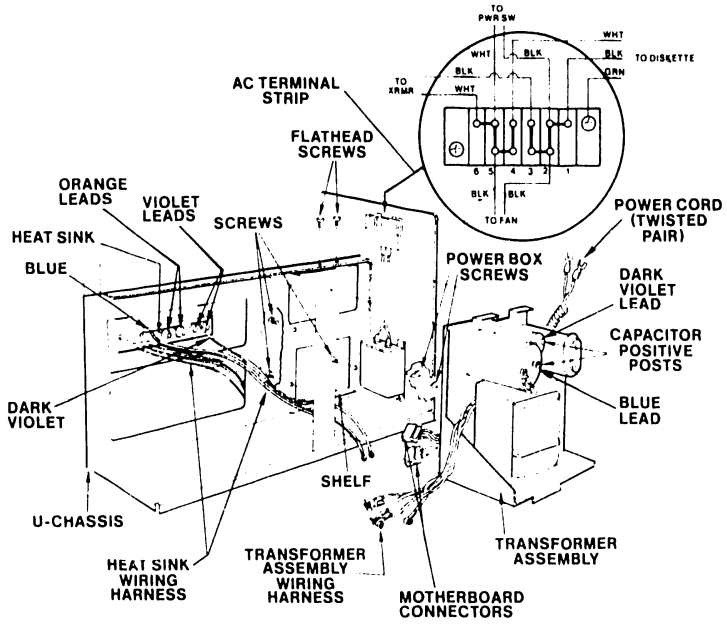

Figure 5-14. Replacing the Transformer Assembly

5.3.2.14 Removing/Replacing the Front Panel

ITEM: Front Panel Assembly	WLI #: 270-0608

To remove:

A. Disconnect a.c. power.
B. Remove the top cover.
C. Remove the diskette drive.
D. Remove the four Phillips screws, two on each side, securing the front panel to the U-chassis.
E. Disconnect the ribbon-cable from the motherboard (connector J4).
F. Disconnect the Faston connectors from the rear of the POWER switch.
G. The front panel may now be lifted out.

To replace:

CAUTION

Connect the power leads to the rear of the POWER switch as follows: a. the two black leads to the leftmost connectors
b. the two white leads to the rightmost connectors.
Align pin 1 on connector J4 and pin 1 of the ribbon cable.

Reverse the above procedure.

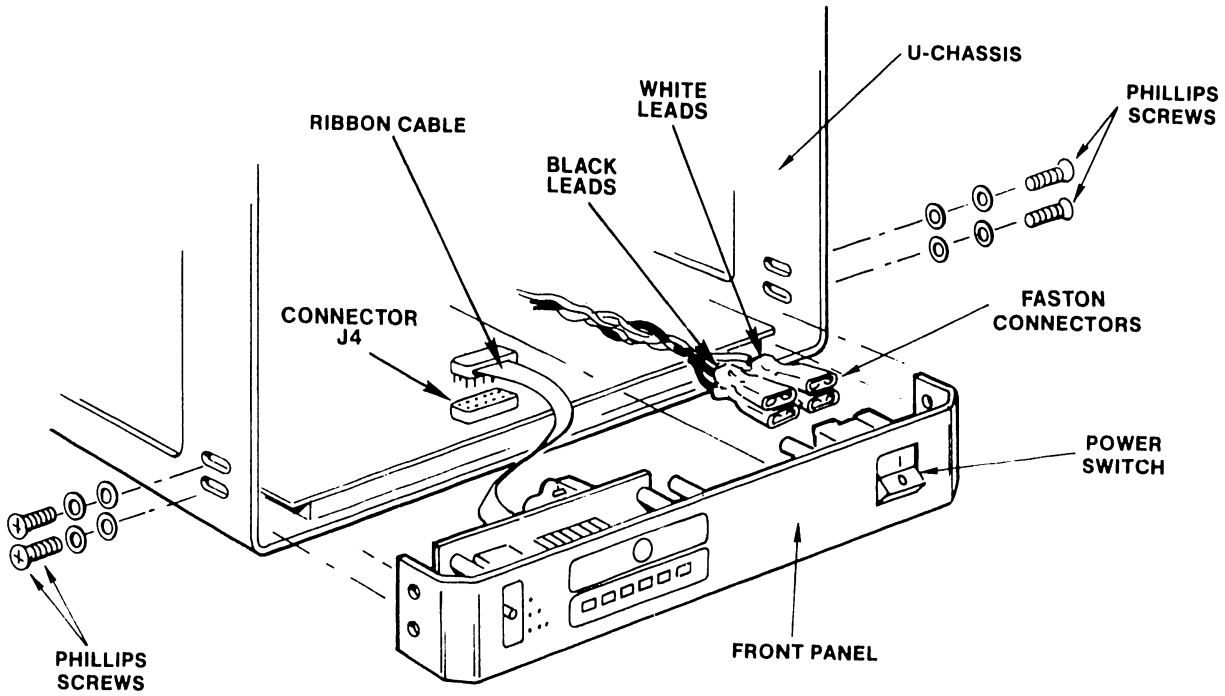

Figure 5-15. Removing/Replacing the Front Panel

5.3.2.15 Removing the Motherboard

ITEM: Motherboard	WLI #: 270-0456

To remove:

A. Disconnect a.c. power.
B. Remove the top cover.
C. Remove the four PCAs.
D. Remove the regulator PCA.
E. Remove the floppy diskette drive.
F. Remove the front panel.
G. Disconnect the floppy diskette cable (at the motherboard).
H. Disconnect the two Transformer Assembly connectors at the motherboard.
I. Disconnect the four Heat Sink Assembly connectors at the motherboard.
J. Unscrew the two Hold-down/Protection brackets from the U-chassis.
K. Remove the three rear-panel screws securing the bottom pan to the rear panel.
L. Slide the U-chassis and remaining assemblies towards the rear to clear the U-chassis locking guides and remove the bottom pan.
M. Remove the seven pairs of screws under the U-chassis to release the motherboard. Lift the front of the motherboard and pull out.

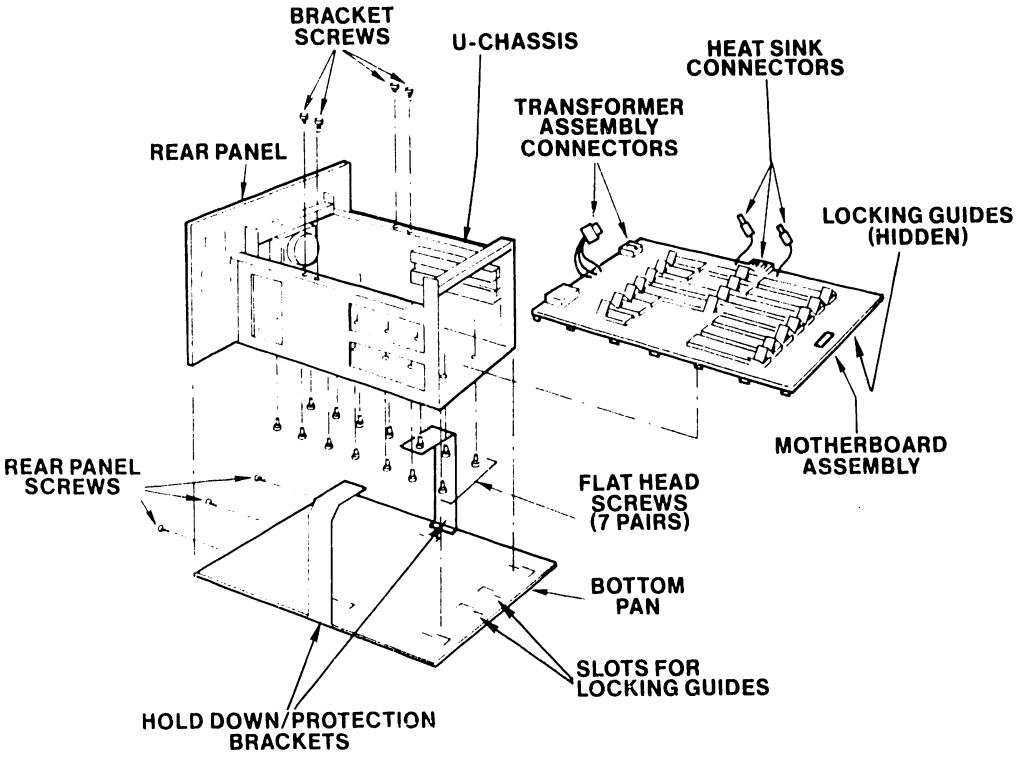

Figure 5-16. Removing the Motherboard Assembly

5.3.2.16 Replacing the Motherboard

ITEM: Motherboard	WLI #: 270-0456

To replace:

A. Carefully insert the motherboard into the Master Processor U-chassis and align the screw holes.
B. Start the 14 Phillips screws which secure the motherboard to the U-chassis.

> CAUTION
> Do not overtighten the securing screws; doing so may crack the motherboard.

C. Tighten the 14 Phillips screws.
D. Slide the U-chassis onto the bottom pan to engage the locking guides.
E. Connect the bottom pan to the rear panel with three screws.
F. Reconnect the Hold-down/Protection brackets to the U-chassis.
G. Connect all electrical connections (six) from the Heat Sink and Transformer assemblies.
H. Connect the floppy diskette cable at the motherboard; ensuring that the marked edge of the cable is to the front.
I. Replace the Front Panel Assembly.
J. Replace the floppy diskette drive.
K. Replace the regulator PCA.
L. Replace the four PCAs.
M. Replace the top cover.

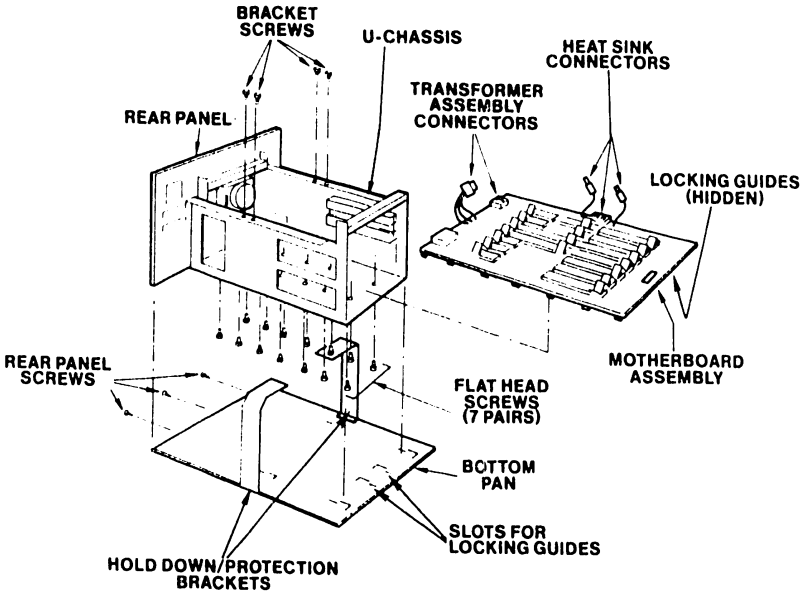

Figure 5-17. Replacing the Motherboard Assembly

5.3.2.17 Removing/Replacing the Power Box Assembly

ITEM: Power Box Assembly	WLI #: 279-0374

To remove:

A. Disconnect a.c. power.
B. Remove the top cover.
C. Remove the four screws on the back panel that secure the Power Box Assembly and the Power Box Cover.
D. Remove the Power Box Assembly through the cutout in the rear panel.
E. Disconnect the Power Switch Cable "Faston" terminals at the Power Box.

To replace:

CAUTION

Connect the white lead to the outer terminal of the Power Box. (See Figure 5-18.)

A. Attach the Power Switch Cable "Faston" terminals to the Power Box Assembly terminals.
B. Insert the Power Box Assembly through the rear-panel cutout.
D. Align the Power Box Assembly, the Power Box Cover, and the four rear-panel screw holes.
E. Start the four screws for the Power Box.
F. Tighten the four screws.
G. Replace the top cover.

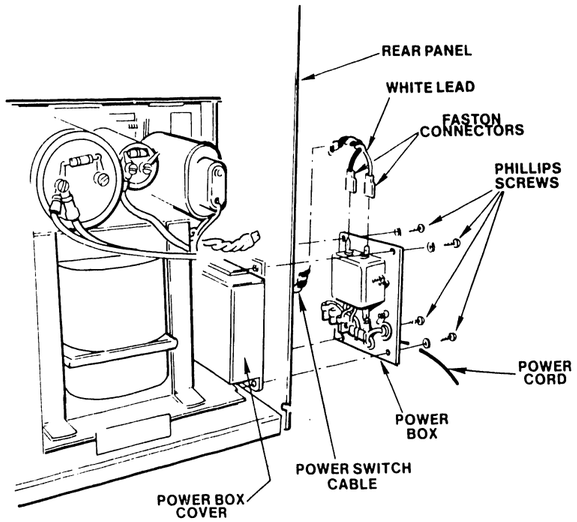

Figure 5-18. Removing/Replacing the Power Box Assembly

5.3.2.18 Removing/Replacing the Serial Connector Plate Assembly

ITEM: Serial Connector Plate Assembly	WLI #: 279-0397

To remove:

A. Disconnect the dual coaxial cables from the serial connector plate(s).
B. Disconnect the ribbon cable(s) from the 7504-board.
C. Remove the four Phillips screws that secure the serial connector plate to the back panel (two at the top and two at the bottom).
D. Remove the serial connector plate.

To replace;

A. Insert the serial connector plate and align the screw holes.
B. Start all four Phillips screws (two at the top and two at the bottom).
C. Tighten all screws.
D. Connect the ribbon cable(s) to the 7504-board: connect I/O ports 1-8 (closest to the fan) to connector J1; ports 9-16 to connector J2.
E. Connect the dual coaxial cables to the serial connector plate.

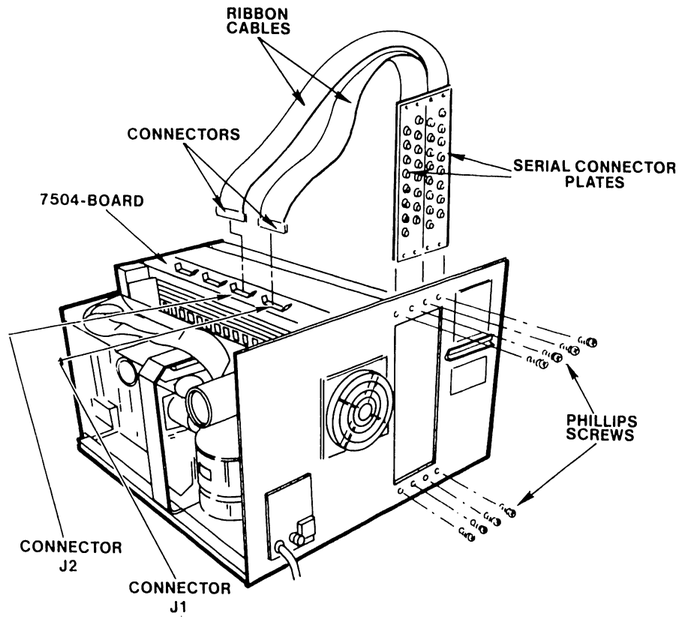

Figure 5-19. Removing/Replacing the Serial Connector Plate Assembly

5.3.2.19 Removing/Replacing the Fan

ITEM: Fan Muffin	WLI #: 400-1003

To remove:

A. Disconnect a.c. power.
B. Remove the top cover.
C. Remove the PCAs (including the Regulator PCA).
D. Disconnect the fan a.c. power cable from the top of the fan assembly.
E. Remove the four screws and nuts that secure the fan.
F. Remove the fan.

To replace:

A. Align fan, fan guard, and screw holes.
B. Install and finger-tighten the four screws and nuts.
C. Tighten the four screws and nuts.
D. Connect the fan a.c. power cable at the top of the fan assembly.
E. Replace the PCAs (including the Regulator PCA).
F. Replace the top cover.

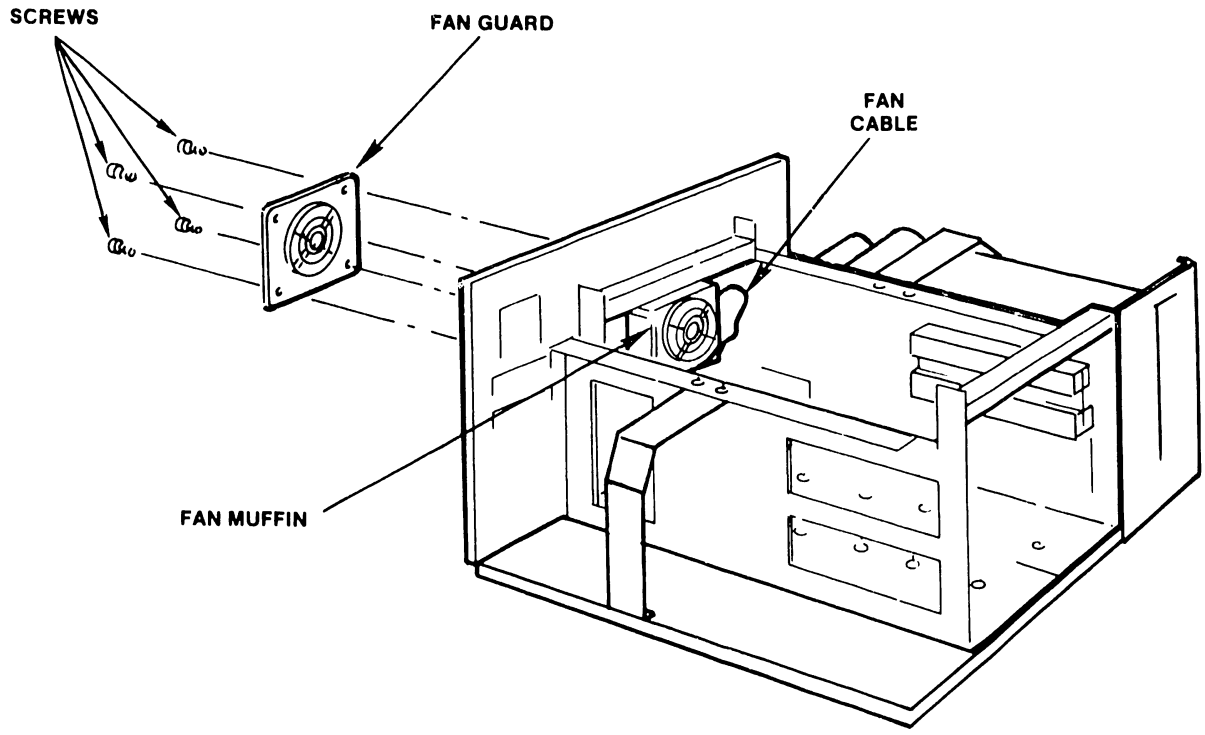

Figure 5-20. Removing/Replacing the Fan

5.3.2.20 Removing/Replacing the Hawk Ribbon Cables

ITEM	WLI #
Cable 10 Mg Daisy Chain Drive 1	220-0169-1
Cable 10 Mg Daisy Chain Drive 2	220-0187-1
Cable 10 Meg	220-0236

Flat, 50-conductor, shielded ribbon cables connect the Master Processor with the Hawk disk units. Removing and/or replacing these cables involves:

A. Inspecting the cable. (See paragraph 4.12.2.1.)
B. Installing Master-Processor Cable Clamp. (See paragraph 4.12.2.2.)
C. Connecting the Cable to the Master Processor. (See paragraph 4.12.2.3.)
D. Grounding the Cable at the Hawk Disk Unit. (See paragraph 4.12.2.4.)
E. Connecting the Cable to the Hawk Disk Unit. (See paragraph 4.12.2.5.)

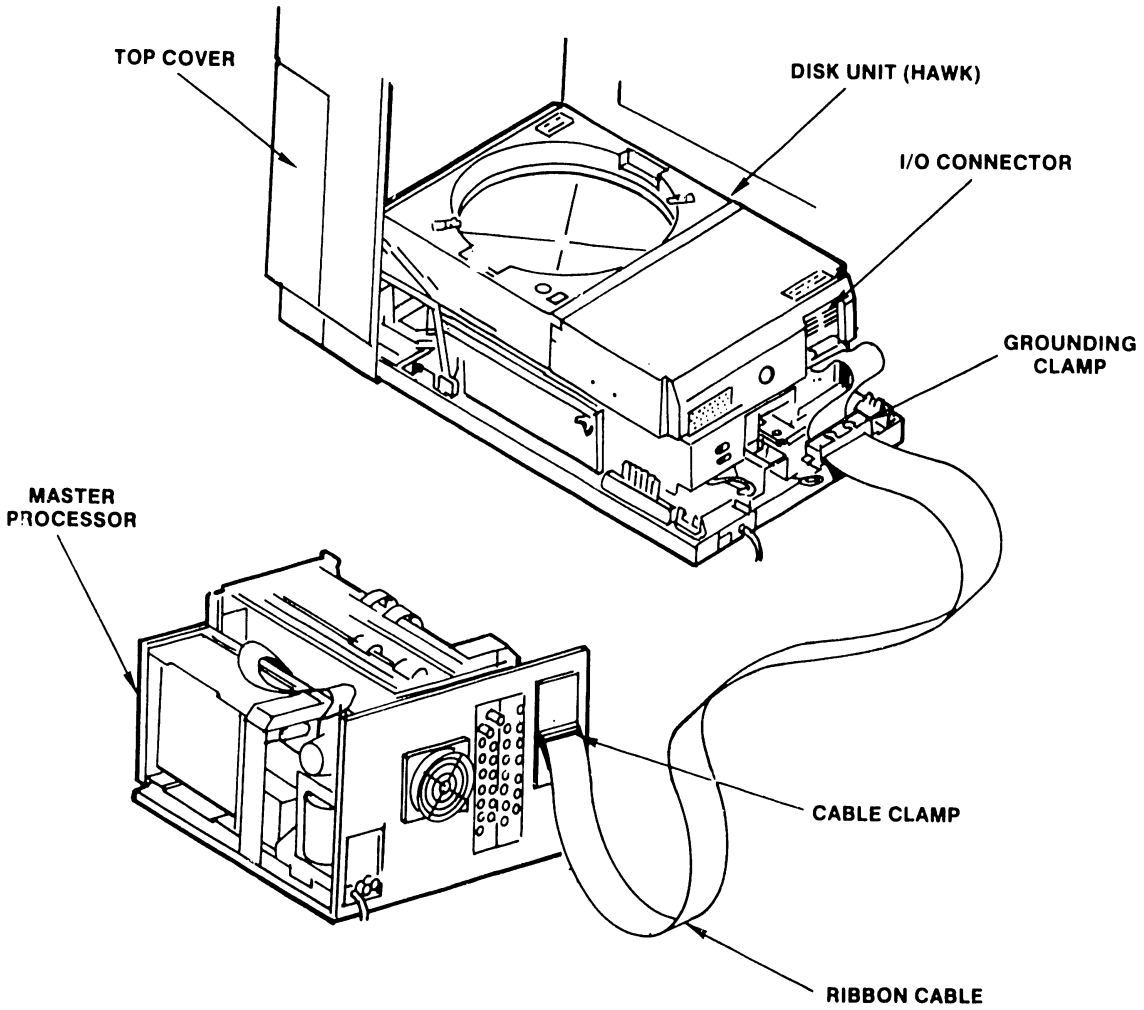

Figure 5-21. Removing/Replacing the Hawk Ribbon Cables

5.3.2.21 Winchester Disk Drive Removal/Replacement

---------- WARNING ----------
Physical replacement of the Winchester disk drive unit requires rotating the head actuator to the shipping position and installing the spindle lock. See Sections 5.3.2.22 and 5.3.2.23.

The Winchester disk drive unit is mounted on a base plate with a guide that fits into a corresponding slot in the Master Processor chassis. The entire unit is secured by a single hold-down screw.

To remove:

A. Remove the hold-down screw: insert a long shank screwdriver through the access hole in the power supply bracket to reach the hold-down screw.

B. Disconnect the AC connector, DC connector and the two ribbon cables at the rear of the Winchester disk drive unit.

C. Slide the Winchester disk drive unit out by firmly grasping the front of the unit and pulling out.

To replace:

A. Slide the Winchester disk drive unit into the Master Processor.

B. Connect the AC cable.

C. Connect the DC cable.

D. Connect the two ribbon cables.

E. Insert and tighten the hold-down screw.

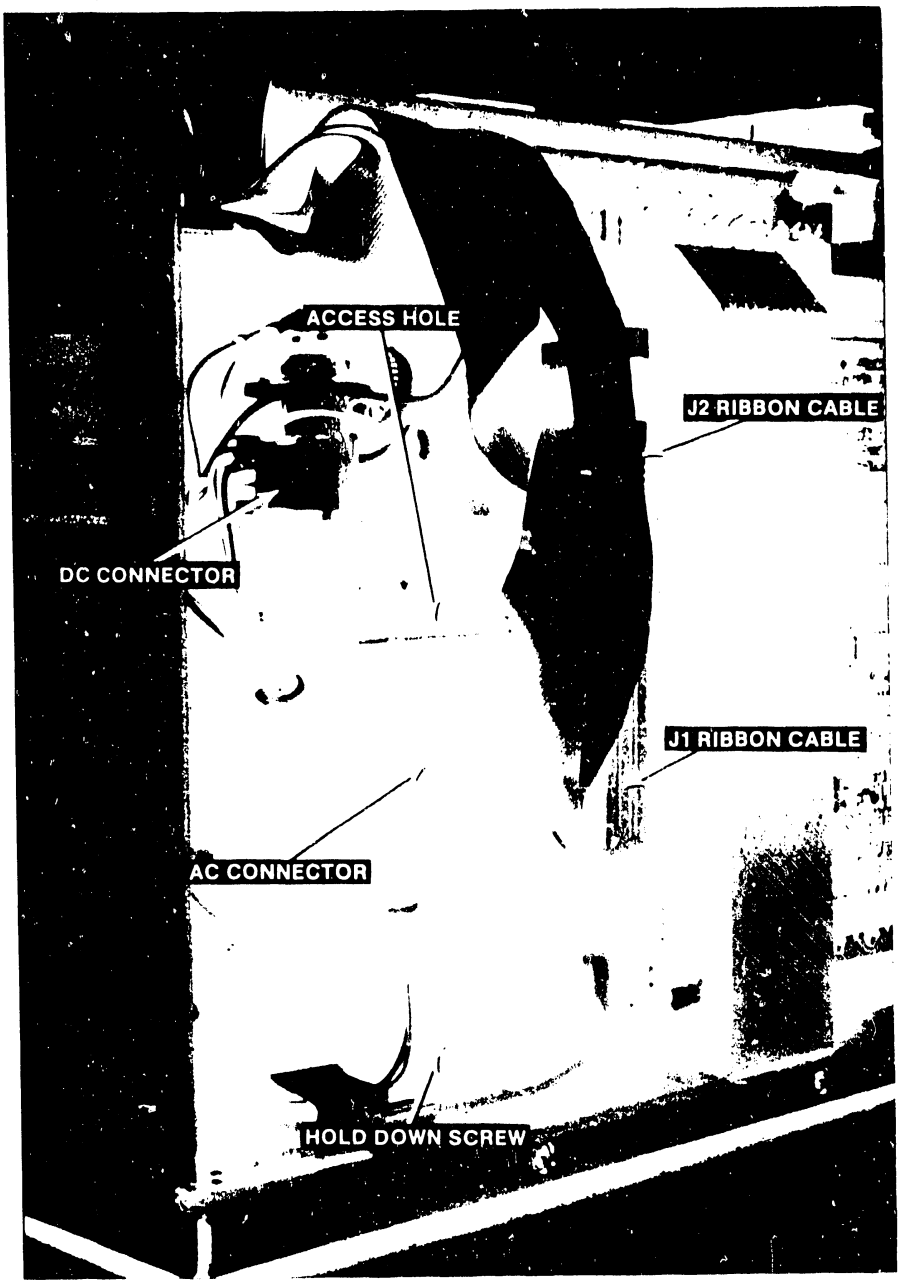

Figure 5-22. Winchester Disk Drive Removal

5.3.2.22 Shugart Winchester Drive Shipping Locks

For the Shugart fixed disk drive, there are two procedures for installing the spindle lock and rotating the head actuator to the shipping position. Procedure 2 should only be used when procedure 1 can not be used.

Procedure 1:

A. Use the Master Monitor diagnostics.
B. Select FTU.
C. Select Winchester drive 4.
D. Enter device number 0.
E. Select direct seek function 7.
F. Input cylinder 255 and watch the heads move to the innermost track.
G. Shut the power off.
H. Attach the spindle lock.
I. Remove the Winchester disk drive unit.

Procedure 2:

A. Turn system power on and verify that the spindle drive motor is running.
B. Wait two minutes to allow the media to get up to operating speed, then rotate the actuator damper until track 0 flag is at right angles and pointing to the 7501-D board.
C. Shut the system power off.
D. Attach the spindle lock.
E. Remove the Winchester disk drive unit.

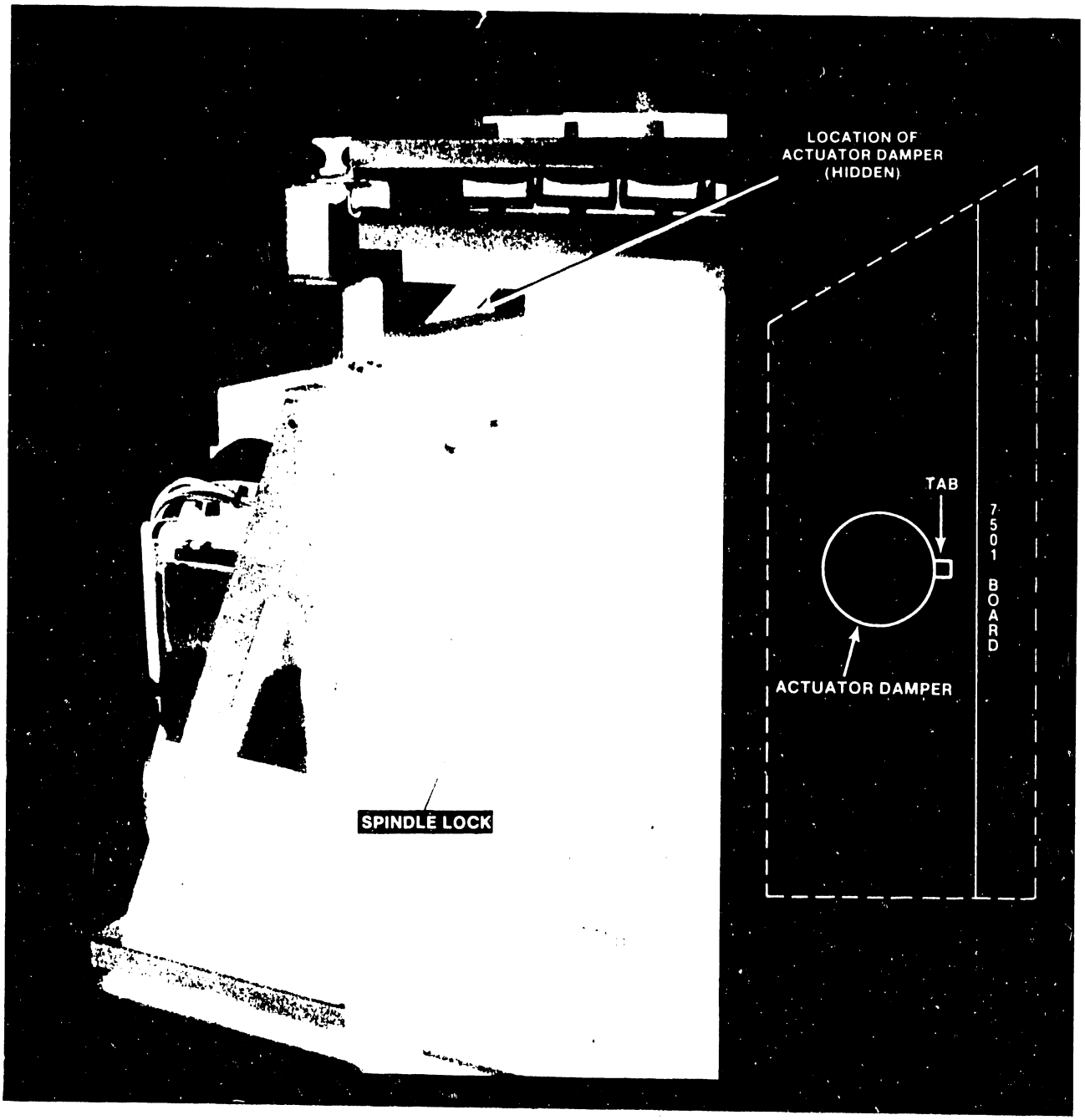

Figure 5-23. Shugart Shipping Lock Removal

5.3.2.23 Quantum Winchester Drive Shipping Locks

On the Quantum series drives, the spindle lock and actator lock are located on the side of the drive that is opposite its PCB (closest to the 7501-D board). They can be seen through two access cutouts in the sheet metal chassis that supports the drive.

---------- NOTE ----------
The Winchester Drive must be removed from the Master Processor in order to perform these procedures.

Use the following procedure to unlock these shipping locks:

1. On the spindle lock (Figure 5-24) loosen the 11/32 inch hex nut.
2. Rotate the locking clip away from the pulley. DO NOT ROTATE PULLEY.
3. Retighten 11/32 inch hex nut.
4. Using a slotted screwdriver, unlock the actuator by rotating the actuator lock counter-clockwise as far as it will go (approximately 1/2 turn). The embossed arrow should now point to 'RUN'(Figure 5-24). DO NOT FORCE.

Use the following procedure in order to lock the shipping locks:

1. Using the slotted screwdriver, lock the actuator by turning the actuator lock clockwise as far as it will go. The arrow should now point to 'LOCK'. DO NOT FORCE.
2. On the spindle lock, loosen the 11/32 inch hex nut.
3. Rotate the spindle lock until it engages the two holes on the spindle's diameter.
4. retighten the 11/32 inch hex nut.

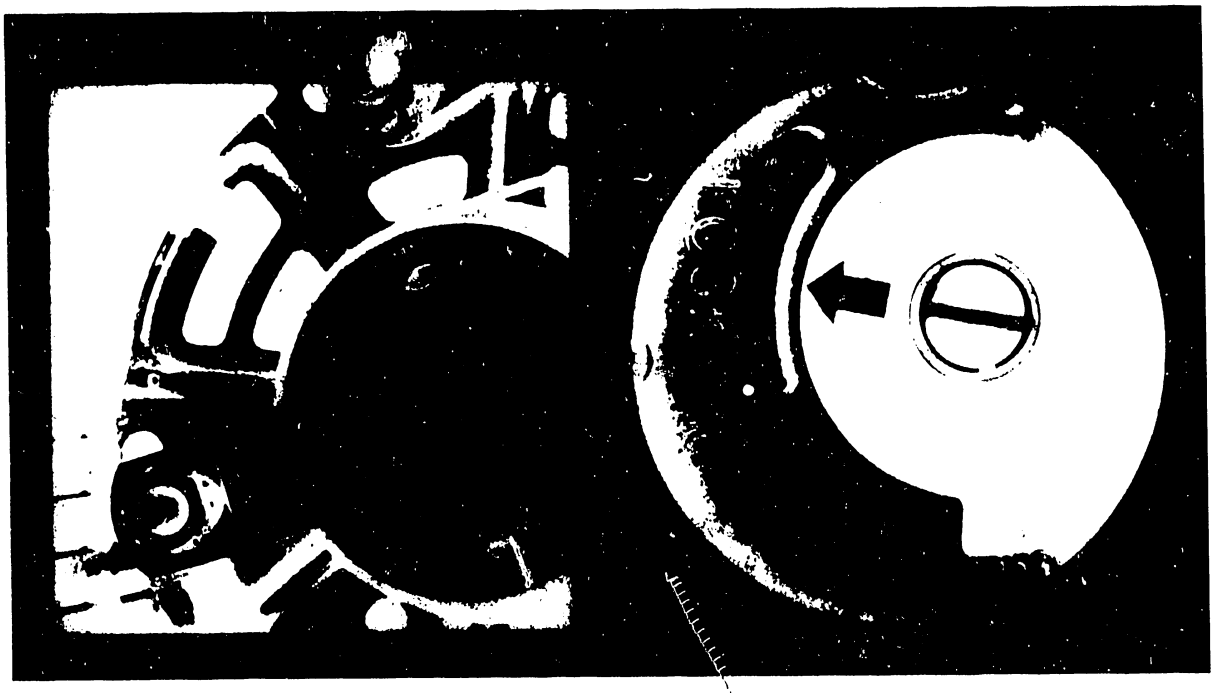

Figure 5-24. Quantum Spindle Lock (left) and Actuator lock (right)

5.3.3 Adjustments/Alignments for the Master Processor

5.3.3.1 Adjusting the PCA Racks

The PCA faceplates should not fit snugly against the board racks: the clearance should allow 0.015 inches between the faceplate and the rack. (Note that a matchbook cover is approximately 0.015 inches thick.) The retainers should fit just tightly enough to deform the RF gasket.

To adjust:

A. Loosen the rack adjusting screws and push the racks down away from the boards.
B. Seat the boards by pushing down firmly on the board handles.
C. Adjust the position of the racks to allow 0.015 inches between the PCA faceplate and the rack.
D. Replace the board retainers and loosen their adjusting screws.
E. Adjust the retainer tab-plate until the RF gasket is snug but only slightly deformed. Tighten the screws.

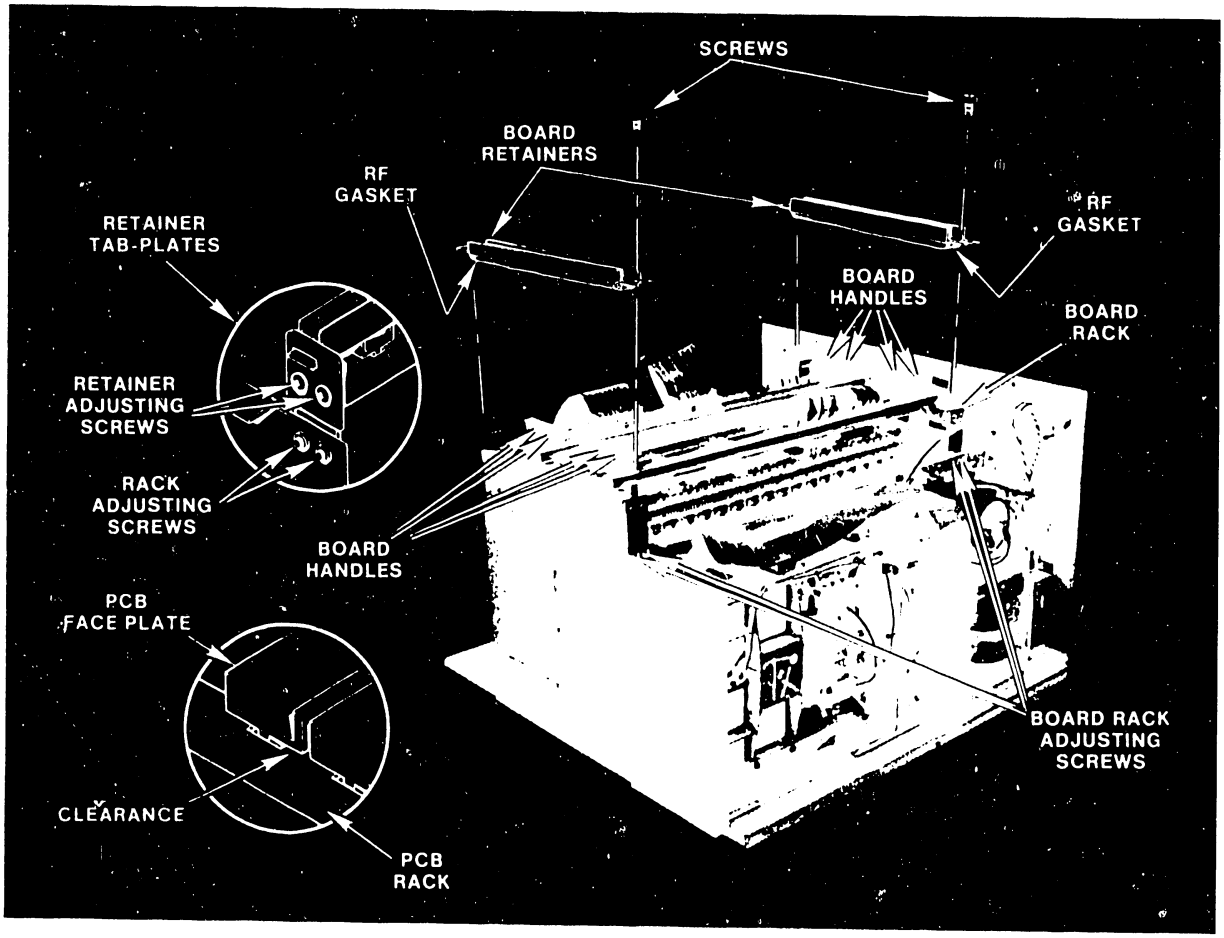

Figure 5-25. Adjusting the PCA Racks

5.3.3.2 Adjusting the Voltage Levels

The power supply measurement test points are located on the 7501-D board (CPU/MEM). The adjusting potentiometers are on the 7887-board (Regulator).

---------- CAUTION ----------
Avoid touching bare leads and causing a sort circuit: very little clearance is provided for these adjustments. Use the small slotted screwdriver with insulated shaft (WL #726-9406) for these voltage adjustments.
All PCAs must be inserted and the system drive connected and powered-on for these adjustments
---

A. Use a DVM (Digital Voltmeter) for all voltage measurements.
B. Position the power switch to 1 (ON).
C. Measure the d.c. voltages at the test points on the 7501-D board, using GND as reference.
D. If necessary, adjust the potentiometers on the 7887-board to bring the d.c. voltages within limits (Table 5-2).
E. The -12 volts cannot be adjusted: replace the 7887-board (Regulator) if this voltage is less than -15.0 Vdc or greater than -9.0 Vdc.

TABLE 5-2. DC VOLTAGE ADJUSTMENTS

TEST POINT	LIMITS(VDC)		ADJUSTMENT	TEST POINT	LIMITS(VDC)		ADJUSTMENT
+24	+23.5	+24.5	pot.	-5	-4.9	-5.1	pot.
-12	-15.0	-9.0	none	$+5V_1$	+4.9	+5.1	pot. **
+12	+11.75	+12.25	pot.	$+5V_2$	+4.9	+5.1	

** $5V_1$ and $5V_2$ are the same supply and are adjusted by the same pot.

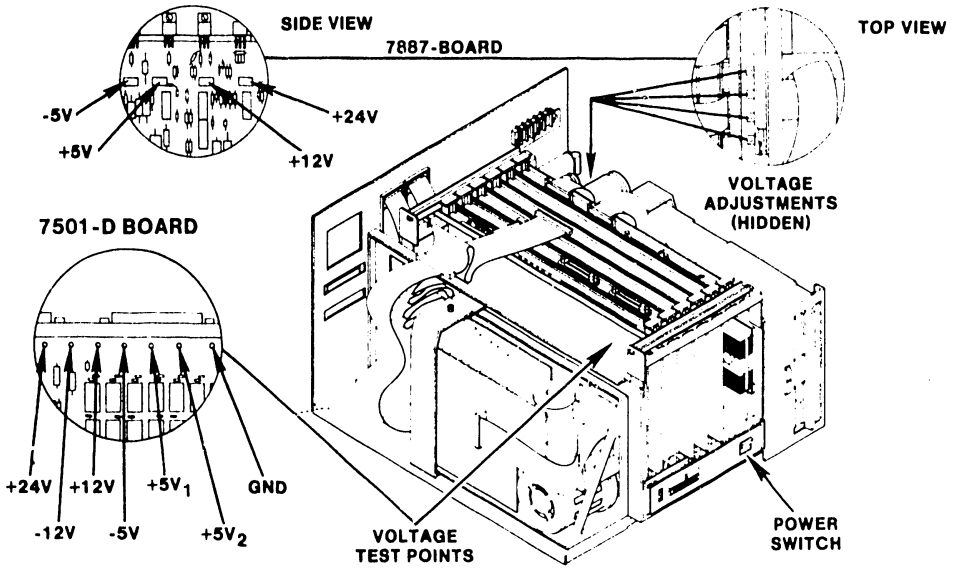

Figure 5-26. Adjusting the Voltage Levels

5.3.3.3 Aligning the Diskette Drive Unit

The diskette-drive alignment procedures for 140-class systems are set forth in WPNL No. 21, Shugart SA901 Diskette Drive Head Alignnment Procedure. If the facilities exist, follow the alignment procedures presented in this document.

In lieu of this alignment procedure, at least verify that the diskette drive is properly aligned. A suggested procedure follows:

A. Secure a known good diskette.
B. Access Word Processing.
C. Access Utilities.
D. Select and execute Duplicate Disk.
E. Verify that the diskette was read for duplication without error, or any re-tries.
F. If re-tries, or errors, were noted, replace the diskette drive.

CHAPTER 6 SCHE-MATICS

THE SCHEMATICS, WHEN AVAILABLE, ARE ON THE LAST FICHE IN THIS SET.

CHAPTER 7

ILLUSTRATED PARTS BREAKDOWN

CHAPTER 7

ILLUSTRATED PARTS BREAKDOWN

The Illustrated Parts Breakdown for the OIS 105/115/125A/130A-E Master Unit is presented in this chapter as follows:

TABLE 7-1 IPB INDEX

DESCRIPTION	ILLUSTRATION	PARTS LIST
Master Unit Disk Drives	Figure 7-1	-------
Top Cover Assembly	Figure 7-2	Table 7-2
Main Chassis Assembly	Figure 7-3	Table 7-3
Card Cage and Front Panel Assemblies	Figure 7-4	Table 7-4
Transformer Assembly	Figure 7-5	Table 7-5
Rear Panel Assembly	Figure 7-6	Table 7-6

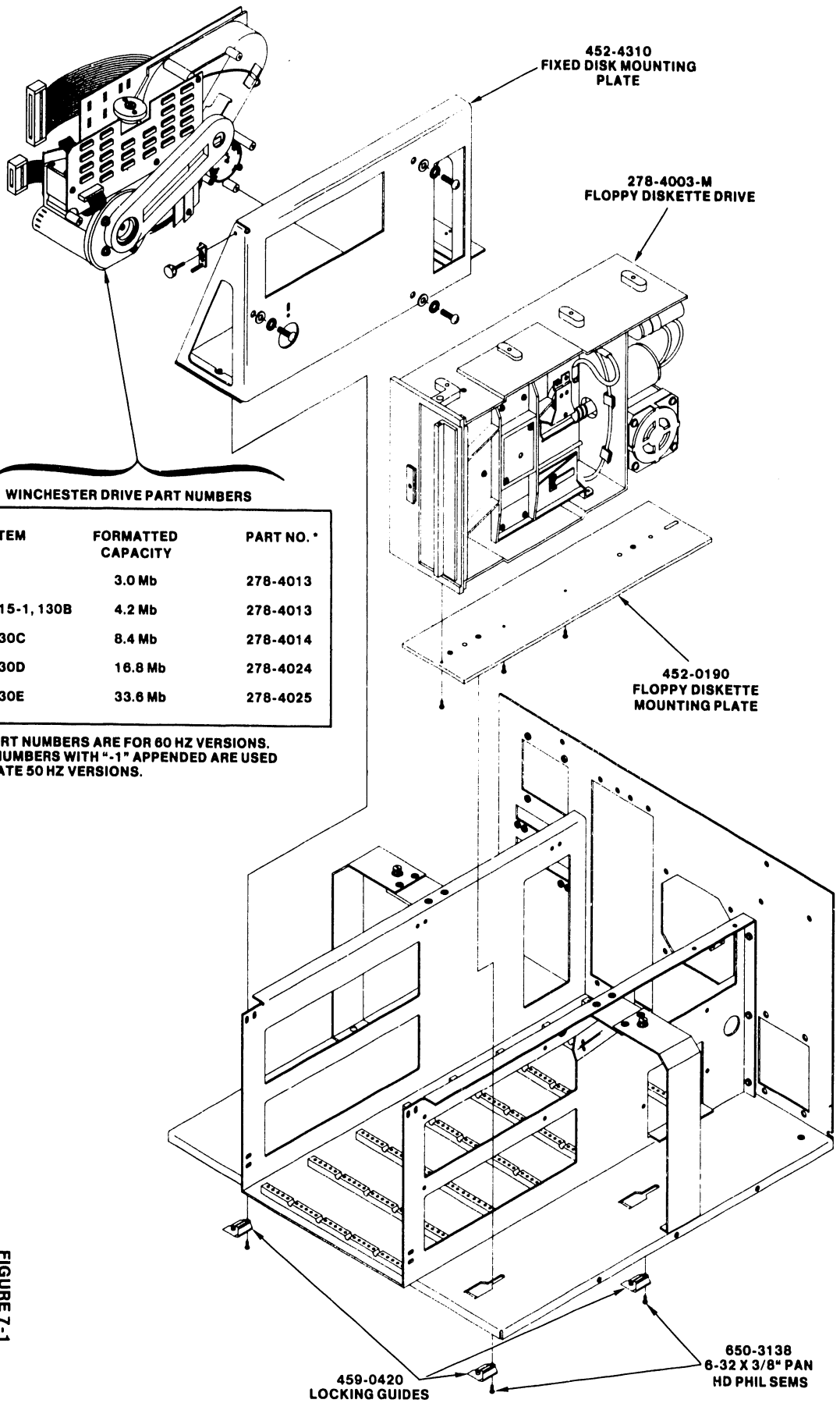

WINCHESTER DRIVE PART NUMBERS

OIS SYSTEM	FORMATTED CAPACITY	PART NO. *
105	3.0 Mb	278-4013
105-1, 115-1, 130B	4.2 Mb	278-4013
115-2, 130C	8.4 Mb	278-4014
115-3, 130D	16.8 Mb	278-4024
115-4, 130E	33.6 Mb	278-4025

* LISTED PART NUMBERS ARE FOR 60 HZ VERSIONS. THE SAME NUMBERS WITH "-1" APPENDED ARE USED TO DESIGNATE 50 HZ VERSIONS.

FIGURE 7-1
MASTER UNIT DISK DRIVES

5105

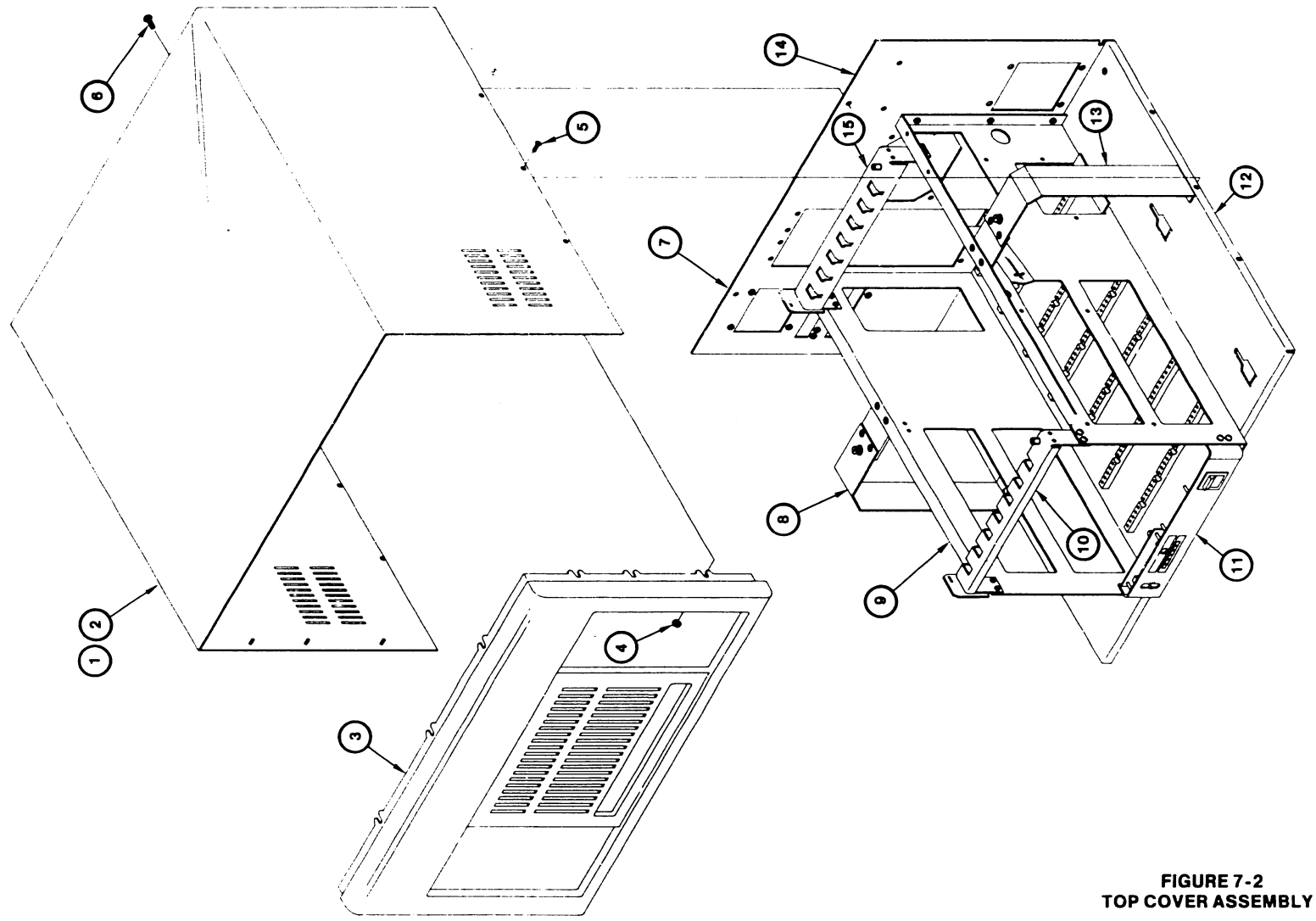

FIGURE 7-2
TOP COVER ASSEMBLY

TABLE 7-2 TOP COVER ASSEMBLY

ITEM	PART NO.	DESCRIPTION
1	279-4080	TOP COVER ASSEMBLY
2	458-0855	TOP COVER WELDMENT
3	450-0909	FRONT BEZEL
4	652-0029	8/32 LOCK NUT KEPS
5	650-3081	6-32 x 1/4 PHIL FLAT HD SCREW
6	650-3080	6-32 x 1/4 PAN HD PHIL SCREW
7	270-0695	MAIN CHASSIS ASSEMBLY
8	451-5108	PROTECTION BRACKET (FIXED DISK)
9	451-1148	U-CHASSIS
10	458-0942	CARD CAGE R.H. FRAME
11	270-0622	FRONT PANEL ASSEMBLY
12	279-1033	BOTTOM PAN ASSEMBLY
13	451-5005	PROTECTION BRACKET (FLOPPY)
14	451-3116	REAR PANEL SILKSCREEN
15	458-0943	CARD CAGE L.H. FRAME

TABLE 7-3 MAIN CHASSIS ASSEMBLY

ITEM	PART NO.	DESCRIPTION
	270-0695	MAIN CHASSIS ASSEMBLY
1	451-3116	REAR PANEL SILKSCREEN
2	458-0943	CARD CAGE L.H. FRAME
3	452-2681	FACEPLATE CLAMP
4	458-0942	CARD CAGE R.H. FRAME
5	451-5108	PROTECTION BRACKET (FIXED DISK)
6	449-0398	MOTHERBOARD SPACER BLOCK
7	451-1148	U CHASSIS
8	279-1033	BOTTOM PAN ASSEMBLY
9	451-5006	FLOPPY HOLD DOWN BRACKET
10	451-5005	PROTECTION BRACKET (FLOPPY)
11	654-1290	SNAP BUSHING

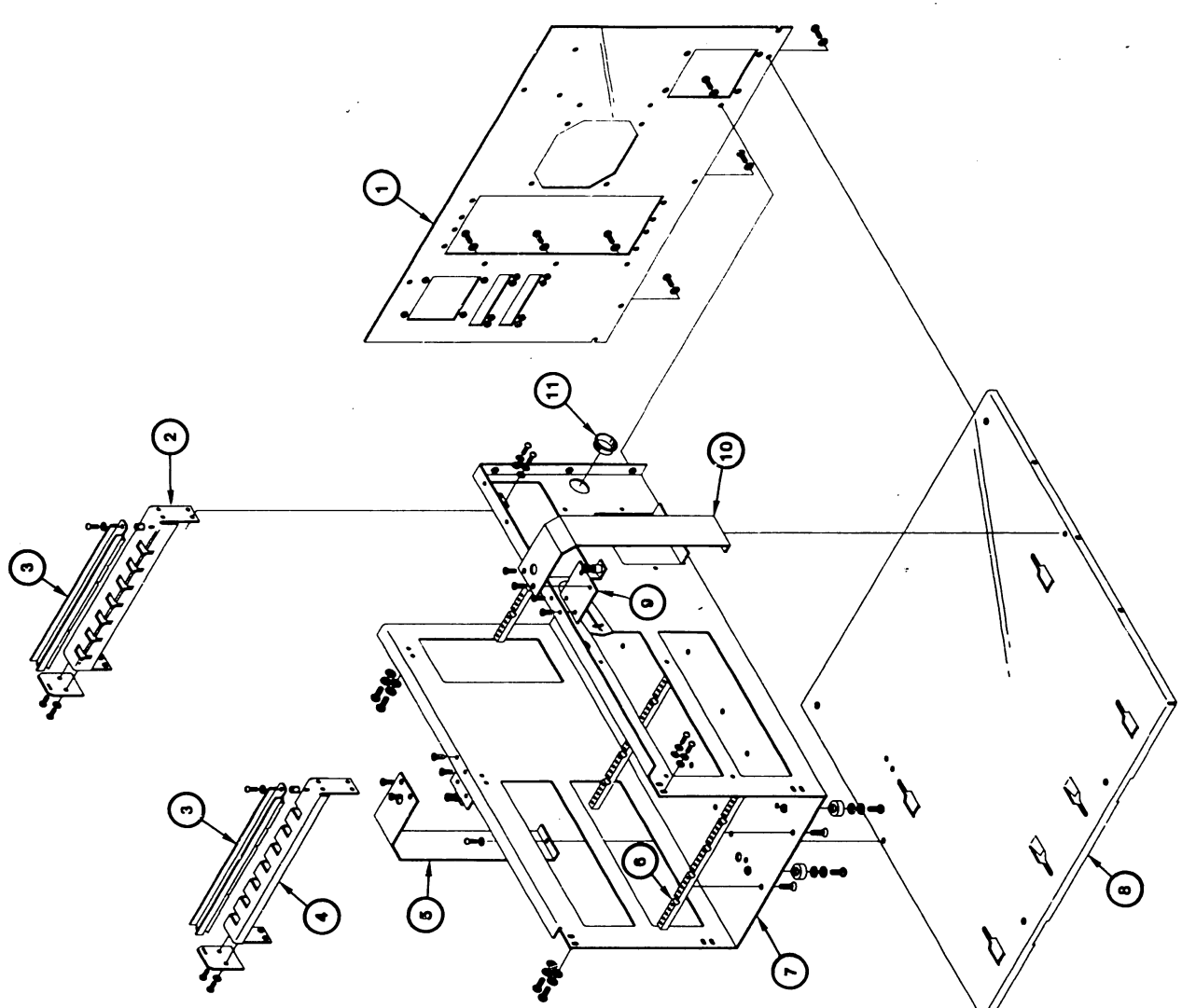

FiGURE 7-3
MAIN CHASSIS ASSEMBLY

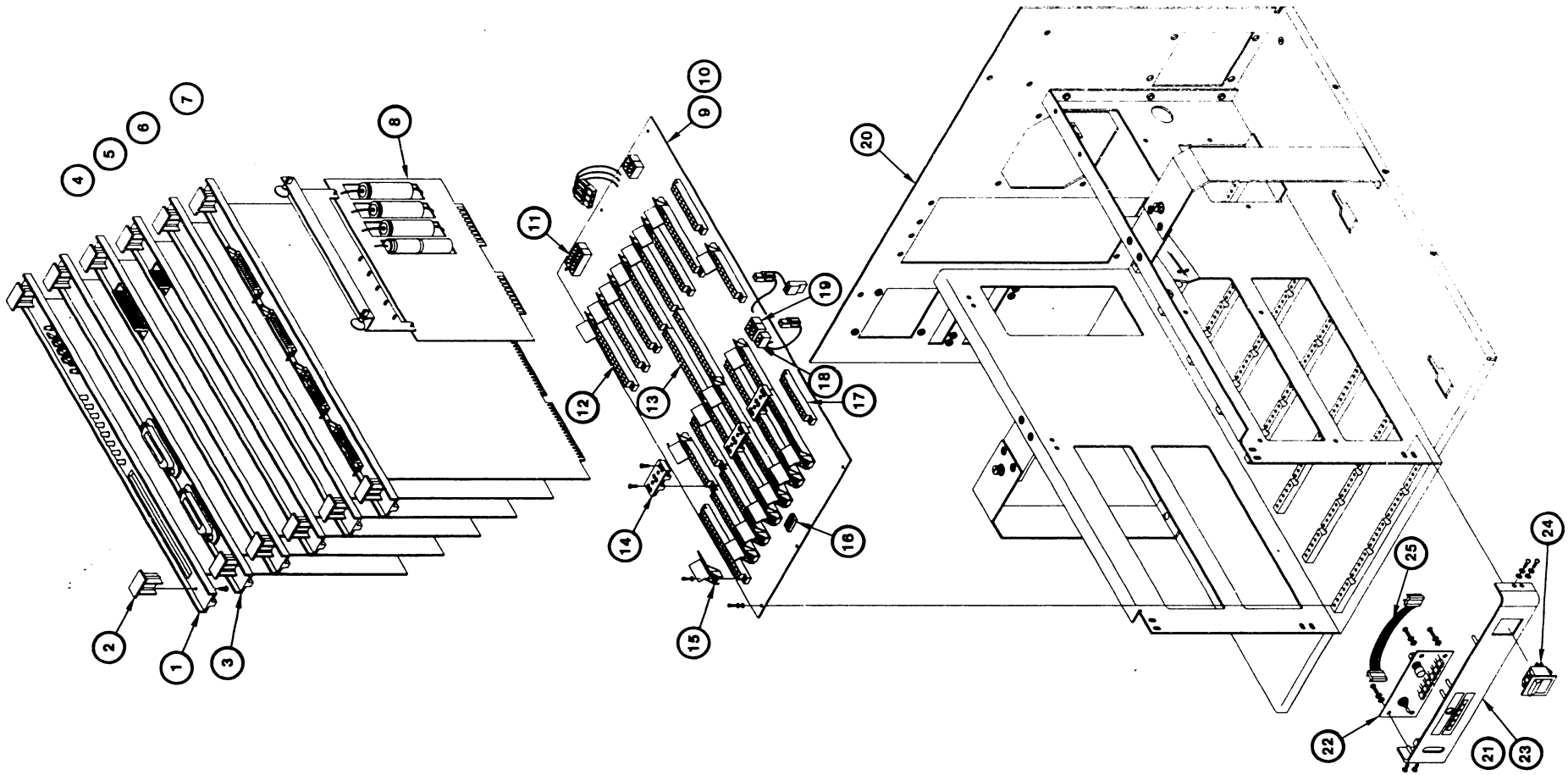

FIGURE 7-4
CARD CAGE AND FRONT PANEL ASSEMBLIES

TABLE 7-4 CARD CAGE AND FRONT PANEL ASSEMBLIES

ITEM	PART NO.	DESCRIPTION
1	210-7501-D	PCA OIS CPU/MEMORY BOARD
2	449-0247	FACEPLATE HANDLE
3	210-7502	PCA OIS 10 MEG/FLOPPY CONTROLLER
4 *	210-7950	PCA OIS WINCHESTER "B" CONTROLLER
5 *	210-7653-A	PCA OIS WINCHESTER "A" CONTROLLER
6	210-7503	PCA OIS DATA LINK CONTROLLER
7	210-7504-A	PCA OIS DATA BUFFER BOARD
8	210-7887	PCA OIS REGULATOR BOARD
9	270-0456	MOTHERBOARD ASSEMBLY
10	210-7649	PCA OIS MOTHERBOARD
11	654-1172	12 POS PIN HEADER ASSY (AMP)
12	350-0021	PC CONNECTOR SOLDER TYPE
13	350-0039	44 POS PC CONNECTOR SOLDER TYPE
14	449-0314	PCB STOP 3 POS. BLACK
15	449-0253	PC CARD GUIDE
16	376-9001	IC 14 PIN SOCKET SOLDER TAIL
17	350-0011	PC CONNECTOR SOLDER TYPE
18	654-1198	2 POS. PIN HEADER ASSY (AMP)
19	654-1186	6 POS. PIN HEADER ASSY (AMP)
20	270-0695	MAIN CHASSIS ASSEMBLY
21	270-0622	FRONT PANEL ASSEMBLY
22	210-7651	FRONT PANEL PCB
23	458-0857	CONTROL PANEL BRACKET
24	325-0059	DPST ROCKER SWITCH
25	220-3130	14 PIN FRONT PANEL CABLE

* ALL MODELS EXCEPT 125A, 130A. 210-7950 REPLACES EARLIER VERSION 210-7650.

TABLE 7-5 TRANSFORMER ASSEMBLY

ITEM	PART NO.	DESCRIPTION
1	270-0695	MAIN CHASSIS ASSEMBLY
2	270-3175	TRANSFORMER ASSEMBLY (50 HZ)
	270-3176	TRANSFORMER ASSEMBLY (60 HZ)
3	270-3176	TRANSFORMER HARNESS ASSEMBLY
4	270-0186	HEATSINK ASSEMBLY
5	325-2117	115/230 SLIDE SWITCH
6	451-7070	POWER SUPPLY BRACKET
7	300-3087	CAPACITOR 161K UF 10V
8	332-3010	RESISTOR, 1K OHM 10%
9	300-3074	CAPACITOR, 7300 UF 40V
10	300-3203	CAPACITOR, 4 UF, 660 VAC, 60 HZ
11	300-9024	CAPACITOR BOOT
12	300-9026	OVAL CAPACITOR CLAMP
13	300-9009	CAPACITOR CLAMP
14	300-9006	CAPACITOR CLAMP

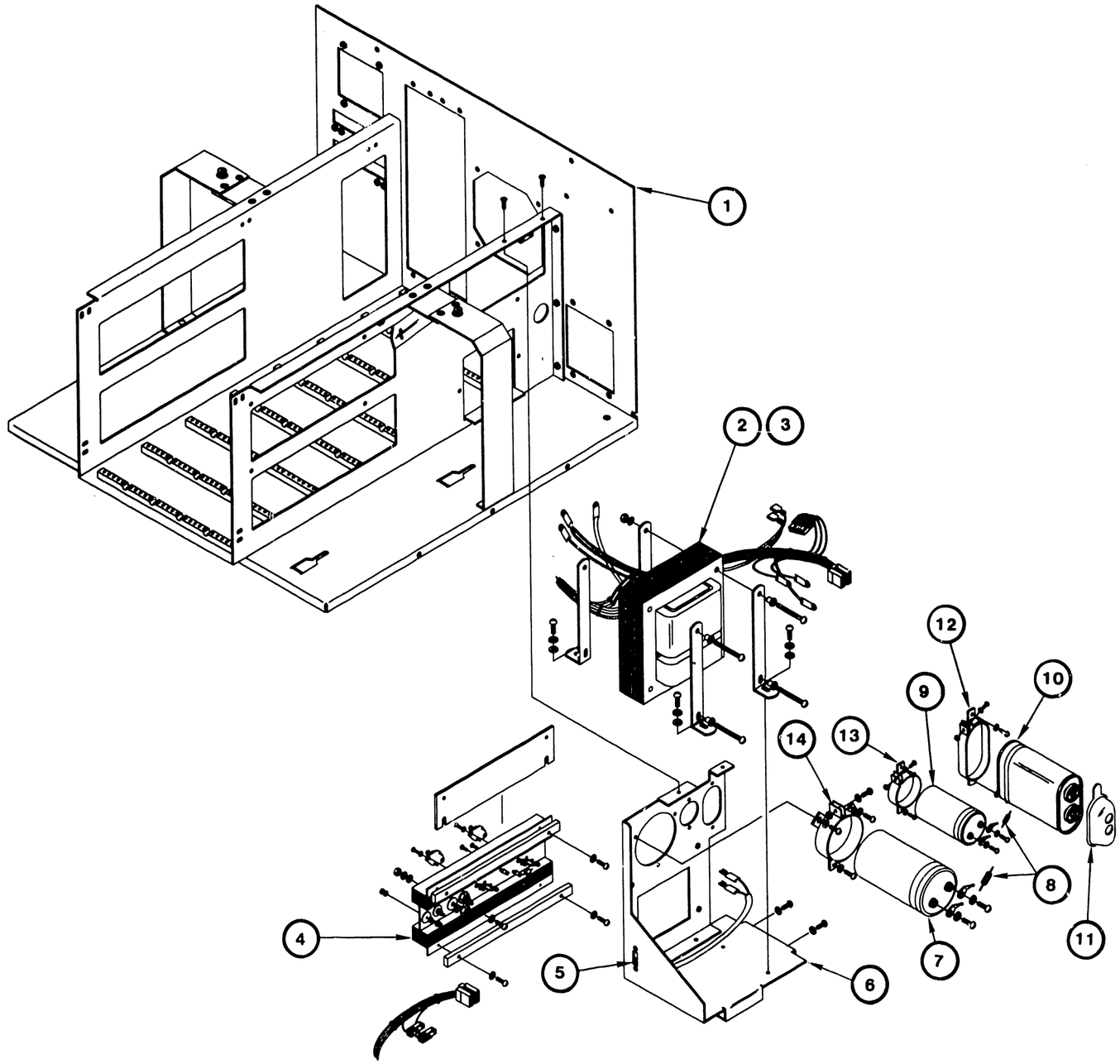

FIGURE 7-5
TRANSFORMER ASSEMBLY

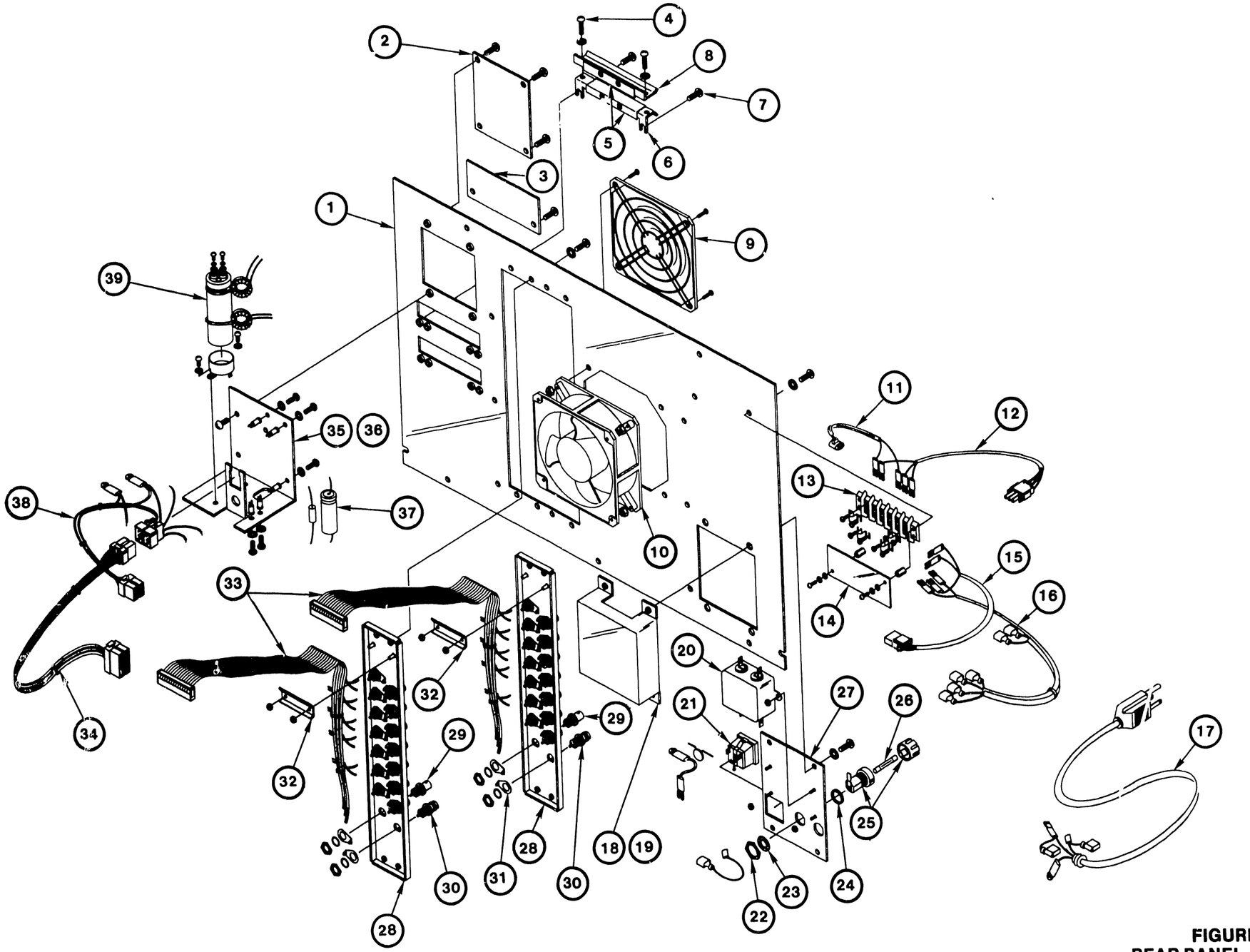

FIGURE 7-6
REAR PANEL ASSEMBLY

TABLE 7-6 REAR PANEL ASSEMBLY

ITEM	PART NO.	DESCRIPTION
1	451-3116	REAR PANEL SILKSCREEN
2	452-2194	TC BLANK PLATE
3	458-0854	BLANK FILLER PANEL
4 *	650-4160	SCREW 8-32 x 1/2" PAN HD PHIL SEMS
5 *	458-0786	CABLE CLAMP GROUND STRAP
6 *	458-0826	RIBBON RETAINER
7 *	650-4120	SCREW 8-32 x 3/8 SEMS
8 *	458-0829	CABLE CLAMP RETAINER
9	449-0101	FAN GUARD
10	400-1013	TUBEAXIAL FAN 115V 70 CFM
11	220-1536	FAN CORD
12	220-0258	FIXED DISK DRIVE POWER CABLE
13	310-1206	TERMINAL BLOCK
14	478-1029	TERMINAL BLOCK COVER
15	220-0263	FLOPPY DRIVE POWER CABLE
16	220-1459	POWER SWITCH CABLE
17	220-1462	POWER CORD ASSEMBLY
18	279-0374	POWER BOX ASSEMBLY
19	451-2334-XA	POWER BOX COVER
20	410-2005	5 AMP LINE FILTER
21	654-0074	AC RECEPTACLE
22	360-9002	HEX NUT
23	360-9003	LOCK WASHER
24	360-9000	RUBBER WASHER
25	360-0013	FUSE HOLDER
26	360-1051-SB	FUSE, 5.0 AMP 250V
27	451-3115	FILTER PANEL
28	279-0397	8 PORT CONNECTOR PLATE ASSY
**	279-0464	3 PORT CONNECTOR PLATE ASSY
***	451-3119	BLANK CONNECTOR PLATE
29	350-1036	BNC CONNECTOR
30	350-2078	TNC CONNECTOR
31	654-1011	3/8" GROUND LUG
32	452-2618	BNC/TNC CABLE CLAMP
33	220-3128	8 PORT ADAPTER CABLE
34	220-1521	LOW VOLTAGE POWER CABLE
35 ****	270-0790	DISK DRIVE FILTER ASSEMBLY
36	451-5113	CAPACITOR BRACKET
37	300-3053	ELECTROLYTIC CAPACITOR, 500 uF 50V
38	220-1611	DISK DRIVE POWER FILTER CABLE
39	300-3068	ELECTROLYTIC CAP, 8.2K uF 25V

* OIS 125A/130A-E ONLY
** OIS 105, 105-1 ONLY
*** OIS 105/115 ONLY
**** SHUGART FIXED DISK MODELS ONLY

CHAPTER 8

TROUBLE-SHOOTING

CHAPTER 8

TROUBLESHOOTING

8.1 GENERAL

Efficient troubleshooting depends primarily upon three factors:

1. Knowledge of design, operation, and potential malfunctions of the equipment.
2. "Common-sense" reasoning.
3. Proper test equipment and knowledge of its application.

Item 1 has been discussed in the preceeding chapters and, most especially, in the OIS training course. For greatest proficiency, however, this knowledge must be supplemented by practical experience. Item 2 is a prime ingredient which makes the difference between first-rate Field Service and that which is just mediocre. Item 3 is also important, but it should be remembered that many problems can be resolved using very simple test equipment, or, in many cases, no test equipment at all.

The proficient Field Service Technician evaluates all the evidence available; he/she then proceeds from the most obvious to the less obvious causes until the disorder is located. There are 3 methods for collecting the necessary evidence -- observation of the equipment, diagnostic aids, and test measurements.

Fortunately, observation usually provides enough information to allow the trouble to be isolated at least to a unit of equipment. The value of observation cannot be overstressed: often simple observations will identify the trouble at once; resulting in a quick service call without involved investigation at the customer's site. For example, the distinctive smell of melted transformer wax, varnish, or other component odors is familiar to the experienced technician and may pinpoint the defective component as well as the unit of equipment.

Extensive diagnostic aids are provided for the OIS systems. Fault-lights, diagnostic switches, and semi-automated tests furnish the Field Service Technician with detailed evidence. PROM-based diagnostics are exercised whenever the system is powered-on or IPLed. These usually provide sufficiently detailed evidence to isolate the trouble to a field-replaceable unit. More evidence, if needed, is available via the Master Monitor Diagnostic and Online Device Monitor.

Sometimes measurements are needed to make adjustments or actually test the defective component. Extensive diagnostic measurements at the customer's site, however, should be kept to a minimum.

1. Obtain the customer's full story of the complaint.
2. Observe the equipment, cabling, panel indicators, cabinetry, and CRT-screen for obvious indications (CRT prompts, poor power-plug connection, etc.).
3. Check all controls and switches.

4. Analyze the evidence from all sources to localize the trouble to an item of equipment (Master Processor, workstation, disk drive unit, etc.).
5. Utilize the diagnostic aids to further localize the trouble to a replaceable assembly.

8.2 LEVEL OF REPAIR

Repair of OIS 105/115/125A/130A-E systems is at the "board replacement level"; i.e., only major assemblies will be replaced at the customer's site. Those assemblies designed for field replacement are listed in Table 5-1.

8.3 TROUBLESHOOTING AIDS FOR THE MASTER PROCESSOR

8.3.1 Power-Up (PROM) Diagnostic

The Power-up diagnostic resides in PROM and checks the system integrity each time the Master Processor is powered-up or reset. This diagnostic takes approximately 15 seconds to complete. The primary use of this Power-Up diagnostic at the field level is for the isolation of board failures within the OIS Master Unit. Fault isolation is accomplished through the use of error codes displayed on the Master Unit's front panel LEDs. These error codes are either termed "non-fatal", indicating faulty operating procedures, or "fatal", indicating faulty circuit boards. Corrections or repairs, if required, may be performed by Customer Engineering personnel.

This diagnostic also provides both Detailed and Expanded Error information via error codes displayed on the eight LED indicators present on the CPU/MEM board. This additional error information can be used in the field to aid in the isolation of those problems that are not readily resolved by direct replacement of suspected faulty board(s).

Fault isolation beyond board level is possible in the case of the CPU/MEM board. With the use of diagnostic switches on the top of this board, Expanded Error information is available to correct CPU/MEM board problems by isolating faulty memory chips.

A complete guide for the proper use of the OIS 140-Class Power-Up Diagnostic is presented in Appendix D. This Appendix discusses the 64K CPU version, while Appendix E describes the differences associated with the 128K Extended Memory Power-Up Diagnostic.

8.3.2 Operating System Error Messages

The Operating System will display 4 types of error messages on the CRT screen:

1. Screen Package DEBUG error messages
2. Word Processing Error Handler messages
3. Request Control Block (RCB) error messages.
4. Additional error and warning messages.

These CRT error messages are explained in detail in Appendix B.

8.3.3 Master Diagnostic Monitor

The OIS 140-Class Master Diagnostic Monitor (702-0057) is completely contained on a single floppy diskette. General use of this diagnostic at the field level is anticipated for situations where the PROM-based Power-Up Diagnostics fail to isolate a board or assembly failure; this is especially true in the case of a suspected intermittent failure. In addition, this diagnostic can be used for confidence testing, quickly establishing that all device components operate properly.

Once the Master Diagnostic Monitor diskette is IPLed via the Master Processor floppy diskette drive, the operator can select, execute, control, and monitor desired combinations of various diagnostic test programs.

The literature accompanying the Master Monotor diskette presents a complete guide for the software-related tasks required to perform the OIS 140-Class Master Diagnostics Monitor package.

8.3.4 SYSEX15

SYSEX15 (702-0127) is a diskette-based system exerciser which allows simultaneous exercising of each major logic board in the master processor plus some logic in attached slaves. It generates a large amount of random activity on selected disk drives. They are very useful for system checkout, as slave memory may be used to perform some of the read, write, or random read operations.

8.3.5 Online Diagnostics

At the time of publication for this manual, The following list represents all currently available online diagnostics for the OIS 105/115/125A/130A-E systems:

OIS Online Device Monitor	(702-0174)
OIS Online Device Part I	(702-0200)
OIS Online Printer Part I	(702-0176)
OIS Online Printer Part II	(702-0149)

8.3.6 Software Procedures

The OIS Supervisor Procedures Manual (700-5562) presents a complete guide for the software-related tasks required to perform the OIS 105/115/125A/130A-E Software Initialization and Post-Installation Software updates.

Software Installation is normally a Customer Service Analyst function. The procedure is included in this manual for cases where it has been determined that Customer Engineering should perform this task.

8.4 TROUBLESHOOTING FLOWCHARTS

The troubleshooting flowcharts provided on the following pages are intended to aid in the systematic investigation, diagnosis, and repair of failures common to all OIS 105/115/125A/130A-E Master Processors.

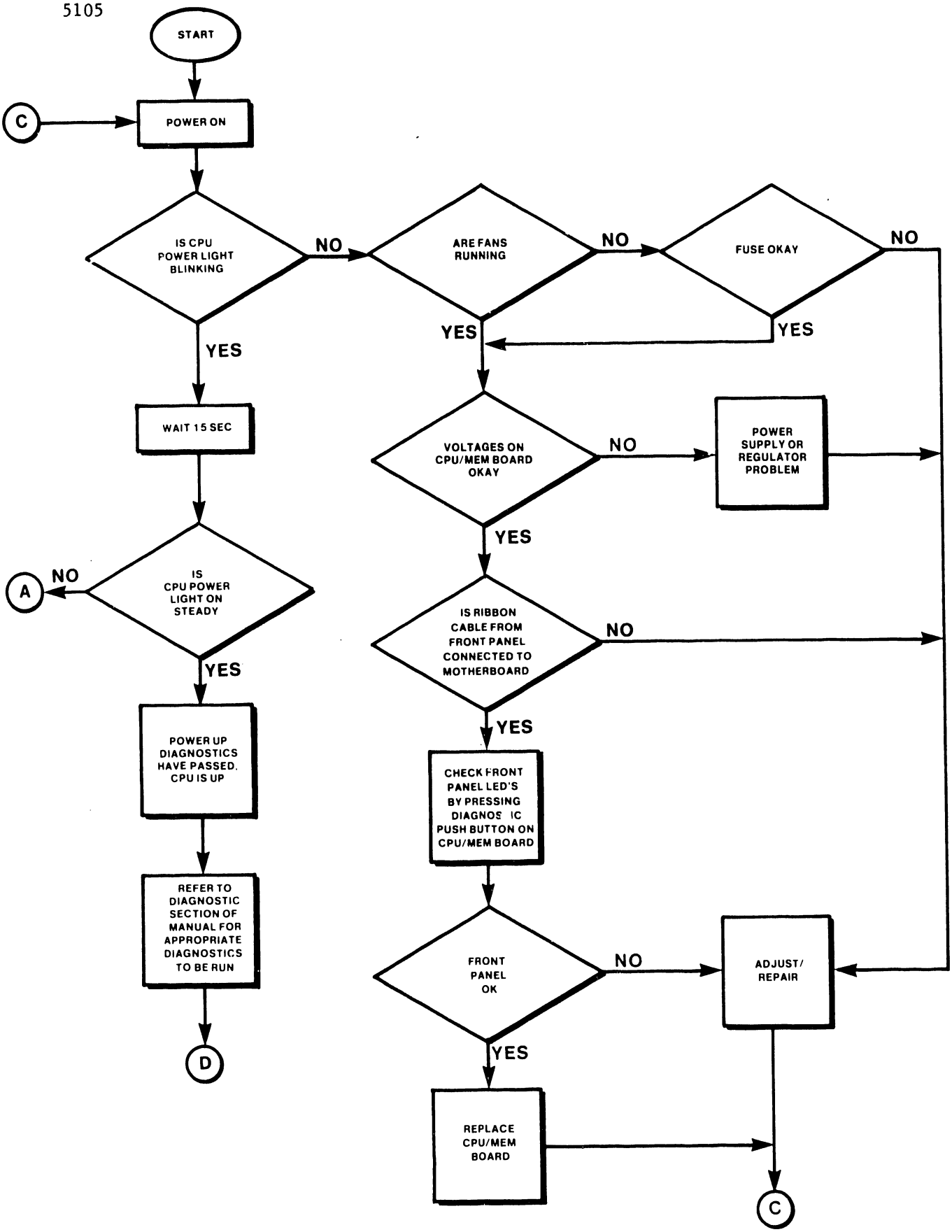

Figure 8-1. Troubleshooting Flowchart for Master Unit Common Failures

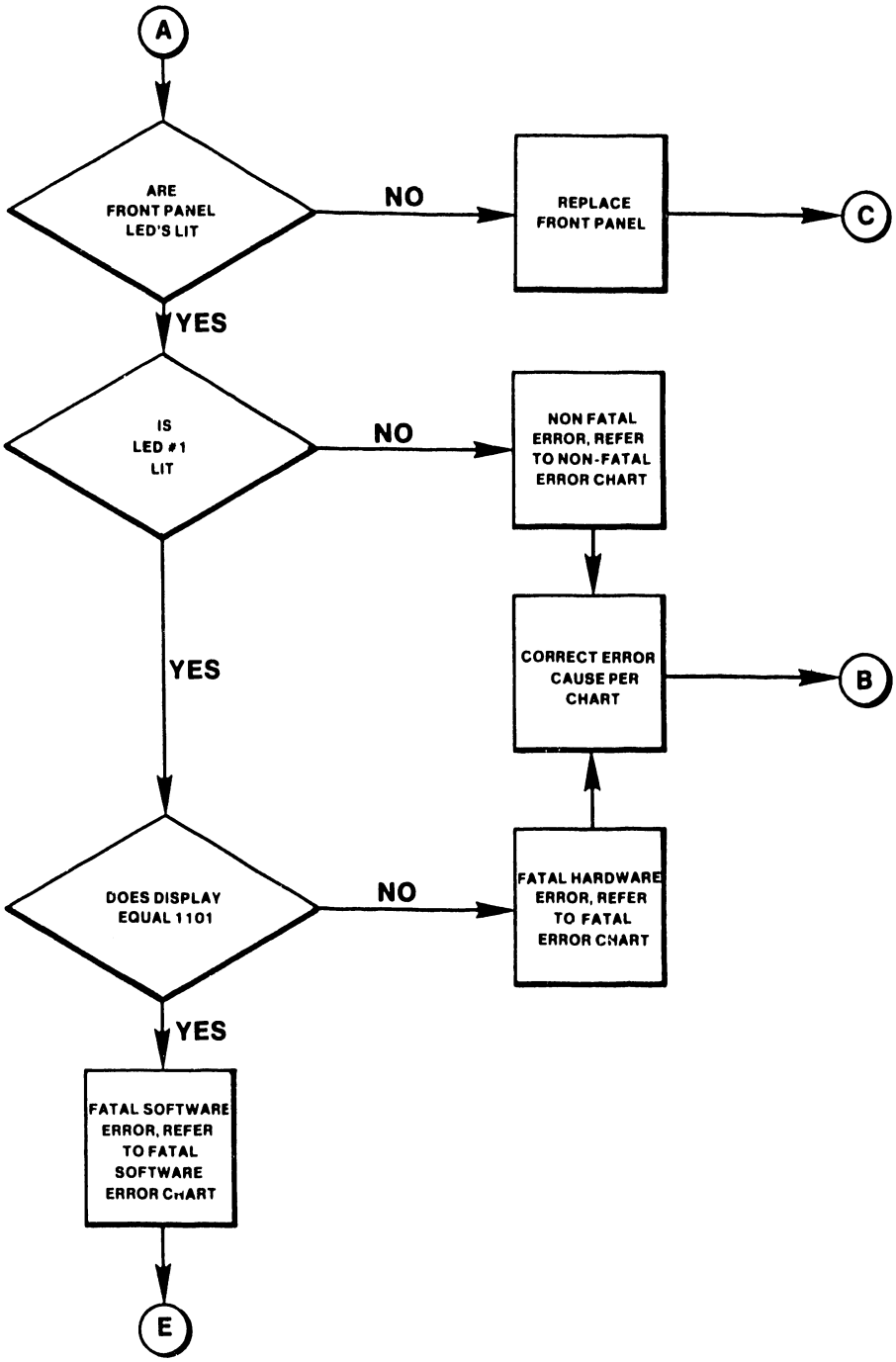

Figure 8-1. continued

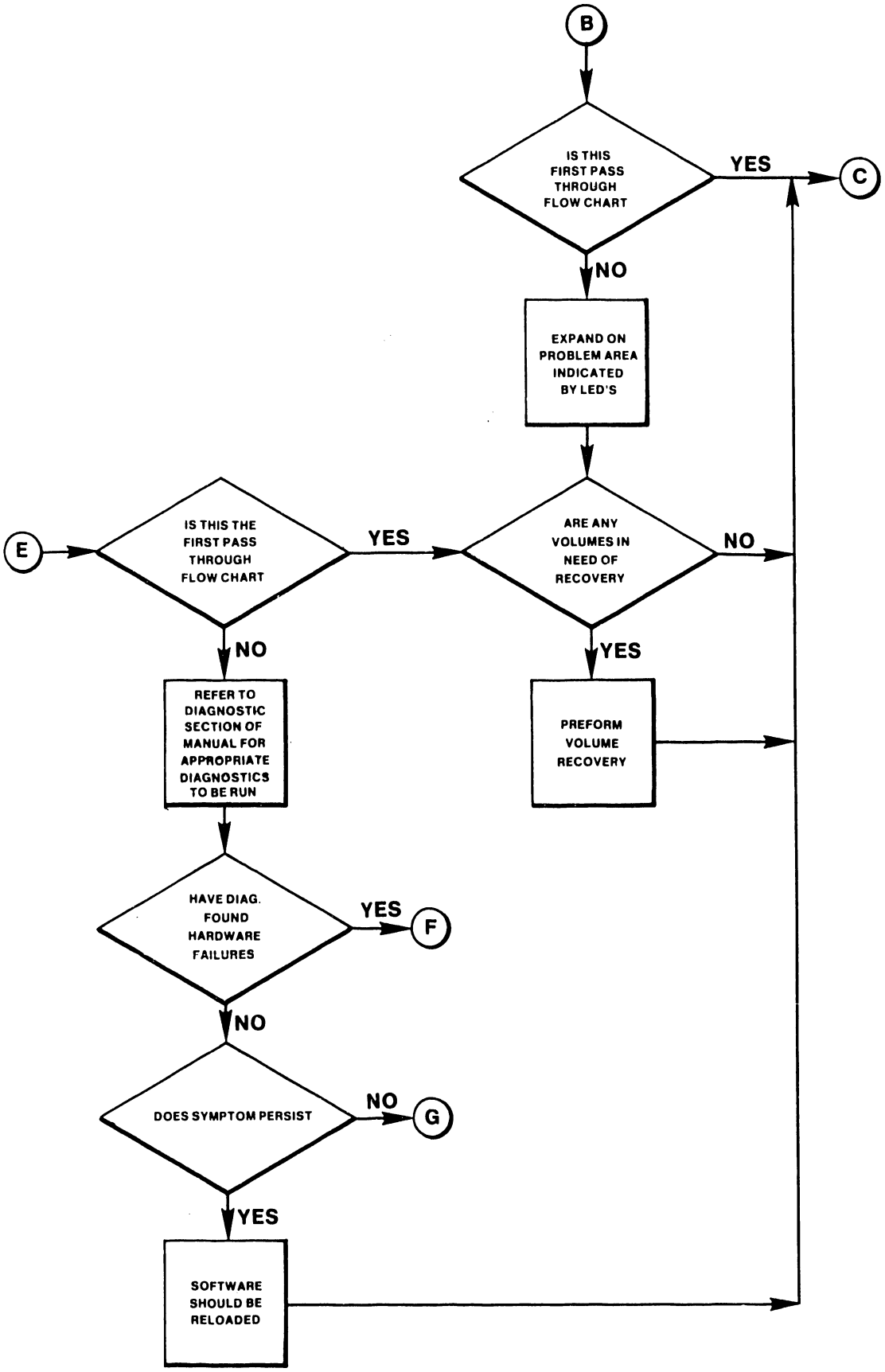

Figure 8-1. continued

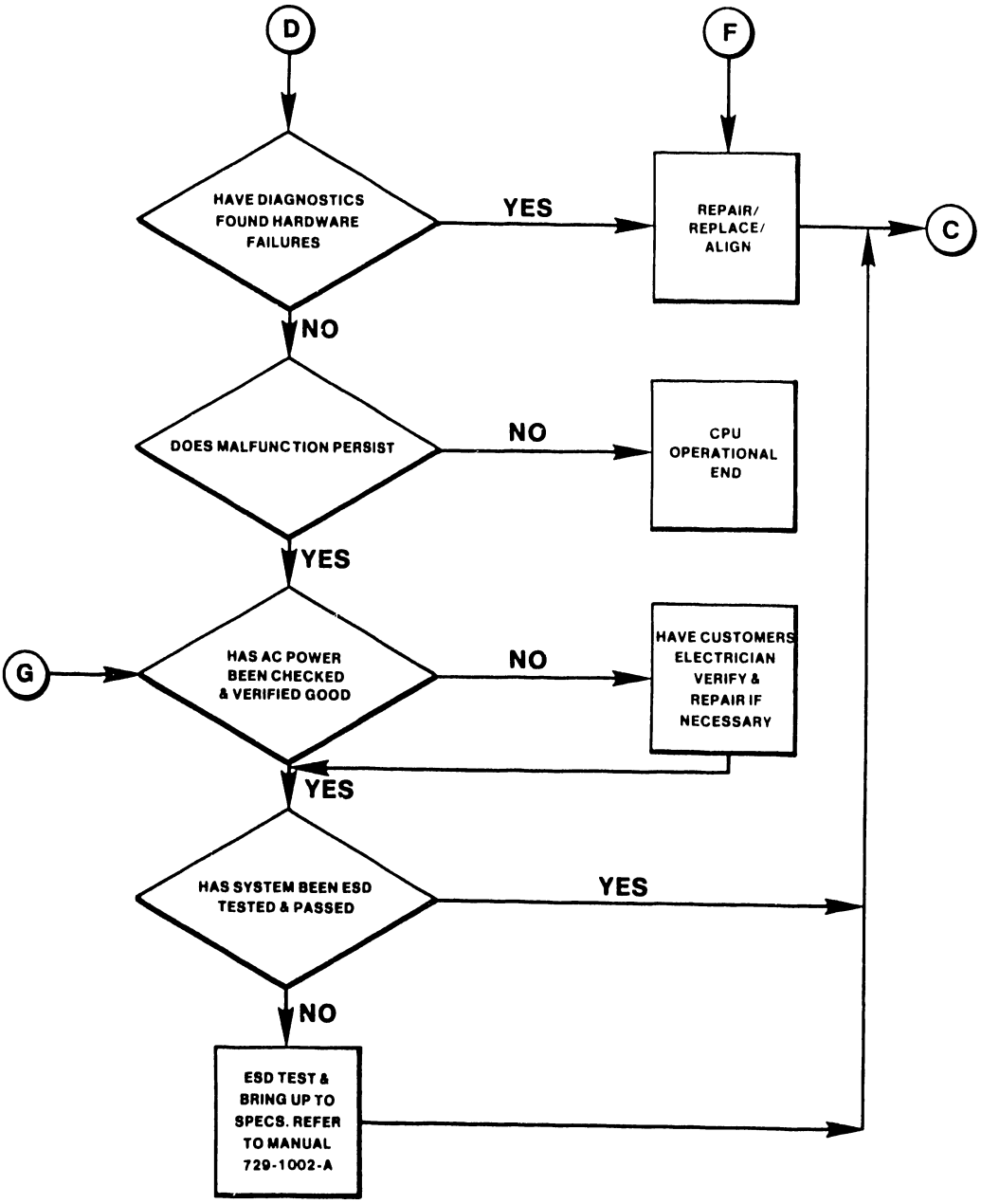

Figure 8-1. continued

APPENDIX A

UPGRADE KIT INFOR-MATION

APPENDIX A

UPGRADE KIT INFORMATION

The following list provides UJ upgrade kit numbers for upgrading various systems in the OIS line:

UJ NUMBER	SYSTEM UPGRADE	UJ NUMBER	SYSTEM UPGRADE
UJ-1174	105 to 105-1	UJ-1184	115-2 to 115-3
UJ-1040	105 to 105-2	UJ-1185	115-2 to 115-4
UJ-1175	105 to 105-3	UJ-1046	115-2 to 130A
UJ-1176	105 to 105-4	UJ-1047	115-2 to 130C
UJ-1041	105 to 130A	UJ-2038	115-2 to 140-1
UJ-1042	105 to 130B	UJ-2039	115-2 to 140-2
UJ-2030	105-1 to 140-1	UJ-2040	115-2 to 140-3
UJ-2031	105-1 to 140-2	UJ-2041	115-2 to 145
UJ-2032	105-1 to 140-3	UJ-1186	115-3 to 115-4
UJ-2033	105-1 to 140-5	UJ-1187	115-3 to 130A
UJ-1177	105-1 to 115-2	UJ-1188	115-3 to 130D
UJ-1178	105-1 to 115-3	UJ-2120	115-3 to 140-1
UJ-1179	105-1 to 115-4	UJ-2121	115-3 to 140-2
UJ-1180	105-1 to 130A	UJ-2122	115-3 to 140-3
UJ-1181	105-1 to 130B	UJ-2123	115-3 to 145
UJ-1043	115-1 to 115-2	UJ-1189	115-4 to 130A
UJ-1182	115-1 to 115-3	UJ-1188	115-4 to 130D
UJ-1183	115-1 to 115-4	UJ-2120	115-4 to 140-1
UJ-1044	115-1 to 130A	UJ-2121	115-4 to 140-2
UJ-1045	115-1 to 130B	UJ-2122	115-4 to 140-3
UJ-2034	115-1 to 140-1	UJ-2123	115-4 to 145
UJ-2035	115-1 to 140-2		
UJ-2036	115-1 to 140-3		
UJ-2037	115-1 to 145		

APPENDIX B
SYSTEM ERROR MESSAGES

APPENDIX B

SYSTEM ERROR MESSAGES

B.1 INTRODUCTION

The OIS Operating System presents error messages on the CRT in one of the following 4 types:

1. Screen Package DEBUG error messages. (Table B-1.)
2. Word Processing Error Handler messages. (Table B-2.)
3. Request Control Block (RCB) error messages. (Table B-3.)
4. Additional error and warning messages. (Table B-4.)

B.2 SCREEN PACKAGE DEBUG ERROR MESSAGES

---------- NOTE ----------
At present, these error messages are being revised.

TABLE B-1. SCREEN PACKAGE DEBUG ERROR MESSAGES

ERROR CODE	MEANING
A	Message row invalid
B	Message column invalid
C	Message will not fit on the screen
D	Buffer data larger than display area
E	Msgnr* does not start with stx**
F	Invalid character in msgnr message
G	Invalid character in buffer area
H	Cannot load message module
I	Screen clear request invalid
J	Invalid Link Table
K	Invalid offset or choice pointer value
L	More than 16 error messages (stack overflow)
M	Invalid date mask

* Message number
** Start of message text flag

B.3 WORD PROCESSING ERROR HANDLER MESSAGES

Table B-2 explains the messages and suggested methods for recovery.

TABLE B-2. ERROR HANDLER MESSAGES

ERROR MESSAGE	MEANING
File access conflict	A workstation is tying up a file which is necessary to Word Processing. Since this may be only a momentary problem, first simply retry the whole operation from scratch. Request that all the workstations return to the main WP menu and retry the operation. If that fails, try entering SHIFT-CANCEL at each workstation. (If it is possible to isolate the workstation which is tying up the file, then it may be necessary to IPL only that workstation.) Only as a last resort should the Master Processor be IPLed.
Master Processor overload	This message indicates that there are too many files open. Try the same procedure indicated for a "File access conflict".
Lock-out on shared files	This is similar to "file access conflict". The same procedure is recommended.
File not found on volume	A file necessary to Word Processing is missing. If it is one which is copied to the WPS during installation, it may be possible to retrieve it from the Installation Disk. If it is a document, check to see if the volume for that library has been changed. Otherwise this should be considered a software error.
Volume not found	Word Processing is expecting a particular volume to be mounted, and cannot find it. (In most cases the volume name will be contained within the file name displayed.) Check all the drives to be sure that the correct volumes are mounted, then retry the operation.
No disk in drive	This indicates almost the same problem as above, although it refers to operations usually performed on floppy disks. Check all the drives to be sure that the disks are mounted properly.
System residence volume space exhausted	The "system" volume is full of files. Archiving documents from libraries found on the system volume will remedy this.

TABLE B-2 (continued). ERROR HANDLER MESSAGES

ERROR MESSAGE	MEANING
Volume space exhausted	This is the same problem as above, but the disk is not the "System" volume. If the volume is a floppy disk, it will be necessary to delete documents (files); otherwise the procedures described above are recommended.
Drive not ready	Ensure that all the drives are powered up properly.
Drive write protected	Check to see that the buttons on the front panel of the regular disk drives are not set to "write protect", and that the write-enabling tab is in place on any floppy disks being used.
Data transmission error	This indicates a true hardware error.
Disk format error	This could be either a software or a hardware error.
Equipment malfunction	This indicates a true hardware error.
Slave parity error	A parity error occurred when writing to the workstation memory. This is a hardware error.
Data link	A parity error occurred when writing to the workstation memory. This is a hardware error.
Parameter error	This is a programming error.
Drive dropped ready	Ensure that the disks are correctly powered-up and that the Fault light (on disk drive) is not on.
All others	Consider to be fatal errors.

B.4 REQUEST CONTROL BLOCK ERROR MESSAGES

If the error is so disabling that the Word Processing Error Handler cannot be invoked, then the following message format is displayed on the CRT screen.

```
--------------------------- NOTE ---------------------------
Copy the message before touching any key: touching any key
causes the message to be erased.
------------------------------------------------  ---------
```

```
Fatal I/O Error   RCB=(xxyy0000  00000000  00zz0000  00000000)  Press Any Key

           Request Code              Hardware Error Code if status code = X'08'.
                       Status Code
```

The error message while in WP Mode has the form:

```
          *** xx  *** yy zz, or        System error codes : xxyyzz
```

Explanations of these codes are presented in Tables B-3, 4, and 5.

TABLE B-3. REQUEST CODES

CODE xx	MEANING
00	OPEN--open file
01	READ--read sectors from a file
02	WRITE--write sectors to a file
03	CATALOG--change name of a file
04	CLOSE--terminates access to a file
05	OPEN CAT--provides scratch file containing information of a chosen subtree of a catalog
06	READ-LOCK--read lock sectors from a file opened with shared access
07	SET-EOF--reset the end of a file opened for read/write access
08	REOPEN--access to a file which is open may be changed without closeing-read only-read/write-shared
09	OPEN-DC--open drive for direct control
0A	DIRECT I/O--enables slave to perform any physical operation on the disk*
0B	LOCK--locks sectors from a file open with shared access so a write operation can be performed*
0C	GET-FILE-NAME--allows sequential steping through names of files on a volume
0D	FILE-LOCK--locks the entire file for exclusive use by the requesting slave*
0E	FILE-UNLOCK--unlocks the file from exclusive use*
0F	ASSIGN-PASSWORD--used to place/replace or remove passwords on nodes of the catalog
10	OPEN-DCS (Model 40 & XMM only)**--slave direct access to the memory of another slave as well as control of the slave

* Receives no hardware I/O error

** Model 40 includes OIS-105/115/125A/130A-E, OIS-140, and OIS-145. XMM refers to Extended Memory Master.

TABLE B-4. STATUS CODES

CODE yy	MEANING
01	Reference Number not valid, or Name node not found on volume.
02	Buffer not on page boundary, or Name string indicates a file-Access conflict, or Address drive is not available, or End of catalog.
03	File not open with write access, read/write access, shared acesss, or Volume not mounted, or No disk in drive, or Slave not open for direct control, or RN not for direct control disk, or Slave not available.
04	Invalid file segment specified (out of bounds), or Name string format error, or Insufficient space on volume to increase file size to that request, or Password string format error.
05	Lock-out (shared files only), or Tree structure error, or File not open for shared read/write access.
06	Segment not previously lock (shared file only), or Buffer not on page boundary, or Password incorerect or not provided.
07	Volume name is incorrect, or Master processor overloaded, or Invalid new password.
08	Permanent I/O error.
09	Invalid request option specified.
0A	Catalog damaged.
0B	VAU Map damaged.
0C	Insufficient space on volume to create file prologue sector.
0D*	System not found (WISE systems only).
0E*	File source connection broken (External File Source software option only).
80	Successful.
81	Successful, less than requested sectors read/written (System Residence Volume space exhausted, end-of-file encountered).

TABLE B-5. HARDWARE ERROR CODES

CODE zz	MEANING
01	Drive not ready
02	Drive is write protected
03	CRC or non-correctable ECC error
04	Format error/header error
05	Equipment malfunction error
06	Parity error (reading slave memory)
07	Data-link error (writing slave memory)
08	Programming error
09	Drive dropped power during operation
0A	Slave not available
0B	Slave dropped power during operation or Master Data Link error
0C	Write-check compare error (Model 40 & XMM only)**

* Applies to Operation Systems 4.4, 5.1, or above.

** Model 40 includes OIS-105/115/125A/130A-E, OIS-140, and OIS-145. XMM refers to Extended Memory Master.

B.5 ADDITIONAL ERROR AND WARNING MESSAGES

Table B-6 includes some of the ERROR and WARNING messages the operator will encounter during the DOS software implementation and operations contained in this document.

TABLE B-6. ADDITIONAL ERROR AND WARNING MESSAGES

ERROR MESSAGE	MEANING
Access Conflict, Input File	Displayed next to the file name if the file is in use during during a Copy Mode. These file names should be noted and the file copied later.
Answer all Questions	Before the system will accept the EXECUTE command, all fields on the menu must be completed.
Cannot Make Copy-- Insufficient Space	The Volume is full, delete files to continue.
Cannot Read Catalog File	The system cannot access the catalog file; the system disk is full. Archive or delete documents/files from the system.
Cannot Read Print Job File	The system cannot print the file because it has been deleted or it is in use.
Cannot Reserve Requested Drive	The drive is being accessed from another workstation and it is not available for mounting or dismounting a disk at this time.
Catalog Damaged	The system disk has been damaged and cannot be cataloged. Try Volume Recovery procedures through the Volume Utilities.
Could Not Cancel Active Job	The job is being processed at another device.
Disk I/O Error	Indicates a system error. Reset the system.
Drive is Not Available	Indicates that the drive is in use and cannot be accessed at this time.
Error Found When Opening Catalog	The Input Name String has been entered incorrectly. Reenter it, using the correct syntax.
Error Initializing Disk	Indicates a Format error, or a bad sector on the disk. Try the process again, if the same message appears, try another disk.

TABLE B-6 (continued). ADDITIONAL ERROR AND WARNING MESSAGES

ERROR MESSAGE	MEANING
File Not Found	The system has searched and has not found the named file on the Volume. Check to see that the name string has been entered correctly and that it's Volume is logically mounted.
Invalid Character in Field	Letters and Numbers Only Volume names, library names and passwords cannot contain any symbol other than uppercase letters, lower case letters or numbers 0-9.
Invalid Key, Ignored	A typographical error or illegal response has been entered. Reenter and press EXECUTE.
Invalid Page	The Print Thru Page number entered in the Print Document field does not exist in the document; this number cannot be higher than the last page of the document.
Invalid Partial File Name	The input name has been entered incorrectly. Check that it is in the correct DOS name string syntax and that it is a partial file name (volume and/or library only).
Named Mode Not Found on Volume	Indicates that the file has been deleted, the file name entered incorrectly, or the wrong volume has been accessed.
Name String Format Error	The name string has not been entered in the correct name string syntax: VOLUME1:DOCUMENT.A.12.34.
No Disk in Drive	The system does not recognize any volume at the designated address. Check to see if disk is mounted.
Prototype Document	This message means that the library prototype does not exist. It can be created using the Create Library Function.
Password Error	An error was made entering the password. Try again, or check that the Volume being requested is correct.
Unable to Rename File	Error in the Input Name String such as the wrong number of nodes or an illegal character.
Volume Not Mounted	Volume cannot be accessed until it is logically mounted. Mount the volume using the Volume Utility Mount/Dismount function.

APPENDIX C

FINAL WORD PROCESSING CHECK

APPENDIX C
FINAL WORD PROCESSING CHECK

C.1 DESCRIPTION

Final Word Processing Checkout for an OIS system consists of the following items:

Select Word Processing	Delete words in the text
Create a New Document	Insert words into the text
Select Edit a Document	File to archive diskette
Create text	Retrieve from archive diskette
Globally replace words in the text	Delete from archive diskette

This sequence of tests is to be run overnight on all workstations. After running these tests overnight, a document is to be queued to the printers, printed, and the document deleted from library.

A Glossary of the Final Word Processing Checkout has been prepared and this Glossary is included in this appendix. The glossary accounts for differences in tests for standard and archiving workstations. It is suggested that the Field Service Technician archive this Glossary onto his own diskette in order to expedite checkout of OIS systems.

The Final Word Processing Checkout glossary is exercised as follows:

1. Retrieve glossary from diskette (or enter the glossary on the keyboard).
2. Mount initialized diskettes in all archiving workstations and the central archiver.
3. Attach the glossary to all workstations.
4. Exercise Glossary "1" on all archiving workstations and one standard workstation (to test the central archiver).
5. Exercise Glossary "2" on all standard workstations.
6. Cancel the glossary when finished; the glossary will loop upon itself until cancelled.

C.2 GLOSSARY OF FINAL WORD PROCESSING CHECKOUT

---------- Page 1 of Glossary ----------
(1)

(-RETURN-)(-PROMPT-)Enter Library(-EXECUTE-)(-1-KEY-)(-PROMPT-)(-EXECUTE-)
(-GO-TO-GL-)A

---------- Page 2 of Glossary ----------
(A)

(-GL-)a
(-GL-)b
(-GO-TO-GL-)A

---------- Page 3 of Glossary ----------
(2)

(-RETURN-)(-PROMPT-)Enter Library(-EXECUTE-)(-1-KEY-)(-PROMPT-)(-EXECUTE-)
(-GO-TO-GL-)B

---------- Page 4 of Glossary ----------

(B)

(-GL-)a
(-GL-)c
(-GO-TO-GL-)B

---------- Page 5 of Glossary ----------

(a)
(-EXECUTE-)Test Document(-EXECUTE-)
This is a test. This is only a test.(-RETURN-)
(-GO-TO-PAGE-)(-NORTH-)(-COPY-)(-GO-TO-PAGE-)(-SOUTH-)(-EXECUTE-)(-EXECUTE-)
(-GO-TO-PAGE-)(-NORTH-)(-COPY-)(-GO-TO-PAGE-)(-SOUTH-)(-EXECUTE-)(-EXECUTE-)
(-GO-TO-PAGE-)(-NORTH-)(-COPY-)(-GO-TO-PAGE-)(-SOUTH-)(-EXECUTE-)(-EXECUTE-)
(-GO-TO-PAGE-)(-NORTH-)(-COPY-)(-GO-TO-PAGE-)(-SOUTH-)(-EXECUTE-)(-EXECUTE-)
(-GO-TO-PAGE-)(-NORTH-)(-COPY-)(-GO-TO-PAGE-)(-SOUTH-)(-EXECUTE-)(-EXECUTE-)
(-GO-TO-PAGE-)(-SOUTH-)(-PAGE-)
(-GO-TO-PAGE-)1(-EXECUTE-)(-COPY-)(-GO-TO-PAGE-)99(-EXECUTE-)(-EXECUTE-)(-EXECUTE-)
(-GO-TO-PAGE-)1(-EXECUTE-)(-SEARCH-)test(-CANCEL-)
(-GLOBL-REPLC-)(-EAST-)(-EAST-)(-EAST-)(-EXECUTE-)
TEST OF REPLACE(-EXECUTE-)(-GLOBL-REPLC-)
(-GO-TO-PAGE-)1(-EXECUTE-)
(-SOUTH-)(-SOUTH-)(-SOUTH-)(-SOUTH-)(-SOUTH-)
(-DELETE-)(-SOUTH-)(-SOUTH-)(-SOUTH-)(-SOUTH-)(-SOUTH-)(-RETURN-)(-EXECUTE-)
(-INSERT-)
This is a test INSERT(-RETURN-)
This is a test INSERT(-RETURN-)
This is a test INSERT(-RETURN-)
This is a test INSERT(-RETURN-)
This is a test INSERT(-RETURN-)
(-EXECUTE-)
(-CANCEL-)(-EXECUTE-)

---------- Page 6 of Glossary ----------

(b)

(-EXECUTE-)
(-EXECUTE-)(-EXECUTE-)(-EXECUTE-)(-EXECUTE-)(-EXECUTE-)
(-EXECUTE-)(-EXECUTE-)(-EXECUTE-)(-EXECUTE-)
(-EXECUTE-)(-EXECUTE-)(-EXECUTE-)(-EXECUTE-)
(-EXECUTE-)(-EXECUTE-)(-EXECUTE-)
(-CANCEL-)

---------- Page 7 of Glossary ----------

(c)

(-EXECUTE-)
(-EXECUTE-)(-EXECUTE-)(-EXECUTE-)
(-CANCEL-)

APPENDIX
D
OIS 140 - CLASS POWER-UP (PROM) DIAGNOSTIC

APPENDIX D

OIS 140-CLASS POWER-UP (PROM) DIAGNOSTIC

D.1 INTRODUCTION

This appendix contains the complete guide for the proper use of the PROM-based OIS 140-Class Power-Up Diagnostic (Revision 52C0 at this printing). This Appendix discusses the 64K CPU version, with Appendix E describing the differences associated with the 128K Extended Memory Power-Up Diagnostic. The diagnostic is automatically initiated when the system is powered up or alternatively, when the front panel RESET button is depressed.

The primary use of this Power-Up diagnostic at the field level is for the isolation of board failures within the OIS Master Unit. Fault isolation is accomplished through the use of error codes displayed on the Master Unit's front panel LEDs. These error codes are either termed "non-fatal", indicating faulty operating conditions, or "fatal", indicating faulty circuit boards. Corrections or repairs, if required, may be performed by Customer Engineering personnel.

This diagnostic also provides both Detailed and Expanded Error information via error codes displayed on the eight LED indicators present on the CPU/MEM board. This additional error information can be used in the field to aid in the isolation of those problems that are not readily resolved by direct replacement of suspected faulty board(s).

Fault isolation beyond board level is possible in the case of the CPU/MEM board. With the use of diagnostic switches on the top of this board, Expanded Error information is available to correct CPU/MEM board problems by isolating faulty memory chips.

---NOTE---

It should be noted that passing the Power-Up Diagnostic DOES NOT NECESSARILY MEAN the Master Unit is trouble-free. For example, write operations are not performed by the Power-Up Diagnostic, in order to avoid damaging customer documents on system disk. Thus, the system will still pass the Power-Up Diagnostic test even though write cicuitry in either the disk drive or the disk controller may be faulty.

D.2 CONFIGURATION REQUIREMENTS

This diagnostic program verifies correct operation of the OIS 140-Class** Operating System as well as correct operation of the following types of OIS-140-Class Master Unit PCBs with E-Rev levels at or above the stated values:

7501-D	E Rev. 3	CPU/MEMORY
7502	E Rev. 4	10 MEG/FLOPPY CONTROLLER
7503/7504	E Rev. 9/1	DATA LINK CONTROLLER
7505/7506	E Rev. 6/6	SMD/CMD CONTROLLER
7650/7653A	E Rev. 5/11	WINCHESTER CONTROLLER
7950	E Rev. 1	WINCHESTER CONTROLLER

** Masters in the 140-Class incude Models 105, 105-1, 115-1, 115-2, 115-3, 115-4, 125A, 130A, 130B, 130C, 130D, 130E, 140, and 145.

In order to operate the Power-Up Diagnostics, the following conditions must be met:

a. One slave (of any type except WISE) must be connected and powered on (if not available, the test will hang with appropriate error code).

b. The System Disk must be on line and READY (if not, the test will hang with appropriate error code).

c. The Initial Bootstrap Chip (IBC) must be present in the 7501 CPU/MEM board.

d. The System Disk must already be designated by the three-level Disk Select Switch on the front panel BEFORE powering-up or resetting the Master. The switch designates the System Disk to both the Power-Up Diagnostic and Operating System Software.

D.3 MAJOR CHARACTERISTICS

The major characteristics of the OIS 140-Class Power-Up Diagnostic are as follows:

1. The Diagnostic is PROM-loaded, residing in two 1K 2708 EPROMs found on the CPU/MEM board (memory locations 0400 to 0BFF).

   PROM 1 (L101), 378-2666R6

   PROM 2 (L102), 378-2667R6

2. The program is written in Z80 Assembly Language and attains control whenever the system is powered on or reset.

3. At the beginning of the test, the program controls the following events:

   a. It erases all four diagnostic LEDs on the front panel (they are automatically turned on by reset or power on).

   b. It sets a hardware register bit (X'0C0B') to direct any parity error to the diagnostic parity handler.

4. The test reads only the IPL sector data (Track 0, Sector 1) from the System Disk. The System Disk is selected by the three-level pointer switch on the front panel as follows:

   Level - : diskette
   Level -- : Hawk disk drive
   Level --- : Winchester disk drive

   During the test, no disk write operations take place.

5. In the event of an error, a four bit error code will be displayed on the front panel.

6. If the System Disk is not on line (i.e., not powered up or not up to speed), the test will hang in a loop and display an error code on the front panel. When the disk comes on line the error code is erased and the test continues.

7. The OIS 105/115/125A/130A-E systems may include up to 16 peripherals (slaves). The test will IPL the first slave encountered while scanning through all the channels from 1 to 16. If there is no slave powered on, the test will hang in a loop and display an error code on the front panel. When one of the channels comes on line, the error code is erased and the test continues.

8. If an error condition causes the system to halt, it may still be IPLed with the OIS 140 Master Monitor diskette (see section D.12 for instructions).

D.4 USER INTERFACE

The Power-Up Diagnostic is initiated when the user powers up the system via the front panel ON/OFF switch (1/0 on some OIS 140-Class Masters). Alternatively, if the system is already powered up, the user may press the front panel RESET button to re-IPL the system and initiate the diagnostic test.

There are two sets of LEDs used for diagnostic purposes. Four of these are located on the Master Unit's front panel, while the remaining eight reside on the 7501 CPU/MEM board. The four front panel LEDs indicate that either a fatal or non-fatal error has occurred, according to the error codes explained in Table D-1, Section D.6. The front panel LED labled POWER is used to indicate that the Power-Up Diagnostic is executing (blinking mode), or that the system software is executing (solid-on mode). Figures D-1 and D-2 show the OIS 140-Class front panel controls and indicators.

The eight LEDs residing on the CPU/MEM board provide Detailed Error information when a fatal error has occurred (figure D-3). LEDs DL3 through DL0 indicate the number of the last test in process when the fault was encounterred. (Section D.7 lists and numbers the various tests comprising the Power-Up Diagnostic.) All eight LEDs, when read together, provide the two-digit Hex code for Detailed Error analysis. Detailed Error codes are explained in sections D.8 and D.9.

There are four switches and two push buttons on the CPU/MEM board that are used for diagnostics. These controls are used to obtain Expanded Error information (section D.10), or perform special diagnostic functions as explained in section D.12.

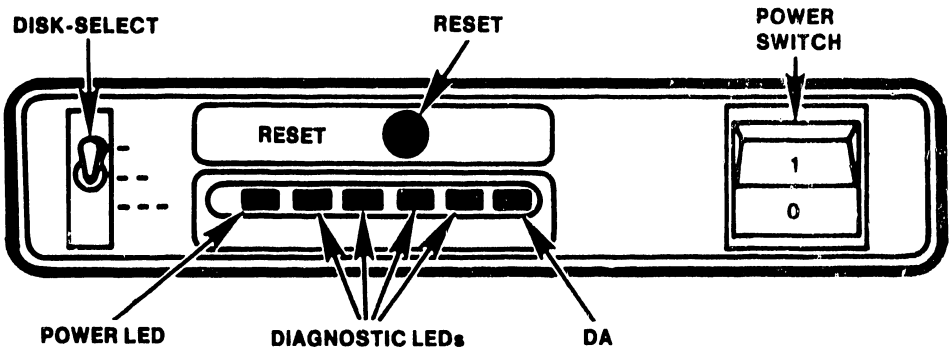

Figure D-1 Front Panel Controls -- OIS 105, 115, 125A, 130A/B/C

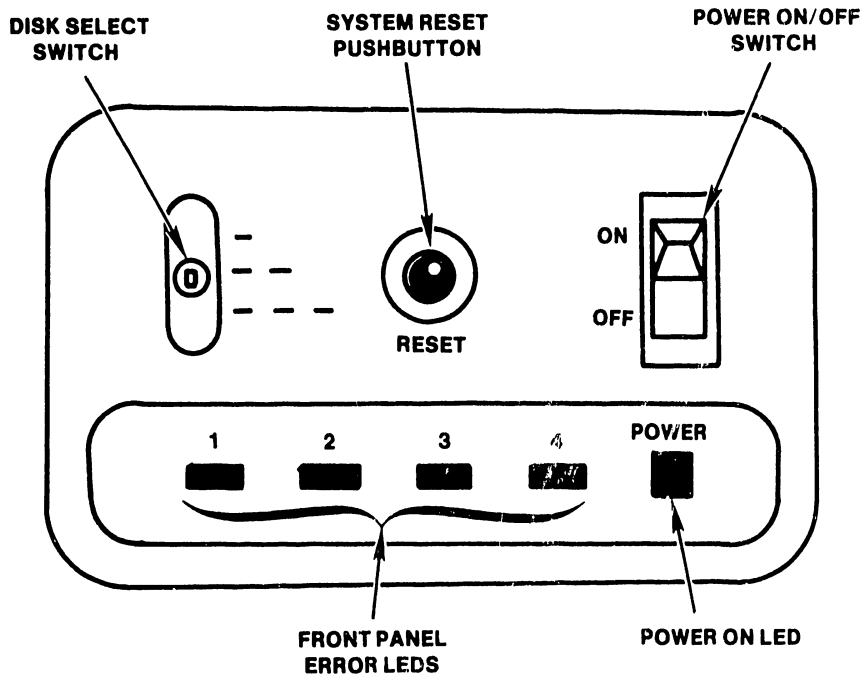

Figure D-2 Front Panel Controls -- OIS 140/145

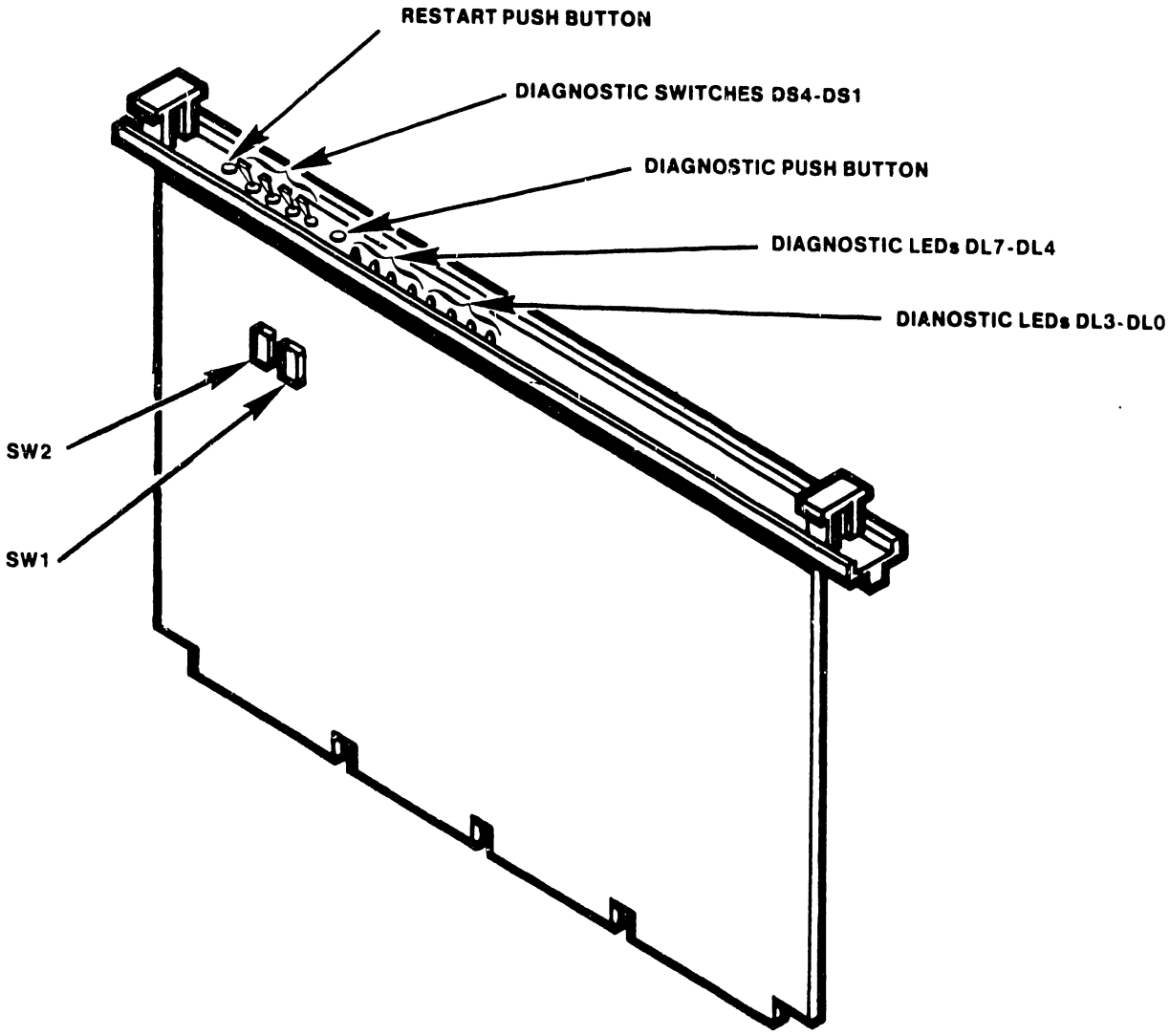

Figure D-3 CPU/MEM Board Diagnostic Controls and indicators

D.5 OPERATING PROCEDURE

The Power-up (PROM) diagnostics start whenever the Master Processor is powered-up or reset and take approximately 15 seconds to be performed.

1. Press RESET on the Master Processor Front Panel. If the system is powered-down, simply set the power switch to 1 (ON).

2. The Power LED will blink while the diagnostics are running.

   A. When all tests pass, the Power LED stops blinking (goes to steady-on) and the IPL menu is displayed at the CRT workstation.

   B. If an error is detected, the Power LED will continue to blink while the Front Panel LEDs display an error code. See sections D.6 through D.10 for error code interpretation. Take action as specified.

3. Enter correct Date and Time when the IPL menu is displayed.

D.6 MASTER UNIT FRONT PANEL ERRROR CODES

Table D-1 explains the error codes displayed by the four front panel diagnostic LEDs. There are two major types of errors: non-fatal and fatal. Non-fatal errors are operator correctable, while fatal errors, which may be either hardware or software faults, require system servicing. Fatal errors are distinguishable by the presence of front panel LED #1 in the "on" state.

TABLE D-1 FRONT PANEL ERROR INDICATIONS

LED ERROR CODE 1 2 3 4	PROBLEM
	NON-FATAL ERROR INDICATIONS
0 0 0 1	No external devices on line: ... Turn on a workstation.
0 0 1 0	Floppy diskette not on line: ... Check position of Disk Select Switch, insert a diskette, or close floppy door.
0 0 1 1	System Winchester not on line: ... Check ready light on drive.
0 1 0 0	HAWK 10-Meg disk unit not on line: ... Check ready light on HAWK.
0 1 0 1	Run-time error: ... Record CPU/MEM LED status and Re-IPL.

TABLE D-1 FRONT PANEL ERROR INDICATIONS
(continued)

LED ERROR CODE 1 2 3 4	PROBLEM
	FATAL ERROR INDICATIONS
1 0 0 0	7501 CPU/MEM board: ... Check CPU/MEM LEDs and Table D-3.
1 0 0 1	7503 DATA LINK CONTROL board or 7504 DATA BUFFER board: ... Replace. (see Table D-4)
1 0 1 0	7502 10-MEG/FLOPPY CONTROLLER board: ... Replace. (see Table D-5)
1 1 0 0	7950 (7650)/7653 WINCHESTER CONTROLLER board(s): Replace. (see Table D-6)
1 1 0 1	Software error: ... Check CPU/MEM LEDs and Table D-7.

D.7 DIAGNOSTIC TEST NUMBER IDENTIFICATION

The Diagnostic LEDs DL3 through DL0 on the top of the CPU/MEM board display the Power-Up Diagnostic test number currently in process. Table D-2 identifies the various tests comprising this diagnostic.

TABLE D-2 TEST IDENTIFICATION AND DESCRIPTIONS

CPU/MEM BOARD LED INDICATORS DL3	DL2	DL1	DL0	TEST NUMBER	TEST NAME
0	0	0	0	0	Data Bus/Parity Gen/Marching 1's and 0's
0	0	0	1	1	Not Used
0	0	1	0	2	Not Used
0	0	1	1	3	Not Used
0	1	0	0	4	Interrupt structure
0	1	0	1	5	CTC Timing/Priority
0	1	1	0	6	Data Link Function
0	1	1	1	7	Diskette Controller
1	0	0	0	8	10-Meg Controller
1	1	1	0	E	Winchester Controller

The normal sequence of test execution is 00, 04, 05, and 06. Note that test 06 will be skipped if a WISE is the only slave on-line. Only one of tests 07, 08, or 0E will be executed next, depending on which drive is selected by the three-level front panel Disk Select switch. If the Winchester Drive is present and it is not the System Disk, it will be initialized and positioned at sector 00 before passing execution to the Initial Bootstrap Chip.

D.8 DETAILED HARDWARE ERROR CODES

The Diagnostic LEDs DL7 through DL0 on the top of the CPU/MEM board display detailed hardware error code when a fatal error has occurred. Tables D-3 through D-6 decipher these codes. Each table corresponds to one of four hardware Front Panel Error Codes, presenting detailed error information for that particular code.

TABLE D-3 CPU/MEM ERRORS
(FRONT PANEL ERROR = 1000)

HEX	DL7-DL4	DL3-DL0	PROBLEM
10*	0001	0000	Data Bus Error
20	0010	0000	MPE bit (0C06) does not flag bad parity
30	0011	0000	NMI does not flag parity errors
40*	0100	0000	MAIN MEMORY PARITY ERROR
50*	0101	0000	Memory error: first read of a READ/WRITE/READ sequence
65	0110	0101	CTC Time Out Occurred
75*	0111	0101	CTC Priority Error
80*	1000	0000	Memory error: second read of a READ/WRITE/READ sequence
94*	1001	0100	Incorrect interrupt vector generated by 0C0F
A4	1010	0100	No interrupts generated by 0C0F
B4*	1011	0100	Incorrect number of interrupts generated by 0C0F
C0	1100	0000	ILLEGAL PROM ADDRESS ERROR

* Error codes notated with asterisks refer to those codes that may be expanded using Diagnostic Switch DS2 on the CPU/MEM board. (See paragraph D.10 for details concerning expanded error information.)

TABLE D-4 DATA LINK CONTROL ERRORS
(FRONT PANEL ERROR = 1001)

HEX	DL7-DL4	DL3-DL0	PROBLEM
16*	0001	0110	Read/Write Control Registers Error
26	0010	0110	Not used
36	0011	0110	CANNOT SELECT A SLAVE
46	0100	0110	CANNOT IPL A SLAVE
56	0101	0110	ONE BYTE SLAVE READ ERROR
66	0110	0110	Not used
76*	0111	0110	DATA LINK BUSY TIME OUT DOING BLOCK TRANSFER
86*	1000	0110	DATA LINK BUSY INT DID NOT OCCUR DOING BLOCK TRANSFER
96*	1001	0110	DATA LINK DATA BUFFER PARITY ERROR ON BLOCK TRANSFER
A6*	1010	0110	Incorrect Data found after Block Transfer

TABLE D-5 10-MEG/FLOPPY ERRORS
(FRONT PANEL ERROR = 1010)

HEX	DL7-DL4	DL3-DL0	PROBLEM
17*	0001	0111	READ/WRITE Control Register Error (Floppy)
27	0010	0111	IPL from Floppy Status Error
47	0100	0111	Floppy: Cannot find track 00
77	0111	0111	No Sector Pulse Interrupt
97	1001	0111	Sector Counter Never Indicates Sector 00
18*	0001	1000	READ/WRITE Control Register Error (10-Meg)
38	0011	1000	Drive Select Register Error
48	0100	1000	10-MEG: Drive Does Not Restore
58	0101	1000	Restore Takes Greater Than 500 Milliseconds
68	0110	1000	No Interrupt On Seek Complete.
78	0111	1000	No Sector Pulse Interrupt.
88	1000	1000	IPL from 10-MEG Status Error.
98	1001	1000	Sector counter never indicates sector 00

TABLE D-6 WINCHESTER CONTROLLER ERRORS
(FRONT PANEL ERROR = 1100)

HEX	DL7-DL4	DL3-DL0	PROBLEM
1E*	0001	1110	READ/WRITE CONTROL REGISTER ERROR
2E	0010	1110	DRIVE DOES NOT BECOME READY
3E	0011	1110	NO SEEK INTERRUPT ON RTZ
4E	0100	1110	TKO NOT SET AFTER RTZ
5E	0101	1110	TIMEOUT ON IPL READ
6E	0110	1110	STATUS ERROR ON IPL READ
7E	0111	1110	CANNOT FIND SECTOR ZERO
8E	1000	1110	READ/SELECT FORCED READ ERROR

D.9 DETAILED SOFTWARE ERROR CODES

When the four front panel LEDs indicate a fatal software error, additional information concerning the error may be obtained by analyzing DL7 through DL0 on the CPU/MEM board, according to the table that follows:

TABLE D-7 DETAILED SOFTWARE ERROR CODES
(FRONT PANEL ERROR = 1101)

HEX	DL7-DL4	DL3-DL0	PROBLEM
DE	1101	1110	XMM ** selected when only 64K memory exists
DF	1101	1111	Datalink error: Moving data to D-space in an XMM
E0	1110	0000	IPLed Disk has an invalid Volume Label
E1	1110	0001	IPLed Disk is not a System Disk
E2	1110	0010	Bad Configuration: too little Master Memory
E3	1110	0011	Bad Configuration: IPLed Disk excluded
E4	1110	0100	Insufficient Memory for Control Blocks TCB
E5	1110	0101	Insufficient Memory for Control Blocks VCB
E6	1110	0110	Insufficient Memory for Control Blocks DCB
E7	1110	0111	Insufficient Memory for Control Blocks FCB
E8	1110	1000	Bad Configuration: Unsupported Disk Type
E9	1110	1001	Insufficient Memory for Buffers (VAU Map)
EA	1110	1010	Insufficient Memory for Buffers (Catalog)
EB	1110	1011	Incorrect PROM Revision Installed
EC	1110	1100	Unsupported Timer Interval
ED	1110	1101	Cannot Mount System Disk
FA	1111	1010	Invalid IPL Sector Hash Code
FB	1111	1011	Error Reading Master or Volume Label
FC	1111	1100	Hard Debug
FD	1111	1101	Soft Debug
FE	1111	1110	Restart Button Depressed
FF	1111	1111	Parity Error

** Extended Memory Master

D.10 EXPANDED HARDWARE ERROR INFORMATION

The detailed hardware error codes marked with an asterisk in Tables D-3 through D-6 can be expanded by positioning Diagnostic Switch DS2 on the CPU/MEM board to its opposite position. Valid additional information exists at the CPU/MEM board LEDs for error codes marked with an asterisk after DS2 has been toggled. The first change of the position of DS2 will cause the first byte of additional error information to be presented at the CPU/MEM board LEDs. Record the data displayed at the LEDs, then toggle DS2 a second time to obtain the second byte of expanded hardware error information.

For the detailed hardware error codes 10, 40, 50, and 80, (See Table D-3) the first byte of information is the high byte of the memory location in error. The second byte of information is the exclusive-or (XOR) of the data read with the data written. Refer to Section D.11 to use these error codes to locate and replace faulty memory chip(s).

For errors 94 and B4 the first byte of information displayed is hexidecimal B0 (x'B0'). The second byte of expanded information for error 94 is the XOR of the low byte interrupt vector received and the one expected. The second byte of error B4 is the number of interrupts that were generated.

The first byte for error 75 is not applicable, the second byte is the XOR of the CTC channel expected to interrupt and the one that did the interrupting.

The first byte for errors 76, 86, 96, and A6, is not applicable. The second byte for each of these errors is the slave selected during the block transfer. Slave select value 00 implies the operation was master to master. Non-zero implies master to slave.

The first byte for errors 16, 17, 18, 19, and 1E (the READ/WRITE Register Test errors) has the low order byte of the Memory Mapped I/O (MMIO) location in error.

TABLE D-8 EXPANDED HARDWARE ERROR CODES

HEX	DL7-DL4	DL3-DL0	FIRST BYTE	SECOND BYTE
** 10	0001	0000	High Byte of Bad Mem Loc.	XOR of data read and data written
** 40	0100	0000	"	"
** 50	0101	0000	"	"
** 80	1000	0000	"	"
94	1001	0100	x'B0'	XOR INTERRUPT
B4	1011	0100	x'B0'	Number of Interrupts
75	0111	0101	N/A	XOR CTC Channel Number
76	0111	0110	N/A	Slave Selected During block Transfer
86	1000	0110	N/A	"
96	1001	0110	N/A	"
A6	1010	0110	N/A	"
16	0001	0110	LO BYTE MMIO	N/A
17	0001	0111	"	N/A
18	0001	1000	"	N/A
19	0001	1001	"	N/A
1E	0001	1110	"	N/A

** See Section D.11 for isolation of faulty memory chips.

D.11 ISOLATION OF FAULTY MEMORY CHIPS

Additional memory error information is available via the CPU/MEM board LEDs. If any of the error codes listed below occur, it may be possible to correct the problem by replacing a memory chip. There are two bytes of additional error information associated with these memory error codes. (Refer to section D.10 for instructions on obtaining expanded error information.) The first byte of information is the high byte of the location where the error occured. The second byte is the exclusive or of the data written to that location and the data subsequently read from the location.

DETAILED ERROR CODES (FRONT PANEL ERROR = 1000)

10, 40, 50, 80

Use the two bytes of expanded error information in conjunction with the table below in order to locate the faulty memory chip.

TABLE D-9 MEMORY CHIP ISOLATION

SECOND BYTE	FIRST BYTE 10-4F	50-8F	90-CF	D0-FF
00	L01	L19	L35	L52
01	L09	L27	L43	L60
02	L08	L26	L42	L59
04	L07	L25	L41	L58
08	L06	L24	L40	L57
10	L05	L23	L39	L56
20	L04	L22	L38	L55
40	L03	L21	L37	L54
80	L02	L20	L36	L53

D.12 SPECIAL DIAGNOSTIC FUNCTIONS

D.12.1 BOOTING A DIAGNOSTIC DISKETTE AFTER A FATAL ERROR

If, during execution of the power-up, a fatal error is detected, it is still possible to IPL a diskette-based diagnostic such as the OIS 140-class Master Monitor Diagnostic package (WLI No. 702-0057).

1. Set the CPU/MEM board Diagnostic Switches to hexidecimal 'D' (i.e., DS4, DS3, and DS1 to 'ON', and DS2 to 'OFF').

2. Press the CPU/MEM Diagnostic Push Button (DPB). See figure D-3.

This will cause the Power-Up Diagnostic PROM to pass control to the Initial Bootstrap Chip and attempt to boot up the selected diskette.

D.12.2 LAMP TEST EXECUTION

Perform the following procedure to test all Front Panel and CPU/MEM Board LEDs.

1. Set the CPU/MEM Diagnostic Switches to the OFF position.
2. Press and hold the Diagnostic Push Button (DPB) on the CPU/MEM board.
3. Press and release the Front Panel RESET switch.

This should cause all of the Diagnostic LEDs (except DA on Systems with Winchester System Disks) to light. To continue with the diagnostic just release the DPB.

D.12.3 CPU/MEMORY BOARD TEST AND LOOP MODE

There is an option to continuously run only the CPU/MEM board diagnostic tests. To select this function perform the following procedure:

1. Set the four CPU/MEM board diagnostic switches to the 'ON' state.
2. Press and hold the CPU/MEM board Diagnostic Push Button (DPB).
3. Press and release the Front Panel RESET button, then release the DPB.

This action will set a flag directing the diagnostic to execute only CPU/MEM board functions in a continuous loop. Errors will be reported in the usual manner. To exit this mode and execute a normal Power-Up, simply reset the system via the Front Panel RESET button.

D.13 REFERENCE

At the time of this printing the OIS 140-Class Power-Up Diagnostic exists at the Revision 52C0 level. Should this level change, as it often does, the latest version of the Power-Up Diagnostic documentation may be obtained by ordering WLI Number 702-0042 from the Diagnostic Distribution Group.

APPENDIX
E
OIS 140 - CLASS
EXTENDED
MEMORY
POWER-UP DIAG.

APPENDIX E

OIS 140-CLASS EXTENDED MEMORY POWER-UP DIAGNOSTIC

E.1 INTRODUCTION

This appendix is designed to serve as a supplement to Appendix D, outlining the differences between the normal power-up diagnostic and its Extended Memory counterpart. For the most part, Appendix D is directly applicable to Extended Memory systems. The exceptions are explicitly stated in the paragraphs that follow. The addition of the 7684/7685 Mother/Daughterboard set affects the normal 140-Class Power-Up Diagnostic in the following ways:

1. An additional code has been included in the set of front panel error codes, in order to indicate occurance of a fatal error in the 7685A Daughterboard.

2. An additional set of detailed error codes associated with the daughterboard has been included.

3. Additional extended (two-byte) error information has been included, in order to isolate faulty Daughterboard memory chips.

4. Three additional test modules have been included to test Daughterboard circuitry.

E.2 CONFIGURATION REQUIREMENTS

This diagnostic program verifies correct operation of the OIS 140-Class** Operating System as well as correct operation of the following types of OIS 140-Class Master Unit PCBs having E-Rev levels at or above the stated values:

7501-D	E Rev. 3	CPU/MEMORY
7502	E Rev. 4	10 MEG/FLOPPY CONTROLLER
7503/7504	E Rev. 9/1	DATA LINK CONTROLLER
7505/7506	E Rev. 6/6	SMD/CMD CONTROLLER
7650/7653A	E Rev. 5/11	WINCHESTER CONTROLLER
7950	E Rev. 1	WINCHESTER CONTROLLER

** Masters in the 140-Class incude Models 105, 105-1, 115-1, 115-2, 115-3, 115-4, 125A, 130A, 130B, 130C, 130D, 130E, 140, and 145.

E.3 PROM SPECIFICATIONS

	PCB	LOCATION	TYPE	WLI No.
PROM 1	7684A	L110	2716 EPROM	378-5002R3
PROM 2	7684A	L111	2716 EPROM	378-5003R3

E.4 128K EXTENDED MEMORY CHARACTERISTICS

The 128K Extended Memory (EM-OIS) is a two board option providing additional memory for OIS 140-Class systems. The option is available for Office Information Systems 140/145, as well as models 105/115/125/130. The option adds 60K of user RAM memory to the existing 60K user RAM. An OIS system with this option has 120K of user RAM, 2K of non-user RAM, and 6K of ROM for the Initial Bootstrap and Power-up diagnostics.

The option is installed by removing the existing 7501 CPU/MEMORY board and replacing it with the new two board combination of CPU/Memory and Extended Memory. The option is a piggyback arrangement of motherboard (210-7684A) and daughterboard (210-7685A) maintained as a unit (P/N 212-3025). It plugs into the single (4 section) connector where the previous CPU/MEMORY board was installed.

This 128K memory option allows future software enhancements of all OIS 140-Class systems. It is normally required when an OIS System is connected in a Wang Inter-System Exchange (WISE) network operating with Level 2 software. The Wise network, an intelligent interconnection system, functions as a high speed communication path between OIS systems. The WISE unit is a self-contained assembly with a single CPU and Memory board and up to four Data Link boards (1 per channel). It connects as a slave unit for a designated OIS Master. The EM-OIS 128K option increases the number of files than can be opened concurrently in a WISE network.

E.4.1 INSTALLATION

To install the EM-OIS 128K option on any OIS 140-Class system;

Turn off all power
Remove the top cover of the cabinet
Remove the existing 7501 CPU/Memory board
Plug new piggyback combination (212-3025) into same location
Return power to the system
Reconfigure for "supported Extended Memory Master" using starter diskette

In OIS systems, both the Initial Bootstrap and the Power-up diagnostics are PROM resident. Returning power to the system resets the system, bootstraps it, and runs the diagnostics. The power-up diagnostic takes about 7 seconds to run if successful. It stops and displays error codes for any failed module or memory chip.

E.4.2 MODIFIED HARDWARE

The mother/daughter board combination has a memory address space of 64K, shared by two banks of memory. An address space of 3K is shared by 6K of Eraseable PROM (EPROM). An address space of 60K is shared by 60K of RAM Instruction (I) memory and 60K of RAM Data (D) memory. Memory Mapped I/O (MMIO) uses 1K of unshared RAM. The 128K option boards retain circuits for parity generation and checking and Input and Output (I/O) decoding. The option boards also retain the Counter Timer Circuit (CTC) and the priority interrupt (INT) structure.

The hardware design provides five software-controlled memory modes for the operating system. These modes are as follows:

Mode 1 Instruction (or I) space
Mode 2 Instruction/Data (or I/D) space
Mode 3 Data (or D) space
Mode 4 DMA transfers
Mode 5 Data/Instruction (or D/I) space.

The five memory modes are described below.

1. MODE 1 is defined as Instruction, or I, space. In Mode 1, the system functions as a normal 140 class master ignoring the additional memory. It is the default mode after Reset or Power-up. Mode 1 loads all IPL code into Instruction (I) memory at power up time. After the IPL loading, software selects any of the five memory modes.

2. MODE 2 is a defined as I/D space, an Instruction/Data memory organization. This mode is the most powerful because it enables the additional 60K of RAM and its control circuitry. Mode 2 is selected only after the IPL code is loaded into (I) memory. It is initialized when an OIS 140 class system is in a WISE network with Level 2 software.

Two 60K banks of memory are active in the system with Mode 2. One array, or bank, is Instruction RAM (I space), and the second is Data RAM (D space). The memory banks share the same addressing space. Because they share address space, the bottom 4K of memory address space is masked. This space is used as adresses for 3K of ROM and 1K for Memory Mapped IN/OUT (MMIO)

Ideally, all instruction code is loaded into (I) space, while Stacks, Tables and File Control Blocks (FCBs) reside in (D) space.

The control circuitry, located on the daughterboard, does an OPCODE DECODE when the system is in the I/D mode. this decoding technique is a steering mechanism for memory, allowing convenient alternate addressing between the two 60K memory banks of RAM.

3. MODE 3 is defined as Data, or D, space. It is similar to Mode 1 except that the additional 60K of memory (D) space is the only memory array accessed by the system. This mode is useful for diagnostics.

4. MODE 4 is defined as DMA transfer space. The modified CPU is designed for software-controlled DMA transfers between data buffers and either (I) or (D) space. Software directs the normal flow of the Master Memory/Data Buffer transfers to I space by clearing bit 2 of the Program Control Register (PCR). DMA transfers to or from D space are enabled when bit 2 of the PCR is set.

5. MODE 5 is defined as D/I space. It is the opposite of Mode 2 and follows the same conventions as Mode 2 except that memory is structured in a (D/I) configuration.

Memory organization is software-controlled through the PCR. Software selects the memory mode operation by controlling four bits in the PCR.

E.5 MASTER UNIT FRONT PANEL ERROR CODES

Table E-1 explains the error codes displayed by the four front panel diagnostic LEDs. Note that this table differs from Table D-1 due to the addition of error code 1110, which indicates a fatal error involving the 7685A CPU/MEM Daughterboard.

TABLE E-1 FRONT PANEL ERROR INDICATIONS

LED ERROR CODE 1 2 3 4	PROBLEM
	NON-FATAL ERROR INDICATIONS
0 0 0 1	No external devices on line: ... Turn on a workstation.
0 0 1 0	Floppy diskette not on line: ... Check position of Disk Select Switch, insert a diskette, or close floppy door.
0 0 1 1	Winchester not on line: ... Check ready light on drive.
0 1 0 0	HAWK 10-Meg disk unit not on line: ... Check ready light on HAWK.
0 1 0 1	Run-time error: ... Record CPU/MEM LED status and Re-IPL.
	FATAL ERROR INDICATIONS
1 0 0 0	7684 CPU/MEM board: ... Check CPU/MEM LEDs and section E.7.
1 0 0 1	7503 DATA LINK CONTROL board or 7504 DATA BUFFER board: ... Replace. (See Table D-4.)
1 0 1 0	7502 10-MEG/FLOPPY CONTROLLER board: ... Replace. (See Table D-5.)
1 1 0 0	7650/7653 WINCHESTER CONTROLLER board(s): ... Replace. (See Table D-6.)
1 1 0 1	Software error: ... Check CPU/MEM LEDs and Table D-7.
1 1 1 0	7685 EXPANDED MEMORY DAUGHTERBOARD: ... See section E.7

E.6 DIAGNOSTIC TEST NUMBER IDENTIFICATION

The Diagnostic LEDs DL3 through DL0 on the top of the CPU/MEM board display the Power-Up Diagnostic test number currently in process. Table E-2 identifies the various tests comprising this diagnostic.

TARLE E-2 TEST IDENTIFICATION AND DESCRIPTIONS

CPU/MEM BOARD LED INDICATORS				TEST	TEST NAME
DL3	DL2	DL1	DL0	NUMBER	
0	0	0	0	00	Data Bus/Parity Gen/Marching 1's and 0's
0	0	0	1	01	Not Used
0	0	1	0	02	Not Used
0	0	1	1	03	Not Used
0	1	0	0	04	Interrupt structure
0	1	0	1	05	CTC Timing/Priority
0	1	1	0	06	Data Link Function
1	0	1	0	0A	Test 00 applied to Daughterboard
1	0	1	1	0B	ROM Decoding Tests (Daughterboard)
1	1	0	0	0C	I/D Interrupt Structure (Test 04 in I/D mode)
0	1	1	1	07	Diskette Controller
1	0	0	0	08	10-Meg Controller
1	1	1	0	0E	Winchester Controller

The normal sequence of test execution is 00, 04, 05, and 06. Note that Test 06 will be skipped if a WISE is the only slave on-line. After Test 06 is completed, Tests 0A through 0C will be executed if and only if the 7685 Expanded Memory board is present. Only one of Tests 07, 08, or 0E will be executed next, depending on which drive is selected by the three-level front panel Disk Select switch. If the Winchester Drive is present and it is not the System Disk, it will be initialized and positioned at sector 00 before passing execution to the Initial Bootstrap Chip.

E.7 DETAILED ERROR CODES

Tables D-4 through D-7 in the preceding appendix are still applicable to Expanded Memory operation. The Expanded Memory Power-Up Diagnostic provides an additional set of detailed error codes which are associated with the 7684 Motherboard and the 7685 Daughterboard. These are presented in Tables E-3 and E-4 on the next two pages.

TABLE E-3 128K MOTHER MODULE
(FRONT PANEL ERROR = 1000)

HEX	DL7-DL4	DL3-DL0	PROBLEM
10*	0001	0000	Data Bus Error
20	0010	0000	MPE bit (0C06) does not flag bad parity
30	0011	0000	NMI does not flag parity errors
40*	0100	0000	MAIN MEMORY PARITY ERROR
50*	0101	0000	Memory error: first read of a READ/WRITE/READ sequence
65	0110	0101	CTC time out occurred
75	0111	0101	CTC priority error
80*	1000	0000	Memory error: second read of a READ/WRITE/READ sequence
94	1001	0100	Incorrect interrupt vector generated by 0C0F
A4	1010	0100	No interrupts generated by 0C0F
B4	1011	0100	Incorrect number of interrupts generated by 0C0F
C0	1100	0000	ILLEGAL PROM ADDRESS ERROR

* See section E.8 for Expanded Error Code information.

TABLE E-4 120K DAUGHTER MODULE
(FRONT PANEL ERROR = 1110)

HEX	DL7-DL4	DL3-DL0	PROBLEM
1A	0001	1010	Can not access other side of PROMs
2A	0010	1010	D Space not being accessed
3A	0011	1010	No NMI generated after parity error, or OC22
4A*	0100	1010	Data Bus Error
5A	0101	1010	MPE Bit not set on parity error
6A*	0110	1010	Parity error on Daughterboard
7A	0111	1010	Illegal PROM address error
8A*	1000	1010	Memory error on first READ of READ/WRITE/READ
9A*	1001	1010	Memory error on second READ of READ/WRITE/READ
1B	0001	1011	IPA Bit not set after OC22 WRITE
2B	0010	1011	Table ROM Checksum error ROM 1
3B	0011	1011	Table ROM Checksum error ROM 2
4B	0100	1011	No NMI when illegal PROM address is generated
5B	0101	1011	I/D problem, page 0, PROM 1 (CB Instruction)
6B	0110	1011	I/D problem, page 1, PROM 1 (ED Instruction)
7B	0111	1011	I/D problem, page 2, PROM 1 (DD Instruction)
8B	1000	1011	I/D problem, page 3, PROM 1 (FD Instruction)
9B	1001	1011	D/I Mode not reflected in OC20
AB	1010	1011	D/I does not execute MRD from I Space
BB	1011	1011	DMA BLOCK XFER from I to D bad
CB	1100	1011	DMA BLOCK XFER from D to I bad
DB	1101	1011	M1 from D Space while in I/D Mode
EB	1110	1011	Can not return to continue PUP
1C*	0001	1100	Incorrect interrupt vector generated
2C	0010	1100	No interrupts occurred
3C*	0011	1100	Incorrect number of interrupts occurred

* See section E.8 for Expanded Error Code information.

E.8 EXPANDED HARDWARE ERROR INFORMATION

The detailed hardware error codes marked with an asterisk in Tables E-3 and E-4, can be expanded by positioning Diagnostic Switch DS2 on the CPU/MEM board to its opposite position. Valid additional information exists at the CPU/MEM board LEDs for error codes marked with an asterisk after DS2 has been toggled. The first change of the position of DS2 will cause the first byte of additional error information to be presented at the CPU/MEM board LEDs. Record the data displayed at the LEDs, then toggle DS2 a second time to obtain the second byte of expanded hardware error information. See Section D-10 for additional information.

TABLE E-5 EXPANDED HARDWARE ERROR CODES

HEX	DL7-DL4	DL3-DL0	FIRST BYTE	SECOND BYTE
10	0001	0000	High Byte of Bad Mem Loc.	XOR of data read and data written
40	0100	0000	"	"
50	0101	0000	"	"
80	1000	0000	"	"
4A			High Byte of Bad Mem Loc.	XOR of data read and data written
6A			"	"
8A			"	"
9A			"	"
1C			x'B0'	XOR INTERRUPT
3C			x'Bo'	Number of Interrupts

E.9 ISOLATION OF FAULTY MEMORY CHIPS

Additional memory error information is available via the CPU/MEM board LEDs. If any of the error codes listed below occur, it may be possible to correct the problem by replacing a memory chip. There are two bytes of additional error information associated with these memory error codes. (Refer to section E.8 for instructions on obtaining expanded error information.) The first byte of information is the high byte of the location where the error occured. The second byte is the exclusive or of the data written to that location and the data subsequently read from the location.

DETAILED ERROR CODES (FRONT PANEL ERROR = 1000)

10, 40, 50, 80

DETAILED ERROR CODES (FRONT PANEL ERROR = 1110)

4A, 6A, 8A, 9A

Use the two bytes of expanded error information in conjunction with the tables E-5 and E-6 in order to locate the faulty memory chip.

TABLE E-6 MEMORY CHIP ISOLATION
FRONT PANEL = 1000 (7684 PCB)

SECOND BYTE	FIRST BYTE 10-4F	50-8F	90-CF	D0-FF
00	L09	L30	L50	L69
01	L08	L29	L49	L68
02	L07	L28	L48	L67
04	L06	L27	L47	L66
08	L05	L26	L46	L65
10	L04	L25	L45	L64
20	L03	L24	L44	L63
40	L02	L23	L43	L62
80	L01	L22	L42	L61

TABLE E-7 MEMORY CHIP ISOLATION
FRONT PANEL = 1110 (7685 PCB)

SECOND BYTE	FIRST BYTE 10-4F	50-8F	90-CF	D0-FF
00	L07	L24	L41	L58
01	L15	L32	L49	L66
02	L14	L31	L48	L65
04	L13	L30	L47	L64
08	L12	L29	L46	L63
10	L11	L28	L45	L62
20	L10	L27	L44	L61
40	L09	L26	L43	L60
80	L08	L25	L42	L59

E.10 REFERENCE

At the time of this printing the OIS 140-Class Extended Memory Power-Up Diagnostic exists at the Revision 5310 level. Should this level change, as it often does, the latest documentation on the Power-Up Diagnostic may be obtained by ordering WLI Number 702-0123 from the Diagnostic Distribution Group.

CHAPTER 6 SCHE-MATICS

CHAPTER 6

SCHEMATICS

This chapter provides electrical schematics for the following printed circuit boards:

WLI #	DESCRIPTION	# PAGES
210-7501-D	CPU/MEMORY	6
210-7502	10 MEG/FLOPPY CONTROLLER	6
210-7503	DATA LINK CONTROLLER	8
210-7504	DATA BUFFER	7
210-7650	WINCHESTER "A" CONTROLLER	6
210-7950	WINCHESTER "A" CONTROLLER	6
210-7653	WINCHESTER "B" CONTROLLER	6
210-7649	MOTHERBOARD	1
210-7649-900	INTERCONNECTION DIAGRAM	1
210-7887	POWER SUPPLY REGULATOR	2
210-7684	128K EXTENDED MEM CPU	9
210-7685	128K EXTENDED MEM DAUGHTER	4

"THIS DRAWING AND THE DATA SHOWN THEREON ARE THE CONFIDENTIAL PROPERTY OF, AND ARE PROPRIETARY TO, WANG LABORATORIES, INC. THIS DRAWING AND THE DATA SHOWN THEREON MAY NOT BE MADE PUBLIC WITHOUT THE WRITTEN CONSENT OF WANG LABORATORIES, INC. IF FOR ANY REASON THIS DRAWING IS PERMITTED BY WANG TO LEAVE THE PHYSICAL CUSTODY OF THE COMPANY, IT IS RETURNABLE UPON THE DEMAND OF WANG LABORATORIES, INC."

DO NOT SCALE

* HAND WIRED PER ECN# 14794.

| | | |

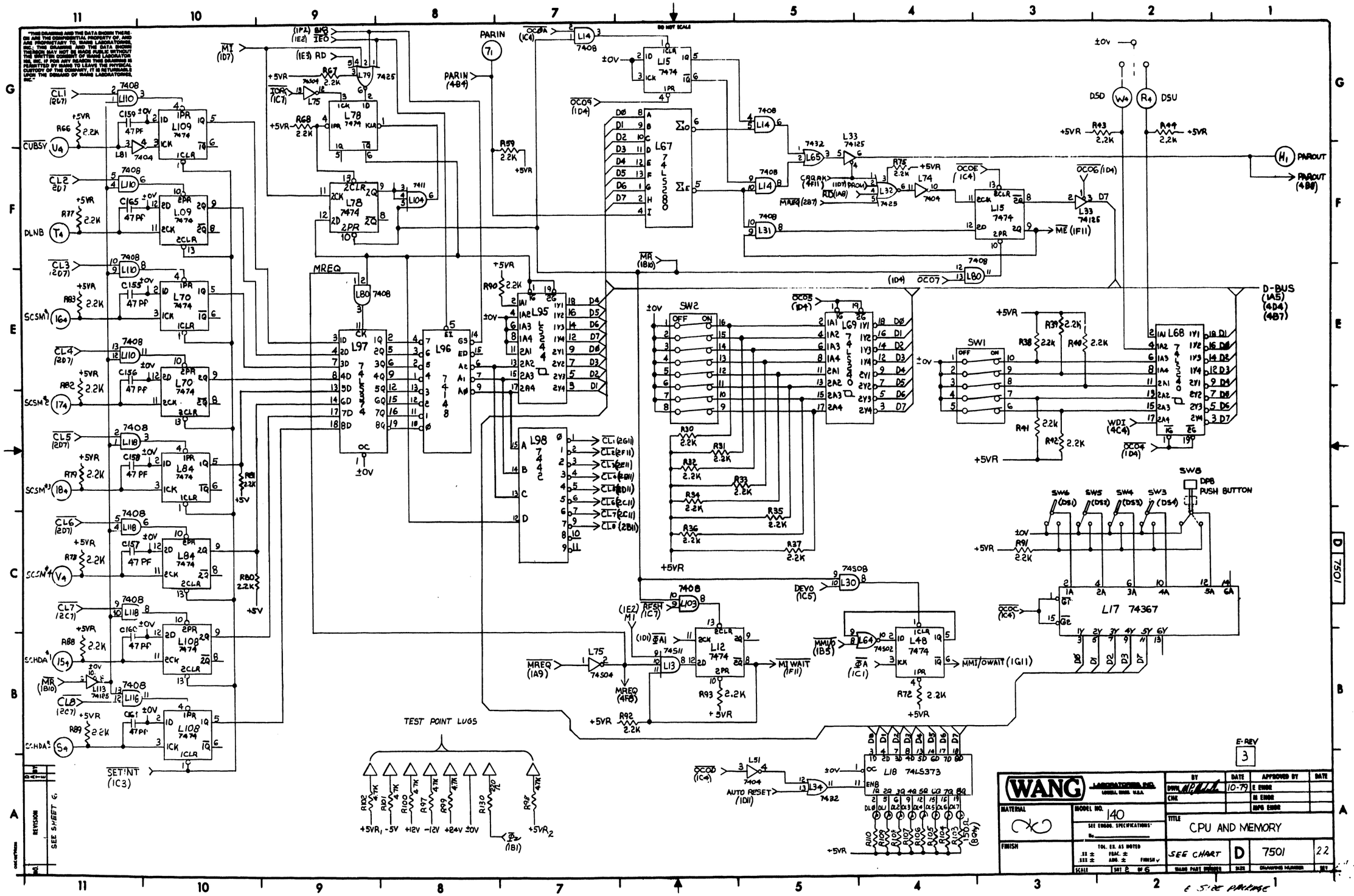

WANG
LABORATORIES, INC.
LOWELL, MASS. U.S.A.
MODEL NO. 140
CPU AND MEMORY
SEE CHART
D
7501
22
E-REV
3
E SIZE PACKAGE
TEST POINT LUGS
PARIN
PARIN (4B4)
MREQ
D-BUS (1A5) (4D4) (4B7)
PAROUT
PAROUT (4B8)
SW8
DPB
PUSH BUTTON
L17 74367
L18 74LS373
L67 74LS280
L95 LS244
L96 74148
L97 74LS374
L98 7442
L69 74LS240
L68 74LS240
L12 7474
L48 7474
L15 7474
L78 7474
L109 7474
L70 7474
L84 7474
L108 7474
SW1
SW2
SW3
SW4
SW5
SW6
SW7
SW8
DSD
DSU
SET INT (1C3)
AUTO RESET (1D11)
MI WAIT (1F11)
MMI/OWAIT (1G11)
DEVO (1C5)
MREQ (1A9)
MREQ (4F8)
CUBSY
DLNB
SCSM
SCHDA
SEE SHEET 6
REVISION

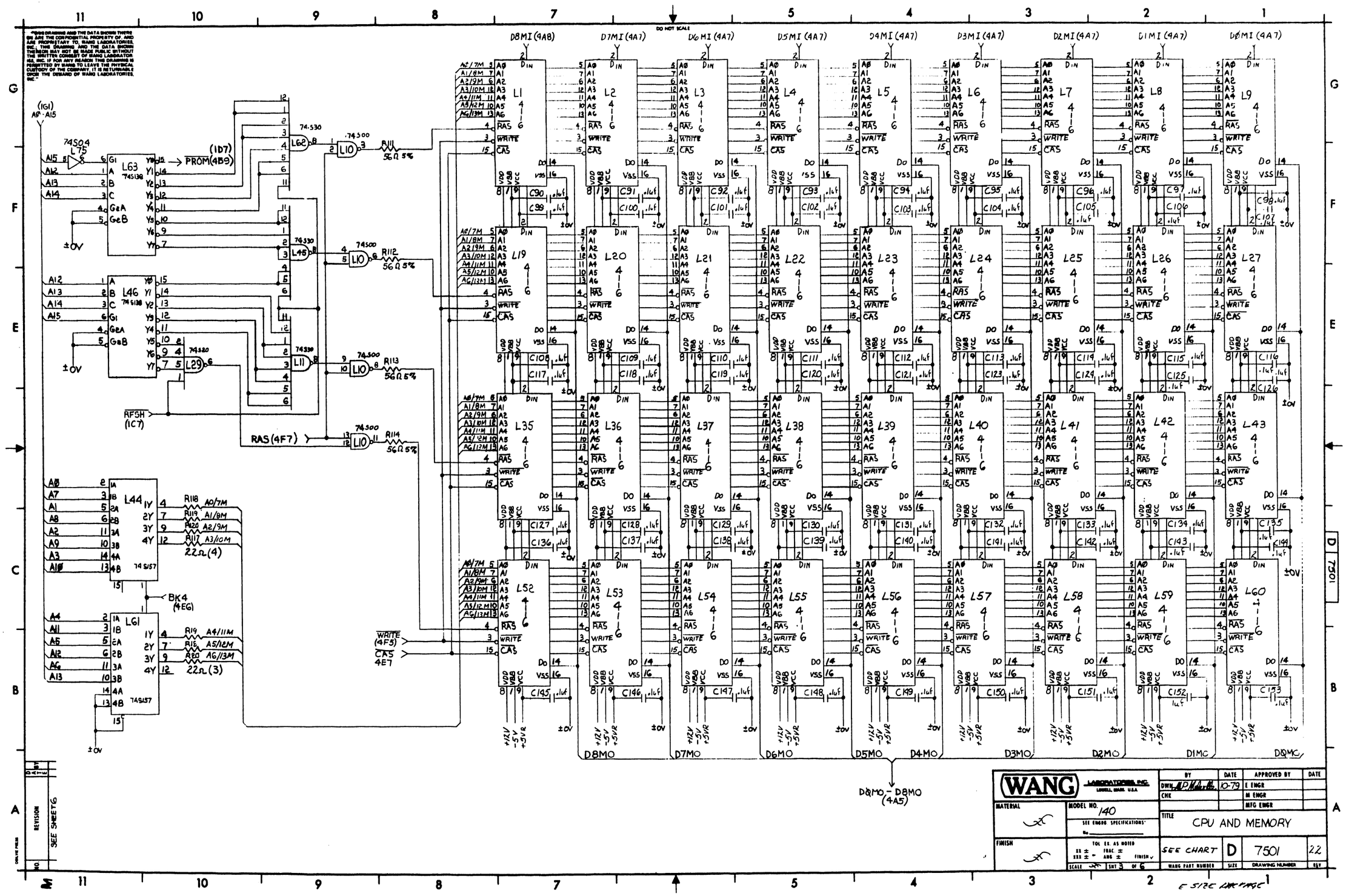

DO NOT SCALE
D8MI (4A8)
D7MI (4A7)
D6MI (4A7)
D5MI (4A7)
D4MI (4A7)
D3MI (4A7)
D2MI (4A7)
D1MI (4A7)
DØMI (4A7)
D8MO
D7MO
D6MO
D5MO
D4MO
D3MO
D2MO
D1MO
DØMO
DØMO - D8MO (4A5)
(1G1) AØ-A15
74S04 L75
L63 74S138
L46 74S138
L44 74S157
L61 74S157
PROM (4B9)
(1D7)
RFSH (1C7)
RAS (4F7)
BK4 (4E6)
WRITE (4F5)
CAS 4E7
R111 56Ω 5%
R112 56Ω 5%
R113 56Ω 5%
R114 56Ω 5%
R118 A0/7M
R119 A1/8M
R120 A2/9M
R117 A3/10M
22Ω (4)
R19 A4/11M
R18 A5/12M
R20 A6/13M
22Ω (3)
L1 L2 L3 L4 L5 L6 L7 L8 L9
L19 L20 L21 L22 L23 L24 L25 L26 L27
L35 L36 L37 L38 L39 L40 L41 L42 L43
L52 L53 L54 L55 L56 L57 L58 L59 L60
+12V -5V +5VR
±0V
WANG LABORATORIES, INC. LOWELL, MASS. U.S.A.
MATERIAL
FINISH
MODEL NO. 140
SEE ENGRG SPECIFICATIONS
TOL EX. AS NOTED
SCALE
SHT 3 OF 6
BY
DATE
APPROVED BY
DWN
10-79
CHK
E ENGR
M ENGR
MFG ENGR
TITLE CPU AND MEMORY
SEE CHART
D
7501
22
WANG PART NUMBER
SIZE
DRAWING NUMBER
REV
REVISION
SEE SHEET 6
E SIZE LINKAGE

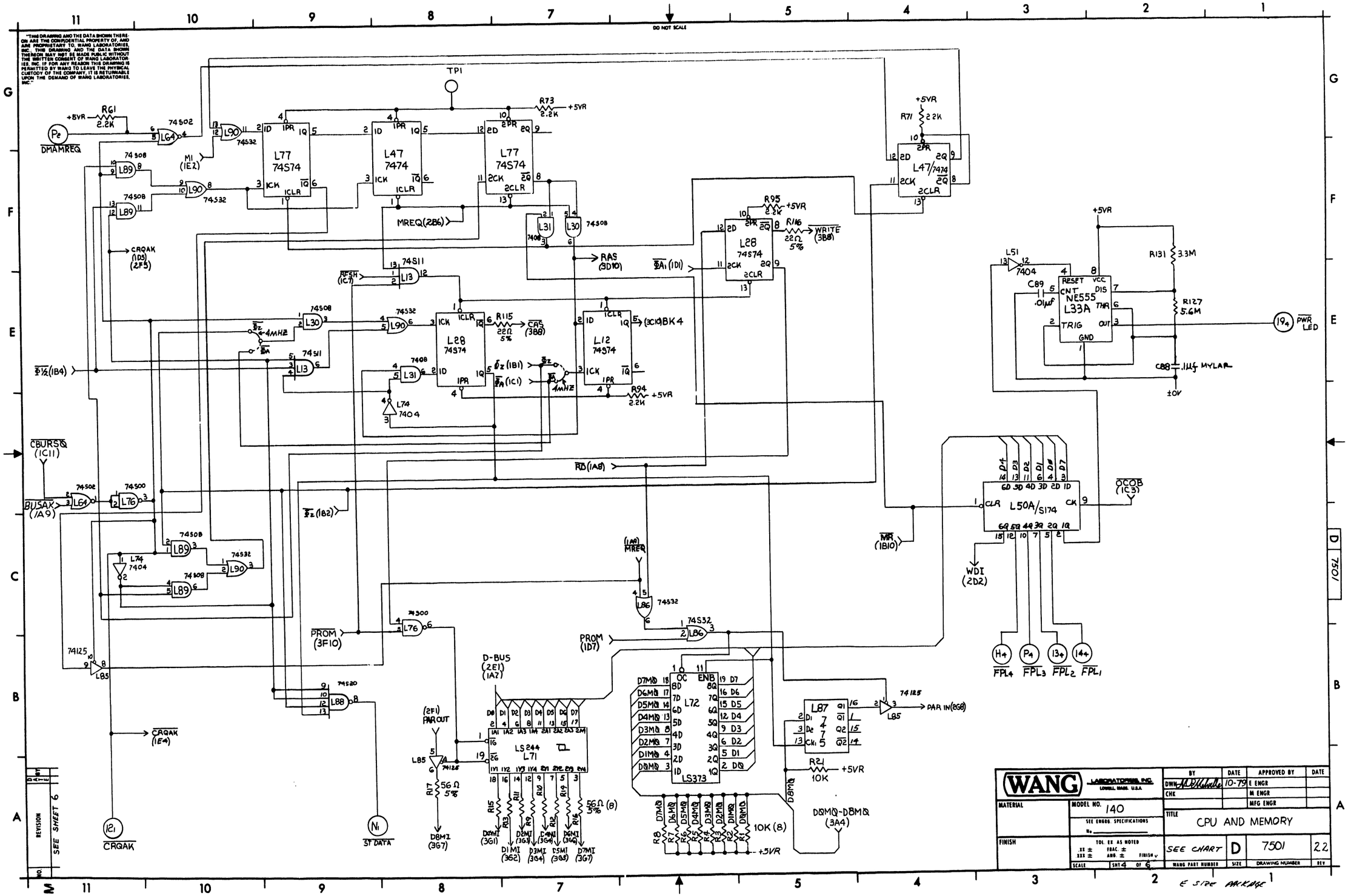

"THIS DRAWING AND THE DATA SHOWN THEREON ARE THE CONFIDENTIAL PROPERTY OF, AND ARE PROPRIETARY TO, WANG LABORATORIES, INC. THIS DRAWING AND THE DATA SHOWN THEREON MAY NOT BE MADE PUBLIC WITHOUT THE WRITTEN CONSENT OF WANG LABORATORIES, INC. IF FOR ANY REASON THIS DRAWING IS PERMITTED BY WANG TO LEAVE THE PHYSICAL CUSTODY OF THE COMPANY, IT IS RETURNABLE UPON THE DEMAND OF WANG LABORATORIES, INC."

WANG LABORATORIES, INC. LOWELL, MASS. U.S.A.		BY	DATE	APPROVED BY	DATE
		DWN	10-79	E ENGR	
		CHK		M ENGR	
				MFG ENGR	
MATERIAL	MODEL NO. 140	TITLE CPU AND MEMORY			
	SEE ENGRG. SPECIFICATIONS No.				
FINISH	TOL. EX. AS NOTED .XX ± .XXX ± FRAC. ± ANG. ± FINISH	SEE CHART	D	7501	22
	SCALE SHT 4 OF 6	WANG PART NUMBER	SIZE	DRAWING NUMBER	REV

E SIZE PACKAGE

REVISION SEE SHEET 6

D 7501

"THIS DRAWING AND THE DATA SHOWN THEREON ARE THE CONFIDENTIAL PROPERTY OF, AND ARE PROPRIETARY TO, WANG LABORATORIES, INC. THIS DRAWING AND THE DATA SHOWN THEREON MAY NOT BE MADE PUBLIC WITHOUT THE WRITTEN CONSENT OF WANG LABORATORIES, INC. IF FOR ANY REASON THIS DRAWING IS PERMITTED BY WANG TO LEAVE THE PHYSICAL CUSTODY OF THE COMPANY, IT IS RETURNABLE UPON THE DEMAND OF WANG LABORATORIES, INC."

DO NOT SCALE

RESTART SW7 SW3 SW4 SW5 SW6 SW8 DPB

LED7 LED6 LED5 LED4 LED3 LED2 LED1 LED0

Bz +24V -12V +12V -5V +5V1 +5V2 GND

7501 RB

SPARE L33A

SPARE L88A

SW2 SW1

Y1

Q1

L130 L131 L132 L133 L134 L135 L136 L137 L138 L139 L140 L141 L142 L143 L144 L145 L146 L147 L148 L149 L150 L151 L152 L153 L154 L155 L156 L157 L158 L159 L160 L161 L162 L163 L164 L165 L166 L167 L168 L169 L170 L171 L172 L173 L174 L175 L176 L177 L178 L179 L180 L181 L182 L183 L184 L185 L186 L187 L188 L189 L190 L191 L192 L193 L194 L195 L196 L197 L198 L199 L200

C1 C2 C3 C4 C5 C6 C7 C8 C77 C78 C79 C80 C81 C82 C83

R1 R2 R3 R4 R5 R6 R7 R8 R9 R10 R11 R12 R13 R14 R15 R16 R17 R18 R19 R20 R21 R22 R23 R24 R25 R26 R27 R28 R29 R30 R31 R32 R33 R34 R35 R36 R37 R38 R39 R40 R41 R42 R43 R44 R45 R46 R47 R48 R49 R50 R51 R52 R53 R54 R55 R56 R57 R58 R59 R60 R61 R62 R63 R64 R65 R66 R67 R68 R69 R70 R71 R72 R73 R74 R75 R76 R77 R78 R79 R80 R81 R82 R83 R84 R85 R86 R87 R88 R89 R90 R91 R92 R93 R94 R95 R96 R97 R98 R99 R100 R101 R102 R103 R104 R105 R106 R107 R108 R109 R110 R111 R112 R113 R114 R115 R116 R117 R118 R119 R120 R121 R122 R123 R124 R125 R126 R127 R128 R129 R130 R131 R132 R133 R134 R135 R136 R137 R138 R139 R140 R141 R142 R143 R144 R145 R146 R147 R148 R149 R150 R151 R152 R153 R154 R155 R156 R157 R158 R159 R160 R161 R162 R163 R164 R165 R166 R167 R168 R169 R170 R171 R172 R173 R174 R175 R176 R177 R178 R179 R180 R181 R182 R183 R184 R185 R186 R187 R188 R189 R190 R191 R192 R193 R194 R195 R196 R197 R198 R199

C9 C10 C11 C12 C13 C14 C15 C16 C17 C18 C19 C20 C21 C22 C23 C24 C25 C26 C27 C28 C29 C30 C31 C32 C33 C34 C35 C36 C37 C38 C39 C40 C41 C42 C43 C44 C45 C46 C47 C48 C49 C50 C51 C52 C53 C54 C55 C56 C57 C58 C59 C60 C61 C62 C63 C64 C65 C66 C67 C68 C69 C70 C71 C72 C73 C74 C75 C76 C77 C78 C79 C80 C81 C82 C83 C84 C85 C86 C87 C88 C89 C90 C91 C92 C93 C94 C95 C96 C97 C98 C99 C100 C101 C102 C103 C104 C105 C106 C107 C108 C109 C110 C111 C112 C113 C114 C115 C116 C117 C118 C119 C120 C121 C122 C123 C124 C125 C126 C127 C128 C129 C130 C131 C132 C133 C134 C135 C136 C137 C138 C139 C140 C141 C142 C143 C144 C145 C146 C147 C148 C149 C150 C151 C152 C153 C154 C155 C156 C157 C158 C159 C160 C161 C162 C163 C164 C165 C166 C167 C168 C169 C170 C171 C172 C173 C174 C175 C176 C177 C178 C179 C180 C181 C182 C183 C184 C185 C186 C187 C188 C189 C190 C191 C192 C193 C194 C195 C196 C197 C198 C199 C200

REVISION

SEE SH 6

BY	DATE	APPROVED BY	DATE
DWN [illegible]	10/79	E ENGR	
CHK		M ENGR	
		MFG ENGR	

WANG LABORATORIES, INC. LOWELL, MASS. U.S.A.

MATERIAL

MODEL NO. 140

SEE ENGRG SPECIFICATIONS

No.

FINISH

TOL. EX. AS NOTED
.XX ± FRAC ±
.XXX ± ANG. ± FINISH √

SCALE 1:1 SHT 5 OF 6

TITLE CPU AND MEMORY

SEE CHART | D | 7501 | 22

WANG PART NUMBER | SIZE | DRAWING NUMBER | REV

E SIZE ARCAM 1

"THIS DRAWING AND THE DATA SHOWN THEREON ARE THE CONFIDENTIAL PROPERTY OF, AND ARE PROPRIETARY TO, WANG LABORATORIES, INC. THIS DRAWING AND THE DATA SHOWN THEREON MAY NOT BE MADE PUBLIC WITHOUT THE WRITTEN CONSENT OF WANG LABORATORIES, INC. IF FOR ANY REASON THIS DRAWING IS PERMITTED BY WANG TO LEAVE THE PHYSICAL CUSTODY OF THE COMPANY, IT IS RETURNABLE UPON THE DEMAND OF WANG LABORATORIES, INC."

DO NOT SCALE

COMPONENT	TYPE	W.L.I #
Q1	SPS6551	375-1050
SW1	SWITCH, 5 Pos.	325-1501
SW2	SWITCH, 8 Pos.	325-1503
SW3-6	SWITCH, TOG	325-0040
SW7,8	SWITCH, P.B.	325-0041

COMPONENT	TYPE	W.L.I #
R1-8, 21-29, 128	10K ¼W 10%	330-4010
R9-17, 111-114	56Ω ¼W 5%	330-1057
R18-20, 115-120, 124	22Ω ¼W 5%	330-1023
R30-96, 132	2.2K ¼W 10%	330-3022
R97-102	4.7K ¼W 10%	330-3047
R103-110	150Ω ¼W 10%	330-2015
R121-123	330Ω ¼W 10%	330-2033
R125	1K ¼W 10%	330-3010
R126	12Ω ¼W 10%	330-1012
R127	5.6MΩ ¼W 10%	330-6056
R129	390Ω ¼W 10%	330-2039
R130	2.2ΩΩ ¼W 10%	330-2022
R131	3.3MΩ ¼W 10%	330-6033
C1-8, 77-83	15uf 20V	300-4022
C9-76	.047UF, 50V	300-1966
C84-87, 90-121, 123-151, 166	.1uf 50V	300-1930
C88	.1uf, 50V (M)	300-2213
C89	.01uf, 25V	300-1903
C155-161, 165	47Pf 500V	300-1047
C162	680Pf 500V	300-1680
C163	18 PF, 500V	300-1018
C164	150PF 500V	300-1150
C167	3.3uf 15V (T)	300-4016
LEDO-7	MV5024 (RED)	370-0026
Y1	15.9744 MHz	321-0022

LOCATION	TYPE	SPARE
L30	74S08	1
L33, L85	74125	2,1
L34, L65	7432	3,2
L48	74LS74	1
L49, L87	7474	2,1
L51	7407	3
L64	74S02	1
L75	74S04	2
L76, L117	74S00	2,1
L79	7425	1
L82	74S37	3
L83	7420	1
L88	74S20	1
L103	7408	1
L107	74S08	2
L112	7404	4
L119	74S11	2
L119	74S74	1
L120	7437	1

LOCATION	W.L. PART NO.	TYPE
L1-9, 19-27, 35-43, 52-60	376-9002	16 PIN SKT
L16, 100-102	376-9003	24 PIN SKT
L92	376-9011	40 PIN SKT
L94	376-9015	28 PIN SKT

LOCATION	W.L. PART NO.	TYPE
L1-9, 19-27, 35-43, 52-60	SEE CHART	MK4116
L10.76, 117	376-0228	74S00
L11.45.68	376-0198	74S30
L12,28,48,77,116,119	376-0202	74S74
L13, 114	376-0237	74S11
L14, 31, 80, 103, 110, 118	376-0081	7408
L15, 47, 70, 78, 89, 108, 109	376-0006	7474
L16	376-0090	74154
L17	376-0176	74367
L18, 72, 91	376-0310	74LS373
L29, 88	376-0230	74S20
L30, 89, 107	376-0200	74S08
L32, 66, 79	376-0092	7425
L33, 85, 113	376-0324	74125
L33A	376-0126	NE555
L34, 65, 86	376-0093	7432
L44, 61	376-0217	74S157
L46, 63, 99	376-0298	74S138
L49	376-0139	7414
L50	376-0003	7410
L50A	376-0247	74S174
L51, 74, 81, 112	376-0010	7404
L64	376-0199	74S02
L67	376-0242	74LS280
L68, 69	376-0297	74LS240
L71, 73, 93, 95, 105	376-0288	74LS244
L75	376-0197	74S04
L82	376-0296	74S37
L83	376-0004	7420
L87	376-0013	7475
L90	376-0205	74S32
L92	SEE CHART	Z80ACPU
L94	SEE CHART	Z80A-CTC
L96	376-0171	74148
L97	376-0286	74LS374
L98	376-0008	7442
L100-102	SEE CHART	2708
L104	376-0194	7411
L106	376-0285	74LS245
L111	376-0104	9602
L115	376-0045	74H04
L120	376-0068	7437

CONN 1

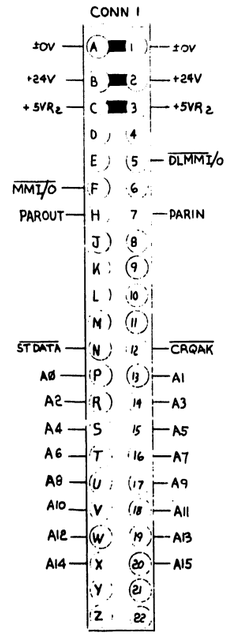

CONN 2

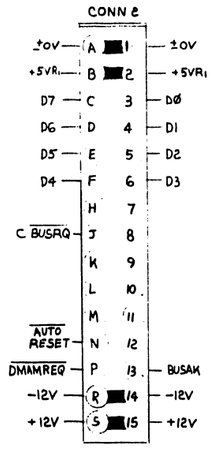

CONN 4

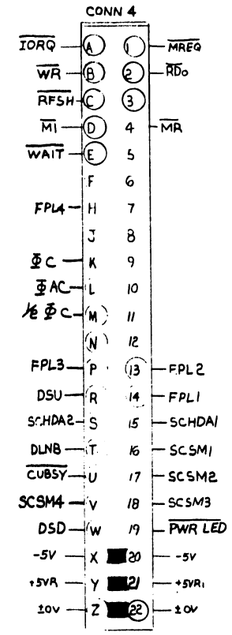

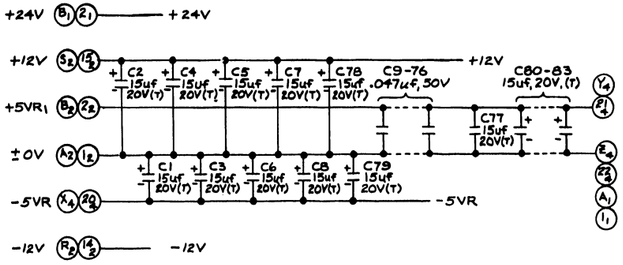

MNEMONIC	COORD.
A0-A15	(1F1)
AUTO RESET	(1E11)
BUSAK	(1A9)
CBUSRQ	(1C11)
CRQAK	(4A11)
CUBSY	(4G11)
D0-D7	(1A7)
DLMMI/O	(1A5)
DLNB	(4F11)
DMAMREQ	(4G11)
DSD	(4G2)
DSU	(4G2)
FPL1-FPL4	(4B3)
ΦAC	(1C1)
ΦC	(1C1)
½ ΦC	(1C1)

MNEMONIC	COORD.
IORQ	(1A7)
M1	(1A8)
MMI/O	(1A5)
MR	(1A10)
MREQ	(1A9)
PARIN	(4G8)
PAROUT	(4F1)
PWR LED	(4E1)
RDo	(1A10)
RFSH	(1A8)
SCHDA1, SCHDA2	(4B11)
SCSM1 - SCSM4	(4D11)
ST DATA	(4A9)
WAIT	(1G11)
WR	(1A8)

210 = 209 + 378 or 377

210	209	L92	L94	L100	L101	L102
7501-A	7501	377-0345	377-0368	377-0371	378-3048-R4	378-2666-R6	378-2667-R6
DATA LINK 1040, 7501-B	7501	377-0345	——	377-0371	378-2492-R1	378-2493-R1	378-2494-R1
7501-C 10MB, FLOPPY DISK ENG.	7501	377-0346	——	377-0371	378-2495-R1	378-2496-R1	378-2497-R1
7501-D BOOTSTRAP	7501	377-0345		377-0371	378-3047-R5	378-2666-R6	378-2667-R6

E-REV 3

BY	DATE	APPROVED BY	DATE
DWN [illegible]	10-79	E ENGR P.E.P.	3/3/23
CHK RLL	10-79	M ENGR	
		MFG ENGR	

WANG LABORATORIES, INC. LOWELL, MASS. U.S.A.

MATERIAL —

FINISH —

MODEL NO 140

SEE ENG SPECIFICATIONS No. —

TOL EX AS NOTED
XX ± FRAC ±
XXX ± ANG ±
FINISH √
SCALE 6/6 SHT 6 OF 6

TITLE: CPU AND MEMORY

WANG PART NUMBER: SEE CHART | SIZE: D | DRAWING NUMBER: 7501 | REV: 22

E SIZE DRAWING

NO.	REVISION	BY	DATE
00	ORIG. PER DWR # ECO5 APP. RLL 10-79	D.S.	4-23-79
01	REVISED PER ECN #11776 APP'D RLL 10-79	FSS	10-10-79
02	REVISED PER ECN #12176 APP'D RLL 10-79	FSS	10-10-79
03	REVISED PER ECN #12767 APP'D RLL 10-79	FSS	10-10-79
04	REVISED PER ECN # 13072 APP'D [illegible] 11-8-79	FSS	11-8-79
05	REVISED PER ECN's 13389 + 13390 APP'D [illegible] 11-16-79	FSS	11-16-79
06	REVISED PER ECN # 13548 APP'D [illegible] 12-12-79	FSS	12-12-79
07	REVISED PER ECN # 13854, 13930, 13935, 13953 APP'D [illegible] 2-6-80	FSS	2-6-80
08	REVISED PER ECN # 14236 APP'D [illegible] 3-11-80	FSS	3-11-80
09	REVISED PER ECN # 14734 APP'D [illegible] 4-30-80	FSS	4-30-80
10	REVISED PER ECN # 14799 APP'D [illegible] 5-29-80	FSS	5-29-80
11	REVISED PER ECO # 15711 APP'D [illegible] 9-9-80	T.K.	9-9-80
12	REVISED PER ECO # 17057 APP'D [illegible] 12-15-80	T.K.	12-15-80
13	REVISED PER ECO # 17427 APP'D [illegible] 1-5-81	FSS	1-5-81
14	REVISED PER ECO # 18329, 18331, 18332, 18333 APP'D [illegible] 3-11-81	FSS	3-13-81
15	REVISED PER ECO # 18523, 18531 APP'D [illegible] 4-2-81	FSS	4-2-81
16	REVISED PER ECO # 19109 APP'D [illegible] 6-5-81	FSS	6-5-81
17	REVISED PER ECO # 19110 APP'D [illegible] 6-5-81	LDC	6-5-81
18	REVISED PER ECO: 20,811 APP'D [illegible] 9-23-81	JEP	9-24-81
19	REVISED PER ECO: # 21303 APP'D [illegible] 12-7-81	KTH	12-7-81
20	REVISED PER ECO: 24,744 APP'D [illegible] 11-6-82	P.D.	11-6-82
21	REVISED PER ECO: 24,744 APP'D [illegible] 11-6-82	FSS	4-22-83

E-REV 3

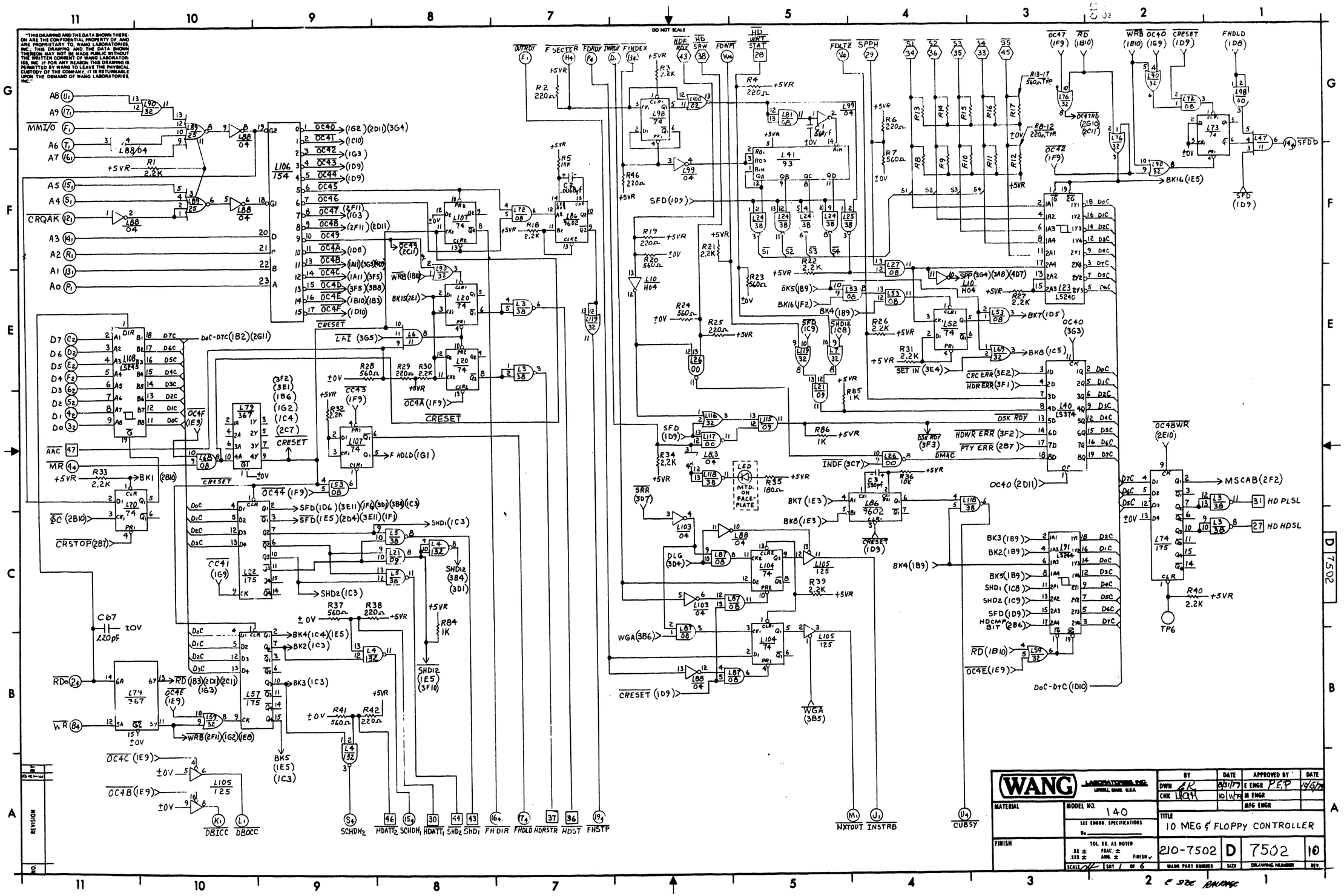
"THIS DRAWING AND THE DATA SHOWN THEREON ARE THE CONFIDENTIAL PROPERTY OF, AND ARE PROPRIETARY TO, WANG LABORATORIES, INC. THIS DRAWING AND THE DATA SHOWN THEREON MAY NOT BE MADE PUBLIC WITHOUT THE WRITTEN CONSENT OF WANG LABORATORIES, INC. IF FOR ANY REASON THIS DRAWING IS PERMITTED BY WANG TO LEAVE THE PHYSICAL CUSTODY OF THE COMPANY, IT IS RETURNABLE UPON THE DEMAND OF WANG LABORATORIES, INC."
DO NOT SCALE
WANG LABORATORIES, INC. LOWELL, MASS. U.S.A.
MODEL NO. 140
SEE ENGRG. SPECIFICATIONS
TITLE 10 MEG & FLOPPY CONTROLLER
210-7502 D 7502 10
WANG PART NUMBER SIZE DRAWING NUMBER REV.
SCALE SHT 1 OF 6
E SIZE RALEIGH
REVISION
NO.
DATE
BY
DWN
CHK
APPROVED BY
E ENGR
M ENGR
MFG ENGR
MATERIAL
FINISH
TOL. EX. AS NOTED
FRAC. ±
ANG. ±
FINISH
DBICC
DBOCC
SCHDH2
HDATT2
SCHDH1
HDATT1
SHD2
SHD1
FHDIR
FHDLD
HDRSTR
HDST
FHSTP
NXTOUT
INSTRB
CUBSY
MSCAB(2F2)
HD PLSL
HD HDSL
TP6
7502

"THIS DRAWING AND THE DATA SHOWN THEREON ARE THE CONFIDENTIAL PROPERTY OF, AND ARE PROPRIETARY TO, WANG LABORATORIES, INC. THIS DRAWING AND THE DATA SHOWN THEREON MAY NOT BE MADE PUBLIC WITHOUT THE WRITTEN CONSENT OF WANG LABORATORIES, INC. IF FOR ANY REASON THIS DRAWING IS PERMITTED BY WANG TO LEAVE THE PHYSICAL CUSTODY OF THE COMPANY, IT IS RETURNABLE UPON THE DEMAND OF WANG LABORATORIES, INC."

DO NOT SCALE

11 10 9 8 7 6 5 4 3 2 1

G F E D C B A

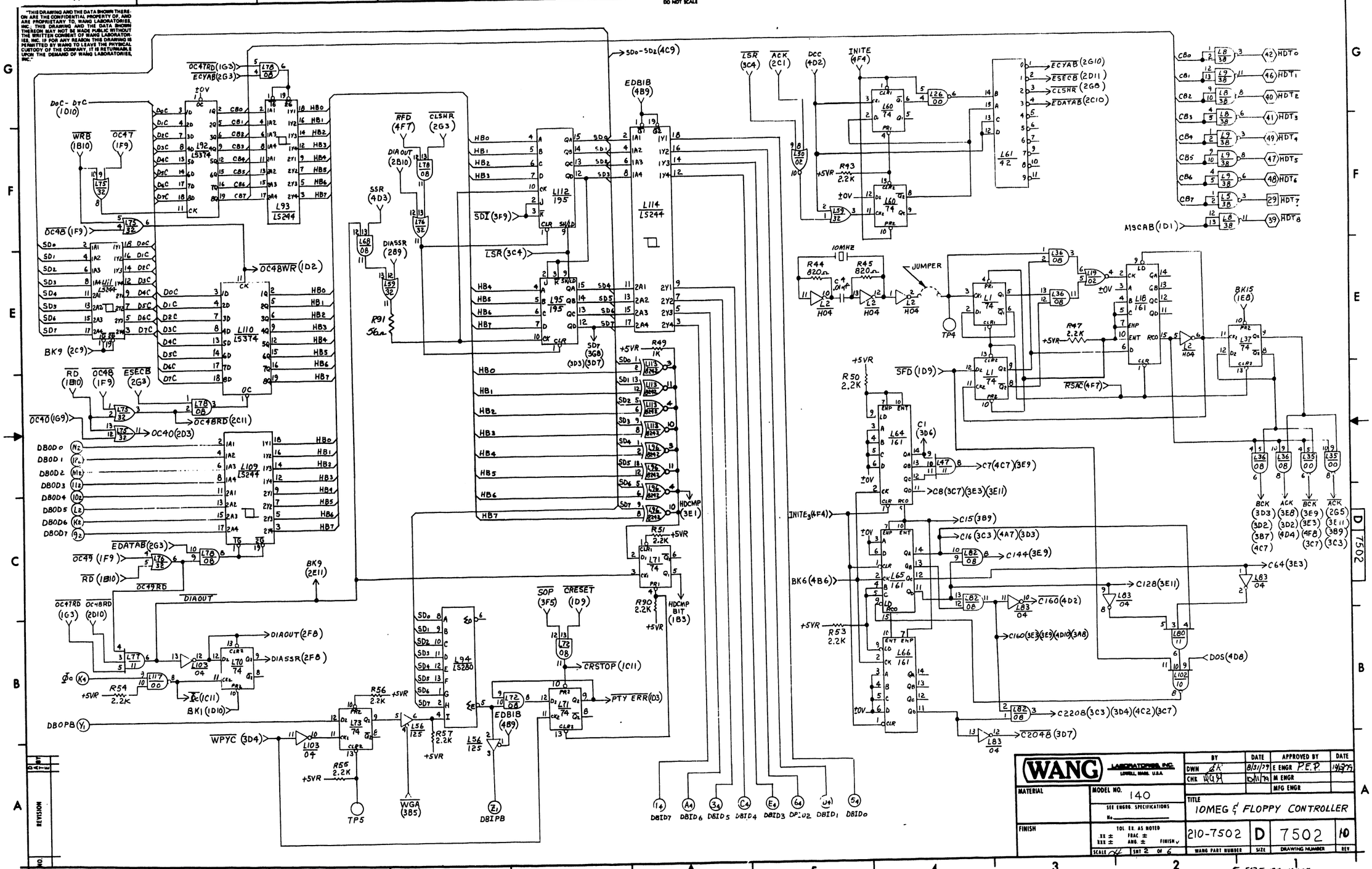

REVISION	BY	DATE	APPROVED BY	DATE
NO.	DWN	8/31/79	E ENGR P.E.P.	10/4/79
	CHK	9/11/79	M ENGR	
			MFG ENGR	

WANG LABORATORIES, INC. LOWELL, MASS. U.S.A.

MATERIAL

FINISH

MODEL NO. 140

SEE ENGRG. SPECIFICATIONS No.

TOL. EX. AS NOTED XX ± FRAC ± XXX ± ANG. ± FINISH √

SCALE none SHT 2 OF 6

TITLE 10MEG & FLOPPY CONTROLLER

210-7502 | D | 7502 | 10

WANG PART NUMBER | SIZE | DRAWING NUMBER | REV

E SIZE PACKAGE

D 7502

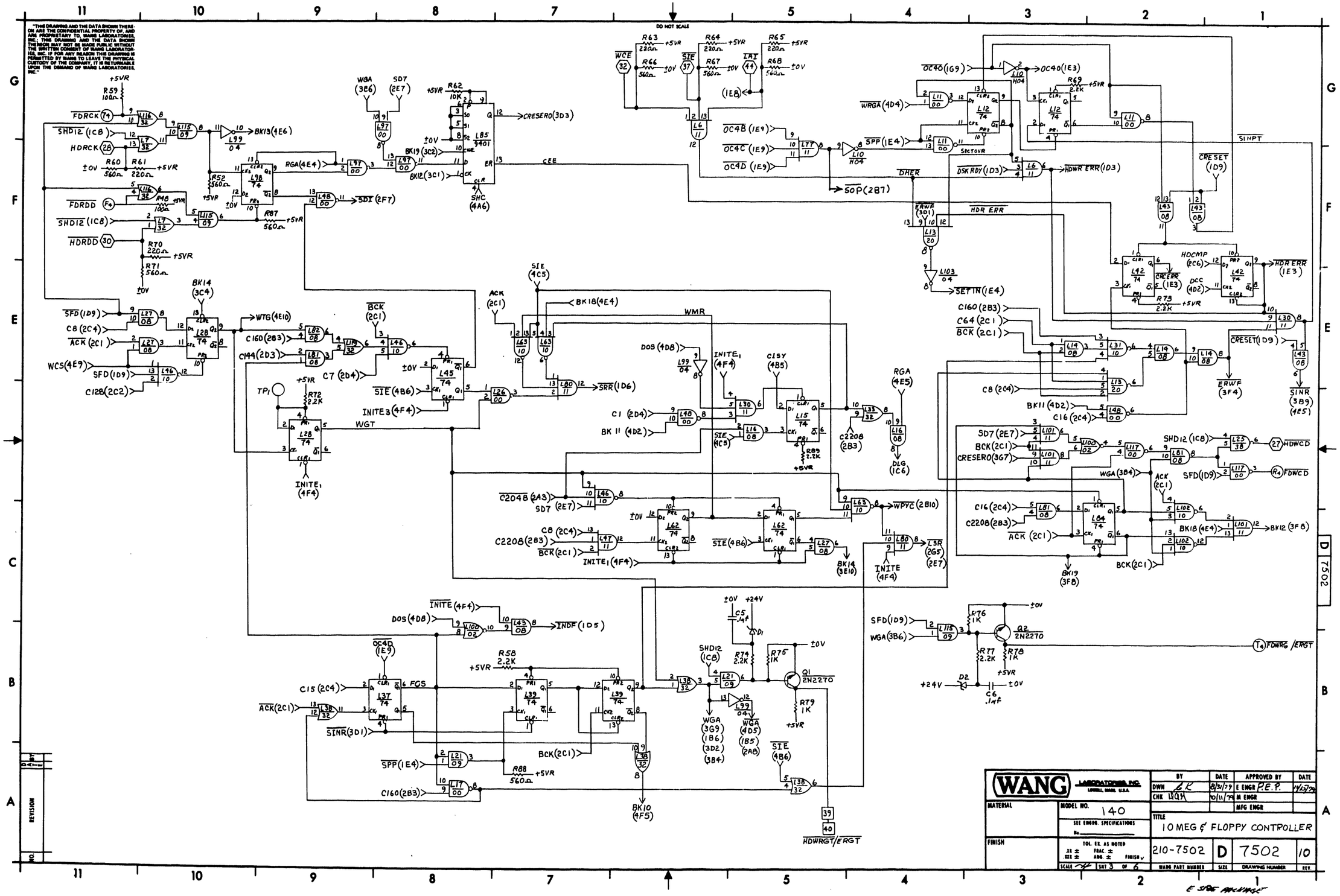

"THIS DRAWING AND THE DATA SHOWN THEREON ARE THE CONFIDENTIAL PROPERTY OF, AND ARE PROPRIETARY TO, WANG LABORATORIES, INC.; THIS DRAWING AND THE DATA SHOWN THEREON MAY NOT BE MADE PUBLIC WITHOUT THE WRITTEN CONSENT OF WANG LABORATORIES, INC. IF FOR ANY REASON THIS DRAWING IS PERMITTED BY WANG TO LEAVE THE PHYSICAL CUSTODY OF THE COMPANY, IT IS RETURNABLE UPON THE DEMAND OF WANG LABORATORIES, INC."
DO NOT SCALE
WANG LABORATORIES, INC. LOWELL, MASS. U.S.A.
MATERIAL
MODEL NO. 140
SEE ENGRG. SPECIFICATIONS
FINISH
TOL. EX. AS NOTED
SCALE
SHT 3 OF 6
BY
DATE
APPROVED BY
DATE
DWN
CHK
E ENGR
M ENGR
MFG ENGR
TITLE
10 MEG & FLOPPY CONTROLLER
210-7502
D
7502
10
WANG PART NUMBER
SIZE
DRAWING NUMBER
REV.
REVISION
NO.
DATE
BY
E SIDE PACKAGE

"THIS DRAWING AND THE DATA SHOWN THEREON ARE THE CONFIDENTIAL PROPERTY OF, AND ARE PROPRIETARY TO, WANG LABORATORIES, INC. THIS DRAWING AND THE DATA SHOWN THEREON MAY NOT BE MADE PUBLIC WITHOUT THE WRITTEN CONSENT OF WANG LABORATORIES, INC. IF FOR ANY REASON THIS DRAWING IS PERMITTED BY WANG TO LEAVE THE PHYSICAL CUSTODY OF THE COMPANY, IT IS RETURNABLE UPON THE DEMAND OF WANG LABORATORIES, INC."

DO NOT SCALE

BCK(2C1)
RFD(2F8)
RSAC(2D3)
31 HDRDG
BK10 (3A6)
INITE(3C4) (2G5)
INITE1(4D6)(3D9)(3E4)(3C6)
INITE3(3D8)(2C5)(4B9)
INITE (3C8)
SINR (3D1)
OC4C (1E9)
WTG(3E9)
WCS(3E11)
BK13(3G10)
BK18(3E7)(3C2)
RGA(3E4) (3F9)
C160(2B3)
RCS
RSA
TP2
RSO
2.2K
151R
SSR(2F9)
C160 (2C3)
DCC(2G5)(3E2)
DOS(3E9)(3C8)(2B2)
CISY
ACK(2C1)
WGA(3B5)
WRGA(3G4)
OC4B (1E9)
SPP(1E4)
SPPD
INITE1(4F4)
DOS
BK11(3D6)(3D3)
C2208(2B3)
SD0-SD2(2G6)
+5VR
R81 2.2K
TP3
R82 2.2K
+5V
R83 2.2K
C7 (2D4)
SIE
SIE(3E7)(3D6)
SCD
EDBIB(2G6)(2A7)
BCK(2C1)
BK6 (2C5)
SIE (3D8) (3C5) (3A5)
INITE3(4F4)
CISY(3E5)
SHC
SHC(3F8)
C16(2C4)

WANG LABORATORIES, INC. LOWELL, MASS. U.S.A.		BY	DATE	APPROVED BY	DATE
		DWN AR	6/31/79	E ENGR P.E.P.	11/8/79
		CHK [illegible]	10/11/79	M ENGR	
				MFG ENGR	
MATERIAL	MODEL NO. 140	TITLE 10 MEG & FLOPPY CONTROLLER			
	SEE ENGRG. SPECIFICATIONS No.				
FINISH	TOL. ES. AS NOTED .XX ± FRAC. ± .XXX ± ANG. ± FINISH √	210-7502	D	7502	10
	SCALE [illegible] SHT 4 OF 6	WANG PART NUMBER	SIZE	DRAWING NUMBER	REV.

D 7502

D 4 BY E

REVISION

NO.

B SIZE ARCHIVE

"THIS DRAWING AND THE DATA SHOWN THEREON ARE THE CONFIDENTIAL PROPERTY OF, AND ARE PROPRIETARY TO, WANG LABORATORIES, INC.; THIS DRAWING AND THE DATA SHOWN THEREON MAY NOT BE MADE PUBLIC WITHOUT THE WRITTEN CONSENT OF WANG LABORATORIES, INC. IF FOR ANY REASON THIS DRAWING IS PERMITTED BY WANG TO LEAVE THE PHYSICAL CUSTODY OF THE COMPANY, IT IS RETURNABLE UPON THE DEMAND OF WANG LABORATORIES, INC."

DO NOT SCALE

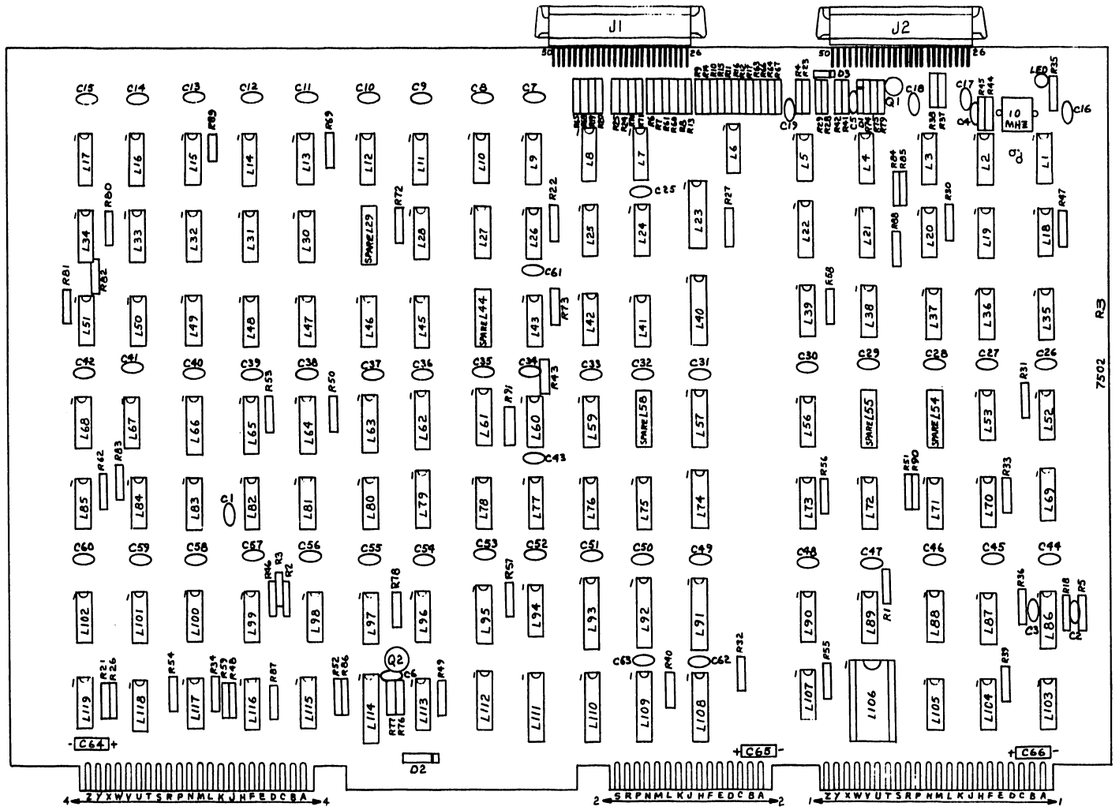

COMPONENT LAYOUT

WANG LABORATORIES, INC. LOWELL, MASS. U.S.A.	BY	DATE	APPROVED BY	DATE	
	DWN GK	8/31/79	E ENGR P.E.P.	10/15/79	
	CHK [illegible]	10/11/79	M ENGR		
MATERIAL	MODEL NO. 140		MFG ENGR		
	SEE ENGRG. SPECIFICATIONS No.	TITLE 10MEG & FLOPPY CONTROLLER			
FINISH	TOL. EX. AS NOTED .XX ± .XXX ± FRAC. ± ANG. ± FINISH ✓	210-7502	D	7502	10
	SCALE 1/4 SHT 5 OF 6	WANG PART NUMBER	SIZE	DRAWING NUMBER	REV.

E SIZE PACKAGE

REVISION

NO. | DATE | BY

D 7502

"THIS DRAWING AND THE DATA SHOWN THEREON ARE THE CONFIDENTIAL PROPERTY OF, AND ARE PROPRIETARY TO, WANG LABORATORIES, INC.; THIS DRAWING AND THE DATA SHOWN THEREON MAY NOT BE MADE PUBLIC WITHOUT THE WRITTEN CONSENT OF WANG LABORATORIES, INC. IF FOR ANY REASON THIS DRAWING IS PERMITTED BY WANG TO LEAVE THE PHYSICAL CUSTODY OF THE COMPANY, IT IS RETURNABLE UPON THE DEMAND OF WANG LABORATORIES, INC."

DO NOT SCALE

LOCATION	TYPE	PART NO.
L1,12,15,20,28,34,37,39,42,45,51,52,60,62,67,70,73,84,98,104,107,71	7474	376-0006
L2,10	74H04	376-0045
L3,58,9,29,25,118	7438	376-0128
L11,17,26,35,48,97,117	7400	376-0002
L6,30,47,49,77,80,101	7411	376-0194
L7,33,38,59,69,75,76,90,116,119	7432	376-0093
L13,32	7420	376-0004
L14,16, 27,36,43,53,68,72,78,81,82,87	7408	376-0081
L18,64,65,66	74161	376-0094
L19,50,100	7402	376-0016
L22,57,74	74175	376-0119
L23	74LS240	376-0297
L31,46,63,102	7410	376-0003
L40,92,110	74LS374	376-0286
L41	7493	376-0011
L56,105	74125	376-0324
L61	7442	376-0008
L91,93,109,111,114	74LS244	376-0288
L79	74367	376-0176
L83,88,103,99	7404	376-0010
L85	9401	376-0440
L86	9602	376-0104
L89	7425	376-0092
L94	74LS280	376-0242
L95,112	74195	376-0097
L96,113	8242	376-0040
L106	74154	376-0090
L108	74LS245	376-0285
L29	SPARE	
L44	SPARE	
L54	SPARE	
L55	SPARE	
L58	SPARE	
L21,115	7409	376-0085
L9	74132	376-0266

COMPONENT	PART NO.	TYPE
R1,3,18,21,22,26,27,30-34,39,40,43,47,54,51,53-58,63,72-74,77,80,81,82,83,89,90	330-3022	2.2K, ¼W, 10%
R2,4,6,8-12,19,25,29,38,42,61,63,64,65,70,96	330-2022	220Ω, ¼W, 10%
R5,36,62	330-4010	10K, ¼W, 10%
R7,13-17,20,23,24,28,37,41,60,67,68,71,66,87,88,52	330-2056	560Ω, ¼W, 10%
R35	330-2018	180Ω, ¼W, 10%
R44,45	330-2082	820Ω, ¼W, 10%
R42,75,76,78,79,81,85,86	330-3010	1K, ¼W, 10%
R59,98	330-2010	100Ω, ¼W, 10%
R91	330-1056	56Ω, ¼W 10%
C2	300-1911	.0068μF 100V
C1	300-1560	560pf, 500V
C3	300-1330	330pf, 500V
C4	300-1903	.01μF, 25V
C5,6	300-1901	.1μF
C7-63	300-1966	.047μF 50V
C66	300-4032	10μF, 35V, 10% (T)
C64,65	300-4022	15μF, 20V TA.
C67	300-1220	220pF CER
Q1,2	375-9001	TRANSIPAD LGE
Q1,2	375-1009	2N2270
LED 1	370-0026	MV5024 RED
D1,2	380-2120	ZEN IN759A
D3	380-4000	EM403
XTAL	321-0008	10MHZ
J1, J2	350-1045	50 PIN CONN.

MNEMONIC	COORD.
A0-A9	1F11
AAC	1D11
CRQAK	1F11
CUBSY	1A4
D0 - D7	1D11
DBICC	1A10
DBID0-DBID7	2A6
DBIPB	2A8
DBOCC	1A10
DBOD0-DBOD7	2D11
DBOPB	2B11
FDLTΣ	1G5
FDRCK	3G11
FDRDD	3F11
FDRDY	1G7
FDWCD	3D1
FDWRG/ERGT	3B1
FHDIR	1A7
FHDLD	1A7
FHSTP	1A7
FINDEX	1G6
FDWPT	1G6
F SECTOR	1G7
HDATT1	1A8
HDATT2	1A8
HDF RDY	1G6
HDHDSL	1C1
HDPLSL	1D1
HDRCK	3F11

MNEMONIC	COORD.
HDRDD	3F11
HDRSTR	1A7
HDRDG	4F1
HDSRW	1G6
HDST	1A7
HDT0 - HDT8	2G1
HDWCD	3D1
HDWRGT/ERGT	3A5
HD WRT STAT	1G5
INRDY	1G6
INSTRB	1A4
ØC	2B11
LAI	3G5
MMI/O	1G11
MR	1D11
MXT OUT	1A4
OUT RDY	1G7
RDO	1E11
S1 - S5	1G4
SCHDH1	1A8
SCHDH2	1A9
SFDD	1G1
SHD1	1A8
SHD2	1A8
SIE	3G6
SPPH	1G4
WCE	3G6
WR	1B11

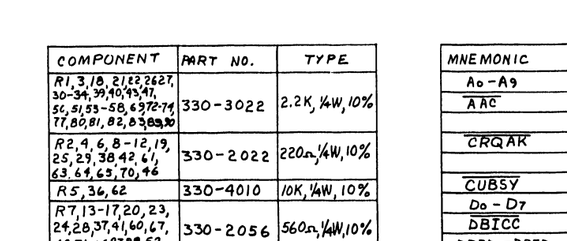

BREAK	FROM	TO
1	1D10	2B10
2	1C3	1B9
3	1C3	1B9
4	1B9	1C4, 1E5
5	1B9	1C3, 1E5
6	4B6	2C5
7	1E3	1D5
8	1E3	1C5
9	2C9	2E11
10	3A6	4F5
11	4D2	3D3, 3D6
12	3C1	3F8
13	4E6	3G10
14	3C4	3E10
15	1E8	2E1
16	1F2	1E5

LOCATION	TYPE	SPARES
L2	74H04	2
L4	74132	1
L5	7438	1
L7	7432	1
L19	7402	3
L25	7438	1
L35	7400	2
L50	7402	1
L52	7474	1
L56	74125	2
L69	7432	3
L79	74367	3
L83	7404	1
L100	7402	1
L103	7404	1
L118	7438	2

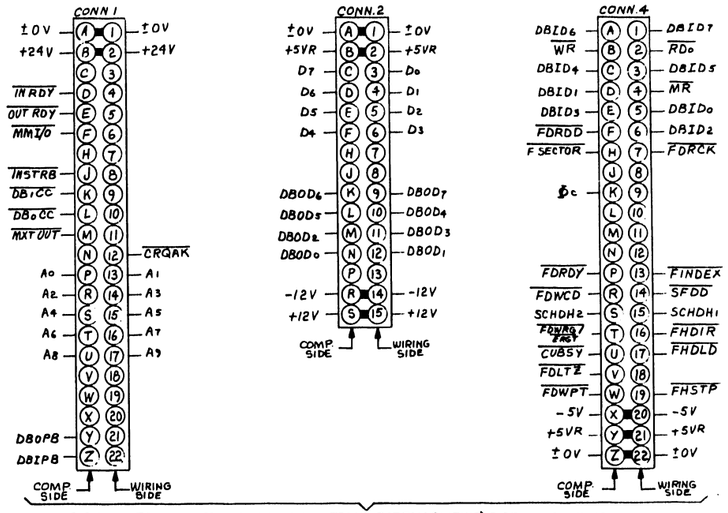

SIGNAL-TERMINAL DESIGNATIONS, VIEW FROM BOTTOM (WIRING) SIDE OF CONNECTOR

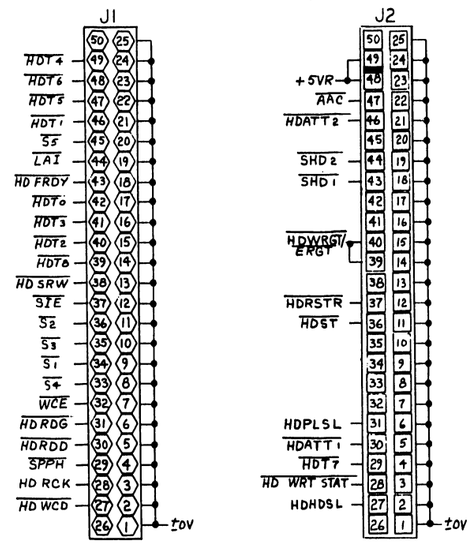

E-REV 4

NO.	REVISION	BY	DATE	APPROVED
9	ORIGINATED PER ECN# 10 APP'D: WH	ER	8-31-79	
11/0	REVISED PER ECN# 10562 APP'D: WH	ER	8-31-79	
2/1	REVISED PER ECN# 10709 APP'D: WH	ER	8-31-79	
3/1	REVISED PER ECN#10675 APP'D: WH	ER	9-1-79	
4/2	REVISED PER ECN#12930 APP'D: WH	KBL	10-26-79	
5/2	REVISED PER ECN# 13120 APP'D: AEA	AEA	11-8-79	
6/3	REVISED PER ECN# 13902D APP'D: WH	KBL	11-26-79	
7/3	REVISED PER ECN# 13933 APP'D: WH	KBL	12-10-79	
8/4	REVISED PER ECN# 13965 APP'D: WH	KBL	12-26-79	
9/4	REVISED PER ECO# 20211 APP'D: WH	KBL	3-30-80	
10/4	REVISED PER ECO# 22712 APP'D: WH	KBL	4-27-80	

	BY	DATE	APPROVED BY	DATE
DWN	ER	8/31/79	E ENGR P.E.P.	10/15/79
CHK	WH	9/1/79	M ENGR	
			MFG ENGR	

WANG LABORATORIES, INC. LOWELL, MASS. U.S.A.

MATERIAL

MODEL NO. 140

SEE ENGRG. SPECIFICATIONS No.

FINISH

TOL. EX. AS NOTED XX ± . FRAC ± XXX ± ANG. ± FINISH √

SCALE NONE SHT 6 OF 6

TITLE 10 MEG & FLOPPY CONTROLLER

210-7502 | D | 7502 | 10

WANG PART NUMBER | SIZE | DRAWING NUMBER | REV

6 SIZE PACKAGE

D 7502

"THIS DRAWING AND THE DATA SHOWN THEREON ARE THE CONFIDENTIAL PROPERTY OF, AND ARE PROPRIETARY TO, WANG LABORATORIES, INC.; THIS DRAWING AND THE DATA SHOWN THEREON MAY NOT BE MADE PUBLIC WITHOUT THE WRITTEN CONSENT OF WANG LABORATORIES, INC. IF FOR ANY REASON THIS DRAWING IS PERMITTED BY WANG TO LEAVE THE PHYSICAL CUSTODY OF THE COMPANY, IT IS RETURNABLE UPON THE DEMAND OF WANG LABORATORIES, INC."

DO NOT SCALE

A_6 - A_9 (3C1) >

$\overline{RD_0}$ (JAG)

CBUSRQ (3A7)

ST DATA (H)

Φ_C (K)

PAR OUT (H)

P_7 (6A5) >

R45 150Ω

C92 220pf

R46 470Ω

R47 330Ω

C85 220pf

R44 120Ω

C93 22pf

DLMMIO (5)

MR (14)

BUSAK (13)

PAR IN (7)

CLK (5BB) >

ICLK

$\overline{BRD}$ (2C4)(3C11)

$\overline{BMR}$ (6D8)(3G6)

ACKNLG (3E7)

TCS (3D8)

$\overline{BD_7}$ (5G11)

BSRQ (3E8)

MMDS (3C10)

$\overline{TSC}$ (3F10)

$\overline{ZBWPB}$ (4F10)

$\overline{PDDEY03}$

BA_0 BA_1 BA_2 BA_3 BA_4 BA_5

L112 L110 L109 S2447

L82 L81 L82 S138

L73 LS04

L74 LS27

L08 S20

L20 S74

L37 S74

$\overline{OCCD_0}$ (6C11) $\overline{OCCD_1}$ (6C10) $\overline{OCCD_3}$ (4G6) $\overline{OCCD_4}$ $\overline{OCCD_5}$ (3F7) $\overline{OCCD_6}$ (5B2)

$\overline{OCCO}$ (6D11) $\overline{OCC_1}$ (6E10) $\overline{OCC_2}$ (4F11)(4D2) $\overline{OCC_3}$ (4E6) $\overline{OCC_4}$ $\overline{OCC_6}$ (5C2) $\overline{OCC_7}$

$\overline{OCCE}$ (6F11) (5B11) $\overline{OCCF}$ (2C4)(3D11)

$\overline{DATOS}$ (3B11)(3F7)(4F11)(5B11)(6D10)

DATO (3G4)

$\overline{DATE}$ (6B11)

$\overline{DBECC}$ $\overline{DBOCC}$

$\overline{SLCT00}$

+5VR P1 2.2K

R2 2.2K

R3 2.2K

R4 2.2K

R5 2.2K

R6 2.2K

K7 2.2K

$\overline{DIAG}$ (3C10) >

BLK (4B8) >

BLK BSY (3A10)(6C11)

OBCMD (3D11)

CLR DLW (2B2)

DLOPCP (2C1) >

DL WAIT (3F11)

DL WAIT (2D4)(3F9)

DI00 (3F9)

$\overline{CLR\ RD}$ (4D9)

$\overline{CLR\ WR}$ (2E4)

$\overline{OBRQ}$ (5D3)

OBRD (2C9) (4B10)

$\overline{BWRA}$ (2F8)

BWRA (4C10)

$\overline{OBRE}$ (5E2)

BLK RD P (3D11)

BLK WP (3D11)

$\overline{ASCMD}$ (2E4) >

BD_7 (3F1)

BD_6 (3F1)

BLKP (3D9)

RDCMD (2D11)

$\overline{RST}$ (2F5)

$\overline{PST}$ (4C3)

$\overline{BLK\ AUTO}$ (CHR) (4B12)

BLK AUTO (4B12)

$\overline{BLK\ RD}$ (3C11) (5B4)

BLK RD (3C11) (4B10) (3F5) (5E5) (3B7)

$\overline{BLK\ WR}$ (2G8) (5D4)

BLK WR (3E11) (3F7) (4B6) (5G8)

$\overline{BGN}$ (2F3)(4B7)

C BGN (3E7) >

BGN (5E11)(4D9) (2E8)

$\overline{SBO\ CLR}$ (5D8) >

ECO NO. 269540 PENDING

WANG LABORATORIES, INC. LOWELL, MASS. U.S.A.		BY	DATE	APPROVED BY	DATE
		DWN		E ENGR	
		CHK		M ENGR	
MATERIAL	MODEL NO. 140			MFG ENGR	
	SEE ENGRG. SPECIFICATIONS No.	TITLE	DATA LINK CONTROL		
FINISH	TOL. EX. AS NOTED .XX ± .XXX ± FRAC. ± ANG. ± FINISH √	210-7503	D	7503	15
	SCALE — SHT 1 OF 15	WANG PART NUMBER	SIZE	DRAWING NUMBER	REV

REVISION NO. SEE SHT 8

D7503

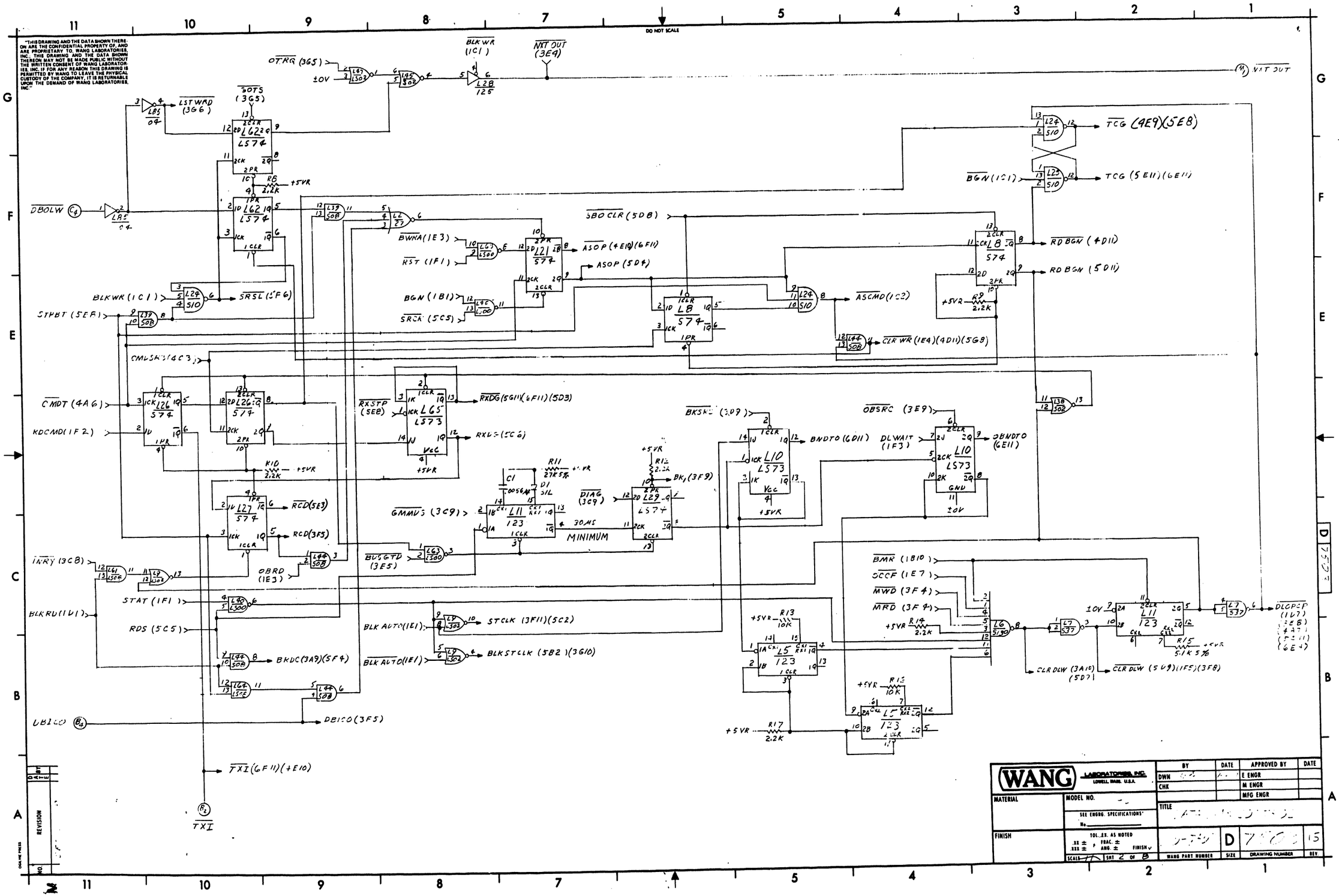

DO NOT SCALE
"THIS DRAWING AND THE DATA SHOWN THEREON ARE THE CONFIDENTIAL PROPERTY OF, AND ARE PROPRIETARY TO, WANG LABORATORIES, INC.. THIS DRAWING AND THE DATA SHOWN THEREON MAY NOT BE MADE PUBLIC WITHOUT THE WRITTEN CONSENT OF WANG LABORATORIES, INC. IF FOR ANY REASON THIS DRAWING IS PERMITTED BY WANG TO LEAVE THE PHYSICAL CUSTODY OF THE COMPANY, IT IS RETURNABLE UPON THE DEMAND OF WANG LABORATORIES, INC."
OTRQ (3G5)
BLKWR (1C1)
NXT OUT (3E4)
NXT OUT
LSTWRD (3G6)
GOTS (3G5)
DBOLW
TCG (4E9)(5E8)
BGN (1C1)
TCG (5E11)(6E11)
SBO CLR (5D8)
BWKA (1E3)
RST (1F1)
ASOP (4E10)(6F11)
ASOP (5D4)
RD BGN (4D11)
RD BGN (5D11)
BGN (1B1)
SRCK (5C5)
ASCMD (1C2)
CLR WR (1E4)(4D11)(5G8)
BLKWR (1C1)
SRSL (5F6)
STPBT (5E8)
CMDT (4A6)
RDCMD (1F2)
RXSTP (5E8)
RXDG (5G11)(6F11)(5D3)
RXDG (5C6)
BKSRC (3D9)
BNDTO (6D11)
OBSRC (3E9)
DLWAIT (1F3)
OBNDTO (6E11)
RCD (5E3)
RCD (3F5)
GMMDS (3C9)
DIAG (3C9)
BK1 (3F9)
MINIMUM
30μS
BUSGTD (3E5)
OBRD (1E3)
INRY (3C8)
STAT (1F1)
BLKRD (1D1)
RDS (5C5)
BLK AUTO (1E1)
STCLK (3F11)(5C2)
BLKSTCLK (5B2)(3G10)
BRDC (3A9)(5F4)
DBICO (3F5)
DBICO
TXI (6F11)(+E10)
TXI
BMR (1B10)
OCCF (1E7)
MWD (3F4)
MRD (3F4)
CLR DLW (3A10)(5D7)
CLR DLW (5D9)(1F5)(3F8)
DLOPCP (1D7)
WANG LABORATORIES, INC. LOWELL, MASS. U.S.A.
MATERIAL
MODEL NO.
SEE ENGRG. SPECIFICATIONS
FINISH
TOL. .XX AS NOTED
SCALE
SHT 2 OF 8
BY
DATE
APPROVED BY
DWN
CHK
E ENGR
M ENGR
MFG ENGR
TITLE
D
WANG PART NUMBER
SIZE
DRAWING NUMBER
REV.
REVISION

"THIS DRAWING AND THE DATA SHOWN THEREON ARE THE CONFIDENTIAL PROPERTY OF, AND ARE PROPRIETARY TO, WANG LABORATORIES, INC. THIS DRAWING AND THE DATA SHOWN THEREON MAY NOT BE MADE PUBLIC WITHOUT THE WRITTEN CONSENT OF WANG LABORATORIES, INC. IF FOR ANY REASON THIS DRAWING IS PERMITTED BY WANG TO LEAVE THE PHYSICAL CUSTODY OF THE COMPANY, IT IS RETURNABLE UPON THE DEMAND OF WANG LABORATORIES, INC."

DO NOT SCALE

BKSRC (3D9)

RXPD1 – RXPD3 (5G4)

BLK STCLK (2B7)

BLK OSS (6D11)

OBOSS (6E11)

STCLK (2C7)

DL WAIT (1G3)

OP COMP (6E11)

MSTR (6D9)

BLK (4B7)

CBGN (1B2)

DLOPCP (2B1)

MSTR (5E4)

BSRQ (1E10)

OBCMD (2D4)(5B3)

OBCMD (1F5)

BK1 (5E3)

BLK WP (1C4)

BLKWP (1E2)

BLK KDP (1C2)

BKSRC (2D6)(5E3)(3G10)

TCS (1B10)

CCCK (1E7)

HMK (1B10)

S.W.MDS (2C8)

MMDS (1E10)

IN RDY (D)

INRDY (2C11)(2G11)

BU0 (3G1)

DIAG (1C4)(2D7)(5F11)(3E9)

DIAG (1B10)(6D11)

OCDO (1D7)

DATOS (1A7)

BU6 (3F2)

IE (6C11)

CLR DLW (2B3)

BLK BSY (1G5)

DLA'B

DRDC (2B9)

OUTRDY

OUTRDY (6G11)

GOTS (2G10)

OTRQ (2G3)

JUMPER

DATO (1B7)

D0 – D7 (6A4)

LST WRD (2G10)

OCD5 (1C7)

DATO5 (1A7)

OTRDY

BK1 (2D6)

TSC (1E10)

DLWAIT (1F3)

DI00 (1C5)

CLRC_W (2B2)

BLK WR (1C1)

RCD(_C)

PBT (5E6)

BUIRD (1D1)

DBI00 (2B7)

MRD (2C4)

MWD (2C4)

NXT OUT (2G7)

DIAG (3C10)

BUSGTD (2C9)

BK2 (3B4)

BK2 (3F9)

BAHC (4F5)

BD0 – BD7 (1F7)

BD0 – BD7 (6F10)

BL0 – BL7 (1F5)(3F10)

BL0 – BL7 (1F5)

A0 – A9 (1J11)

BLK RD (1D1)

INSTRB

DMAMREQ

ACKNLG (1B10)

BK2 (3F9)

CBUSRQ (1E11)

RD0 (1E11)

CBUSRQ

WTMME

RFMME

RD0

MDMARS

MMWRS

DLA'B

+5VR

R16 2.2K

R17 2.2K

R18 10K

R19 2.2K

R20 2.2K

R21 2.2K

R22 2.2K

R23 2.2K

R24 2.2K

R25 2.2K

R26 10K

R39 10K

R40 10K

R41 10K

R42 2.2K

BY	DATE	APPROVED BY	DATE
DWN		E ENGR	
CHK		M ENGR	
		MFG ENGR	

WANG LABORATORIES, INC. LOWELL, MASS. U.S.A.

MATERIAL

MODEL NO. 175

SEE ENGRG SPECIFICATIONS No.

FINISH

TOL. EX. AS NOTED XX ± FRAC. ± XXX ± ANG. ± FINISH

TITLE DATA LINK

210-7503 D 75023 5

SCALE FULL SHT 3 OF 8

WANG PART NUMBER | SIZE | DRAWING NUMBER | REV.

REVISION

NO. | SEE SHT 8

ORIG. RE PRESS

"THIS DRAWING AND THE DATA SHOWN THEREON ARE THE CONFIDENTIAL PROPERTY OF, AND ARE PROPRIETARY TO, WANG LABORATORIES, INC. THIS DRAWING AND THE DATA SHOWN THEREON MAY NOT BE MADE PUBLIC WITHOUT THE WRITTEN CONSENT OF WANG LABORATORIES, INC. IF FOR ANY REASON THIS DRAWING IS PERMITTED BY HAND TO LEAVE THE PHYSICAL CUSTODY OF THE COMPANY, IT IS RETURNABLE UPON THE DEMAND OF WANG LABORATORIES, INC."

DO NOT SCALE

BD0 -BD7 (3F1)

OCD3 (1D7)

ZEWPB (1E10)

DATCS (1A7)

CCCC (1G7)

TXI (2A9)

ASOP (2F6)

TCG (2G2)

BSRCK (5C5)

BGN (1B1)

CLR WR (1E4)

RD BCH (2E2)

CLR RD (1F4)

BWRA (1E3)

STAT (1F1)

RST (1E1)

BLK WR (1C1)

OBRD (1E3)

BLK RD (1D1)

BLK (3E9)

BLK (1G7)(6E4)

BGN (1C1)

STPBT (5E8)

SRCK (5C5)

DLOPCP (2C1)

CMDT (2D11)(5G8)

CMDT (5D4)(6E11)

BAHC (3F2)

OCC3 (1G7)

+5VR R27 2.2K

+5VR R28 2.2K

+5VR R29 2.2K

+5VR R30 2.2K

WRCMD

RXPD10 (5F3)

STXD (6F11)

CMDSR3 (2E10)

OCC2 (1G7)

TD0-TD7 (5B1)

REVISION	BY	DATE	APPROVED BY	DATE
SEE SHT 8	DWN	7-17-79	E ENGR	
	CHK		M ENGR	
			MFG ENGR	

WANG LABORATORIES, INC. LOWELL, MASS. U.S.A.

MATERIAL

FINISH

MODEL NO. 190

SEE ENGRG. SPECIFICATIONS

No.

TOL. EX. AS NOTED .XX ± FRAC. ± .XXX ± ANG. ± FINISH √

SCALE — SHT 4 OF 9

TITLE DATA LINK CONTROL

110-7503 | D | 7503 | 15

WANG PART NUMBER | SIZE | DRAWING NUMBER | REV.

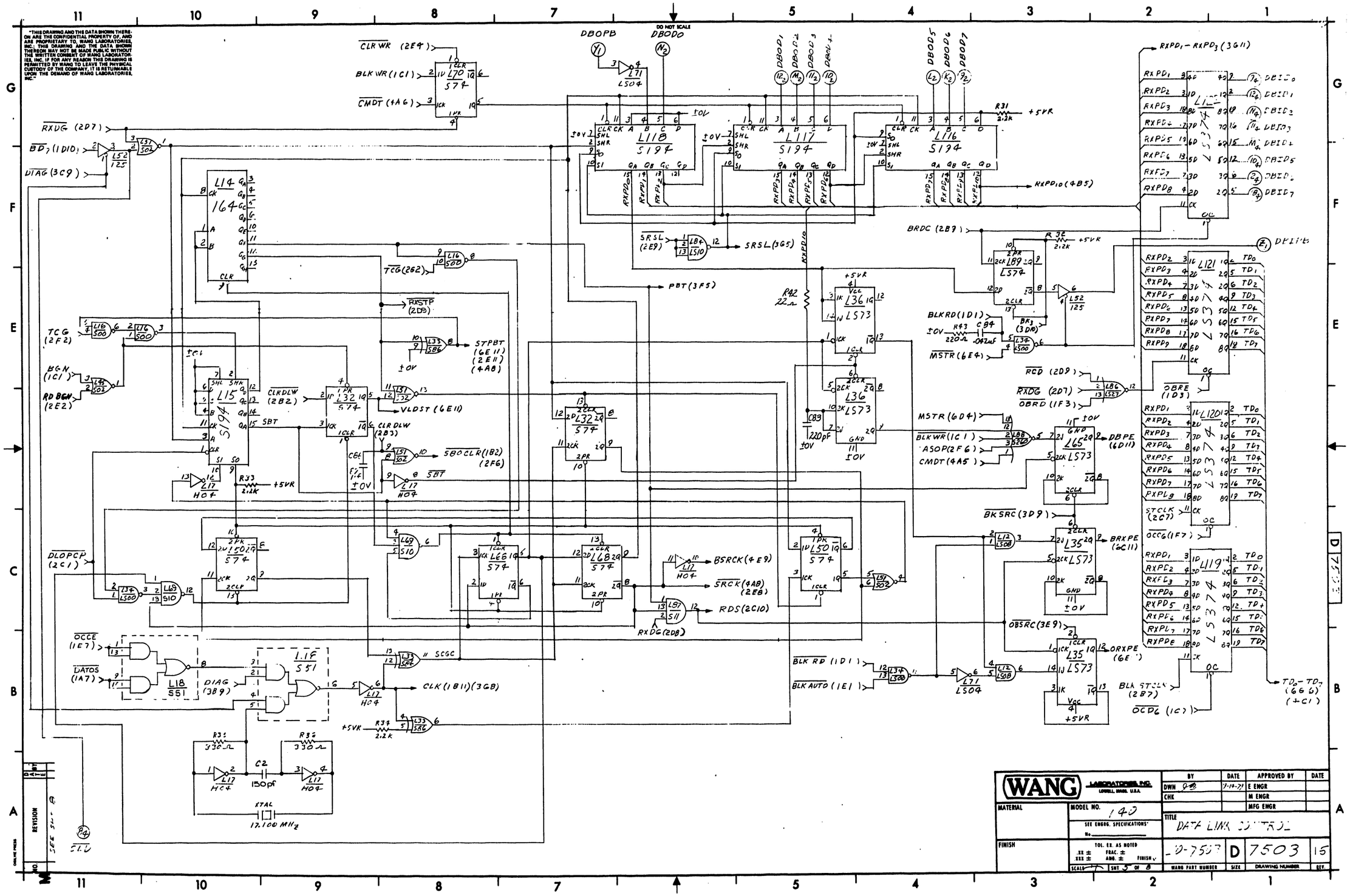

"THIS DRAWING AND THE DATA SHOWN THEREON ARE THE CONFIDENTIAL PROPERTY OF, AND ARE PROPRIETARY TO, WANG LABORATORIES, INC.; THIS DRAWING AND THE DATA SHOWN THEREON MAY NOT BE MADE PUBLIC WITHOUT THE WRITTEN CONSENT OF WANG LABORATORIES, INC. IF FOR ANY REASON THIS DRAWING IS PERMITTED BY WANG TO LEAVE THE PHYSICAL CUSTODY OF THE COMPANY, IT IS RETURNABLE UPON THE DEMAND OF WANG LABORATORIES, INC."
DO NOT SCALE
DBOPB
DBODO
CLR WR (2E4)
BLK WR (1C1)
CMDT (4A6)
RXDG (2D7)
BD7 (1D10)
DIAG (3C9)
L14 164
L15 S194
L32 S74
L118 S194
L117 S194
L116 S194
L70 S74
L71 LS04
L84 LS10
SRSL (2E9)
SRSL (3G5)
PBT (3F5)
TCG (2F2)
BGN (1C1)
RD BGN (2E2)
RXSTP (2D9)
STPBT (6E11) (2E11) (4A8)
CLRDLW (2B2)
VLDST (6E11)
CLR DLW (2B3)
SBOCLR (1B2) (2F6)
SBT
R33 2.2K
+5VR
DLOPCP (2C1)
L68 S74
L66 S74
L50 S74
BSRCK (4E9)
SRCK (4A8) (2E8)
RDS (2C10)
RXDG (2D8)
OCCE (1E7)
DATOS (1A7)
L18 S51
DIAG (3B9)
L19 S51
SCGC
CLK (1B11) (3G8)
R34 2.2K
R35 330Ω
R36 330Ω
C2 150pf
XTAL 17.100 MHz
R42 22Ω
L36 LS73
L36 LS73
C83 220pF
BRDC (2B9)
L89 LS74
BLKRD (1D1)
MSTR (6E4)
RCD (2D9)
RXDG (2D7)
OBRD (1F3)
MSTR (6D4)
BLKWR (1C1)
ASOP (2F6)
CMDT (4A5)
L65 LS73
DBPE (6D11)
BKSRC (3D9)
L35 LS73
BRXPE (6C11)
OBSRC (3E9)
L35 LS73
ORXPE (6E11)
BLK RD (1D1)
BLK AUTO (1E1)
L71 LS04
RXPD1 – RXPD3 (3G11)
L122 LS374
L121 LS374
L120 LS374
L119 LS374
DBIPB
OBRE (1D3)
STCLK (2C7)
OCC6 (1F7)
BLK STCLK (2B7)
OCD6 (1C7)
TD0 – TD7 (6G6) (4C1)
R31 2.2K
R32 2.2K
+5VR
WANG LABORATORIES, INC. LOWELL, MASS. U.S.A.
MATERIAL
MODEL NO. 140
SEE ENGRG. SPECIFICATIONS
FINISH
TOL. EX. AS NOTED
.XX ± FRAC. ±
.XXX ± ANG. ± FINISH
SCALE
SHT 5 OF 8
BY
DATE
APPROVED BY
DATE
DWN
7-14-71
E ENGR
CHK
M ENGR
MFG ENGR
TITLE
DATA LINK CONTROL
D-7503
D
7503
15
WANG PART NUMBER
SIZE
DRAWING NUMBER
REV.
REVISION
SEE SHT 8

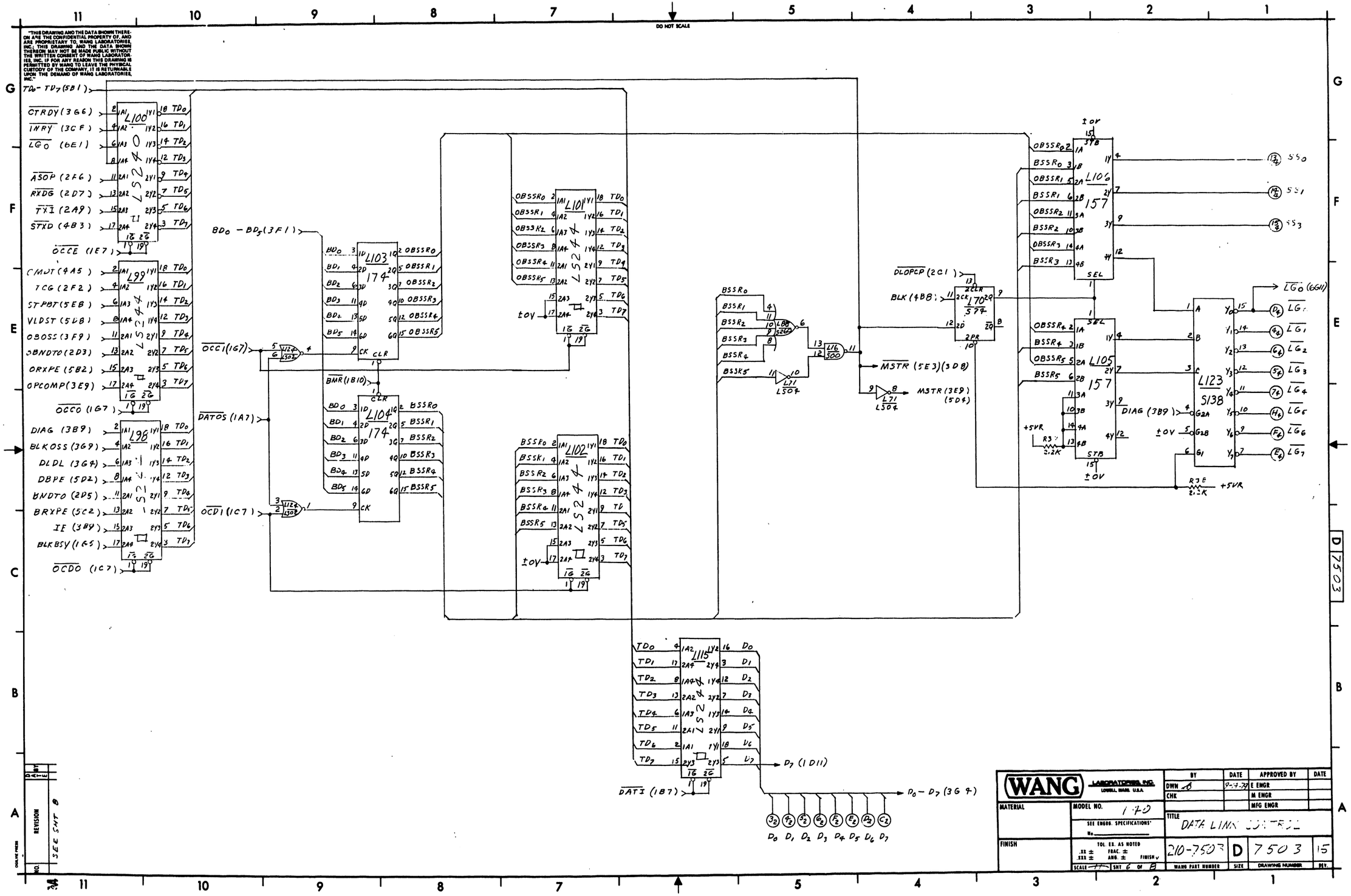

WANG LABORATORIES, INC. LOWELL, MASS. U.S.A.		BY	DATE	APPROVED BY	DATE
		DWN	9-4-79	E ENGR	
		CHK		M ENGR	
				MFG ENGR	
MATERIAL	MODEL NO. 170 SEE ENGRG. SPECIFICATIONS No.	TITLE DATA LINK CONTROL			
FINISH	TOL. EX. AS NOTED .XX ± .XXX ± FRAC. ± ANG. ± FINISH	210-7503	D	7503	15
	SCALE SHT 6 OF 8	WANG PART NUMBER	SIZE	DRAWING NUMBER	REV.

REVISION NO. SEE SHT 8

D 7503

"THIS DRAWING AND THE DATA SHOWN THEREON ARE THE CONFIDENTIAL PROPERTY OF, AND ARE PROPRIETARY TO, WANG LABORATORIES, INC. THIS DRAWING AND THE DATA SHOWN THEREON MAY NOT BE MADE PUBLIC WITHOUT THE WRITTEN CONSENT OF WANG LABORATORIES, INC. IF FOR ANY REASON THIS DRAWING IS PERMITTED BY WANG TO LEAVE THE PHYSICAL CUSTODY OF THE COMPANY, IT IS RETURNABLE UPON THE DEMAND OF WANG LABORATORIES, INC."

DO NOT SCALE

7503 R4

REVISION	BY	DATE
SEE SHT 8		

		BY	DATE	APPROVED BY	DATE
WANG LABORATORIES, INC. LOWELL, MASS. U.S.A.	DWN	RL	3-14-77	E ENGR	
	CHK			M ENGR	
				MFG ENGR	

MATERIAL	MODEL NO. 140	TITLE DATA LINK CONTROL
	SEE ENGRG. SPECIFICATIONS No.	
FINISH	TOL EX AS NOTED XX ± FRAC ± XXX ± ANG ± FINISH √	210-7503 / D / 7503 / 15
	SCALE FF SHT 7 OF 8	WANG PART NUMBER / SIZE / DRAWING NUMBER / REV

"THIS DRAWING AND THE DATA SHOWN THEREON ARE THE CONFIDENTIAL PROPERTY OF, AND ARE PROPRIETARY TO, WANG LABORATORIES, INC.. THIS DRAWING AND THE DATA SHOWN THEREON MAY NOT BE MADE PUBLIC WITHOUT THE WRITTEN CONSENT OF WANG LABORATORIES, INC. IF FOR ANY REASON THIS DRAWING IS PERMITTED BY WANG TO LEAVE THE PHYSICAL CUSTODY OF THE COMPANY, IT IS RETURNABLE UPON THE DEMAND OF WANG LABORATORIES, INC."

DO NOT SCALE

CONN. 4

$\overline{RD_0}$	A 1	MDMARS
DBICO	B 2	$DBID_6$
$\overline{DBOLW}$	C 3	
$\overline{LG_0}$	D 4	$\overline{LG_1}$
$\overline{LG_7}$	E 5	$\overline{LG_3}$
$\overline{LG_6}$	F 6	$\overline{LG_2}$
$\overline{LG_5}$	H 7	$\overline{LG_4}$
	J 8	$\overline{SLD}$
ϕC	K 9	$DBID_0$
	L 10	$DBID_5$
$DBID_4$	M 11	$DBID_3$
$DBID_2$	N 12	$DBID_1$
MMWRS	P 13	SS_0
	R 14	SS_1
$\overline{SCLT00}$	S 15	SS_2
DLNB	T 16	$\overline{WAIT}$
	U 17	$\overline{MR}$
$\overline{WTMME}$	V 18	$DBID_7$
$\overline{RFMME}$	W 19	
	X 20	
+5VR	Y 21	+5VR
±0V	Z 22	±0V

CONN. 2

±0V	A 1	±0V
+5VR	B 2	+5VR
D_7	C 3	D_0
D_6	D 4	D_1
D_5	E 5	D_2
D_4	F 6	D_3
	H 7	
$\overline{CBUSRQ}$	J 8	$\overline{TXT}$
$DBOD_6$	K 9	$DBOD_7$
$DBOD_5$	L 10	$DBOD_4$
$DBOD_2$	M 11	$DBOD_3$
$DBOD_0$	N 12	$DBOD_1$
$\overline{DMAMREQ}$	P 13	BUSAK
	R 14	
	S 15	

CONN 1

±0V	A 1	±0V
	B 2	
	C 3	
$\overline{INRDY}$	D 4	ICLK
$\overline{OUTRDY}$	E 5	DLMM/$\overline{IO}$
	F 6	
PAR OUT	H 7	PAR IN
$\overline{INSTRB}$	J 8	
$\overline{DBICC}$	K 9	
$\overline{DBOCC}$	L 10	
$\overline{NXTOUT}$	M 11	
$\overline{ST\ DATA}$	N 12	
A_0	P 13	A_1
A_2	R 14	A_3
A_4	S 15	A_5
A_6	T 16	A_7
A_8	U 17	A_9
A_{10}	V 18	A_{11}
A_{12}	W 19	A_{13}
A_{14}	X 20	A_{15}
DBOPB	Y 21	$\overline{STXD}$
DBIPB	Z 22	

SIGNAL - TERMINAL DESIGNATIONS, VIEW FROM BOTTOM (WIRING) SIDE OF CONNECTOR

I.C. TYPE	LOC.	SPARES
74LS00	L34	1
	L63	1
7402	L72	1
74LS02	L9	1
	L19	1
	L121	1
74LS04	L73	3
74LS08	L12	1
	L64	1
74S10	L53	2
74S11	L87	1
74S20	L80	1
7427	L2	2
74LS32	L59	1
74S37	L7	2
74LS14	L89	1
7476	L46	1
74123	L90	1
74125	L52	1

COMPONENT	WANG PART NO.	TYPE
R96	330-2048	470Ω 1/4W 5%
R1-10, 12, 14, 17-34, 37, 38	330-3023	2.2K 1/4W 5%
R11	330-4028	27K 1/4W 5%
R15	330-3052	5.1K 1/4W 5%
R16, 39, 40, 41, 43	330-4011	10K 1/4W 5%
R35, 36, 47	330-2034	330Ω 1/4W 5%
R93, 44	330-2023	220Ω 1/4W 5%
R42	330-1023	22Ω 1/4W 5%
R45	330-2016	150Ω 1/4W 5%
C3-78, 84, 87, 94	300-1966	.047μF 50V 20% CER
C79-82, 88, 89	300-4022	15μF 20V (T)
CB3, 85, 91, 92	300-1220	220 pF 500V CER
C86	300-1082	82pF 500V 10% C
C1	300-1915	.0056μF 500V CER
C90	300-1930	.1μF 50V CER
C2	300-1150	150 pF 500V CER
D1	380-1001	SIL. D035
XTAL	321-0018	17.1 MHZ
C93	300-1022	22 pf

I.C. LOCATION	WL. PART No	TYPE
L1, 3, 4, 29, 31, 42, 43, 62, 66, 67, 89, 107, 127, 128	376-0155	74LS74
L2	376-0125	7427
L5, 11, 54, 90	376-0080	74123
L6	376-0198	74S30
L7	376-0296	74S37
L8, 20, 21, 26, 27, 32, 37, 50, 55, 68, 70	376-0202	74S74
L9, 19, 41, 97, 124	376-0208	74LS02
L10, 36, 49, 65, 35	376-0304	74LS73
L12, 58, 61, 64	376-0153	74LS08
L13, 34, 40, 63	376-0207	74LS00
L14	376-0102	7416 4
L15, 22	376-0221	74S194
L16, 56	376-0228	74S00
L17	376-0045	74H04
L18	376-0184	74S51
L23, 75, 76, 93, 94	376-0109	74166
L24, 25, 69	376-0238	74S10
L28, 48, 52, 60	376-0324	74125
L30, 74, 86	376-0245	74LS27
L33	376-0271	74S86
L85	376-0010	7404
L38, 45, 51	376-0199	74S02
L39, 44	376-0200	74S08
L46	376-0007	7476
L108, 109		SPARE
L57	376-0205	74S32
L59	376-0211	74LS32
L71, 73	376-0180	74LS04
L72,	376-0016	7402
L77, 95, 96, 113, 119-122	376-0286	74LS374
L78, 79, 97, 98, 99, 101, 102, 109, 111, 112, 115	376-0288	74LS244
L80	376-0230	74S20
L81, 82, 83	376-0298	74S138
L84, 53	376-0209	74LS10
L87	376-0237	74S11
L88	376-0206	74S260
L91, 92, 125, 126	376-0233	74LS161
L100, 110	376-0297	74LS240
L103, 104	376-0098	7417 4
L105, 106	376-0082	74157
L116, 117, 118	376-0221	74S194
L123	376-0298	74S138
L114	376-0310	74LS373

MNEMONIC	COORDINATE
$A_0 - A_{15}$	3 E 1
BUSAK	1 B 11
$\overline{CBUSRQ}$	3 A 7
$D_0 - D_7$	6 A 5
$\overline{DBICC}$	1 A 5
DBICO	2 B 11
$DBID_0 - DBID_7$	5 G 1
DBIPB	5 F 1
$\overline{DBOCC}$	1 A 6
$DBOD_0 - DBOD_7$	5 G 5
$\overline{DBOLW}$	5 F 1
DBOPB	5 G 7
DLNB	3 A 9
DLMM/$\overline{IO}$	1 C 11
$\overline{DMAMREQ}$	3 B 1
ICLK	1 A 10
$\overline{INRDY}$	3 C 11
$\overline{INSTRB}$	3 C 1
$\overline{LG_0} - \overline{LG_7}$	6 E 1
MDMARS	3 A 5
MMWRS	3 A 5
$\overline{MR}$	1 B 11
$\overline{NXTOUT}$	2 G 1
$\overline{OUTRDY}$	3 G 7
PAR IN	1 B 11
PAR OUT	1 E 11
$\overline{RD_0}$	3 A 6
$\overline{RFMME}$	3 A 6
$\overline{SCLT00}$	1 G 5
$\overline{SLD}$	5 A 11
SS_0, SS_1, SS_2	6 F 1
$\overline{ST\ DATA}$	1 E 11
$\overline{STXD}$	4 B 1
$\overline{TXI}$	2 A 10
$\overline{WAIT}$	1 G 1
$\overline{WTMME}$	3 A 6
ϕC	1 E 11

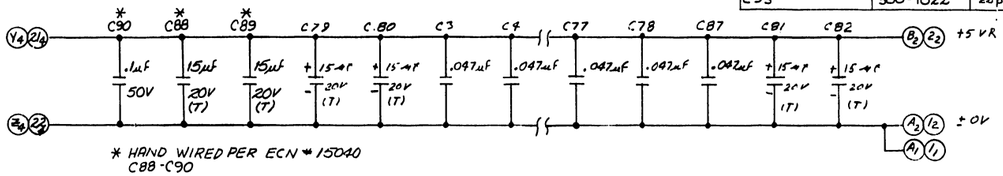

* HAND WIRED PER ECN # 15040
C88-C90

NOTE:
1. ALL RESISTORS ARE 1/4W 5% UNLESS OTHERWISE SPECIFIED.

E-KEY.
9

REV.	NO.	REVISION	BY	DATE
	10	ORG. PER UWR # E529 APP'D: [illegible]	[illegible]	9-19-79
	10	REVISED PER ECN # 12025 APP'D: [illegible]	[illegible]	9-19-77
	2/10	REVISED PER ECN # 12736 APP'D: [illegible]	[illegible]	11-8-79
	3/11	REVISED PER ECN # 13031 APP'D: [illegible]	[illegible]	12-10-79
	4/12	REVISED PER ECN # 13533 APP'D: [illegible]	[illegible]	2-16-80
	5/12	REVISED PER ECN # 13933 APP'D: [illegible]	[illegible]	2-16-80
	6/13	REVISED PER ECN # 13987 APP'D: [illegible]	[illegible]	2-16-80
	7/14	REVISED PER ECN # 13940 APP'D: [illegible]	[illegible]	5-6-80
	8/15	REVISED PER ECN # 13990 APP'D: [illegible]	[illegible]	5-6-80
	9/16	REVISED PER ECO # 18927 APP'D: [illegible]	JEP	6-24-81
	10/17	REVISED PER ECO # 20870 APP'D: [illegible]	JEP	11-3-81
	11/18	REVISED PER ECO # 21712 APP'D: [illegible]	PGD	6-4-82
	12/18	REVISED PER ECO # 22772 APP'D: [illegible]	PGD	5-6-82
	13/18	REVISED PER ECO # 22864 APP'D: [illegible]	PGD	5-6-82
	14/19	REVISED PER ECO # 23111 APP'D: [illegible]	JEP	5-18-82
	15/19	REVISED PER ECO # 23339 & 21765 F APP'D: [illegible]	EMO	2/4/83

WANG LABORATORIES, INC. LOWELL, MASS. U.S.A.	BY	DATE	APPROVED BY	DATE
MATERIAL	DWN JO	7-14-78	E ENGR A. DESEUR	10-15-79
MODEL NO. 140	CHK. [illegible]	10-15-79	M ENGR	
SEE ENGRG SPECIFICATIONS No.			MFG ENGR	
FINISH	TITLE DATA LINK CONTROL			
TOLERANCES AS NOTED .XX ± FRAC ± .XXX ± ANG ± FINISH	210-7503	D	[illegible]	15
SCALE: [illegible] OF 2	WANG PART NUMBER	SIZE	DRAWING NUMBER	REV

7503 D

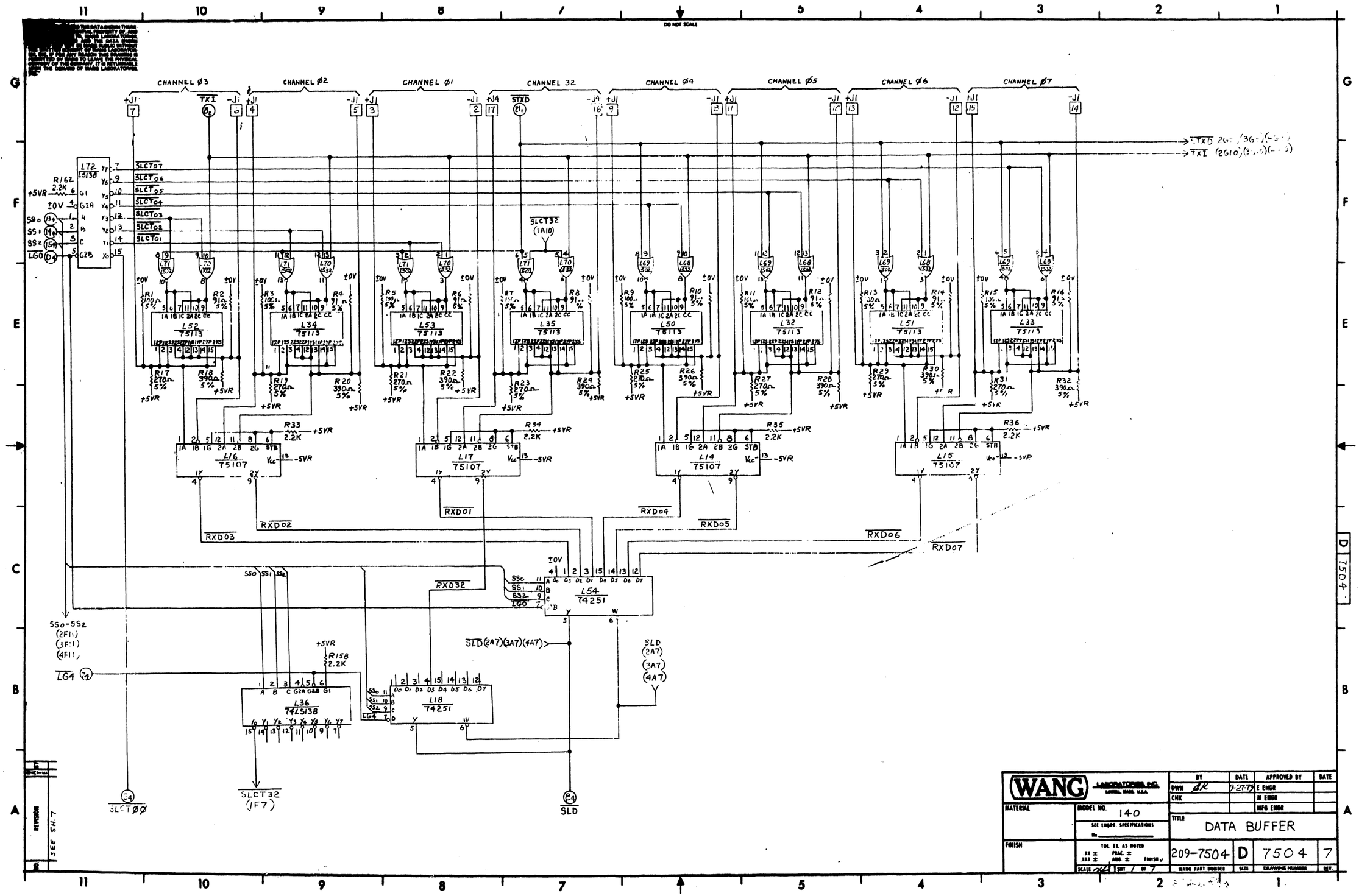

CHANNEL Ø3
CHANNEL Ø2
CHANNEL Ø1
CHANNEL 32
CHANNEL Ø4
CHANNEL Ø5
CHANNEL Ø6
CHANNEL Ø7
TXI
STXD
SLCT32 (1A10)
L52 75113
L53 75113
L35 75113
L50 75113
L32 75113
L51 75113
L33 75113
L16 75107
L17 75107
L14 75107
L15 75107
RXD01
RXD02
RXD03
RXD04
RXD05
RXD06
RXD07
RXD32
L54 74251
L36 74LS138
L18 74251
SLD (2A7)(3A7)(4A7)
SLD (2A7) (3A7) (4A7)
SLCT32 (1F7)
SLCTØØ
SLD
SS0-SS2 (2F11) (3F11) (4F11)
LG4
R158 2.2K
R162 2.2K
+5VR
±0V
-5VR
DO NOT SCALE
WANG LABORATORIES, INC.
MODEL NO. 140
SEE ENGRG. SPECIFICATIONS
TITLE DATA BUFFER
209-7504 D 7504 7
WANG PART NUMBER
SIZE
DRAWING NUMBER
REV.
SEE SH. 7

[redacted] THE DATA SHOWN THEREON IS PROPRIETARY PROPERTY OF AND CONFIDENTIAL TO [redacted], WANG LABORATORIES, INC. AND THE DATA SHOWN THEREON SHALL NOT BE DISCLOSED WITHOUT THE WRITTEN CONSENT OF WANG LABORATORIES, INC. IF FOR ANY REASON THIS DRAWING IS PERMITTED BY WANG TO LEAVE THE PHYSICAL CUSTODY OF THE COMPANY, IT IS RETURNABLE UPON THE DEMAND OF WANG LABORATORIES, INC.

DO NOT SCALE

CHANNEL 11 · CHANNEL 10 · CHANNEL 09 · CHANNEL 08 · CHANNEL 12 · CHANNEL 13 · CHANNEL 14 · CHANNEL 15

+5VR 2.2K ±0V R159

L84 LS138 — G1, G2A, G2B; Y0 SLCT 08, Y1 SLCT 09, Y2 SLCT 10, Y3 SLCT 11, Y4 SLCT 12, Y5 SLCT 13, Y6 SLCT 14, Y7 SLCT 15

SS0-SS2 (181)

STXD (161)

XT (1F1)

L67 (S02) · L66 (S32) · L65 (S04) · L64 (S34)

R37 10Ω 5% · R38 91Ω 5% · R39 10Ω 5% · R40 91Ω 5% · R41 100Ω 5% · R42 91Ω 5% · R43 5% · R44 91Ω 5% · R45 5% · R46 91Ω 5% · R47 5% · R48 91Ω 5% · R49 10Ω 5% · R50 5% · R51 5% · R52 5%

L48 / L49 / L30 / L31 / L46 / L28 / L47 / L29 — 75113

R53 270Ω 5% · R54 390Ω 5% · R55 270Ω 5% · R56 390Ω 5% · R57 270Ω 5% · R58 390Ω 5% · R59 270Ω 5% · R60 390Ω 5% · R61 270Ω 5% · R62 390Ω 5% · R63 270Ω 5% · R64 390Ω 5% · R65 270Ω 5% · R66 390Ω 5% · R67 270Ω 5% · R68 390Ω 5% — +5VR

R69 · R70 · R71 · R72 — 2.2K +5VR

L12 / L13 / L10 / L11 — 75107 — Vcc 13 -5VR

RXD11 · RXD10 · RXDØ9 · RXDØ8 · RXD12 · RXD13 · RXD14 · RXD15

L85 74251 — S0 11, S1 10, S2 9, EN 7; A D3, DZ D1, D0 D4, D5 D6, D7; 1 2 3 4 15 14 13 12; Y 5, W 6

LGI (44)

SLD (187) · SLD (186)

WANG LABORATORIES, INC. LOWELL, MASS. U.S.A.	BY	DATE	APPROVED BY	DATE
	DWN GR	7-27-79	E ENGR	
	CHK		M ENGR	
			MFG ENGR	
MATERIAL	MODEL NO. 140 — SEE ENGR. SPECIFICATIONS No.	TITLE DATA BUFFER		
FINISH	TOL. EE. AS NOTED .XX ± .XXX ± FRAC. ± ANG. ± FINISH √	209-7504	D	7504	7
	SCALE NR SHT 2 OF 7	MAINT. PART NUMBER	SIZE	DRAWING NUMBER	REV.

D-7504

REVISIONS

...ED THIS DATA SHEET THERE-... PROPERTY OF, AND ...S, WANG LABORATORIES, ... AND THE DATA SHEET ... PUBLIC WITHOUT ... OF WANG LABORATORIES, ... OR IN ANY MANNER THIS DRAWING IS ... TO LEAVE THE PHYSICAL ... OF THE COMPANY, IT IS ENFORCEABLE ... THE BOARD OF WANG LABORATORIES, INC.

DO NOT SCALE

CHANNEL 19 | CHANNEL 18 | CHANNEL 17 | CHANNEL 16 | CHANNEL 20 | CHANNEL 21 | CHANNEL 22 | CHANNEL 23

R160 22K ±5V ±5R

SS0-SS2 (1B11)

L78 74S138

SLCT16 SLCT23 SLCT22 SLCT21 SLCT20 SLCT19 SLCT18 SLCT17

TXI (IF1)

STXD (1G1)

L63 74S02 | L62 74S32 | L61 74S02 | L60 74S32 | L67 74S02 | L66 74S32

R73 200Ω 5% | R74 91Ω 5% | R75 200Ω 5% | R76 91Ω 5% | R77 200Ω 5% | R78 91Ω 5% | R79 200Ω 5% | R80 91Ω 5% | R81 200Ω 5% | R82 91Ω 5% | R83 200Ω 5% | R84 91Ω 5% | R85 200Ω 5% | R86 91Ω 5% | R87 200Ω 5% | R88 91Ω 5%

L44 75113 | L26 75113 | L45 75113 | L27 75113 | L42 75113 | L24 75113 | L43 75113 | L25 75113

R89 270Ω 5% | R90 390Ω 5% | R91 270Ω 5% | R92 390Ω 5% | R93 270Ω 5% | R94 390Ω 5% | R95 270Ω 5% | R96 390Ω 5% | R97 270Ω 5% | R98 390Ω 5% | R99 270Ω 5% | R100 5.6K Ω 5% | R101 270Ω 5% | R102 390Ω 5% | R103 270Ω 5% | R104 390Ω 5%

+5VR

R105 2.2K | R106 2.2K | R107 2.2K | R108 2.2K

L6 75107 | L9 75107 | L6 75107 | L7 75107

Vcc -5VR

RXD17 | RXD16 | RXD20 | RXD21 | RXD18 | RXD19 | RXD22 | RXD23

L79 74251

SS0 SS1 SS2 LG2

SLD (1B7) | SLD (1B6)

REVISION

SEE SH. 7

WANG LABORATORIES INC. LOWELL, MASS. U.S.A.			
MATERIAL	MODEL NO. 140 SEE ENGRG SPECIFICATIONS	BY	DATE	APPROVED BY	DATE
		DWN BR 7-27-79		E ENGR	
		CHK		M ENGR	
				MFG ENGR	
FINISH	TOL. EX. AS NOTED .XX ± .XXX ± FRAC. ± ANG. ± FINISH √	TITLE DATA BUFFER			
	SCALE	SHT 3 OF 7	205-7504	D	7504	7
			MARK PART NUMBER	SIZE	DRAWING NUMBER	REV.

7504 D

"THIS DRAWING AND THE DATA SHOWN THEREON IS THE EXCLUSIVE PROPERTY OF, AND CONFIDENTIAL TO, WANG LABORATORIES, INC. AND THE DATA SHOWN THEREON MAY NOT BE MADE PUBLIC WITHOUT THE WRITTEN CONSENT OF WANG LABORATORIES, INC. IF FOR ANY REASON THIS DRAWING IS PERMITTED BY WANG TO LEAVE THE PHYSICAL CUSTODY OF THE COMPANY, IT IS RETURNABLE UPON THE DEMAND OF WANG LABORATORIES, INC."

DO NOT SCALE

CHANNEL 27 | CHANNEL 26 | CHANNEL 25 | CHANNEL 24 | CHANNEL 28 | CHANNEL 29 | CHANNEL 30 | CHANNEL 31

R161 510Ω +5VR

SSa-SSc (S5)

L55 LS138 — G1, G2A, G2B, A, B, C; Y0–Y7

SLCT 24 — SLCT 30 — SLCT 29 — SLCT 28 — SLCT 27 — SLCT 26 — SLCT 25

XI (IF1)

STXD (IG1)

L59 LS02 — L58 LS32 — L57 LS02 — L56 LS32

R109 910Ω 5% — R110 910Ω 5% — R111 910Ω 5% — R112 910Ω 5% — R113 910Ω 5% — R114 910Ω 5% — R115 910Ω 5% — R116 910Ω 5% — R117 910Ω 5% — R118 910Ω 5% — R119 910Ω 5% — R120 910Ω 5% — R121 910Ω 5% — R122 910Ω 5% — R123 910Ω 5% — R124 910Ω 5%

L40 74113 — L22 75113 — L41 75113 — L23 75113 — L38 75113 — L20 75113 — L39 75113 — L21 75113

R125 270Ω 5% — R126 390Ω 5% — R127 270Ω 5% — R128 390Ω 5% — R129 270Ω 5% — R130 390Ω 5% — R131 270Ω 5% — R132 390Ω 5% — R133 270Ω 5% — R134 390Ω 5% — R135 270Ω 5% — R136 390Ω 5% — R137 270Ω 5% — R138 390Ω 5% — R139 270Ω 5% — R140 390Ω 5% — +5VR

R141 2.2K — R142 2.2K — R143 2.2K — R144 2.2K — +5VR

L4 75107 — L5 75107 — L2 75107 — L3 75107 — Vcc 13 -5VR

RDX27 — RDX26 — RDX25 — RDX24 — RXD28 — RXD29 — RXD30 — RXD31

L37 74251 — SSc, SS1, SS2, LG3 — D3 D2 D1 D0 D4 D5 D6 D7 — Y 5 — W 6

LG3 (S4)

SLD (IB7) — SLD (IB6)

WANG LABORATORIES, INC. LOWELL, MASS. U.S.A.	BY	DATE	APPROVED BY	DATE
	DWN BR	7-27-79	E ENGR	
	CHK		M ENGR	
			MFG ENGR	
MATERIAL	MODEL NO. 140	TITLE DATA BUFFER		
	SEE ENGRG SPECIFICATIONS No.			
FINISH	TOL. ER. AS NOTED XX ± FRAC. ± XXX ± ANG. ± FINISH √	209-7504	D	7504 7
	SCALE	SHT 4 OF 7	WANG PART NUMBER	SIZE DRAWING NUMBER REV.

REVISION — BY — NO.

D 7504

"THIS DRAWING AND THE DATA SHOWN THEREON ARE THE CONFIDENTIAL PROPERTY OF, AND ARE PROPRIETARY TO, WANG LABORATORIES, INC.: THIS DRAWING AND THE DATA SHOWN THEREON MAY NOT BE MADE PUBLIC WITHOUT THE WRITTEN CONSENT OF WANG LABORATORIES, INC. IF FOR ANY REASON THIS DRAWING IS PERMITTED BY WANG TO LEAVE THE PHYSICAL CUSTODY OF THE COMPANY, IT IS RETURNABLE UPON THE DEMAND OF WANG LABORATORIES, INC."

DO NOT SCALE

CLK
INSTRQST
INREQ
IOV
BK1 (5E6)
NXTOUT
DBORS
BMR1
MR
RDCYL (5E7)
DBOCC
DBICC
OUTRDY
DBOLW
DBOCO
DBICO
DBADRS
DBA0
DBA1
DBA2
DBA3
DBA4
DBA5
DBA6
DBA7
DBRW
BK3(5D10)
BK1 (5E10)
RDCYL (5D11)
INREQ (5D8)
INREQ (5F10)
BK3(5F7)
BK2 (5E2)
RFMME
PARIN
MDMARS
MMWRS
Do-D7 (5B1)
INRDY
DPIPB
PARDUT
WTMMF
DBOPB
Do-D7 (5G3)
BK2(5G4)
DBOD0
DBOD1
DBOD2
DBOD3
DBOD4
DBOD5
DBOD6
DBOD7
DBID0
DBID1
DBID2
DBID3
DBID4
DBID5
DBID6
DBID7
D0
D1
D2
D3
D4
D5
D6
D7
+5VR
+10V
+5V
L75 504
L76 S74
L91 04
L77 LS11
L94 S00
L92 LS74
L73 S74
L93 S174
L95 S51
L102 LS374
L101 LS374
L104 LS74
L103 125
L86 S04
L88 LS161
L89 LS161
L87 157
L107 LS161
L106 LS161
L105 157
L99 2101A-2
L100 2102A-2
L98 LS374
L97 LS374
L96 S74
R145 1K
R146 2.2K
R147 1K
R148 2.2K
R149 2.2K
R150 2.2K
R151 2.2K
R152 2.2K
R153 2.2K
R154 2.2K
R155 1K
R156 1K
R157 2.2K

WANG LABORATORIES, INC. LOWELL, MASS. U.S.A.	BY	DATE	APPROVED BY	DATE
	DWN GR	9-27-79	E ENGR	
	CHK		M ENGR	
			MFG ENGR	
MATERIAL	MODEL NO.	TITLE		
	SEE ENGRG. SPECIFICATIONS No.	DATA BUFFER		
FINISH	TOL. EX AS NOTED .XX ± FRAC ± .XXX ± ANG ± FINISH √	209-7504	D	7504	7
	SCALE NONE SHT 5 OF 7	WANG PART NUMBER	SIZE	DRAWING NUMBER	REV.

D 7504

"THIS DRAWING AND THE DATA SHOWN THEREON ARE THE CONFIDENTIAL PROPERTY OF, AND ARE PROPRIETARY TO, WANG LABORATORIES, INC.; THIS DRAWING AND THE DATA SHOWN THEREON MAY NOT BE MADE PUBLIC WITHOUT THE WRITTEN CONSENT OF WANG LABORATORIES, INC. IF FOR ANY REASON THIS DRAWING IS PERMITTED BY WANG TO LEAVE THE PHYSICAL CUSTODY OF THE COMPANY, IT IS RETURNABLE UPON THE DEMAND OF WANG LABORATORIES, INC."

DO NOT SCALE

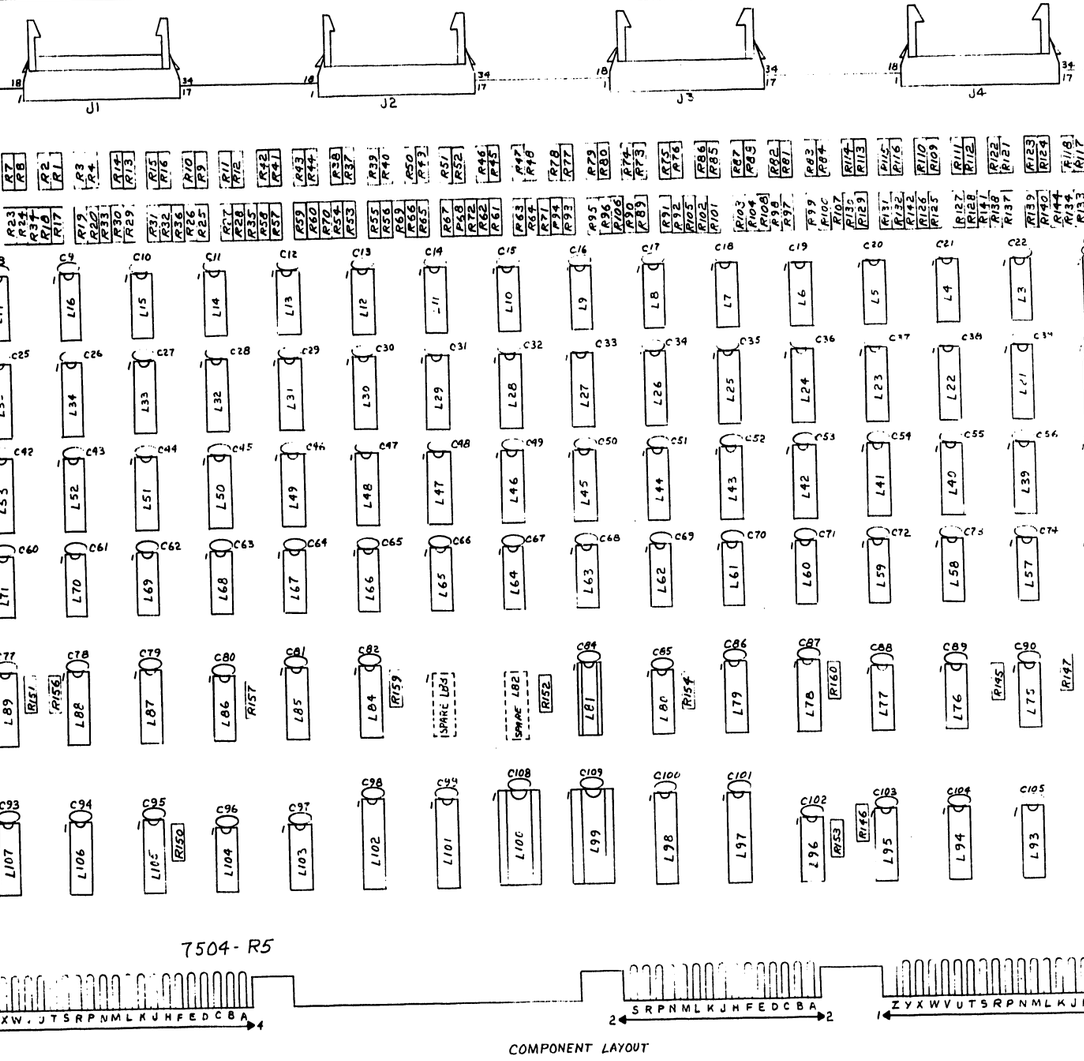

COMPONENT LAYOUT

REVISION	BY	DATE
NO.		

WANG LABORATORIES, INC. LOWELL, MASS. U.S.A.	BY	DATE	APPROVED BY	DATE
	DWN AR	4-27-77	E ENGR	
	CHK		M ENGR	
			MFG ENGR	
MATERIAL	MODEL NO. 140	TITLE DATA BUFFER		
	SEE ENGRG SPECIFICATIONS No.			
FINISH	TOL XX AS NOTED .XX ± FRAC ± .XXX ± ANG ± FINISH √	209-7504	D	7504	7
	SCALE NONE SHT 6 OF 7	WANG PART NUMBER	SIZE	DRAWING NUMBER	REV

D 7504

"THIS DRAWING AND THE DATA SHOWN THEREON ARE THE CONFIDENTIAL PROPERTY OF, AND ARE PROPRIETARY TO, WANG LABORATORIES, INC. THIS DRAWING AND THE DATA SHOWN THEREON MAY NOT BE MADE PUBLIC WITHOUT THE WRITTEN CONSENT OF WANG LABORATORIES, INC. IF FOR ANY REASON THIS DRAWING IS PERMITTED BY WANG TO LEAVE THE PHYSICAL CUSTODY OF THE COMPANY, IT IS RETURNABLE UPON THE DEMAND OF WANG LABORATORIES, INC."

DO NOT SCALE

COMPONENT	W.L. PART NO.	TYPE
R1,3,5,7,9,11,13,15,37,39,41,43,45,47,49,51,73,75,77,79,81,83,85,87,103,111,113,115,117,119,121,123	330-2011	100Ω 5% 1/4W
R2,4,6,8,10,12,14,16,38,40,42,44,46,48,50,52,74,76,78,80,82 And R86,88,110,112,114,116,118,120,122,124	330-1092	91Ω 5% 1/4W
R17,19,21,23,25,27,29,31,53,55,57,59,61,63,65,67,89,91,93,95,97,99,101,103,125,127,129,131,133,135,137,139	330-2028	270Ω 5% 1/4W
R18,20,22,24,26,28,30,32,54,56,58,60,62,64,66,68,90,92,94,96,98,100,102,104,126,128,130,132,134,136,138,140	330-2040	390Ω 5% 1/4W
R33,34,35,36,69,70,71,72,105,106,107,108,141,142,143,144,146,148,149,150,151,152,153,154,157,158,159,160,161,162	330-3022	2.2K 10% 1/4W
R145,147,155,156		1K 10% 1/4W
C1-6	300-4022	15μF 20V(T)
C7-82,84-90,92-107	300-1900	.05μF 12V
C108,109	300-1930	.1μF 50V
J1,2,3,4	350-0429	34 PIN
L81	376-9002	16 PIN SKT
L99,100	376-9010	22 PIN SKT

LOCATION	W.L. PART NO.	TYPE
L2-17	376-0146	75107
L18,37,54,79,85	376-0272	74251
L20-35,38-53	376-0256	75113
L36,55,72,78,84	376-0294	74LS138
L56,58,60,62,64,66,68,70	376-0211	74LS32
L57,59,61,63,65,67,69,71	376-0208	74LS02
L73,76,96	376-0202	74S74
L86	376-0197	74S04
L77	376-0225	74LS11
L81	377-0363	2102A-2
L87,105	376-0082	74157
L88,89,106,107	376-0233	74LS161
L91	376-0010	7404
L92,104,80	376-0155	74LS74
L93	376-0247	74S174
L94	376-0228	74S00
L95	376-0184	74S51
L97,98,101,102	376-0286	74LS374
L99,100	377-0367	2101A-2
L103	376-0324	74125
L75	376-0045	74H04
L1,19,74,82,83,90	SPARES	

LOCATION	TYPE	SPARES
L75	74H04	1
L86	74S04	4
L91	7404	2
L94	74S00	3

MNEMONIC	COORDINATE
D_0-D_7	5B2
$\overline{DBICC}$	5C11
DBICO	5A7
$DBID_0$-$DBID_7$	5E1
$\overline{DBOCC}$	5C11
DBOCC	5A8
$DBOD_0$-$DBOD_7$	5A5
$\overline{DBOLW}$	5A9
DBOPB	5A3
DPIPB	5F1
ICLK	5G11
$\overline{INRDY}$	5F1
$\overline{INSTRB}$	5F11
$\overline{LG0}$	1F11
$\overline{LG1}$	2C11
$\overline{LG2}$	3C11
$\overline{LG3}$	4C11
$\overline{LG4}$	1E11
MMWRS	5G1
MDMARS	5G3
$\overline{MR}$	5D11
$\overline{NXTOUT}$	5E11
$\overline{OUTRDY}$	5A10
PARIN	5G4
PAROUT	5C1
$\overline{RFMME}$	5G4
$\overline{SLCT\phi\phi}$	1A11
$\overline{SLCT32}$	1A10
$\overline{SLD}$	1A7
SS0-SS2	1F11
$\overline{STXD}$	1G7
$\overline{TXI}$	1G10
$\overline{WTMME}$	5C1
CHAN. 1-7, 32	1G3-10
CHAN. 8-15	2G3-10
CHAN. 16-23	3G3-10
CHAN. 24-31	4G3-10

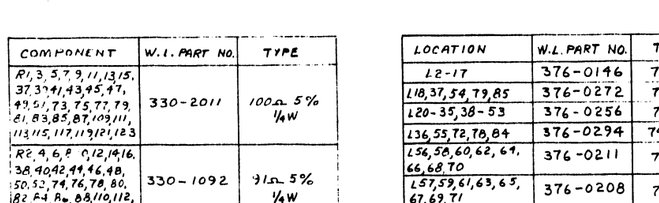

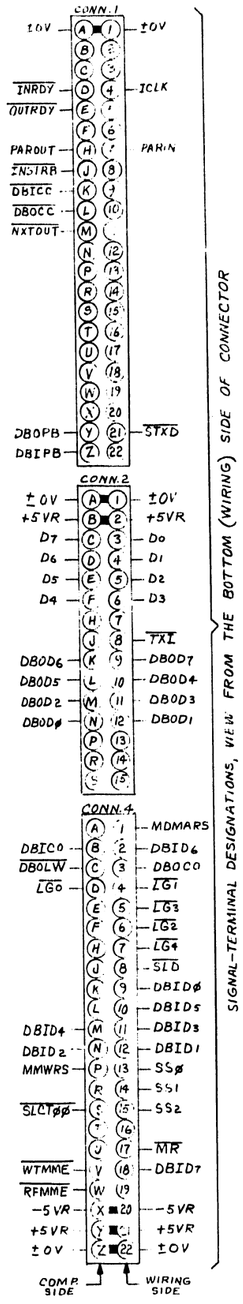

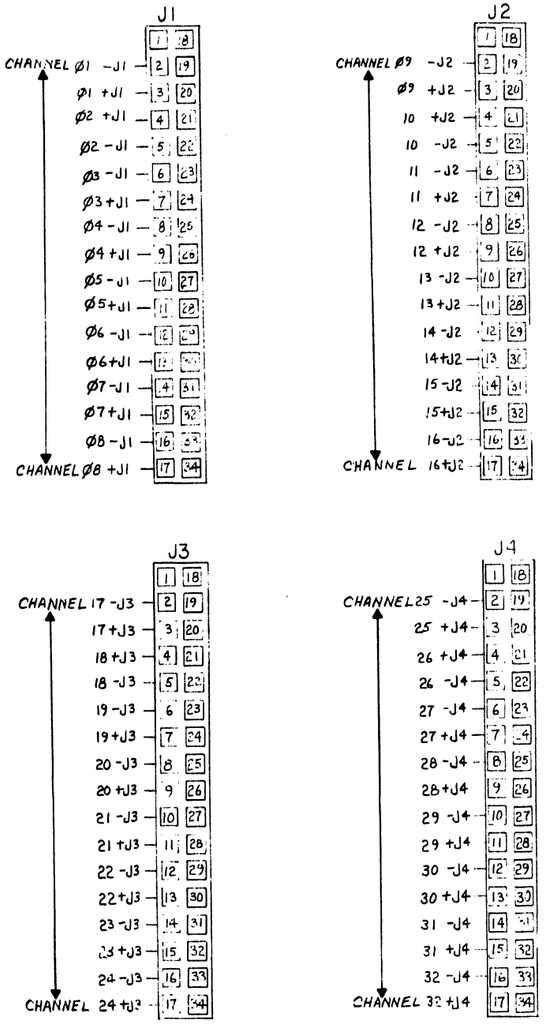

NO.	REVISION	BY	DATE
0	ORIGINATED PER DWR# E628 APP'D SAH 10-15-79	LN	9/24/79
1/6	REVISED PER ECN# 1714 APP'D SAH 10-15-79	LN	9/24/79
2/6	REVISED PER ECN# 12138 APP'D SAH 10-15-79	LN	9/24/79
3/6	REVISED PER ECN# 1337 APP'D SAH 10-15-79	LN	9/24/79
4/6	REVISED PER ECN# 1427 APP'D SAH 11-16-79	LN	11-27-79
5/6	REVISED PER ECN# 1327 APP'D SAH 11-28-79	LN	11-28-79
6/6	REVISED PER ECN# 1903 APP'D SAH 2-4-80	LN	2-4-80
7/6	REVISED PER ECN# 2391 APP'D SAH 2-26-80	LN	2-25-80

E-REV 0

WANG LABORATORIES, INC. LOWELL, MASS. U.S.A.	BY	DATE	APPROVED BY	DATE
	DWN [illegible]	9-27-79	E ENGR A. DES KUR	10-15-79
	CHK F.I.F.	10-15-79	M ENGR	
			MFG ENGR	
MATERIAL	MODEL NO. 140		TITLE DATA BUFFER	
	SEE ENGRG SPECIFICATIONS No.			
FINISH	TOL ER. AS NOTED .XX ± FRAC ± .XXX ± ANG ± FINISH √		209-7504	D 7504 7
	SCALE NONE	SHT 7 OF 7	WANG PART NUMBER	SIZE DRAWING NUMBER REV

D 7504

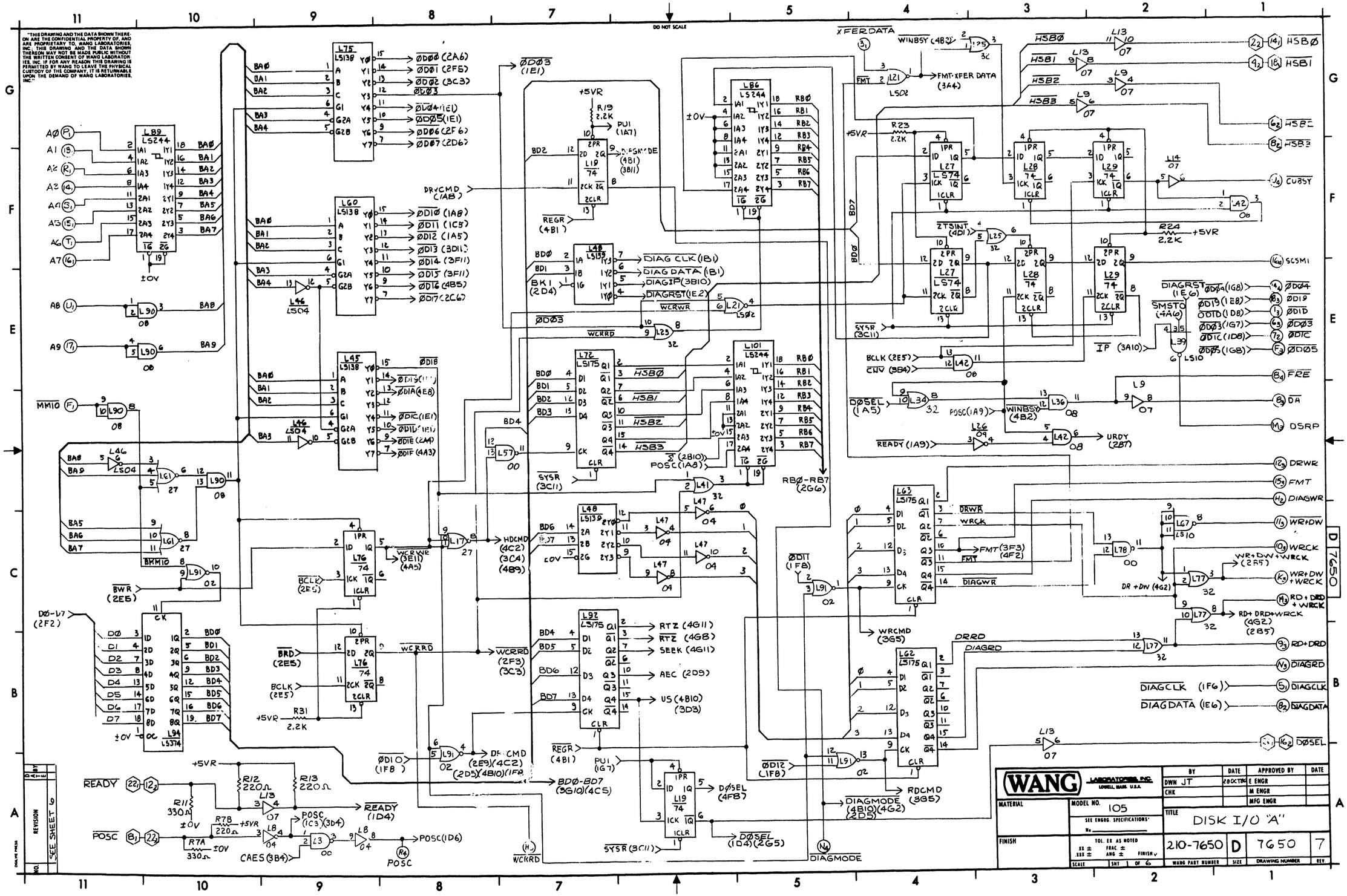
"THIS DRAWING AND THE DATA SHOWN THEREON ARE THE CONFIDENTIAL PROPERTY OF, AND ARE PROPRIETARY TO, WANG LABORATORIES, INC.; THIS DRAWING AND THE DATA SHOWN THEREON MAY NOT BE MADE PUBLIC WITHOUT THE WRITTEN CONSENT OF WANG LABORATORIES, INC. IF FOR ANY REASON THIS DRAWING IS PERMITTED BY WANG TO LEAVE THE PHYSICAL CUSTODY OF THE COMPANY, IT IS RETURNABLE UPON THE DEMAND OF WANG LABORATORIES, INC."
DO NOT SCALE
WANG LABORATORIES, INC. LOWELL, MASS. U.S.A.
MODEL NO. 105
SEE ENGRG. SPECIFICATIONS
TITLE DISK I/O "A"
210-7650
D
7650
7
WANG PART NUMBER
SIZE
DRAWING NUMBER
REV.
SHT 1 OF 6
SEE SHEET 6
REVISION
NO.
D 7650

"THIS DRAWING AND THE DATA SHOWN THEREON ARE THE CONFIDENTIAL PROPERTY OF, AND ARE PROPRIETARY TO, WANG LABORATORIES, INC. THIS DRAWING AND THE DATA SHOWN THEREON MAY NOT BE MADE PUBLIC WITHOUT THE WRITTEN CONSENT OF WANG LABORATORIES, INC. IF FOR ANY REASON THIS DRAWING IS PERMITTED BY WANG TO LEAVE THE PHYSICAL CUSTODY OF THE COMPANY, IT IS RETURNABLE UPON THE DEMAND OF WANG LABORATORIES, INC."

DO NOT SCALE

NOTES:
1) ETCH CUTS / JUMPERS HAND WIRED FOR R2 BOARDS ONLY PER ECO # 18867
2) THE FOLLOWING IC'S ARE STRAIGHT TTL FOR R1 BOARDS ONLY, L16, L27, L30, L55, L56, L69, L70, L71, L72. FOR R2 BOARDS AND UP THEY ARE LS TYPE.

WANG LABORATORIES, INC. LOWELL, MASS. U.S.A.		BY	DATE	APPROVED BY	DATE
		DWN JG	9/26/80	E ENGR	
		CHK		M ENGR	
MATERIAL	MODEL NO. 105			MFG ENGR	
	SEE ENGRG SPECIFICATIONS No.	TITLE	DISK I/O "A"		
FINISH	TOL. XX AS NOTED .XX ± FRAC ± .XXX ± ANG ± FINISH √	210-7650	D	7650	7
	SCALE	SHT 1 OF 3	WANG PART NUMBER	SIZE	DRAWING NUMBER	REV

D 7650

"THIS DRAWING AND THE DATA SHOWN THEREON ARE THE CONFIDENTIAL PROPERTY OF, AND ARE PROPRIETARY TO, WANG LABORATORIES, INC. THIS DRAWING AND THE DATA SHOWN THEREON MAY NOT BE MADE PUBLIC WITHOUT THE WRITTEN CONSENT OF WANG LABORATORIES, INC., IF FOR ANY REASON THIS DRAWING IS PERMITTED BY WANG TO LEAVE THE PHYSICAL CUSTODY OF THE COMPANY, IT IS RETURNABLE UPON THE DEMAND OF WANG LABORATORIES, INC."

DO NOT SCALE

FRCP (12)

RDCMD (1A4)

WRCMD (1B4)

L46 L504 L9 07 L47 04 L9 07 L34 32 L35 00

K1 DBICC

L1 DBOCC

V3 WROP

WROP (4C2)

BD0-BD7 (1A7)

HDRCLK A4

ØDI5 (1E8)

ØDI4 (1E8)

WCRWR (1C8)

HDRDATA S3

ØDI3 (1F8)

BWR (2E5)

L43 L40 L41 L39 LS10 L57 00

SH/LD LS195 L71 L70 L55 L69 L54 L56

SC0 SC1 SC2 SC3 SC4 SC5 SC6 SC7 SC8 SC9 SC10 SC11 SC12 SC13 SC14 SC15 SC16 SC17 SC18 SC19 SC20 SC21 SC22 HDROUT

L68 174 HBD0 HBD1 HBD2 HBD3 HBD4 HBD5

BD0 BD1 BD2 BD3 BD4 BD5 BD7

FMT (1C3)

L85 L84 L83 L97 LS244 RB0 RB1 RB2 RB3 RB4 RB5 RB6 RB7

L82 L23 LD 193 DN UP SCB0 SCB1 SCB2 SCB3 SCB4

±0V

POSC (1A3)

HMOP (4D8)

US (1B6)

HDCMD (1C7)

L35 L17 27

PU3 (4E1)

2PR L22 74

CNV (1E4)

*CUT ETCH

CAES (1A9)

WCRRD (1B7) ØDØ2 (1G8)

L6 32

LS266 L38 L53 L42 08

SCB0 SCB1 SCB2 SCB3 SCB4 HBD0 HBD1 HBD2 HBD3 HBD4 HBD5

SOP (4B1)

SAC (2B5)

R29 1.5K +5VR

SYSR (2L)

SYSR (1A6)(1D7)(1E4)(2C11)(3B4)(4E8)(4B2)

+5VR

R9 220Ω R10 (1E6) 220Ω DIAGIP

IP (10) (20)

R8 330Ω ±0V

DIAGMODE (1F8)

L13 07 L9 07 L6 32

L26 04 JP IP (4F2)

IP (1E2)

R22 2.2K

1PR L24 74

2PR L24 74

SYSR (3C1)

*JMPR L57 OC

L36 08 L25 32

FMT. XFER DATA (1G4)

FF (9)

CNV/SYSR (14)

HAND WIRED PER ECO 18964

R50-R87 (2G6)

FREEZEOFF (10)

DTR (J4)

HDROUT (J3)

IP (13)

SEE SHEET 6

REVISION

WANG LABORATORIES, INC. LOWELL, MASS. U.S.A.		BY	DATE	APPROVED BY	DATE
		DWN RD	10/26/80	E ENGR	
		CHK		M ENGR	
MATERIAL	MODEL NO. 105			MFG ENGR	
	SEE ENGRG. SPECIFICATIONS No.	TITLE	DISK I/O "A"		
FINISH	TOL EX. AS NOTED XX ± FRAC ± XXX ± ANG. ± FINISH √	210-7650	D	7650	7
	SCALE	SHT 3 OF 7	WANG PART NUMBER	SIZE	DRAWING NUMBER	REV

"THIS DRAWING AND THE DATA SHOWN THEREON ARE THE CONFIDENTIAL PROPERTY OF, AND ARE PROPRIETARY TO, WANG LABORATORIES, INC. THIS DRAWING AND THE DATA SHOWN THEREON MAY NOT BE MADE PUBLIC WITHOUT THE WRITTEN CONSENT OF WANG LABORATORIES, INC. IF FOR ANY REASON THIS DRAWING IS PERMITTED BY WANG TO LEAVE THE PHYSICAL CUSTODY OF THE COMPANY, IT IS RETURNABLE UPON THE DEMAND OF WANG LABORATORIES, INC."

DO NOT SCALE

SA10000(24) → L26 04 → PC7 → L12 38 → PRECMP (2B5)

RTZ (1C6) · BCLK (2E5) · SEEK (1B6) · L21 LS02 · L33 1A · LS393 1CLR · Ø1 · Ø3 (4E2) · L78 00 · TOV · 1PR L91 LS74 1CLR · RTZ (1B6) · DOSEL (1A6) · L35 00 · L33 2A · LS393 2CLR · Ø4 · HMOP · L47 04 · LDP

L32 1A · LS393 1CLR · Ø8 · L32 2A · LS393 2CLR · Ø12 · Ø14 · L35 00 · L36 08 · 2PR L81 LS74 2CLR · L77 32 · L78 00 · +5VR R32 2.2K · STEP

L50 OC · PC0–PC7 · LS374 CK · SB0–SB7 R36–R39 10K · +5VR · SB0-SB7 (2D7)

HMOP · L51 04 · BMR (2E5) · ØDIA (1D8) · L49 51 · TPKØØ (2A7) · HMOP (3D4) (2B5) · SYSR (3C11) · LDB 09 · L51 04

STPDIR (4E3) · Ø5 · L67 LS10 · L66 LS00 · LS04 · CNTEQ (4F2) · L51 04 · L66 LS00 · L78 00 · LS00 L66

L65 DN UP · SB0–SB3 · PC0–PC3 · LD LS193 · CLR · BOR CAR

L64 DN UP · SB4–SB7 · PC4–PC7 · LD LS193 · CLR · BOR CAR · ±0V

RTZ · BD0-BD7 (1A7) · LS30 · L51 04 → SKER (2F5) · L93 CLR CK · CB0–CB7

L80 LS85 · PC0–PC3 · CB0–CB3 · ±0V · A>B A=B A<B

L79 LS85 · PC4–PC7 · CB4–CB7 · A>B → STPDIR (4A5) (4D7) · A=B → CNTEQ · A<B

LSOF · WRGATE · DONE · DIAGMODE (1A4) · WRGATE (4E3) · L3 · RD+DRD+WRCK (1C1) · L14 07 · DR+DW (1C2) · FMT (1C3) · IP (3B9) · L39 LS10 · L16 LS00

HDRECCE (2G5) · HCE (2G4) · L34 32 · L16 LS00 · +5VR · CNTEQ (2A5) (4C7) · R21 2.2K · 1PR L37 LS74 1CLR · Ø3 (4F10) · 3KFIN · 2PR L37 LS74 2CLR · PU3 (4B6) (3C4) · WINBSY (2A7) · ETSINT (1F4) · WINBSY

ECCCC (2B7) · U5 30 · WRDP(3G1) · HDCMD(1C7) · DRVCMD (1A5) · L61 27 · SBP (4B11)

PU2 (2D4) · 2PR · SCP (3D2) · +5VR · R20 2.2K · 2PR L20 74 · BCLK (2E5) · L16 LS00 · DIAGMODE (1F6) · REGR (1B7)(1F7) · EBR (2B5)(4A6)

BMR (2E5) · ØDIF (1D8)

HDCMD (1C7) · U5 (1B6) · DRVCMD (1A8) · L36 08 · L21 LS02 · SBP (4C1) · DIAGMODE (1A4) · +5VR · R27 560K · R26 2.7K · TRIG1 RST1 THRSD1 DIS1 OUT1 CV1 L31 556 · C35 1.2uf 35V(T) · C51 .01uf · C5 .01uf · C49 .01uf · ±0V · L3 · L46 LS04

PU3 (4E1) · 1PR · L30 LS74 · L22 74 · TOE (2B6) · ØDIG (1E8) · WCRWR (1C8) · L59 02 · EBR (4A1)

SMSTO (1E2) · STEP · STPDIR (4E3) · L14 07 · STPDIR

WANG LABORATORIES, INC. LOWELL, MASS. U.S.A.		BY	DATE	APPROVED BY	DATE
MATERIAL	MODEL NO. 105	DWN RD	10/23/80	E ENGR	
	SEE ENGRG. SPECIFICATIONS No.	CHK		M ENGR	
FINISH	TOL. EX. AS NOTED XX ± FRAC. ± XXX ± ANG. ± FINISH √			MFG ENGR	
	SCALE	SHT 4 OF 6	TITLE: DISK I/O "A"		
	WANG PART NUMBER: 210-7650	SIZE: D	DRAWING NUMBER: 7650	REV: 7	

REVISION NO. · SEE SHEET 6

"THIS DRAWING AND THE DATA SHOWN THEREON ARE THE CONFIDENTIAL PROPERTY OF, AND ARE PROPRIETARY TO, WANG LABORATORIES, INC. THIS DRAWING AND THE DATA SHOWN THEREON MAY NOT BE MADE PUBLIC WITHOUT THE WRITTEN CONSENT OF WANG LABORATORIES, INC. IF FOR ANY REASON THIS DRAWING IS PERMITTED BY WANG TO LEAVE THE PHYSICAL CUSTODY OF THE COMPANY, IT IS RETURNABLE UPON THE DEMAND OF WANG LABORATORIES, INC."

DO NOT SCALE

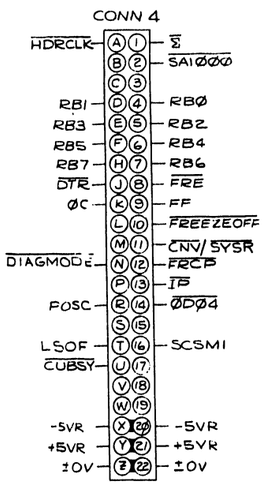

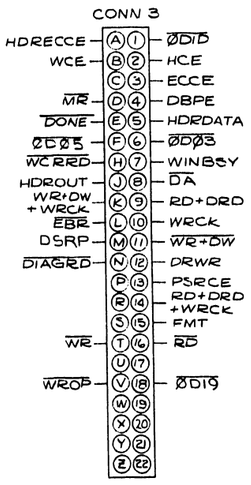

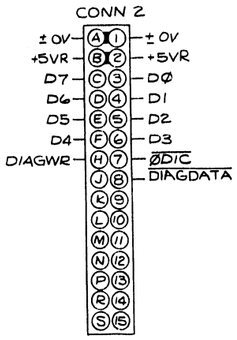

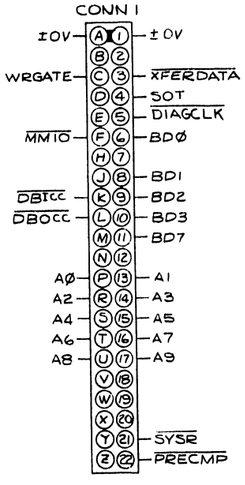

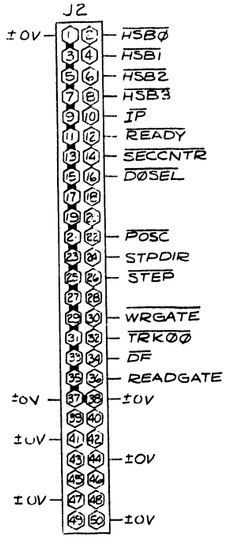

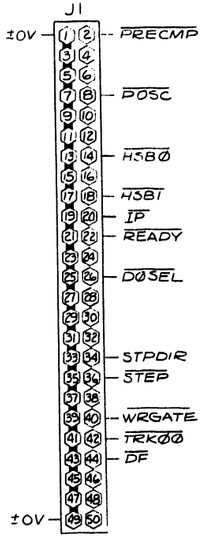

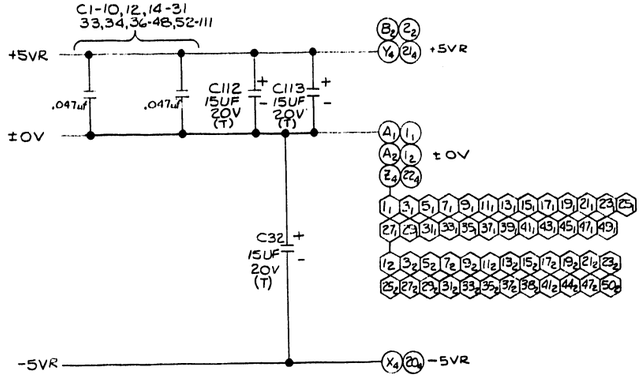

MNEMONICS	
HDROUT	3A7
HSBØ-HSB3	1G1
IP	3B1
IP	3A6
LSOF	4G3
MM10	1D11
MR	2G7
ØDØ3	1E1
ØDØ4	1E1
ØDIC	1E1
ØDID	1E1
ØDI9	1E1
ØDØ5	1E1
POSC	1AB
POSC	1A11
PRECMP	2B1
PSRCE	2A9
RBØ-RB7	3B1
RD	2G7
RD+DRD	1B1
RD+DRD+WRCK	1C1
READGATE	2B1
READY	1A11
SAIØØØ	4G10
SCSMI	1E1
SECCNTR	2G2
SOT	3D1
STEP	4A6
STPDIR	4A4
SYSR	3C11
TRKØØ	2A11
WCE	2G5
WCRRD	1A8
WINBSY	4D1
WR	2G7
WR+DW	1C1
WR+DW+WRCK	1C1
WRCK	1C1
WRGATE	4G2
WROP	3G1
WRGATE	4E1
XFERDATA	1G4
Σ	2B11
ØC	2G7

MNEMONICS	
A0-A9	1F11
BD0-BD7	3F1
CUBSY	1F1
CNV	3A4
DØ-D7	2F1
DA	1D1
DBICC	3G1
DBOCC	3G1
DBPE	2G5
DF	2G8
DIAGRD	1B1
DIAGWR	1D1
DONE	4G2
DIAGCLK	1B1
DIAGDATA	1B1
DIAGMODE	1A5
DØSEL	1B1

MNEMONICS	
DRWR	1D1
DSRP	1D1
DTR	3A11
EBR	4B1
ECCE	2G5
FF	3A3
FMT	1D1
FRCP	3G11
FRE	1E1
FREEZEOFF	3A11
FRCP	3G5
HCE	2G5
HDRCLK	3F11
HDRDATA	3E11
HDRECCE	2G5

IC LOCATION	W.L. PT.NO	TYPE
L1,2,5		SPARE
L6,25,34,41,77	376-0093	7432
L7,19,20,22,24,28,29,76	376-0006	7474
L8,24,47,51	376-0010	7404
L9,13,14	376-0056	7407
L10	376-0255	75110
L11	376-0146	75107
L12	376-0128	7438
L15,52	376-0031	7430
L3,35,43,57,78	376-0002	7400
L17,61	376-0125	7427
L21	376-0208	74LS02
L23,82	376-0053	74193
L46	376-0180	74LS04
L31	376-0341	NE556
L32,33	376-0307	74LS393
L16,66	376-0207	74LS00
L4	376-0080	74123
L27,30,37,44,74,81	376-0155	74LS74
L38,53	376-0148	74LS266
L39	373-0209	74LS10
L40,91,59	376-0016	7402
L42,90,18,36	376-0081	7408
L45,60,75	376-0294	74LS138
L48	376-0226	74LS139
L49	376-0012	7451
L50,94	376-0286	74LS374
L54	376-0097	74195
L58	376-0210	74LS20
L62,63,72,92	376-0160	74LS175
L64,65	376-0220	74LS193
L68	376-0098	74174
L55,56,69-71	376-0248	74LS195
L73,87,88,74A	376-0233	74LS161
L[illegible]	376-0209	74LS10
L79	376-0218	74LS85
L83-86,89,[illegible]-103	376-0288	74LS244
L93	376-0302	74L[illegible]
L80	376-0212	74LS35

COMPONENT	W.L. PART NO.	TYPE
RIA	330-3047	4.7K 1/4W 10%
R1,19-25,28,30-32,41	330-3022	2.2 K 1/4W 10%
R2,9,10,12-14,16,17,78	330-2022	220Ω 1/4W 10%
R3,8,11,15,18,7A	330-2033	330Ω 1/4W 10%
R4-7	330-1056	56Ω 1/4W 10%
R26	330-3027	2.7K 1/4W 10%
R27	330-5056	560K 1/4W 10%
R29	330-3015	1.5K 1/4W 10%
R33-40	330-4010	10K 1/4W 10%
C1-31,33,34,36-48,52-111	300-1962	.047µf 50V
C32,112,113	300-4022	15µf 20V (T)
C35	300-4013	1.2µf 35V (T)
C49-51	300-1903	.01µf 25V
C4A	300-1944	100PF 100V

IC TYPE	LOC	SPARES
7404	L8	2
7427	L17	1
7432	L6	1
7438	L12	3
7474	L7	1
74[illegible]SC4	L46	1
74LS10	L67	1
74123	L4	1
7407	L14	1
7432	L34	1
74LS266	L38	1

E-REV 5

REVISION	BY	DATE
SEE SHEET 6		

WANG LABORATORIES, INC. LOWELL, MASS. U.S.A.

	BY	DATE	APPROVED BY	DATE
	DWN JT	10-09-80	E ENGR	
	CHK		M ENGR	
			MFG ENGR	

MATERIAL

MODEL NO. 105
SEE ENGRG SPECIFICATIONS
No.

FINISH

TOL EX. AS NOTED
XX ± FRAC ±
XXX ± ANG ± FINISH √

TITLE: DISK I/O "A"

SCALE	SHT 5 OF 6	210-7650	D	7650	7
		WANG PART NUMBER	SIZE	DRAWING NUMBER	REV

D 7650

"THIS DRAWING AND THE DATA SHOWN THEREON ARE THE CONFIDENTIAL PROPERTY OF AND ARE PROPRIETARY TO, WANG LABORATORIES, INC.. THIS DRAWING AND THE DATA SHOWN THEREON MAY NOT BE MADE PUBLIC WITHOUT THE WRITTEN CONSENT OF WANG LABORATORIES, INC. IF FOR ANY REASON THIS DRAWING IS PERMITTED BY WANG TO LEAVE THE PHYSICAL CUSTODY OF THE COMPANY, IT IS RETURNABLE UPON THE DEMAND OF WANG LABORATORIES, INC."

DO NOT SCALE

NO.	REVISION	BY	DATE	APPROVED
1	ORIGINATED PER DWR E953 APPD:	LLC	1-7-81	LDC 3-17-81
1/6	REVISED PER ECO 17325 APPD:	LDC	3-17-81	BK 3-17-81
2/1	REVISED PER ECO #18117 APPD:	BK	3-17-81	BK 3-17-81
3/2	REVISED PER ECO #18230 APPD:	BK	3-17-81	BK 3-17-81
4/3	REVISED PER ECO #18786 APPD:	BK	3-17-81	BK 3-17-81
5/3	REVISED PER ECO #18538 APPD:	BK	3-17-81	BK 4-10-81
6/4	REVISED PER ECO #18867 APPD:	BK	4-10-81	BK 4-10-81
7/5	REVISED PER ECO #18964 APPD:	BK	4-10-81	BK 4-10-81

WANG LABORATORIES, INC. LOWELL, MASS. U.S.A.

	BY	DATE	APPROVED BY	DATE
	DWN JT	1/23/81	E ENGR	1/24/81
	CHK	1/23/81	M ENGR	
			MFG ENGR	

MATERIAL

MODEL NO. 105

SEE ENGRG. SPECIFICATIONS No.

FINISH

TOL. EX. AS NOTED
XX ± FRAC. ±
XXX ± ANG. ± FINISH √

SCALE SHT 6 OF 6

TITLE: DISK I/O "A"

210-7650 | D | 7650 | -

WANG PART NUMBER | SIZE | DRAWING NUMBER | REV.

D 7650

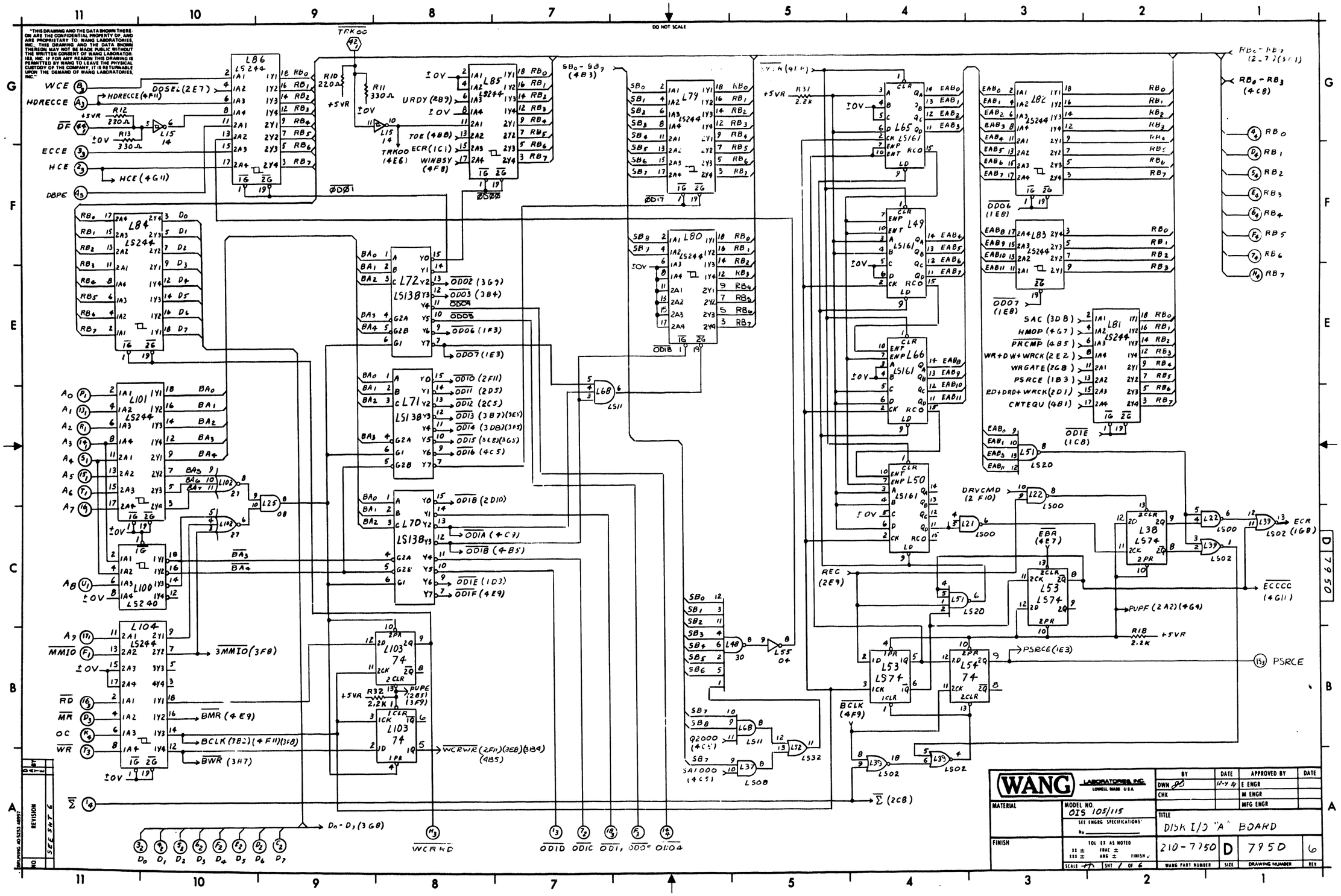

"THIS DRAWING AND THE DATA SHOWN THEREON ARE THE CONFIDENTIAL PROPERTY OF, AND ARE PROPRIETARY TO, WANG LABORATORIES, INC.; THIS DRAWING AND THE DATA SHOWN THEREON MAY NOT BE MADE PUBLIC WITHOUT THE WRITTEN CONSENT OF WANG LABORATORIES, INC. IF FOR ANY REASON THIS DRAWING IS PERMITTED BY WANG TO LEAVE THE PHYSICAL CUSTODY OF THE COMPANY, IT IS RETURNABLE UPON THE DEMAND OF WANG LABORATORIES, INC."
DO NOT SCALE
WANG
LABORATORIES, INC.
LOWELL, MASS. U.S.A.
MODEL NO.
OIS 105/115
SEE ENGRG SPECIFICATIONS
TITLE
DISK I/O "A" BOARD
210-7750
D
7950
6
WANG PART NUMBER
SIZE
DRAWING NUMBER
REV
DWN
CHK
E ENGR
M ENGR
MFG ENGR
MATERIAL
FINISH
SHT 1 OF 6
SEE SHT 6

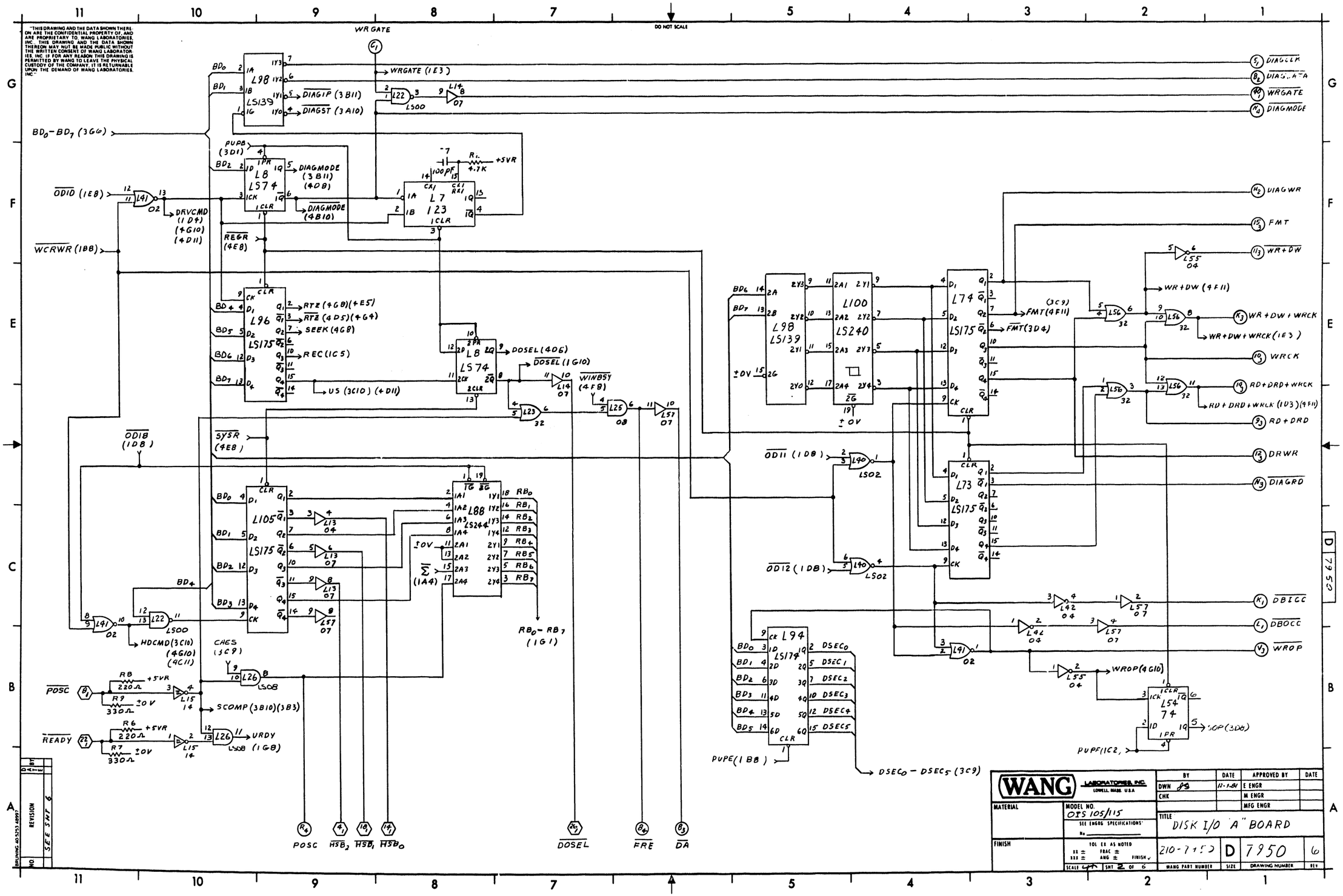

"THIS DRAWING AND THE DATA SHOWN THEREON ARE THE CONFIDENTIAL PROPERTY OF, AND ARE PROPRIETARY TO, WANG LABORATORIES, INC. THIS DRAWING AND THE DATA SHOWN THEREON MAY NOT BE MADE PUBLIC WITHOUT THE WRITTEN CONSENT OF WANG LABORATORIES, INC. IF FOR ANY REASON THIS DRAWING IS PERMITTED BY WANG TO LEAVE THE PHYSICAL CUSTODY OF THE COMPANY, IT IS RETURNABLE UPON THE DEMAND OF WANG LABORATORIES, INC."
DO NOT SCALE
WR GATE
WRGATE (1E3)
DIAGIP (3B11)
DIAGST (3A10)
BD0-BD7 (3G6)
PUPB (3D1)
DIAGMODE (3B11) (4D8)
DIAGMODE (4B10)
ODIO (1E8)
DRVCMD (1D4) (4G10) (4D11)
WCRWR (1B8)
REGR (4E8)
RTZ (4G8)(4E5)
RTZ (4D5)(4G4)
SEEK (4G8)
REC (1C5)
US (3C10) (4D11)
DOSEL (4D6)
DOSEL (1G10)
WINBSY (4F8)
SYSR (4E8)
ODIB (1D8)
HDCMD (3C10) (4G10) (4C11)
CHES (3C9)
SCOMP (3B10)(3B3)
URDY (1G8)
POSC
READY
RB0-RB7 (1G1)
POSC
HSB2
HSB1
HSB0
DOSEL
FRE
DA
DIAGCLK
DIAGDATA
WRGATE
DIAGMODE
DIAGWR
FMT
WR+DW
WR+DW (4F11)
WR+DW+WRCK
WR+DW+WRCK (1E3)
WRCK
RD+DRD+WRCK
RD+DRD+WRCK (1D3)(4F11)
RD+DRD
DRWR
DIAGRD
DBICC
DBOCC
WROP
WROP (4G10)
SOP (3D8)
PUPF (1C2)
FMT (4F11)
FMT (3D4)
ODI1 (1D8)
ODI2 (1D8)
PUPE (1B8)
DSEC0-DSEC5 (3C9)
WANG LABORATORIES, INC. LOWELL, MASS. U.S.A.
MODEL NO. OIS 105/115
SEE ENGRG SPECIFICATIONS
TITLE DISK I/O "A" BOARD
210-7950
D
7950
6
WANG PART NUMBER
SIZE
DRAWING NUMBER
REV
SHT 2 OF 6
REVISION
SEE SHT 6

"THIS DRAWING AND THE DATA SHOWN THERE ON ARE THE CONFIDENTIAL PROPERTY OF, AND ARE PROPRIETARY TO, WANG LABORATORIES, INC. THIS DRAWING AND THE DATA SHOWN THEREON MAY NOT BE MADE PUBLIC WITHOUT THE WRITTEN CONSENT OF WANG LABORATORIES, INC. IF FOR ANY REASON THIS DRAWING IS PERMITTED BY WANG TO LEAVE THE PHYSICAL CUSTODY OF THE COMPANY, IT IS RETURNABLE UPON THE DEMAND OF WANG LABORATORIES, INC."

DO NOT SCALE

HDRLLK (A4)

HDRDATA (F3)

XFERDATA (F3)

ODD2 (1E8)

DTR (U4)

FREEZEOFF (10)

L47 74 1PR 1CLR 1CK 1D 1Q

L47 74 2PR 2CLR 2CK 2D 2Q

L60 08

FMT·XFERDATA (3D3)

L75 32

PUPD (4A5)

L77 LS193 DN UP BOR CAR

SC0 SC1 SC2 SC3 SEC0 SEC1 SEC2 SEC3

SC4 SEC4

±0V

pL61

L89 LS244

SEC0 SEC1 SEC2 SEC3 SEC4 RB0 RB1 RB2 RB3 RB4 RB5 RB6 RB7

PUPE (1B8)

L76 30

+5VR

R33 2.2K

DSEC0 DSEC1 DSEC2 DSEC3 DSEC4 DSEC5

L78 LS266

L62 LS266

SAC (1E3)

SOP (2B1)

L26 LS08

FMT (2E3)

DSEC0 - DSEC5 (2A4)

SYSR (4E8)

US (2D9)

HMOP (4G7)

HDCMD (2B10)

L43 27

CAES (2B10)

PUPC (3C3)

L27 74 2PR 2CLR 2CK 2D 2Q 2PR

CNV (3A2)

FRCP (12)

L45 00

SCOMP (2B10)

DIAGIP (2G9)

L14 07

+5VR DIAGMODE (2F9)

R14 220Ω

L29 32

L14 07

IP (4F11)

IP (20)

R15 330Ω

±0V

SMSTO (4B9)

DIAGRST (2G9)

R19 2.2K

L59 10

C66A 470PF

+10V

IP (13)

DSRP (M3)

FF (P4)

CVN / SYSR (14)

SOT (4)

D0 - D7 (1A9)

±0V

L99 LS374 OC D0 D1 D2 D3 D4 D5 D6 D7 BD0 BD1 BD2 BD3 BD4 BD5 BD6 BD7

BLCK (1B10)

3MMIO (1B10)

L58 LS02

L55 04

ODI5 (1D8)

L75 32

R34 56Ω

L58 LS02

WCRWR (1B8)

R31B 56Ω

L75 32

ODI4 (1D8)

L58 LS02

L59 10

L45 00

R31A 56Ω

L75 32

ODI3 (1D8)

L58 LS02

BWR (1A10)

L42 04

L110 L195 SH/LD BD0 BD1 BD2 BD3 SC0 SC1 SC2 SC3

L93 L195 SH/LD BD4 BD5 BD6 BD7 SC4 SC5 SC6 SC7

L109 L195 SH/LD BD0 BD1 BD2 BD3 SC8 SC9 SC10 SC11

L108 L195 SH/LD BD4 BD5 BD6 BD7 SC12 SC13 SC14 SC15

L107 L195 SH/LD BD0 BD1 BD2 BD3 SC16 SC17 SC18 SC19

L106 L195 SH/LD BD4 BD5 BD6 BD7 SC20 SC21 SC22 HDROUT

HDROUT (U3)

BD0 - BD7 (2G11) (4C6)

ODI5 (1D8)

L92 LS244 SC0 SC1 SC2 SC3 SC4 SC5 SC6 SC7 RB0 RB1 RB2 RB3 RB4 RB5 RB6 RB7

ODI4 (1D8)

L91 LS244 SC8 SC9 SC10 SC11 SC12 SC13 SC14 SC15

ODI3 (1D8)

L90 LS244 SC16 SC17 SC18 SC19 SC20 SC21 SC22

L40 LS02

FMT·XFERDATA (3F10)

FMT (2E3)

WINBSY (4F8)

L29 32

RB0 - RB7 (1G11)

L87 LS244 ±0V RB0 RB1 RB2 RB3 RB4 RB5 RB6 RB7

+5VR

R3 2.2K

PUPE 2F10

L10 LS74 1PR 1CLR 1CK 1D 1Q

L10 LS74 2PR 2CLR 2CK 2D 2Q

L57 07

CUBSY (U4)

+5VR

R4 2.2K

PUPC (3C10) (4A8)

L11 LS74 1PR 1CLR 1CK 1D 1Q

L37 LS08

BD7

BD0

L11 LS74 2PR 2CLR 2CK 2D 2Q

ODD3 (1E8)

L40 LS02

WLRWR (1B8)

SCOMP (2B10)

L29 LS32

BTSINT (4F5)

L74 74 1PR 1CLR 1CK 1D 1Q

BCLK (1B10)

CNV (3B9)

L25 08

L74 74 2PR 2CLR 2CK 2D 2Q

L15 14

SCM1 (16)

WANG LABORATORIES, INC. LOWELL, MASS. U.S.A.	BY	DATE	APPROVED BY	DATE
	DWN	12-3-79	E ENGR	
	CHK		M ENGR	
			MFG ENGR	
MATERIAL	MODEL NO. OIS 105/115 SEE ENGRG SPECIFICATIONS No.	TITLE DISK I/O "A" BOARD		
FINISH	TOL UN AS NOTED XX ± FRAC ± XXX ± ANG ± FINISH √	210-7950	D	7950	6
	SCALE FX	SHT 3 OF 6	WANG PART NUMBER	SIZE	DRAWING NUMBER	REV

NO	REVISION	BY	DATE
	SEE SHT 6		

BRUNING 40-5251 48997

D 7950

"THIS DRAWING AND THE DATA SHOWN THEREON ARE THE CONFIDENTIAL PROPERTY OF, AND ARE PROPRIETARY TO WANG LABORATORIES, INC. THIS DRAWING AND THE DATA SHOWN THEREON MAY NOT BE MADE PUBLIC WITHOUT THE WRITTEN CONSENT OF WANG LABORATORIES, INC. IF FOR ANY REASON THIS DRAWING IS PERMITTED BY WANG TO LEAVE THE PHYSICAL CUSTODY OF THE COMPANY, IT IS RETURNABLE UPON THE DEMAND OF WANG LABORATORIES, INC."

DO NOT SCALE

BY	DATE	APPROVED BY	DATE
DWN	11-7-77	E ENGR	
CHK		M ENGR	
		MFG ENGR	

WANG LABORATORIES, INC. LOWELL, MASS. U.S.A.

MATERIAL

MODEL NO. 015 105/115
SEE ENGRG SPECIFICATIONS
No.

FINISH

TOL ER AS NOTED
XX ± FRAC ± FINISH √
XXX ± ANG ±
SCALE SHT 4 OF 6

TITLE: DISK I/O "A" BOARD

210-7950 | D | 7 7 5 0 | 6

WANG PART NUMBER | SIZE | DRAWING NUMBER | REV

NO	REVISION	BY	DATE
	SEE SHT 6		

DRAWING 40 5253 4897

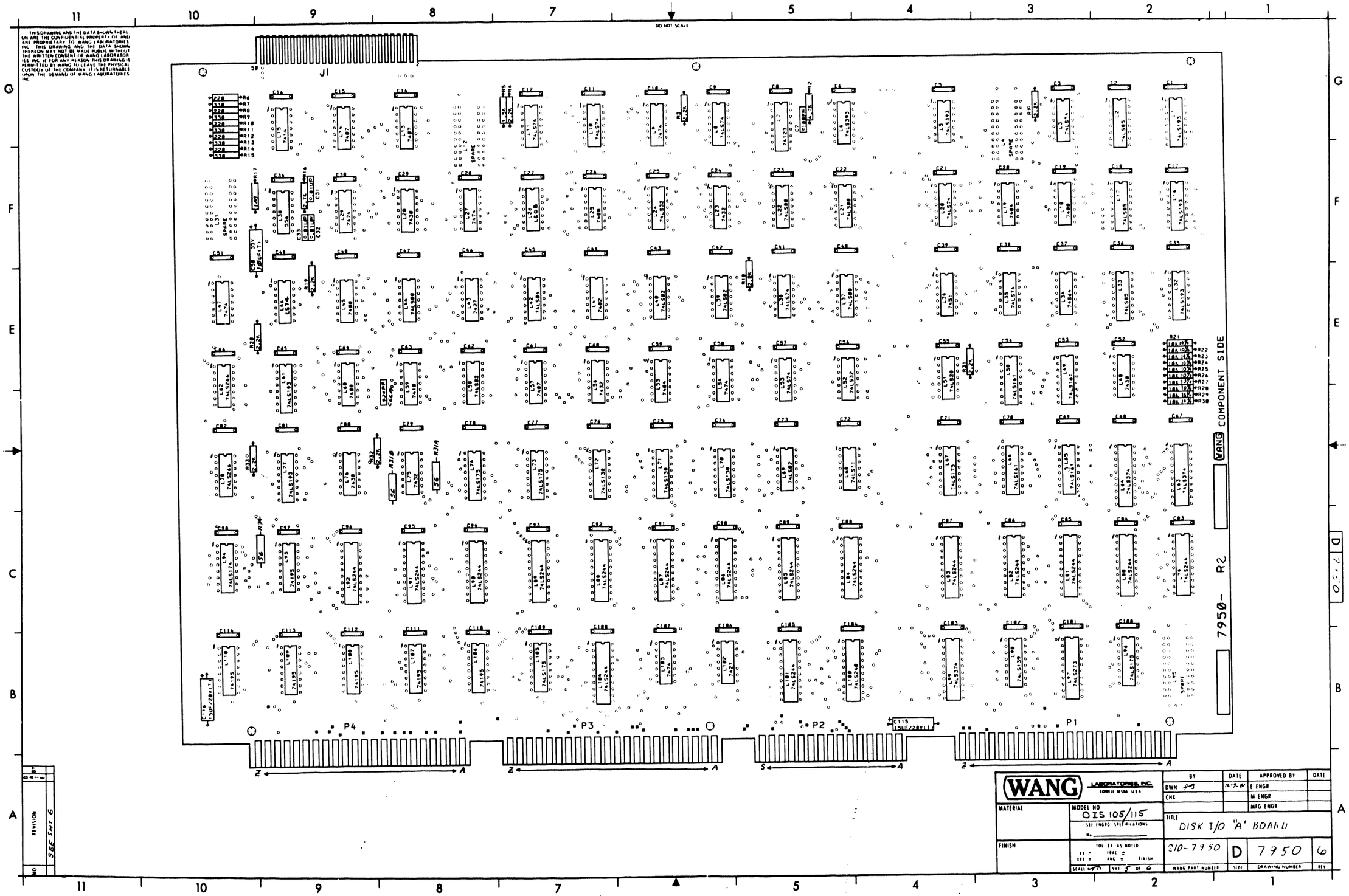

DO NOT SCALE
J1
P4
P3
P2
P1
7950- R2
WANG COMPONENT SIDE
WANG LABORATORIES, INC.
LOWELL MASS USA
MODEL NO
OIS 105/115
SEE ENGRG SPECIFICATIONS
MATERIAL
FINISH
TOL EX AS NOTED
SCALE
SHT 5 OF 6
BY
DATE
APPROVED BY
DATE
DWN
CHK
E ENGR
M ENGR
MFG ENGR
TITLE
DISK I/O "A" BOARD
210-7950
WANG PART NUMBER
D
SIZE
7950
DRAWING NUMBER
6
REV
REVISION
SEE SHT 6

"THIS DRAWING AND THE DATA SHOWN THEREON ARE THE CONFIDENTIAL PROPERTY OF, AND ARE PROPRIETARY TO, WANG LABORATORIES, INC. THIS DRAWING AND THE DATA SHOWN THEREON MAY NOT BE MADE PUBLIC WITHOUT THE WRITTEN CONSENT OF WANG LABORATORIES, INC. IF FOR ANY REASON THIS DRAWING IS PERMITTED BY WANG TO LEAVE THE PHYSICAL CUSTODY OF THE COMPANY, IT IS RETURNABLE UPON THE DEMAND OF WANG LABORATORIES, INC."

DO NOT SCALE

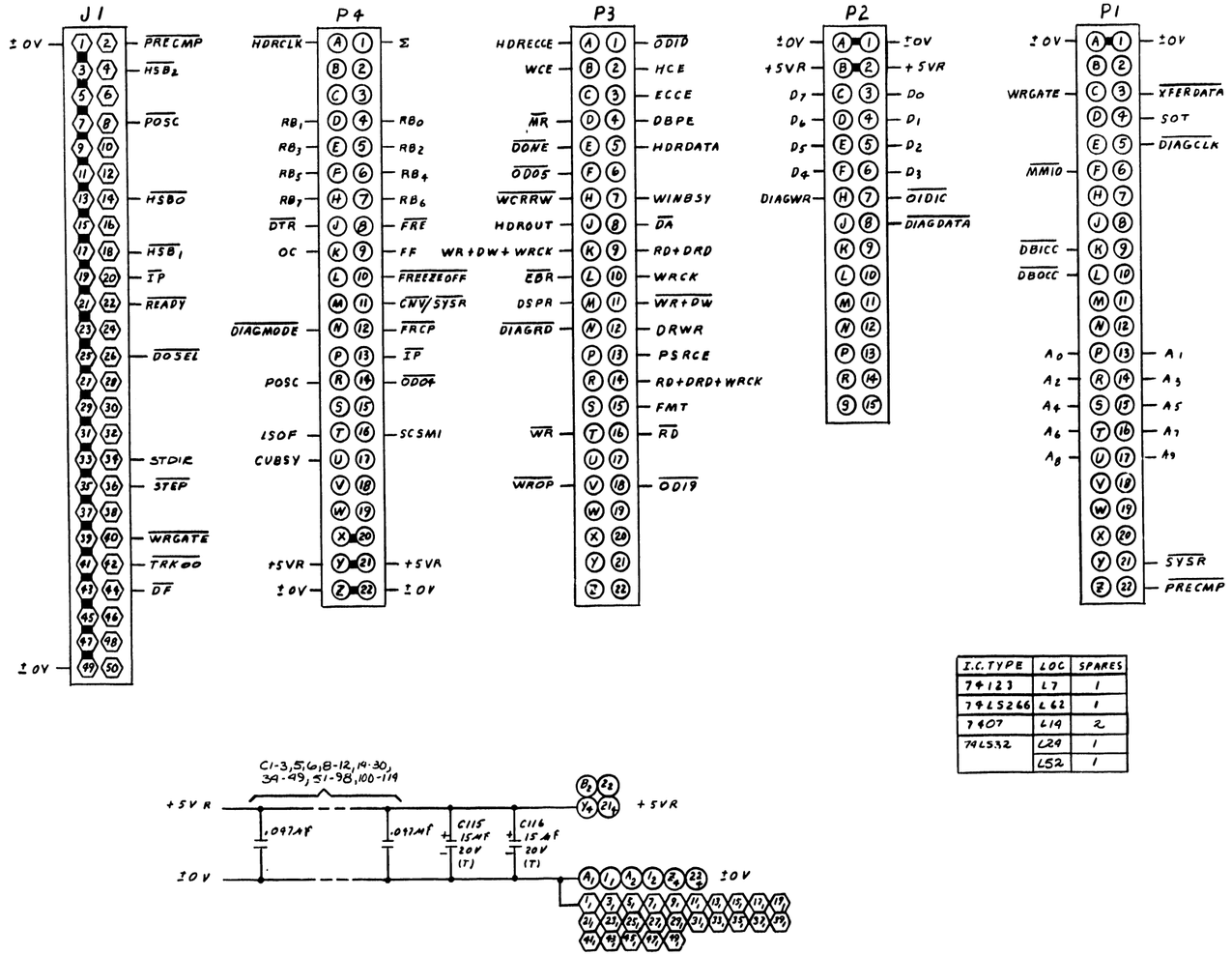

NOTE:
1. ALL RESISTORS ARE ¼W 5% UNLESS OTHERWISE SPECIFIED

I.C. TYPE	LOC	SPARES
74123	L7	1
74LS2662	L62	1
7407	L19	2
74LS32	L29	1
	L52	1

COMPONENT	TYPE	W.L. PART No.
R1, 3, 4, 18, 19, 20, 31, 32, 33	2.2K ¼W 5%	330-3025
R2	4.7K ¼W 5%	330-3048
R5	1.5K ¼W 5%	330-3016
R6, 8, 10, 12, 14	220Ω ¼W 5%	330-2023
R7, 9, 11, 13, 15	330Ω ¼W 5%	330-2039
R16	2.7K ¼W 5%	330-3028
R17	1M ¼W 5%	330-6011
R21-30	10K ¼W 10%	330-4010
R31A, 31B, 34	56Ω ¼W 5%	330-1057
C7	100PF 500V	300-1100
C31, 32, 33	.01MF 25V	300-1903
C50	10MF 20V (T)	300-4065
C115, 116	15MF 20V (T)	300-4022
C66A	470 PF 500V	300-1470
C1-3,5,6,8-12,19-30, 39-49,51-98,100-119	.047uF 50V	300-1966

I.C. LOCATION	TYPE	W.L. PART No.
L1, 16, 32, 61, 77	74LS193	376-0220
L2, 17, 33	74LS85	376-0218
L3, 8, 10, 11, 20, 35, 38, 46, 53	74LS74	376-0155
L4, 12, 31, 95	SPARE	
L5, 6	74LS393	376-0307
L7	74123	376-0080
L9, 21, 23, 47, 54, 103	7474	376-0006
L13, 14, 57	7407	376-0056
L18, 45	7400	376-0002
L19, 55	7404	376-0010
L21, 22, 44	74LS00	376-0207
L23, 56, 75	7432	376-0093
L24, 52	74LS32	376-0211
L25, 60	7408	376-0081
L28, 48, 76	7430	376-0031
L30	NE556	376-0341
L34	74S64	376-0201
L36	7451	376-0012
L37, 26	74LS08	376-0153
L39, 40, 58, 69	74LS02	376-0208
L41	7402	376-0016
L42	74LS04	376-0180
L43, 102	7427	376-0125
L49, 50, 65, 66	74LS161	376-0233
L51	74LS20	376-0210
L59	7410	376-0003
L62, 78	74LS266	376-0148
L63, 64, 99	74LS374	376-0286
L67, 73, 79, 96, 105	74LS175	376-0160
L68	74LS11	376-0225
L70, 71, 72	74LS138	376-0294
L79-92, 101, 104	74LS244	376-0288
L93, 106-110	74195	376-0097
L94	74LS174	376-0159
L97	74LS273	376-0302
L98	74LS139	376-0226
L100	74LS240	376-0297
L15	7414	376-0139

MNEMONICS	COOR'D
WCE	1G11
WCARD	1A8
WINBSY	4G1
WR	1B11
WRCK	2E1
WR+DW	2F1
WR+DW+WRCK	2B1
WRGATE	2G9
WRGATE	2G1
WRDP	2B1
XFERDATA	3G5
Σ	1A11

MNEMONICS	COOR'D
A0 - A9	1G11
CNV/SYSR	3A8
CUBSY	3D1
D0 - D7	1A10
DA	2A6
DBICC	1C1
DBOCC	2C1
DBPE	1F11
DF	1G11
DIAGCLK	2G1
DIAGDATA	2G1
DIAGMODE	2G1
DIAG RD	2D1
DIAG WR	2F1
DONE	4F11
DOSEL	2A7
DRWR	2D1
DSRP	3A9
DTR	3G11
EBR	4A7
ECCE	1F11
FF	3A8
FMT	2F1
FRCP	3B11
FRE	2A6
FREEZEOFF	3G11
HCE	1F11
HDRCLK	3G8
HDRDATA	3G6
HDRECCE	1G11
HDROUT	3A5
HSB0 - HSB2	2A9
IP	3B1
IP	3A10
LSOF	4F11
MMIO	1B11
MR	1B11
OC	1B11
ODD4	1A6
ODD5	1A6
ODD18	1A7
ODD19	1A7
ODID	1A7
POSC	2A9
POSC	2B11
PRECMP	4A5
PSRCE	1B1
RB0 - RB7	1G1
RD	1B11
RD+DRD	2D1
RD+DRD+WRCK	2E1
READY	2B11
SCSMI	3B1
SOT	3A7
STEP	4G1
STPDIR	4C1
SYSR	4A7
TRK00	1G9

E-REV 3

NO	REVISION	BY	DATE
0/0	ORIG PER DWR#E1381 APP'D:	DO	11-9-81
1/0	REVISED PER ECO#21233 APP'D:	DO	11-9-81
2/1	REVISED PER ECO#21458 APP'D:	DO	12-18-81
3/2	REVISED PER ECO#21918 APP'D:	KED	1-11-82
4/2	REVISED PER ECO#22217 APP'D:	FSS	2-18-82
5/3	REVISED PER ECO#22468 APP'D:	LME	2-18-82
6/3	REVISED PER ECO#22468 APP'D:	LDB	3-29-82

WANG LABORATORIES, INC. LOWELL, MASS. U.S.A.

	BY	DATE	APPROVED BY	DATE
	DWN DO	12-9-81	E ENGR	1/11/82
	CHK	1/11/82	M ENGR	
			MFG ENGR	

MATERIAL — MODEL NO. OIS 105/115 — SEE ENGRG SPECIFICATIONS No.

FINISH — TOL EX AS NOTED: XX ± FRAC ±, XXX ± ANG ±, FINISH √

TITLE: DISK I/O "A" BOARD

SCALE — SHT 6 OF 6 — WANG PART NUMBER: 210-7950 — SIZE: D — DRAWING NUMBER: 7950 — REV: 6

D 7950

"THIS DRAWING AND THE DATA SHOWN THEREON ARE THE CONFIDENTIAL PROPERTY OF, AND ARE PROPRIETARY TO, WANG LABORATORIES, INC. THIS DRAWING AND THE DATA SHOWN THEREON MAY NOT BE MADE PUBLIC WITHOUT THE WRITTEN CONSENT OF WANG LABORATORIES, INC. IF FOR ANY REASON THIS DRAWING IS PERMITTED BY WANG TO LEAVE THE PHYSICAL CUSTODY OF THE COMPANY, IT IS RETURNABLE UPON THE DEMAND OF WANG LABORATORIES, INC."

DO NOT SCALE

NOTES:

1) ONLY CHANGE NEEDED FOR R2 BOARDS, PER ECO# 188666

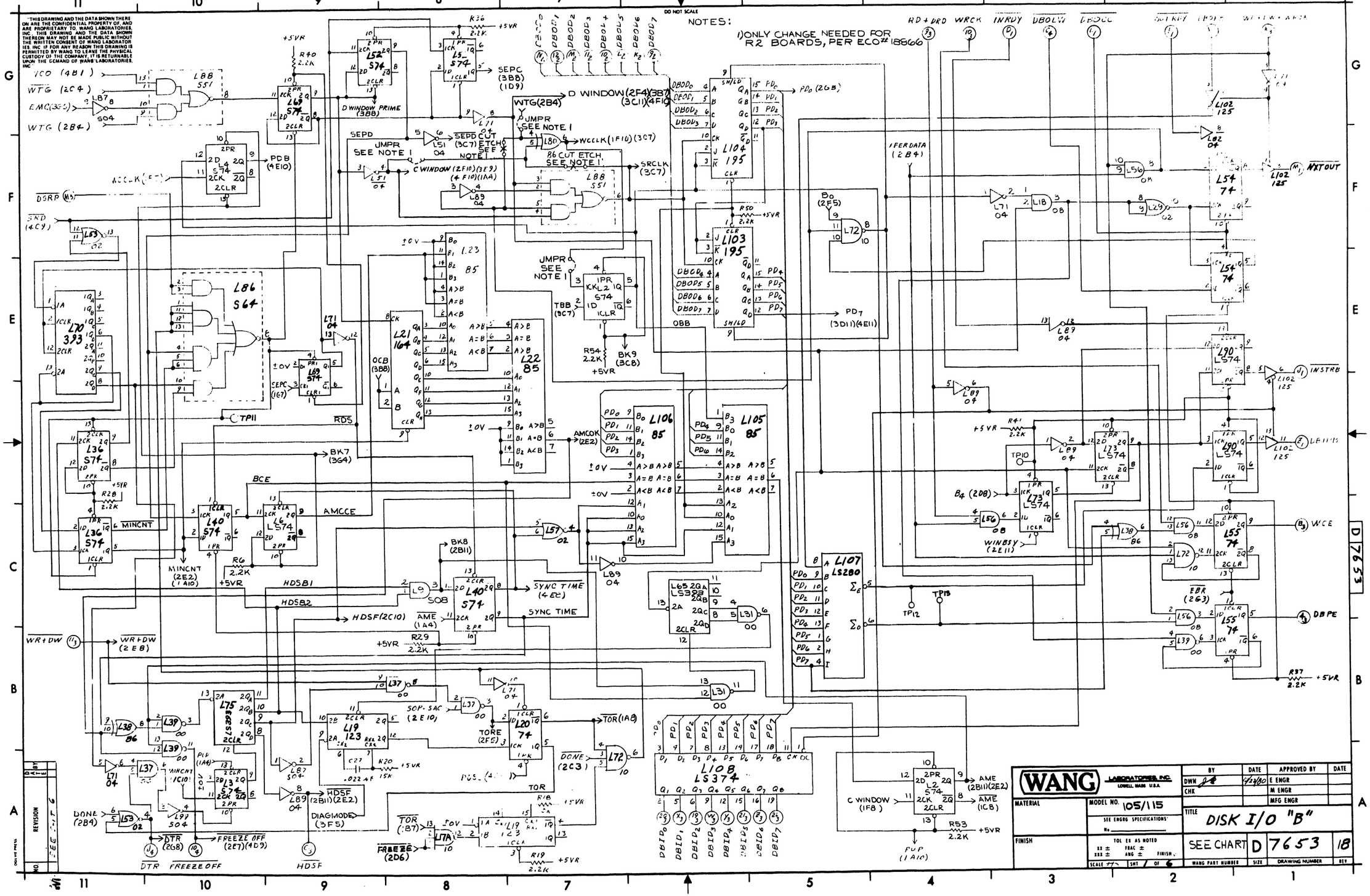
WG (2C4)
EMC (3E5)
WTG (2B4)
L88 S51
S04
+5VR
R40 2.2K
L52 S74
L51 S74
SEPC (3B8) (1D9)
D WINDOW PRIME (3B8)
SEPD
UMPR SEE NOTE 1
SEPD CUT ETCH SEE NOTE 1
L51 04
L11 04
WTG(2B4)
D WINDOW (2F4)(3B7) (3C11)(4F10)
L80
WCCLK (1F10)(3C7)
86 CUT ETCH SEE NOTE 1
SRCLK (3C7)
C WINDOW (2F10)(3E9) (4F10)(1A4)
L89 04
L88 S51
L69 S74
PDB (4E10)
DSRP (M5)
SAD (4C9)
L53 02
L86 S64
L20 393
L71 04
TP11
RD5
L36 S74
L40 S74
L46 S74
MINCNT
MINCNT (2E2) (1A10)
R28 2.2K
R26 2.2K
R6 2.2K
BCE
AMCCE
BK7 (3G4)
BK8 (2B11)
L57 02
L89 04
L9 S08
L40 S74
SYNC TIME (4E2)
SYNC TIME
HDSB1
HDSB2
HDSF (2C10)
AME (1A4)
R29 2.2K
WR+DW (11/3)
WR+DW (2E8)
L75 LS393
L19 123
L20 74
L37
L38 86
L39 00
L87 S04
L89 04
PLD (1A4)
MINCNT (1C10)
DONE (2B4)
L53 02
L97 S04
DTR (2G8)
FREEZE OFF (2E7)(4D9)
HDSF (2B11)(2E2)
DIAGMODE (3F5)
SCP-SAC (2E10)
TORE (2F5)
TOR (1A8)
DONE (2C3)
L72
C27 .022μF
R20 15K
R19 2.2K
FREEZE (2D6)
TOR (1B7)
L17A
L21 164
L22 85
OCB (3B8)
BK9 (3C8)
R54 2.2K
TBB (3C7)
L10 74
L03 74
L04 74
L05 74
L06 74
L07 LS280
L08 LS374
L09 LS74
L10 LS74
L11 LS74
L12 LS74
L13 LS74
L14 LS74
L15 LS74
L16 LS74
L17 LS74
L18 LS74
L19 LS74
L20 LS74
L21 LS74
L22 LS74
L23 LS74
L24 LS74
L25 LS74
L26 LS74
L27 LS74
L28 LS74

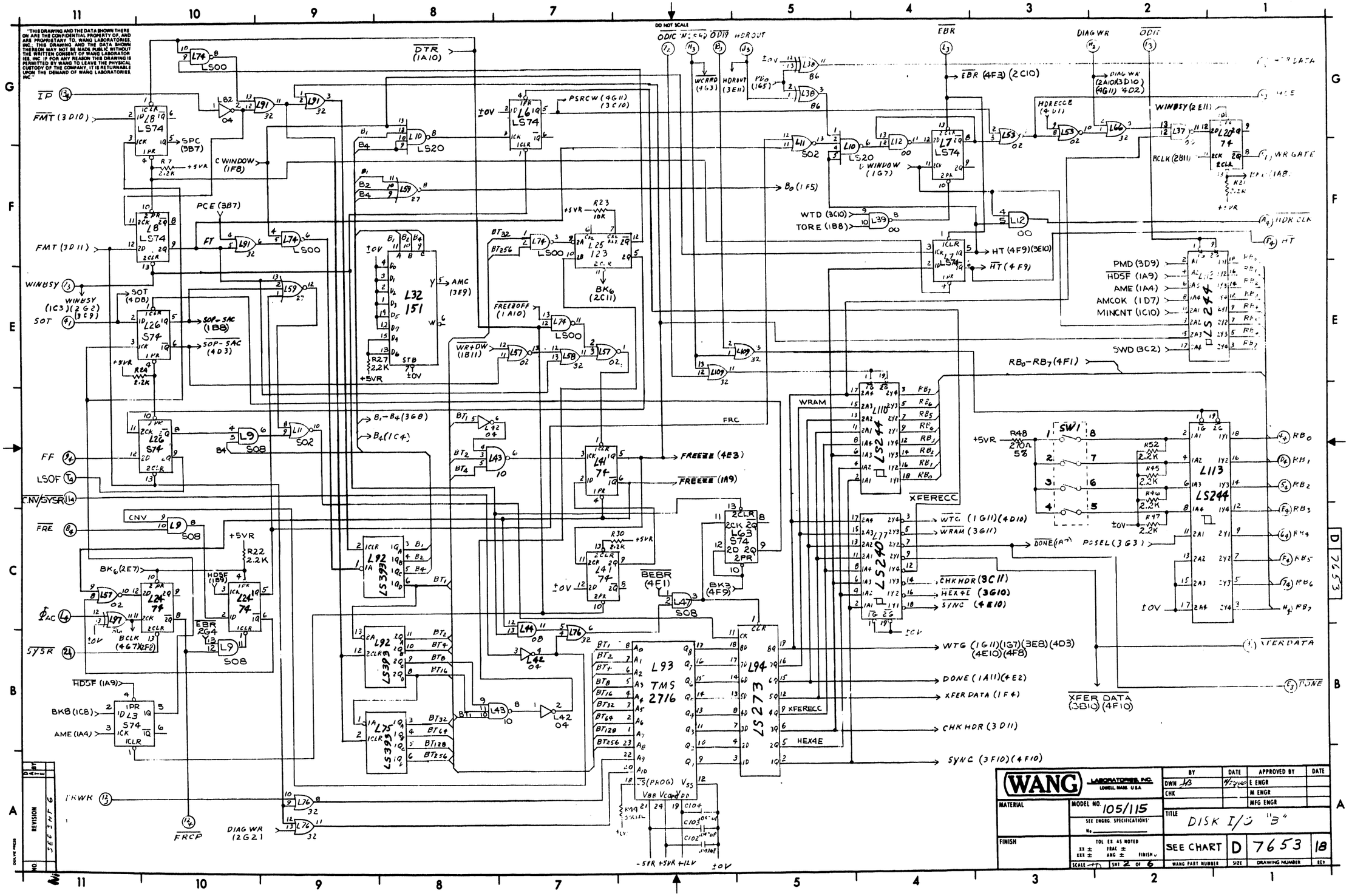

"THIS DRAWING AND THE DATA SHOWN THERE ON ARE THE CONFIDENTIAL PROPERTY OF, AND ARE PROPRIETARY TO, WANG LABORATORIES, INC. THIS DRAWING AND THE DATA SHOWN THEREON MAY NOT BE MADE PUBLIC WITHOUT THE WRITTEN CONSENT OF WANG LABORATORIES, INC. IF FOR ANY REASON THIS DRAWING IS PERMITTED BY WANG TO LEAVE THE PHYSICAL CUSTODY OF THE COMPANY, IT IS RETURNABLE UPON THE DEMAND OF WANG LABORATORIES, INC."
DO NOT SCALE
WANG LABORATORIES, INC. LOWELL, MASS. U.S.A.
MODEL NO. 105/115
SEE ENGRG. SPECIFICATIONS
TITLE DISK I/O "B"
SEE CHART
D 7653 18
SHT 2 OF 6

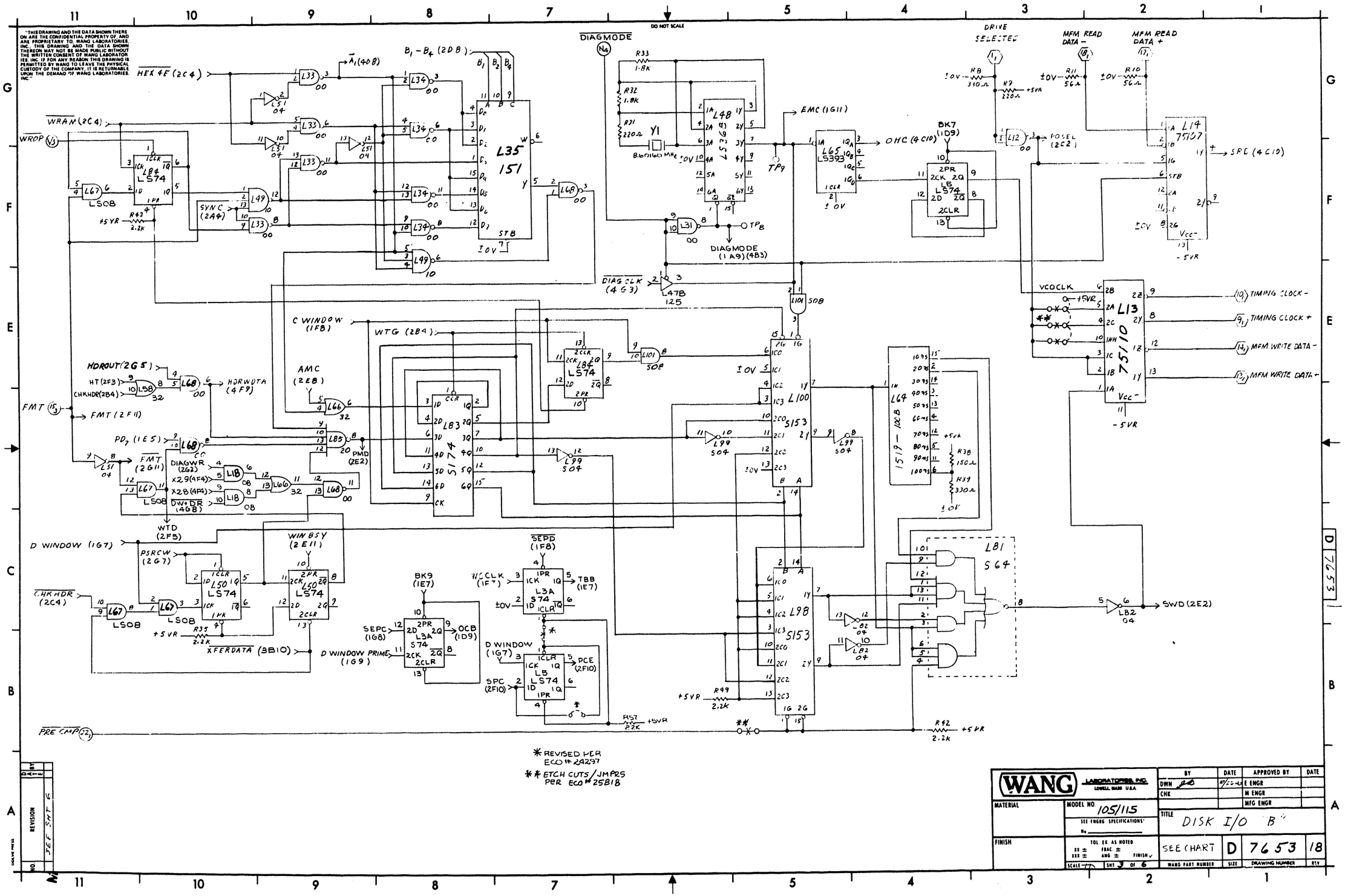

"THIS DRAWING AND THE DATA SHOWN THERE ON ARE THE CONFIDENTIAL PROPERTY OF, AND ARE PROPRIETARY TO, WANG LABORATORIES, INC. THIS DRAWING AND THE DATA SHOWN THEREON MAY NOT BE MADE PUBLIC WITHOUT THE WRITTEN CONSENT OF WANG LABORATORIES, INC. IF FOR ANY REASON THIS DRAWING IS PERMITTED BY WANG TO LEAVE THE PHYSICAL CUSTODY OF THE COMPANY, IT IS RETURNABLE UPON THE DEMAND OF WANG LABORATORIES, INC."
DO NOT SCALE
DIAGMODE
DRIVE SELECTED
MFM READ DATA −
MFM READ DATA +
HEX 4E (2C4)
WRAM (2C4)
WROP
SYNC (2A4)
B1 − B4 (2D8)
L35 151
L48 LS368
Y1 8.60160 MHz
EMC (1G11)
OHC (4C10)
BK7 (1D9)
POSEL (2C2)
L14 75107
SRD (4C10)
DIAGMODE (1A9)(4B3)
DIAG CLK (4G3)
L47B 125
VCOCLK
L13 75110
TIMING CLOCK −
TIMING CLOCK +
MFM WRITE DATA −
MFM WRITE DATA +
C WINDOW (1F8)
WTG (2B4)
AMC (2E8)
HDROUT (2G5)
HT (2F3)
CHKHDR (2B4)
HDRWDTA (4F9)
FMT
FMT (2F11)
PD7 (1E5)
PMD (2E2)
DIAGWR (2G2)
X29 (4F4)
X28 (4F4)
DW+DR (4G8)
WTD (2F5)
L83 S174
L100 S153
L64 1519 − 100B
D WINDOW (1G7)
PSRCW (2G7)
WIN BSY (2E11)
CHKHDR (2C4)
XFERDATA (3B10)
BK9 (1E7)
SEPC (1G8)
OCB (1D9)
D WINDOW PRIME (1G9)
SEPD (1F8)
WCCLK (1F7)
TBB (1E7)
D WINDOW (1G7)
PCE (2F10)
SPC (2F10)
L98 S153
L81 S64
SWD (2E2)
PRE CMP
* REVISED PER ECO # 24297
** ETCH CUTS/JMPRS PER ECO # 25818
WANG LABORATORIES, INC. LOWELL, MASS. U.S.A.
MATERIAL
MODEL NO. 105/115
SEE ENGRG SPECIFICATIONS
FINISH
TOL. EX. AS NOTED
SCALE
SHT 3 OF 6
BY
DATE
APPROVED BY
DWN
CHK
E ENGR
M ENGR
MFG ENGR
TITLE DISK I/O "B"
SEE CHART
D
7653
18
WANG PART NUMBER
SIZE
DRAWING NUMBER
REV
REVISION
SEE SHT 6

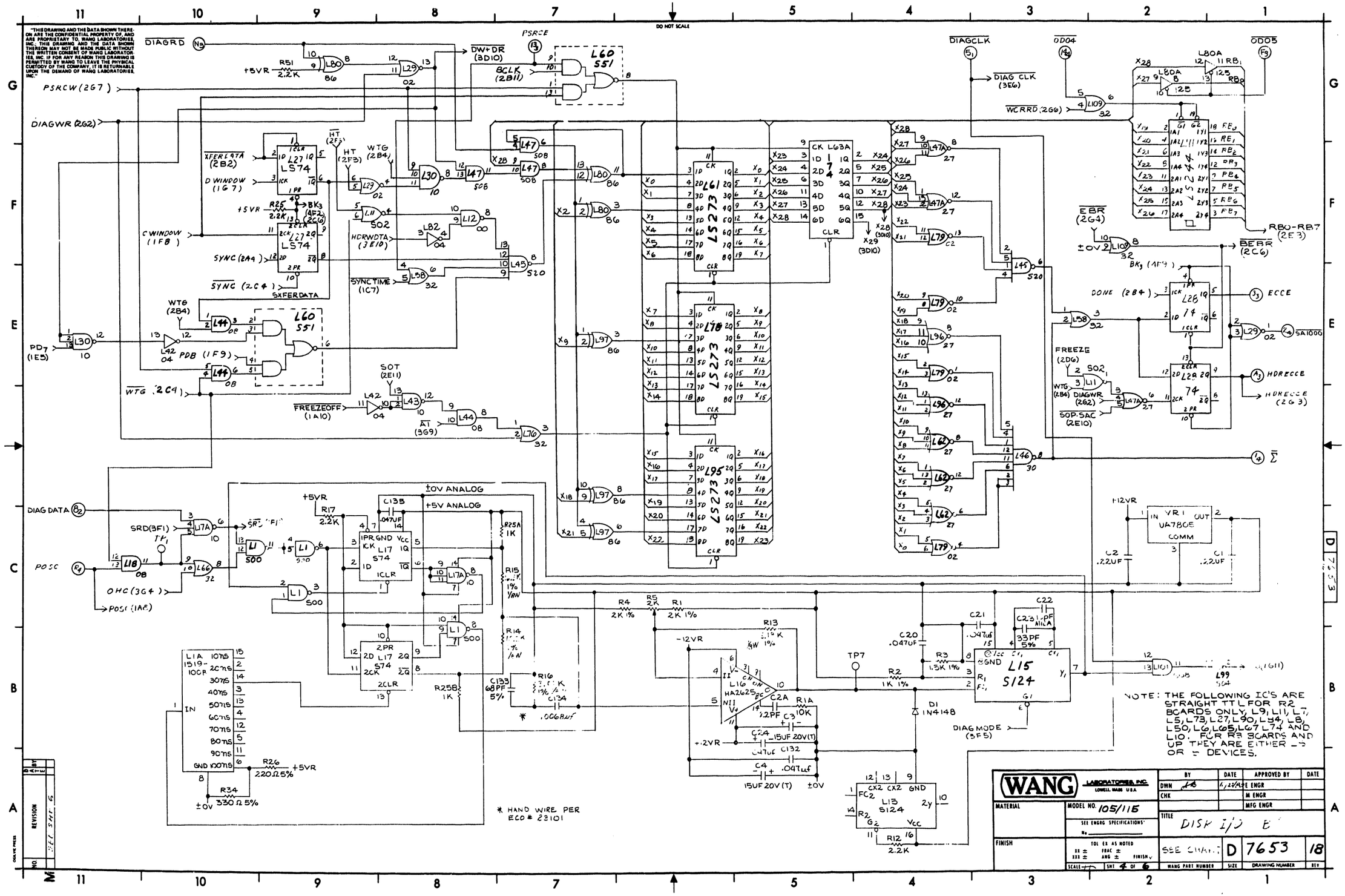

"THIS DRAWING AND THE DATA SHOWN THEREON ARE THE CONFIDENTIAL PROPERTY OF, AND ARE PROPRIETARY TO, WANG LABORATORIES, INC. THIS DRAWING AND THE DATA SHOWN THEREON MAY NOT BE MADE PUBLIC WITHOUT THE WRITTEN CONSENT OF WANG LABORATORIES, INC. IF FOR ANY REASON THIS DRAWING IS PERMITTED BY WANG TO LEAVE THE PHYSICAL CUSTODY OF THE COMPANY, IT IS RETURNABLE UPON THE DEMAND OF WANG LABORATORIES, INC."
DO NOT SCALE
DIAGRD
PSRCW (2G7)
DIAGWR (2G2)
PD7 (1E5)
DIAG DATA
POSC
OHC (3G4)
POSC (1A8)
SRD (3F1)
XFERDATA (2B2)
D WINDOW (1G7)
C WINDOW (1F8)
SYNC (2A4)
SYNC (2C4)
SXFERDATA
WTG (2B4)
PDB (1F9)
WTG (2C4)
FREEZEOFF (1A10)
SOT (2E11)
A1 (3G9)
DW+DR (3D10)
BCLK (2B11)
PSRCE
HT (2F3)
WTG (2B4)
HDRWDTA (3E10)
SYNCTIME (1C7)
±0V ANALOG
+5V ANALOG
DIAGCLK
DIAG CLK (3E6)
WCRRD (2G6)
OD04
OD05
EBR (2G4)
BEBR (2C6)
RB0-RB7 (2E3)
DONE (2B4)
ECCE
SA1000
FREEZE (2D6)
DIAGWR (2G2)
SOP.SAC (2E10)
HDRECCE
HDRECCE (2G3)
DIAG MODE (3F5)
TP7
L60 S51
L61 LS273
L78 LS273
L95 LS273
L63A 174
L28 74
L29 74
L15 S124
L16 HA2625
L13 S124
L17 S74
L1A 1519-100R
VR1 UA780E
L99 S04
* HAND WIRE PER ECO # 23101
NOTE: THE FOLLOWING IC'S ARE STRAIGHT TTL FOR R2 BOARDS ONLY, L9, L11, L7, L5, L73, L27, L90, L34, L8, L50, L6, L65, L67 L74 AND L10. FOR R3 BOARDS AND UP THEY ARE EITHER L5 OR L6 DEVICES.
WANG LABORATORIES, INC. LOWELL, MASS. U.S.A.
MODEL NO. 105/115
SEE ENGRG SPECIFICATIONS
TITLE DISK I/O B
SEE CHART
D 7653 18
WANG PART NUMBER
SIZE
DRAWING NUMBER
REV
SHT 4 OF 6

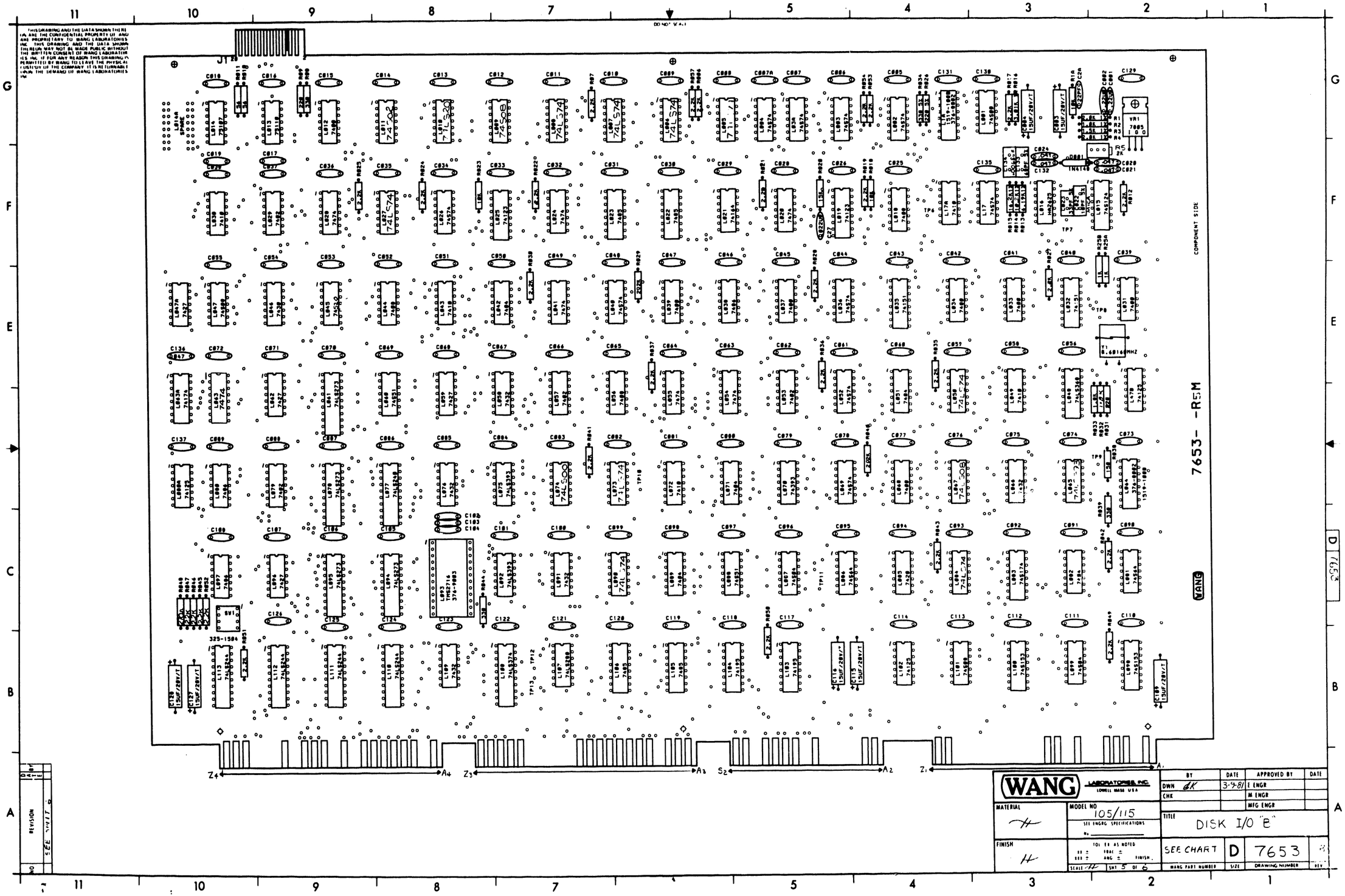

DO NOT SCALE
COMPONENT SIDE
7653- -R5M
WANG
WANG LABORATORIES, INC.
LOWELL MASS USA
BY
DATE
APPROVED BY
DATE
DWN GK
3-9-81
E ENGR
CHK
M ENGR
MFG ENGR
MATERIAL
MODEL NO
105/115
SEE ENGRG SPECIFICATIONS
TITLE
DISK I/O "B"
FINISH
TOL EX AS NOTED
SCALE
SHT 5 OF 6
SEE CHART
D
7653
WANG PART NUMBER
SIZE
DRAWING NUMBER
REV
REVISION
SEE SHEET 6

"THIS DRAWING AND THE DATA SHOWN THERE ON ARE THE CONFIDENTIAL PROPERTY OF, AND ARE PROPRIETARY TO, WANG LABORATORIES, INC. THIS DRAWING AND THE DATA SHOWN THEREON MAY NOT BE MADE PUBLIC WITHOUT THE WRITTEN CONSENT OF WANG LABORATORIES, INC. IT IS FOR ANY REASON THIS DRAWING IS PERMITTED BY WANG TO LEAVE THE PHYSICAL CUSTODY OF THE COMPANY, IT IS RETURNABLE UPON THE DEMAND OF WANG LABORATORIES, INC."

DO NOT SCALE

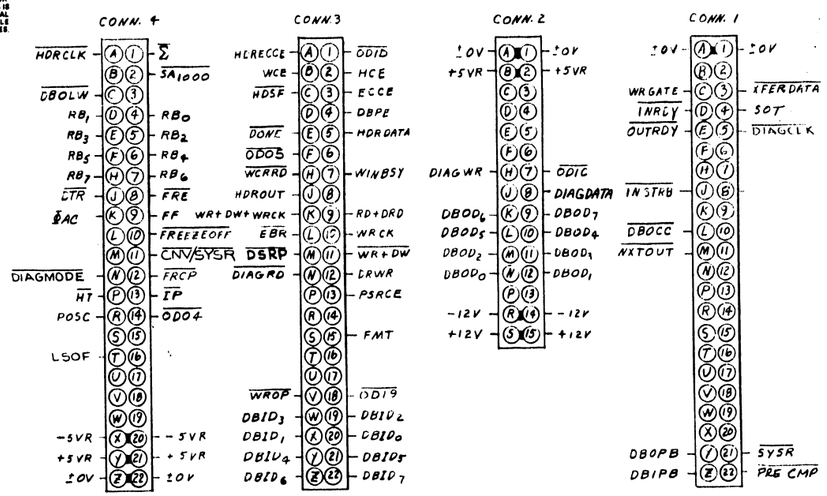

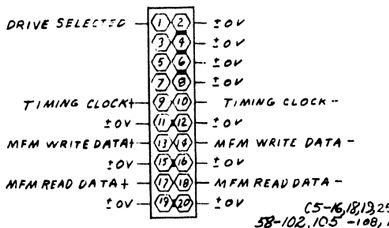

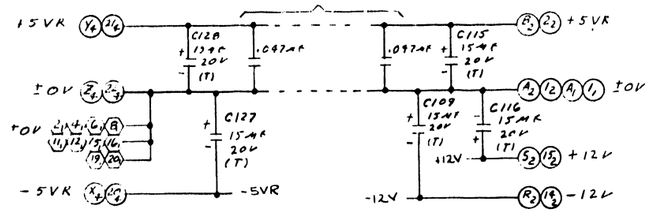

I.C. TYPE	LOC	SPARES
74S74	L4	1
	L47B	3
74125	L80A	2
74S04	L87	4
	L99	1
7404	L42	1
74S08	L101	1
7410	L49	1
74LS368	L48	1
7420	L85	1
7427	L59	1
	L96	1
7432	L91	1
7474	L63	1

I.C. LOCATION	W.L. PART No.	TYPE
L1	376-0228	74S00
L1A, 64	376-8002	1519-1008
L2,3,17,26,52,60,10 11,14,34,36,40	376-0202	74S74
L20,24,28,41, 54,55,63	376-0006	1474
L18,44,56	376-0081	7408
L85	376-0004	7420
L29,53,57,79	376-0016	7402
L12,31,33,34,37, 39,68	376-0002	7400
113	376-0255	75110
114	376-0146	75107
114A		SPARE
L15	376-0273	74S124
116	376-0292	HA2625
L17A, 30,43,49,72	376-0003	7410
L19,25	376-0080	74123
L21	376-0102	74164
L22,23,105,106	376-0087	7485
L32,35	376-0047	74151
L38,80,97	376-0036	7486
L42,51,71,82,89	376-0010	7404
L46	376-0031	7430
L9,47,101	376-0200	74S08
L47A,59,62,96	376-0125	7427
L47B,80A,102	376-0324	74125
L48	376-0193	74LS368
L58,66,76,91,109	376-0093	7432
L60,88	376-0184	74S51
L61,78,94,95	376-0302	74LS273
L63A	376-0098	74174
L70	376-0330	74393
L65,75,92	376-0307	74LS393
177	376-0297	74LS240
L81,86	376-0201	74S64
L83	376-0247	74S174
L87,99	376-0197	74S04
L93	SEE CHART	TMS2716
L103,104	376-0097	74195
L107	376-0242	74LS280
L108	376-0286	74LS374
L110-113	376-0288	74LS244
L98,100	376-0215	74S153
L93	376-9003	24 PIN SOCKET
L5-8,27,50,73,84,90	376-0155	74LS74
L10	376-0210	74LS20
L11	376-0199	74S02
L67	376-0153	74LS08
L74	376-0207	74LS00
L45	376-0230	74S20

COMPONENT	W.L. PART No.	TYPE
R1,4	333-0111	2K 1/8W 1%
R2	333-0089	1K 1/8W 1%
R3	330-0107	1.5K 1/2W 1%
R5	330-1057	2K POT 90°
R6,7,12,17,19,21,22, 24,25,27 30,35-37, 40-43,49-51,53,54, 57,65-67,52	330-3023	2.2K 1/4W 5%
R8,39,44,34	330-2034	330Ω 1/4W 5%
R9,31,26	330-2023	220Ω 1/4W 5%
R10,11	330-1067	56Ω 1/4W 5%
P13	333-0069	6.19K 1/8W 1%
P14,15	333-0081	16.2K 1/8W 1%
R16	333-0063	3.31K 1/8W 1%
R18,23	330-4011	10K 1/4W 5%
R20	330-4016	15K 1/4W 5%
R33,32	330-3019	1.8K 1/4W 5%
R38	330-2016	150Ω 1/4W 5%
R48	330-2028	270Ω 1/4W 5%
R25A,25B	330-3011	1K 1/4W 5%
C1,2	300-1902	.22MF
C3,4,109,115,116, 127,128	300-4022	.15MF 20V (T)
C2A	300-1022	22PF
C23	300-1033	33PF 500V
C5-19,7A,20,21, 24-26,28-56, 58-108,110-114, 117-126,129-132, 135-137	300-1766	.047MF 50V
C22	300-5033	10PF 500V (MICA)
C27	300-1952	.022-.47MF 10V
C133	380-1048	.68PF 500V
C134	300-2068	.0068UF 100V
VR1	374-0001	UA7805
SW1	325-1504	SPST, 4 POS
Y1	321-0012	8.0160 MHz

MNEM. LOC.	COORD. MAP
CNT	2 D 11
DIAGCLK	4 G 3
LHID0 - LHID7	1 A 8
ODID	1 C 1
DBPE	1 G 3
DBOD0 - DBOD7	1 C 1
DBOLW	1 G 3
DBOFF	1 C 1
DBPE	1 C 1
DIAG RD	4 G 10
DIAG WR	1 G 2
DONE	2 B 1
DRIVE SELECTED	2 B 3
ERWR	2 A 1
ETR	1 A 2
DIAG DATA	4 G 1
DIAGMODE	2 B 3
EBR	2 G 4
ECCE	4 E 1
DSRP	1 F 11
FF	2 D 11
FMT	1 F 11
FRCP	2 A 10
FRE	2 C 11
FREEZEOFF	1 A 10
HCE	2 G 1
HDRCLK	2 F 1
HDR DATA	2 B 1
HDRECCE	4 E 1
HDROUT	2 B 5
HT	2 F 1
HDSP	1 A 9
INRDY	1 G 3
INSTRB	1 D 1
IP	2 G 11
LSOF	2 D 11
MFM READ DATA +	3 G 2
MFM READ DATA -	3 G 2
MFM WRITE DATA+	3 E 1
MFM WRITE DATA-	3 E 1
INTOUT	1 F 1
ODD7	2 G 6
ODD4	4 G 3
ODD9	2 G 2
ODID	2 G 6
OUTRDY	1 G 2
XFER DATA	2 B 1
SOT	2 E 11
SYSR	2 B 11
TIMING CLOCK+	3 E 1
TIMING CLOCK-	3 E 1
WCE	1 C 1
WCRRD	2 G 6
WINBSY	2 E 11
WRCK	1 G 4
WR+DW	1 B 11
WR+LW+WRCK	1 G 1
WRGATE	2 F 1
WROP	3 G 11
XFER DATA	2 B 1
ΣA	2 C 11
ΣD	4 D 1

210 = 209+377 OR 378		
210	209	L93
7653-A	7653	378-4259

NOTE:
ALL RESISTORS UNLESS OTHERWISE SPECIFIED ARE 1/4W 5%

E-REV
11

REVISION	JB	JBB	SDG	BP	AR	AR	DHZ	JDC	JDC	JB	JEP	JEP	RDC	JDC	JEP	ENP	PGD	JSP	ENP	ENP
		11-20-81	1-20-81	3-9-81	3-9-81	3-9-81	3-27-81	4-10-81	4-10-81	6-29-81			9-15-81	11-6-81	11-19-81	4-7-82	5-7-82	9-15-82	2-24-83	2-24-83
ORG. REL. APP'D:	10																			
REVISED PER ECO#17902 APP'D:	2/1																			
ECO# 18318 APP'D:	3/1																			
REVISED PER ECO 18396 APP'D:	4/2																			
REVISED PER ECO 18479 APP'D:	5/3																			
REVISED PER ECO 18713 APP'D:	6/3																			
REVISED PER ECO # 18860 APP'D:	7/4																			
REVISED PER ECO # 18923 APP'D:	8/5																			
REVISED PER ECO # 19212 APP'D:	9/6																			
REVISED PER ECO # 19239 APP'D:	10/6																			
REVISED PER ECO # 19964 APP'D:	11/6																			
REVISED PER ECO # 20879 APP'D:	12/7																			
REVISED PER ECO'S 21002,21100 APP'D:	13/7																			
REVISED PER ECO # 22467 APP'D:	14/8																			
REVISED PER ECO# 23191 APP'D:	15/8																			
REVISED PER ECO# 23237 APP'D:	16/10																			
REVISED PER ECO# 23507 APP'D:	17/10																			
REVISED PER ECO# 25818 APP'D:	18/11																			

	BY	DATE	APPROVED BY	DATE
DWN	JB	10/22/80	E ENGR	11/24/82
CHK			M ENGR	
			MFG ENGR	

WANG LABORATORIES, INC. LOWELL, MASS. U.S.A.

MATERIAL	MODEL NO. 105/115	TITLE
	SEE ENGRG SPECIFICATIONS No.	DISK I/O "B"
FINISH	TOL EX AS NOTED .XX ± FRAC ± .XXX ± ANG ± FINISH	SEE CHART / D / 7653 / 18
	SCALE NONE / SHT 6 OF 6	WANG PART NUMBER / SIZE / DRAWING NUMBER / REV

THIS DRAWING AND THE DATA SHOWN THEREON ARE CONFIDENTIAL PROPERTY OF WANG LABORATORIES, INC. AND ARE PROPRIETARY TO WANG. ANY REPRODUCTION, DISCLOSURE OR USE OF THIS DRAWING OR THE DATA SHOWN THEREON WITHOUT THE WRITTEN PERMISSION OF WANG LABORATORIES, INC. IS EXPRESSLY PROHIBITED. ALL RIGHTS IN AND TO ANY PATENTS, COPYRIGHTS OR TRADE SECRETS ARISING FROM THE DRAWING OR DATA SHOWN THEREON ARE RESERVED BY WANG LABORATORIES.

COMPONENT	TYPE	W.L. PART NO
J1	12 PIN HEADER	654-1172
J2, 3	3 PIN HEADER	654-1196
J4	14 PIN SOCKET	516-9001
J5	2 PIN HEADER	654-1198
J6, 9, 10, 11, 12, 13, 24, 25	50 PIN CONN.	350-0011
J7, 8, 14, 15, 16, 17, 18, 19	43 PIN CONN	350-0021
J20, 22	44 PIN CONN.	350-0059

CONN. 1

CONN. 2

CONN. 3

7649-R2

CONN. 4

J13

J12

J11

J10

J9

J8

J7

J6

J19

J18

J17

J16

J15

J14

J22

J21

J30

J29

J28

J27

J26

J25

J24

J23

J20

J5

J3

J4

J2

+5VR
RESTART
FPL3
FPL4
SWDSA
SGN

+5VR
PWRLED
DSD
FPL1
DSU
FPL2
±0V

+5 REG
+5 REG
+24VR

+5VS
+24VUNREG
+24PR

+24FB
+24VS
+5PRI

FLOPPY CONN

ALIGNMENT KEY

FSPARE
FSWRT
FAULT2
SPDB
FHOLD
FSELECTOR
FDWP1
FTWREF
FSTEP
FDWRT
FDWRG/FRST
FHDIR
FHSTP

TAPE

CPU MEMORY

10 MEG FLOPPY CONTR

DISK CONTR 1

DISK CONTR 2

DATA LINE CONTR

DATA BUFFER

2200 SVP REGULATOR

F REV [U]

REVISION	BY	DATE	APPROVED
REVISED PER ECO M-1125		11/24/82	
REVISED PER ECO M-1125		11/24/82	
REVISED PER ECO M-1125		11/24/82	

"THIS DRAWING AND THE DATA SHOWN THEREON ARE THE CONFIDENTIAL PROPERTY OF AND ARE PROPRIETARY TO, WANG LABORATORIES, INC. THIS DRAWING AND THE DATA SHOWN THEREON MAY NOT BE MADE PUBLIC WITHOUT THE WRITTEN CONSENT OF WANG LABORATORIES, INC. IF FOR ANY REASON THIS OR ANYING IS PERMITTED BY WANG TO LEAVE THE PHYSICAL CUSTODY OF THE COMPANY, IT IS RETURNABLE UPON THE DEMAND OF WANG LABORATORIES, INC."

DO NOT SCALE

7649 MOTHERBOARD

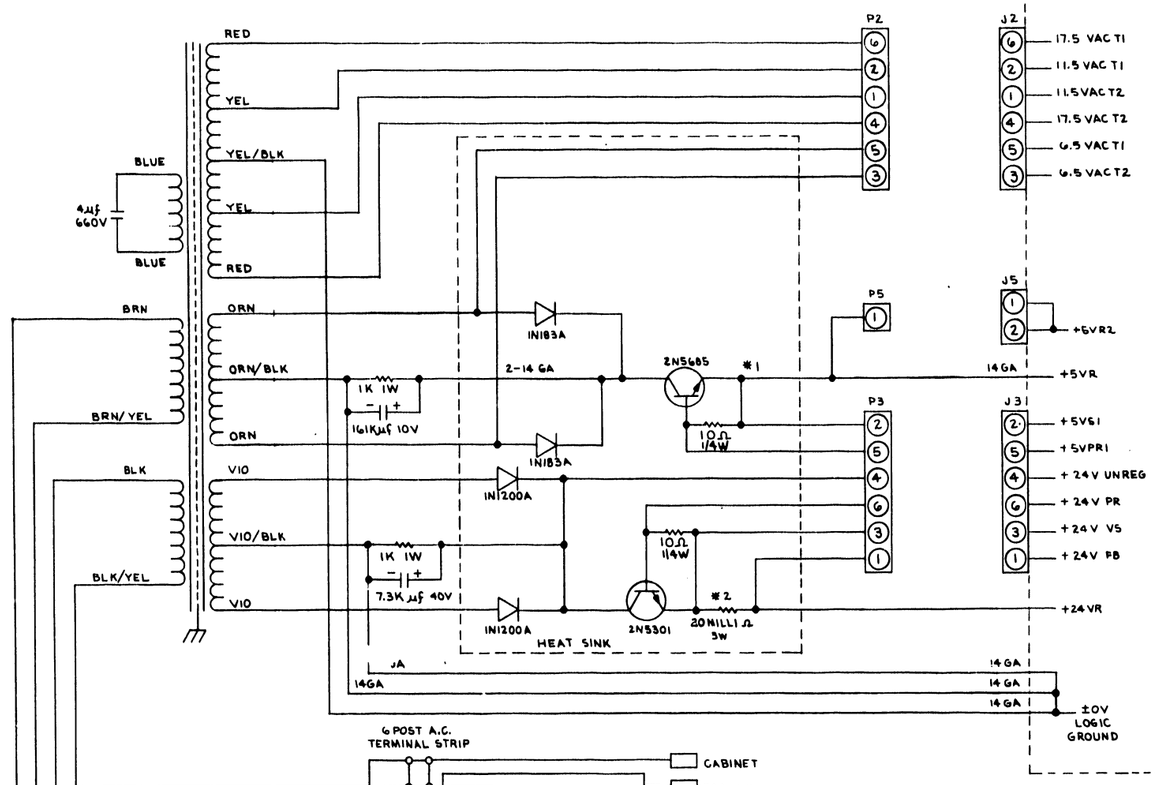

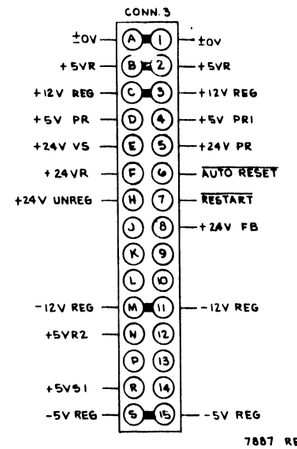

7887 REGULATOR CONNECTORS

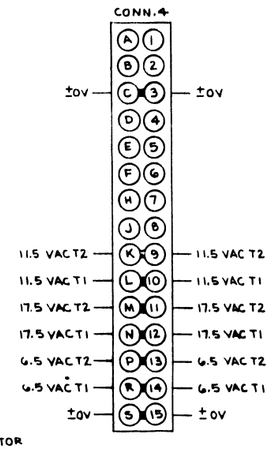

COMPONENT	TYPE	PART NO.
J2,3	6 POS. HEADER	654-1186
J5	2 POS. HEADER	654-1198
P2,3	6 POS. CONN.	654-1184
P5	2 POS. CONN.	654-1147

4. ▷ 654-2073
3. ALL WIRE IS 16GA., UNLESS OTHERWISE SPECIFIED.
2. SOLDER POINTS MUST BE 1.25 INCHES APART.
1. 14GA. 12.5 INCHES ±0.25 IN. MUST BE EXACT LENGTH.

*NOTES

NO.	REVISION	BY	DATE
0	ORIGINATED PER DWR #695 APP'D:		
1	REVISED PER ECO #2554 APP'D:		12-17-82
2	REVISED PER ECO #2774 APP'D: SEE SHT #3		5/11/83

WANG LABORATORIES, INC. LOWELL, MASS. U.S.A.

	BY	DATE	APPROVED BY	DATE
DWN	E.B.B.	10-23-80	E ENGR E. MANTELLO	11-26-80
CHK			M ENGR	
			MFG ENGR	

MATERIAL

MODEL NO. 125A/130A

SEE ENGRG SPECIFICATIONS

No.

FINISH

TOL EX AS NOTED
.XX ± FRAC ±
.XXX ± ANG. ±
FINISH √

SCALE — SHT 1 OF 1

TITLE: INTERCONNECTION DIAGRAM

D 7649-300 2

WANG PART NUMBER

D 7649-300

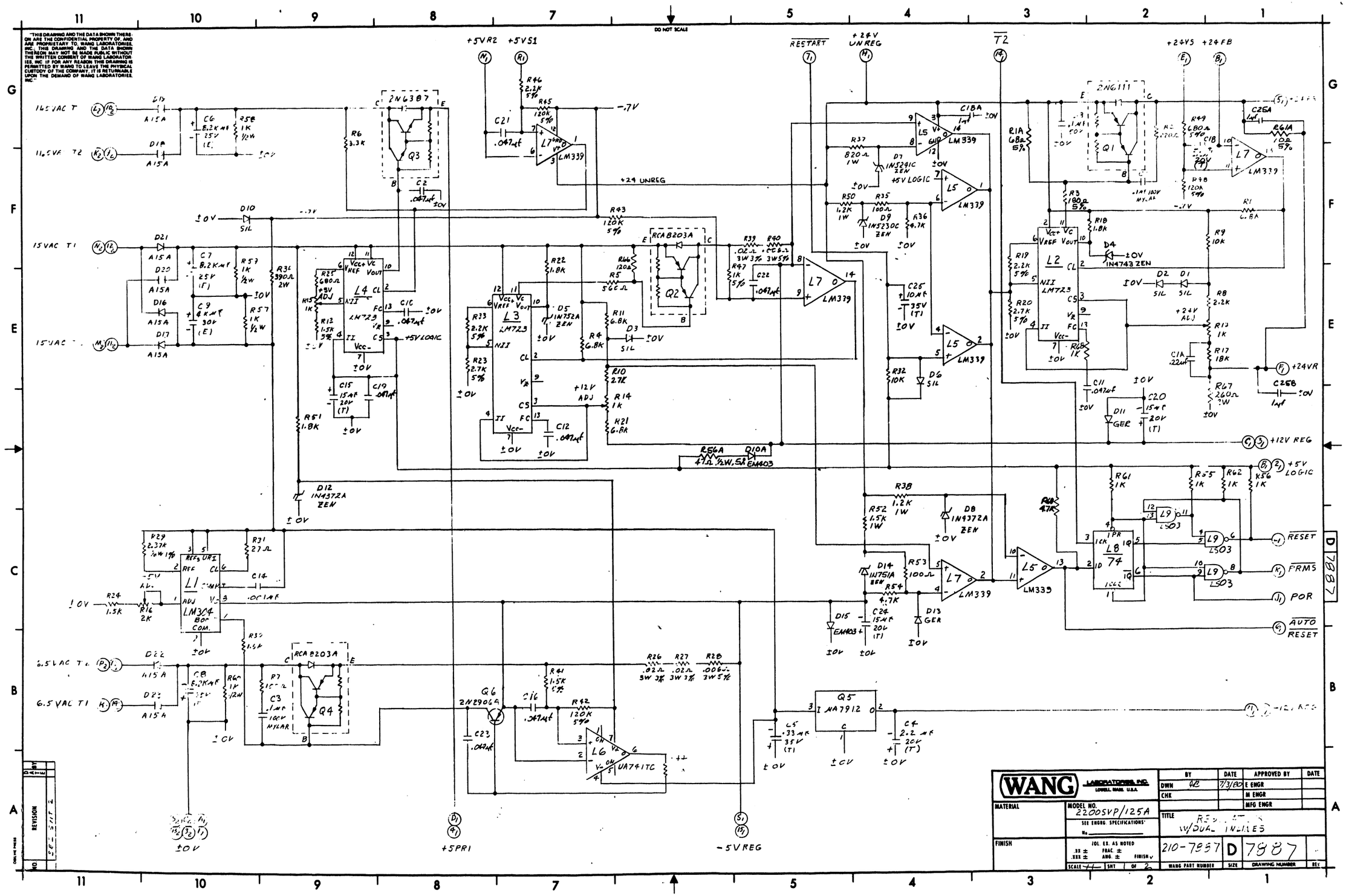

"THIS DRAWING AND THE DATA SHOWN THEREON ARE THE CONFIDENTIAL PROPERTY OF, AND ARE PROPRIETARY TO, WANG LABORATORIES, INC.; THIS DRAWING AND THE DATA SHOWN THEREON MAY NOT BE MADE PUBLIC WITHOUT THE WRITTEN CONSENT OF WANG LABORATORIES, INC. IF FOR ANY REASON THIS DRAWING IS PERMITTED BY WANG TO LEAVE THE PHYSICAL CUSTODY OF THE COMPANY, IT IS RETURNABLE UPON THE DEMAND OF WANG LABORATORIES, INC."
DO NOT SCALE
+5VR2
+5VS1
RESTART
+24V UNREG
T2
+24VS
+24FB
2N6387
2N6111
LM339
LM723
LM304
LM7Z3
RCA8203A
2N2906A
UA741TC
UA7912
LS03
LM74
+24 UNREG
+5V LOGIC
+24V ADJ
+12V ADJ
+24VR
+12V REG
+5V LOGIC
RESET
PRMS
POR
AUTO RESET
+5PRI
-5VREG
WANG LABORATORIES, INC. LOWELL, MASS. U.S.A.
MODEL NO. 2200SVP/125A
SEE ENGRG. SPECIFICATIONS
TITLE
W/DUAL INLINES
210-7887
D
7887
WANG PART NUMBER
SIZE
DRAWING NUMBER
REVISION

"THIS DRAWING AND THE DATA SHOWN THEREON ARE THE CONFIDENTIAL PROPERTY OF, AND ARE PROPRIETARY TO, WANG LABORATORIES, INC. THIS DRAWING AND THE DATA SHOWN THEREON MAY NOT BE MADE PUBLIC WITHOUT THE WRITTEN CONSENT OF WANG LABORATORIES, INC. IF FOR ANY REASON THIS DRAWING IS PERMITTED BY WANG TO LEAVE THE PHYSICAL CUSTODY OF THE COMPANY, IT IS RETURNABLE UPON THE DEMAND OF WANG LABORATORIES, INC."

DO NOT SCALE

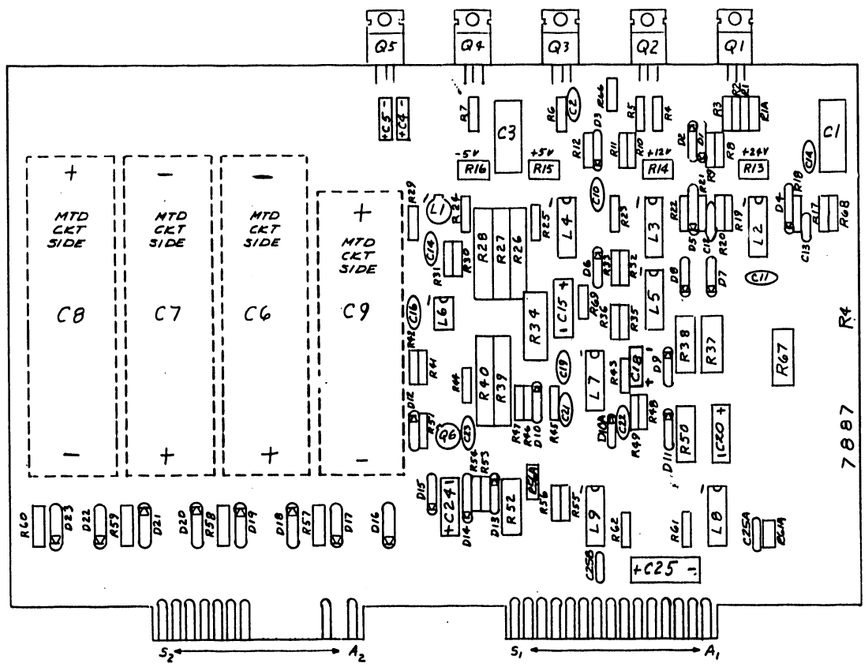

CONN 1

±0V	A 1	±0V
+5V LOGIC	B 2	+5V LOGIC
+12V REG	C 3	+12V REG
+5PR1	D 4	+5PR1
+24VS	E 5	+24PR
+24VR	F 6	AUTO RESET
+24 UNREG	H 7	RESTART
POR	J 8	+24FB
PRMS	K 9	
RESET	L 10	
-12V REG	M 11	-12V REG
+5VR2	N 12	
	P 13	
+5VS1	R 14	T2
-5V REG	S 15	-5V REG

CONN 2

	A 1	
	B 2	
±0V	C 3	±0V
	D 4	
	E 5	
	F 6	
	H 7	
	J 8	
11.5VAC T2	K 9	11.5VAC T2
11.5VAC T1	L 10	11.5VAC T1
115VAC T2	M 11	115VAC T2
15VAC T1	N 12	15VAC T1
6.5VAC T2	P 13	6.5VAC T2
6.5VAC T1	R 14	6.5VAC T1
±0V	S 15	±0V

COMPONENT	W.L. PART NO	TYPE
R1,4,11,21	330-3068	6.8K ¼W 10%
R2	330-2022	220Ω ¼W 10%
R55 TO 61,62,63	330-3010	1K ¼W 10%
R5	330-2056	560Ω ¼W 10%
R6	330-3033	3.3K ¼W 10%
R7,35,53	330-2010	100Ω ¼W 10%
R8	330-3022	2.2K ¼W 10%
R9,32	330-4010	10K ½W 10%
R10	330-3027	2.7K ¼W 10%
R29,27	330-3015	1.5K ¼W 10%
R13,14,15	336-1001	1K POT
R16	336-1026	2K POT
R17	330-4018	18K ½W 10%
R18,22,51	330-3018	1.8K ¼W 10%
R19,33,46	330-3023	2.2K ¼W 5%
R20,23	330-3028	2.7K ¼W 5%
R25	330-2068	680Ω ¼W 10%
R26,27,39	334-0032	.022Ω 3W 3%
R29	333-0093	2.37K ½W 1%
R31	330-1027	27Ω ¼W 10%
R34	337-2039	390Ω 2W 10%
R36,54,60	330-3047	4.7K ¼W 10%
R37	332-2082	820Ω 1W 10%
R38,50	332-3012	1.2K 1W 10%
R28,40	334-0031	.006Ω 3W 5%
R41,42	330-3016	1.5K ¼W 5%
R43,43,45,48	330-5013	120K ¼W 5%
R44	330-4033	33K ½W 10%
R47	330-3011	1K ¼W 5%
R49	336-2069	680Ω ¼W 5%
R52	332-3015	1.5K 1% 10%
R57-60	331-3010	1K ½W 10%
R67	337-2056	560Ω 2W, 10%
R66	330-2012	120Ω ¼W 10%
R3	330-2019	180Ω ½W 5%
C1A	300-1926	.22μF 100V
C1,3	300-2210	.1μF 100V MYLAR
C2,10-12,16, 19,21,22,23	300-1966	.047μF 50V
C4,18	300-4014	2.2μF 20V (T)
C5	300-4008	.33μF 35V (T)
C6,7,8	300-3078	8.2KμF 25V (E)
C9	300-3080	4K μF 30V (E)
C13	300-1930	.1μF 50V
C14	300-1906	.001μF 500V
C15,20,24	300-4022	15μF 20V (T)
C25A,25B,18A	300-1931	1μF 50V(HF)
C25	300-4032	10μF 35V (T)
D1,2,3,6,16,	380-1001	DO35 SIL
D4	380-2113	IN4743 13V
D5	380-2056	IN752A 5.6V
D7	380-2111	IN5241C 11V
D8,12	380-2129	IN4372A 2.7
D9	380-2048	IN5230C 4.7V
D11,13	380-0001	.5A
D16-23	380-3008	A1FA
D14	380-2051	IN751A
D10A,15	380-4000	EM403
Q2,4	375-1053	RCA 8203A
Q3	375-1052	2N6387
Q5	374-0003	UA7912
Q6	375-1017	2N2906A
Q1	375-1034	2N6111
R56A	331-1048	47Ω 4W 5%
R1A	330-1069	68Ω ¼W 5%
R61A	330-1011	10Ω ¼W 5%

I.C. LOC	W.L PART NO	TYPE
L1	376-0134	LM304
L2,3,4	376-0478	LM723
L5,7	376-0240	LM339
L6	376-0423	UA741TC
L8	376-0006	7474
L9	376-0224	74LS03

I.C. TYPE	LOC	SPARES
74LS03	L9	1
7474	L8	1

MNEMONICS	CONN'D
AUTO RESET	1P1
POR	1G1
PRMS	1G1
RESET	1C1
RESTART	1P1
T2	1G3
6.3VAC T1	1F11
6.5VAC T2	1B11
11.5VAC T1	1G11
11.5VAC T2	1F11
15 VAC T1	1F11
15 VAC T2	1F11
+5PR1	1A3
+5VLOGIC	1C1
+5VR2	1G9
+5VS1	1G7
-5V REG	1A5
+12VREG	1D1
-12VREG	1B1
+24PR	1G1
+24FB	1G1
+24V UNREG	1G4
+24VS	1G2
+24VR	1E1
±0V	1A10

E-REV 7

NO.	REVISION	DRAWN	CHK	APP'D	DATE
0	OPS REL SWR = E.9 APL = 11Hawaii	JEP			10-19-81
1	REVISED PER ECO# 17130 APP'D: Hawaii	JEP	T.K.		1-22-81
2	REVISED PER ECO# 17428 APP'D:	T.K.			1-23-81
3	REVISED PER ECO# 17785 APP'D: UH Hawaii	P.B.P.			3-5-81
4	REVISED PER ECO# 3400 APP'D: UH Jan-17				5-15-81
5	REVISED PER ECO# UH Jan-17 APP'D:	D.H.			6-18-81
6	REVISED PER ECO# 21550 APP'D: UH Hawaii	KM'P			2/26/82
7	REVISED PER ECO# 23620 APP'D: UH Hawaii	KM'P			2/26/82
8	REVISED PER FROM 3102 ADDED D.T.C. SOCKET	PSD			5-20-82
9	REVISED PER ECO# 23621 APP'D: QTC COOK	KM'P			6/28/82

	BY	DATE	APPROVED BY	DATE
DWN	PE	7/1/81	E ENGR	11/4/81
CHK	[illegible]	6/10/81	M ENGR	
			MFG ENGR	

WANG LABORATORIES, INC. LOWELL, MASS. U.S.A.

MATERIAL

MODEL NO. 2200SVP/125A
SEE ENGRG. SPECIFICATIONS
No.

FINISH

TOL. EX. AS NOTED
.XX ± FRAC. ±
.XXX ± ANG. ±
FINISH
SCALE NA SHT 2 OF 2

TITLE REGULATOR W/DUAL INLINES

210-7887 WANG PART NUMBER | D SIZE | 7887 DRAWING NUMBER | REV

7887

"THIS DRAWING AND THE DATA SHOWN THEREON ARE THE CONFIDENTIAL PROPERTY OF, AND ARE PROPRIETARY TO, WANG LABORATORIES, INC. THIS DRAWING AND THE DATA SHOWN THEREON MAY NOT BE MADE PUBLIC WITHOUT THE WRITTEN CONSENT OF WANG LABORATORIES, INC. IF FOR ANY REASON THIS DRAWING IS PERMITTED BY WANG TO LEAVE THE PHYSICAL CUSTODY OF THE COMPANY, IT IS RETURNABLE UPON THE DEMAND OF WANG LABORATORIES, INC."

DO NOT SCALE

MASKABLE INTERRUPT CONTROL LOGIC

PARITY GENERATOR/ CHECKER LOGIC

WANG LABORATORIES, INC. LOWELL, MASS. U.S.A.	BY	DATE	APPROVED BY	DATE
MATERIAL —	DWN RD	11/28/83	E ENGR	
MODEL NO. —	CHK		M ENGR	
SEE ENGRG SPECIFICATIONS No. —			MFG ENGR	
FINISH —	TITLE: CPU/MEMORY			
TOL EX. AS NOTED XX ± — FRAC ± — XXX ± — ANG. ± — FINISH √	SEE CHART	D	7684	1r
SCALE — SHT / OF	WANG PART NUMBER	SIZE	DRAWING NUMBER	REV.

NO.	REVISION	DATE	BY
6	SEE SHT 5		

D 7684

"THIS DRAWING AND THE DATA SHOWN THEREON ARE THE CONFIDENTIAL PROPERTY OF, AND ARE PROPRIETARY TO, WANG LABORATORIES, INC. THIS DRAWING AND THE DATA SHOWN THEREON MAY NOT BE MADE PUBLIC WITHOUT THE WRITTEN CONSENT OF WANG LABORATORIES, INC. IF FOR ANY REASON THIS DRAWING IS PERMITTED BY WANG TO LEAVE THE PHYSICAL CUSTODY OF THE COMPANY, IT IS RETURNABLE UPON THE DEMAND OF WANG LABORATORIES, INC."

DO NOT SCALE

MTD EXTERNAL DISK POINTER SWITCH

CPU LEDS

DIAGNOSTIC SWITCHES

DIAGNOSTIC PUSH BUTTON

BY	DATE	APPROVED BY	DATE
DWN ZD	11/26/81	E ENGR	
CHK		M ENGR	
		MFG ENGR	

WANG LABORATORIES, INC. LOWELL, MASS. U.S.A.

MATERIAL — MODEL NO. — SEE ENGRG SPECIFICATIONS — No.

FINISH — TOL EX AS NOTED .XX ± — FRAC ± — .XXX ± — ANG ± — FINISH √

TITLE: CPU / MEMORY

SCALE — SHT — OF — | SEE CHART | D | 7037 | T

WANG PART NUMBER | SIZE | DRAWING NUMBER | REV

NO.	REVISION	BY	DATE
	SEE SHT 5		

"THIS DRAWING AND THE DATA SHOWN THERE ON ARE THE CONFIDENTIAL PROPERTY OF, AND ARE PROPRIETARY TO WANG LABORATORIES, INC. THIS DRAWING AND THE DATA SHOWN THEREON MAY NOT BE MADE PUBLIC WITHOUT THE WRITTEN CONSENT OF WANG LABORATORIES, INC. IF FOR ANY REASON THIS DRAWING IS PERMITTED BY WANG TO LEAVE THE PHYSICAL CUSTODY OF THIS COMPANY, IT IS RETURNABLE UPON THE DEMAND OF WANG LABORATORIES, INC."

DO NOT SCALE

RESTART
SW8
±0V
R48 2.2K
R55 2.2K
+5VR
L80 10
L59 08
ME (D1)
R45 2.2K
RG9 10K
C114 150PF
L95 9602 CLR1
CBUSAD (J1)
CBUSRQ (J2)
R70 2.2K
R113 2.2K
L96 03
L101 08
600NS
(4) MEZS*
(6) NMI*
R71 2.2K

Y1 15.9744 MHz
R121 330Ω
R122 330Ω
R107 2.2K
R106 2.2K
TP4
TP2
L117 HO4
C121 680PF
L118 S00
L120 S08
L129 37
TP3
R127 2.2K
R105 2.2K
R108 2.2K
C150 18PF
R123 1K
R124 33Ω 5%
Q1 SPS6551
R125 330Ω
R126 12Ω
R129 2.2K

M1 (4C2)
RD (4B2)
IORQ (4C2)
L102 S04
RD (1F7) (5C6)
L79 04
L90 32
L101 08
BK2 (3D5)
M1 (2F2)
BK8 (5F2)
L101 08
L120 S08
2.7 220PF
±Z S.P. (2B5)
±Z
ΦA (2C4)
ΦZ (2A7) (2F3)
ΦZ (2B1)
L119 S74
L128 S74
L129 S74
2PR 2D 2Q 2CK 2CLR
1PR 1D 1Q 1CK 1CLR

L100 CTC Z80A
GND VCC
RD IORQ IEI M1 Φ CE RESET CS0 CS1 CK/TR0 CK/TR1 CK/TR2 CK/TR3 ZC/TO0 ZC/TO1 ZC/TO2 IEO INT
D0 D1 D2 D3 D4 D5 D6 D7
A0 A1
±0V +5VR
BK1 (5F1)
BK3 (1C4)
R99 10K
IEO (1G7)
INT
BK2 (3F7)
D0-D7 (4E5)

1=A TO B
0=B TO A
LS245
A1 A2 A3 A4 A5 A6 A7 A8
B1 B2 B3 B4 B5 B6 B7 B8
DIR
R80 2.2K
R84 2.2K
R81 2.2K
R85 2.2K
R82 2.2K
R86 2.2K
R83 2.2K
R87 2.2K

L99 Z80A CPU
BUSRQ NMI D0 D1 D2 D3 D4 D5 D6 D7 WAIT INT RESET Φ
A0 A1 A2 A3 A4 A5 A6 A7 A8 A9 A10 A11 A12 A13 A14 A15 M1 HALT RFSH WR RD IORQ MREQ BUSAK
M1 (4D5)
RFSH (4D5)
WR (4D5)
RD (4D5)
IORQ (4D5)
MREQ (4D5)
BK6 (4D2)
L116 04
BUSAK (4C4) (5F2)
BUSAK
A0-A15 (2C11)
A0-A11 (5G1D)

ZA0 ZA1 ZA2 ZA3 ZA4 ZA5 ZA6 ZA7 ZA8 ZA9 ZA10 ZA11 ZA12 ZA13 ZA14 ZA15
L98 1A1 1A2 1A3 1A4 2A1 2A2 2A3 2A4 1Y1 1Y2 1Y3 1Y4 2Y1 2Y2 2Y3 2Y4 1G 2G
LS244
L97 1D 2D 3D 4D 5D 6D 7D 8D 0C ENB
LS373
A15 A14 A13 A12 A11 A10 A9 A8

WAIT (E4)
+5VR R54 2.2K
R100 390Ω
ALTO FAST (1B)
L79 04
ALTO RESET (2G10)
L103 S11
L102 S04
MREQ (4C2)
MREQ (1D6) (2D2)
L104 S74
2PR 2D 2Q 2CK 2CLR
1PR 1D 1Q 1CK 1CLR
R101 2.2K
R102 2.2K
MMIO (5C6)
L76 S02
MMI/OWAIT
MIWAIT
RFSH (4B2)
L59 08
ΦZC
DEVO (5E5)
L120 S08
R98 10K
C115 3.3μF 20V(TT)
L75 9602 CLR2
DCO8 (5E3)
10MS
L94 08
L77 125
MR (1G4) (2C11) (2E1) (1G11)
MR

(M4) ½ΦC
(K4) ΦC
(L4) ΦAC

REVISION	BY	DATE	APPROVED BY	DATE
SAI SHT 9	DWN RD	11/29/80	E ENGR	
	CHK		M ENGR	
			MFG ENGR	

WANG LABORATORIES, INC. LOWELL, MASS. U.S.A.

MATERIAL — MODEL NO. SEE ENGRG SPECIFICATIONS No.

FINISH — TOL ES AS NOTED .XX ± .XXX ± FRAC ± ANG ± FINISH √

TITLE CPU/MEMORY

SCALE — SHT 3 OF 9 — WANG PART NUMBER SEE CHART — SIZE D — DRAWING NUMBER 7684 — REV .1

7684.1

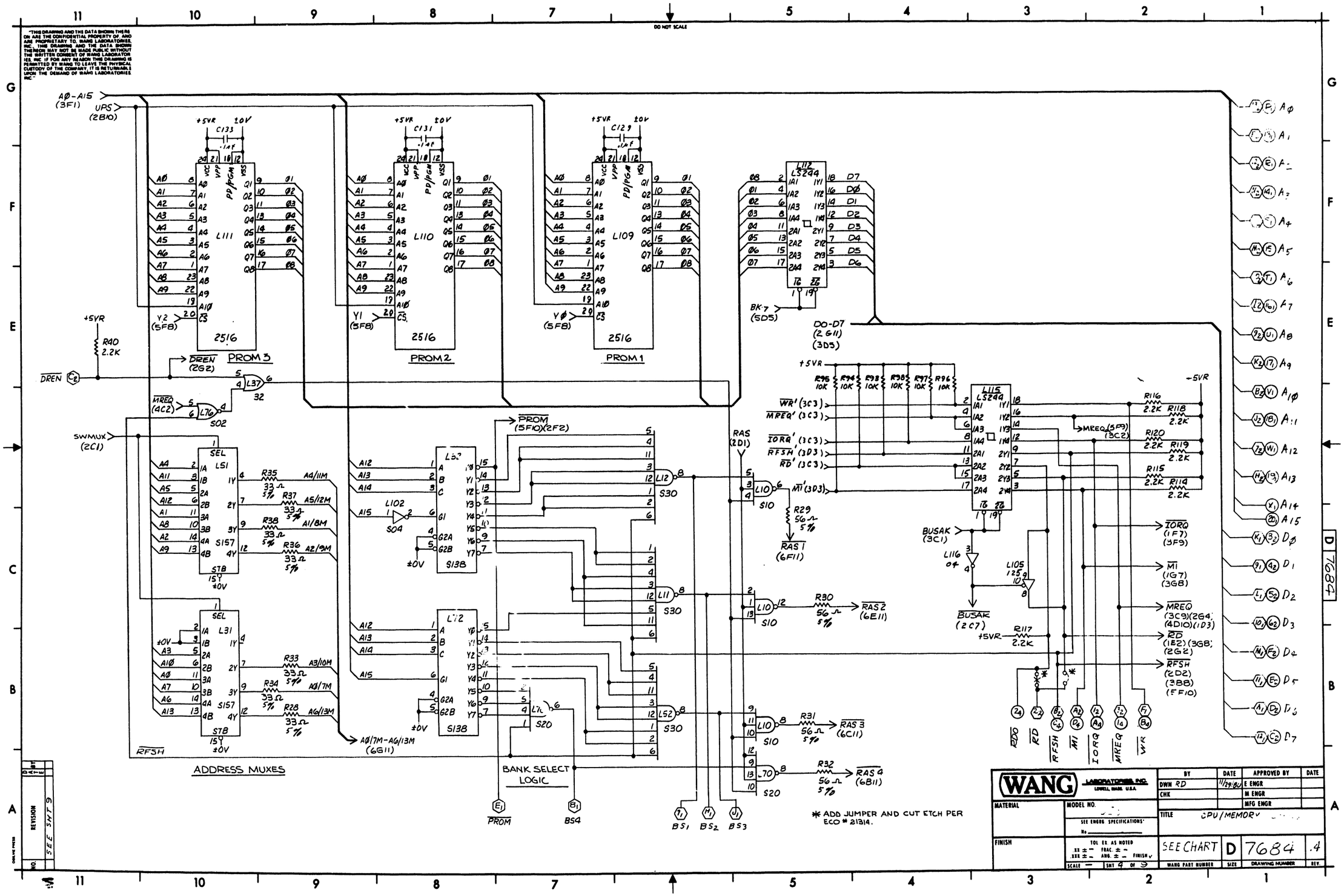

"THIS DRAWING AND THE DATA SHOWN THEREON ARE THE CONFIDENTIAL PROPERTY OF, AND ARE PROPRIETARY TO, WANG LABORATORIES, INC. THIS DRAWING AND THE DATA SHOWN THEREON MAY NOT BE MADE PUBLIC WITHOUT THE WRITTEN CONSENT OF WANG LABORATORIES, INC. IF FOR ANY REASON THIS DRAWING IS PERMITTED BY WANG TO LEAVE THE PHYSICAL CUSTODY OF THE COMPANY, IT IS RETURNABLE UPON THE DEMAND OF WANG LABORATORIES, INC."
DO NOT SCALE
A0-A15 (3F1)
UPS (2B10)
PROM 3
PROM 2
PROM 1
2516
L111
L110
L109
L112 LS244
L115 LS244
DREN (2G2)
MREQ (4C2)
SWMUX (2C1)
L51 S157
L31 S157
L52 S138
L72 S138
L102 S04
PROM (5F10)(2F2)
RAS (2D1)
RAS 1 (6F11)
RAS 2 (6E11)
RAS 3 (6C11)
RAS 4 (6B11)
BUSAK (3C1)
BUSAK (2C7)
BK-7 (5D5)
D0-D7 (2G11) (3D5)
IORQ (1F7) (3F9)
MI (1G7) (3G8)
MREQ (3C9)(2G4) (4D10)(1D3)
RD (1E2)(3G8) (2G2)
RFSH (2D2) (3B8) (5F10)
ADDRESS MUXES
BANK SELECT LOGIC
PROM
BS4
BS1 BS2 BS3
* ADD JUMPER AND CUT ETCH PER ECO # 21314.
WANG LABORATORIES, INC. LOWELL, MASS. U.S.A.
DWN RD 11/29/80
CHK
E ENGR
M ENGR
MFG ENGR
MATERIAL
MODEL NO.
SEE ENGRG SPECIFICATIONS
FINISH
TOL EX. AS NOTED
SCALE
SHT 4 OF 9
TITLE CPU/MEMORY
SEE CHART
D 7684 .4
WANG PART NUMBER
SIZE
DRAWING NUMBER
REV.
REVISION
SEE SHT 9

"THIS DRAWING AND THE DATA SHOWN THEREON ARE THE CONFIDENTIAL PROPERTY OF, AND ARE PROPRIETARY TO, WANG LABORATORIES, INC. THIS DRAWING AND THE DATA SHOWN THEREON MAY NOT BE MADE PUBLIC WITHOUT THE WRITTEN CONSENT OF WANG LABORATORIES, INC. IF FOR ANY REASON THIS DRAWING IS PERMITTED BY WANG TO LEAVE THE PHYSICAL CUSTODY OF THE COMPANY, IT IS RETURNABLE UPON THE DEMAND OF WANG LABORATORIES, INC."

DO NOT SCALE

A0-A11 (3F1)

PROM DECODER

L124 S138

A10 A11 ±0V

Y0 (4E7) Y1 (4E9) Y2 (4E10)

L116 04

RFSH (4B2)

BK6 (4D2)

PROM (4D7)

PROM (1E2) (2F1)

L90 32

+5VR

R44 2.2K

A4 A5 CRQAK (2A4)

L56 25

L57 04

+5VR

R39 2.2K

A9 A8 A7 A6

L36 25

DEVO (3AB)

L57 04

L58 154

A0 A1 A2 A3

G1 G2

$\overline{OCO0}$ $\overline{OCO1}$ $\overline{OCO2}$ $\overline{OCO3}$

L39 20

$\overline{OCO4}$ (2G7)

$\overline{OCO5}$ (1B5)

$\overline{OCO6}$ (1C1)

$\overline{OCO7}$ (1E5)

$\overline{OCO8}$ (3B6) $\overline{OCO9}$ (1G2) $\overline{OCOA}$ (1F4) $\overline{OCOB}$ (2B11) $\overline{OCOC}$ (2C7) $\overline{OCOD}$ (2G10) $\overline{OCOE}$ (1C1)

BK5 (3F5)

L79 04

L59 08

BUSAK (3C1)

L60 25

+5VR

R46 2.2K

L38 04

BK8 (3F7)

BK1 (3F5)

L57 04

L139 37

$\overline{SET\ INT}$ (1F10)

CPU MEMORY MAPPED I/O DECODER

CRQAK (2C5)

L126 S20

BK7 (4E5)

RD (3G6)

$\overline{MMI/O}$ (3C6)

$\overline{DLMMI/O}$

$\overline{MMI/O}$

SEE SHEET 9

REVISION	BY	DATE	APPROVED BY	DATE
	DWN RD	11/29/80	E ENGR	
	CHK		M ENGR	
			MFG ENGR	

WANG LABORATORIES, INC. LOWELL, MASS. U.S.A.

MATERIAL

MODEL NO. [illegible]

SEE ENGRG SPECIFICATIONS No.

TITLE CPU/MEMORY [illegible]

FINISH

TOL ER. AS NOTED .XX ± — FRAC ± — .XXX ± — ANG. ± — FINISH √

SCALE — SHT 5 OF 9

SEE CHART. | D | 7684 | .4

WANG PART NUMBER | SIZE | DRAWING NUMBER | REV

D 7684

"THIS DRAWING AND THE DATA SHOWN THEREON ARE THE CONFIDENTIAL PROPERTY OF, AND ARE PROPRIETARY TO, WANG LABORATORIES, INC. THIS DRAWING AND THE DATA SHOWN THEREON MAY NOT BE MADE PUBLIC WITHOUT THE WRITTEN CONSENT OF WANG LABORATORIES, INC. IF FOR ANY REASON THIS DRAWING IS PERMITTED BY WANG TO LEAVE THE PHYSICAL CUSTODY OF THE COMPANY, IT IS RETURNABLE UPON THE DEMAND OF WANG LABORATORIES, INC."

DO NOT SCALE

D0MI-D8MI (2E4)

A0/7M-A6/13M (4B9)

RAS1 (4C5)

CAS (2A1)

WRITE (2C1)

RAS2 (4C4)

RAS3 (4B4)

RAS4 (4A4)

D0MI

D1MI

D2MI

D3MI

D4MI

D5MI

D6MI

D7MI

D8MI

-5VR +5VR +12V

C27 15UF 20V(T) ±0V

C28 15UF 20V(T) ±0V

C39 15UF 20V(T) ±0V

C40 15UF 20V(T) ±0V

C63 15UF 20V(T) ±0V

C64 15UF 20V(T) ±0V

C76 15UF 20V(T) ±0V

C77 15UF 20V(T) ±0V

C16 ±0V

.1uF ±0V

MK4116

L9 L1 L2 L3 L4 L5 L6 L7 L8

L30 L22 L23 L24 L25 L26 L27 L28 L29

L50 L42 L43 L44 L45 L46 L47 L48 L49

L69 L61 L62 L63 L64 L65 L66 L67 L68

D0MO D7MO D6MO D5MO D4MO D3MO D2MO D1MO D0MO

D0MO-D8MO (2E5)

REVISION	BY	DATE
SEE SHT 5		

WANG LABORATORIES, INC. LOWELL, MASS. U.S.A.

	BY	DATE	APPROVED BY	DATE
DWN	JP	11/23/82	E ENGR	
CHK			M ENGR	
			MFG ENGR	

MATERIAL

MODEL NO.

SEE ENGRG. SPECIFICATIONS No.

FINISH

TOL. EX. AS NOTED
XX ± FRAC ±
XXX ± ANG ± FINISH √

TITLE CPU/MEMORY (...)

SEE CHART | D | 7684 | -1

SCALE SHT 6 OF 9 | WANG PART NUMBER | SIZE | DRAWING NUMBER | REV.

D 7684

THIS DRAWING AND THE DATA SHOWN THEREON ARE THE CONFIDENTIAL PROPERTY OF AND ARE PROPRIETARY TO WANG LABORATORIES INC. THIS DRAWING AND THE DATA SHOWN THEREON MAY NOT BE MADE PUBLIC WITHOUT THE WRITTEN CONSENT OF WANG LABORATORIES INC. IF FOR ANY REASON THIS DRAWING IS PERMITTED BY WANG TO LEAVE THE PHYSICAL CUSTODY OF THE COMPANY IT IS RETURNABLE UPON THE DEMAND OF WANG LABORATORIES INC.

SWITCHES SW3-SW0 MOUNT ON FAR SIDE

DO NOT SCALE

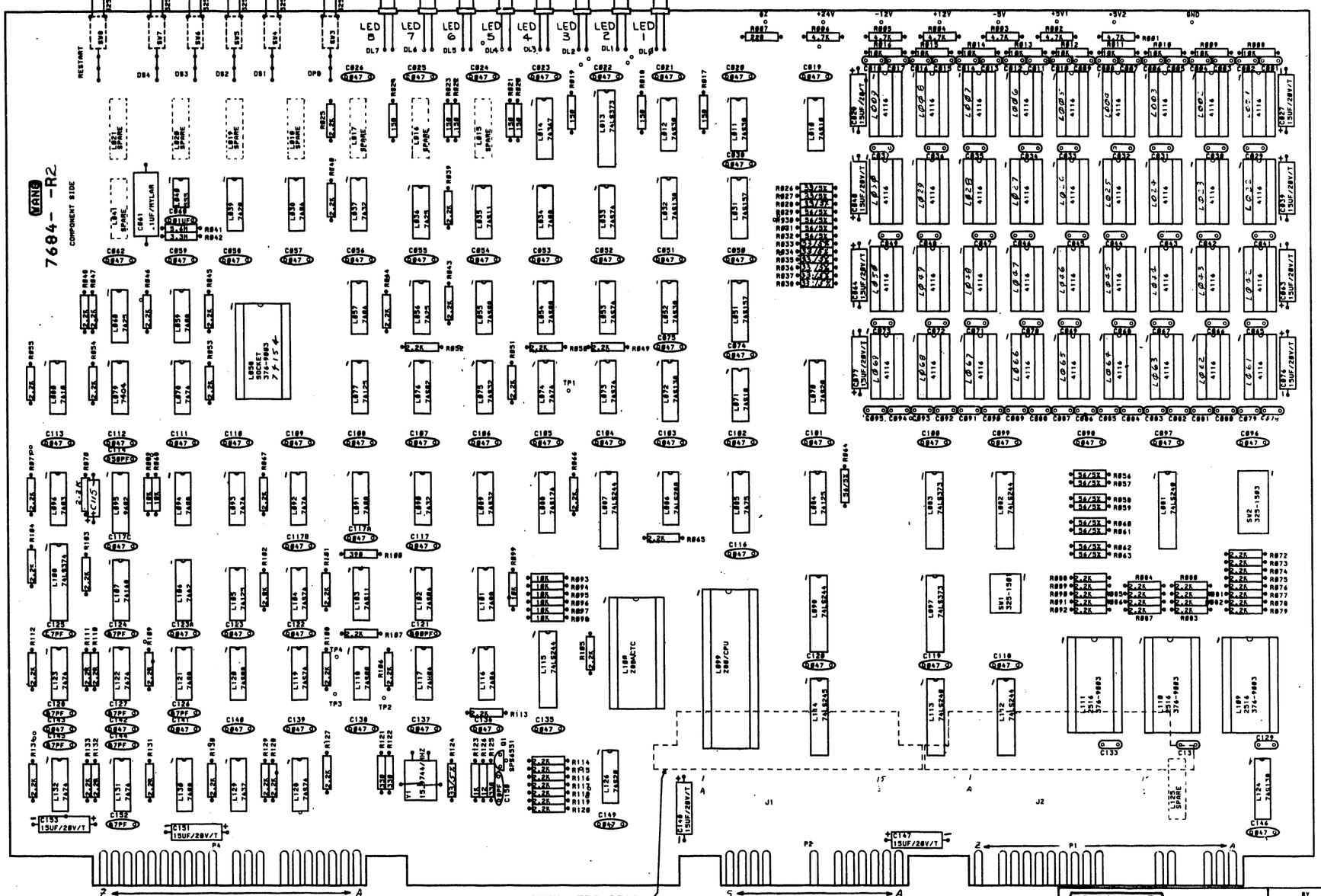

CONN. 350-0009
2 PLACES
MOUNT FAR SIDE

REVISION	BY	DATE
SEE SHT 9		

	BY	DATE	APPROVED BY	DATE
DWN	[illegible]	2-11-81	E ENGR	
CHK			M ENGR	
			MFG ENGR	

WANG LABORATORIES, INC. LOWELL MASS U.S.A.

MATERIAL	
FINISH	
MODEL NO	OIS
SEE ENGRG SPECIFICATIONS	No.
TOL ±.X AS NOTED .XX ± .XXX ± ANG ± FINISH	
SCALE NONE	SHT 7 OF 9
TITLE	CPU / MEMORY (64K)
SEE CHART	D	7684	.4
WANG PART NUMBER	SIZE	DRAWING NUMBER	REV

D 7684

"THIS DRAWING AND THE DATA SHOWN THEREON ARE THE CONFIDENTIAL PROPERTY OF, AND ARE PROPRIETARY TO, WANG LABORATORIES, INC. THIS DRAWING AND THE DATA SHOWN THEREON MAY NOT BE MADE PUBLIC WITHOUT THE WRITTEN CONSENT OF WANG LABORATORIES, INC. IF FOR ANY REASON THIS DRAWING IS PERMITTED BY WANG TO LEAVE THE PHYSICAL CUSTODY OF THE COMPANY, IT IS RETURNABLE UPON THE DEMAND OF WANG LABORATORIES, INC."

DO NOT SCALE

210 = 209 + 377 OR 378

210	209	L1-9, 23-30, 42-50, 61-69	L109	L99	L100	L110	L111
7684-A	7684	377-0345	378-5001-R6	377-0368	377-0371	378-5002-R3	378-5003-R3

NO.	REVISION	BY	DATE
	SEE SHT 9		

	BY	DATE	APPROVED BY	DATE
	DWN JEP	6/82	E ENGR	
	CHK		M ENGR	
			MFG ENGR	

WANG LABORATORIES, INC. LOWELL, MASS. U.S.A.

MATERIAL

MODEL NO. [illegible]

SEE ENGRG SPECIFICATIONS No.

FINISH

TOL. EX. AS NOTED
XX ± FRAC ±
XXX ± ANG. ± FINISH √

TITLE CPU [illegible]

SCALE — SHT 8 OF 9

WANG PART NUMBER	SIZE	DRAWING NUMBER	REV.
SEE CHART	D	7684	A

"THIS DRAWING AND THE DATA SHOWN THEREON ARE THE CONFIDENTIAL PROPERTY OF, AND ARE PROPRIETARY TO, WANG LABORATORIES, INC. THIS DRAWING AND THE DATA SHOWN THEREON MAY NOT BE MADE PUBLIC WITHOUT THE WRITTEN CONSENT OF WANG LABORATORIES, INC. IF FOR ANY REASON THIS DRAWING IS PERMITTED BY WANG TO LEAVE THE PHYSICAL CUSTODY OF THE COMPANY, IT IS RETURNABLE UPON THE DEMAND OF WANG LABORATORIES, INC."

DO NOT SCALE

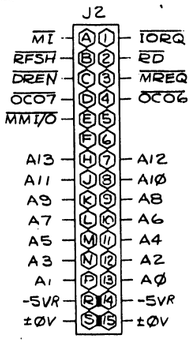

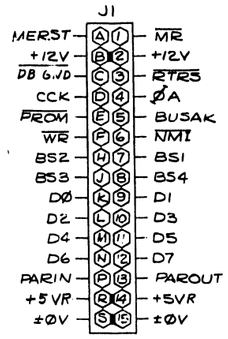

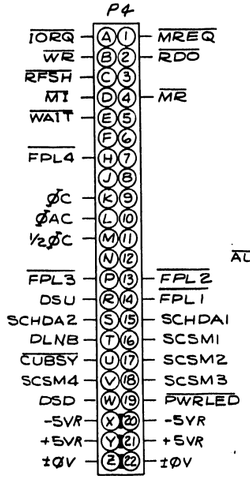

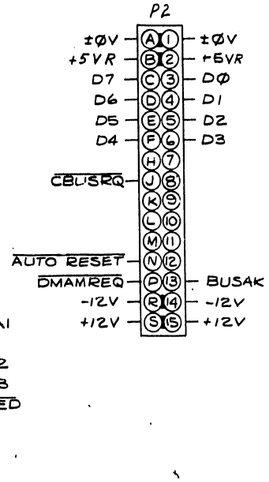

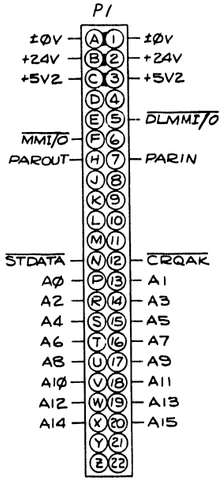

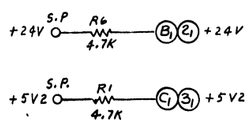

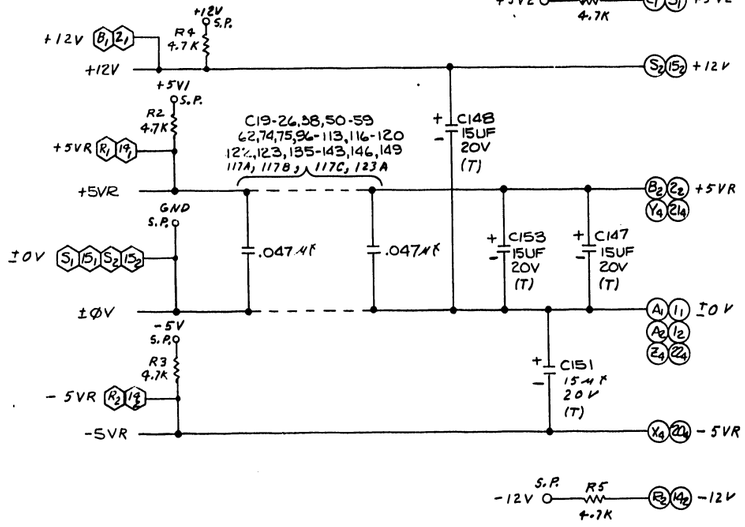

I.C. LOCATION	W.L. PART NO	TYPE
L1-9,22-30,42-50,61-69	SEE CHART	MK4116
L10,71	376-0238	74S10
L11,12,52	376-0198	74S30
L13,83,97	376-0310	74LS373
L14	376-0176	74367
L15-21,41,125		SPARE
L31,51	376-0217	74S157
L32,72,124	376-0298	74S138
L33,53,73,104,119,128	376-0202	74S74
L34,54,91,94,101,121,130	376-0081	7408
L35,103	376-0237	7411
L36,56,60	376-0092	7425
L37,90	376-0093	7432
L38,57,116	376-0010	7404
L39	376-0004	7420
L40	376-0126	555
L54,55,120	376-0200	74S08
L58	376-0090	74154
L70,126	376-0230	74S20
L74,78,92,93,122,123,131,132	376-0006	7474
L75,89	376-0205	74S32
L76	376-0199	74S02
L77,84,105	376-0324	74125
L79	376-0010	7404
L80	376-0003	7410
L81,113	376-0297	74LS240
L82,87,98,112,115	376-0288	74LS244
L86	376-0242	74LS280
L88	376-0247	74S174
L95	376-0104	9602
L96	376-0028	7403
L99	SEE CHART	Z80A-CPU
L100	SEE CHART	Z80-CTC
L102	376-0197	74S04
L106	376-0008	7442
L107	376-0171	74148
L108	376-0286	74LS374
L109-111	SEE CHART	2516
L114	376-0285	74LS245
L117	376-0043	74H04
L118	376-0228	74S00
L129	376-0068	7437
L85	376-0013	7475
L1-9,22-30,42-50,61-69	376-9002	SKT, 16 PIN
L99	376-9011	SKT, 40 PIN
L100	376-9015	SKT, 28 PIN
L58,109-111	376-9003	SKT, 24 PIN

I.C. TYPE	LOC	SPARES
74S00	L118	1
7403	L96	3
7404	L38	1
	L116	1
74S04	L102	2
7408	L34	1
	L59	1
74S08	L54	2
	L120	1
74S10	L71	1
74S11	L35	1
	L103	1
7420	L39	1
7425	L36	1
7432	L37	2
74S32	L89	2
7474	L78	1
74S74	L33	1
	L128	1
7475	L85	1
74125	L77	1
	L84	1
	L105	1

COMPONENT	W.L. PART No.	TYPE
R1-6	330-3048	4.7K ¼W 5%
R7	330-2023	220Ω ¼W 5%
R8-16,68,69,93-99	330-4011	10K ¼W 5%
R17-24	330-2016	150Ω ¼W 5%
R25,39,40,43-55,65-67, 70-92,101-120,121-134	330-3023	2.2K ¼W 5%
R26-28,33-38,124	330-1034	33Ω ¼W 5%
R41	330-6057	5.6M ¼W 5%
R42	330-6034	3.3M ¼W 5%
R29-32,56-64	330-1057	56Ω ¼W 5%
R100	330-2040	390Ω ¼W 5%
R121,122,125	330-2034	330Ω ¼W 5%
R123	330-3011	1K ¼W 5%
R126	330-1013	12Ω ¼W 5%
C1-18,29-37,41-49,65-73, 78-95,129,131,133	300-1930	.1MF 50V
C19-26,38,50-59,62,74,75, 96-113,116-120,117A,117B,117C, 122,123,123A,135-143,146,149	300-1966	.047MF 50V
C27,28,39,40,63,64,76,77, 147,148,151,153	300-4022	15MF 20V (T)
C60	300-1903	.01MF 25V
C61	300-2213	.1MF 50V MYLAR
C114	300-1150	150PF 500V
C115	300-4016	3.3MF 15V (T)
C121	300-1680	280PF 500V
C124-128,144,145,152	300-1047	47PF 500V
C150	300-1018	18PF
LED1-8	370-0026	MV5024 (RED)
Y1	321-0022	15.9744 MHz
SW1	325-1501	SPST, 5 POS
SW2	325-1503	SPST, 8 POS
SW3,8	325-0041	SPDT, MOM, 90°
SW4-7	325-0040	SPDT, TOG, 90°
Q1	375-1050	SPS6551
J1,2	350-0009	CONN. 90°

MNEMONICS	COORD
AØ-A15	4E1
AUTO RESET	3B11
BS1	4A6
BS2	4A6
BS3	4A6
BS4	4A7
BUSAK	3C1
CBUSRQ	3G2
CCK	2B2
CRQAK	2A5
CUBSY	1F11
DBGND	3G3
DØ-D7	4C1
DLNB	1E11
DLMMI/O	5B7
DMAMREQ	2G2
DREN	4E11
DSD	2G7
DSU	2G7
FPL1	2A9
FPL2	2A9
FPL3	2A9
FPL4	2A9
IORQ	4B2
MERST	3G1
MI	4B3
MMI/O	5B7
MR	3B1
MREQ	4B2
NMI	3F1
OCO6	5F1
OCO7	5E1
PARIN	2B2
PAROUT	1E1
PROM	4A7
PWRLED	2A8
RD	4B3
RDO	4B3
RFSH	4B3
RTRS	2E1
SCHDA1	1C11
SCHDA2	1B11
SCSM1	1D11
SCSM2	1C11
SCSM3	1F11
SCSM4	1E11
STDATA	2B1
WAIT	3B11
WR	4B2
ØA	2B1
ØC	3A9
ØAC	3A9
½ØC	3A10

NOTE:
ALL RESISTORS UNLESS OTHERWISE SPECIFIED ARE 1/4W 5%.

E-REV 4

NO.	REVISION	BY	DATE	CHK'D	DATE
0	ORIG. DWG.	JT	11-25-80	JM	12-1-80
1	REVISED PER ECO# 19278 APP'D:	JT	12-18-80	JM	12-19-80
2	REVISED PER ECO# 19355 APP'D:	JT	3-23-81	JM	3-25-81
3/1	REVISED PER ECO#18767 APP'D:	LDB	4-27-81	JM	4-27-81
4/2	REVISED PER ECO#18858D APP'D:	LDB	4-27-81	JM	4-27-81
5/2	REVISED PER ECO# 19105 APP'D:	JEP	6-1-81	JM	6-1-81
6/2	REVISED PER ECO# 19358, APP'D:	JEP	6-1-81	JM	6-1-81
7/3	REVISED PER ECO# 19744 APP'D:	JEP	7-9-81	JM	7-9-81
8/3	REVISED PER ECO# 19589, 19844 APP'D:	JEP	7-9-81	JM	7-9-81
9/3	REVISED PER ECO# 20393 APP'D:	JEP	9-28-81	JM	9-28-81
10/4	REVISED PER ECO# 21314 APP'D:	JEP	12-21-81	JM	12-21-81
11/4	REVISED PER ECO# 21701 APP'D:	LMR	1-14-82	JM	1-14-82
12/4	REVISED PER ECO# 22578 APP'D:	KMP	4-12-82	JM	4-12-82
13/4	REVISED PER ECO# 24780 APP'D:	KMP	2-2-83	JM	2-2-83
14/4	REVISED PER ECO'S# 21422, 21623, 21587, 21749, 23503, 23604, 23605 APP'D:	KMP	2-22-83	JM	2-22-83

WANG LABORATORIES, INC. LOWELL, MASS. U.S.A.		BY	DATE	APPROVED BY	DATE
		DWN JT	11/22/80	E ENGR	3/5/81
		CHK'D JM	12/1/80	SWE	3/5/81
MATERIAL	MODEL NO.			M ENGR	
	SEE ENGR'G SPECIFICATIONS No.			MFG ENGR	
FINISH	TOL. EX. AS NOTED .XX ± FRAC ± .XXX ± ANG ± FINISH √	TITLE	CPU/MEMORY (...		
	SCALE	SHT 2 OF 2	SEE CHART	D	7684	4
			WANG PART NUMBER	SIZE	DRAWING NUMBER	REV.

D 7684

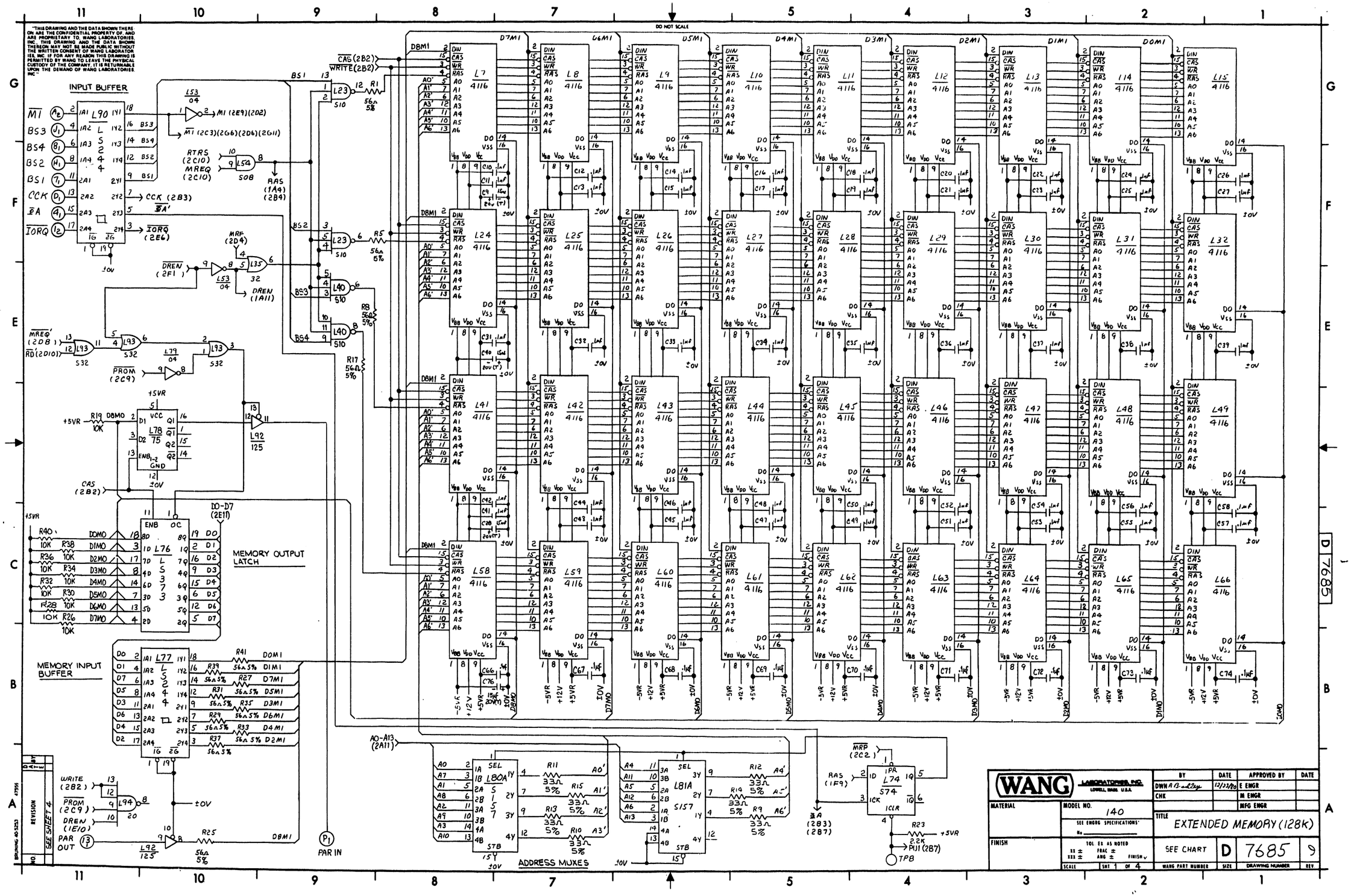

"THIS DRAWING AND THE DATA SHOWN THEREON ARE THE CONFIDENTIAL PROPERTY OF, AND ARE PROPRIETARY TO, WANG LABORATORIES, INC. THIS DRAWING AND THE DATA SHOWN THEREON MAY NOT BE MADE PUBLIC WITHOUT THE WRITTEN CONSENT OF WANG LABORATORIES, INC. IF FOR ANY REASON THIS DRAWING IS PERMITTED BY WANG TO LEAVE THE PHYSICAL CUSTODY OF THE COMPANY, IT IS RETURNABLE UPON THE DEMAND OF WANG LABORATORIES, INC."
DO NOT SCALE
INPUT BUFFER
MEMORY OUTPUT LATCH
MEMORY INPUT BUFFER
ADDRESS MUXES
PAR IN
PAR OUT
WANG LABORATORIES, INC. LOWELL, MASS. U.S.A.
MATERIAL
MODEL NO. 140
SEE ENGRG SPECIFICATIONS
FINISH
TOL. EX. AS NOTED
SCALE
SHT 1 OF 4
BY
DATE
APPROVED BY
DWN A B. Bradley
12/23/80
E ENGR
CHK
M ENGR
MFG ENGR
TITLE
EXTENDED MEMORY (128K)
SEE CHART
D
7685
9
WANG PART NUMBER
SIZE
DRAWING NUMBER
REV
REVISION
SEE SHEET 4

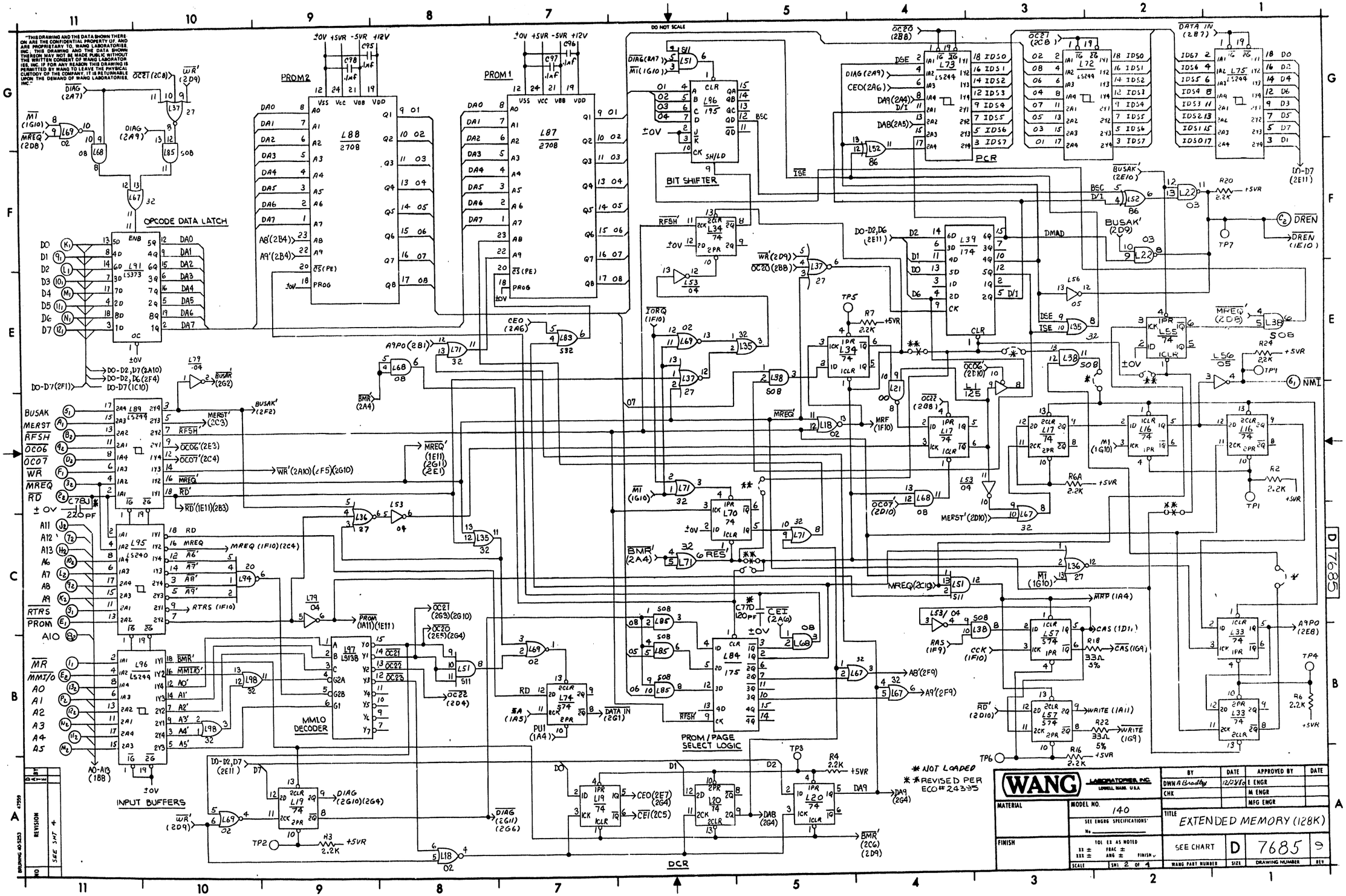

"THIS DRAWING AND THE DATA SHOWN THEREON ARE THE CONFIDENTIAL PROPERTY OF, AND ARE PROPRIETARY TO, WANG LABORATORIES, INC. THIS DRAWING AND THE DATA SHOWN THEREON MAY NOT BE MADE PUBLIC WITHOUT THE WRITTEN CONSENT OF WANG LABORATORIES, INC. IF FOR ANY REASON THIS DRAWING IS PERMITTED BY WANG TO LEAVE THE PHYSICAL CUSTODY OF THE COMPANY, IT IS RETURNABLE UPON THE DEMAND OF WANG LABORATORIES, INC."
DO NOT SCALE
PROM2
PROM1
OPCODE DATA LATCH
BIT SHIFTER
PCR
INPUT BUFFERS
MMLO DECODER
PROM / PAGE SELECT LOGIC
DCR
* NOT LOADED
** REVISED PER ECO#24395
WANG LABORATORIES, INC. LOWELL, MASS. U.S.A.
MODEL NO. 140
EXTENDED MEMORY (128K)
SEE CHART
D 7685 9
SHT 2 OF 4

"THIS DRAWING AND THE DATA SHOWN THEREON ARE THE CONFIDENTIAL PROPERTY OF, AND ARE PROPRIETARY TO, WANG LABORATORIES, INC. THIS DRAWING AND THE DATA SHOWN THEREON MAY NOT BE MADE PUBLIC WITHOUT THE WRITTEN CONSENT OF WANG LABORATORIES, INC. IF FOR ANY REASON THIS DRAWING IS PERMITTED BY WANG TO LEAVE THE PHYSICAL CUSTODY OF THE COMPANY, IT IS RETURNABLE UPON THE DEMAND OF WANG LABORATORIES, INC."

DO NOT SCALE

7685 R3

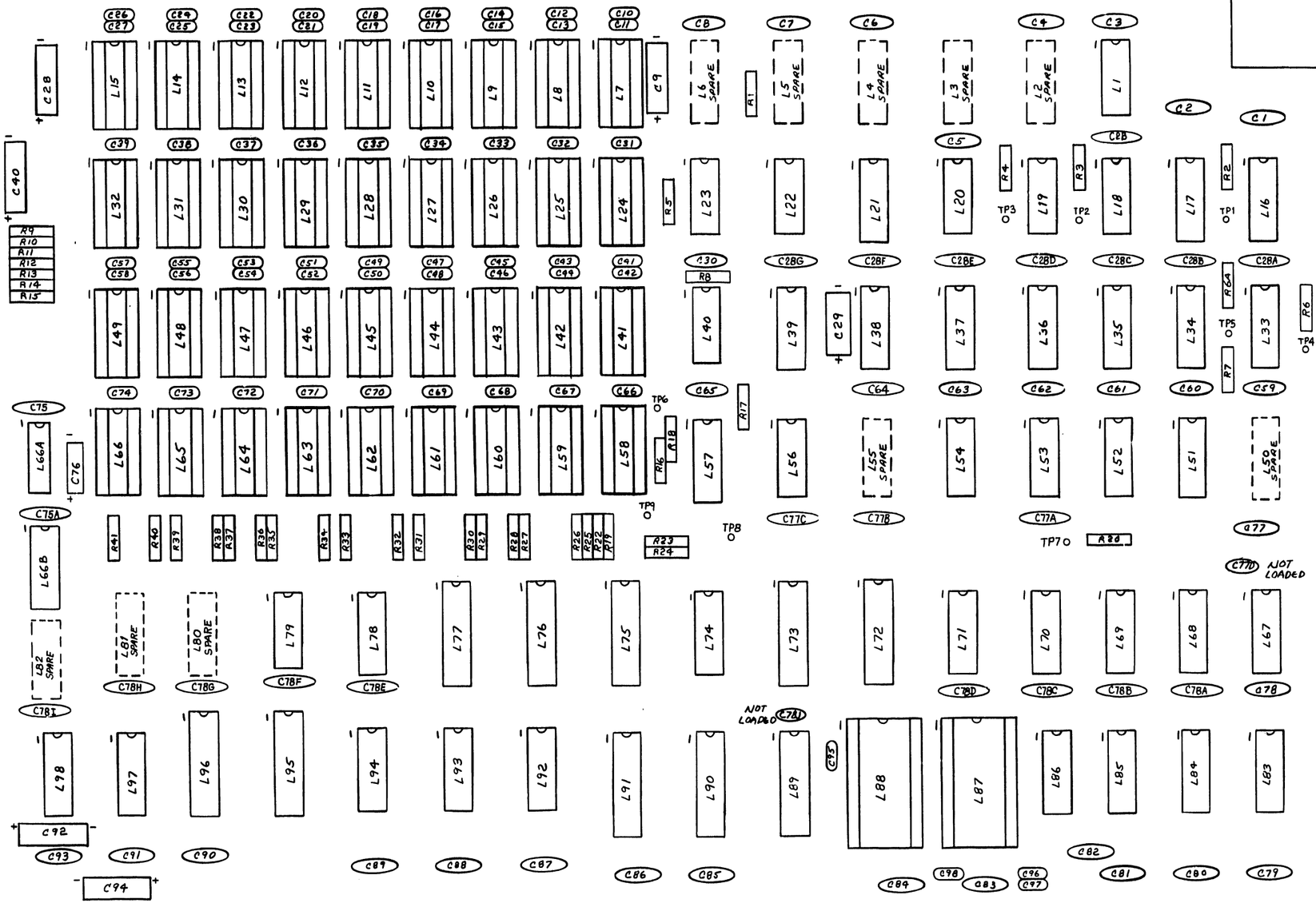

REVISION	DATE	BY
SEE SHT 4		

DRAWING 40-5253 47259

WANG LABORATORIES, INC. LOWELL, MASS. U.S.A.	BY	DATE	APPROVED BY	DATE
	DWN A. Bradley	3-2-81	E ENGR	
	CHK		M ENGR	
			MFG ENGR	

MATERIAL	MODEL NO. 140	TITLE EXTENDED MEMORY (128K)
	SEE ENGRG SPECIFICATIONS No.	
FINISH	TOL EX AS NOTED XX ± FRAC ± XXX ± ANG. ± FINISH √	SEE CHART D 7685 9
	SCALE SHT 3 OF 4	WANG PART NUMBER SIZE DRAWING NUMBER REV

7685

"THIS DRAWING AND THE DATA SHOWN THEREON ARE THE CONFIDENTIAL PROPERTY OF, AND ARE PROPRIETARY TO, WANG LABORATORIES, INC. THIS DRAWING AND THE DATA SHOWN THEREON MAY NOT BE MADE PUBLIC WITHOUT THE WRITTEN CONSENT OF WANG LABORATORIES, INC. IF FOR ANY REASON THIS DRAWING IS PERMITTED BY WANG TO LEAVE THE PHYSICAL CUSTODY OF THE COMPANY, IT IS RETURNABLE UPON THE DEMAND OF WANG LABORATORIES, INC."

IC LOCATION	TYPE	WL. PART NO.
L1,92	74125	376-0324
L2-6, 50, 82, 80, 81	SPARE	
L7-15, 24-32, 41-49, 58-66	MK4116	SEE CHART
L16,17,19,20, 33,34,70	7474	376-0006
L18,69	7402	376-0016
L21	7400	376-0002
L22	7403	376-0028
L23,40	74S10	376-0238
L35,67,71,98	7432	376-0093
L36,37	7427	376-0125
L68	7408	376-0081
L39	74174	376-0098
L51	74S11	376-0237
L52	7486	376-0036
L53,79	7404	376-0010
L54, 85, 38	74S08	376-0200
L56	7405	376-0029
L57,74	74S74	376-0202
L72,73,75,77, 89,90,96	74LS244	376-0288
L76,91	74LS373	376-0310
L78	7475	376-0013
L66A, 66B	74S157	376-0217
L83,93	74S32	376-0205
L84	74175	376-0119
L86	74195	376-0097
L87, 88	TMS2708	SEE CHART
L94	7420	376-0004
L95	74LS240	376-0297
L97	74LS138	376-0294
L7-15, 24-32, 41-49, 58-66	16 PIN SKT.	376-9002
L87, 88	24 PIN SKT.	376-9003

COMPONENT	TYPE	WL PART NO
R1,5,8,17,25, 27, 29, 31, 33 35, 37, 39, 41	56Ω 1/4W 5%	330-1057
R2-4, 6, 6A, 7, 16, 20, 23, 24	2.2K 1/4W 10%	330-3022
R9-15, 18, 22	33Ω 1/4W 5%	330-1034
R19, 26, 28, 30, 32, 34, 36, 38, 40	10K 1/4W 10%	330-4010
C1-8, 28, 28A-28G, 30, 59-65, 75, 75A, 77, 77A-77C, 78, 78A-78I, 79-91, 93	.047μF, 50V	300-1966
C10-27, 31-39, 41-58, 66-74, 95-98	.1μF 50V	300-1930
C9, 28, 29, 40, 76, 92, 94	15μF 20V(T)	300-4022
C77D	120PF	NOT LOADED
C78J	220PF 500V	NOT LOADED

TYPE	IC LOCATION	SPARES
7400	L21	3
7402	L18	2
7403	L22	2
74804	L79	3
7405	L56	4
74S08	L54	3
74S10	L23	1
	L40	1
7474	L70	1
	L55	1
7486	L52	2
7427	L36	1
7432	L98	2
74S32	L83	3
	L93	1
7475	L78	1
74125	L1	3
	L92	2

MNEMONICS	COORD.
A0-A5	2B11
A6-A13	2C11
BS1-BS4	1F11
BUSAK	2D11
CCK	1F11
DREN	2F1
D0-D7	2F11
ΦA	1F11
IORQ	1F11
MERST	2D11
MMI/O	2B11
MR	2B11
MREQ	2D11
MT	1G11
NMI	2E1
OCO6	2D11
OCO7	2D11
PAR IN	1A9
PAR OUT	1A11
PROM	2C11
RD	2D11
RFSH	2D11
RTRS	2C11
WR	2D11

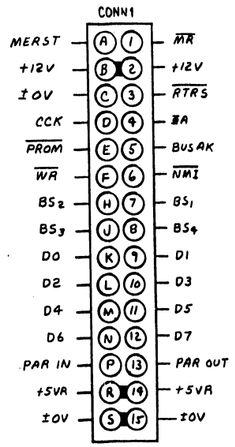

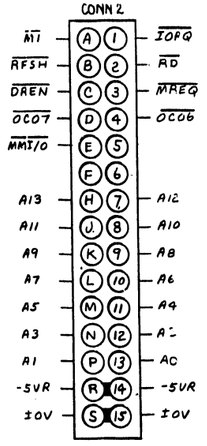

210 = 209 + 377 OR 378				
210	209	L7-15, 24-32, 41-49, 58-66	L87	L88
7685-A	7685	377-0345	378-3064	378-3065

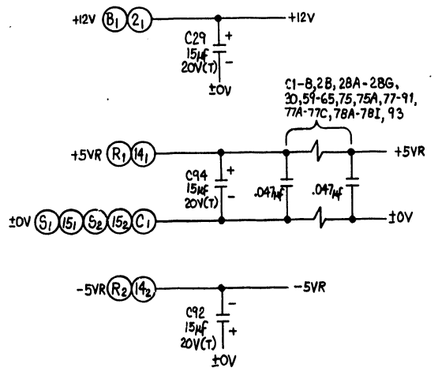

E REV
5

BY	A Bradley	A.D.	J.B.C./J.D.C.	J.M.K.	MJD	J.E.P.	K.M.T.	K.M.P.	J.E.P.
DATE	2-23-81	2-23-81	5/6/81	7-17-81	10-9-81	11-19-81	2/24/82	8/6/82	9-15-82
REVISION	ORIGINATED PER DWR # E 83 3 APP'D: [illegible]	REVISED PER ECO # 18753 APP'D: [illegible]	REVISED PER ECO# 19366 APP'D: [illegible]	REVISED PER ECO # 20385 APP'D: [illegible]	REVISED PER ECO # 20385 APP'D: [illegible]	REVISED PER ECO # 21003 APP'D [illegible]	REVISED PER ECO # 21992 APP'D: [illegible]	REVISED PER ECO # 24233 APP'D: [illegible]	REVISED PER ECO # 24395 APP'D: [illegible]
NO.	0	1	2	3	4	5	6	7	8

	BY	DATE	APPROVED BY	DATE
DWN	A. Bradley	2-23-81	E ENGR	2/6/81
CHK	[illegible]	6 MAR 81	M ENGR	
			MFG ENGR	

WANG LABORATORIES, INC. LOWELL, MASS. U.S.A.

MATERIAL

MODEL NO. 140
SEE ENGRG. SPECIFICATIONS
No.

FINISH

TOL. ER. AS NOTED
XX ± FRAC. ±
XXX ± ANG. ± FINISH √

SCALE | UNIT 4 OF 4

TITLE: EXTENDED MEMORY (128K)

WANG PART NUMBER: SEE CHART | SIZE: D | DRAWING NUMBER: 7685 | REV: 9

D 7685

DO NOT SCALE

BRUNING 40-3253

END