Connect:Direct®
for z/OS

CICS Administration and User's Guide

Version 4.7

Sterling Commerce
An IBM Company

Connect:Direct for z/OS CICS Administration and User's Guide
Version 4.7
First Edition

(c) Copyright 1998, 2008 Sterling Commerce, Inc. All rights reserved. Additional copyright information is located at the end of the release notes.

STERLING COMMERCE SOFTWARE

*****TRADE SECRET NOTICE*****

THE CONNECT:DIRECT SOFTWARE ("STERLING COMMERCE SOFTWARE") IS THE CONFIDENTIAL AND TRADE SECRET PROPERTY OF STERLING COMMERCE, INC., ITS AFFILIATED COMPANIES OR ITS OR THEIR LICENSORS, AND IS PROVIDED UNDER THE TERMS OF A LICENSE AGREEMENT. NO DUPLICATION OR DISCLOSURE WITHOUT PRIOR WRITTEN PERMISSION. RESTRICTED RIGHTS.

This documentation, the Sterling Commerce Software it describes, and the information and know-how they contain constitute the proprietary, confidential and valuable trade secret information of Sterling Commerce, Inc., its affiliated companies or its or their licensors, and may not be used for any unauthorized purpose, or disclosed to others without the prior written permission of the applicable Sterling Commerce entity. This documentation and the Sterling Commerce Software that it describes have been provided pursuant to a license agreement that contains prohibitions against and/or restrictions on their copying, modification and use. Duplication, in whole or in part, if and when permitted, shall bear this notice and the Sterling Commerce, Inc. copyright notice. As and when provided to any governmental entity, government contractor or subcontractor subject to the FARs, this documentation is provided with RESTRICTED RIGHTS under Title 48 52.227-19. Further, as and when provided to any governmental entity, government contractor or subcontractor subject to DFARs, this documentation and the Sterling Commerce Software it describes are provided pursuant to the customary Sterling Commerce license, as described in Title 48 CFR 227-7202 with respect to commercial software and commercial software documentation.

These terms of use shall be governed by the laws of the State of Ohio, USA, without regard to its conflict of laws provisions. If you are accessing the Sterling Commerce Software under an executed agreement, then nothing in these terms and conditions supersedes or modifies the executed agreement.

Where any of the Sterling Commerce Software or Third Party Software is used, duplicated or disclosed by or to the United States government or a government contractor or subcontractor, it is provided with RESTRICTED RIGHTS as defined in Title 48 CFR 52.227-19 and is subject to the following: Title 48 CFR 2.101, 52.227-19, 227.7201 through 227.7202-4, FAR 52.227-14, and FAR 52.227-19(c)(1-2) and (6/87), and where applicable, the customary Sterling Commerce license, as described in Title 48 CFR 227-7202 with respect to commercial software and commercial software documentation including DFAR 252.227-7013, DFAR 252,227-7014, DFAR 252.227-7015 and DFAR 252.227-7018, all as applicable.

The Sterling Commerce Software and the related documentation are licensed either "AS IS" or with a limited warranty, as described in the Sterling Commerce license agreement. Other than any limited warranties provided, NO OTHER WARRANTY IS EXPRESSED AND NONE SHALL BE IMPLIED, INCLUDING THE WARRANTIES OF MERCHANTABILITY AND FITNESS FOR USE OR FOR A PARTICULAR PURPOSE. The applicable Sterling Commerce entity reserves the right to revise this publication from time to time and to make changes in the content hereof without the obligation to notify any person or entity of such revisions or changes.

Connect:Direct is a registered trademark of Sterling Commerce. Connect:Enterprise is a registered trademark of Sterling Commerce, U.S. Patent Number 5,734,820. All Third Party Software names are trademarks or registered trademarks of their respective companies. All other brand or product names are trademarks or registered trademarks of their respective companies.

Sterling Commerce, Inc.

4600 Lakehurst Court Dublin, OH 43016-2000 *
614/793-7000

Contents

Chapter 1 About the CICS Interface 7

Components of the CICS Interface 7
Screen Features 9
Understanding the Screen Conventions 9
Understanding the System Fields 9
Using PF Keys 10
Connect:Direct Documentation 10
About This Guide 11
Task Overviews 11
Administration Tasks 11
User Tasks 12

Chapter 2 Using the Administration System 13

Introduction to the Administration System 13
Structure of the Administration System 14
Using the Administration System 14
Using the Administration Primary Menu 15
Entry Fields 15

Chapter 3 Maintaining Configuration Information 17

Configuration Categories 17
Control Record 17
DTF Node Records 17
Understanding Subtasks 18
Network Node Records 18
Accessing the Administration Configuration Screen 18
Entry Fields 19
Updating the Control Record 19
Entry Fields 20
Menu Options 22
Updating DTF Node Records 23
Entry Fields 24
Updating Network Node Records 25
Entry Fields 26

Chapter 4 Working with the Administration Interface 27

Using the Connect:Direct Administration Interface Screen 27
Entry Fields 28
System Fields 28
Operating the CICS Interface 28
Monitor Transaction 29
Interface Tasks 29
Interface Startup 30
Interface Subtask Management 30
Interface Request Management 30
Interface VTAM Session 31

Chapter 5 Viewing Node Status 33

Accessing the Node Status Screen 33
Line Commands 34
System Fields 34
Viewing the Work Queue 35
System Fields 36

Chapter 6 Maintaining Signon Defaults 37

How Connect:Direct Uses Signon Defaults 37
Accessing the Signon Defaults Screen 37
Entry Fields 38
System Fields 39

Chapter 7 Viewing User Status 41

Accessing the User Status Screen 41
Options 42
System Fields 42

Chapter 8 Operational Considerations 45

Signing On to Multiple DTFs from a Single IUI 45
Signing On to a Single DTF from Multiple IUI Facilities 46
Performing an Immediate or Uncontrolled Shutdown 46
Restarting Task ABENDS 47
Accessing Accounting and Logging Information 47
Using the Extended Submit Facility (ESF) 48
Specifying Connect:Direct Signon Parameters 48
Understanding Connect:Direct CICS Data 49
Connect:Direct DTF and CICS Data 49
Connect:Direct CICS Data Sets 50
Temporary Data Set 50

Chapter 9 Signing On and Off of CICS 51

Signing On . . . 51
Entry Fields . . . 52
Auto-Signon . . . 52
Auto-ReSignon . . . 52
STATUS ALERT Screen . . . 53
Using the Primary Menu . . . 53
Using the SN Option for Multiple Terminal Signon . . . 54
Updating your Signon Defaults . . . 55
System Fields . . . 56
Entry Fields . . . 56
Using the ESF Session Mode Option . . . 56
ESF Session Signon . . . 57
ESF Session Notification . . . 57
DTF Notification . . . 57
Signing Off . . . 57

Chapter 10 Copying a File Using CICS 59

Understanding the Copy Files Menus . . . 59
Generating a Copy File from Connect:Direct for CICS . . . 60
Copying a File from Your Node to Your Node . . . 67

Chapter 11 Building, Modifying, and Submitting Processes through CICS 69

Providing Submit Options . . . 69
Entry Fields . . . 70
System Fields . . . 72
Overriding Security . . . 72
Entry Fields . . . 73

Chapter 12 Selecting a Process through CICS 75

Determining the Status of a Submitted Process . . . 75
Accessing the SELECT PROCESS Screen . . . 75
Understanding the Entry Fields . . . 76
Viewing Summary Information . . . 78
Understanding the Entry Fields . . . 79
Understanding the System Fields . . . 79
Viewing Process Detail . . . 80
Understanding the Entry Fields . . . 81
Understanding the System Fields . . . 82

Chapter 13 Selecting Statistics through CICS 85

Viewing Process Statistics . . . 85
Understanding the Entry Fields . . . 86
Viewing Statistics Summary Information . . . 88
Understanding the Entry Fields . . . 89
Understanding the System Fields . . . 89

Chapter 14 Displaying CICS Messages 91

Displaying Product Messages . . . 91
Accessing the MESSAGE DISPLAY Screen . . . 91
Understanding the Entry Fields . . . 92
Understanding the System Fields . . . 92
Displaying the Last Message . . . 93
Accessing the LAST MESSAGE Screen . . . 93
Understanding the System Fields . . . 94

Chapter 15 Displaying Your CICS User Profile 95

Accessing the User Profile . . . 95
System Fields . . . 96

Appendix A CICS Messages and Problem Isolation 97

Product Messages . . . 97
Problem Isolation . . . 104
DTF Busy Message . . . 104
CICS Transaction ABENDs . . . 105
Your Terminal Hangs—No Response . . . 105

Index 107

Chapter 1

About the CICS Interface

The Customer Information Control System (CICS) Interface provides a number of components that enable users and applications to access, control, and transfer data across networks. The major components, as illustrated on page 7, include:

Component	Description
Interactive User Interface (IUI)	Enables users to transfer files, initiate applications, and monitor activity in a user-friendly environment.
Application Program Interface (API)	Enables the IUI and CICS Administration to communicate to the Data Transmission Facility (DTF) through the session manager. The API interprets the commands, but it is the responsibility of the session manager to establish communication sessions and perform standard session management functions.
Data Transmission Facility (DTF)	Controls information distribution to other nodes in the network. In a Connect:Direct/Plex environment, the Connect:Direct/Manager and Connect:Direct/Servers form the DTF.
Extended Submit Feature (ESF) Mode	Enables users to submit data for transmission even if the DTF is not active. Connect:Direct requests sent to an inactive node are routed to the sending Transmission Control Queue (TCQ) until the inactive node is initiated.

Components of the CICS Interface

The Connect:Direct for z/OS installation offers an optional selection to use the CICS interface. The following figure illustrates a CICS implementation.

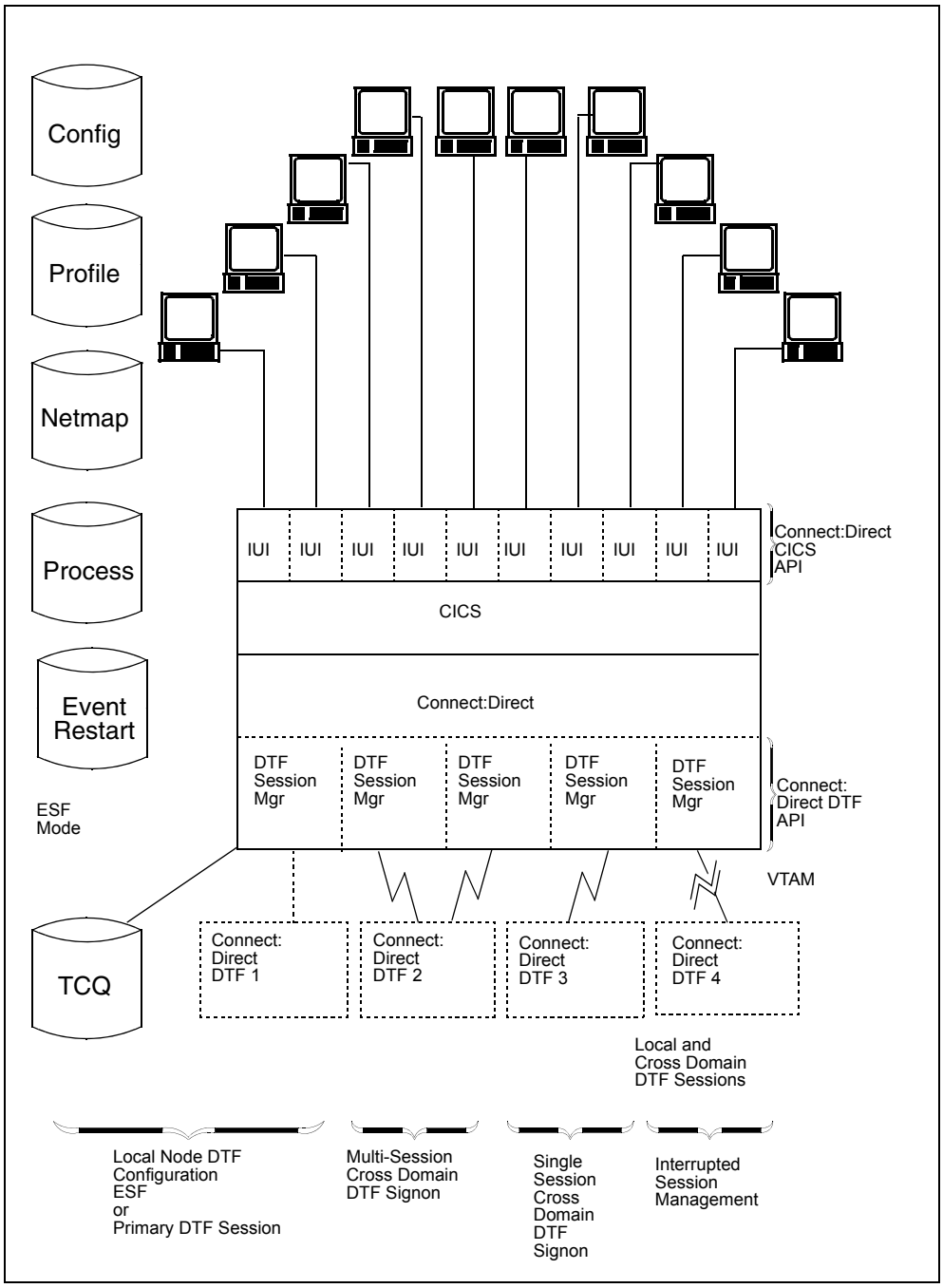
Config
Profile
Netmap
Process
Event Restart
ESF Mode
TCQ
IUI
IUI
IUI
IUI
IUI
IUI
IUI
IUI
IUI
IUI
Connect:Direct CICS API
CICS
Connect:Direct
DTF Session Mgr
DTF Session Mgr
DTF Session Mgr
DTF Session Mgr
DTF Session Mgr
Connect: Direct DTF API
VTAM
Connect: Direct DTF 1
Connect: Direct DTF 2
Connect: Direct DTF 3
Connect: Direct DTF 4
Local and Cross Domain DTF Sessions
Local Node DTF Configuration ESF or Primary DTF Session
Multi-Session Cross Domain DTF Signon
Single Session Cross Domain DTF Signon
Interrupted Session Management

Screen Features

This section describes the screen conventions for the CICS Interface product. The screens are based on the standard IBM 3270 Model 2 display.

Understanding the Screen Conventions

The CICS Interface has the following screen conventions to help you input data and navigate within the system:

- All variable data is highlighted.
- Variable fields contain underscore characters to indicate the size of each field.
- Required fields are highlighted and optional fields are displayed at normal intensity.
- Each screen in the User System contains information fields of various widths and attributes for user data and for system-displayed data.

Understanding the System Fields

As you perform your user activities, the CICS Interface displays several system fields with current information about your data, updates of system information, and responses to your Processes. The system fields include the following:

Field	Description
DATE	The 8-character DATE field contains the system date expressed as month, day, and year (MM/DD/YY) and occurs in the upper right corner of the screen.
TIME	The 8-character TIME field contains the system time expressed as hours, minutes, and seconds (HH:MM:SS) and occurs in the upper right corner of the screen.
ESF MODE	The 8-character ESF MODE field occurs in the upper right corner of the screen, and contains the ESF MODE flag in the event that the DTF is not working, and you are working under ESF. If the field contains the flag ESF MODE, you are working under ESF; if the field is blank, you are working with the DTF. A blank field indicates normal operation.
NODE	The 16-character NODE field, displayed in the upper right corner of the screen, contains the name of your connected node.

Field	Description
MESSAGE	The 75-character MESSAGE field occurs near the bottom of the screen. It contains the system messages associated with the success or failure of your CICS Interface activities. CICS Interface messages that can occur during normal operations are listed in Appendix A, *CICS Messages and Problem Isolation*. **Note:** Some messages issued by the CICS Interface are actually Connect:Direct for z/OS messages (inquire with your administrator about the Connect:Direct message file, or select option MD from the PRIMARY MENU to exercise the MESSAGE DISPLAY screen features, or select **PF2** to view the LAST MESSAGE screen).

Using PF Keys

For those screens that have programmable function (PF) keys defined, you can select standard PF keys to assist you in the performance of CICS Interface activities, while you are at the current screen. You cannot redefine PF keys.

The following table describes the function of each PF key.

Keys	Function
PF3	Exits the current screen, and takes you to the previous screen
PF5	Adds an entry to the list on the screen
PF6	Deletes an entry from the list on the screen
PF7	Scrolls backward through the list of available data on the screen
PF8	Scrolls forward through the list of available data on the screen
PF9	Applies updates to screen information
PF10	Scrolls to the left on the screen
PF11	Scrolls to the right on the screen
ENTER	Refreshes screen data or processes a line command
CLEAR	Resets the data on the screen to default values

Connect:Direct Documentation

See *Connect:Direct for z/OS Release Notes* for a complete list of the product documentation.

About This Guide

The *Connect:Direct for z/OS CICS Administration and User's Guide* is for the following audiences:

- Programmers and network operations staff who use the CICS interface to maintain Connect:Direct for z/OS
- Programmers and network operations staff who use Connect:Direct Processes and environments and invoke utility programs in a z/OS CICS environment

This manual assumes knowledge of the IBM z/OS operating system and CICS/TS. If you are not familiar with the IBM z/OS operating system or CICS/TS, refer to the IBM library of manuals.

Task Overviews

The following tables directs you to the information required to perform the tasks documented in this guide.

Administration Tasks

Task	For More Information, See
Navigating through the menu structure to perform administrative task.	Chapter 2, *Using the Administration System*
Maintaining the control record, DTF node records, and network node records in the configuration file using the configuration screens	Chapter 3, *Maintaining Configuration Information*
Using the interface control screen and the operations of the interface	Chapter 4, *Working with the Administration Interface*
Viewing node status, controlling accessible nodes, and the work queue display	Chapter 5, *Viewing Node Status*
Maintaining signon defaults and updating user signon records and	Chapter 6, *Maintaining Signon Defaults*
Monitoring user status	Chapter 7, *Viewing User Status*
Signing on to multiple Connect:Direct DTFs from a single CICS Interface IUI, signing on to a single Connect:Direct DTF from multiple CICS Interface IUI facilities, performing an immediate or controlled shutdown, accessing accounting and logging information, using the Extended Submit Facility (ESF), specifying Connect:Direct signon parameters, and understanding CICS Interface data sets	Chapter 8, *Operational Considerations*
Using the API driver screen and the sample API program supported by Connect:Direct Event Services Support (ESS) for interface communication with user-written CICS automation applications.	See the *Using ESS with the CICS API* chapter in the *Connect:Direct for z/OS Facilities Guide*

Task	For More Information, See
Understanding CICS messages	Appendix A, *CICS Messages and Problem Isolation*

User Tasks

Task	For More Information, See
Signing on and signing off and the primary options available	Chapter 9, *Signing On and Off of CICS*
Copying files	Chapter 10, *Copying a File Using CICS*
Submitting an existing Process through the CICS Interface	Chapter 11, *Building, Modifying, and Submitting Processes through CICS*
Viewing information about submitted Processes using the SELECT PROCESS screen	Chapter 12, *Selecting a Process through CICS*
Viewing Process statistics using the SELECT STATISTICS screen	Chapter 13, *Selecting Statistics through CICS*
Viewing messages using the MESSAGE DISPLAY and LAST MESSAGE screens	Chapter 14, *Displaying CICS Messages*
Displaying the functions you are authorized to use using the USER INQUIRY screen	Chapter 15, *Displaying Your CICS User Profile*
Understanding CICS messages	Appendix A, *CICS Messages and Problem Isolation*

Chapter 2

Using the Administration System

This chapter provides an overview of the Administration System and the menu structure.

Introduction to the Administration System

The Administration System helps you configure and control the interface. The tasks you can perform while using this system include:

- Configuring Connect:Direct Connect:Direct for z/OS to provide the appropriate functionality to your users while maintaining optimum performance
- Defining the characteristics of the Connect:Direct DTFs to which Connect:Direct for z/OS submits requests
- Activating and deactivating the Connect:Direct interface
- Activating and deactivating the interface with specific Connect:Direct DTFs
- Adding, modifying, and deleting default user signon characteristics
- Monitoring user activity and intervening if those activities compromise Connect:Direct or the CICS environment

The system guides you through a series of nested menus, prompts you for input, and performs the requested function. If errors occur during the processing of your request, the system informs you of the cause of the error and, in some cases, suggests remedial action.

Structure of the Administration System

The menu structure of the Administration System follows.

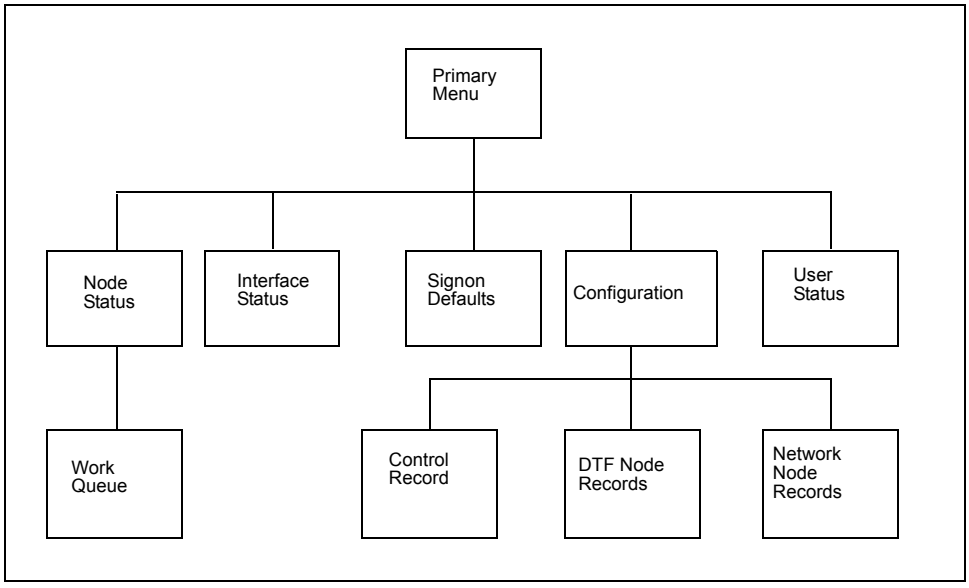

By typing the correct data in the Administration menus and screens, you can perform the following tasks:

- Check and control user status (USER STATUS)
- Add, update, and delete user signon characteristics (SIGNON DEFAULTS)
- Activate and deactivate the Connect:Direct DTF-to-CICS Interface (INTERFACE)
- Monitor and control node status (NODE STATUS)
- Monitor and control the work queue (WORK QUEUE)
- Modify the global control parameters (CONTROL RECORD)
- Add, delete or modify any DTF node parameters (DTF NODE RECORDS)
- Add, delete or modify any network node configurations (NETWORK NODE RECORDS)

Using the Administration System

In order to use the Administration System, both CICS and Connect:Direct must be installed and working on your mainframe. You must also be using an IBM 3270 Model 2 terminal or equivalent. Display the Connect:Direct Administration Primary Menu by using the CDA transaction.

Using the Administration Primary Menu

The Connect:Direct ADMINISTRATION PRIMARY MENU is the root of the administration menu hierarchy and is the access key to all the other features of the Connect:Direct Administration System. Following is an example of the Administration Primary Menu.

```
                        Connect:Direct ADMINISTRATION              10:17:29
                                   PRIMARY MENU
OPTION ==> _


                              C ... CONFIGURATION
                              I ... INTERFACE STATUS
                              N ... NODE STATUS
                              S ... SIGNON DEFAULTS
                              U ... USER STATUS

                                    To restrict U :

                                    CICS USERID  ==> _______________
                                    CICS TERMID  ==> ______
                                 Connect:Direct NODE ==> ________________________
PF keys:  3 Exit
```

Entry Fields

The following table describes each option.

Option	Description
C	Selecting this option takes you to the CONFIGURATION menu. If you need to maintain CICS Interface configuration information, select this option.
I	Selecting this option takes you to the INTERFACE STATUS menu. If you need to activate or deactivate the Connect:Direct interface, select this option.
N	Selecting this option takes you to the NODE STATUS menu. If you need to view the status of nodes that users of the CICS Interface can sign on to, and information about the sessions and tasks under the node, select this option.
S	Selecting this option takes you to the SIGNON DEFAULTS menu. If you need to maintain user signon default information, select this option.
U	Selecting this option takes you to the USER STATUS menu. If the you need to check on a particular userid and the Connect:Direct activities associated with that userid, or if you need to cancel a user task or signon, select this option.

The following fields are not required under option **U**, but you can use them to limit the scope of the display:

Field	Description
CICS USERID	This 8-character field contains the Connect:Direct CICS signon ID.
CICS TERMID	This 4-character field contains a valid terminal ID.
Connect:Direct NODE	This 16-character field contains a valid Connect:Direct node name.

Chapter 3

Maintaining Configuration Information

The CICS Interface provides a variety of configuration options to allow you to define the resources that can be accessed, limit the scope of functions provided to users, and optimize the performance of the system. All CICS Interface configuration information is contained in a single file (CONFIG), which is defined and initially loaded at product installation.

Configuration Categories

The configuration parameters divided into the following categories:

- Control Record
- DTF Node Records
- Network Node Records

Control Record

The Connect:Direct for z/OS Control Record contains information defining the operational characteristics of the Connect:Direct for z/OS system. This information includes flags that activate or deactivate system-wide features of the CICS Interface and parameters that govern the performance of the system.

The Control Record is initially loaded during the installation process. The CICS Interface online administration facilities allow you to modify the contents of this record only. Any modifications performed while the CICS Interface is active are immediately reflected in the execution environment.

DTF Node Records

A CICS Interface user has the ability to access multiple Connect:Direct DTFs for the purpose of copying files from that node to other nodes, submitting Processes, and gathering and reporting on statistical information.

The DTF Node Records contain information identifying any node eligible to be signed on to by the CICS Interface and defining the rules governing access to that node (such as ESF access, output limits, and so forth).

Note: One DTF Node Record is required for each Connect:Direct DTF to which the CICS Interface can sign on directly. The first of these records is defined and loaded at product installation.

Understanding Subtasks

Connect:Direct DTF node information describes each DTF node available to the CICS Interface. At the startup of the Interface, a subtask called CST (controller subtask) is attached by CICS. The CST in turn attaches other subtasks, called WSTs (worker subtasks).

WSTs establish and manage a VTAM session with a DTF, passing Connect:Direct commands, and receiving returned information. One WST communicates with only one DTF, but multiple WSTs can communicate with one DTF.

Network Node Records

To facilitate the task of copying files from one node to another, the CICS Interface provides a means of predefining frequently used nodes, relieving you of the need to know specific information about nodes to be accessed. Nodes defined in Network Node Records display as a numbered list in the COPY FILE BETWEEN NODES screen. You can select nodes by number and provide only that information relating to the file to be sent or received.

Accessing the Administration Configuration Screen

To access the Connect:Direct ADMINISTRATION CONFIGURATION screen, select option **C** from the PRIMARY MENU (CDA transaction). The CONFIGURATION screen enables you to display and maintain the Control Record, DTF Node Records, and the Network Node Records. Following is an example of the screen.

```
                      Connect:Direct ADMINISTRATION                    10:25:28
                              CONFIGURATION
OPTION ==> _




                          C ... CONTROL RECORD
                          D ... DTF NODE RECORDS
                          N ... NETWORK NODE RECORDS




PF keys:  3 Exit
```

Entry Fields

The following table describes each configuration option.

Option	Description
C	Selecting this option, and pressing Enter takes you to the CONTROL RECORD screen. If you need to update the CONTROL RECORD with information affecting the operating characteristics of the CICS Interface, select this option.
D	Selecting this option, and pressing Enter takes you to the DTF NODE RECORDS screen. If you need to view the characteristics of a DTF NODE, such as node name, number of worker subtasks, and entries in the work queue, select this option.
N	Selecting this option, and pressing Enter takes you to the NETWORK NODE RECORDS screen. If you need to view the characteristics of a NETWORK NODE, such as node name, node description, and node type, select this option.

Updating the Control Record

To access the Connect:Direct ADMINISTRATION CONTROL RECORD UPDATE screen select option **C** from the CONFIGURATION screen, and press **Enter**. Only one CONTROL RECORD exists for the CICS Interface system. This control record contains global configuration parameters. Following is an example of the screen.

```
                  Connect:Direct ADMINISTRATION        16:13:15
                     CONTROL RECORD UPDATE

AUTO.SIGNON ..........................  Y         Y OR N
SIGNON.REENTRY .......................  N         Y OR N
Connect:Direct.EQ.CICSID .............  Y         Y OR N
SKIP.SIGNON.PANEL ....................  N         Y OR N
CICS.TRANSACTION.CODE (MONITOR) ......  CDM
CICS.TRANSACTION.CODE (STARTUP) ......  CDI
CICS.TRANSACTION.CODE (PRINT) ........  CDP
CICS.TRANSACTION.CODE (ESS) ..........  CDE
CST.RETRY.INTERVAL ...................  000500    HHMMSS
SESSION.RETRY.INTERVAL ...............  0100      MMSS
ESF.RETRY.INTERVAL ...................  001500    HHMMSS
WORK.RETRY.INTERVAL ..................  0015      MMSS
MONITOR.INTERVAL .....................  30        SS
INACTIVE.INTERVAL ....................  003000    HHMMSS
MAX.SIGNON ...........................  0100
MAX.TASKS ............................  02        01-99
STORAGE.SUBPOOL ......................  127       002-127

MENU OPTIONS:
 CF Y  SB Y  SS Y  SP Y  SD Y  SN Y  MD Y          Y OR N

PF keys:  3 Exit   9 Update   Enter Edit   Clear Reset
```

Entry Fields

The entry fields are:

Field	Description
AUTO.SIGNON	Specifies whether Connect:Direct for z/OS automatically signs you on if a signon defaults record is defined with a CICS userid matching the userid that you specify at CICS signon. The signon defaults record for that CICS user must specify a valid Connect:Direct userid, password and DTF node name. If you specify **Y**, auto-signon is used if the required information is available; if you specify **N**, auto-signon is not used. The default is **Y**.
SIGNON.REENTRY	Specifies whether the CICS Interface remembers that a CICS user previously signed on to the IUI. If this feature is enabled, the user is able to exit the CICS Interface to perform another CICS function and reenter without signing on again. Signon reentry is not performed for a user who signs off CICS and signs back on again between CICS sessions signon reentry is only in effect after the first signon to the CICS Interface. If you specify Y, signon reentry is performed when appropriate; if you specify N, signon reentry is not performed. The default is N.
Connect:Direct.EQ.CICSID	Specifies whether the CICS Interface denies a signon attempt if the Connect:Direct userid does not match the CICS userid specified at CICS signon. If you specify **Y**, a signon is rejected if the IDs do not match; if you specify **N**, no check takes place. The default is **Y**.

Field	Description
SKIP.SIGNON.PANEL	Specifies an optional CICS signon interface that does not require you to retype a userid and password. Validity of this approach depends upon a secure environment existing prior to you selecting the CICS Interface; in other words, userid and password validation by a security subsystem (CA-ACF2, RACF, and so forth) upon original signon to the system. Enable this option by typing Y for this parameter on the Control Record Update screen. The control record can also be set during installation by typing SKIP.SIGNON.PANEL=Y on the CONFIGURATION FILE - CONTROL PARAMETER RECORD screen. The default is **N**.
CICS.TRANSACTION.CODE (MONITOR)	Specifies the 1-4 character transaction codes to be used for the CICS Interface monitor transaction. The monitor transaction scans for pending requests from users and for completed work by Connect:Direct. If the MONITOR TRANSACTION CODE is not specified during installation, it defaults to CDM. If you change this parameter, you must also change the supplied transaction definition.
CICS.TRANSACTION.CODE (STARTUP)	Specifies the 1-4 character transaction codes to be used for the CICS Interface start transaction. If you use the startup PLT to activate the CICS Interface at CICS initialization, this transaction is submitted to run immediately following the completion of CICS initialization processing. If you do not specify the STARTUP TRANSACTION CODE parameter during installation, it defaults to CDI. If you change this parameter, you must also change the supplied transaction definition.
CICS.TRANSACTION.CODE (PRINT)	Specifies the 1-4 character transaction codes to be used for the CICS Interface print transaction. This transaction is attached to the CICS printer in response to CICS print requests. If the PRINTER TRANSACTION CODE parameter is not specified during installation, it defaults to CDP. If you change this parameter, you must also change the supplied transaction definition. Print requests are handled by writing print lines to the CICS Transient Data Area (TDA). When the data is ready for output, a transaction sends the data to the CICS printer specified in the SIGNON DEFAULTS.
CICS.TRANSACTION.CODE (ESS)	Specifies the 1-4 character transaction code to be used for the Connect:Direct for z/OS Event Services Support. If this parameter is not specified during installation, it defaults to CDE. If you change this parameter, you must also change the supplied transaction definition.
CST.RETRY.INTERVAL	Specifies the time interval (in hours, minutes and seconds) between attempts to restart an ABEND of CST (controller subtask). The controller subtask is an operating system subtask responsible for monitoring the worker subtasks responsible for interaction with active Connect:Direct DTFs defined in DTF Node Records (that is, DTFs to which CICS users can sign on). The default is 000500 (5 minutes).
SESSION.RETRY.INTERVAL	Specifies the time interval (in minutes and seconds) between attempts to establish a VTAM session with a DTF defined in a DTF Node Record (that is, a DTF to which CICS users can sign on directly). The default is 100 (1 minute).

Field	Description
ESF.RETRY.INTERVAL	Defines the time interval (in hours, minutes and seconds) between attempts to establish a primary session with a Connect:Direct DTF when, during a prior attempt, the DTF is not active and the node is activated in ESF mode. A node is activated in ESF mode only if the DTF it defines supports ESF. The default is 001500 (15 minutes).
WORK.RETRY.INTERVAL	Specifies the time interval (in minutes and seconds) between the time a unit of work is submitted but cannot be placed in the work queue for a particular node and the time that unit of work is cancelled. The size of the work queue for a particular node is governed by the ENTRIES IN WORK QUEUE parameter in the DTF Node Record. The default is 0015 (15 seconds).
MONITOR.INTERVAL	Contains the time interval, expressed as seconds, between scans for work by the monitor transaction. This parameter is a 2-character field. The monitor watches all Processes, queues, tasks, and task lengths, and regulates the flow of tasks in the system to ensure that any particular task does not seize the computer resources. When all Processes and tasks are completed or pending action by the DTF, the monitor waits for the specified interval before rescanning the work queue. The default is 30 (seconds).
INACTIVE.INTERVAL	Specifies the amount of time (in hours, minutes and seconds) that a worker subtask (WST) is allowed to be inactive before it is detached by the controller subtask (CST). The default is 003000 (30 minutes).
MAX.SIGNON	Contains the maximum number of CICS users and reflects the relative size of the signon table file. This parameter is a 4-character field. The default is 100 entries.
MAX.TASKS	Contains the maximum number of simultaneous subtasks that can be attached in the CICS address space. This parameter is a 2-character field. Specify this field as the total of the worker subtask counts for all DTF Node Records defined to the CICS Interface. The default is **2**.
STORAGE.SUBPOOL	Contains the number of the operating system storage subpool from which the CICS Interface acquires operating system storage. This parameter is a 3-character field. Numbers 002-127 are user-defined (numbers 000, 001, 128-255 are system-defined) areas of storage related to each other usually by the requirements of your session. DTF keeps track of all storage for a given user Process and task. The default is subpool 127.

Menu Options

The following options contain a **Y** or **N** which enables or disables the options on the PRIMARY MENU of the general user. You can use these Y/N flags to determine the level of functionality to be provided by Connect:Direct.

These options affect all users of Connect:Direct for z/OS. If you want to limit the functionality available to specific users, you must use either the authorization functions of Connect:Direct (select only the appropriate options when defining that user in the Connect:Direct Authorization File) or

the Connect:Direct Security exit (set an Authorization Bit Mask to allow or restrict the appropriate options).

Option	Description
CF	Contains the toggle to turn off the COPY FILE option on the PRIMARY MENU. The field is one character long; Y permits you to copy files; N denies permission.
SB	Contains the toggle to turn off the SUBMIT PROCESS option on the PRIMARY MENU. The field is one character long; Y permits you to submit Processes; N denies permission.
SS	Contains the toggle to turn off the SELECT STATISTICS option on the PRIMARY MENU. The field is one character long; Y permits you to select statistics; N denies permission.
SP	Contains the toggle to turn off the SELECT PROCESS option on the PRIMARY MENU. The field is one character long; **Y** permits you to select Processes; **N** denies permission.
SD	Contains the toggle to turn off the SIGNON DEFAULTS option on the PRIMARY MENU. The field is one character long with a **Y** or **N**; **Y** grants permission to change default signon options; **N** denies permission.
SN	Contains the toggle to turn off the CHANGE SIGNON option on the PRIMARY MENU. The field is one character long with a **Y** or **N**; **Y** grants permission; **N** does not.
MD	Contains the toggle to turn off the MESSAGE DISPLAY option on the PRIMARY MENU. The field is one character long with a **Y** or **N**; **Y** grants permission to use this option; **N** does not.

Updating DTF Node Records

The Connect:Direct ADMINISTRATION DTF NODE RECORDS screen is accessed by selecting option **C** on the PRIMARY MENU, then by selecting option **D** on the CONFIGURATION screen, and pressing **Enter**. One DTF node record exists for each DTF node which Connect:Direct users can sign on to directly. Following is an example of the screen.

Note: Changes made to the DTF node record parameters are immediately reflected in the active system.

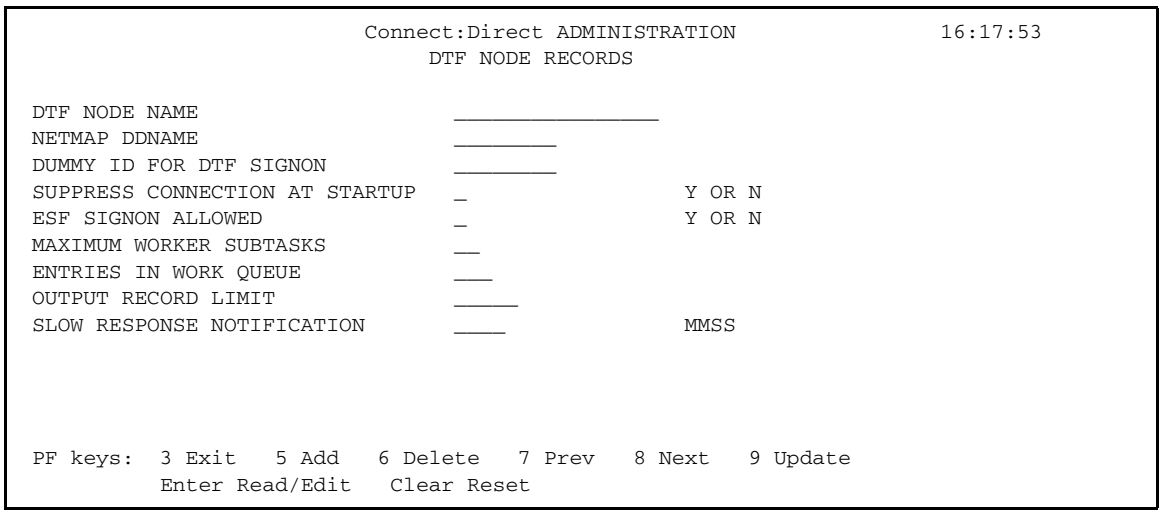

Entry Fields

The following table describes the Entry fields:

Field	Description
DTF NODE NAME	Contains the name of a DTF node. This is a 16-character field.
NETMAP DDNAME	Specifies the DDNAME of the Connect:Direct network map file to be used when initiating a signon to this node. The network map must have an adjacent node definition for this node, but need not be exactly the same network map file the node is using. You must code this value; no default is available. **Note:** The NETMAP DDNAME is defined to CICS using RDO and is the FILENAME used by CICS. You must have one network map file for each node and you must have the DTF node record for each node you want to sign on to.
DUMMY ID FOR DTF SIGNON	Specifies the Connect:Direct userid to be used to initially establish the VTAM session with the DTF. Multiple CICS userids are required if a DTF can have multiple CICS Interface systems signed on concurrently. If you are using the DMGSECUR macro to define your Connect:Direct security exit, this parameter must match the CICS parameter coded for that macro. You must code this value; no default is available.
SUPPRESS CONNECTION AT STARTUP	Contains the toggle for startup connections. This is a 1-character field. If the field contains **Y**, the connection between the specified DTF node and the Connect:Direct system is suppressed when the Connect:Direct software is started. If the field contains **N**, then the connection is made. The default is **Y**.
ESF SIGNON ALLOWED	Specifies whether the Extended Submit Facility is to be supported for this node by Connect:Direct. The DTF identified in this record must support ESF in order to sign on in ESF mode using Connect:Direct. The default is **N**.

Field	Description
MAXIMUM WORKER SUBTASKS	Specifies the maximum number of WSTs (worker subtasks) to be used for this node. Define one WST per parallel session defined for this node. Do not exceed the MAX TASKS value in the Control Record with the total number of worker subtasks defined for all DTF NODE records in the system. The default is **2**.
ENTRIES IN WORK QUEUE	Specifies the maximum number of actual requests to be allowed on the pending work queue for this node. An excessive value here could result in an inordinate response time for terminal users. During installation, the default is the MAXIMUM WORKER SUBTASKS specification.
OUTPUT RECORD LIMIT	Specifies the upper limit on the number of lines of output that are accepted in response to a SELECT PROCESS or SELECT STATISTICS command. Output from these commands is stored in CICS temporary storage until viewed or explicitly deleted. The default is a limit of 800 80-byte records.
SLOW RESPONSE NOTIFICATION	Contains the time interval, expressed as minutes and seconds, after which Connect:Direct notifies you of potential problems with slow response. This is a 4-character field. The default is 0200 (2 minutes).

Updating Network Node Records

To access the Connect:Direct ADMINISTRATION NETWORK NODE RECORDS screen, select option **C** from the PRIMARY MENU, select option **N** from the CONFIGURATION screen, and press **Enter**. The screen fields are scrollable, and allow you to view the contents of the network node records. Following is an example of the screen.

```
                          Connect:Direct ADMINISTRATION                  16:02:23
                              NETWORK NODE RECORDS

NETWORK NODE NAME          ________________

NETWORK NODE DESCRIPTION   ________________________________

NODE TYPE                __   1=OS/390   2=VM       3=VSE       4=VMS
                              5=TANDEM   6=WIN95    7=OS/2      8=OS/400
                              9=UNIX    10=NETWARE 11=WINDOWS  12=MSP
                             13=MVS









PF keys:  3 Exit   5 Add   6 Delete   7 Prev   8 Next   9 Update
          Enter Read/Edit   Clear Reset
```

Because you can type the node name and environment on the COPY FILE BETWEEN NODES screen, it is not required that you define every node participating in a COPYFILE on the NETWORK NODE RECORDS screen.

Note: Changes made to the Network Node Record parameters are immediately reflected in the active system.

Entry Fields

The following table describes the entry fields.

Field	Description
NETWORK NODE NAME	(16-character field) contains the name of the node.
NETWORK NODE DESCRIPTION	(30-character field) contains a description of the node.
NODE TYPE	(1-character field) contains the environment number. Valid environment numbers are as follows: **1** for OS/390 **2** for VM **3** for VSE **4** for VMS **5** for TANDEM **6** for WIN95 **7** for OS/2 **8** for OS/400 **9** for UNIX **10** for NETWARE **11** for WINDOWS **13** for MVS

Chapter 4

Working with the Administration Interface

This chapter describes how to work with the Connect:Direct Administration Interface.

Using the Connect:Direct Administration Interface Screen

To access the Connect:Direct ADMINISTRATION INTERFACE screen, select option **I** from the PRIMARY MENU and press **Enter**.

```
                  Connect:Direct ADMINISTRATION                    10:30:37
                           INTERFACE
    OPTION ==>                                        Connect:Direct VER VV
                                                                    REL RR
                                                                    MOD MM


                           A ... ACTIVATE INTERFACE
                           M ... START MONITOR
                           I ... SHUTDOWN INTERFACE (IMMEDIATE)
                           S ... SHUTDOWN INTERFACE (NORMAL)


          INTERFACE STATUS      ACTIVE
          PENDING REQUEST       NONE
          MONITOR TASK NUMBER   25
          ACTIVE TASKS          0


PF keys:   3 Exit   ENTER Refresh/Process
```

The INTERFACE screen is the key to activating, monitoring, and shutting down the CICS Interface between CICS and the active Connect:Direct DTF nodes. From the INTERFACE screen, you can manually initialize and terminate the operating system subtasks that perform the interaction with Connect:Direct.

Entry Fields

The following table describes each option for the INTERFACE screen.

Options	Description
A	Selecting this option, and pressing Enter activates the interface and automatically starts the monitor transaction.
M	Selecting this option, and pressing Enter starts the monitor transaction. Only use this option in the event of a monitor transaction ABEND.
I	Selecting this option, and pressing Enter performs an immediate (hard) shutdown of the interface. All Connect:Direct user sessions are terminated, regardless of status.
S	Selecting this option, and pressing Enter, performs a normal (soft) shutdown of the interface. All Connect:Direct user sessions are allowed to complete execution.

System Fields

The following table describes the System fields:

Field	Description
VER	(2-character field) contains the version number of the CICS Interface software.
REL	(2-character field) contains the release number of the CICS Interface software.
MOD	(2-character field) contains the modification number of the CICS Interface software.
INTERFACE STATUS	(21-character field) contains ACTIVE or INACTIVE, depending upon the state of the interface. The field contains ACTIVE if the interface is active and changes to INACTIVE if the interface is deactivated.
PENDING REQUEST	(18-character field) contains either NONE, if no activate or shutdown request is pending, or the type of request being processed.
MONITOR TASK NUMBER	(11-character field) contains the number of the monitor transaction or a message such as NOT RUNNING, if the interface is not active.
ACTIVE TASKS	(2-character field) contains the number of the active tasks.

Operating the CICS Interface

In order for the CICS user interface to perform its function, a connection must exist between it and a Connect:Direct DTF. This facility can be local (within the same VTAM domain) or remote (residing in another domain).

This connection is accomplished using operating system subtasks that are attached in the CICS address space at the CICS Interface startup. The subtasks perform two types of functions:

- One or more Worker Subtasks (WSTs) are attached for each active link to a Connect:Direct DTF. These subtasks are responsible for establishing a link to the DTF, passing commands to it, and receiving any results.
- A single Controller Subtask (CST) is created to monitor the work of all WSTs in the system and perform communications functions with the user interface portion of CICS.

Initialization of the CICS Interface invokes programs that perform the following functions:

- Acquires CICS Interface work areas, such as the signon table, the work queue areas, and so forth
- Enables a task control global exit point and its associated global work area
- Reads the configuration information from the configuration file and places that information in the global work area
- Attaches the CST subtask
- Checks for any DTF nodes that are to be activated at initialization and passes information to the CST task to allow it to create the appropriate WSTs and establish the link with the DTF.

Note: The CICS Interface module is also available for the interface autostart at CICS startup. When the module is in the PLTPI, you can start CICS without starting the interface by including a special DD card in the CICS startup JCL deck: **//NDMINIT DD DUMMY**. If present, NDMINIT will not start the interface as part of CICS initialization. The interface can then be started manually.

Monitor Transaction

In addition to these operating system subtasks, a CICS monitor transaction is created to accept input from the user interface, pass it to the CST, and route the output to the appropriate user. This transaction is also responsible for detecting a loss of the CST subtask due to an error condition and performing a restart. The monitor transaction is activated at the CICS Interface startup and remains in the system for the life of the online region. Monitor activities include the following:

- Restarting the interface in case of an ABEND
- Watching for DTF requests which are taking too long
- Forcing retry of requests still in the queue
- Forcing retry of DTF node session establishment
- Attempting to switch from ESF to primary (DTF connected) mode
- Clearing non-terminal signon table entries, at end of transaction
- Clearing signon table entries in case of ABENDs

Interface Tasks

Although CICS runs a number of subtasks (such as journaling and VSAM handling), CICS can be regarded as a single task. All CICS transactions that can generate Connect:Direct requests run from this single CICS task. The CICS Interface runs as a set of separate tasks in the CICS address space. At the startup of the CICS Interface, a subtask called CST (controller subtask) is attached by CICS.

Interface Startup

This isolates CICS from all the non-CICS work involved in communicating to the Connect:Direct DTF through the Connect:Direct API. A CICS Interface monitor transaction is also invoked as part of interface startup to support and monitor interface operation.

The CST in turn attaches other subtasks, called WSTs (worker subtasks), organized by node. The WSTs establish and manage the DTF sessions, passing Connect:Direct commands, and receiving returned information. The CST controls traffic between all CICS Interface transactions and each WST.

Interface Subtask Management

Each WST handles requests for CICS users through the CST. One WST communicates with only one DTF, but multiple WSTs can communicate with one DTF. The DTF-connected WSTs are not associated with any particular CICS transactions. The various Connect:Direct requests generated by CICS Interface users are handled by any of the multiple WSTs which are for a particular DTF node. The CST oversees all the WSTs, and is responsible for coordinating work generated by CICS transactions.

One WST is attached per node at the CICS Interface startup, as defined in the CONFIGURATION file. Additional WSTs for a node are attached as needed, based on concurrent CICS Interface user demand. The maximum number of WSTs (tasks) attached globally for the interface and per DTF node is defined with CONFIGURATION control and DTF node parameters. The DTF node connection limit is edited to be no larger than the number of CICS interactive applications specified in the Network Map for that node.

When an attached WST becomes inactive (is not used for any requests) for a period of time, it is detached by CST. The inactive interval is defined with a CONFIGURATION control option. You can suppress WST activation by DTF node with a CONFIGURATION DTF node parameter.

Interface Request Management

CICS user requests are placed on a work queue with one queue per node. The one or more WSTs attached per node dispatch work from the queue. Maximum queue length by node is defined with a CONFIGURATION DTF node parameter which defines the number of queue entries.

When WST (session limit) is reached and additional WSTs cannot be attached to dispatch work from the queue, requests remain on the work queue until a WST becomes available. When the number of allowed WSTs for a given node is held to a minimum, yet user activity for the given node is high, increase the number of queue entries.

Work queue size is also affected by the CONFIGURATION control option worker retry interval which defines the time elapsed between attempts to obtain a free WST to dispatch work present on the work queue. Connect:Direct user requests are rejected with a DTF busy message, when a DTF node queue reaches its maximum allowed number of entries.

The CONFIGURATION DTF node parameter defines worry time. A message is written to the log when a request to that node takes longer than the specified amount of time. No action is taken by the CICS Interface to automatically abort any requests which take too long.

The CICS Interface also has one system queue for system commands (for example, SHUTDOWN and QUIESCE) to dispatch system requests. You cannot adjust the system queue size.

Interface VTAM Session

In cases where a WST/DTF VTAM session is active, but becomes inactive, the CICS Interface quiesces the node. Pending requests are allowed to complete, even though they can fail. The number of WSTs for the node is reduced to one.

At this point, if the WST is in session with a local DTF, and ESF mode is allowed, the WST switches to ESF mode. An ESF MODE message is displayed to IUI users, stating that a Connect:Direct session error occurred, but ESF MODE is available. Under ESF operation, only the SUBMIT options are displayed on the PRIMARY MENU.

ESF mode operation is enabled for the entire interface through a CONFIGURATION control parameter; ESF mode operation is enabled for each user through a user profile parameter. When a WST fails to establish or drops a DTF session, and ESF is not allowed, then the WST remains attached, but all user requests for the node are rejected.

The WST periodically tries to establish or re-establish (retry) a session with the associated DTF. The CONFIGURATION control parameter session retry interval defines the time lapsed between retries for session connection. An additional CONFIGURATION control parameter, the ESF session retry interval, defines the time elapsed between retries of a dummy DTF session to check if ESF mode has returned to primary mode.

Chapter 5

Viewing Node Status

This chapter describes how to view the status of nodes that are part of your Connect:Direct network.

Accessing the Node Status Screen

To access the Connect:Direct ADMINISTRATION NODE STATUS screen, select option **N** from the ADMINISTRATION PRIMARY MENU and press **Enter**. The Node Status screen enables you to check the status of all DTF nodes eligible for access by the CICS Interface, and you can selectively activate, deactivate, and view pending work for all DTF nodes. Following is an example of the Node Status screen.

```
                  Connect:Direct ADMINISTRATION                  10:30:37
                        NODE STATUS

                 CICS    ADMIN    SESS  SESSION DATE/TIME      MAX  CURR   CURR
  DTF NODE NAME  STATUS  REQUEST  TYPE  OR SESSION MSGID     TASKS  TASKS  WORK
  -------------  ------  -------  ----  -----------------    -----  -----  ----
_ NODE1          INACT            NONE                         3      0     0
_ NODE2          ACTIVE           PRIM  06/19/1998 09:57:18    2      1     0




Line commands:  A  Activate (start first task)  I  Shut immediate
                W  Work queue display           S  Shut normal

PF keys:   3 Exit   ENTER Refresh/Line cmd
```

Press **PF7** and **PF8** to scroll backward and forward, respectively, through the list of DTF nodes connected to the Connect:Direct for z/OS session.

Line Commands

The CICS user interface provides the ability to log on to any Connect:Direct DTF in your network and perform Connect:Direct operations using that node as your Process primary node. DTFs to be accessed must be identified in DTF Node Records in the configuration file along with the configuration parameters to be used when communicating with that node.

Line commands are as follows:

Line command	Description
A	Type this option in the field to the left of the DTF node name and press **Enter** to activate the node.
W	Type this option and press **Enter**, to access the WORK QUEUE screen, if work for this node is being processed. See page 5-3 for how to use the WORK QUEUE screen.
I	Type this option and press **Enter** to perform an immediate (hard) shutdown of the node. All Processes for this node are forced to stop, regardless of status.
S	Type this option and press **Enter** to perform a normal (soft) shutdown of the node. All Processes for this node are allowed to complete execution.

System Fields

The system fields follow:

Field	Description
DTF NODE NAME	(16-character field) contains the DTF node name as typed in the DTF Node Record.
CICS STATUS	(6-character field) contains the status of the node, such as ACTIVE and INACT. **ACTIVE** - The node is activated, either by the CICS Interface initialization or manually. **INACT** - The node is not active.
ADMIN REQUEST	This 8-character field contains the type of administrative request affecting the status of the node, such as ACTIVATE, SHUTIMM, or SHUTNORM. **ACTIVATE** - The node is activated. **SHUTNORM** - A normal shutdown of the node is requested, and the node is quiescing. **SHUTIMM** - An immediate shutdown of the node is requested, and the link with that DTF is being terminated.
SESS TYPE	This 4-character field contains the type of session held with this DTF node, as follows: **NONE** - No session currently exists with this DTF node. **PRIM** - The CICS Interface is currently in session with the DTF node. **ESF** - The DTF is not active, but supports the Extended Submit Facility. The CICS Interface is accepting requests allowed in ESF mode.

Field	Description
SESSION DATE/TIME	This 17-character field contains either the date and time that the connection to this DTF is activated, or the MSGID of the last message issued for this DTF node during activation or deactivation.
MAX TASKS	This 5-character field contains the maximum number of subtasks that are attached to Process requests directed at this node.
CURR TASKS	This 5-character field contains the current number of subtasks attached to Process requests directed at this node.
CURR WORK	This 5-character field contains the number of subtasks currently processing requests directed at this node.

Viewing the Work Queue

The Connect:Direct Work Queue is defined for each node to dispatch Connect:Direct requests and responses. The DTF node configuration file contains information required by the CICS Interface to manage the DTF VTAM or ESF sessions. Each WST uses the standard Connect:Direct API to manage the DTF or ESF session.

To access the Connect:Direct ADMINISTRATION WORK QUEUE screen, select option **W** from the NODE STATUS screen and press **Enter**.

The WORK QUEUE screen fields contain the data describing the tasks in the work queue for each CICS user on a Connect:Direct DTF node. Following is an example of the screen.

```
                      Connect:Direct ADMINISTRATION                  10:30:37
                         WORK QUEUE - NODE "nodename"              Page 01 of 01

                     CICS   LAST    CURR        REQUEST                    WORK
CICS ID   USERID     TERM   TASK#   CMD        DATE/TIME          TD CTR   TASK
-------   --------   ----   -----   ---   -----------------       ------   ----
ID1       ID1        M064   00271    SB   06/21/1998 11:47:13     00282    0346









PF keys:    3 Exit    7 Bwd    8 Fwd    12 Node USER STATUS    ENTER Refresh
```

Scroll backward using **PF7** and forward using **PF8** to view the entries. Press **PF12** to view to the USER STATUS screen, and then press **PF3** to get back to the WORK QUEUE screen.

System Fields

System fields are as follows:

Field	Description
NODE	(16-character field) contains the node name associated with the work queue data.
Page XX of YY	(13-character field) contains the number of the current page for the work queue list.
CICS ID	(8-character field) contains the CICS userid of the user submitting the work.
USERID	(8-character field) contains the CICS userid of the user submitting the work.
CICS TERM	(4-character field) contains the terminal ID from which the work is submitted.
LAST TASK#	(5-character field) contains the transaction number of the task submitting this request.
CURR CMD	(2-character field) contains the representation of the current command executed by the task (for example, CF, SB, SS).
REQUEST DATE/TIME	(17-character field) contains the date and time the work is submitted.
TD CTR	(5-character field) contains the number of bytes (counted by the transient data counter) indicating how much data is written by the exit module for a transaction.
WORK TASK	(4-character field) contains the number of the work task.

Chapter 6

Maintaining Signon Defaults

Connect:Direct enables you to set default CICS signon information. This information is not required but it can make Connect:Direct easier to use. This chapter describes signon defaults.

How Connect:Direct Uses Signon Defaults

When a user enters a Connect:Direct for z/OS CICS transaction, Connect:Direct uses the CICS userid to read profile data set. If it finds a profile record, Connect:Direct uses the record's information to control what the user can do.

If the user's signon defaults record includes a userid and password, Connect:Direct automatically signs on the user. If the signon defaults record do not include a userid and password, Connect:Direct prompts the user for a userid and password before allowing access.

After accessing Connect:Direct, you can change your own signon defaults using the **SD** function.

Accessing the Signon Defaults Screen

To access the Connect:Direct Administration Signon Defaults screen select option **S** from the Administration Primary Menu and press **Enter**. The screen is shown in the following figure.

```
                        Connect:Direct ADMINISTRATION           14:59:46
                                SIGNON DEFAULTS

CICS USERID              ==>  ________

**Connect:Direct**
 USERID  ==> ____________________________________________________________________
 PASSWORD==>

DEFAULT NODE             ==>  ________________
ESF MODE ALLOWED         ==>  _   Y OR N
UPPER CASE PRINT         ==>  _   Y OR N
CICS PRINTER             ==>  ____
PNODE ACCT DATA          ==>  ____________________________________________________
SNODE ACCT DATA          ==>  ____________________________________________________

Do you want all commands for this session to be CASE sensitive? ==>  NO_



PF keys:  3 Exit   5 Add   6 Delete   7 Prev   8 Next   9 Update
          Enter Read/Edit   Clear Reset
```

Entry Fields

The following table describes the entry fields.

Field	Description
CICS USERID	(8-character field) is the acceptable userid for the CICS signon.
USERID	(64-character field) is the acceptable userid for the Connect:Direct signon.
PASSWORD	(64-character field) is the valid password associated with the Connect:Direct userid.
DEFAULT NODE	(16-character field) is the name of the default Connect:Direct node. The user is automatically signed on to this node if it is active, or is denied access if it is not active.
ESF MODE ALLOWED	(1-character field) is the permission for use of the ESF. If the field contains **Y**, permission is allowed. If the field contains **N**, permission is denied.
UPPER CASE PRINT	(1-character field) is the switch for upper case printing. If the field contains **Y**, all printed output is upper case. If the field contains **N**, the printed output is upper and lower case.
CICS PRINTER	(4-character field) is the designation for the CICS printer used for print requests from this user.
PNODE ACCT DATA	(50-character field) is the primary node accounting data for allocation of budget to CPU time, I/O, and other computer resources.
SNODE ACCT DATA	(50-character field) is the secondary node accounting data for allocation of budget to users for CPU, I/O, and computer resource time.

System Fields

The following table describes the system field.

Field	Description
PASSWORD MESSAGE	(44-character field) indicates whether the user's signon defaults record has a password. This field is displayed to the right of the PASSWORD field.

Chapter 7

Viewing User Status

Periodically view the status of a user to determine:

- User access to a resource
- Actions users are performing while using a resource
- Resolve problems encountered by users

Connect:Direct provides the user status function for you to view information about users of the system and, if necessary, intervene to resolve error situations. You can either view all users of the system, a single user (optionally qualified by CICS userid or terminal ID) or a group of users (optionally qualified by Connect:Direct DTF node).

Accessing the User Status Screen

To access the Connect:Direct ADMINISTRATION USER STATUS screen from the PRIMARY MENU, select option **U** and press **Enter**. You have the option, while on the PRIMARY MENU screen, to restrict the scope of the status display. Restrict the scope by specifying the CICS userid, terminal ID and Connect:Direct node that you want to display on the USER STATUS screen. To see all signed-on users, do not restrict your selection.

Following is an example of the USER STATUS screen.

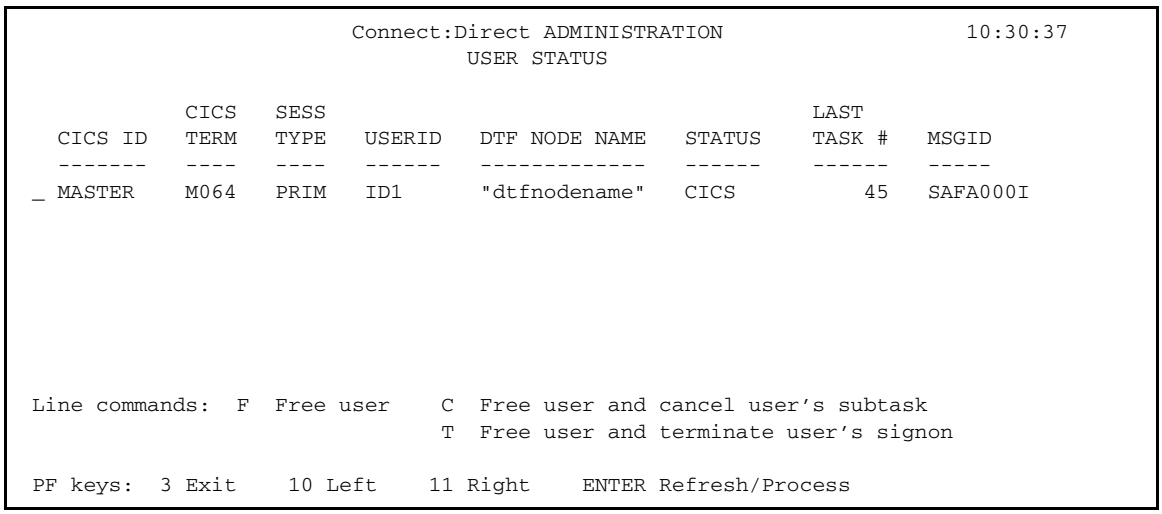

Options

You normally select the following options in the underscore field to the left of the CICS userid, when a user security violation or resource allocation is abused:

Option	Description
F	Selecting this option frees any user from use of the CICS Interface system.
C	Selecting this option frees any user from use of the CICS Interface system, and cancels that user's subtask.
T	Selecting this option frees any user from use of the CICS Interface system, and terminates that user's signon.

System Fields

The following table describes the systems fields:

Field	Description
CICS ID	(8-character field) contains the CICS userid of all currently signed-on users.
CICS TERM	(4-character field) contains the CICS terminal ID of all currently signed-on users.
SESS TYPE	(4-character field) contains the session type (PRIM or NONE).
USERID	(8-character field) contains the Connect:Direct userid of all currently signed-on users.
DTF NODE NAME	(16-character field) contains the DTF node name the user is signed on to.
STATUS	(7-character field) contains the STATUS of a user.

Field	Description
LAST TASK #	contains the last task number of a user Process.
MSGID	contains the message ID of the last message for a given user.

If you press **PF11** to scroll right on the screen, the following fields are displayed:

Field	Description
TD CTR	(5-character field) contains the number of bytes (counted by the transient data counter) indicating how much data is written by the exit module for a transaction.
LAST SIGNON	contains the time of the last signon.
LAST REQUEST	contains the time of the last request.

Chapter 8

Operational Considerations

This chapter describes the following CICS operational considerations:

- Signing on to multiple Connect:Direct DTFs from a single CICS Interface IUI
- Signing on to a single DTF from multiple CICS Interface IUI facilities
- Performing an immediate or uncontrolled shutdown
- Restarting Task ABENDs
- Accessing accounting and logging information
- Using the Extended Submit Facility (ESF)
- Specifying Connect:Direct signon parameters
- Understanding CICS Interface data sets

Signing On to Multiple DTFs from a Single IUI

You can use the Connect:Direct for z/OS IUI to sign on to multiple Connect:Direct DTFs on either local or remote processors. To take advantage of this facility, you must consider the following:

- You must provide VTAM access to the DTF you want to sign on to. For local DTFs (within the control of the same VTAM subsystem), you must provide IUI APPLIDs that may be used by ISPF or CICS IUI facilities. If the DTF facilities are located on remote processors, you must define the IUI APPLIDs for those DTFs to the local VTAM subsystem as cross-domain resources.
- For each DTF you want to access through the CICS IUI, you must define a DTF Node Record for that facility in your CICS configuration file. You can define the DTF Node Record by using the configuration update facilities of the **CDA** transaction.
- The DTF node record in your configuration file must include the DD name of a Network Map file in order to communicate with the remote Connect:Direct DTF. This Network map must have the remote DTF defined as an adjacent node.

Note: All DTF nodes do not have to use the same Network Map file; for instance, if you want to communicate with two DTFs with different Network Map contents, you can specify an alternate Network Map in the CICS JCL (or using the RDO) and in the DTF node record in order to communicate with the second DTF, as long as that DTF is defined as an adjacent node in the Network Map.

- All Processes to be submitted to a remote DTF facility must reside in the Process library (DD name DMPUBLIB) defined for your CICS system.

Signing On to a Single DTF from Multiple IUI Facilities

Not only can you sign on to multiple DTF facilities from a single CICS IUI, but you can also sign on to a DTF from multiple CICS IUI systems. To sign on to a DTF from multiple CICS IUI systems, note the following:

- If you are using the DMGSECUR macro to generate your DTF security exit and provide a value for the CICSID keyword at exit generation, all CICS systems accessing that DTF must specify the same CICSID in their signon requests as specified in the CICSID keyword. The password for the CICS signon to a DTF is always CICSIUI.

  If the CICSID keyword is not specified in the DMGSECUR macro, no checking of CICSIDs for CICS signon requests are performed in the signon exit; however, the CICSID value with a password of CICSIUI are passed to your security facility (if available) or to the Connect:Direct Authorization Facility for validation. The CICSID to be used when signing on to a particular DTF is specified in the CICS DTF NODE configuration record for that DTF.

  The CICSID equals the userid that is specified on the DTF NODE RECORDS SCREEN. If you let CICSID default at installation time, the value is CICSUSER. For example, CICSID=CICSUSER.

  Reassemble the supplied security exit for the value to take effect.
- If you do not want to use the DMGSECUR macro to generate your DTF security exit, you can recognize the Connect:Direct for z/OS dummy signon by checking the password, which is always CICSIUI. When a dummy signon is received from Connect:Direct for z/OS, your security exit returns an Authorization Bit Mask (ABM) of binary zeros.
- To implement the CICS IUI on a base Connect:Direct that has Stage 2 security turned on, modify the supplied security exit. The exit to be modified depends on which security product is running on the system.

Performing an Immediate or Uncontrolled Shutdown

The CICS IUI facility provides two facilities for orderly termination of the interface, as follows:

- Termination is performed automatically by the CICS monitor transaction upon detection of a normal termination of CICS (through a CEMT PERFORM SHUTDOWN command) when the PLTSD in use specifies the Connect:Direct for CICS shutdown program.
- You can terminate the interface manually by using the CDA transaction.

If you perform an immediate CICS shutdown (through the CEMT PERFORM SHUTDOWN IMMEDIATE command) or if CICS terminates abnormally, you may receive system A03 ABENDs from the z/OS interface. The ABENDs are generated as a result of region termination without detaching all the operating system subtasks created by the CICS IUI facility.

In order to avoid the additional ABENDs, you must terminate the CICS IUI facility manually, through the CDA transaction, before you issue the CEMT PERFORM SHUTDOWN IMMEDIATE command.

Restarting Task ABENDS

Administrative options exist to either quiesce (allowing pending requests to complete) or immediately shut down a specific node or the entire CICS Interface. After the shutdown has completed, another administrative option enables you to restart the CICS Interface.

In case the entire CICS Interface ABENDs, CICS is notified. The abnormal termination is recorded in the CICS CWA. When the CICS Interface monitor transaction detects that the interface failed, tries to automatically restart the interface. Users with requests to the interface when it crashed are freed by the CICS Interface monitor and the users are sent a message explaining the problem.

If a WST ABENDs, then the CST is notified. If any request from a CICS user is pending, CST fills in the return code and message for the user, informing the user that the command might have failed. If the failing WST is the only one running for a node, CST attempts to reattach the WST.

Accessing Accounting and Logging Information

Connect:Direct accounting is accomplished by the DTF. Accounting and statistics are gathered accurately as the DTF enables the userid to be extracted from the UICB for each Connect:Direct command entered.

CICS logging is accomplished in the background of CICS operations, but does not record all CICS events and does not duplicate any other Connect:Direct logs. Some events also display on the system console, where major CICS events and errors are reported, such as the following:

- Interface startup
- CST attach
- WST attach
- Node signon of dummy CICS ID
- WST session failure

- WST detach
- CST detach
- CST termination
- Administrative commands affecting sessions and requests
- Return information for CICS users who issue a request and then abnormally exit CICS without waiting for the response

Using the Extended Submit Facility (ESF)

ESF mode is invoked when an active Connect:Direct DTF session fails or when session establishment fails. In order for Connect:Direct for z/OS to activate ESF, you must install the ESF option on the local DTF and you must enable the option in the configuration file.

The user must also include the parameter ESF=YES in the SIGNON command. In ESF mode, a node is available for use only for SUBMIT commands which the user writes directly to the local DTF TCQ file. ESF SUBMIT requests can be issued only by those users who specify ESF as a profile (signon defaults) option.

Specifying Connect:Direct Signon Parameters

Four parameters in the Connect:Direct SIGNON command explicitly support the CICS IUI as follows:

Parameter	Description
TYPE=CICS	Enables a SIGNON command to be embedded in the middle of an API session. This parameter serves no other function and is invalid for a normal signon.
TDEXIT=modname	Enables specification of the exit to receive control for temporary data set I/O. This parameter is mutually exclusive with the TMPDD, TMPDSN, UNIT, and VOLSER parameters. This exit is called for OPENs, CLOSEs, and WRITEs to the temporary data set.
TDLIMIT=nnnnn	Restricts the number of Connect:Direct statistics. Data is returned from the DTF for the IUI Select Statistics (SS) function. The Connect:Direct API SIGNON (used by CICS WSTs to connect to a Connect:Direct DTF) includes a LIMIT= PARAMETER RECORDS returned by the DTF. The DTF truncates data sent to the Connect:Direct WST API and appends a final record indicating that excessive output is truncated.
NETDD=ddname	Enables a SIGNON command to specify the DDNAME of a Connect:Direct Netmap data set which is already allocated.

Understanding Connect:Direct CICS Data

This section lists files and other data used by Connect:Direct DTF and CICS.

Connect:Direct DTF and CICS Data

The following data, *accessed in read-only mode under CICS*, is used by Connect:Direct DTF and the CICS Interface:

Data	Description
NETMAP (DDN=NETFIND)	At least one netmap file exists for each CICS region. The file is defined as a CICS file. It is updated in batch and contains all Connect:Direct nodes available to this CICS environment. Some of the information for the network Connect:Direct nodes is also contained in the Configuration File along with additional fields that you can update.
PROCESS (DDN=DMPUBLIB)	One DD name exists for each CICS region. Several files can be concatenated. *It is not defined as a CICS file*. It is allocated by CICS and used at the subtask level by the Connect:Direct API only. If necessary, you can dynamically allocate and deallocate it using CICS transaction ADYN.
MESSAGE (DDN=NDMMSG)	One file exists for each system. It is defined as a CICS file and is allocated and opened by CICS. It is updated in batch using the Connect:Direct message load utility.
TCQ	One Transmission Control Queue (TCQ) file exists for each Connect:Direct node. *It is not defined as a CICS file.* It holds submit (ESF) requests when Connect:Direct DTF is down. It is used at the subtask level by the Connect:Direct API only. It is allocated by CICS and opened by a subtask. If necessary, you can dynamically allocate and deallocate it using the CICS transaction ADYN.
RPLERRCK (DDNAME)	*It is not defined as a CICS file nor is it in the RDO*. It contains VTAM errors written to a sequential file by the Connect:Direct interface and is defined as SYSOUT.
EVENT RESTART (DDN=NDMEVNT)	One file exists for each CICS region. It is defined as a CICS file, and is allocated and opened by CICS. It is updated by the Event Services Support, and is used for restarting ESS.
Trace Files	Several files within the Connect:Direct API are dedicated to system trace functions, but are not explicitly used by the CICS Interface. The Connect:Direct API design enables trace data to be written when they are available. To capture trace data, add the appropriate DD name statements to the CICS startup JCL. The files must be present at CICS initialization. **Note:** Do not dynamically allocate trace files after CICS initializes. Each Connect:Direct API (one per WST) writes trace data to these files when present. An example is NDMCMDS, which you can use to view all commands submitted to the API.

Connect:Direct CICS Data Sets

The following data sets, used only by Connect:Direct for z/OS, are for the CICS Interface environment and are updated under CICS:

Data Set	Description
CONFIGURATION	One file exists for each CICS region. It is defined as a CICS file. You can update it online through administrator functions. It is a VSAM KSDS file. It contains all Connect:Direct nodes available to this Connect:Direct for z/OS environment as does NETMAP, but CONFIGURATION contains system parameters that control the Connect:Direct CICS API environment.
USER PROFILE (SIGNON DEFAULTS)	One file exists for each CICS region. It is defined as a CICS file that is a VSAM KSDS file with the CICS userid as key. Update it using the signon defaults function and use it to set up auto-signon to Connect:Direct.

Temporary Data Set

The Connect:Direct API TDEXIT parameter configures the routing of Connect:Direct statistics records to CICS Temporary Storage. CICS Temporary Storage, containing the data, is retained until the user exits the SELECT STATISTICS screen. CICS Temporary Storage containing the data is then deleted.

Chapter 9

Signing On and Off of CICS

This chapter discusses signing on and off the CICS Interface, using the Connect:Direct PRIMARY MENU screen, changing your signon defaults, and performing a multiple terminal signon.

Signing On

In order to use the CICS Interface, you must first sign on. You must install both CICS and Connect:Direct and they must be working on your mainframe. You must also be using an IBM 3270 terminal or equivalent. Sign on as follows:

1. Sign on to CICS using the CESN transaction (if needed).
2. Sign on to Connect:Direct for z/OS, using the CD transaction.
3. Complete the prompted signon information.

The Connect:Direct SIGNON screen shows prompts for your userid, password, and node name. Following is an example.

```
                          Connect:Direct SIGNON                          10:13:12




                     USER ID   ==> XXXXX1
                     PASSWORD  ==>
                     NODE NAME ==> NODE.NAME



Do you want all commands for this session to be CASE sensitive? ==>  NO



PF keys:  1  Help    3  Exit
```

The Connect:Direct SIGNON screen is the first screen displayed, unless you are authorized for auto-signon or auto-resignon. Type the userid, password, and node name information on this screen. After you have successfully signed on, you see the PRIMARY MENU screen, described on page 54.

Entry Fields

The following table describes the entry fields for the Connect:Direct SIGNON screen:

Field	Description
USER ID	Following the USERID prompt, type in your userid. The 64-character field contains the acceptable Connect:Direct for z/OS password for the CICS Interface. The CICS Interface administrator has an option to force your Connect:Direct userid to be the same as the CICS userid. This option supports security systems designed to use a single ID per user. When this option is set, the CICS Interface fills the signon screen with the CICS userid. The signon USERID field is then protected from update.
PASSWORD	Following the PASSWORD prompt, type in your password. The 64-character field contains the acceptable Connect:Direct for z/OS password for the CICS interface. The field is darkened to maintain security.
NODE NAME	Following the NODE NAME prompt, type in the name of the Connect:Direct node to which you want to sign on. Include the name of the 16-character field of an active node.
Do you want all commands for this session to be CASE Sensitive?	Following this question, indicate whether you want to allow mixed case input. This option is available as a session default, and you can specify the option during signon. You can override the specified default on commands that apply to userid, password, and data set name. When you submit commands and specify YES, Connect:Direct includes the CASE=YES parameter with your command. **Note:** Terminals used for Connect:Direct's CICS interface must be defined with UCTRAN(NO) if mixed case data is required.

Auto-Signon

If you are authorized for auto-signon, the SIGNON screen is displayed with an IN PROGRESS message. Connect:Direct uses information stored as part of your user profile to complete the signon process. If you are not authorized for auto-signon or your user profile does not contain signon information, then you must sign on to Connect:Direct manually, through the SIGNON screen.

Note: Connect:Direct uses the CICS userid key to access profile information even when the CICS userid does not equal the Connect:Direct userid.

Auto-ReSignon

If configured for resignon, the CICS Interface automatically resigns on those returning to CICS, after exiting CICS to use other CICS transactions. Resignon is canceled when you sign off CICS.

Note: When you attempt to reenter the CICS IUI, your userid and password are reverified by the DTF.

STATUS ALERT Screen

If you attempt to use the CICS Interface without first signing on to CICS, you see the Connect:Direct STATUS ALERT screen.

The STATUS ALERT MESSAGE displayed near the center of the screen indicates a failure of your SIGNON attempt. If you encounter this screen, press **PF3** to go to a blank screen with the message CD TRANSACTION ENDED in the upper left corner. At this point, sign on to CICS and then type in the CD transaction, followed by **Enter** to go to the Connect:Direct PRIMARY MENU.

Note: If the signon transaction at your site is defined with CICS security or with RACF, CA-ACF2, or CA-TOP SECRET security, messages are displayed from the appropriate security facilities instead of the STATUS ALERT screen messages.

If the CICS Interface is not active, the STATUS ALERT screen is displayed with a message indicating that the interface is not active. In this case, you must activate the CICS Interface using the CDA transaction. In addition, if your node is not active to the CICS Interface, either through the interface or through the node, you cannot sign on to that node. Ask your administrator to activate your session, your interface, or your node. See the *Connect:Direct for z/OS Administration Guide.*

Using the Primary Menu

The Connect:Direct PRIMARY MENU is the root menu of the menu hierarchy and is the access key to all other features of the CICS Interface.

The PRIMARY MENU contains a list of authorized IUI functions based on your Connect:Direct function authorization. Your administrator can globally restrict these IUI functions in the system Configuration file, so some options may not be available to you. In addition, under ESF operation, the options are restricted to submit and utility options only. Following is an example of the Connect:Direct PRIMARY MENU.

```
                    Connect:Direct PRIMARY MENU                    15:52:53
                                                                  node.name

OPTION ==> __


                          CF  COPY FILE
                          SB  SUBMIT PROCESS

                          SP  SELECT PROCESS
                          SS  SELECT STATISTICS

                          MD  MESSAGE DISPLAY
                          SD  SIGNON DEFAULTS
                          SN  CHANGE SIGNON



SAFA000I - Connect:Direct signon process completed.
PF keys:  1 Help   2 Msg   3 Exit   6 Id
```

The 2-character OPTION field contains your option selection as follows.

Option	Screen Accessed
CF	COPY FILE BETWEEN NODES
SB	SUBMIT PROCESS
SP	SELECT PROCESS
SS	SELECT STATISTICS
MD	MESSAGE DISPLAY
SD	SIGNON DEFAULTS
SN	SIGNON

Press **Enter** after making your selection. Options CF, SB, SP, SS, and SD are described in the chapters that follow. Options SD and SN are described in this chapter.

Using the SN Option for Multiple Terminal Signon

The signon SN option also displays the signon screen. You can sign on to a Connect:Direct node using signon information other than that specified in your user profile. You can sign on as you want, without updating your user profile.

By using the SN signon option, you can sign on to multiple Connect:Direct nodes, by signing on to multiple CICS terminals. This is a convenience, not a multiple signon.

If you sign on to multiple terminals, only the latest DTF signon authorization rules apply. The latest authorization rules are used for all terminals where you previously signed on.

Updating your Signon Defaults

You can use the CICS IUI Signon Defaults (SD) menu option to type your signon defaults, which are stored as part of your user profile and used for subsequent CICS IUI access.

The administrator can also assign your user profile information. If you are authorized for auto-signon, you can bypass the Connect:Direct signon screen by providing signon defaults.

Note: User profile information is keyed by CICS userid.

Use the SIGNON DEFAULTS screen to update your Connect:Direct password, default node, ESF mode allowance, uppercase printing, CICS session printer, and sending and receiving node accounting information. To access the SIGNON DEFAULTS screen, select option **SD** on the PRIMARY MENU and press **Enter**. Following is an example.

```
                              SIGNON DEFAULTS                      11:51:48
                                                                 node.name

CICS USERID             ==>   ________

**Connect:Direct**
 USERID  ==> XXXXX1
 PASSWORD==>

DEFAULT NODE            ==>   NODE.NAME
ESF MODE ALLOWED        ==>   Y   Y OR N
UPPER CASE PRINT        ==>   Y   Y OR N
CICS PRINTER            ==>   LPT1
PNODE ACCT DATA         ==>   ________________________________________________
SNODE ACCT DATA         ==>   ________________________________________________

Do you want all commands for this session to be CASE sensitive? ==>  NO



PF keys:  1 Help   2 Msg   3 Exit   4 Menu   6 Id   9  Update   Enter Edit
          Clear Reset
```

When you type in your Connect:Direct userid and password and press **Enter**, then your current information is displayed. Use the **ARROW**, **TAB**, and **RETURN** keys to move the cursor to the field you want to change. You can modify any field and press **PF9** to update the file.

System Fields

The following table describes the system field:

Field	Description
CICS USERID	This 8-character field contains your CICS userid. The signon defaults are keyed by CICS userid. If you have a CICS userid is shared, then your update to the signon defaults affect all users of that userid.

Entry Fields

Entry fields are:

Field	Description
Connect:Direct USERID	This 64-character field contains your Connect:Direct userid. This field is required.
Connect:Direct PASSWORD	This 64-character field contains your Connect:Direct password for the Connect:Direct session. The field is darkened to maintain security.
DEFAULT NODE	This 16-character field contains the name of your default node.
UPPER CASE PRINT	This 1-character field contains the **Y** or **N** toggle to force uppercase printing on the CICS printer. **Y** means that all of the printed reports and summary table printouts from this user are in uppercase.
CICS PRINTER	This 4-character field contains the designation for the printer connected to your environment.
PNODE ACCT DATA	This 50-character field contains your accounting data for the primary node. You can use it for your cost billing for CPU, I/O, and system resource time, materials, and personnel.
SNODE ACCT DATA	This 50-character field contains your accounting data for the secondary node. You can use it for your cost billing for CPU, I/O, and system resource time, materials, and personnel.

Using the ESF Session Mode Option

ESF MODE enables you to continue to submit processes when an active Connect:Direct for z/OS DTF session fails or when session establishment fails. The ESF MODE interface differs from the primary node in that the PRIMARY MENU only displays the SUBMIT options. You must install the ESF option on the local DTF and you must enable the ESF option in the Configuration file.

Note: In ESF MODE, the local node is available for use only through SUBMIT commands.

ESF SUBMIT requests can only be issued by those who have the ESF specified as a profile (SIGNON DEFAULTS) option.

Note: This option is restricted to the local node. The administrator can globally disallow it.

ESF MODE operation is toggled on for the entire Connect:Direct for z/OS interface through an administrator parameter. ESF MODE operation is also toggled on for each user through a user profile parameter.

For the non-terminal user of the interface, the switch to primary mode (DTF MODE) is attempted until that task completes. This limitation prevents having to abort the non-terminal processing (which could not continue in primary mode without another signon).

ESF Session Signon

The following section describes how Connect:Direct for z/OS notifies users of an ESF session signon and outlines the changes to the user interface after an ESF session signon.

ESF Session Notification

After you signon to ESF mode, Connect:Direct for z/OS notifies users that the session is in ESF mode in the following ways:

- a message is displayed on all user screens that the session is in ESF mode
- when a node session switches from ESF to primary mode, or from primary mode to ESF mode, all terminal users of that node are notified on their next IUI access.

DTF Notification

Connect:Direct for z/OS periodically attempts to establish or reestablish a failed DTF session. When ESF mode switches back to primary mode, Connect:Direct for z/OS prompts you for primary mode signon.

Connect:Direct for z/OS displays a special screen informing IUI users that the DTF has become active or inactive. This screen gives you the option either to exit Connect:Direct for z/OS or to resignon in ESF mode.

Signing Off

The signoff sequence is as follows:

1. Press **PF3** repeatedly until you reach the PRIMARY MENU or press **PF4** once from your current screen to go to the PRIMARY MENU.
2. Press **PF3** again, and you see a blank screen with the message -- CD TRANSACTION ENDED -- in the upper left corner.
3. Type CESF LOGOFF and press **Enter**.

Chapter 10

Copying a File Using CICS

Use the COPY FILE BETWEEN NODES screen to specify general information for your COPY operation, such as the sending and receiving nodes and the start time and start date. To copy a file between nodes the following must be true:

- You must be authorized to perform COPY Processes on both nodes
- You must have access to the appropriate files on both nodes
- Both nodes must be active
- All interfaces must be started

Understanding the Copy Files Menus

The Copy File menus are a series of panels that collect information used for copying files between nodes. You can use the following four screens to build a COPY Process:

Screen Name	Description
COPY FILE BETWEEN NODES Menu	Specifies the sending and receiving nodes of the COPY and the submission parameters for your COPY Process.
Security Override Menu	Collects information about userid, password, and accounting data. This optional panel is displayed only if you request it on the first panel.
SENDING FILE Menu	Collects information for the Process variables for the sending file.
RECEIVING FILE Menu	Collects the information for the Process variables for the receiving file.

The relationship of these four panels is illustrated in the following diagram.

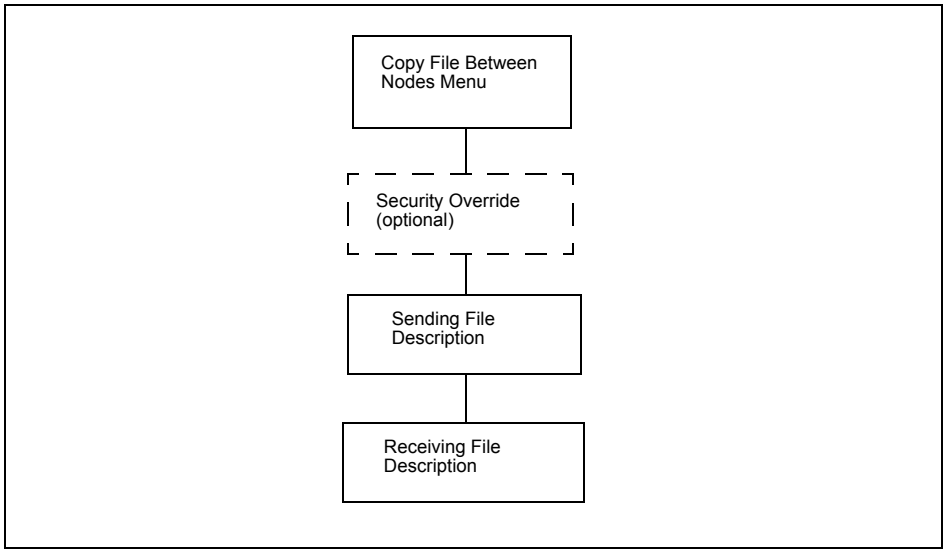

Generating a Copy File from Connect:Direct for CICS

To generate a copy file from the CICS interface, complete the following steps:

1. To access the COPY FILE BETWEEN NODES first screen, select option **CF** on the PRIMARY MENU and press **ENTER**.

```
                         COPY FILE BETWEEN NODES                 15:34:14
                                                          node.name

                    NODE NAME              DESCRIPTION
               01   MSDOS.NODE         -   MS-DOS NODE
               02   MVS.NODE           -   MVS NODE
               03   NETWARE.NODE       -   NETWARE NODE
               04   OS2.NODE           -   OS/2 NODE
               05   OS400.NODE         -   OS/400 NODE
               06   VSE.NODE           -   VSE DTF
               07   TANDEM.NODE        -   TANDEM NODE
               08   UNIX.NODE          -   UNIX NODE
               09   VM.NODE            -   VM NODE
               10   VMS.NODE           -   VMS NODE
               11   WINDOWS.NT.NODE    -   WINDOWS NT NODE
               12   OS/390.NODE        -   OS/390 NODE

SENDING NODE NUMBER  => __   or NODE NAME=> ________________   ENV=> ________
RECEIVING NODE NUMBER=> __   or NODE NAME=> ________________   ENV=> ________



PF   keys:  1 Help   2 Msg   3 Exit   4 Menu   6 Id   7 Bwd   8 Fwd
```

The top half of the COPY FILE screen presents a scrollable list of all the Connect:Direct nodes that can participate in a COPY FILE Process (as defined in the CONFIGURATION file by the administrator). The list consists of a symbolic node name, a descriptive node name, and a node selection number.

2. Specify the copy file sending and receiving nodes by selecting the corresponding node selection numbers. If you do not see the node that you need, press **PF8** to scroll the data forward in the list and press **PF7** to scroll the data backward.

   When specifying a sending or a receiving node, you have two options:

   - You can use the number from the scrollable list
   - You can use the node name and the environment

Note: If you do not provide this information, the default is the node that you are currently signed on to.

The ENV field is updated automatically when you type the node number or node name from the scrollable list, but you *must* fill in the ENV field manually if the node name is not in the list.

The current node (as determined from the Network Map) is highlighted in the list and you must select it as the sending or receiving default node. You can save the node choice numbers and display them again the next time you enter this screen.

If the COPYFILE node is not listed, then you must type both the copy node names and environment types.

Note: The nodes in the scrollable list must be added using the CDA transaction. (See the *Connect:Direct for z/OS Administration Guide.*)

The following table defines each entry field.

Entry Field	Description
SENDING NODE NUMBER	This 2-character field contains the sending node number. In the scrollable field to the left of the node name field are listed the associated node numbers. If you specify neither, the sending node defaults to the node you are signed on to. When you identify the sending node and press **ENTER**, the environment field is filled with the appropriate sending node.
SENDING NODE NAME	This 16-character field contains the sending node name.
SENDING ENV	This 8-character field contains the sending environment. If you do not select from the list, you must specify the environment. Valid sending environments for Connect:Direct for CICS are OS/390, VSE, VM, VMS, Tandem, OS/400, UNIX, and Windows (for Windows NT).

Entry Field	Description
RECEIVING NODE NUMBER	This 2-character field contains the receiving node number. In the scrollable table to the left of the node name field the associated node numbers are listed. If you specify neither, the receiving node defaults to the node that you are signed on to. When you identify the receiving node and press **ENTER**, the environment field is filled with the appropriate receiving node.
RECEIVING NODE NAME	This 16-character field contains the receiving node name.
RECEIVING ENV	This 8-character field names the receiving environment. Valid receiving environments for Connect:Direct for CICS are OS/390, VSE, VM, VMS, Tandem, OS/400, UNIX, and Windows (for Windows NT).

After the successful submission of the COPY FILE Process, this first screen in the panel series is redisplayed and a PROCESS NUMBER message is displayed. The PROCESS NUMBER message contains the number assigned to your Process by Connect:Direct.

3. After you provide the sending and receiving node names, press **ENTER** to continue to the next panel.

```
                          COPY FILE BETWEEN NODES                  15:36:47
                                                                 node.name

SENDING NODE NUMBER  => VSE.NODE      ENV=> VSE
RECEIVING NODE NUMBER=> OS390.NODE    ENV=> OS390

NEW PROCESS NAME=>  COPYCF__
CLASS            =>  ___       (NUMERIC)
HOLD             =>  N         (Y, N, or C-Call)
PRIORITY         =>  __        (RANGE: 0 to 15)
REQUEUE          =>  N         (Y or N)
RETAIN on TCQ    =>  N         (Y, N, OR I-Initial)
START DATE       =>  _________          START TIME=> ___________ (HH:MM:SSXM)
CHECKPOINT       =>  _______   (BYTE INTERVAL - nK|nM)
PLEXCLASS        =>  _________  _________  (PNODE SNODE)
COMPRESS         =>  N____      (Y, N, E-Extended, X'xx', or C'c')
OVERRIDE SECURITY=>  N         (Y or N)

Do you want values for this copy to be CASE sensitive? ==>  NO



PF keys:  1 Help   2 Msg   3 Exit   4 Menu   6 Id
```

With the second COPY FILE BETWEEN NODES screen you can specify the parameters of the copy. The following table describes the system fields for this screen. The system fields contain information specified from the previous menu.

System Fields	Description
SENDING NODE NUMBER AND NAME	This dual field contains the sending node name and environment that you provided in the previous screen.
RECEIVING NODE NUMBER AND NAME	This dual field contains the receiving node name and environment that you provided in the previous screen.

The system fields only display the information from the previous menu. Listed underneath the system fields are all of the parameters you can specify for the copy.

The following table describes each of the parameters you can specify for the copy.

Parameter	Description
NEW PROCESS NAME	This 8-character field contains your selection for a new unique Process name to be assigned to the COPY operation.
HOLD	This 1-character field contains the Y, N, or C toggle for a Process to be kept in the HOLD queue. This field is optional. **Y** (yes) holds the Process until it is deleted or released **N** (no) does not hold the Process (default) **C** (call) holds the Process in the Wait queue until the secondary node requests work. If the Process consumes computer resources during periods of heavy system use, you can place the Process temporarily in the Hold queue, and release it during a time of infrequent use.
PRIORITY	This 2-character field contains the priority number for Process execution. This field is optional. Valid priority numbers range from 0-15 (highest).
REQUEUE	This optional field specifies whether a copy step requeues if the Process terminates abnormally.
RETAIN on TCQ	This 1-character field contains the Y, N, or I toggle to keep a copy of a Process in a queue after execution. Filling this field is optional. **Y** (yes) keeps the Process in the queue after execution **N** (no) deletes the Process after execution **I** (initialize) schedules the Process for execution every time Connect:Direct is initialized
START DATE	This field contains the starting date for the copy operation expressed as month, day, and year. If you leave this field blank, the Process takes place on the current date. Fill in this field if you want to start the Process at some future time.

Parameter	Description
START TIME	This 10-character field contains the starting time for the copy operation expressed as hours, minutes, and seconds, AM or PM (HH:MM:SSXM). The default is a 24-hour clock. If a 12-hour clock is used, the AM or PM is required. The starting time works in conjunction with the starting date, but the field is optional. If you do not specify a time and the date is the current day, the Process begins immediately. If the date is set for a future date and the START TIME is not specified, the Process begins at 12:00 AM. The START TIME field is optional. Use this field if you want to start the Process at some future time.
CHECKPOINT	The CHECKPOINT field specifies the byte interval for checkpoint support, which enables restart of interrupted transmissions at the last valid transmission point. This feature avoids the need to restart transmission from the beginning. K denotes thousands; M denotes millions. A checkpoint value of zero stops automatic checkpointing.
PLEXCLASS	The PLEXCLASS field specifies the class that directs the Process to only certain servers in a Connect:Direct/Plex. Only use this parameter in a Connect:Direct/Plex. Each server in a Connect:Direct/Plex can be designated to support only certain PLEXCLASSes through the CDPLEX.PLEXCLASSES initialization parameter. Processes can then be limited to only those servers by specifying the PLEXCLASS in the Process definition. The PNODE class controls which Connect:Direct/Server runs the Process. The SNODE class controls what other node is used with the Process. The PNODE class and SNODE class are each 1–8 characters long. Use an asterisk (*) to indicate that the Process can run on any server with an asterisk designated in the CDPLEX.PLEXCLASSES initialization parameter. If no PLEXCLASS is specified, the Process runs on any Connect:Direct/Server that supports PLEXCLASS. If a Process must run on a specific Connect:Direct/Server, specify the Connect:Direct/Server name in this field. The Process runs only on that server.
COMPRESS	The COMPRESS field specifies that Connect:Direct is to compress the data. This feature reduces the amount of data transmitted as the file copies from one node to another. Connect:Direct automatically decompresses the file at its destination. The default subparameter for the COMPRESS parameter is PRIMEchar=X'40'.
OVERRIDE SECURITY	If you want to type security information such as userid and password, type a Y at the OVERRIDE SECURITY prompt. Connect:Direct displays the SECURITY OVERRIDE screen. See page 65 for an example.
CASE Sensitive	Following this question, indicate whether you want to allow mixed case input. This option is available as a session default, and you can specify the option during signon. You can override the specified default on commands that apply to userid, password, and data set name. When you submit commands with YES specified, Connect:Direct includes the CASE=YES parameter with your command.

CICS only interprets mixed case data if your terminal is defined to accept it. The CICS RDO or CEDA definition must be defined with UCTRAN=NO for mixed case data to be input to Connect:Direct from a CICS terminal.

4. If you typed a **Y** at the Override Security prompt on the COPY FILE BETWEEN NODES screen, Connect:Direct displays the SECURITY OVERRIDE screen.

```
                          COPY FILE BETWEEN NODES                 17:28:36
                                                                 node.name
                             SECURITY OVERRIDE


SENDING NODE NAME   => AS400.NODE        ENV => AS400

SECURITY ID: ____________________________________________________________
PASSWORD   :
NEW PASSWORD:
ACCT DATA  : ____________________________________________________________


RECEIVING NODE NAME => OS390.NODE       ENV => OS390

SECURITY ID: ____________________________________________________________
PASSWORD   :
NEW PASSWORD:
ACCT DATA  : ____________________________________________________________




 PF keys:  1 Help   2 Msg   3 Exit   4 Menu   6 Id
```

The screen contains entry fields for both the sending and receiving nodes. The following table described each entry field.

Entry Field	Description
SECURITY USERID	This optional field specifies the 1-64 character security ID that passes to a security exit.
PASSWORD	This optional field specifies the 1-64 character current security password to pass to a security exit.
NEW PASSWORD	This optional field specifies the new 1-64 character security password to be passed to a security exit. The exit can change the current password to this value.
ACCT DATA	This optional field specifies accounting data to be passed to the security exit.

5. Specify the Sending Environment and Node Name. The values you place in the Sending Node Name fields and the corresponding Environment fields determine which Sending and Receiving screens display to complete your COPY statement.

   The SENDING FILE menu differs according to your environment. For example, the following figure shows the Sending File screen for OS/390.

```
                    COPYFILE - SENDING FILE (OS/390)            17:28:36
                                                              node.name
NODE NAME:   ____________________

SENDING DSNAME     =>  ____________________________________________
UNIT               => (_____________________________________)
VOLUME             => (_____________________________________________________)

SYSOPTS            =>  " ___________________________________________________
                         ___________________________________________________
                         ___________________________________________________
                         ___________________________________________________
                         ___________________________________________________"
PDS ONLY:
SELECTION CRITERIA => ____________________________________
                   => ____________________________________
                   => ____________________________________
                   => ____________________________________
REPLACE            => N (Y OR N)


PF keys:  1 Help   2 Msg   3 Exit   4 Menu   6 Id
```

The valid Environment values for sending COPY files are: OS/390, OS/400, WIN95, VM, VMS, VOS, VSE, TANDEM, and UNIX.

Note: For a complete description of the valid parameters of a COPY Statement and examples, see the Connect:Direct Processes Web site at http://www.sterlingcommerce.com/documentation/processes/processhome.html.

---

a. Fill in the appropriate values for the SENDING FILE screen.

Note: Use the **PF1** key to obtain Help on the field content of the different screens.

---

b. When you finish typing the values on the SENDING FILE screen, press **PF3** to return to the COPY FILE menu.

6. Specify the Receiving Environment and Node Name.

   The values you place in the Receiving Environment and Node Name fields determine which Receiving File screen is displayed. The RECEIVING FILE menu differs according to your environment.

For example, this display illustrates the Receiving File screen for OS/390.

```
                    COPYFILE - RECEIVING FILE (OS/390)            17:28:36
                                                                 node.name
NODE NAME           =>

RECEIVING DSNAME    =>   ____________________________________________

DISP     =>  ( NEW , CATLG )
UNIT     =>  ( ____________________________________ )
VOLUME   =>  ( ____________________________________________________ )
DCB      =>  ( ____________________________________________________________ )
LABEL    =>  ( ____________________________________ )
SPACE    =>  ( ____________________________________ )

TYPEKEY  =>    ________

SYSOPTS   =>  " ____________________________________________________
                ____________________________________________________
                ____________________________________________________
                ____________________________________________________
                ____________________________________________________"

PF keys:  1 Help   2 Msg   3 Exit   4 Menu   6 Id
```

a. Fill in the appropriate values for the SENDING FILE screen.

Note: Use the **PF1** key to obtain Help on the field content of the different screens.

b. When you finish typing the values on the RECEIVING FILE screen, press **PF3** to return to the COPY FILE menu.

7. Type SUBMIT on the command line and press **Enter** to submit your copy.

Copying a File from Your Node to Your Node

Use Connect:Direct for z/OS CICS to copy a file from your node back to your node, by performing the following tasks:

1. Select option **CF** from the PRIMARY MENU and press **ENTER** to display the COPY FILE BETWEEN NODES screen.

Note: You are signed on to an OS/390 node for this example. Ensure that your node name is in the node list at the top of the screen. If it does not display, ask the administrator to start your node on the network. Alternatively, you can type in your node number, node name, and environment directly.

2. Type in your node number in the SENDING NODE NUMBER field.
3. Type in your node number in the RECEIVING NODE NUMBER field and press **ENTER**.

4. After the prompt PRESS ENTER TO CONTINUE, ensure that all your entries are correct and press **ENTER**.
5. Assuming the sending file is cataloged, on the COPYFILE - SENDING FILE (OS/390) screen, type in the SENDING DSNAME and press **ENTER**.
6. On the COPYFILE - RECEIVING FILE (OS/390) screen, type in the RECEIVING DSNAME and press **ENTER**.
7. As soon as the Process is submitted to Connect:Direct, you see the first COPY FILE BETWEEN NODES screen with the PROCESS NUMBER message toward the bottom right of the screen. This number indicates the number assigned by Connect:Direct to your Process.
8. Press **PF4** to go to the PRIMARY MENU.
9. Select option **SP** to go to the SELECT PROCESS screen to check on the status of your Process.
10. On the SELECT PROCESS screen select option **O** for OPERATOR TABLE, select **A** for all queues, type in the PROCESS NUMBER you observed from the COPY FILE BETWEEN NODES screen, and press **ENTER** to display the status.

Chapter 11

Building, Modifying, and Submitting Processes through CICS

This chapter describes how to submit an existing Process through the CICS Interface.

Providing Submit Options

Use the SUBMIT PROCESS screen to execute a Process by identifying the Process name, secondary node, times and dates, priority, requeue, class, hold and retain status, and symbolic parameters. The Process is located in the local node Connect:Direct Process library.

You can specify symbolic parameters before you submit the Process to the Connect:Direct DTF for execution. The IUI then submits the Connect:Direct COPY Process to the connected Connect:Direct DTF (the DTF specified on the Connect:Direct for z/OS CICS signon). A PROCESS SUBMITTED message is returned after the Process is successfully submitted to the DTF.

To access the SUBMIT PROCESS screen, select option **SB** on the PRIMARY MENU screen and press **Enter**. Following is an example.

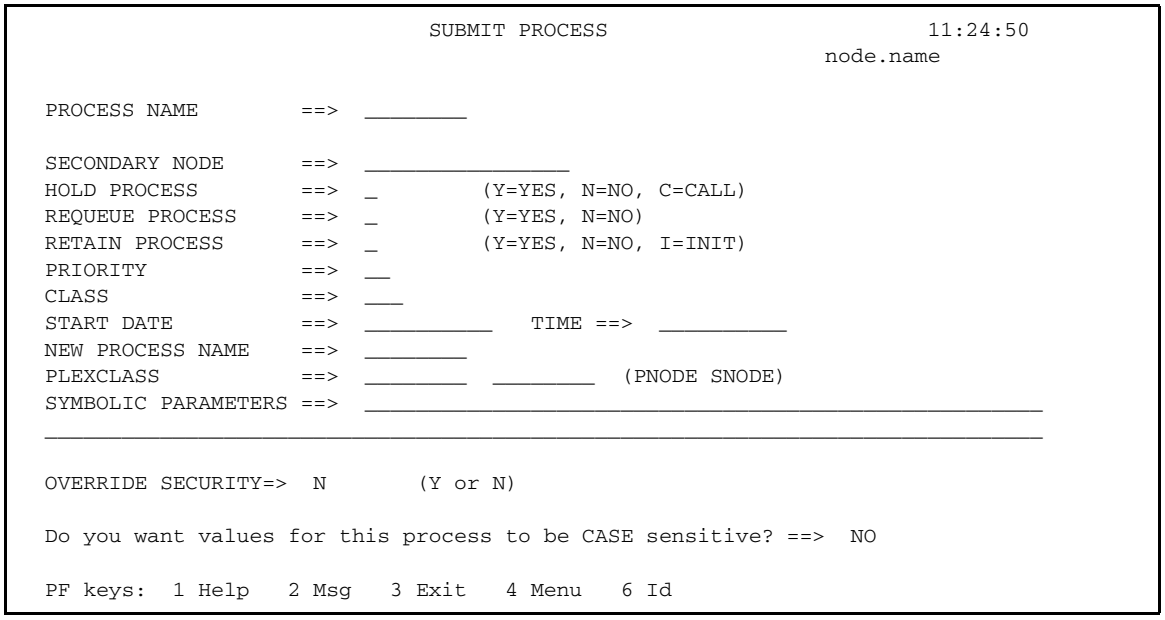

Entry Fields

The following table describes the Entry fields:

Field	Description
PROCESS NAME	This 8-character field contains the name of the Process to be submitted. This field is required.
SECONDARY NODE	This 16-character field contains the name of the secondary node (destination node) to which the Process is to be submitted. This field is optional. The value defaults to the SNODE specified in the Process.
HOLD PROCESS	This 1-character field contains the **Y**, **N**, or **C** toggle for a Process to be kept in the HOLD queue. This field is optional. ◆ **Y** (yes) holds the Process until it is deleted or released. ◆ **N** (no) does not hold the Process. This value is the default. ◆ **C** (call) holds the Process in the Wait queue until the secondary node requests work. If the Process consumes computer resources during periods of heavy system use, you can place the Process temporarily in the Hold queue, and release it during a time of infrequent use.
REQUEUE PROCESS	This optional field specifies whether a copy step requeues if the Process terminates abnormally.

Field	Description
RETAIN PROCESS	This 1-character field contains the **Y**, **N**, or **I** toggle to keep a copy of a Process in a queue after execution. This field is optional. ◆ **Y** (yes) keeps the Process in the queue after execution. ◆ **N** (no) deletes the Process after execution. ◆ **I** (initialize) schedules the Process for execution every time Connect:Direct is initialized.
PRIORITY	This 2-character field contains the priority number for Process execution. This field is optional. Valid priority numbers range from 0–15 (highest).
CLASS	This 3-character field contains the Process class assignment for a submitted Process. Filling the field is optional. Acceptable values range from 1–255.
TIME	This 10-character field contains the start time expressed as hours, minutes, and seconds AM or PM (HH:MM:SSXM). This field is optional. Enter the start time on the basis of a 12- or 24-hour clock. If AM or PM is not used, the default is a 24-hour clock (2:00 PM or 14:00).
NEW PROCESS NAME	This 8-character field contains a new name for a submitted Process. This field is optional.
PLEXCLASS = (pnode class, snode class)	Specifies the class that directs the Process to only certain servers in a Connect:Direct/Plex. This parameter is only used in a Connect:Direct/Plex. Each server in a Connect:Direct/Plex can be designated to support only certain PLEXCLASSes through the CDPLEX.PLEXCLASSES initialization parameter. Processes can then be limited to only those servers by specifying the PLEXCLASS in the Process definition. The PNODE class controls which Connect:Direct/Server runs the Process. The SNODE class controls what other node is used with the Process. The PNODE class and SNODE class are each 1-8 characters long. Use an asterisk (*) to indicate that the Process can run on any server with an asterisk designated in the CDPLEX.PLEXCLASSES initialization parameter. If no PLEXCLASS is specified, the Process runs on any Connect:Direct/Server that supports PLEXCLASS. If a Process must run on a specific Connect:Direct/Server, specify the Connect:Direct/Server name in this field. The Process runs only on that server.
SYMBOLIC PARAMETERS	This 2-line field contains the symbolic parameters that you want substituted for the items in the SUBMIT PROCESS operation. This field is optional. Enter the symbolics as follows: &PARAMETER=SUBSTITUTION, and so forth. You can specify as many symbolic parameters as fit on the lines provided. Each must be separated by at least one space.
SECURITY OVERRIDE	This optional field is for PNODE and SNODE security checking. Type a **Y** or **N**. You can check or modify security information on PNODE or SNODE on the Submit Process screen. Refer to *Overriding Security* on page 72.

Field	Description
CASE Sensitive	Following this question, indicate whether you want to allow mixed case input. This option is available as a session default, and you can specify the option during signon. You can override the specified default on commands that apply to userid, password, and data set name. When you submit commands with YES specified, Connect:Direct includes the CASE=YES parameter with your command. **Note**: CICS only interprets mixed case data if your terminal is defined to accept it. The CICS TCT MACRO or RDO TYPETERM definition must be defined with UCTRAN=NO for mixed case data to be input to Connect:Direct from a CICS terminal.

System Fields

The following table describes the System field.

Field	Description
PROCESS NUMBER *number*	This 21-character field contains the PROCESS NUMBER *number* message after the successful completion of a SUBMIT PROCESS task, where *number* is the system-generated Process number.

Overriding Security

The security override panel provides the opportunity to check or modify PNODE and SNODE security. This panel is displayed when you specify yes for the OVERRIDE SECURITY prompt of the SUBMIT PROCESS screen.

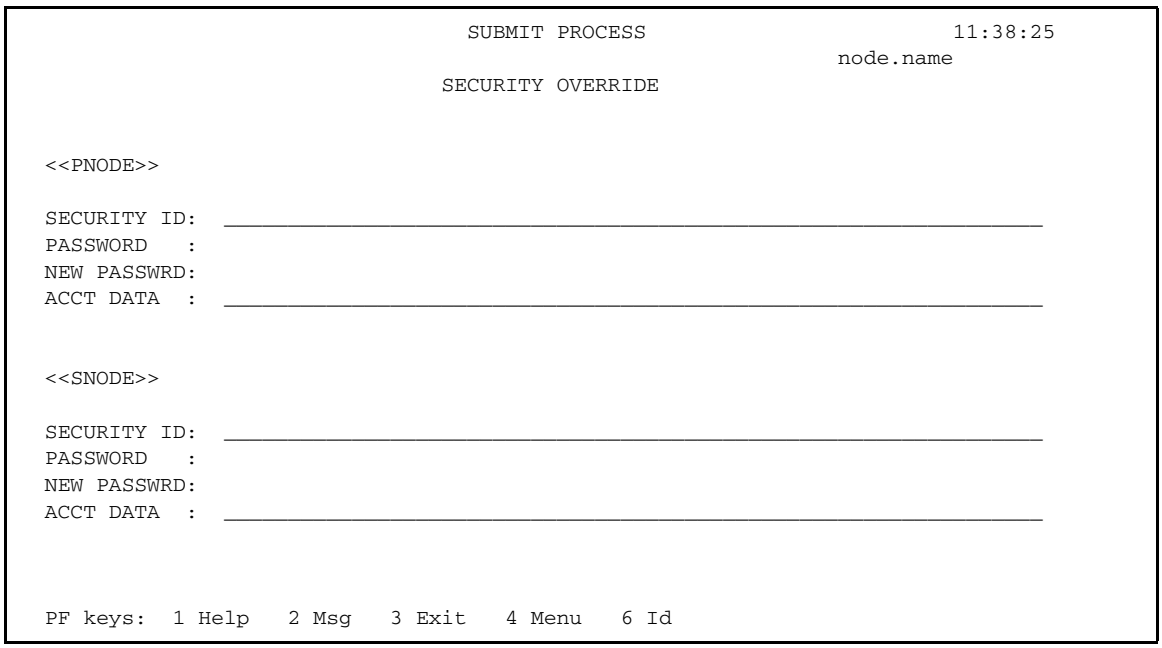

Entry Fields

The SUBMIT PROCESS SECURITY OVERRIDE screen contains the following entry fields, one set for the PNODE and one for the SNODE:

Field	Description
SECURITY USERID	This optional field specifies the 1–64 character security ID that passes to a security exit.
PASSWORD	This optional field specifies the 1–64 character current security password to pass to a security exit.
NEW PASSWORD	This optional field specifies the new 1–64 character security password to be passed to a security exit. The exit changes the current password to this value.
ACCT DATA	This optional field specifies accounting data to be passed to the security exit.

Chapter 12

Selecting a Process through CICS

This chapter describes how to use the SELECT PROCESS screen to view information about your Processes currently pending or executing, by identifying the name, or number, and queue, and by requesting a display or a printed report of the Process.

Note: After your Process completes execution, you are not able to view Process execution status details.

Determining the Status of a Submitted Process

This section describes how to access and use the SELECT PROCESS screen to view information about your Processes.

Accessing the SELECT PROCESS Screen

To access the SELECT PROCESS screen, select option **SP** on the PRIMARY MENU and press **Enter**.

Following is an example of the SELECT PROCESS screen.

```
                                SELECT PROCESS                    11:39:56
                                                                 node.name
OPTION ==> O       (O - OPERATOR TABLE    P - PRINT REPORT)

 QUEUE  ==> _   (A-ALL,W-WAIT,E-EXECUTE,H-HOLD,T-TIMER)

PROCESS NUMBERS:  ==> _______      ==> _______      ==> _______      ==> _______
PROCESS NAMES:    ==> _________    ==> _________    ==> _________    ==> _________
SERVER NAMES:     ==> _________    ==> _________    ==> _________    ==> _________

  STATUS:          (HO,HR,HI,HE,HC,HP,HS,RH,RA,WC,H,R,W)
    ==> __          ==> __          ==> __          ==> __
  DESTINATION NODES:
     ==> ________________          ==> ________________
     ==> ________________          ==> ________________
  USER ID:         NODE ID:
     ==>.node1
                     ==> node.name
     ==> ____________________________________________________________________
                     ==> ________________
Do you want values for this command to be CASE sensitive? ==> NO

PF keys:  1 Help   2 Msg   3 Exit   4 Menu   6 Id
```

Understanding the Entry Fields

The following table describes the entry fields on the SELECT PROCESS screen:

Field	Description
OPTION	This 1-character field contains the SELECT PROCESS screen option of your choice, as follows: Type **P** to prints a report on your default printer (defined in your signon defaults). Type **O** (alphabetic, not zero) to access the SELECT PROCESS - OPERATOR TABLE screen and create a 1-line summary of each selected Process.
QUEUE	This 1-character field contains your selection of the Process queues for display: **A** (to select all queues), **W** (for the Wait queue), **E** (for the execution queue), **H** (for the Hold queue), or **T** (for the Timer queue). This field is optional.
PROCESS NUMBERS	These four fields of six characters each contain the numbers of Processes to be selected. The field is optional. If you select nothing, all Processes in the selected queue are displayed.
PROCESS NAMES	These four fields of eight characters each contain the names of Processes to be selected. The field is optional. If you select nothing, all Processes in the selected queue are displayed.
SERVER NAMES	These four fields contain the Connect:Direct/Server names to select Processes from. The server name is a 1–8 character name assigned to each server in a Connect:Direct/Plex through the CDPLEX.SERVER initialization parameter. This field only applies to a Connect:Direct/Plex.

Field	Description
STATUS	This optional field indicates specific queue status selection by use of the following characters: **HO**, held by operator. The Process was submitted without hold specified and later was changed with the CHANGE PROCESS command. **HR**, held retain. The Process was submitted with RETAIN=YES specified. **HI**, held initially. The Process was submitted with HOLD=YES specified. **HE**, held in error. The Process was submitted, but the submitter is not defined on the SNODE. **HC**, held for call. The Process was submitted with HOLD=CALL specified. A session started from the other node causes this Process to be put on the wait queue in WC status. **HP**, held Process error. An error occurred during initiation of Process execution. This condition can occur if the session is lost before any Process Statements begin to execute. **HS**, held for suspension. The operator issued a SUSPEND PROCESS command. The Process can be released later. **RH**, restart Held. A checkpointed Process was executing when an error such as a lost session or an I/O error occurred. This enables the copy to be restarted when the session is lost and reestablished. **RA**, held for restart allocation error. During Process execution, an allocation error occurred matching those specified in the initialization parameters. This status enables the Process to be restarted after the allocation problem is resolved. **WC**, wait for connection. Session establishment attempted, including retries if specified, and failed. This Process is put on the wait queue and processed if a session with that node is established later. It can also be released by the operator. **WT**, wait for transport. The transport protocol is not available. The Process runs as soon as the transport protocol is available. **WX**, wait for server. The Process is waiting for an eligible Connect:Direct/Server to become available. The Process runs as soon as an eligible Connect:Direct/Server is available. An eligible Connect:Direct/Server is an active server that supports the Process PLEXCLASS and the transport protocol (SNA, TCP, or CTCA). The transport protocol must also be available on the server for it to be eligible. **H**, all Held Processes. This selection enables you to view a list of all held Processes from the Select Process screen. **R**, all restarted Processes. This selection enables you to view a list of all restarted Processes from the Select Process screen. **W**, all waiting Processes. This selection enables you to view a list of all waiting Processes from the Select Process screen.
DESTINATION NODES	This optional field indicates the destination site identifier (NODE NAME).
USER ID	This optional field is an alphanumeric userid corresponding to a selected Process.
NODE ID	This optional field identifies the submitter node corresponding to a selected Process. NODE ID is required if USER ID is specified.

Field	Description
Do you want values for this command to be CASE Sensitive?	Following this question, indicate whether you want to allow mixed case input. This option is available as a session default, and you can specify the option during signon. You can override the specified default on commands that apply to userid, password, and data set name. When you submit commands and specify YES, Connect:Direct includes the CASE=YES parameter with your command. **Note:** CICS only interprets mixed case data if your terminal is defined to accept it. The CICS RDO TYPETERM definition must be defined with UCTRAN(NO) for mixed case data to be input to Connect:Direct from a CICS terminal.

Viewing Summary Information

You can use the SELECT PROCESS - OPERATOR TABLE screen to view summary information about Processes pending or executing, including name, number, sending and receiving nodes, queue type and status, and last message received.

To access the Connect:Direct SELECT PROCESS - OPERATOR TABLE screen, select option **O** (alphabetic, not zero) on the SELECT PROCESS screen and press **Enter**. Following is an example of the Connect:Direct SELECT PROCESS - OPERATOR TABLE screen.

```
                        SELECT PROCESS - OPERATOR TABLE              11:02:05
                                                                  node.name

Cmd ProcName ProcNum Submitter Node   Secondary Node   QType  QStat  Last Msgid
--- -------- ------- ---------------- ---------------- -----  -----  ----------

 _  COPYNC   202     OS390.NODE         MVS.NODE        TIMER   WC

 _  COPYJC   203     OS390.NODE         MVS.NODE        TIMER   WC




Line commands:   M Last Msgid   S Select process detail

PF keys:  1 Help   2 Msg   3 Exit   4 Menu   6 Id                Enter Refresh
```

Understanding the Entry Fields

A description the entry field on the SELECT PROCESS - OPERATOR TABLE screen follows:

Field	Description
CMD	This 1-character field contains your line command options as follows: ◆ **M** - Selecting this option in the CMD field and pressing **Enter** displays the text of the last message received for this Process. ◆ **S** - Selecting this option in the CMD field, and pressing **Enter**, takes you to the SELECT PROCESS -- PROCESS DETAIL screen.

Understanding the System Fields

A description of each of the system fields on the SELECT PROCESS - OPERATOR TABLE screen follows:

Field	Description
PAGE XXXX OF YYYY	This 17-character field contains the current page number XXXX out of YYYY total pages of SELECT PROCESS -- OPERATOR TABLE data.
PROCNAME	This 9-character field contains the Process name.
PROCNUM	This 6-character field contains the Process number.
SUBMITTER NODE	This 16-character field contains the node name of the primary node.
SECONDARY NODE	This 16-character field contains the node name of the secondary node.
QTYPE	This 5-character field contains the type of queue: **EXEC** - Process is currently executing **HOLD** - Process is held **WAIT** - Process is waiting for execution **TIMER** - Process is to execute at a given time

Field	Description
QSTAT	This 2-character field contains the current status of the queue: **EX** - currently executing **HC** - is held for call **HE** - held in error **HI** - held initially **HO** - held by the operator **HP** - an error occurred during initiation of Process execution **HR -** submitted with RETAIN=YES **HS** - is held for suspension **RA** - is held for restart allocation error **RH** - is held for restart **RS** - is being restarted **WA** - is awaiting acknowledgement **WC** - is awaiting connection **WR** - is awaiting restart **WS** - is awaiting the designated start time **WT** - is awaiting transport protocol **WX** - is awaiting an eligible Connect:Direct/Server
LAST MSGID	This 8-character field contains the designation of the last message received for Connect:Direct for z/OS operations.

Viewing Process Detail

You can use the SELECT PROCESS - PROCESS DETAIL screen to view detailed information about pending or executing Processes selectively, by choosing any one of the Process details, such as name, number, queueing priority, schedule time, retain status, I/O bytes, and so forth.

To access the SELECT PROCESS - PROCESS DETAIL screen, select option **S** on the SELECT PROCESS -- OPERATOR TABLE screen and press **Enter**. Following is an example.

```
                          SELECT PROCESS - PROCESS DETAIL                 11:21:16
OPTION ==> S (M or S)                                                  node.name
  Options: M - Last Msgid; S - Select process detail                RECEIVING SIDE
 Process Name   => SEQ001     Number    => 3                Step   => STEP1
 Other Node     => SC.SC1.SWOOD2                           Status => EX
 Commid         => M5TST923                                Queue  => EXEC
 Function       => COPY       Sub State =>                State  => FILE I/O
 Server Name    => SDWSERV1   PLEXCLASS => ( *               )
 Submitter      => SC.SC1.SWOOD1
 Userid         => SYS002
 Scheduled Time =>            Date      =>                 Day    =>
 Queueing Prty  => 10         Class     => 1                Retain => NO
 Submitted Class=> NONE       Max Class => NONE            Sess.Id=> PNOD
 Session restrt => 0          Dyn restrt=> 0                RouteID=>
 Last Msgid     =>            Last RC   => 00000000        RetProc=>

 Sending File   => CSDQA1.TESTFILE.BENCH.M10
 Receiving File => SWOOD1.TEMPM10
 Volume seq no. => 1          Volser    => USER28          TTRN   => 000B0100
 Blks           => 23         Recs      => 0               RUs    =>
 I/O bytes      => 642,160                                 Member =>
 VTAM bytes     => 436,224                    Compression Factor =>

 PF keys:  1 Help   2 Msg   3 Exit   4 Menu   6 Id   Enter Refresh
```

Understanding the Entry Fields

The following table describes the entry field for the SELECT PROCESS - PROCESS DETAIL screen:

Field	Description
OPTION	This 1-character field contains your selected options **M** or **S**, as follows: ◆ Select the **M** option and press **Enter** to display the text of the last message received for this Process. ◆ Select the **S** option and press **Enter** to refresh the PROCESS DETAIL parameters.

Understanding the System Fields

The following table describes the system fields for the SELECT PROCESS - PROCESS DETAIL screen:

Field	Description
SIDE	This 14-character field contains the message SENDING SIDE if the PROCESS DETAIL parameters are from the sender and the message RECEIVING SIDE if the PROCESS DETAIL parameters are from the receiver. The field occurs in the upper right corner below the NODE field.
PROCESS NAME	This 8-character field contains the name of the selected Process.
NUMBER	This 6-character field contains the Process number.
STEP	This 8-character field contains the name of the currently executing step of the selected Process.
OTHER NODE	This 16-character field contains the name of the node identified as the destination of the Process.
STATUS	This 2-character field contains the status of the selected Process: **EX** - currently executing **HC** - is held for call **HE** - held in error **HI** - held initially **HO** - held by the operator **HP** - an error occurred during initiation of Process execution **HR** - submitted with RETAIN=YES **HS** - is held for suspension **RA** - is held for restart allocation error **RH** - is held for restart **RS** - is being restarted **WA** - is awaiting acknowledgement **WC** - is awaiting connection **WR** - is awaiting restart **WS** - is awaiting the designated start time **WT** - is awaiting transport protocol **WX** - is awaiting an eligible Connect:Direct/Server
COMMID	This 8-character field contains the APPLID (application identification) of the destination Connect:Direct node.
QUEUE	This 5-character field contains the name of the queue where the selected Process resides: WAIT, TIMER, EXEC, or HOLD.
FUNCTION	This 8-character field contains the name of the function being performed by the Process.
SUB STATE	This 12-character field contains the name of the current session macro in execution.

Field	Description
STATE	This 8-character field contains the current state of the Process.
SERVER NAME	The name of the Connect:Direct/Server where the Process runs. This field only applies to a Connect:Direct/Plex.
PLEXCLASS	The class that directs the Process to only certain servers in a Connect:Direct/Plex. This field only applies to a Connect:Direct/Plex.
SUBMITTER	This 16-character field contains the name of the submitting node.
USERID	This 8-character field contains the userid that submitted the Process.
SCHEDULED TIME	This 8-character field contains the time when the Process is scheduled to execute.
DATE	This 8-character field contains the date when the Process is scheduled to execute.
DAY	This 10-character field contains the name of the day when the Process is scheduled to execute.
QUEUEING PRTY	This 3-character field contains the queueing priority of the selected Process. The range of priorities is 0–15 (highest).
CLASS	This 4-character field contains the class or parallel session used.
RETAIN	This 4-character field contains YES or NO to indicate the retain status.
SUBMITTED CLASS	This 4-character field contains the submitted class.
MAX CLASS	This 4-character field contains the maximum number of parallel sessions allowed.
SESS. ID	This 4-character field contains the session ID (P for SNA primary and S for SNA secondary).
SESSION RESTRT	This 3-character field contains the number of consecutive session attempt failures.
DYN RESTRT	This 3-character field contains the number of failed attempts to perform a copy to an unavailable file.
ROUTEID	This 8-character field contains the userid to notify upon completion of a step or Process.
LAST MSGID	This 8-character field contains the last message number received by this Process. Selecting option **M** displays the text of the message.
LAST RC	This 8-character field contains the last step return code, if the Process went into execution.
RETPROC	The retained Process number.
SENDING FILE	This 44-character field contains the name of the sending file.
RECEIVING FILE	This 44-character field contains the name of the receiving file.
VOLUME SEQ NO	This 3-character field contains the volume sequence number.

Field	Description
VOLSER	This 6-character field contains the volume serial number.
TTRN	This 8-character field contains the TTR address (disk) or relative block (tape) currently accessed.
BLKS	This 9-character field contains the number of blocks sent or received.
RECS	This 14-character field contains the number of records sent or received as a result of the Process.
RUS	This 9-character field contains the number of request units sent or received.
I/O BYTES	This 22-character field contains the number of bytes read or written from external storage.
MEMBER	This 8-character field contains the name of the copied member during a PDS copy operation.
VTAM BYTES	This 22-character field contains the number of bytes transmitted.
COMPRESSION FACTOR	This 6-character field contains the percentage of savings from the use of data compression from a copy Process.

Chapter 13

Selecting Statistics through CICS

Use the SELECT STATISTICS screen to view Process statistics, by choosing any combination of Process names, numbers, start and stop times and dates, and condition codes. Process statistics summarize the Connect:Direct Process execution event log information for a DTF.

Viewing Process Statistics

To access the Connect:Direct SELECT STATISTICS screen, select option **SS** on the PRIMARY MENU and press **ENTER**. Following is an example.

```
                          SELECT STATISTICS                      11:34:47
                                                               node.name
OPTION ==> _

PROCESS NUMBERS:
     ==> _______          ==> _______         ==> _______      ==> _______
PROCESS NAMES:
     ==> _________        ==> _________       ==> _________    ==> _________

START DATE             ==> _________
START TIME             ==> _____________    (HH:MM:SSXM)
STOP DATE              ==> _________
STOP TIME              ==> _____________    (HH:MM:SSXM)
CONDITION CODE         ==> __ ___________
EXCLUDE MEMBER RECS    ==> N                (Y OR N)
EXCLUDE WTO RECS       ==> Y                (Y OR N)

OPTIONS: S ... SUMMARY TABLE
         P ... PRINT REPORT


PF keys:  1 Help   2 Msg   3 Exit   4 Menu   6 Id
```

Understanding the Entry Fields

The following table describes the entry fields for the SELECT STATISTICS screen:

Field	Description
OPTION	This 1-character field contains the **S** or **P** option as follows: ◆ Type **S** to access the SELECT STATISTICS - SUMMARY TABLE screen where a summary of Process statistics are displayed. ◆ Type **P** to generate a printed report of the Process statistics on the printer (defined in your signon defaults).
PROCESS NUMBERS	These four fields of eight characters each contain the numbers of Processes selected for statistical information. You can type one to four Process numbers for statistics selection.
PROCESS NAMES	These four fields of eight characters each contain the names of Processes selected for statistical information. You can type one to four Process names for statistics selection.

Field	Description
START DATE	This 8-character field specifies the date from which the statistics records are selected. You can specify the day (D), month (M), and year (Y). To specify the order of a Gregorian day, month, and year, you *must* define the DATEFORM initialization parameter. If you do not specify the DATEFORM parameter, Connect:Direct for z/OS defaults to MDY date format. After you have specified the order in the DATEFORM initialization parameters, you can use the following formats according to the order you selected: **DATEFORM=MDY** specifies the use of the following formats: mmddyy *or* mmddyyyy mm/dd/yy *or* mm/dd/yyyy mm.dd.yy *or* mm.dd.yyyy **DATEFORM=DMY** specifies the use of the following formats: ddmmyy *or* ddmmyyyy dd/mm/yy *or* dd/mm/yyyy dd.mm.yy *or* dd.mm.yyyy **DATEFORM=YMD** specifies the use of the following formats: yymmdd *or* yyyymmdd yy/mm/dd *or* yyyy/mm/dd yy.mm.dd *or* yyyy.mm.dd **DATEFORM=YDM** specifies the use of the following formats: yyddmm *or* yyyyddmm yy/dd/mm *or* yyyy/dd/mm yy.dd.mm *or* yyyy.dd.mm Connect:Direct processes Julian dates the same as previous releases. The following formats are valid: yyddd *or* yyyyddd yy/ddd *or* yyyy/ddd yy.ddd *or* yyyy.ddd
START TIME	This 10-character field contains the start date expressed as hours, minutes, and seconds, and AM or PM (HH:MM:SSXM). You can specify either a 12-hour or 24-hour time or the words NOON or MIDNIGHT. If you use 12-hour time, designate AM or PM; if you do not, Connect:Direct for z/OS CICS assumes a 24-hour time format. Processes that started after the time specified are selected for reporting.
STOP DATE	This 8-character field specifies the date from which the statistics records are selected. Specify the day (D), month (M), and year (Y). To specify the order of a Gregorian day, month, and year, you *must* define the DATEFORM initialization parameter. If you do not specify the DATEFORM parameter, Connect:Direct for z/OS defaults to MDY date format. After you have specified the order, you can specify formats. See the START DATE field for a description of the formats that you can use.

Field	Description
STOP TIME	This 10-character field contains the stop date expressed as hours, minutes, and seconds AM or PM (HH:MM:SSXM). You can specify either a 12-hour or 24-hour time or the words NOON or MIDNIGHT. If you use 12-hour time, designate AM or PM; if you do not, Connect:Direct for z/OS CICS assumes a 24-hour time format. Processes that started before the time specified are selected for reporting.
CONDITION CODE	This dual field contains the condition code for the selected Process; the first 2-character field contains a logical operator (LT, LE, GT, GE, NE, or EQ); and the second 8-character field contains the condition code to be checked. If a condition code is specified, all Processes terminating with the specified code are selected for reporting.
EXCLUDE MEMBER RECS	This 1-character field contains the Y or N toggle to include or omit member records from PDS copy statistical information.
EXCLUDE WTO RECS	This 1-character field contains the Y or N to include or omit Write To Operator records in the displayed statistical information. If you do not want WTO records to be displayed, select **Y**; if you do, select **N**.

Viewing Statistics Summary Information

Use the SELECT STATISTICS - SUMMARY TABLE screen to view a list of Process statistics, including function type, Process name and number, sending and receiving nodes, last message received, end time and date, and the return code.

To access the SELECT STATISTICS - SUMMARY TABLE screen, select option **S** on the SELECT STATISTICS screen, and press **ENTER**. Following is an example.

```
                      SELECT STATISTICS - SUMMARY TABLE              17:36:45
                                                                   node.name
Cmd Function ProcName ProcNum  Submitter Node   Secondary Node   Last Msgid RC
(M)   Submitter P/Snode End date  End time
--- ------------------------------------------------------------------------
 _  SUB-CMD  COPYNC   0        OS390.NODE       OS390.NODE       SPQL001I   0C
      OPER      PNODE   05/05/1998  12:37:46
 _  SUB-CMD  FROMMVS  0        OS390.NOD        OS390.NODEE      SPQL001I   0C
      OPER      PNODE   05/05/1998  12:40:06
 _  SUB-CMD  FROMMVS  0        OS390.NOD        OS390.NODEE      SPQL001I   0C
      SCIVSE5   PNODE   05/05/1998  12:44:19
 _  SUB-CMD  FROMMVS  1        OS390.NOD        OS390.NODEE      SSPA001I   00
      SCIVSE5   PNODE   05/05/1998  12:59:05
 _  PROC-END FROMMVS  1        OS390.NOD        OS390.NODEE      ACF01012   0C
      SCIVSE5   PNODE   05/05/1998  12:59:20
 _  SUB-CMD  FROMMVS  2        OS390.NOD        OS390.NODEE      SSPA001I   00
      SCIVSE5   PNODE   05/05/1998  13:03:55
 _  COPY-END FROMMVS  2        OS390.NOD        OS390.NODEE      SCPA000I   00
      SCIVSE5   PNODE   05/05/1998  13:04:35
 _  PROC-END FROMMVS  2        OS390.NOD        OS390.NODEE      SVTM100I   00
      SCIVSE5   PNODE   05/05/1998  13:04:35
                                                              Page 1    of 42
SOPS000I - Select Statistics command successfully completed.

PF keys:  1 Help   2 Msg   3 Exit   4 Menu   6 Id           8 Fwd
```

Understanding the Entry Fields

The following table describes the entry field for the SELECT STATISTICS - SUMMARY TABLE:

Field	Description
CMD	Select **M** in this 1-character field, and press **ENTER** to go to the LAST MESSAGE screen and display the text of the last message received by the Process.

Understanding the System Fields

The following table describes the system fields for the SELECT STATISTICS - SUMMARY TABLE:

Field	Description
PAGE	This 17-character field contains the current page number and total pages of SELECT STATISTICS - SUMMARY TABLE data.
FUNCTION	This 9-character field contains the function designation for Connect:Direct for z/OS Process statistics.
PROCNAME	This 8-character field contains the Process name.
PROCNUM	This 6-character field contains the Process number.

Field	Description
SUBMITTER NODE	This 16-character field contains the node name of the primary node.
SECONDARY NODE	This 16-character field contains the node name of the secondary node.
LAST MSGID	This 8-character field contains the designation of the last message received by the Process.
RC	This 2-character field contains a system-generated return code as a result of the success or failure of your Process, as follows: ◆ **00** - Processes that completed successfully ◆ **04** - Processes that completed successfully and have one minor error such as an incorrect file disposition ◆ **08** - Processes that did not complete successfully but that have several errors ◆ **12** - Processes with major errors
SUBMITTER	This 8-character field contains the userid of the submitted Process.
P/SNODE	This 5-character field contains the primary or secondary node name designation, either PNODE or SNODE.
END DATE	This 8-character field contains the ending date of the displayed Process, expressed as month, day, and year (MM/DD/YY).
END TIME	This 8-character field contains the ending time of the displayed Process, expressed as hours, minutes, and seconds (HH:MM:SS).

Chapter 14

Displaying CICS Messages

Use the MESSAGE DISPLAY screen to view the contents of a message, the software module producing the message, some details of system action, and suggested response on your part.

Note: The CICS Interface messages use the prefix SCCS to distinguish them from non-CICS Connect:Direct messages.

Displaying Product Messages

The following section describes how to access the MESSAGE DISPLAY screen and the meaning of each field on the screen.

Accessing the MESSAGE DISPLAY Screen

To access the MESSAGE DISPLAY screen, select option **MD** on the PRIMARY MENU screen and press **ENTER**. The MD option is completed as part of CICS transaction processing and does not require access to the Connect:Direct DTF API. Following is an example.

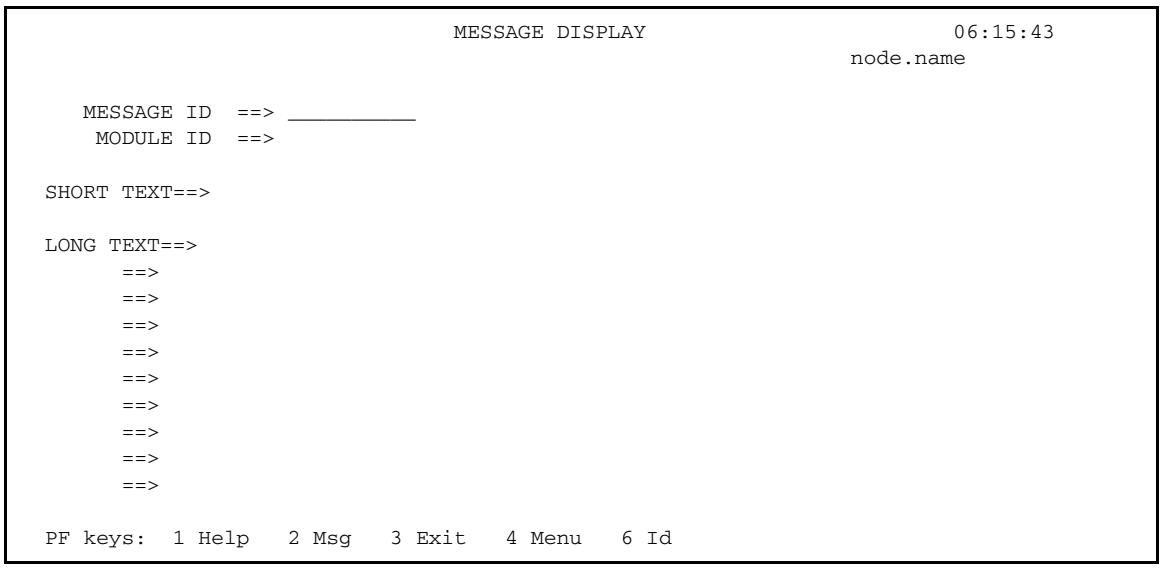

Understanding the Entry Fields

The following table describes the entry field for the MESSAGE DISPLAY screen:

Field	Description
MESSAGE ID	This 8-character field contains the message identification.

Understanding the System Fields

The following table describes the system fields for the MESSAGE DISPLAY screen:

Field	Description
MODULE ID	This 64-character field contains the name of the software module that produced the message.
SHORT TEXT	This 64-character field contains the short version of the message as it is displayed when sent.
LONG TEXT	These fields of twelve 64-character lines contain the long version of the message, with further descriptions of system action and suggested responses.

Displaying the Last Message

Use the LAST MESSAGE screen to recall and view the contents of the last message received during your Connect:Direct for z/OS CICS activities, the software module producing the message, some details of system action, and suggested response on your part.

Accessing the LAST MESSAGE Screen

To access the LAST MESSAGE screen you have the following two options:

- Select M in the CMD field of the SELECT STATISTICS -- SUMMARY TABLE screen, and press **ENTER**. The M command is completed as part of CICS transaction processing and does not require access to the Connect:Direct DTF API.
- Press **PF2** from any screen that defines **PF2**, except from the PRIMARY MENU where **PF2** is not displayed. The last message may have nothing to do with the current screen activities, when you press **PF2**.

Following is an example of the LAST MESSAGE screen.

```
                              LAST MESSAGE                          06:15:43
                                                                 node.name

   MESSAGE ID  ==> SAFA000I
    MODULE ID  ==> DMSGNON

SHORT TEXT==> Connect:Direct signon process completed.

 LONG TEXT==> Connect:Direct signon processing completed. The user
         ==> record was found on the Authorization Data Set. The user
         ==> supplied password was valid.
         ==>
         ==>
         ==>
         ==> SYSTEM ACTION: Return to invoker with RC=0.
         ==>
         ==>
         ==> RESPONSE: NONE.
         ==>
         ==>

PF keys:   3 Exit   4 Menu
```

Understanding the System Fields

The following table describes the system fields for the LAST MESSAGE screen:

Field	Description
HEADER	This 41-character field contains the system-generated message identification information and occurs right below the screen title. The HEADER field works in conjunction with the SELECT STATISTICS - SUMMARY TABLE screen and displays the current screen upon the selection of the line command **M** in the CMD field.
MESSAGE ID	This 8-character field contains the message identification number.
MODULE ID	This 64-character field contains the name of the software module issuing the message.
SHORT TEXT	This 64-character field contains the short version of the message as it is displayed when sent.
LONG TEXT	This field of 12 lines of 64 characters contains the long version of the message, with further descriptions of system action and suggested responses.

Chapter 15

Displaying Your CICS User Profile

This chapter describes how to use the USER INQUIRY screen to determine the characteristics of your user profile while using the CICS Interface. The information about your user profile is gathered from the existing Connect:Direct WHO and AUTH functions.

Accessing the User Profile

To access the USER INQUIRY screen, press **PF6** from any screen that defines **PF6**, except from the PRIMARY MENU, where **PF6** is not displayed. Following is an example of the USER INQUIRY screen.

```
                              USER INQUIRY                    17:45:32
                                                          node.name


CICS USERID             ==>  SYSA        Connect:Direct VERSION   ==>  VV
Connect:Direct USERID   ==>  SYSA        Connect:Direct RELEASE   ==>  RR
CICS LUNAME             ==>  BAN06061    Connect:Direct MOD-LEVEL ==>  MM
CICS TERMID             ==>  6061
Connect:Direct NODE     ==>  CD.ESA13

                        PRIMARY MENU OPTION           AUTH?
                        ---------------------         -----
                        CF  COPY FILE                  YES
                        SB  SUBMIT PROCESS             YES
                        SP  SELECT PROCESS             YES
                        SS  SELECT STATISTICS          YES
                        MD  MESSAGE DISPLAY            YES
                        SD  SIGNON DEFAULTS            YES
                        SN  CHANGE SIGNON              YES


PF keys:  3 Exit   4 Menu
```

System Fields

The following table describes the system fields:

Field	Description
CICS USERID	This 8-character field contains your CICS userid.
Connect:Direct USERID	This 8-character field contains your Connect:Direct userid.
CICS LUNAME	This 8-character field contains your CICS logical unit name (netname).
CICS TERMID	This 4-character field contains your CICS terminal designation.
Connect:Direct NODE	This 16-character field contains the name of the Connect:Direct node to which you are currently signed on.
Connect:Direct VERSION	This 2-character field contains the version number of the CICS Interface software you are using.
Connect:Direct RELEASE	This 3-character field contains the release number of the CICS Interface software you are using.
Connect:Direct MOD-LEVEL	This 3-character field contains the modification level number for the CICS Interface software you are using.
COPYFILE	This 3-character field contains YES or NO to show your authorization to perform a COPY operation.
SUBMIT PROCESS	This 3-character field contains YES or NO to show your authorization to submit a Process.
SELECT PROCESS	This 3-character field contains YES or NO to show your authorization to select a Process.
SELECT STATISTICS	This 3-character field contains YES or NO to show your authorization to select statistics.
MESSAGE DISPLAY	This 3-character field contains YES or NO to show your authorization to display messages.
SIGNON DEFAULTS	This 3-character field contains YES or NO to show your authorization to update your signon defaults record.
SIGNON	This 3-character field contains YES or NO to show your authorization to change your signon.

Appendix A

CICS Messages and Problem Isolation

This appendix contains the following two sections:

- Messages that can occur during your CICS Interface operations
- Basic troubleshooting tips for general software problems

Product Messages

This section contains messages from the system software arranged in alphabetical order.

Activate rejected, node is already active - *node name*
This message is displayed if you select option A in the field beside an active node.

All values reset from config file
This message is displayed if you press **Clear**.

All values reset from signon defaults file
This message is displayed if you press CLEAR on the SIGNON DEFAULTS screen.

A printer must be specified in your Signon Defaults in order to use 'P'
This message is displayed if you forgot to type in a printer ID, before you selected option **P**, and then pressed **Enter**.

Auto-return in progress...
This message is displayed after you exited the Connect:Direct for z/OS CICS program, and retyped the Connect:Direct transaction. The automatic return feature must be enabled before any use, however.

CICS USERID required
This message is displayed if you pressed **Enter** with a blank screen present or with no CICS USERID entry present.

Control record successfully updated
This message is displayed after an edit session when you press **PF9**.

DTF NODE NAME required
This message is displayed if you pressed **Enter**, or **PF5**, or **PF6**, with a blank screen.

End of file
This message is displayed when you scroll forward to the bottom of the file through repeated use of the **PF8** key.

End of file; values read from config file
This message is displayed when you scroll forward to the end of file and then press **PF8**.

End of file; values read from signon defaults file
This message is displayed if you press **PF8** repeatedly and attempt to access data beyond the end of file.

End of node list
This message is displayed if you press **PF8** while you are at the bottom of the available node list.

FILENAME and FILETYPE are required
This message is displayed if you pressed **Enter** on a blank screen, without typing the filename and type of file.

First page
This message is displayed if you press **PF7** repeatedly on a screen with more than one page and attempt to go up past the first page.
beginning of the file.

Immediate shutdown rejected; interface is shut.
This message is displayed if option I is already selected, and the interface is already inactive.

Immediate shutdown started
This message is displayed if you select option **I**. The INTERFACE STATUS field changes to INACTIVE.

Interface has been started
This message is displayed if you select option **A** and press **Enter**.

Interface is already active
This message is displayed if you select option **A**, and the interface is already active or in the process of starting**.**

Interface must be active to start monitor.
This message is displayed if you select option **M**, and the interface is not active. You must select option **A** before option **M**.

Last Msgid field is blank
This message is displayed if you select the **M** option, and press **Enter**, with the LAST MSGID field blank.

Last page
This message is displayed if you press **PF8** repeatedly on a screen with more than one page and attempt to go down past the last page.

Left page
This message is displayed if you repeatedly press **PF10** and attempt to access data past the left edge of the screen.

Line command invalid
This message is displayed if you select a different line command other than those defined and press **Enter**.

M and S are the only valid line commands
This message is displayed, if you select a line command other than those defined in the CMD field and press **Enter**.

M is the only valid line command
This message is displayed if you type in a character other than M in the command line and press **Enter**.

Monitor has been started.
This message is displayed if you select option **M**.

Monitor is already running.
This message is displayed if option **M** is already selected and you select option **M** again.

MYNODE.OS.USERID NODE invalid
This message is displayed if the node name you typed in is not authorized for signon.

NETWORK NODE NAME required
This message is displayed if you press **Enter**, or **PF5**, or **PF6**, with a blank screen present or with the NETWORK NODE NAME field entry blank.

Network node successfully added - *node name*
This message is displayed when the DTF NODE RECORDS screen has your correct data in the fields, and you press **PF5**.

Network node successfully deleted - *node name*
This message is displayed when the DTF NODE RECORDS screen has your correct data in the fields, and you press **PF6**.

No active work queue entries for node *node name*
This message is displayed if you select option **W**, and no active subtasks are in the work queue.

Node activation started, node *node name*
This message is displayed if you select option **A** in the field beside an inactive node.

Node has been restarted - *node name*
This message is displayed in the STATUS ALERT MESSAGE field when the NETWORK NODE RECORDS have been updated to activate a node.

NODE invalid
This message is displayed if the node name you typed in is not authorized for signon.

NODE NUMBER invalid
This message is displayed if you typed in a node number that is not in the list of available nodes and pressed **Enter**.

NODE NUMBER or NODE NAME required
This message is displayed if you press **Enter**, with nothing typed in.

NODE required
This message is displayed if you pressed **Enter** on a blank screen without typing in a node name.

NODE TYPE invalid
This message is displayed if the DTF NODE NAME contains an unacceptable naming convention.

No help available
This message is displayed if you press **PF1** while at a screen with no online help facilities available.

No password is currently on file
This message is displayed in the Connect:Direct PASSWORD field if you typed an unacceptable or blank Connect:Direct PASSWORD.

Normal shutdown rejected; interface is inactive.
This message is displayed if already select option **S**, and you select option **S** again.

Normal shutdown started
This message is displayed if you select option **S**, press **Enter**. If you press **Enter** again, the MONITOR TASK NUMBER field changes to NOT RUNNING.

No signed-on users
This message is displayed if the administrative user selected line command **T** from the USER STATUS and pressed **Enter**, thereby terminating the administrative user session. This message is also displayed if you type **U** from the PRIMARY MENU and no signed-on users of Connect:Direct exist.

No users meeting selection criteria
This message is displayed if a CICS userid is typed in the CICS USERID field that did not match those users logged on. First, check the USER STATUS screen to see who is logged on for a match.

OPTION invalid
This message is displayed if you type in an option other than those defined on the PRIMARY MENU.

OPTION required
This message is displayed if you press **Enter**, without typing in an option.

Password is on file, but not displayed
This message is displayed if you type a Connect:Direct password that is already in the SIGNON DEFAULT record.

Password is present
This message is displayed if the PASSWORD field on the SIGNON DEFAULTS screen is filled with your password. The PASSWORD field is darkened to maintain security.

Password is absent
This message is displayed if you have not typed your PASSWORD in the field on the SIGNON DEFAULTS screen. As soon as you type the password, the rest of the required data, and press **Enter**, the message changes to PASSWORD IS PRESENT.

Past end of file - 'Prev' not available
This message is displayed when you scroll backward to the top of the file and then press **PF7**.

PF key invalid
This message is displayed in the MESSAGE field if you pressed a PF key other than those defined on the screen.

Press Enter to continue
This message is displayed if you typed in all required data correctly and pressed **Enter**. This message indicates your chance to abort the COPY file Process.

PROCESS NAME required
This message is displayed if you pressed **Enter** without typing in the Process name.

PROCESS NUMBER *number*
This message is displayed after a successful execution of a COPY file Process, where *number* is the system-generated Process number.

Record cannot be deleted, it is not on file
This message is displayed if you type in the DTF NODE NAME and then press **PF6**. No match exists between the DTF NODE NAME and those specified in the configuration file, and therefore the record cannot be deleted.

Record cannot be updated, it is not on file
This message is displayed if you type in the DTF NODE NAME and then press **PF9**. No match exists between the DTF NODE NAME and those specified in the configuration file, and therefore the record cannot be updated.

Record not found; hit any key when ready.
This message is displayed if you type in the DTF NODE NAME and press **Enter**, but no match exists in the DTF NODE RECORDS screen.

Right page
This message is displayed if you repeatedly press **PF11** and attempt to access data past the right edge of the screen.

SAFA000I - Connect:Direct signon process completed.
This message is displayed if you signed on successfully.

SCBI190I - Process specified not in process library.
This message is displayed if you typed in a Process name that is not recognized by the system, and pressed **Enter**. Check the contents of your PROCESS.LIB to determine those available.

SCIA011I - Connect:Direct/DTF not active. Extended Submit Facility now available.
This message is displayed if the DTF is not working under Connect:Direct. ESF is a substitute for the DTF in this case, but is limited to one Process per user.

SCCS002I - No room available on work queue for this node. The Connect:Direct for CICS work queue for this DTF node is full.
This message is displayed when the work queue reaches its maximum capacity of tasks. Try your request again at a lower usage time.

SCCS003I - Connect:Direct for CICS monitor is not active.
This message is displayed when the CDM transaction is not running.

SCCS007I - DTF node not active to Connect:Direct for CICS.
This message is displayed if the node name you typed in is not active in the Connect:Direct system.

SCCS007I - DTF node not active to Connect:Direct CICS.
This message is displayed if the node name you typed in is not active in the Connect:Direct system. If you are an administrator, check the NODE STATUS screen.

SCCS008I - Connect:Direct for CICS signon failure.
This message is displayed when a system logic error prevented your Connect:Direct for z/OS CICS signon.

SCCS009I - Connect:Direct for CICS connection to DTF node is being shut.
This message is displayed when the logical connection from Connect:Direct for z/OS CICS to the DTF node is being shut down.

SCCS010I - Connect:Direct for CICS has been shut down.
This message is displayed when the Connect:Direct for z/OS CICS interface has been shut down by a system administrator, without waiting for active requests to complete execution.

SCCS011I - Connect:Direct for CICS subtask has been shut.
This message is displayed when the Connect:Direct for z/OS CICS subtask assigned to process your request has been shut down, without waiting for active requests to complete execution.

SCCS013I - Copyfile successfully submitted.
This message is displayed if you typed in all the required data on the SENDING FILE screen and the RECEIVING FILE screen, and pressed **Enter**. You are returned to the COPYFILE screen from the RECEIVING FILE screen. The message is displayed only when a COPY file Process successfully completes under DTF.

SCCS014I - Output limit has been exceeded.
This message is displayed if the total number of lines returned to the DTF node exceeded the limit defined for the node during a SELECT operation.

SCCS016I - Connect:Direct for CICS connection to DTF node is being shut.
This message is displayed when the logical connection from Connect:Direct for z/OS CICS to the DTF node is being shut down.

SCCS018I - Request could not be assigned to a subtask.
This message is displayed if you typed in incorrect data or unknown data. The system could not place the signon request in the work queue assigned to the DTF node for the length of time required to complete the signon process. Number of maximum users was exceeded, or incorrect entries in the SIGNON DEFAULTS record caused the failure.

SCCS023I - DTF node now available in ESF mode only.
This message is displayed if the DTF is down.

SENDING DSNAME required
This message is displayed if you pressed **Enter**, without typed a filename.

Sending or receiving node must equal current node - MYNODE.OS.USERID
This message is displayed if you typed in a different node number from yours in the sending number field and pressed **Enter**.

SESF000I - Process successfully submitted via ESF.
This message is displayed if you typed in all the required data on the SENDING FILE screen and the RECEIVING FILE screen and pressed **Enter**. You are returned to the COPYFILE screen from

the RECEIVING FILE screen. The message is displayed only when you complete successfully a COPY file Process under ESF (when DTF is not working).

Shut immediate started, node *node name*
This message is displayed if you select option **I**, and you press **Enter** on an active node.

Shut normal started, node *node name*
This message is displayed if you select option **N**, and you press **Enter**, on an active node. The STATUS field changes to INACT, and the REQUEST field changes to SHUTNORM.

Shut rejected; node already inactive - *node name*
This message is displayed if you select option **S** and you press **Enter** on an inactive node.

Signon Defaults successfully updated - *userid*
This message is displayed if you press **PF9** while at the SIGNON DEFAULTS screen.

SOPA000I - Select process command was successful.
This message is displayed if you select option S and press **Enter**.

SOPA006I - No process(es) found matching the search criteria.
This message is displayed if you typed in values on the SELECT PROCESS screen, pressed **Enter**, and no match was found.

SOPA011I - One or more processes SELECTed.
This message is displayed if you press **Enter** without selecting a line command option.

SOPS000I - Select Statistics command successfully completed.
This message is displayed if you type in the correct data on the SELECT STATISTICS screen and press **Enter**.

SOPS006I - No statistics were found matching the criteria specified.
This message is displayed if you type in the correct data on the SELECT STATISTICS screen and press **Enter**, but there was no Process data in Connect:Direct for z/OS CICS that matched your data.

START DATE invalid
This message is displayed if you typed in a start date that is unrecognizable by Connect:Direct for z/OS CICS.

Start of file
This message is displayed if you scroll back to the top of the file through repeated use of the **PF7** key.

Start of file; values read from config file
This message is displayed when the you press **PF7** repeatedly to get to the top of the configuration file, then **PF8**, and then **PF7**.

Start of file; values read from signon defaults file
This message is displayed if you press **PF7** repeatedly and attempt to access data before the beginning of the file.

Start of node list
This message is displayed if you press **PF7** while you are already at the top of the available node list.

START TIME invalid
This message is displayed if you pressed **Enter**, with nothing typed in on the screen, or if you typed in a start time that is unrecognizable by Connect:Direct for z/OS CICS and pressed **Enter**.

UNSUPPORTED FUNCTION
This message is displayed if the CICS Interface is not started or if you typed in a command unknown to the system.

User does not have active work
This message is displayed if you select line commands **F** or **C** and no active subtask exists in the USER STATUS.

USS Command Completed Successfully
This message is displayed when the CICS signon is successful.

Value must be numeric if typed
This message is displayed if you typed in other characters than 0 to 9 and pressed **Enter**.

**Values read from config file * * * * *
This message is displayed if you press **PF9**. The screen is updated with the values recorded in the configuration file.

Note: The following message begins with a variable field and can change as the node names are changed.

***node name* not NETWORK NODE IN NETMAP specified**
This message is displayed if you type in the DTF NODE NAME and then press **PF5**. No match exists between the DTF NODE NAME and those specified in the NETMAP.

You must sign on to CICS before using Connect:Direct for CICS
This message is displayed in the STATUS ALERT MESSAGE field if you attempted to sign on to Connect:Direct before CICS.

Problem Isolation

This section contains suggested solutions to software problems.

DTF Busy Message

The terminal is clocked when you press a PF key or **Enter** on a Connect:Direct screen. If the processing of the Connect:Direct transaction requires communications with a Connect:Direct node, then your request is put into a CICS WAIT state.

The terminal clock is freed when the CICS Interface handles your request. The CICS Interface administrative function provides an inquiry capability for problem analysis in the event that the clock is not freed. A CICS Interface administrative function exists that aborts any specific Connect:Direct command that is in progress. This command frees the terminal clock and an error message is returned.

The Connect:Direct request is not cancelled, unless the request is not yet in progress, meaning that your request is allowed to complete, but the response is not sent back to you.

You cannot type another Connect:Direct command for the same node until the first request completes (only one command is allowed per user per node at a time).

CICS Transaction ABENDs

If a CICS transaction abends, then you are returned to CICS transaction mode. You can try to retype the transaction that abended, but you must start over, either on the SIGNON screen or on the PRIMARY MENU (if auto-signon is enabled).

In case the transaction abends while a Connect:Direct command is in process (because of a failure of the terminal, or because a CICS operator force-abended his transaction), the same situation occurs.

However, you cannot issue any further Connect:Direct requests until the prior request completes. Completion information from the outstanding request is not returned to you.

Your Terminal Hangs—No Response

CICS Interface requests are placed in a work queue, with one queue per node. Connect:Direct requests are rejected with a DTF busy error message, when a queue for a node reaches its maximum allowed length. If this condition occurs, contact your system administrator.

Index

A

A (Activate Interface) option 28

A (Activate) command 34

ABENDs 47

Accounting data for nodes 56

Accounting information 47

Activate (A) command 34

ACTIVATE ADMIN REQUEST field 34

Activate Interface (A) option 28

ACTIVE CICS STATUS field 34

ACTIVE TASKS field 27

ADMIN REQUEST field 33

Administration Node Status screen 33

Administration System 14

API, See Application Program Interface

Application Program Interface (API) 7, 30, 35

Architecture 7

AUTH function 95

Authorization
- bit mask 23, 46
- facility 46
- file 23

AUTO.SIGNON field 20

Auto-signon 52

Autostart 29

B

Bit Mask 23, 46

BLKS field 84

C

C (Configuration) option 15

C (Control record) option 19

C (Free User and Cancel User's Subtask) command 42

CA-ACF2 53

CASE Sensitive field
- Copy File screen 64
- Select Process screen 78
- Signon screen 52
- Submit Process screen 72

CA-Top Secret 53

CDA transaction 14, 47, 51, 61

CDE transaction 21

CDI transaction 21

CDM transaction 21

CDP transaction 21

CESF LOGOFF 57

CESN transaction 51

CF (Copy File) menu option 23

CF option 54, 60

Change Signon (SN) menu option 23

CHECKPOINT field 64

CICS ID field 36, 42

CICS Interface
- architecture 7
- autostart 29
- components 7
- control record 17
- DTF node records 17
- IUI 46
- network node records 18

CICS LUNAME field 96

CICS PRINTER field 38, 56

CICS STATUS field 33

CICS TERM field 36, 42

CICS TERMID field 16, 96

CICS terminal ID 41
CICS USERID field 16, 38
  Signon Defaults screen 56
  User Inquiry screen 96
CICSID keyword 46
CLASS field
  Select Process - Process Detail screen 83
  Submit Process screen 71
CMD field
  Select Process - Operator Table screen 79
  Select Statistics - Summary Table screen 89
Commands
  line 34, 42
  QUIESCE 31
  SHUTDOWN 31, 47
  SHUTDOWN IMMEDIATE 47
COMMID field 82
Components 7
COMPRESS field 64
COMPRESSION FACTOR field 84
CONDITION CODE field 88
Configuration (C) option 15
Configuration data sets 50
Configuration screen 18, 19
Connect:Direct
  Administration Configuration screen 18
  Administration Network Node Records screen 19
  Administration Primary Menu 14, 15, 23
  Administration Signon Defaults screen 37
  Administration User Status screen 41
  API 35
  Authorization Facility 46
  DTF API 30
  DTF log on 34
  security exit 23
Connect:Direct MOD-LEVEL field 96
Connect:Direct NODE field 16, 96
Connect:Direct PASSWORD field 38, 56
Connect:Direct RELEASE field 96
Connect:Direct USERID field 38, 56, 96
Connect:Direct VERSION field 96
Connect:Direct.EQ.CICSID field 20
Control Record 17
Control Record (C) option 19
Controller Subtask (CST) 29
Copy File
  CF option 60
  menu 62
Copy File (CF) menu option 23
Copy File Between Nodes
  entry fields 61
  screen 60
  security override fields 65
  system fields 63
Copy File Between Nodes screen 18
Copyfile - Receiving File screen
  OS/390 67
Copyfile - Sending File screen
  OS/390 65
COPYFILE field 96
Copying a file between nodes 59
CST (Controller Subtask) 18, 29
CST.RETRY.INTERVAL field 21
CURR CMD field 36
CURR TASKS field 33
CURR WORK field 33

D

D (DTF Node Records) option 19
Data Transmission Facility (DTF) 7
DATE field 9, 83
Dates
  processing 87
  specifying 87
DAY field 83
DEFAULT NODE field 38, 56
DESTINATION NODES field 77
DMGSECUR macro 46
DTF (Data Transmission Facility) 7

DTF NODE NAME field 24, 33, 42
DTF Node Records 17
DTF Node Records (D) option 19
DTF security exit 46
DUMMY ID FOR DTF SIGNON field 24
DYN RESTRT field 83

E

END DATE field 90
END TIME field 90
ENTRIES IN WORK QUEUE field 25
Entry fields
  AUTO.SIGNON 20
  CICS PRINTER 38
  CICS USERID 38
  CICS.TRANSACTION.CODE (ESS) 21
  CICS.TRANSACTION.CODE (MONITOR) 21
  CICS.TRANSACTION.CODE (PRINT) 21
  CICS.TRANSACTION.CODE (STARTUP) 21
  Connect:Direct PASSWORD 38
  Connect:Direct USERID 38
  Connect:Direct.EQ.CICSID 20
  CST.RETRY.INTERVAL 21
  DEFAULT NODE 38
  DTF NODE NAME 24
  DUMMY ID FOR DTF SIGNON 24
  ENTRIES IN WORK QUEUE 25
  ESF MODE ALLOWED 38
  ESF SIGNON ALLOWED 24
  ESF.RETRY.INTERVAL 22
  INACTIVE.INTERVAL 22
  MAX.SIGNON 22
  MAX.TASKS 22
  MAXIMUM WORKER SUBTASKS 25
  MONITOR.INTERVAL 22
  NETMAP DDNAME 24
  NETWORK NODE DESCRIPTION 25
  NETWORK NODE NAME 25
  NODE TYPE 25
  OUTPUT RECORD LIMIT 25
  PNODE ACCT DATA 38
  SESSION.RETRY.INTERVAL 21
  SIGNON.REENTRY 20
  SKIP.SIGNON.PANEL 21
  SLOW RESPONSE NOTIFICATION 25
  SNODE ACCT DATA 38
  STORAGE.SUBPOOL 22
  SUPPRESS CONNECTION AT STARTUP 24
  UPPER CASE PRINT 38
  WORK.RETRY.INTERVAL 22
ESF (extended submit feature) mode description 7, 31
ESF MODE ALLOWED field 38
ESF MODE field 9
ESF operation 53
ESF session 35
ESF SIGNON ALLOWED field 24
ESF.RETRY.INTERVAL field 22
EVENT RESTART file 49
EX status 80, 82
EXCLUDE MEMBER RECS field 88
EXCLUDE WTO RECS field 88
Exits
  Connect:Direct security 23
  DTF security 46
Extended Submit Facility (ESF)
  screen indication 9
  session mode 56
Extended Submit Feature (ESF) mode description 7, 31

F

F (Free User) command 42
Fields
  ACTIVE TASKS 27
  ADMIN REQUEST 33
  CICS ID 36, 42
  CICS PRINTER 38
  CICS STATUS 33
  CICS TERM 36, 42
  CICS TERMID 16
  CICS USERID 16, 38
  CICS.TRANSACTION.CODE (ESS) 21
  CICS.TRANSACTION.CODE (MONITOR) 21
  CICS.TRANSACTION.CODE (PRINT) 21
  CICS.TRANSACTION.CODE (STARTUP) 21
  Connect:Direct NODE 16
  Connect:Direct PASSWORD 38
  Connect:Direct USERID 38

Connect:Direct.EQ.CICSID 20
CST.RETRY.INTERVAL 21
CURR CMD 36
CURR TASKS 33
CURR WORK 33
DEFAULT NODE entry 38
DTF NODE NAME 24, 33, 42
DUMMY ID FOR DTF SIGNON 24
ENTRIES IN WORK QUEUE 25
ESF MODE ALLOWED entry 38
ESF SIGNON ALLOWED 24
ESF.RETRY.INTERVAL 22
INACTIVE.INTERVAL 22
INTERFACE STATUS 27
LAST REQUEST 43
LAST SIGNON 43
LAST TASK# 36, 43
MAX TASKS 33
MAX.SIGNON 22
MAX.TASKS 22
MAXIMUM WORKER SUBTASKS 25
MONITOR TASK MONITOR 27
MONITOR.INTERVAL 22
MSGID 43
NETMAP DDNAME 24
NETWORK NODE DESCRIPTION 25
NETWORK NODE NAME 25
NODE 36
NODE TYPE 25
OPTION 28
OPTION on Primary Menu 15
OUTPUT RECORD LIMIT 25
PAGE XX OF YY 36
PASSWORD MESSAGE 39
PENDING REQUEST 27
PNODE ACCT DATA entry 38
REQUEST DATE/TIME 36
SESS TYPE 33, 42
SESSION DATE/TIME OR SESSION MSGID 33
SESSION.RETRY.INTERVAL 21
SIGNON.REENTRY 20
SKIP.SIGNON.PANEL 21
SLOW RESPONSE NOTIFICATION 25
SNODE ACCT DATA entry 38
STATUS 42
STORAGE.SUBPOOL 22
SUPPRESS CONNECTION AT STARTUP 24
TD CTR 36, 43
UPPER CASE PRINT entry 38
USERID 36, 42
WORK TASK 36
WORK.RETRY.INTERVAL 22

File
authorization 22
EVENT RESTART 49
NETMAP 24, 45, 46
RPLERRCK 49
TCQ (Transmission Control Queue) 49
trace 49

Free User (F) command 42

Free User and Cancel User’s Subtask (C) command 42

Free User and Terminate User’s Signon (T) command 42

FUNCTION field 82, 89

Function keys 10

H

H status 77

HC status 77, 80, 82

HE status 77, 80, 82

HEADER field 94

HI status 77, 80, 82

HO status 77, 80, 82

HOLD field 63

HOLD PROCESS field 70

HP status 77, 80, 82

HR status 77, 80, 82

HS status 77, 80, 82

I

I (Interface Status) option 15

I (Shutdown Immediate) command 34

I (Shutdown Interface - Immediate) option 28

I/O BYTES field 84

INACT CICS STATUS field 34

INACTIVE.INTERVAL field 22

Interactive User Interface (IUI) 7, 45, 46

Interactive user Interface (IUI) 53

Interface
components 7
request management 30
startup 30
subtask management 30
tasks 29
VTAM session 31

Interface Status (I) option 15

INTERFACE STATUS field 27

IUI (Interactive User Interface) 7, 45, 46

L

Last Message
purpose 93
screen 93
system fields 94

LAST MSGID field 80, 83, 90

LAST RC field 83

LAST REQUEST field 43

LAST SIGNON field 43

LAST TASK# field 36, 43

Line commands 34, 42

Log on to Connect:Direct DTF 34

Logging information 47

LONG TEXT field
Last Message screen 94
Message Display screen 92

M

M (Start Monitor) option 28

Macros 46

Management
interface request 30
interface subtask 30

MAX CLASS field 83

MAX TASKS field 33

MAX.SIGNON field 22

MAX.TASKS field 22

MAXIMUM WORKER SUBTASKS field 25

MD (Message Display) menu option 23

MD option 54, 91

MEMBER field 84

Menu options
Change Signon (SN) 23
Copy File (CF) 23
Message Display (MD) 23
Select Process (SP) 23
Select Statistics (SS) 23
Signon Defaults (SD) 23
Submit Process (SB) 23

Menus 14, 15, 23

Message data set 49

Message Display
entry fields 92
field 96
MD option 91
screen 91
system fields 92

Message Display (MD) menu option 23

MESSAGE field 10

MESSAGE ID field
Last Message screen 94
Message Display screen 92

Mode, Extended Submit Feature (ESF) description 7

MODULE ID field
Last Message screen 94
Message Display screen 92

MONITOR TASK NUMBER field 27

MONITOR.INTERVAL field 22

MSGID field 43

Multiple Connect:Direct for DTFs signon 45

Multiple Connect:Direct nodes 54

Multiple terminal signon 54

N

N (Network Node Records) option 19

N (Node Status) option 15

NETDD parameter 48

NETMAP DDNAME field 24
NETMAP file 24, 45, 46, 49
Network map 30
NETWORK NODE DESCRIPTION field 25
NETWORK NODE NAME field 25
Network node records 18
Network Node Records (N) option 19
Network node records screen 19
NEW PROCESS NAME field
  Copy File Between Nodes screen 63
  Submit Process screen 71
NODE field 9, 36
NODE ID field 77
Node Status (N) option 15
Node Status screen 33
NODE TYPE field 25
Nodename 52
Nodes 15
Nodes List 61

O

OPTION field
  Primary Menu screen 54
  Select Process - Process Detail screen 81
  Select Process screen 76
  Select Statistics screen 86
OPTION fields 15, 28
Options
  Activate Interface (A) 28
  Configuration (C) 15
  Control Record (C) 19
  DTF Node Records (D) 19
  Interface Status (I) 15
  Network Node Records (N) 19
  Node Status (N) 15
  Shutdown Interface - Immediate (I) 28
  Shutdown Interface - Normal (S) 28
  Signon Defaults (S) 15
  Start Monitor (M) 28
  User Status (U) 15
OTHER NODE field 82
OUTPUT RECORD LIMIT field 25
OVERRIDE SECURITY field 64

P

P/SNODE field 90
PAGE field
  Select Process - Operator Table 79
  Select Statistics - Summary Table 89
PAGE XX OF YY field 36
Parameters
  API IOEXIT 50
  SIGNON 48
PASSWORD field 52
PASSWORD MESSAGE field 39
PENDING REQUEST field 27
PF Keys 10
PLEXCLASS field 64, 71, 83
PNODE 34
PNODE ACCT DATA entry field 38
PNODE ACCT DATA field 56
PRIM SESS TYPE field 34
Primary Menu options
  CF 54, 60
  MD 54
  SB 54
  SD 54
  SN 54
  SP 54
  SS 54
Primary menus 14, 15, 23
PRIORITY field
  Copy File Between Nodes screen 63
  Submit Process screen 71
Process data set 49
Process library 69
PROCESS NAME field
  Select Process screen 82
  Submit Process screen 70
PROCESS NAMES field
  Select Process Screen 76

Select Statisics screen 86

PROCESS NUMBER field
Select Process screen 82
Submit Process screen 72

PROCESS NUMBERS field
Select Process screen 76
Select Statistics screen 86

PROCNAME field
Select Process - Operator Table 79
Select Statistics screen 89

PROCNUM field
Select Process - Operator Table 79
Select Statistics screen 89

Q

QSTAT field 80

QTYPE field 79

QUEUE field 76, 82

QUEUEING PRTY field 83

QUIESCE command 31

R

R status 77

RA status 77, 80, 82

RACF 53

RC field 90

RECEIVING ENVIRONMENT field 62

RECEIVING FILE field 83

RECEIVING NODE NAME field 62

RECEIVING NODE NUMBER AND NAME field 63

RECEIVING NODE NUMBER field 62

RECS field 84

REQUEST DATE/TIME field 36

REQUEUE field
Copy File Between Nodes screen 63
Submit Process screen 70

Restricted options 53

RETAIN field 83

RETAIN ON TCQ field 63

RETAIN PROCESS field 71

RH status 77, 80, 82

ROUTEID field 83

RPLERRCK file 49

RS status 80, 82

RUS field 84

S

S (Shutdown Interface - Normal) option 28

S (Shutdown normal) command 34

S (Signon Defaults) option 15

SB (Submit Process) menu option 23

SB option 54

SCHEDULED TIME field 83

Screens
Administration Configuration 18, 19
Administration Network Node Records 19
Administration Node Status 33
Administration Signon Defaults 37
Administration User Status 41
Copy File Between Nodes 18, 60
Copy File Menu 62
Copyfile - Receiving File (OS/390) 67
Last Message 93
Message Display 91
Primary Menu 53
Security Override 64, 65
Select Process 75
Select Process--Operator Table 78
Select Process--Process Detail 80
Select Statistics 85
Select Statistics--Summary Table 88
Signon 51
Signon Defaults 55
Submit Process 69
User Inquiry 95

SD
Primary Menu option 54
Signon Defaults option 55

SD (Signon Defaults) menu option 23

SECONDARY NODE field
Select Process - Operator Table 79
Select Statistics screen 90

Submit Process screen 70
Security
external 53
signon 53
Security exit
Connect:Direct 23
DTF 46
SECURITY OVERRIDE field 71
Security Override screen 64, 65
Select Process
entry fields 76
Operator Table
entry fields 79
screen 78
system fields 79
Process Detail
entry fields 81
screen 80
system fields 82
screen 75
SP option 75
Select Process (SP) menu option 23
SELECT PROCESS field 96
Select Statistics
entry fields 86
option 85
screen 85
Summary Table
entry fields 89
screen 88
system fields 89
Select Statistics (SS) menu option 23
SELECT STATISTICS field 96
SENDING ENV field 61
SENDING FILE field 83
SENDING NODE NAME field 61
SENDING NODE NUMBER AND NAME field 63
SENDING NODE NUMBER field 61
SERVER NAME field 83
SERVER NAMES field 76
SESS TYPE field 33, 42
SESS. ID field 83
SESSION DATE/TIME OR SESSION MSGID field 33
Session manager 7
SESSION RESTRT field 83
SESSION.RETRY.INTERVAL field 21
SHORT TEXT field
Last Message screen 94
Message Display screen 92
Shortcut keys 10
Shutdown command 31, 47
Shutdown Immediate (I) command 34, 47
Shutdown Interface - Immediate (I) option 28
Shutdown Interface - Normal (S) option 28
Shutdown normal (S) command 34
SHUTIMM ADMIN REQUEST field 34
SHUTNORM ADMIN REQUEST field 34
SIDE field 82
Signing off 57
Signing on 51
Signon
automatic 52
defaults
entry fields 56
screen 55
SD option 55
system fields 56
multiple terminal 54
resignon 52
screen 51
user 52
Signon Defaults (S) option 15
Signon Defaults (SD) menu option 23
SIGNON DEFAULTS field 96
Signon Defaults screen 37
SIGNON field 96
SIGNON parameters 48
SIGNON REENTRY field 20
Signon security 53
SKIP.SIGNON.PANEL field 21
SLOW RESPONSE NOTIFICATION field 25

SN
multiple terminal signon 54
Primary Menu option 54
signon option 54
SN (Change Signon) menu option 23
SNODE ACCT DATA field 38, 56
SP (Select Process) menu option 23
SP option 54
SS (Select Statistics) menu option 23
SS option 54
START DATE field
Copy File Between Nodes 63
Select Statistics screen 87
Start first task command 34
Start Monitor (M) option 28
START TIME field
Copy File Between Nodes screen 64
Select Statistics screen 87
Startup 30
STATE field 83
Statistics 85
Status Alert Screen 53
STATUS field 42, 77, 82
STEP NAME field 82
STOP DATE field 87
STOP TIME field 88
STORAGE.SUBPOOL field 22
SUB STATE field 82
Submit Process
entry fields 70, 73
screen 69
security override
entry fields 73
security USERID 73
system fields 72
Submit Process (SB) menu option 23
SUBMIT PROCESS field 96
SUBMITTED CLASS field 83
SUBMITTER field 83, 90
SUBMITTER NODE field
Select Process - Operator Table 79
Select Statistics - Summary Table 90
Submitting a Process 66
Subtask management 30
SUPPRESS CONNECTION AT STARTUP field 24
SYMBOLIC PARAMETERS field 71
System configuration file 53

T

T (Free User and Terminate User's Signon) command 42
TCQ (Transmission Control Queue) 7, 49
TD CTR field 36, 43
TDEXIT parameter 48
TDLIMIT parameter 48
TIME field 9, 71
Trace files 49
Transient Data Counter (TD) 36, 43
Transmission Control Queue (TCQ) 7, 49
TTRN field 84
TYPE parameter 48

U

U (User Status) option 15
UPPER CASE PRINT field 38, 56
USER ID field 77
User Inquiry
screen 95
system fields 96
User profile 55
User Profile (Signon Defaults) data sets 50
User signon 52
User Status (U) option 15
User Status screen 41
Userid
CICS 52
Signon screen 52

USERID field 36, 42, 83

V

Virtual Telecommunications Access Method (VTAM) 7, 28, 31

VOLSER field 84

VOLUME SEQ NO field 83

VTAM BYTES field 84

W

W (Work queue display) command 34

W status 77

WA status 80, 82

WC status 77, 80, 82

WHO function 95

Work queue display (W) command 34

WORK TASK field 36

WORK.RETRY.INTERVAL field 22

Worker Subtask, see WST

WR status 80, 82

WS statius 80, 82

WST
- definition 18, 29
- setting maximum 25
- specifying inactive time 22

WT status 77, 80, 82

WX status 77, 80, 82